ajc architects

703 east 1700 south
salt lake city, utah
84105
ph: 801.466.8818
fx: 801.466.4411

UNIVERSITY OF UTAH
DUMKE GYMNASTICS TRAINING CENTER
REMODEL & ADDITION

1825 E. SOUTH CAMPUS DRIVE
SALT LAKE CITY, UT 84112

1877

10.18.21

CD

OWNER	UNIVERSITY OF UTAH, PLANNING DESIGN & CONSTRUCTION 1795 E. S. CAMPUS DR RM 201 Salt Lake City, UT 84112 PH #:801.581.3756 CONTACT: LORI KACZKA
CIVIL	TALISMAN CIVIL CONSULTANTS, LLC 5217 STATE ST. MURRAY, UT 84107 PH #:801.743.1308 CONTACT:RYAN CATHEY
STRUCTURAL	REAVELEY ENGINEERS 675 EAST 500 SOUTH, SUITE 400 Salt Lake City, UT 84102 PH #:801.505.4033 CONTACT:GRAHAM OXBORROW
MECHANICAL / PLUMBING	SPECTRUM ENGINEERS 324 S. STATE ST. SUITE 400 Salt lake City, UT 84111 PH #:801.401.8420 CONTACT:RYAN BOOGAARD
ELECTRICAL	SPECTRUM ENGINEERS 324 S. STATE ST. Suite 400 Salt Lake City, UT 84111 PH #:801.401.8490 CONTACT:LANCE KOBAYASHI

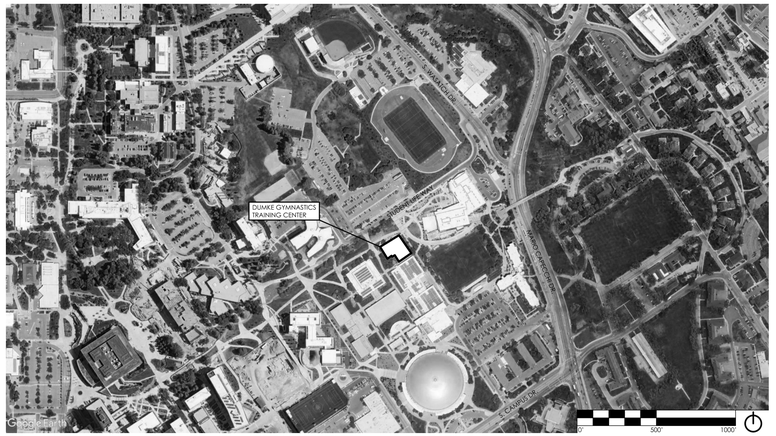

SITE LOCATION


ENTRY PERSPECTIVE

ARCHITECT 1877

ajc architects

703 east 1700 south
salt lake city, utah 84105
ph: 801.466.8818
fx: 801.466.4411
www.ajcarchitects.com

ARCHITECT / CONSULTANT

STATE OF UTAH
KENT R. RIGBY
No. 135096
05.18.2020
LICENSED ARCHITECT

OWNER INFORMATION

PROJECT DESCRIPTION

DUMKE GYMNASTICS TRAINING CENTER

1825 E. SOUTH CAMPUS DRIVE
SALT LAKE CITY, UT 84112

AHJ STAMP

SHEET NAME:

TITLE SHEET

REVISIONS

MARK	DATE	DESCRIPTION

ISSUE DATA

ISSUE DATE:	10.18.21
ISSUE TYPE:	CD
DRAWN BY:	AT|DG
CHECKED BY:	KR
PROJECT#:	1877

SHEET NUMBER:

G1001

10/18/2021 4:25:00 PM S:\ajc users\ataylor\Revit Local Files\21 0928 - 1877 - Dumke Womens Gymnastics Facility V20_detached_ataylorUV5V2.rvt

ALL IDEAS, DESIGNS, ARRANGEMENTS AND PLANS INDICATED OR REPRESENTED BY THIS DRAWING ARE OWNED BY AND THE PROPERTY OF AJC ARCHITECTS PC AND WERE CREATED, EVOLVED, AND DEVELOPED FOR USE ON AND IN CONNECTION WITH THE SPECIFIED PROJECT. NONE OF THE IDEAS, DESIGNS, ARRANGEMENTS OR PLANS SHALL BE USED BY OR DISCLOSED TO ANY PERSON, FIRM, OR CORPORATION FOR ANY PURPOSE WHATSOEVER WITHOUT WRITTEN CONSENT OF AJC ARCHITECTS PC. WRITTEN DIMENSIONS ON THESE DRAWINGS SHALL HAVE PRECEDENCE OVER SCALE DIMENSIONS. CONTRACTORS SHALL VERIFY AND BE RESPONSIBLE FOR ALL DIMENSIONS AND CONDITIONS ON THE JOB AND THIS OFFICE MUST BE NOTIFIED OF ANY VARIATION FROM THE DIMENSIONS AND CONDITIONS SHOWN BY THESE DRAWINGS. WARNING: REPRODUCTION HEREOF IS A CRIMINAL OFFENSE UNDER 18 U.S.C. SEC. 506. UNAUTHORIZED DISCLOSURE MAY CONSTITUTE TRADE SECRET MISAPPROPRIATION IN VIOLATION OF I.C.24-2-311 ET. SEQ. AND OTHER LAWS.

DRAWING INDEX:

GENERAL	
G1001	TITLE SHEET
GI002	DRAWING INDEX
GI003	GENERAL NOTES LEGENDS ABBREVIATIONS
GI004	ADA REQUIREMENTS
GI005	ADA REQUIREMENTS
CIVIL	
C000	GENERAL NOTES & LEGEND
C100	DEMOLITION PLAN
C200	SITE PLAN
C300	GRADING PLAN
C400	UTILITY PLAN
C401	UTILITY PLAN
C700	DETAILS
STRUCTURAL	
SE001	GENERAL NOTES
SE002	GENERAL NOTES
SE003	LEGENDS & ABBREVIATIONS
SB101	FOOTING AND FOUNDATION PLAN
SB201	WALL ELEVATIONS
SB501	TYPICAL FOOTING & FOUNDATION DETAILS
SB502	FOOTING AND FOUNDATION DETAILS
SB503	FOOTING AND FOUNDATION DETAILS
SB601	CONCRETE SCHEDULES
SB602	CONCRETE SCHEDULES
SB611	MASONRY SCHEDULES
SF101	FLOOR FRAMING PLAN
SF102	ROOF FRAMING PLAN
SF501	TYPICAL FLOOR FRAMING DETAILS
SF502	TYPICAL FLOOR FRAMING DETAILS
SF503	FLOOR FRAMING DETAILS
SF504	FLOOR FRAMING DETAILS
SF511	TYPICAL ROOF FRAMING DETAILS
SF512	TYPICAL ROOF FRAMING DETAILS
SF521	STAIR FRAMING PLAN AND DETAILS
SF601	TYPICAL STEEL FRAMING SCHEDULES
SF602	STEEL COLUMN SCHEDULES & DETAILS
SF603	STEEL DECK SCHEDULES
ARCHITECTURAL	
AS100	OVERALL SITE PLAN
AS101	ARCHITECTURAL SITE PLAN
ARCHITECTURAL	
AD001	DEMOLITION NOTES & REFERENCE PLAN - LEVEL 01
AD002	DEMOLITION REFERENCE PLAN - LEVEL 02
AD003	PARTIAL DEMOLITION PLAN - LEVEL 01
AD004	PARTIAL DEMOLITION PLAN - LEVEL 02
AD005	DEMOLITION ROOF PLAN
ARCHITECTURAL	
AE001.1	U OF U CODE ANALYSIS FORM
AE001.2	U OF U CODE ANALYSIS FORM
AE002	CODE SUMMARY
AE003	CODE PLAN - LEVEL 01
AE004	CODE PLAN - LEVEL 02
AE010	ASSEMBLIES - FLOOR, ROOF, CEILING
AE011	ASSEMBLIES - WALLS - EXT.
AE012	ASSEMBLIES - WALLS - INT.
AE013	UL LISTINGS
AE101	OVERALL FLOOR PLAN - LEVEL 01
AE102	OVERALL FLOOR PLAN - LEVEL 02
AE103	PARTIAL ANNOTATED FLOOR PLAN - LEVEL 01
AE104	PARTIAL ANNOTATED FLOOR PLAN - LEVEL 02
AE104.1	PARTIAL ANNOTATED FLOOR PLAN - LEVEL 02 - ADD ALT #1
AE104.2	PARTIAL ANNOTATED FLOOR PLAN - LEVEL 02 - ADD ALT #2
AE104.3	PARTIAL ANNOTATED FLOOR PLAN - LEVEL 02 - ADD ALT #3
AE105	PARTIAL DIMENSION PLAN - LEVEL 01
AE106	PARTIAL DIMENSION PLAN - LEVEL 02
AE107	PARTIAL FINISH PLAN - LEVEL 01
AE108	PARTIAL FINISH PLAN - LEVEL 02
AE120	OVERALL REFLECTED CEILING PLAN - LEVEL 01
AE121	OVERALL REFLECTED CEILING PLAN - LEVEL 02
AE122	PARTIAL REFLECTED CEILING PLAN - LEVEL 01
AE123	PARTIAL REFLECTED CEILING PLAN - LEVEL 02
AE130	OVERALL ROOF PLAN
AE131	PARTIAL ROOF PLAN
AE200	ELEVATIONS
AE201	ELEVATIONS
AE300	BUILDING SECTIONS
AE301	BUILDING SECTIONS
AE302	BUILDING SECTIONS
AE303	BUILDING SECTIONS
AE310	WALL SECTIONS
AE311	WALL SECTIONS
AE312	WALL SECTIONS
AE400	ENLARGED VERTICAL CIRCULATION
AE401	ENLARGED PLANS & INTERIOR ELEVATIONS
AE402	ENLARGED PLANS & INTERIOR ELEVATIONS
AE403	ENLARGED PLAN
AE404	ENLARGED PLANS & INTERIOR ELEVATIONS
AE410	INTERIOR ELEVATIONS
AE411	INTERIOR ELEVATIONS
AE412	INTERIOR ELEVATIONS
AE413	INTERIOR ELEVATIONS
AE414	INTERIOR ELEVATIONS
AE415	INTERIOR ELEVATIONS
AE416	INTERIOR ELEVATIONS
AE500	DETAILS
AE501	DETAILS
AE510	CEILING DETAILS
AE511	CEILING DETAILS
AE520	ROOF DETAILS
AE530	WALL DETAILS
AE540	STAIR & RAILING DETAILS
AE550	CASEWORK DETAILS
AE551	CASEWORK DETAILS
AE552	LOCKER DETAILS
AE560	FINISH DETAILS
AE570	DOOR DETAILS
AE580	EXTERIOR WINDOW DETAILS
AE581	INTERIOR WINDOW DETAILS
AE601	DOOR SCHEDULE & LEGEND
AE610	WINDOW TYPES
AE620	FINISH & ACCESSORY SCHEDULE
AE700	SIGNAGE DETAILS
MECHANICAL	
ME001	MECHANICAL COVER SHEET
ME501	MECHANICAL DETAILS
ME502	MECHANICAL DETAILS
ME601	MECHANICAL SCHEDULES
MD101	LEVEL 1 MECHANICAL DEMOLITION PLAN
MD102	LEVEL 2 MECHANICAL DEMOLITION PLAN
MD103	ROOF MECHANICAL DEMOLITION PLAN
MH101	LEVEL 1 MECHANICAL PLAN
MH102	LEVEL 2 MECHANICAL PLAN
MH103	ROOF MECHANICAL PLAN
PLUMBING	
PE001	PLUMBING COVER SHEET
PE501	PLUMBING DETAILS
PE601	PLUMBING SCHEDULES
PD100	OVERALL PLUMBING DEMOLITION PLAN
PD101	LEVEL 1 PLUMBING DEMOLITION PLAN
PD102	LEVEL 2 PLUMBING DEMOLITION PLAN
PD103	ROOF PLUMBING DEMOLITION PLAN
PL100	OVERALL PLUMBING PLAN
PL101	LEVEL 1 PLUMBING PLAN - WATER
PL102	LEVEL 2 PLUMBING PLAN - WATER
PL104	LEVEL 1 PLUMBING PLAN - DWV
PL105	LEVEL 2 PLUMBING PLAN - DWV
PL106	ROOF PLUMBING PLAN - DWV
ELECTRICAL	
EE001	SHEET INDEX, ABBREVIATIONS, AND GENERAL NOTES
EE002	SYMBOLS LEGEND
EE501	ELECTRICAL DETAILS
EE701	TYPICAL MOUNTING HEIGHT DETAILS
EE702	TYPICAL DETAILS
EE703	TYPICAL LABELING DETAILS
ED101	LEVEL 1 FLOOR DEMO PLAN
ED102	LEVEL 2 FLOOR DEMO PLAN
ED104	LEVEL 1 RCP DEMO PLAN
ED105	ENLARGED LEVEL 1 RCP DEMO PLAN
ED106	LEVEL 2 RCP DEMO PLAN
EP101	LEVEL 1 POWER PLAN
EP102	LEVEL 2 POWER PLAN
EP102.1	LEVEL 2 POWER PLAN ADD ALTERNATE #1
EP103	ROOF POWER PLAN
EP601	ONE-LINE DIAGRAM
EP602	ELECTRICAL SCHEDULES
EP603	PANEL SCHEDULES & AIC CALCS & RISERS
EP604	PANEL SCHEDULES
EL101	LEVEL 1 LIGHTING PLAN
EL102	LEVEL 2 LIGHTING PLAN
EL102.1	LEVEL 2 LIGHTING PLAN ADD ALTERNATE #1
EL401	LIGHTING SECTIONS
EL601	INTERIOR LIGHTING FIXTURE SCHEDULE
EL602	EXTERIOR LIGHTING FIXTURE SCHEDULE
EL603	NETWORK LIGHTING CONTROL DIAGRAM & RISERS
EL604	LIGHTING CONTROL SCHEDULES
EL605	LIGHTING CONTROL SCHEDULES
ET001	TELECOM SCHEDULE AND NOTES
ET101	LEVEL 1 TELECOMMUNICATIONS FLOOR PLAN
ET102	LEVEL 2 TELECOMMUNICATIONS FLOOR PLAN
ET102.1	LEVEL 2 TELECOM FLOOR PLAN ADD ALTERNATE #1
ET401	ENLARGED TELECOM PLANS & RACK ELEVATION
ET501	TELECOM DETAILS
ET502	TELECOM DETAILS
ET601	CONDUIT & TELECOM RISER DIAGRAMS
EY101	LEVEL 1 AUXILIARY PLAN
EY102	LEVEL 2 AUXILIARY PLAN
EY102.1	LEVEL 2 AUXILIARY PLAN ADD ALTERNATE #1
EY501	AUXILIARY DETAILS
EY601	AUXILIARY RISER DIAGRAMS
FA101	LEVEL 1 FIRE ALARM PLAN
FA102	LEVEL 2 FIRE ALARM PLAN
FA102.1	LEVEL 2 FIRE ALARM PLAN ADD ALTERNATE #1
FA103	ROOF FIRE ALARM PLAN
FA601	FIRE ALARM RISER

ARCHITECT 1877

ajc architects

703 east 1700 south
salt lake city, utah 84105
ph: 801.466.8818
fx: 801.466.4411
www.ajcarchitects.com

ARCHITECT / CONSULTANT

STATE OF UTAH
KENT B. RIGBY
No. 135096
05.18.2020
LICENSED ARCHITECT

OWNER INFORMATION

PROJECT DESCRIPTION

DUMKE GYMNASTICS TRAINING CENTER

1825 E. SOUTH CAMPUS DRIVE
SALT LAKE CITY, UT 84112

AHJ STAMP

SHEET NAME:

DRAWING INDEX

REVISIONS

MARK	DATE	DESCRIPTION

ISSUE DATA

ISSUE DATE:	10.18.21
ISSUE TYPE:	CD
DRAWN BY:	AT|DG
CHECKED BY:	KR
PROJECT#:	1877

SHEET NUMBER:

GI002

ALL IDEAS, DESIGNS, ARRANGEMENTS AND PLANS INDICATED OR REPRESENTED BY THIS DRAWING ARE OWNED BY AND THE PROPERTY OF AJC ARCHITECTS PC AND WERE CREATED, EVOLVED, AND DEVELOPED FOR USE ON AND IN CONNECTION WITH THE SPECIFIED PROJECT. NONE OF THE IDEAS, DESIGNS, ARRANGEMENTS OR PLANS SHALL BE USED BY OR DISCLOSED TO ANY PERSON, FIRM, OR CORPORATION FOR ANY PURPOSE WHATSOEVER WITHOUT WRITTEN CONSENT OF AJC ARCHITECTS PC. WRITTEN DIMENSIONS ON THESE DRAWINGS SHALL HAVE PRECEDENCE OVER SCALE DIMENSIONS. CONTRACTORS SHALL VERIFY AND BE RESPONSIBLE FOR ALL DIMENSIONS AND CONDITIONS ON THE JOB AND THE OFFICE MUST BE NOTIFIED OF ANY VARIATION FROM THE DIMENSIONS AND CONDITIONS SHOWN BY THESE DRAWINGS. WARNING: REPRODUCTION OR USE OF ANY DRAWING, DESIGN, ARRANGEMENT OR PLAN WITHOUT THE WRITTEN PERMISSION OF AJC ARCHITECTS PC IS A VIOLATION OF APPLICABLE STATE AND FEDERAL COPYRIGHT LAWS. ANY VIOLATION WILL BE STRICTLY PROSECUTED TO THE FULLEST EXTENT OF THE LAW. ANY PERSON OR ENTITY VIOLATING THESE RESTRICTIONS AGREES TO PAY ALL COSTS, EXPENSES AND ATTORNEY'S FEES INCURRED BY AJC ARCHITECTS PC IN ENFORCING THESE RESTRICTIONS.

10/18/2021 4:25:04 PM S:\ajc users\ataylor\Revit Local Files\21 0928 - 1877 - Dumke Womens Gymnastics Facility V20_detached_ataylorUV5V2.rvt

ALL IDEAS, DESIGNS, ARRANGEMENTS OR PLANS INDICATED OR REPRESENTED BY THIS DRAWING ARE OWNED BY AND THE PROPERTY OF AJC ARCHITECTS PC AND WERE CREATED, EVOLVED, AND DEVELOPED FOR USE ON AND IN CONNECTION WITH THE SPECIFIED PROJECT. NONE OF THE IDEAS, DESIGNS, ARRANGEMENTS OR PLANS SHALL BE USED BY OR DISCLOSED TO ANY PERSON, FIRM, OR CORPORATION FOR ANY PURPOSE WHATSOEVER WITHOUT WRITTEN CONSENT OF AJC ARCHITECTS PC. WRITTEN DIMENSIONS ON THESE DRAWINGS SHALL HAVE PRECEDENCE OVER SCALE DIMENSIONS. CONTRACTORS SHALL VERIFY AND BE RESPONSIBLE FOR ALL DIMENSIONS AND CONDITIONS ON THE JOB AND THIS OFFICE MUST BE NOTIFIED OF ANY VARIATION FROM THE DIMENSIONS AND CONDITIONS SHOWN BY THESE DRAWINGS. WARNING: REPRODUCTION HEREOF IS A CRIMINAL OFFENSE UNDER 18 U.S.C. SEC. 506. UNAUTHORIZED DISCLOSURE MAY CONSTITUTE TRADE SECRET MISAPPROPRIATION IN VIOLATION OF I.C.24-2-3-1 ET. SEQ. AND OTHER LAWS.

1 2 3 4 5

ABBREVIATIONS

ABBREV	ABBREVIATION (S)
ABB	ABBREVIATION (S)
A.F.F.	ABOVE FINISHED FLOOR
AD	ACCESS DOOR
ACOUS	ACOUSTICAL
A/C	AIR CONDITIONING
ALUM	ALUMINUM
AB	ANCHOR BOLT
APPR	APPROVED
AC	ASPHALT CONCRETE
BM	BEAM
BLK	BLOCK
BD	BOARD
BOT	BOTTOM
B.O.B.	BOTTOM OF BEAM
BLDG	BUILDING
CLG	CEILING
CH	CEILING HEIGHT
CEM	CEMENT
C/C	CENTER TO CENTER
CER	CERAMIC
CLR	CLEAR
CLOS	CLOSET
COL	COLUMN
COMPO	COMPOSITION
CONC	CONCRETE
CMU	CONCRETE MASONRY UNIT
CONN	CONNECTION
CONT	CONTINUOUS
CORD	COORDINATE
CORR	CORRIDOR
CSK	COUNTERSINK
DEL	DELETE
DET	DETAIL
DIAG	DIAGONAL
DIA	DIAMETER
DIM	DIMENSION
DIR	DIRECTION
DR	DOOR
DO	DOOR OPENING
DBL	DOUBLE
DF	DOUGLAS FIR
DN	DOWN
DS	DOWNSPOUT
DWG	DRAWING
DF	DRINKING FOUNTAIN
EA	EACH
EWC	ELECTRIC WATER COOLER
ELEC	ELECTRICAL
ELEV OR EL	ELEVATION
ELEV	ELEVATOR
EQ	EQUAL
EQUIP	EQUIPMENT
EXIST	EXISTING
EJ	EXPANSION JOINT
EXT	EXTERIOR
FOC	FACE OF CONCRETE
FOS	FACE OF STUD
FOW	FACE OF WALL
FT	FEET
FRP	FIBER REINFORCED PLASTIC
FIN	FINISH
FF	FINISH FLOOR
FO	FINISHED OPENING
FHC	FIRE HOSE CABINET
FLR	FLOOR
FD	FLOOR DRAIN
FS	FLOOR SINK
FDN	FOUNDATION
FH	FULL HEIGHT
FS	FULL SIZE
FSD	FULL SIZE DETAIL
GALV OR GV	GALVANIZED
GA	GAUGE
GC	GENERAL CONTRACTOR
GL	GLASS
GFRC	GLASS FIBER REINFORCED CONCRETE
GR	GRADE
GYP. BD.	GYPSUM BOARD
HDWD	HARDWOOD
H	HIGH
HP	HIGH POINT
HM	HOLLOW METAL
HORIZ	HORIZONTAL
ID	INSIDE DIAMETER
INSUL	INSULATION
INT	INTERIOR
JAN	JANITOR
LAV	LAVATORY
LEV	LEVEL
LTWT	LIGHT WEIGHT

LTG	LIGHTING
MAINT	MAINTENANCE
MFG	MANUFACTURER
MO	MASONRY OPENING
MAT'L	MATERIAL
MAX	MAXIMUM
MECH	MECHANICAL
MB	MECHANICAL BOLT
MET	METAL
MEZZ	MEZZANINE
MIN	MINIMUM
MISC	MISCELLANEOUS
MULL	MULLION
(N)	NEW
NR	NON-RATED
N.I.C.	NOT IN CONTRACT
N.T.S.	NOT TO SCALE
NO.	NUMBER
OFF	OFFICE
OC	ON CENTER
OPN'G	OPENING
OCC	OPERATOR CONTROL CENTER
OPP	OPPOSITE
OH	OPPOSITE HAND
OD	OUTSIDE DIAMETER
OF	OVERFLOW
OFI	OWNER FURNISH ITEM
OFOI	OWNER FURNISHED OWNER INSTALLED
PR	PAIR
PLAS	PLASTIC
PL	PLATE
PLWD	PLYWOOD
PC	PORTLAND CEMENT
PREP	PREPARATION
PT	PRESSURE TREATED
PTDF	PRESSURE TREATED DOUGLAS FIR
PROJ	PROJECTION
QT	QUARRY TILE
REF	FREFERENCE
R OR RAD	RADIUS
REDW'D	REDWOOD
REFL	REFLECTED
REINF	REINFORCE
REQ'D	REQUIRED
RES	RESILIENT
RR	RESTROOM(S)
R	RISER
RD	ROOF DRAIN
RTU	ROOF TOP UNIT
RM	ROOM
R.O.	ROUGH OPENING
SECT	SECTION
SHT	SHEET
SIM	SIMILAR
SPECS	SPECIFICATIONS
SQ	SQUARE
SS	STAINLESS STEEL
STD	STANDARD
STA	STATION
STL	STEEL
STG	STORAGE
STRUCT	STRUCTURAL
SIMUL	SUMULATED
SUSP	SUSPENDED
SYM	SYMMETRICAL
TEL	TELEPHONE
TEMP	TEMPERED
THK	THICK
T&G	TONGUE & GROOVE
TBC	TOP BACK OF CURB
T.O.C.	TOP OF CONCRETE OR CURB
T.O.F	TOP OF FOOTING
T.O.P.	TOP OF PARAPET
T.O.S.	TOP OF STEEL
T.O.W.	TOP OF WALL
TDC	TRAFFIC DECK COVERING
T	TREAD
TYP	TYPICAL
UNO	UNLESS NOTED OTHERWISE
V.I.F.	VERIFY IN FIELD
VER	VERTICAL
WC	WATER CLOSET
WL	WATER LEVEL
WP	WATERPROOFING
W	WIDE
W/	WITH
WD	WOOD
WP	WORKING POINT
WI	WROUGHT IRON

DIMENSIONING LEGEND

NEW CONSTRUCTION

ALL NEW CONSTRUCTION IS SHOWN HATCHED & SHADED AS ILLUSTRATED BELOW.
ALL NEW CONSTRUCTION IS FULLY NOTED AS SHOWN BELOW.
ALL WORK IS NEW UNLESS LABELED "EXISTING"

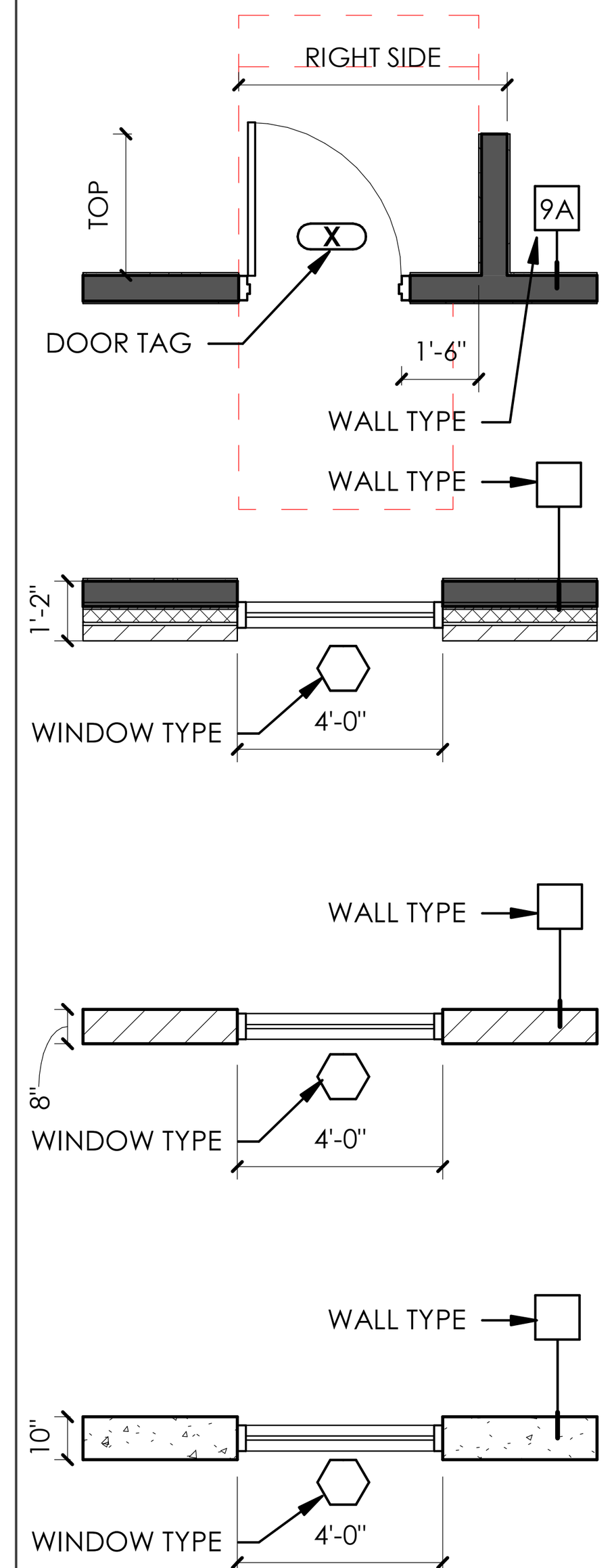

METAL OR WOOD STUD FRAMED WALL
- WALL TYPE DESIGNATES WIDTH OF WALL
- WIDTH OF WALL DIMENSIONED ONLY AT 1/4"=1' OR LARGER SCALE
- DOORS DIMENSIONED TO WIDTH OF NOMINAL OPENING
- WINDOWS DIMENSIONED TO NOMINAL FRAME SIZE - NOT ROUGH OPENING.

METAL OR WOOD STUD FRAMED WALL W/ MASONRY OR STONE VENEER
- WIDTH OF WALL DIMENSIONED FROM FACE OF MASONRY.
- WIDTH OF MASONRY WALL SIMENSIONED FROM FACE OF STUD.
- DOORS DIMENSIONED TO WIDTH OF NOMINAL OPENING.
- WINDOWS DIMENSIONED TO NOMINAL FRAME SIZE - NOT ROUGH OPENING.

MASONRY WALL
- WIDTH OF WALL DIMENSIONED TO NOMINAL SIZE.
- DOORS DIMENSIONED TO CENTERLINE OF NOMINAL OPENING.
- WINDOWS DIMENSIONED TO NOMINAL FRAME SIZE - NOT MASONRY OPENING.

CONCRETE WALL
- ACTUAL WIDTH OF WALL DIMENSIONED
- DOORS DIMENSIONED TO CENTERLINE OF NOMINAL OPENING.
- WINDOWS DIMENSIONED TO NOMINAL FRAME SIZE - NOT ROUGH OPENING.

NEW CONSTRUCTION AT EXISTING

NEW CONSTRUCTION SHOWN HATCHED W/ THICKER LINE.
ALL EXISTING COMPONENTS SHOWN THIN LINE SOLID, NO HATCH.

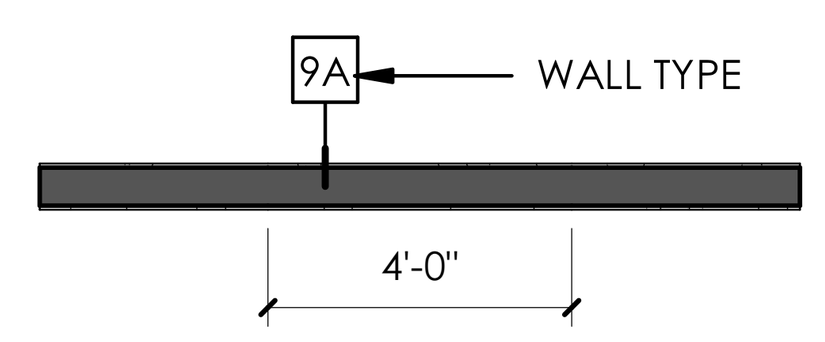

EXISTING CONDITIONS

ALL EXISTING CONSTRUCTION IS SHOWN WITHOUT HATCH AS ILLUSTRATED BELOW.
ALL EXISTING CONSTRUCTION IS LABELED "EXISTING" BY KEYNOTE OR OTHERWISE.
ALL DIMENSIONS TO EXISTING ARE APPROXIMATE ONLY AND ARE TO BE FIELD VERIFIED BY THE CONTRACTOR.

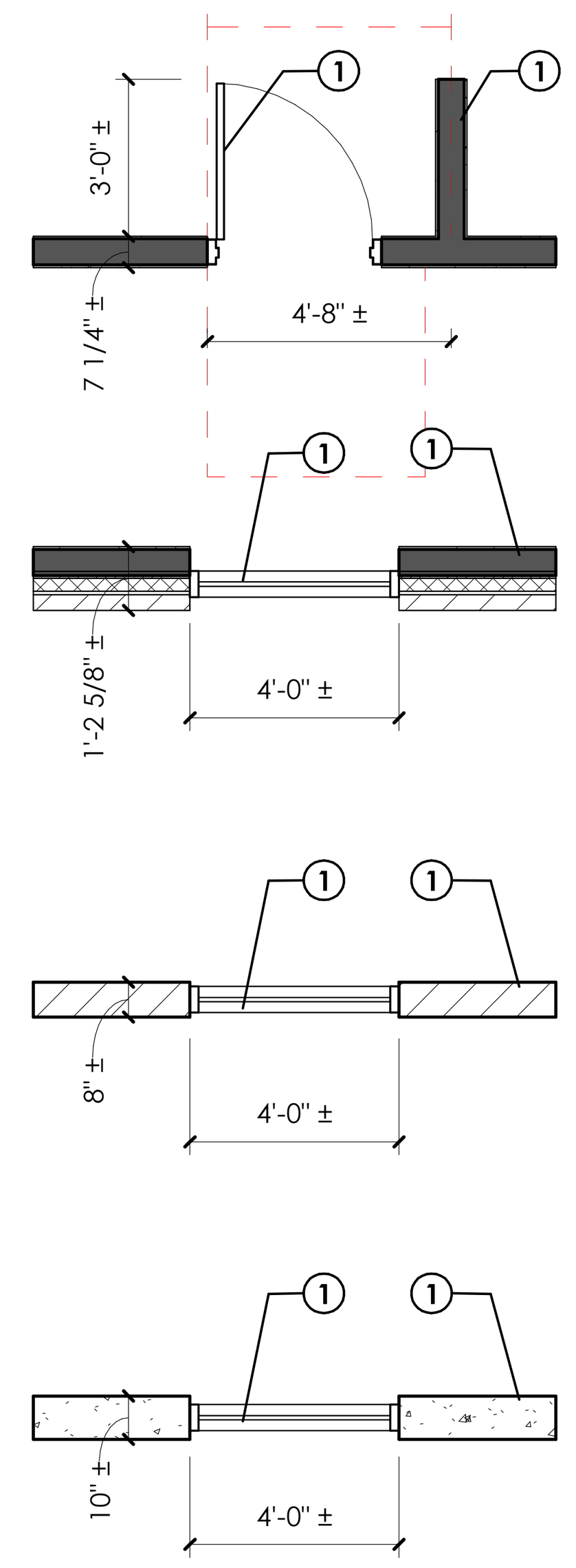

EXISTING
METAL OR WOOD STUD FRAMED WALL.
- WIDTH OF WALL DIMENSIONED TO FINISHED FACE.
- DOORS DIMENSIONED TO NOMINAL DOOR SIZE EXCLUDING FRAME.
- WINDOWS DIMENSIONED TO NOMINAL FRAME SIZE.

EXISTING
METAL OR WOOD STUD FRAMED WALL W/ MASONRY OR STONE VENEER
- WIDTH OF WALL DIMENSIONED FROM FINISHED FACE TO OVERALL NOMINAL WIDTH.
- DOORS DIMENSIONED TO NOMINAL DOOR SIZE EXCLUDING FRAME.
- WINDOWS DIMENSIONED TO NOMINAL FRAME SIZE.

EXISTING
MASONRY WALL (TO REMAIN)
- WIDTH OF WALL DIMENSIONED TO NOMINAL SIZE.
- DOORS DIMENSIONED TO NOMINAL DOOR SIZE EXCLUDING FRAME.
- WINDOWS DIMENSIONED TO NOMINAL FRAME SIZE.

EXISTING
CONCRETE WALL (TO REMAIN)
- NOMINAL WIDTH OF WALL DIMENSIONED.
- DOORS DIMENSIONED TO NOMINAL DOOR SIZE EXCLUDING FRAME.
- WINDOWS DIMENSIONED TO NOMINAL FRAME SIZE.

DEMOLITION AT EXISTING

ALL EXISTING COMPONENTS SHOWN THIN LINE SOLID, NO HATCH.
ALL COMPONENTS TO BE DEMOLISHED ARE SHOWN DASHED, THICK LINE.

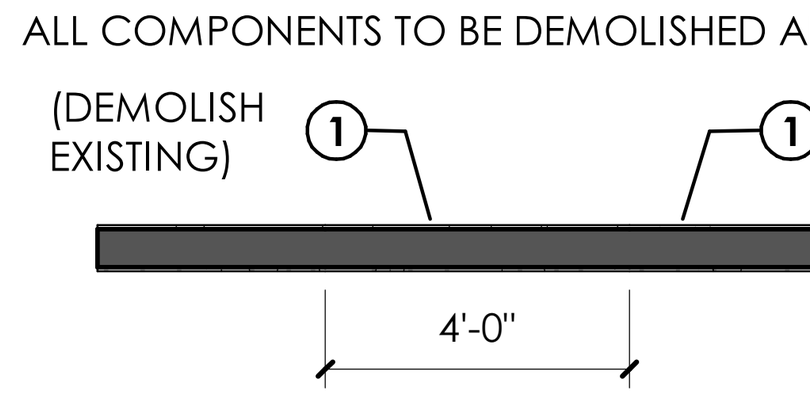

SYMBOLS

- ℄ CENTER LINE
- # NUMBER
- ° DEGREE
- & AND
- @ AT
- WORK POINT OR ELEV. BENCH MARK
- Ø DIAMETER OR ROUND
- NORTH ARROW
- (AA) GRID HEAD

DETAIL TAGS

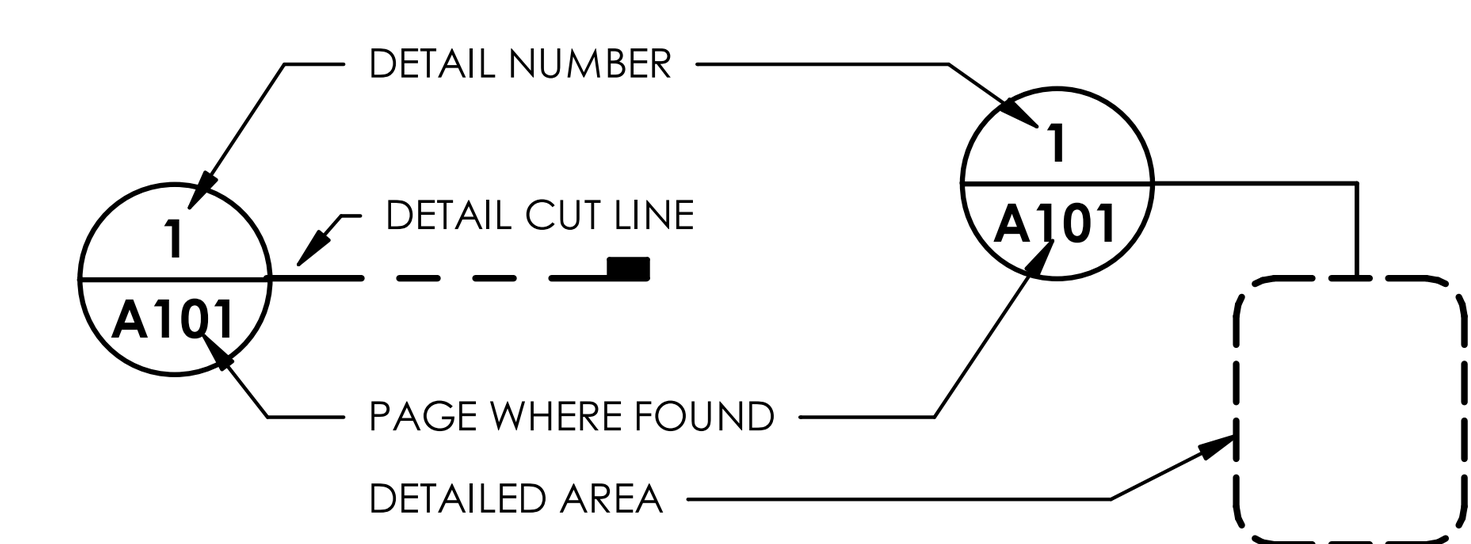

WALL SECTION TAG

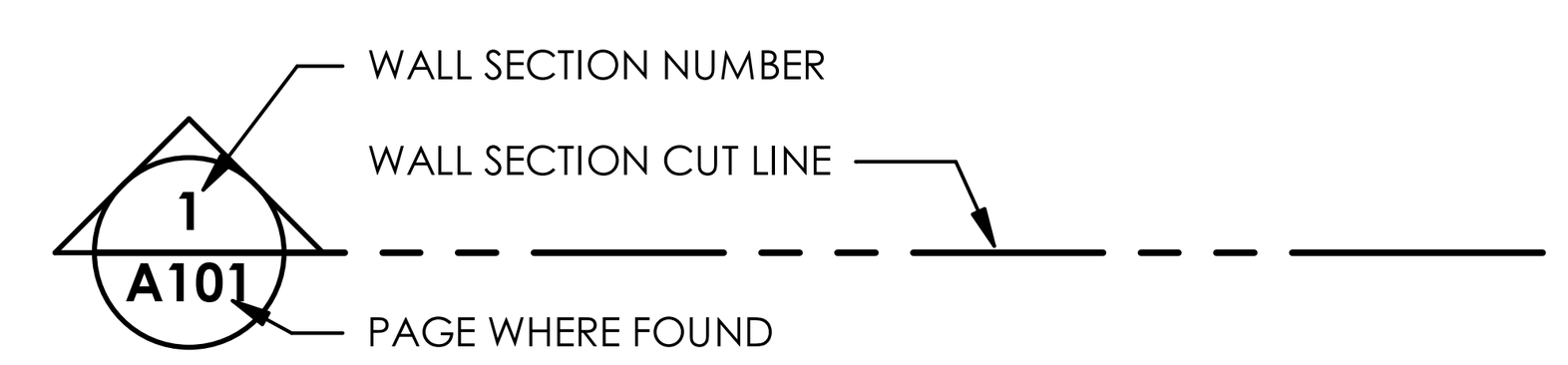

BUILDING SECTION TAG

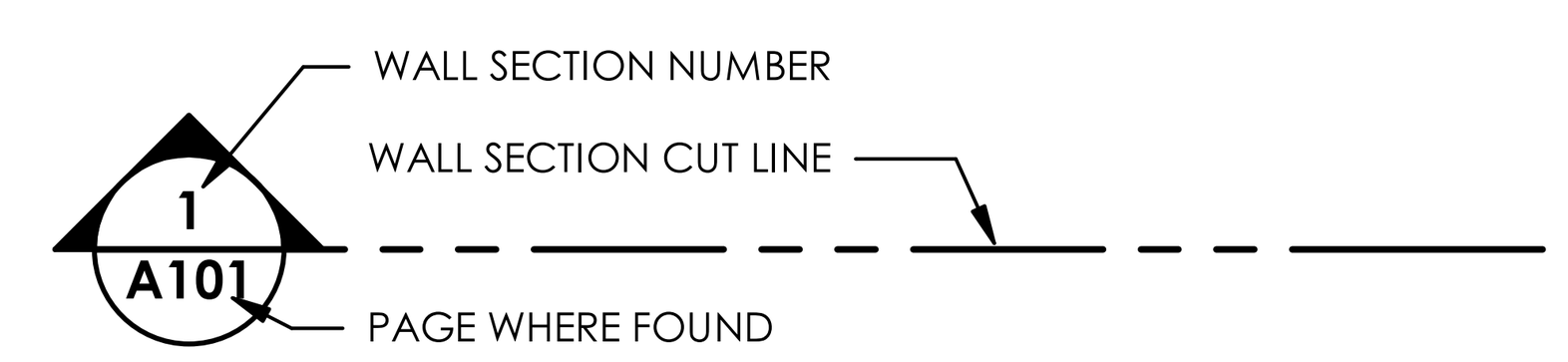

DRAWING TITLE

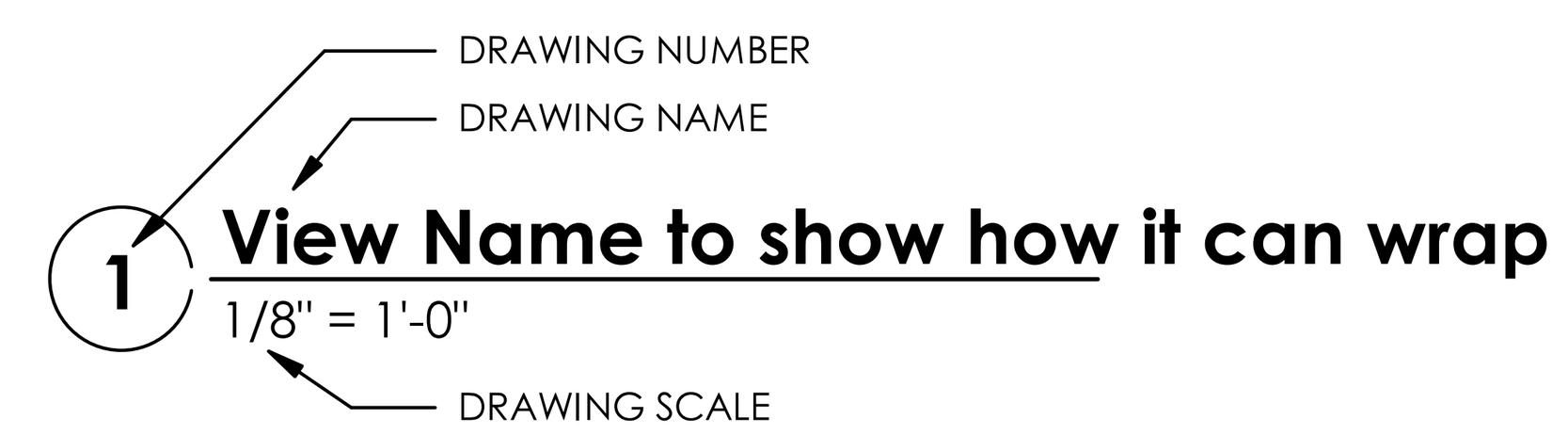

ELEVATION TAGS

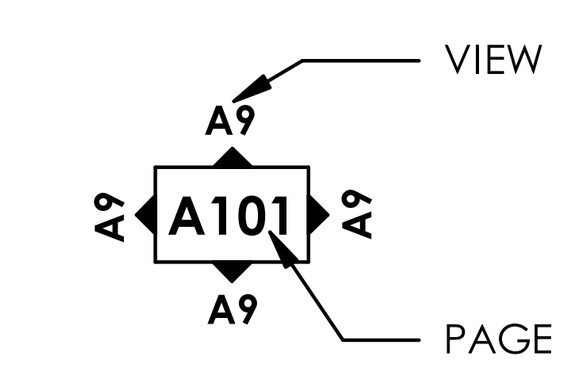

ROOM FINISH TAG

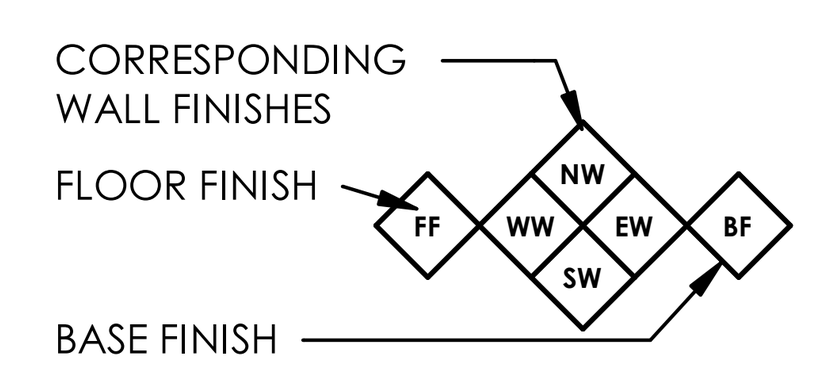

MISCELLANEOUS KEYED NOTE SYMBOLS

- (AA) WINDOW/CURTAIN WALL DESIGNATION. SEE WINDOW SCHEDULE.
- (?) KEYNOTE.
- GLAZING MODIFIER
- GLAZING DESIGNATION.
- (101) DOOR DESIGNATION. SEE DOOR SCHEDULE
- [A1] WALL, FLOOR, CEILING, ROOF TYPE DESIGNATION. SEE APPROPRIATE TYPE SHEETS.
- ◇ WALL, FLOOR, BASE, CEILING FINISH TAG. THIS SYMBOL WHEN ATTACHED TO A WALL SHALL INDICATE THIS FINISH FOR ENTIRE LENGTH OF WALL FROM ONE INTERSECTION TO THE NEXT AND NOT BE TERMINATED BY WINDOWS OR DOORS UNO.

ROOM NAME TAG

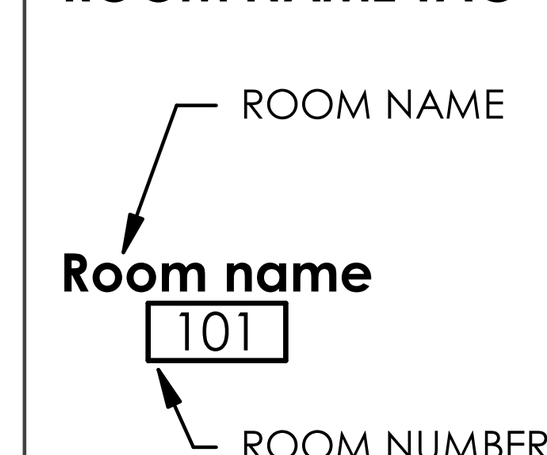

REVISION CLOUD & TAG

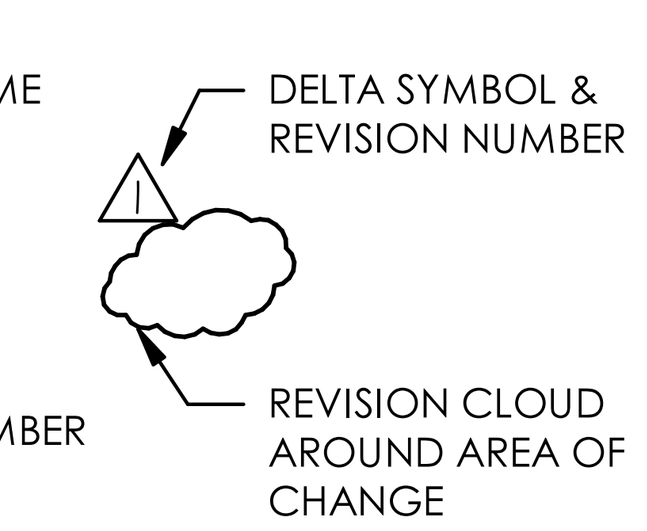

DATUM TAG

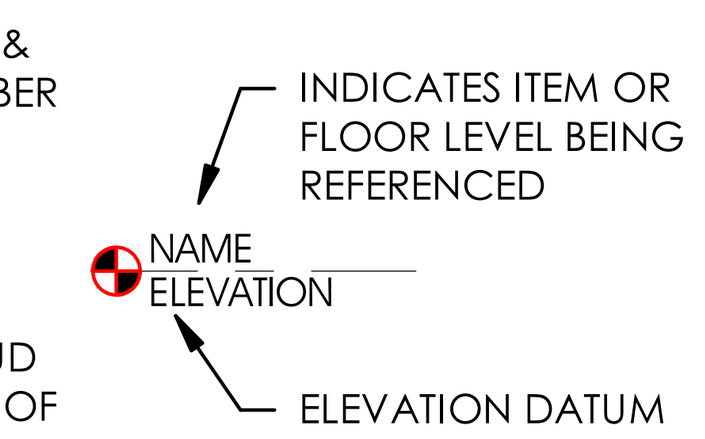

SECTION MATERIALS LEGEND



GENERAL NOTES:

1 THE GENERAL CONTRACTOR / CONSTRUCTION MANAGER (CM/GC) SHALL HEREAFTER BE REFERRED TO AS "GENERAL CONTRACTOR" OR "GC". THE OWNER MAY HEREAFTER BE REFERRED TO AS "OWNER".

2 PLEASE NOTE:THE GENERAL CONTRACTOR IS RESPONSIBLE FOR ALL WORK REGARDLESS OF THE LOCATION OF THE INFORMATION IN THE DOCUMENTS. THE GENERAL CONTRACTOR SHALL UTILIZE THE CONSTRUCTION DRAWINGS AND WRITTEN SPECIFICATIONS FOR ALL REQUIRED INFORMATION TO PROVIDE COMPLETE CONSTRUCTION OF THIS PROJECT. ITEMS LISTED IN DRAWINGS MAY NOT BE INCLUDED IN SPECIFICATIONS. ITEMS LISTED IN SPECIFICATIONS MAY NOT BE INCLUDED IN DRAWINGS.

3 UNLESS OTHERWISE INDICATED IN THE CONSTRUCTION DOCUMENTS AS BEING NOT IN CONTRACT (N.I.C.) OR EXISTING, ALL ITEMS, MATERIALS AND INSTALLATION OF SAME ARE PART OF THE CONTRACT AS DEFINED BY THE CONSTRUCTION DOCUMENTS. THE GC SHALL PROVIDE AND INSTALL ALL ACCESSORIES, COMPONENTS AND ASSEMBLIES REQUIRED FOR THE WORK DEPICTED OR SPECIFIED.

4 THE GENERAL CONTRACTOR SHALL FIELD VERIFY ALL CONDITIONS AND DIMENSIONS PRIOR TO BEGINNING ANY WORK AND SHALL BE RESPONSIBLE FOR ALL WORK AND MATERIALS INCLUDING THOSE FURNISHED BY SUBCONTRACTORS. THE GC SHALL ACCEPT PREMISES AS FOUND. OWNER WILL MAINTAIN THE EXISTING CONDITION OF THE SITE AND EXISTING STRUCTURES AT THE TIME OF BIDDING.

5 DISCREPANCIES BETWEEN PORTIONS OF THE CONTRACT DOCUMENTS ARE NOT INTENDED. THE GENERAL CONTRACTOR IS TO CLARIFY WITH THE ARCHITECT ANY SUCH DISCREPANCIES PRIOR TO COMMENCING WORK.

6 DIMENSIONS TAKE PRECEDENCE OVER DRAWINGS: DO NOT SCALE DRAWINGS TO DETERMINE ANY LOCATIONS. THE ARCHITECT SHALL BE NOTIFIED OF ANY DISCREPANCY PRIOR TO CONTINUING WITH WORK.

7 ALL PLAN DIMENSIONS ARE FROM GRIDLINE OR FACE OF STUD OR FACE OF BLOCK UNLESS OTHERWISE INDICATED. SEE SECTION ON "DIMENSIONING" THIS SHEET.

8 THE CONTRACTOR SHALL REPORT TO THE ARCHITECT ALL CONDITIONS REQUIRING COORDINATION/ CHANGES WITH THE CONTRACT DOCUMENTS. COORDINATION / APPROVAL SHALL TAKE PLACE BEFORE THE WORK BEGINS. ALL CHANGES TO THE CONTRACT COST SHALL BE APPROVED THROUGH A CHANGE ORDER.

9 DETAILED DRAWINGS AND LARGER SCALE DRAWINGS TAKE PRECEDENCE OVER SMALL SCALE DRAWINGS.

10 THE ARCHITECT WILL REVIEW SHOP DRAWINGS AND SAMPLES FOR CONFORMANCE WITH DESIGN CONCEPT OF THE PROJECT. THE ARCHITECT'S REVIEW OF A SEPARATE ITEM SHALL NOT INDICATE APPROVAL OF AN ASSEMBLY IN WHICH THE ITEM FUNCTIONS. THE ARCHITECT WILL NOT REVIEW SHOP DRAWINGS UNTIL THE GC HAS REVIEWED AND STAMPED THE SHOP DRAWING/SUBMITTAL. THE GC IS RESPONSIBLE FOR FIELD VERIFYING ALL DIMENSIONS SHOWN ON THE SHOP DRAWINGS. THE ARCHITECT'S REVIEW OF THE SHOP DRAWINGS SHALL NOT OVERRIDE THE CONDITIONS DESCRIBED IN THE CONTRACT DOCUMENTS UNLESS SPECIFICALLY NOTED OTHERWISE BY THE ARCHITECT.

11 FOR CONSTRUCTION DETAILS NOT SHOWN, USE THE MANUFACTURER'S STANDARD DETAILS OR APPROVED SHOP DRAWINGS / DATA SHEETS IN ACCORDANCE WITH THE PROJECT SPECIFICATIONS.

12 FOR GRADING, TRENCHING ETC., CONTACT THE ARCHITECT FOR INSTRUCTIONS PRIOR TO THE CONTINUATION OF WORK SHOULD ANY UNUSUAL CONDITIONS BECOME APPARENT DURING GRADING OR FOUNDATION CONSTRUCTION. EXISTING ELEVATIONS AND LOCATIONS TO BE JOINED SHALL BE VERIFIED BY THE GENERAL CONTRACTOR BEFORE CONSTRUCTION.

13 ALL WORK, MATERIALS AND METHODS SHALL BE IN CONFORMANCE WITH THE CODES, ORDINANCES AND REGULATIONS OF ALL GOVERNMENTAL AGENCIES HAVING JURISDICTION AT THE PROJECT LOCATION. THE GENERAL CONTRACTOR MUST COMPLY WITH THE CONTRACTOR REGISTRATION REQUIREMENTS OF ALL GOVERNING AUTHORITIES.

14 ALL PROJECT CONSTRUCTION SHALL CONFORM WITH ANSI A-117.1-2009, AND THE AMERICANS WITH DISABILITIES ACT (ADA).

15 THE GENERAL CONTRACTOR SHALL NOTIFY ALL APPLICABLE LOCAL GOVERNING AUTHORITIES AND UTILITIES PRIOR TO COVERING UP ANY WORK REQUIRING INSPECTION.

16 THE GENERAL CONTRACTOR SHALL MAINTAIN ALL REQUIRED EXITS AND FIRE LANES IN WORKING ORDER.

17 A GENERAL BUILDING PERMIT IS NOT REQUIRED. UNIVERSITY OF UTAH HAS JURISDICTION. ALL OTHER PERMITS AND CONNECTION FEES SHALL BE SECURED BY THE GENERAL CONTRACTOR AND REIMBURSED THROUGH THE OWNER.

18 THE GENERAL CONTRACTOR SHALL PROVIDE AND INSTALL FIRE EXTINGUISHERS WHERE SHOWN ON PLAN.

19 MINIMUM FLAME SPREAD CLASSIFICATION OF INTERIOR FINISH SHALL CONFORM TO THE BUILDING CODE AND LOCAL GOVERNING BUILDING CODES/ORDINANCES. SEE CODE SHEET AE002.

20 THE GENERAL CONTRACTOR SHALL PROVIDE AND IS SOLELY RESPONSIBLE AND LIABLE FOR PUBLIC AND EMPLOYEE PROTECTION AS NECESSARY AND AS REQUIRED BY THE CODES, INCLUDING EXTERIOR AND INTERIOR PEDESTRIAN TRAFFIC BARRIERS. ALL WORK SHALL CONFORM TO THE ORDINANCES AND REGULATIONS OF GOVERNMENTAL AGENCIES HAVING JURISDICTION AT THE PROJECT.

21 THE GENERAL CONTRACTOR SHALL PROVIDE TEMPORARY BARRICADES FOR DUST AND NOISE CONTROL, AND ALL REQUIRED ENVIRONMENTAL PROTECTION WHERE WORK JOINS EXISTING CONDITIONS.

22 ALL DEBRIS SHALL BE REMOVED FROM PREMISES AND ALL AREAS SHALL BE LEFT IN A CLEAN (BROOM) CONDITION DAILY.

23 IT SHALL BE THE RESPONSIBILITY OF THE GENERAL CONTRACTOR TO COORDINATE AND OR CALL BLUE STAKES TO LOCATE ALL EXISTING UTILITIES, WHETHER SHOWN HEREIN OR NOT, AND WHEN IDENTIFIED TO PROTECT THEM FROM DAMAGE. THE GENERAL CONTRACTOR SHALL BEAR ALL EXPENSE OF REPAIR OR REPLACEMENT OF IDENTIFIED UTILITIES OR OTHER PROPERTY DAMAGED BY OPERATIONS IN CONJUNCTION WITH THE EXECUTION OF THE WORK.

24 APPROVED PLANS SHALL BE KEPT IN A PLAN BOX AND SHALL NOT BE USED BY WORKMEN. ALL CONSTRUCTION SETS SHALL REFLECT THE SAME INFORMATION. THE GENERAL CONTRACTOR SHALL ALSO MAINTAIN, IN GOOD CONDITION, ONE COMPLETE SET OF PLANS WITH ALL REVISIONS, ADDENDA AND CHANGE ORDERS, ON THE PREMISES AT ALL TIMES. THESE ARE TO BE KEPT UNDER THE CARE OF THE JOB SUPERINTENDENT.

25 THE GENERAL CONTRACTOR IS TO PROVIDE BLOCKING AS REQUIRED FOR MOUNTING OF WALL MOUNTED SHELVES, CABINETS, HC GRAB BARS AND PARTITION BRACES AND ALL OTHER ITEMS IDENTIFIED ON THE EQUIPMENT OR ACCESSORY SCHEDULE. BLOCKING SHALL BE FIRE TREATED WHERE REQUIRED BY THE BUILDING CODE.

26 THE GENERAL CONTRACTOR IS RESPONSIBLE FOR RECEIVING, UNLOADING, UNCRATING, INSTALLATION AND HOOK-UP OF ALL OWNER FURNISHED ITEMS UNLESS NOTED OTHERWISE ON THE DRAWINGS.

GENERAL NOTES:

27 THE GENERAL CONTRACTOR IS TO ASSURE THAT NO REBAR OR REINFORCEMENT IS PRESENT PRIOR TO CORE DRILLING OR PLACING BOLTS OR ANY OTHER ITEM WHICH COULD DISTURB THE STRUCTURAL SLAB OR FOUNDATION WALLS.

28 PROVIDE GALVANIC PROTECTION BETWEEN DISSIMILAR MATERIALS WHERE REQUIRED.

29 PROVIDE METAL TRIM OR CASING AT ALL EDGES OF PLASTER AND DRYWALL SURFACES WHERE IT TERMINATES OR MEETS ANY OTHER MATERIAL, UNLESS NOTED OTHERWISE.

30 PROVIDE METAL CORNER TRIM AT ALL OUTSIDE CORNERS OF PLASTER AND DRYWALL SURFACES.

31 ALL PENETRATIONS THROUGH ANY SURFACE SHALL BE THOROUGHLY SEALED WITH APPROPRIATE SEALANT MATERIAL.

32 UNLESS OTHERWISE NOTED, ALL NEW EXTERIOR AND INTERIOR METAL, TRIM, TREILLAGE, RAILINGS, MOLDINGS, FRAMES, CASTING ETC., SHALL BE PAINTED.

33 FOR PLUMBING, FIRE SPRINKLER AND ELECTRICAL SYSTEMS, PROVIDE APPROVED ASSEMBLIES WITH SELF CLOSING DEVICES FOR ANY PENETRATIONS IN RATED CONSTRUCTION.

34 THE GC SHALL VERIFY LOCATIONS OF ALL CEILING ACCESS PANELS WITH MECHANICAL, FIRE SPRINKLER AND PLUMBING PLANS. ACCESS PANELS SHALL BE FURNISHED AND INSTALLED WITH A FIRE RATING EQUAL TO THE WALL OR CEILING ASSEMBLY INTO WHICH THEY ARE TO BE INSTALLED. FINISH AND LOCATION SHALL BE APPROVED BY THE ARCHITECT.

35 THE GC SHALL VERIFY DIMENSIONS OF ALL EQUIPMENT PADS & BASES WITH EQUIPMENT MANUFACTURERS & SHALL VERIFY ALL SIZES AND LOCATIONS OF DUCT OPENINGS ON ROOF AND INTERIOR SHAFTS.

NOTES TO BIDDERS:

CONTRACTOR, SUBCONTRATOR, VENDOR OR ANY OTHER PERSON PARTICIPATING IN BIDDING THIS PROJECT SHALL BE RESPONSIBLE FOR INFORMATION CONTAINED IN ANY AND ALL SHEETS OF DRAWINGS AND SPECIFICATIONS.

FIELD VERIFY EXISTING CONDITIONS PRIOR TO START OF CONSTRUCTION.

ADD ALTERNATES:

ADD ALT. #1 - FINISH BUILD OUT OF LEVEL 02. SEE SHEET AE104.1
ADD ALT. #2 - EXTERIOR DECK. SEE SHEET AE104.2
ADD ALT. #3 - OBSERVATION AREA. SEE SHEET AE104.3
ADD ALT. #4 - SAUNA KIT. SEE SHEET AE103

SCOPE OF WORK:

RENNOVATION OF AND ADDITION TO THE CURRENT DUMKE GYMNASTICS TRAINING CENTER AT THE UNIVERSITY OF UTAH. THE WESTERN PORTION OF THE BUILDING WILL BE RENOVATED TO INCLUDE UPDATED LOCKER ROOM, LOUNGE AND TRAINING SPACE ON THE FIRST LEVEL. A SECOND LEVEL WILL BE ADDED ABOVE THE CURRENT AEROBICS SPACE AND HOUSE SOME OFFICES FOR THE GYMNASTICS STAFF. A LEGACY HALL WILL BE ADDED TO THE NORTHWEST PORTION OF THE BUILDING ALONG WITH AN ELEVATOR AND NEW STAIR. THE EXISTING PORTION OF THE BUILDING THAT HOUSES THE GYMNASIUM WILL REMAIN AS IS AND SHOULD BE PROTECTED DURING DEMOLITION AND CONSTRUCTION. THE EXTERIOR OF THE CURRENT BUILDING WILL MOSTLY REMAIN AS IS AND WILL NEED TO BE PROTECTED DURING DEMOLITION AND CONSTRUCTION.

DEFERRED SUBMITTALS:

1. BUILDING FIRE SPRINKLER WORK.
2. BUILDING FIRE ALARM SYSTEM WORK.
3. M.E.P. SEISMIC ANCHORING & BRACING.
4. CURTAIN WALL GLAZING DESIGN.
5. RAILING AND GLASS PANEL SYSTEM.
6. ICC-ESR - SEE SPEC. SECTION 075419 FOR CLARIFICATION.

I/WE UNDERSTAND THAT I/WE WILL NOT BE AUTHORIZED ANY INSPECTION OF THE DEFERRED ITEMS PROPOSED PRIOR TO THE SUBMITTAL AND APPROVAL OF PLANS AND/OR CALCULATIONS FOR THOSE DEFERRED ITEMS.

ARCHITECT 1877

ajc architects

703 east 1700 south
salt lake city, utah 84105
ph: 801.466.8818
fx: 801.466.4411
www.ajcarchitects.com

ARCHITECT / CONSULTANT

STATE OF UTAH
KENT R. RIGBY
No. 135096
05.18.2020
LICENSED ARCHITECT

OWNER INFORMATION

PROJECT DESCRIPTION

DUMKE GYMNASTICS TRAINING CENTER

1825 E. SOUTH CAMPUS DRIVE
SALT LAKE CITY, UT 84112

AHJ STAMP

SHEET NAME:

GENERAL NOTES
LEGENDS
ABBREVIATIONS

REVISIONS

MARK	DATE	DESCRIPTION

ISSUE DATA

ISSUE DATE:	10.18.21
ISSUE TYPE:	CD
DRAWN BY:	AT|DG
CHECKED BY:	KR
PROJECT#:	1877

SHEET NUMBER:

GI003

10/18/2021 4:25:06 PM S:\ajc users\taylor\Revit Local Files\21 0928 - 1877 - Dumke Womens Gymnastics Facility V20_detached_ataylorUV5V2.rvt

ALL IDEAS, DESIGNS, ARRANGEMENTS AND PLANS INDICATED OR REPRESENTED BY THIS DRAWING ARE OWNED BY AND THE PROPERTY OF AJC ARCHITECTS PC AND WERE CREATED, EVOLVED, AND DEVELOPED FOR USE ON AND IN CONNECTION WITH THE SPECIFIED PROJECT. NONE OF THE IDEAS, DESIGNS, ARRANGEMENTS OR PLANS INDICATED OR REPRESENTED BY THIS DRAWING OR THE DRAWINGS AND SPECIFICATIONS OF WHICH THEY ARE A PART, SHALL BE USED BY OR DISCLOSED TO ANY PERSON, FIRM, OR CORPORATION FOR ANY PURPOSE WHATSOEVER WITHOUT WRITTEN CONSENT OF AJC ARCHITECTS PC. WRITTEN DIMENSIONS ON THESE DRAWINGS SHALL HAVE PRECEDENCE OVER SCALE DIMENSIONS. CONTRACTORS SHALL VERIFY AND BE RESPONSIBLE FOR ALL DIMENSIONS AND CONDITIONS ON THE JOB AND THE OFFICE MUST BE NOTIFIED OF ANY VARIATION FROM THE DIMENSIONS AND CONDITIONS SHOWN BY THESE DRAWINGS. WARNING: REPRODUCTION HEREOF IS A CRIMINAL OFFENSE UNDER 18 U.S.C. SEC. 506. UNAUTHORIZED DISCLOSURE MAY CONSTITUTE TRADE SECRET MISAPPROPRIATION IN VIOLATION OF 12.24.2 31.1 ET. SEQ. AND OTHER LAWS.

1 2

A

(A) SIDE APPROACH — (B) FRONT APPROACH — (C) POCKET APPROACH — (D) STOP OR LATCH APPROACH

D

(E) HINGED DOOR — (F) SLIDING DOOR — (G) FOLDING DOOR — (H) CLEAR WIDTH OF AN ACCESSIBLE ROUTE

MANEUVERING CLEARANCES AT SLIDING, FOLDING DOORS, DOORWAYS AND CLEAR WIDTH AT DOORWAYS

(F) FRONT APPROACH, PULL SIDE — (G) FRONT APPROACH, PUSH SIDE — (H) FRONT APPROACH, PUSH SIDE, DOOR PROVIDED WITH BOTH CLOSER AND LATCH

C

(A) HINGE APPROACH, PUSH SIDE — (B) LATCH APPROACH, PULL SIDE — (C) LATCH APPROACH, PUSH SIDE — (D) HINGE APPROACH, PULL SIDE — (E) HINGE APPROACH, PULL SIDE

*IF BOTH CLOSER AND LATCH ARE PROVIDED.
**48" MIN. (1220) IF BOTH CLOSER AND LATCH PROVIDED.
*54" MIN. (1370) IF CLOSER IS PROVIDED
*48" MIN. (1220) IF CLOSER IS PROVIDED

MANEUVERING CLEARANCES AT MANUAL SWINGING DOORS

(A) — (B) — (C)

DOORS IN SERIES

B

(A) PULL SIDE — (B) PUSH SIDE — (C) PUSH SIDE, DOOR PROVIDED WITH BOTH CLOSER AND LATCH

MANEUVERING CLEARANCES

DOOR AND DOORWAY CLEARANCE REQUIREMENTS1

B1

A

LAVATORY SIDE VIEW DASHED LINE INDICATED DIMENSIONAL CLEARANCE OF UNDER FIXTURE ENCLOSURE, IF REQUIRED.

CHILDRENS LAVATORY SIDE VIEW DASHED LINE INDICATED DIMENSIONAL CLEARANCE OF UNDER FIXTURE ENCLOSURE, IF REQUIRED.

LAVATORY PLAN VIEW

CONTROLS & OPERATING MECHANISMS FORWARD REACH

LAVATORY ACCESSORY CLEARANCES

A1 1/4" = 1'-0"

3

(A) BATHTUBS WITH REMOVABLE IN-TUB SEATS — (A) BATHTUBS WITH PERMANENT SEATS

MOUNTING HEIGHTS FOR BATHTUBS

(A) BATHTUBS WITH REMOVABLE IN TUB SEAT — (A) BATHTUBS WITH PERMANENT SEAT

CLEARANCES FOR BATHTUBS

(A) WITHOUT SEAT — TRANSFER TYP SHOWER COMPARTMENT CONTROL LOCATION — BATHTUB CONTROL LOCATION

TUB & SHOWER CONTROL LOCATION

(B) WITH SEAT — (A) WITH SEAT (ELEVATION) — (B) WITHOUT SEAT (ELEVATION)

STANDARD ROLL-IN TYPE SHOWER COMPARTMENT CONTROL LOCATION

ALTERNATE ROLL-IN TYPE SHOWER COMPARTMENT CONTROL LOCATION

STANDARD ROLL-IN TYPE SHOWER COMPARTMENT SIZE AND CLEARANCE W/ GRAB BARS

ALTERNATE ROLL-IN TYPE SHOWER COMPARTMENT SIZE AND CLEARANCE W/ GRAB BARS

ROLL-IN TYPE SHOWER CLEARANCES

TRANSFER TYPE SHOWER COMPARTMENT SIZE AND CLEARANCE W/ GRAB BARS

L-SHAPED — RECTANGULAR

L-SHAPED AND RECTANGULAR SHOWER SEATS

TUB & SHOWER CLEARANCES

A3 1/4" = 1'-0"

4

	AGES 3 & 4	AGES 5 THRU 8	AGES 9 THRU 12
WATER CLOSET CENTERLINE	12 INCHES (305 MM)	12-15 INCHES (305-380 MM)	15-18 INCHES (380-455 MM)
TOILET SEAT HEIGHT	11 TO 12 INCHES (280 - 305 MM)	12-15 INCHES (305-380 MM)	15-17 INCHES (380-430 MM)
GRAB BAR HEIGHT	18 - 20 INCHES (455-510 MM)	20-25 INCHES (510-635 MM)	25-27 INCHES (635-685 MM)
DISPENSER HEIGHT	14 INCHES (355 MM)	14-17 INCHES (355-430 MM)	17-19 INCHES (430-485 MM)

(A) ADULT WALL HUNG WATER CLOSET — (B) ADULT FLOOR MOUNTED WATER CLOSET AND CHILDREN'S WATER CLOSET

SIZE OF WHEELCHAIR ACCESSIBLE TOILET COMPARTMENT

(A) ELEVATION ADULT — (B) ELEVATION CHILDREN — (C) PLAN

WHEELCHAIR ACCESSIBLE COMPARTMENT TOE CLEARANCE

CHILDRENS WATER CLOSET FRONT VIEW — CHILDRENS WATER CLOSET SIDE VIEW

WATER CLOSET FRONT VIEW — WATER CLOSET SIDE VIEW

ACCESSIBLE TOILET COMPARTMENT CLEARANCES AND MOUNTING HEIGHTS

WHEEL CHAIR ACCESSIBLE TOILET STALL PLAN VIEW

AMBULATORY ACCESSIBLE TOILET COMPARTMENT — (A) ACCESSIBLE WATER CLOSET — (B) AMBULATORY ACCESSIBLE WATER CLOSET

TOILET CLEARANCE REQUIREMENTS

A4 1/4" = 1'-0"

5

GENERAL NOTES:

- REFER TO DOOR HARDWARE SPECIFICATIONS FOR DOOR HARDWARE ADA REQUIREMENTS AND STANDARDS.
- REFER TO ELECTRICAL DRAWINGS FOR ELECTRICAL DEVICES ADA MOUNTING HEIGHT REQUIREMENTS.
- REFER TO SITE PLAN FOR ACCESSIBLE ROUTE REQUIREMENTS AND DETAIL REFERENCES. (NOT APPLICABLE TO ALL PROJECTS.)
- UNLESS NOTED AS "MIN." OR "MAX" DIMENSIONS SHOWN ARE ABSOLUTE. DIMENSIONS SHOWN HERE SHALL GOVERN THE INSTALLATION OF ALL ACCESSIBLE FIXTURES AND ACCESSORIES. UNLESS MORE SPECIFIC DIMENSIONS ARE SHOWN ELSEWHERE IN THE CONTRACT DOCUMENTS THAT ARE WITHIN THE PERMISSIBLE LIMITS SHOWN HERE.
- MOUNTING HEIGHTS OF RESTROOM FIXTURES AND ACCESSORIES. PROVIDE BACKING AT ALL WALL MOUNTED FIXTURES AND EQUIPMENT.

DRINKING FOUNTAIN CLEARANCES

1. RECESSED FOUNTAINS:
WITHIN ALCOVES MINIMUM 63" WIDE, MINIMUM 18" DEEP WHEN DOUBLE DRINKING FOUNTAINS ARE REQUIRED AND 32" MIN. CLR. WHEN A SINGLE FOUNTAIN IS PERMITTED.
   A. CONTRACTOR SHALL COORDINATE WITH SIZE OF WATER FOUNTAIN TO BE USED AND SIZE ALCOVE ACCORDINGLY COMPLYING WITH REQUIREMENTS AND RECOMMENDATIONS AND COORDINATING WITH THE ARCHITECT.
2. PROJECTED FOUNTAINS:
WARNING FOR THE VISION IMPAIRED AT A PROJECTED DRINKING FOUNTAIN CAN BE PROVIDED BY EITHER OF THE FOLLOWING MEANS:
   A. THE SURFACE OF THE FLOOR OR GROUND AT THE DRINKING FOUNTAIN CAN BE OF CONTRASTING COLOR WITH A TEXTURE THAT CONTRASTS IN RESILIENCY WITH THE ADJACENT FINISHED FLOOR MATERIAL, SO THAT IT CAN BE SENSED BY A CANE, WITH THE TEXTURE EXTENDING FROM THE WALL TO ONE FOOT BEYOND THE FRONT EDGE OF THE DRINKING FOUNTAIN AND ONE FOOT BEYOND EACH SIDE OF THE FOUNTAIN, OR INSTALL WING WALLS ON EACH SIDE OF THE DRINKING FOUNTAIN TO B. PROJECT OUT FROM THE MAIN WALL AT LEAST AS FAR AS THE DRINKING FOUNTAIN AND TO WITHIN 6" OF THE PATH OF TRAVEL FLOOR FINISH. THERE MUST BE 32" CLEAR BETWEEN THE WING WALLS.

NOTE:
ILLUSTRATIONS SHOWN HERE ARE FOR DIMENSIONAL ACCESSIBILITY PURPOSES ONLY. A SECOND DRINKING FOUNTAIN SHOULD BE PROVIDED AT A MOUNTING HEIGHT SUITABLE TO PERSONS WITH LIMITED PHYSICAL BENDING ABILITY, ADJACENT TO THE ACCESSIBLE FOUNTAIN, MAINTAINING MINIMUM CLEARANCES NOTED AND AS REQUIRED. PROVIDE TEXTURED AREA OF CONTRASTING COLOR TO IDENTIFY WATER FOUNTAIN LOCATION AS NOTED. WHEN FOUNTAIN IS AT AN INTERIOR LOCATION, THE TEXTURED AREA SHALL ALSO BE OF DIFFERENT RESILIENCY THAN THAT OF THE ADJACENT FLOOR SURFACE FINISH. SEE TYPICAL ACCESSIBILITY NOTES SHEET FOR ADDITIONAL REQUIREMENTS.

PLAN VIEW — NON ADA ELEVATION HEIGHTS

ADA ELEVATION HEIGHTS — CHILDRENS ELEVATION HEIGHTS

DRINKING FOUNTAIN CLEARANCES

RECESSED FOUNTAINS

WATER COOLER REQUIREMENTS

A5 1/4" = 1'-0"

ARCHITECT 1877

ajc architects

703 east 1700 south
salt lake city, utah 84105
ph: 801.466.8818
fx: 801.466.4411
www.ajcarchitects.com

ARCHITECT / CONSULTANT

STATE OF UTAH — KENT B. RIGBY — No. 135096 — 05.18.2020 — LICENSED ARCHITECT

OWNER INFORMATION

PROJECT DESCRIPTION

DUMKE GYMNASTICS TRAINING CENTER

1825 E. SOUTH CAMPUS DRIVE
SALT LAKE CITY, UT 84112

AHJ STAMP

SHEET NAME:

ADA REQUIREMENTS

REVISIONS

MARK	DATE	DESCRIPTION

ISSUE DATA

ISSUE DATE:	10.18.21
ISSUE TYPE:	CD
DRAWN BY:	AT|DG
CHECKED BY:	KR
PROJECT#:	1877

SHEET NUMBER:

GI004

10/18/2021 4:25:09 PM S:\ajc users\ataylor\Revit Local Files\21 0928 - 1877 - Dumke Womens Gymnastics Facility V20_detached_ataylorUV5V2.rvt
ALL IDEAS, DESIGNS, ARRANGEMENTS AND PLANS INDICATED OR REPRESENTED BY THIS DRAWING ARE OWNED BY AND ARE PROPERTY OF AJC ARCHITECTS PC AND WERE CREATED, EVOLVED, AND DEVELOPED FOR USE ON AND IN CONNECTION WITH THE SPECIFIED PROJECT. NONE OF THE IDEAS, DESIGNS, ARRANGEMENTS OR PLANS INDICATED OR REPRESENTED BY THIS DRAWING MAY BE USED BY OR DISCLOSED TO ANY PERSON, FIRM, OR CORPORATION FOR ANY PURPOSE WHATSOEVER WITHOUT WRITTEN CONSENT OF AJC ARCHITECTS PC. WRITTEN DIMENSIONS ON THESE DRAWINGS SHALL HAVE PRECEDENCE OVER SCALE DIMENSIONS. CONTRACTORS SHALL VERIFY AND BE RESPONSIBLE FOR ALL DIMENSIONS AND CONDITIONS ON THE JOB AND THE OFFICE MUST BE NOTIFIED OF ANY VARIATION FROM THE DIMENSIONS AND CONDITIONS SHOWN BY THESE DRAWINGS. WARNING: REPRODUCTION HEREOF IS A COMMERCIAL OFFENSE UNDER 18 U.S.C. SEC. 506. UNAUTHORIZED DISCLOSURE MAY CONSTITUTE TRADE SECRET MISAPPROPRIATION IN VIOLATION OF 12-24-2 31-1 ET. SEQ. AND OTHER LAWS.

1 2 3 4 5

D

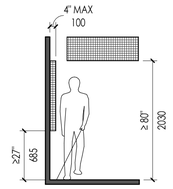

LIMITS OF PROTRUDING OBJECTS

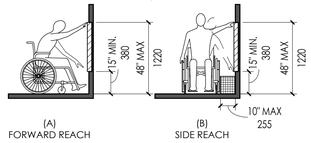

(A) FORWARD REACH (B) SIDE REACH

UNOBSTRUCTED REACH

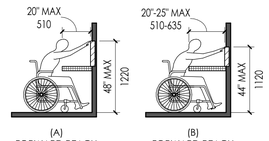

(A) FORWARD REACH (B) FORWARD REACH

OBSTRUCTED HIGH REACH

CHILDRENS REACH RANGES			
FORWARD OR SIDE REACH	AGES 3 & 4	AGES 5 - 8	AGES 9 - 12
HIGH (MAXIMUM)	36" (915MM)	40" (1015MM)	44" (1120MM)
LOW (MINIMUM)	20" (510MM)	18" (455MM)	16" (405MM)

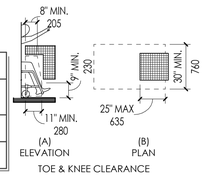

(A) ELEVATION (B) PLAN

TOE & KNEE CLEARANCE

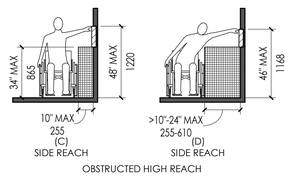

(C) SIDE REACH (D) SIDE REACH

D1 REACH REQUIREMENTS1

C

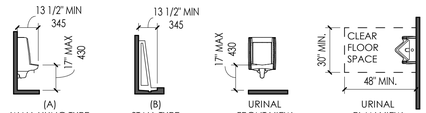

(A) WALL HUNG TYPE (B) STALL TYPE URINAL FRONT VIEW URINAL PLAN VIEW

HEIGHT AND DEPTH OF URINALS

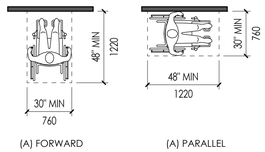

(A) FORWARD (A) PARALLEL

POSITION OF CLEAR FLOOR OR GROUND SPACE

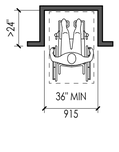

MANEUVERING CLEARANCE IN AN ALCOVE, FORWARD APPROACH

C1 URINAL CLEARANCE REQUIREMENTS1

1/4" = 1'-0"

B

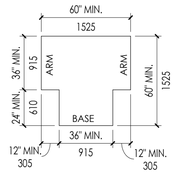

T-SHAPED TURNING SPACE

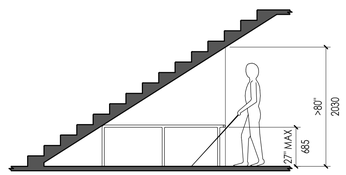

VERTICAL CLEARANCE

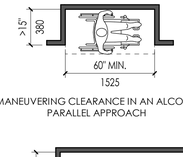

MANEUVERING CLEARANCE IN AN ALCOVE, PARALLEL APPROACH

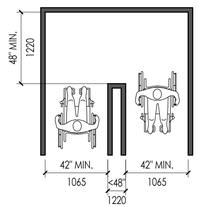

(A) 180 DEGREE TURN

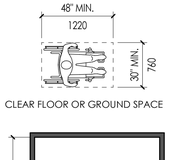

CLEAR FLOOR OR GROUND SPACE

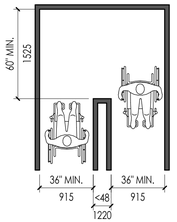

(B) 180 DEGREE TURN (EXCEPTION)

CLEAR WIDTH AT TURN

B1 CLEAR FLOOR SPACE & HEIGHT REQUIREMENTS1

A

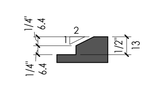

BEVELED CHANGE IN LEVEL

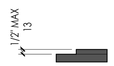

CARPET PILE HEIGHT

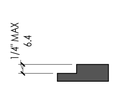

VERTICAL CHANGE IN LEVEL

A1 LEVEL CHANGE1

6" = 1'-0"

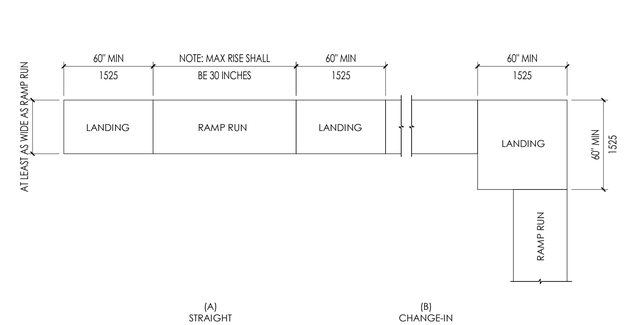

(A) STRAIGHT (B) CHANGE-IN DIRECTION

A2 RAMP LANDINGS1

1/4" = 1'-0"

GENERAL NOTES:

- REFER TO DOOR HARDWARE SPECIFICATIONS FOR DOOR HARDWARE ADA REQUIREMENTS AND STANDARDS.
- REFER TO ELECTRICAL DRAWINGS FOR ELECTRICAL DEVICES ADA MOUNTING HEIGHT REQUIREMENTS.
- REFER TO SITE PLAN FOR ACCESSIBLE ROUTE REQUIREMENTS AND DETAIL REFERENCES. (NOT APPLICABLE TO ALL PROJECTS.)
- UNLESS NOTED AS "MIN." OR "MAX" DIMENSIONS SHOWN ARE ABSOLUTE. DIMENSIONS SHOWN HERE SHALL GOVERN THE INSTALLATION OF ALL ACCESSIBLE FIXTURES AND ACCESSORIES. UNLESS MORE SPECIFIC DIMENSIONS ARE SHOWN ELSEWHERE IN THE CONTRACT DOCUMENTS THAT ARE WITHIN THE PERMISSIBLE LIMITS SHOWN HERE.
- MOUNTING HEIGHTS OF RESTROOM FIXTURES AND ACCESSORIES. PROVIDE BACKING AT ALL WALL MOUNTED FIXTURES AND EQUIPMENT.



INTERNATIONAL SYMBOL FOR ACCESS FOR HEARING IMPAIRED



PROPORTIONS



VOLUME CONTROL



INTERNATIONAL TDD SYMBOL

LETTERS AND NUMBERS:

1. LETTERS AND NUMBERS ON SIGNS SHALL BE RAISED 1/32" MINIMUM AND SHALL BE SANS-SERIF UPPERCASE CHARACTERS ACCOMPANIED BY GRADE 2 BRAILLE. (SEC. 1117B.5.6.1)
2. RAISED CHARACTERS OR SYMBOLS SHALL BE A MINIMUM OF 5/8" HIGH. (SEC. 1117B5.6.2)
3. PICTORIAL SYMBOL SIGNS (PICTOGRAMS) SHALL BE ACCOMPANIED BY THE EQUIVALENT VERBAL DESCRIPTION PLACED DIRECTLY BELOW THE PICTOGRAM. THE BORDER DIMENSION OF THE PICTOGRAM SHALL BE A MINIMUM OF 6" IN HEIGHT. (SEC. 1117B.5.6.3)
4. LETTERS AND NUMBERS ON SIGNS SHALL HAVE A WIDTH-TO-HEIGHT RATIO OF BETWEEN 3:5 AND 1:1 AND A STROKE WIDTH-TO-HEIGHT RATIO BETWEEN 1:5 AND 1:10. (SEC. 1117B.5.3)
5. CHARACTERS AND SYMBOLS SHALL CONTRAST WITH THEIR BACKGROUND, EITHER LIGHT CHARACTERS ON A DARK BACKGROUND OR DARK CHARACTERS ON A LIGHT BACKGROUND. (SEC. 1117B.5.5)
6. CHARACTERS AND NUMBERS ON SIGNS SHALL BE SIZED ACCORDING TO THE VIEWING DISTANCE FROM WHICH THEY ARE TO BE READ. THE MINIMUM HEIGHT IS MEASURED USING AN UPPER CASE X. LOWER CASE CHARACTERS ARE PERMITTED. FOR SIGNS SUSPENDED OR PROJECTED ABOVE THE FINISH FLOOR IN COMPLIANCE WITH SECTION 1121B, THE MINIMUM CHARACTER HEIGHT SHALL BE 3". (SEC. 1117B.5.4)
7. CONTRACTED GRADE 2 BRAILLE SHALL BE USED WHEREVER BRAILLE SYMBOLS ARE SPECIFICALLY REQUIRED IN OTHER PORTIONS OF THESE REGULATIONS. DOTS SHALL BE 1/10" ON CENTERS IN EACH CELL WITH 2/10" SPACE BETWEEN CELLS. DOTS SHALL BE RAISED A MINIMUM OF 1/40" ABOVE THE BACKGROUND. (SEC. 1117B.5.2)

SIGN LOCATIONS:

1. ALL BUILDING ENTRANCES THAT ARE ACCESSIBLE TO AND USABLE BY PERSONS WITH DISABILITIES AND AT EVERY MAJOR JUNCTION ALONG OR LEADING TO AN ACCESSIBLE ROUTE OF TRAVEL SHALL BE IDENTIFIED WITH A SIGN DISPLAYING THE INTERNATIONAL SYMBOL OF ACCESSIBILITY AND WITH ADDITIONAL DIRECTIONAL SIGNS, AS REQUIRED, TO BE VISIBLE TO PERSONS ALONG APPROACHING PEDESTRIAN WAYS. (SEC. 1117B.5.7 & 1127B.3)
2. WHEN PERMANENT IDENTIFICATION IS PROVIDED FOR ROOMS AND SPACES, RAISED LETTERS SHALL BE PROVIDED AND SHALL BE ACCOMPANIED BY BRAILLE IN CONFORMANCE WITH SECTION 1117B.5.6. SIGNS SHALL BE INSTALLED ON THE WALL ADJACENT TO THE LATCH OUTSIDE OF THE DOOR. WHERE THERE IS NO WALL SPACE ON THE LATCH SIDE, INCLUDING AT LEAF DOORS, SIGNS SHALL BE PLACE ON THE NEAREST ADJACENT WALL, PREFERABLY ON THE RIGHT. MOUNTING HEIGHT SHALL BE 60" ABOVE THE FINISH FLOOR TO THE CENTERLINE OF THE SIGN. MOUNTING LOCATION SHALL BE DETERMINED SO THAT THE PERSON MAY APPROACH WITHIN 3" OF THE SIGNAGE WITHOUT ENCOUNTERING PROTRUDING OBJECTS OR STANDING WITHIN THE SWING OF A DOOR. (SEC. 1117B.5.9)
3. ADDITIONAL DIRECTIONAL SIGNS ALONG ACCESSIBLE PATH OF TRAVEL ARE REQUIRED.
4. BUILDINGS REMODELED TO PROVIDE ACCESSIBLE SANITARY FACILITIES FOR PUBLIC USE SHALL HAVE INFORMATION POSTED IN THE LOBBY AS PART OF THE BUILDING DIRECTORY.

INTERNATIONAL SYMBOL OF ACCESSIBILITY:

1. STANDARD USED TO IDENTIFY ACCESSIBLE FACILITIES.
2. WHITE FIGURE ON BLUE BACKGROUND. COLOR # 15090 ON FEDERAL STANDARD # 595A.
3. WHEN ENFORCING AGENCY DETERMINES, IF APPROPRIATE, SPECIAL DESIGNS AND COLORS MAY BE APPROVED.

BRAILLE:

1. USE CONTRASTED GRADE 2 BRAILLE. DOTS TO BE 0.1 INCH ON CENTER IN EACH CELL.
2. 0.2 INCH SPACE BETWEEN CELLS.
3. DOTS RAISED MINIMUM 0.025 INCH ABOVE BACKGROUND.
4. SEE 4/T-4 FOR MORE INFO.

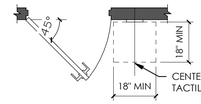

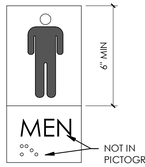

DOOR SIGNAGE

7 SIGNS - PICTOGRAMS1

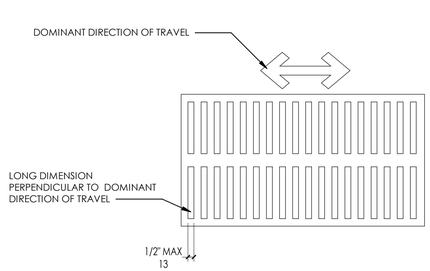

A3 ELONGATED OPENINGS1

1/4" = 1'-0"

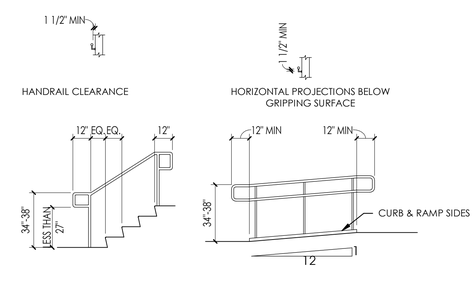

TYPICAL HANDRAILS AT STAIRS TYPICAL HANDRAILS AT RAMPS

A4 HANDRAIL REQUIREMENTS1

1/4" = 1'-0"

ARCHITECT 1877
ajc architects
703 east 1700 south
salt lake city, utah 84105
ph: 801.466.8818
fx: 801.466.4411
www.ajcarchitects.com

ARCHITECT / CONSULTANT

STATE OF UTAH
KENT B. RIGBY
No. 135090
05.18.2020
LICENSED ARCHITECT

OWNER INFORMATION

PROJECT DESCRIPTION

DUMKE GYMNASTICS TRAINING CENTER

1825 E. SOUTH CAMPUS DRIVE
SALT LAKE CITY, UT 84112

AHJ STAMP

SHEET NAME:
ADA REQUIREMENTS

REVISIONS

MARK	DATE	DESCRIPTION

ISSUE DATA

ISSUE DATE:	10.18.21
ISSUE TYPE:	CD
DRAWN BY:	AT|DG
CHECKED BY:	KR
PROJECT#:	1877

SHEET NUMBER:

GI005

GENERAL NOTES

1. ALL CONSTRUCTION MUST STRICTLY FOLLOW THE STANDARDS AND SPECIFICATIONS SET FORTH BY: THE UNIVERSITY OF UTAH, INDIVIDUAL PRODUCT MANUFACTURERS, AMERICAN PUBLIC WORKS ASSOCIATION (APWA), AND THE DESIGN ENGINEER. THE ORDER LISTED ABOVE IS ARRANGED BY SENIORITY. IF A CONSTRUCTION PRACTICE IS NOT SPECIFIED BY ANY OF THE LISTED SOURCES, CONTRACTOR MUST CONTACT DESIGN ENGINEER FOR DIRECTION.
2. PROJECT MUST FOLLOW THE BUILDING CODES: 2012 IBC, 2003 ANSI 117.1, AND 1994 ADAAG.
3. CONTRACTOR TO STRICTLY FOLLOW THE SOILS REPORT. ALL GRADING INCLUDING BUT NOT LIMITED TO CUT, FILL, COMPACTION, ASPHALT SECTION, SUBBASE, TRENCH EXCAVATION/BACKFILL, SITE GRUBBING, AND FOOTINGS MUST BE COORDINATED DIRECTLY WITH THE SOILS REPORT.
4. ANY AREA OUTSIDE THE LIMIT OF WORK THAT IS DISTURBED SHALL BE RESTORED TO ITS ORIGINAL CONDITION AT NO COST TO OWNER.
5. CONSULT ALL OF THE DRAWINGS AND SPECIFICATIONS FOR COORDINATION REQUIREMENTS BEFORE COMMENCING CONSTRUCTION.
6. AT ALL LOCATIONS WHERE EXISTING PAVEMENT ABUTS NEW CONSTRUCTION, THE EDGE OF THE EXISTING PAVEMENT SHALL BE SAW CUT TO A CLEAN, SMOOTH EDGE.
7. ALL CONSTRUCTION AND MATERIALS SHALL BE IN ACCORDANCE WITH THE MOST RECENT, ADOPTED EDITION OF ADA ACCESSIBILITY GUIDELINES
8. CONTRACTOR MUST VERIFY ALL EXISTING CONDITIONS BEFORE BIDDING AND BRING UP ANY QUESTIONS BEFOREHAND.
9. CONTRACTOR IS RESPONSIBLE FOR SCHEDULING AND NOTIFYING ENGINEER OR INSPECTING AUTHORITY 72 HOURS IN ADVANCE OF COVERING UP ANY PHASE OF CONSTRUCTION REQUIRING OBSERVATION.
10. ALL DIMENSIONS, GRADES & UTILITY DESIGNS SHOWN ON THE PLANS SHALL BE VERIFIED BY THE CONTRACTOR PRIOR TO CONSTRUCTION. CONTRACTOR SHALL NOTIFY ENGINEER OF ANY DISCREPANCIES PRIOR TO PROCEEDING WITH CONSTRUCTION FOR NECESSARY PLAN OR GRADE CHANGES.
11. CONTRACTOR SHALL BE RESPONSIBLE FOR ALL FLAGGING, CAUTION SIGNS, LIGHTS, BARRICADES, FLAGMEN, AND ALL OTHER DEVICES NECESSARY FOR PUBLIC SAFETY.
12. THE CONTRACTOR SHALL, AT THE TIME OF BIDDING, AND, THROUGHOUT THE PERIOD OF THE CONTRACT, BE LICENSED IN THE STATE OF UTAH AND SHALL DEMONSTRATE CURRENT BONDING ABILITY FOR AN AMOUNT EQUAL TO OR GREATER THAN THE AMOUNT BID AND TO DO THE TYPE OF WORK CONTEMPLATED IN THE PLANS AND SPECIFICATIONS. CONTRACTOR SHALL BE SKILLED AND REGULARLY ENGAGED IN THE GENERAL CLASS AND TYPE OF WORK CALLED FOR IN THE PLANS AND SPECIFICATIONS.
13. THIS DRAWING SET IS NOT AN ALL-INCLUSIVE SET OF DRAWINGS. CONTRACTOR TO COORDINATE WITH ALL OTHER DISCIPLINES, INCLUDING BUT NOT LIMITED TO: SOILS REPORT, LANDSCAPE PLANS, SITE ELECTRICAL AND LIGHTING PLANS, MECHANICAL PLANS, & ARCHITECTURAL PLANS.
14. CONTRACTOR SHALL INSPECT THE SITE OF THE WORK PRIOR TO BIDDING TO SATISFY THEMSELVES BY PERSONAL EXAMINATION OR BY SUCH OTHER MEANS AS THEY MAY PREFER, OF THE LOCATION OF THE PROPOSED WORK, AND OF THE ACTUAL CONDITIONS OF AND AT THE SITE OF WORK. IF, DURING THE COURSE OF THEIR EXAMINATION, A BIDDER FINDS FACTS OR CONDITIONS WHICH APPEAR TO THEM TO BE IN CONFLICT WITH THE LETTER OR SPIRIT OF THE PROJECT PLANS AND SPECIFICATIONS, THEY SHALL CONTACT THE ENGINEER FOR ADDITIONAL INFORMATION AND EXPLANATION BEFORE SUBMITTING THEIR BID. SUBMISSION OF A BID BY THE CONTRACTOR SHALL CONSTITUTE ACKNOWLEDGMENT THAT, IF AWARDED THE CONTRACT, THEY HAVE RELIED AND ARE RELYING ON THEIR OWN EXAMINATION OF (1) THE SITE OF THE WORK, (2) ACCESS TO THE SITE, AND (3) ALL OTHER DATA AND MATTERS REQUISITE TO THE FULFILLMENT OF THE WORK AND ON THEIR OWN KNOWLEDGE OF EXISTING FACILITIES ON AND IN THE VICINITY OF THE SITE OF THE WORK TO BE CONSTRUCTED UNDER THIS CONTRACT. THE INFORMATION PROVIDED BY THE ENGINEER IS NOT INTENDED TO BE A SUBSTITUTE FOR, OR A SUPPLEMENT TO THE INDEPENDENT VERIFICATION BY THE CONTRACTOR TO THE EXTENT SUCH INDEPENDENT INVESTIGATION OF SITE CONDITIONS IS DEEMED NECESSARY OR DESIRABLE BY THE CONTRACTOR. CONTRACTOR SHALL ACKNOWLEDGE THAT THEY HAVE NOT RELIED SOLELY UPON OWNER OR ENGINEER FURNISHED INFORMATION REGARDING SITE CONDITIONS IN PREPARING AND SUBMITTING THEIR BID.
15. THE CONTRACTOR SHALL BE RESPONSIBLE TO PROVIDE ALL WATER, POWER, SANITARY FACILITIES AND TELEPHONE SERVICES AS REQUIRED FOR THE CONTRACTORS USE DURING CONSTRUCTION.
16. THE CONTRACTOR SHALL BE HELD RESPONSIBLE FOR ANY FIELD CHANGES MADE WITHOUT PRIOR WRITTEN AUTHORIZATION FROM THE OWNER, ENGINEER, UTAH DEPARTMENT OF FACILITIES MANAGEMENT AND/OR THE UNIVERSITY OF UTAH.
17. THE CONTRACTOR SHALL EXERCISE DUE CAUTION AND SHALL CAREFULLY PRESERVE BENCH MARKS, CONTROL POINTS, REFERENCE POINTS AND ALL SURVEY STAKES, AND SHALL BEAR ALL EXPENSES FOR REPLACEMENT AND/OR ERRORS CAUSED BY THEIR UNNECESSARY LOSS OR DISTURBANCE.
18. THE CONTRACTOR SHALL ASSUME SOLE AND COMPLETE RESPONSIBILITY FOR JOBSITE CONDITIONS DURING THE COURSE OF CONSTRUCTION OF THIS PROJECT, INCLUDING SAFETY OF ALL PERSONS AND PROPERTY. THIS REQUIREMENT SHALL APPLY CONTINUOUSLY AND NOT BE LIMITED TO NORMAL WORKING HOURS. THE CONTRACTOR SHALL DEFEND, INDEMNIFY AND HOLD THE OWNER AND ENGINEER HARMLESS FROM ANY AND ALL LIABILITY, REAL OR ALLEGED, IN CONNECTION WITH THE PERFORMANCE OF WORK ON THIS PROJECT, EXCEPTING FOR LIABILITY ARISING FROM THE SOLE NEGLIGENCE OF THE OWNER OR THE ENGINEER.
19. THE CONTRACTOR SHALL BE RESPONSIBLE FOR ADEQUATELY SCHEDULING INSPECTION AND TESTING OF ALL FACILITIES CONSTRUCTED UNDER THIS CONTRACT. ALL TESTING SHALL CONFORM TO THE UTAH DEPARTMENT OF FACILITIES MANAGEMENT REQUIREMENTS. ALL TESTING AND INSPECTION SHALL BE PAID FOR BY THE OWNER; ALL RE-TESTING AND/OR RE- INSPECTION SHALL BE PAID FOR BY THE CONTRACTOR.
20. THE CONTRACTOR SHALL MAINTAIN A NEATLY MARKED SET OF FULL-SIZE AS-BUILT RECORD DRAWINGS SHOWING THE FINAL LOCATION AND LAYOUT OF ALL STRUCTURES AND OTHER FACILITIES. AS-BUILT RECORD DRAWINGS SHALL REFLECT CHANGE ORDERS, ACCOMMODATIONS, AND ADJUSTMENTS TO ALL IMPROVEMENTS CONSTRUCTED. WHERE NECESSARY, SUPPLEMENTAL DRAWINGS SHALL BE PREPARED AND SUBMITTED BY THE CONTRACTOR. PRIOR TO ACCEPTANCE OF THE PROJECT, THE CONTRACTOR SHALL DELIVER TO THE ENGINEER, ONE SET OF NEATLY MARKED AS-BUILT RECORD DRAWINGS SHOWING THE INFORMATION REQUIRED ABOVE. AS-BUILT RECORD DRAWINGS SHALL BE REVIEWED AND THE COMPLETE AS-BUILT RECORD DRAWING SET SHALL BE CURRENT WITH ALL CHANGES AND DEVIATIONS REDLINED AS A PRECONDITION TO THE FINAL PROGRESS PAYMENT APPROVAL AND/OR FINAL ACCEPTANCE.
21. WHERE THE PLANS OR SPECIFICATIONS DESCRIBE PORTIONS OF THE WORK IN GENERAL TERMS BUT NOT IN COMPLETE DETAIL, IT IS UNDERSTOOD THAT ONLY THE BEST GENERAL PRACTICE IS TO PREVAIL AND THAT ONLY MATERIALS AND WORKMANSHIP OF THE FIRST QUALITY ARE TO BE USED.
22. THE CONTRACTOR SHALL BE SKILLED AND REGULARLY ENGAGED IN THE GENERAL CLASS AND TYPE OF WORK CALLED FOR IN THE PROJECT PLANS AND SPECIFICATIONS. THEREFORE, THE OWNER IS RELYING UPON THE EXPERIENCE AND EXPERTISE OF THE CONTRACTOR, IT SHALL BE EXPECTED THAT PRICES PROVIDED WITHIN THE CONTRACT DOCUMENTS SHALL INCLUDE ALL LABOR AND MATERIALS NECESSARY AND PROPER FOR THE WORK CONTEMPLATED AND THAT THE WORK BE COMPLETED IN ACCORDANCE WITH THEIR TRUE INTENT AND PURPOSE. THE CONTRACTOR SHALL BE COMPETENT, KNOWLEDGEABLE AND HAVE SPECIAL SKILLS IN THE NATURE, EXTENT AND INHERENT CONDITIONS OF THE WORK TO BE PERFORMED. CONTRACTOR SHALL ALSO ACKNOWLEDGE THAT THERE ARE CERTAIN PECULIAR AND INHERENT CONDITIONS EXISTENT IN THE CONSTRUCTION OF THE PARTICULAR FACILITIES, WHICH MAY CREATE, DURING THE CONSTRUCTION PROGRAM, UNUSUAL OR UNSAFE CONDITIONS HAZARDOUS TO PERSONS, PROPERTY AND THE ENVIRONMENT. CONTRACTOR SHALL BE AWARE OF SUCH PECULIAR RISKS AND HAVE THE SKILL AND EXPERIENCE TO FORESEE AND TO ADOPT PROTECTIVE MEASURES TO ADEQUATELY AND SAFELY PERFORM THE CONSTRUCTION WORK WITH RESPECT TO SUCH HAZARDS.
23. THE CONTRACTOR SHALL PROVIDE ALL SHORING, BRACING, SLOPING OR OTHER PROVISIONS NECESSARY TO PROTECT WORKMEN FOR ALL AREAS TO BE EXCAVATED TO A DEPTH OF 4 FEET OR MORE. FOR EXCAVATIONS 4 FEET OR MORE IN DEPTH, THE CONTRACTOR SHALL COMPLY WITH INDUSTRIAL COMMISSION OF UTAH SAFETY ORDERS ALONG WITH ANY LOCAL CODES OR ORDINANCES.
24. ALL EXISTING GATES AND FENCES TO REMAIN UNLESS OTHERWISE NOTED ON PLANS. PROTECT ALL GATES AND FENCES FROM DAMAGE.
25. PRIOR TO STARTING EXCAVATION, A DIGGING PERMIT MUST BE REQUESTED THROUGH THE CAMPUS DESIGN AND CONSTRUCTION PROJECT MANAGER 5 WORKING DAYS PRIOR TO START. THE DIGGING PERMIT WILL ALSO SERVE AS NOTIFICATION FOR THE REQUEST TO LOCATE EXISTING UTILITIES. UTILITY SHUTDOWNS, ROAD AND SIDEWALK CLOSURES REQUIRE A 72 HOUR MINIMUM NOTICE PRIOR THE THE SHUTDOWN TO THE CAMPUS DESIGN AND CONSTRUCTION PROJECT MANAGER.
26. THE CONTRACTOR SHALL CLEAR AND GRUB PRIOR TO EXCAVATION REMOVING ALL PLANT LIFE, GRASS, ROOT SYSTEMS, AND ALL SURFACE DEBRIS AS NEEDED TO PROVIDE A CLEAN SUB-BASE FOR THE WORK.
27. NO ON SITE BURNING WILL BE PERMITTED.
28. LANDSCAPING FEATURES AND PLANT GROWTH DESIGNATED TO REMAIN AS FINAL LANDSCAPING ARE TO BE PROTECTED. ALL TREES REMOVED AS PART OF THE CONSTRUCTION MUST BE REPLACED ON A 2 FOR 1 BASIS UNLESS NOTED OTHERWISE. CONTACT LANDSCAPE AND MAINTENANCE DEPARTMENT AT 801-581-5358 FOR DETERMINATION OF TREE TYPE, SIZE, AND LOCATION REQUIRED. ONLY TREES IDENTIFIED FOR REMOVAL ON THE DRAWINGS ARE TO BE REMOVED.
29. CONTRACTOR SHALL POT HOLE ALL UTILITIES TO DETERMINE IF CONFLICTS EXIST PRIOR TO BEGINNING ANY EXCAVATION. NOTIFY THE DFCM, UNIVERSITY OF UTAH, AND THE ENGINEER OF ANY CONFLICTS. CONTRACTOR SHALL VERIFY LOCATION AND INVERTS OF EXISTING UTILITIES TO WHICH NEW UTILITIES WILL BE CONNECTED.
30. CONTRACTOR SHALL PROVIDE AND MAINTAIN AT ALL TIMES AMPLE MEANS AND DEVICES WITH WHICH TO REMOVE PROMPTLY AND TO PROPERLY DISPOSE OF ALL WATER ENTERING THE TRENCH EXCAVATION.
31. THE CONTRACTOR SHALL NOTIFY UNIVERSITY OF UTAH SURVEYOR IN WRITING AT LEAST 48 HOURS PRIOR TO BACKFILLING OF ANY PIPE.
32. CONTRACTOR SHALL SUBMIT A SWPPP FOR APPROVAL TO UNIVERSITY OF UTAH CAMPUS DESIGN AND CONSTRUCTION.
33. IF EXISTING IMPROVEMENTS NEED TO BE DISTURBED AND/OR REMOVED FOR THE PROPER PLACEMENT OF IMPROVEMENTS TO BE CONSTRUCTED BY THESE PLANS, THE CONTRACTOR SHALL BE RESPONSIBLE FOR PROTECTING EXISTING IMPROVEMENTS FROM DAMAGE. COST OF REPLACING OR REPAIRING EXISTING IMPROVEMENTS SHALL BE INCLUDED IN THE PRICE BID FOR ITEMS REQUIRING REMOVAL AND/OR REPLACEMENT OF EXISTING IMPROVEMENTS. REPLACEMENT WILL BE AT NO COST TO THE OWNER.
34. WHENEVER EXISTING FACILITIES ARE REMOVED, DAMAGED, BROKEN, OR CUT IN THE INSTALLATION OF THE WORK COVERED BY THESE PLANS OR SPECIFICATIONS, SAID FACILITIES SHALL BE REPLACED AT THE CONTRACTOR'S EXPENSE, WITH MATERIALS EQUAL TO OR BETTER THAN THE MATERIALS USED IN THE ORIGINAL EXISTING FACILITIES. THE FINISHED PRODUCT SHALL BE SUBJECT TO THE APPROVAL OF THE OWNER AND THE ENGINEER. LIGHTING CONDUIT THAT IS BROKEN SHALL BE REPAIRED OR REPLACED AND NEW WIRE SHALL BE PULLED THE ENTIRE DISTANCE BETWEEN LIGHTS. CONCRETE SIDEWALK AND PAVEMENT SHALL BE REPLACED TO THE NEAREST EXISTING JOINT. LIGHTING TO BE OPERATIONAL BY THE END OF EACH DAY.

UTILITY NOTES

1. UNLESS OTHERWISE NOTED, ALL DRY UTILITIES ARE ASSUMED TO BE 3' BELOW EXISTING GRADES TO TOP OF CONDUIT. ALL WATER LINES ARE ASSUMED TO BE 4' BELOW EXISTING GRADE TO TOP OF PIPE. ALL STORM AND SANITARY LINES ARE BASED ON SURVEYED INVERT DATA. CONTRACTOR TO POTHOLE ALL UTILITIES CROSSINGS, VERIFY ELEVATION INFORMATION AND CONTACT ENGINEER IF ELEVATIONS ARE DIFFERENT FROM THOSE SHOWN IN THESE PLANS.
2. CONTRACTOR IS TO COORDINATE LOCATION OF NEW "DRY UTILITIES" WITH THE APPROPRIATE UTILITY COMPANY. INCLUDING BUT NOT LIMITED TO: TELEPHONE SERVICE, GAS SERVICE, CABLE, POWER, INTERNET.
3. EXISTING UTILITIES HAVE BEEN SHOWN ON THE PLANS USING A SITE SURVEY.
4. CARE SHOULD BE TAKEN IN ALL EXCAVATIONS DUE TO POSSIBLE EXISTENCE OF UNRECORDED UTILITY LINES. EXCAVATION REQUIRED WITHIN PROXIMITY OF EXISTING UTILITY LINES SHALL BE DONE BY HAND. CONTRACTOR SHALL REPAIR ANY DAMAGE TO EXISTING UTILITY LINES OR STRUCTURES INCURRED DURING CONSTRUCTION OPERATIONS AT HIS EXPENSE.
5. ALL VALVES AND MANHOLES COVERS SHALL BE RAISED OR LOWERED TO MEET FINISHED GRADE.
6. ENSURE POSITIVE DRAINAGE FROM ANY EXISTING OR PROPOSED UTILITY STRUCTURES.
7. CONTRACTOR SHALL REMOVE AND DISPOSE OF ALL EXISTING STRUCTURES, DEBRIS, WASTE AND OTHER UNSUITABLE FILL MATERIAL FOUND WITHIN THE LIMITS OF EXCAVATION.
8. EXISTING UTILITIES HAVE BEEN SHOWN ON THE PLANS USING A SITE SURVEY. UTILITIES HAVE BEEN LOCATED WITH A TOPOGRAPHIC SURVEY LEVEL OF ACCURACY, LITTLE SUBSURFACE EXPLORATION HAS BEEN COMPLETED. CONTRACTOR IS RESPONSIBLE FOR OBTAINING RED STAKES BY CONTACTING LENARD BARNEY @ 801-718-0804. IT WILL BE THE CONTRACTOR'S SOLE RESPONSIBILITY TO DIRECTLY CONTACT ANY OTHER UTILITY COMPANIES THAT ARE NOT MEMBERS OF RED STAKES. IT SHALL BE THE CONTRACTOR'S SOLE RESPONSIBILITY TO PROTECT ALL EXISTING UTILITIES SO THAT NO DAMAGE RESULTS TO THEM DURING THE PERFORMANCE OF THIS CONTRACT. ANY REPAIRS NECESSARY TO DAMAGED UTILITIES SHALL BE PAID FOR BY THE CONTRACTOR. THE CONTRACTOR SHALL BE REQUIRED TO COOPERATE WITH OTHER CONTRACTORS AND UTILITY COMPANIES INSTALLING NEW STRUCTURES, UTILITIES AND SERVICE TO THE PROJECT
9. CARE SHOULD BE TAKEN IN ALL EXCAVATIONS DUE TO POSSIBLE EXISTENCE OF UNRECORDED UTILITY LINES. EXCAVATION REQUIRED WITHIN PROXIMITY OF EXISTING UTILITY LINES SHALL BE DONE BY HAND. CONTRACTOR SHALL REPAIR ANY DAMAGE TO EXISTING UTILITY LINES OR STRUCTURES INCURRED DURING CONSTRUCTION OPERATIONS AT HIS EXPENSE. THE CONTRACTOR SHALL BEAR ALL EXPENSES FOR THE REPLACEMENT OF THE DAMAGED UTILITIES WHOSE LOCATION HAS BEEN IDENTIFIED BY THE UNIVERSITY OR BLUESTAKING.
10. ALL BOLTED FITTINGS MUST BE GREASED AND WRAPPED.
11. IF AN EMERGENCY SHUT-DOWN OF A UTILITY IS REQUIRED CALL UNIVERSITY OF UTAH PLANT OPERATIONS DISPATCH AT (801) 581-7221

ABBREVIATIONS :

APWA	AMERICAN PUBLIC WORKS ASSOCIATION	FH	FIRE HYDRANT	PP	POWER POLE
AC	ASPHALTIC CONCRETE	FL	FLANGED JOINT	PRC	POINT OF REVERSE CURVE
&	AND	FT	FEET	PRV	PRESSURE REDUCING VALVE
APPR.	APPROXIMATELY	HP	HIGH POINT	PSI	POUNDS PER SQUARE INCH
ARV	AIR RELEASE VALVE	HORIZ	HORIZONTAL	PT	POINT OF TANGENT
@	AT	HT	HIGH TEMPERATURE	PVC	POLYVINYL CHLORIDE
BDRY	BOUNDARY	HTW	HIGH TEMPERATURE WATER	PUE	PUBLIC UTILITY EASEMENT
BG	FINISH GRADE AT BUILDING	HV	HIGH VOLTAGE	PVT	POINT OF VERTICAL TANGENT
BVC	BEGIN VERTICAL CURVE	HYD	HYDRANT	PVI	POINT OF VERTICAL INTERSECTION
BRG	BEARING	ID	INSIDE DIAMETER	R	RADIUS
BW	BOTTOM OF WALL	IE	INVERT ELEVATION	RCP	REINFORCED CONCRETE PIPE
CAV	COMBINATION AIR VALVE	IRR	IRRIGATION	REF	REFERENCE
CB	CATCH BASIN	L	LENGTH	ROW	RIGHT-OF-WAY
CL OR ℄	CENTERLINE	LF	LINEAR FEET	SS	SANITARY SEWER
CMP	CORRUGATED METAL PIPE	LP	LOW POINT	SD	STORM DRAIN
COB	CLEANOUT BOX	MAX	MAXIMUM	SW	SIDEWALK
CONC	CONCRETE	MH	MANHOLE	SCH	SCHEDULE
DET	DETAIL	MIN	MINIMUM	SF	SQUARE FEET
DIA	DIAMETER	MJ	MECHANICAL JOINT	STA	STATION
DIP	DUCTILE IRON PIPE	N	NORTH	STD	STANDARD
DIST	DISTRICT	NIC	NOT IN CONTRACT	TA	TOP OF ASPHALT
DWG	DRAWING	NTS	NOT TO SCALE	TBC	TOP BACK OF CURB
EA	EACH	OAE	OR APPROVED EQUAL	TC	TOP OF CURB
EG	EXISTING GRADE	OC	ON CENTER	TEMP	TEMPORARY
EP	EDGE OF PAVEMENT	OH	OVERHEAD	TG	TOP OF GRATE
ELEV	ELEVATION	P	POWER	TW	TOP OF WALL
ESMT	EASEMENT	PC	POINT OF CURVATURE	TYP	TYPICAL
EXIST.	EXISTING	PI	POINT OF INTERSECTION	VAR	VARIES
FF	FINISH FLOOR	PL	PROPERTY LINE	W	WATER
FG	FINISH GRADE	POC	POINT ON CURVE	W/	WITH

CIVIL SHEET INDEX

GENERAL NOTES & LEGEND	C000
DEMOLITION PLAN	C100
SITE PLAN	C200
GRADING PLAN	C300
UTILITY PLAN	C400
UTILITY PLAN	C401
DETAILS	C700

LEGEND

EXISTING BUILDING
PROPOSED BUILDING
EXISTING ASPHALT
EXISTING CONCRETE
EXISTING CONCRETE TO BE REMOVED
PROPOSED CONCRETE
CLEAR AND GRUB
PROPOSED LANDSCAPING
APPROXIMATE LIMITS OF DISTURBANCE
12"SD — UTILITY LINE TO BE REMOVED
12"SD — EXISTING STORM DRAIN PIPE
EXISTING STORM DRAIN CATCH BASIN
D — EXISTING STORM DRAIN MANHOLE
8"SS — EXISTING SANITARY SEWER PIPE
S — EXISTING SANITARY SEWER MANHOLE
UGE — EXISTING ELECTRICAL CONDUIT
EXISTING LIGHT POLE
E — EXISTING ELECTRICAL BOX
W — EXISTING WATER PIPE
IR — EXISTING IRRIGATION MANHOLE
SC — EXISTING IRRIGATION CONTROL BOX
W — EXISTING WATER METER/MANHOLE
EXISTING FIRE HYDRANT
WV — EXISTING WATER VALVE
EXISTING UTILITY TUNNEL
12"SD — PROPOSED STORM DRAIN PIPE
D — PROPOSED STORM DRAIN MANHOLE

ajc architects
703 east 1700 south
salt lake city, ut 84105
ajcarchitects.com

CIVIL ENGINEER

TALISMAN
CIVIL CONSULTANTS
1588 SOUTH MAIN STREET
SUITE 200
SLAT LAKE CITY, UT 84115
801.743.1300

AUTHORITY HAVING JURISDICTION

REGISTERED PROFESSIONAL ENGINEER
No. 1018523-2202
JEFFREY R. PALMER
5/8/20
STATE OF UTAH

PROJECT DESCRIPTION

U of U - DUMKE GYMNASTICS BUILDING REMODEL

1825 E. SOUTH
CAMPUS DRIVE
SALT LAKE CITY
UTAH 84112

SHEET NAME:

GENERAL NOTES & LEGEND

REVISIONS

MARK	DATE	DESCRIPTION

ISSUE DATE:	5-08-2020
ISSUE TYPE:	CD
DRAWN BY:	TB
CHECKED BY:	JP
PROJECT#:	1877.01

SHEET NUMBER:

C000

ALL IDEAS, DESIGNS, ARRANGEMENTS AND PLANS INDICATED OR REPRESENTED BY THIS DRAWING ARE OWNED BY AND THE PROPERTY OF AJC ARCHITECTS PC AND WERE CREATED, EVOLVED, AND DEVELOPED FOR USE ON AND IN CONNECTION WITH THE SPECIFIED PROJECT. NONE OF THE IDEAS, DESIGNS, ARRANGEMENTS OR PLANS SHALL BE USED BY OR DISCLOSED TO ANY PERSON, FIRM, OR CORPORATION FOR ANY PURPOSE WHATSOEVER WITHOUT WRITTEN CONSENT OF AJC ARCHITECTS PC. WRITTEN DIMENSIONS ON THESE DRAWINGS SHALL HAVE PRECEDENCE OVER SCALE DIMENSIONS. CONTRACTORS SHALL VERIFY AND BE RESPONSIBLE FOR ALL DIMENSIONS AND CONDITIONS ON THE JOB AND THIS OFFICE MUST BE NOTIFIED OF ANY VARIATION FROM THE DIMENSIONS AND CONDITIONS SHOWN BY THESE DRAWINGS. WARNING: REPRODUCTION HEREOF IS A CRIMINAL OFFENSE UNDER 18 U.S.C. SEC. 506. UNAUTHORIZED DISCLOSURE MAY CONSTITUTE TRADE SECRET MISAPPROPRIATION IN VIOLATION OF I.C.24-2-31-1 ET. SEQ. AND OTHER LAWS.

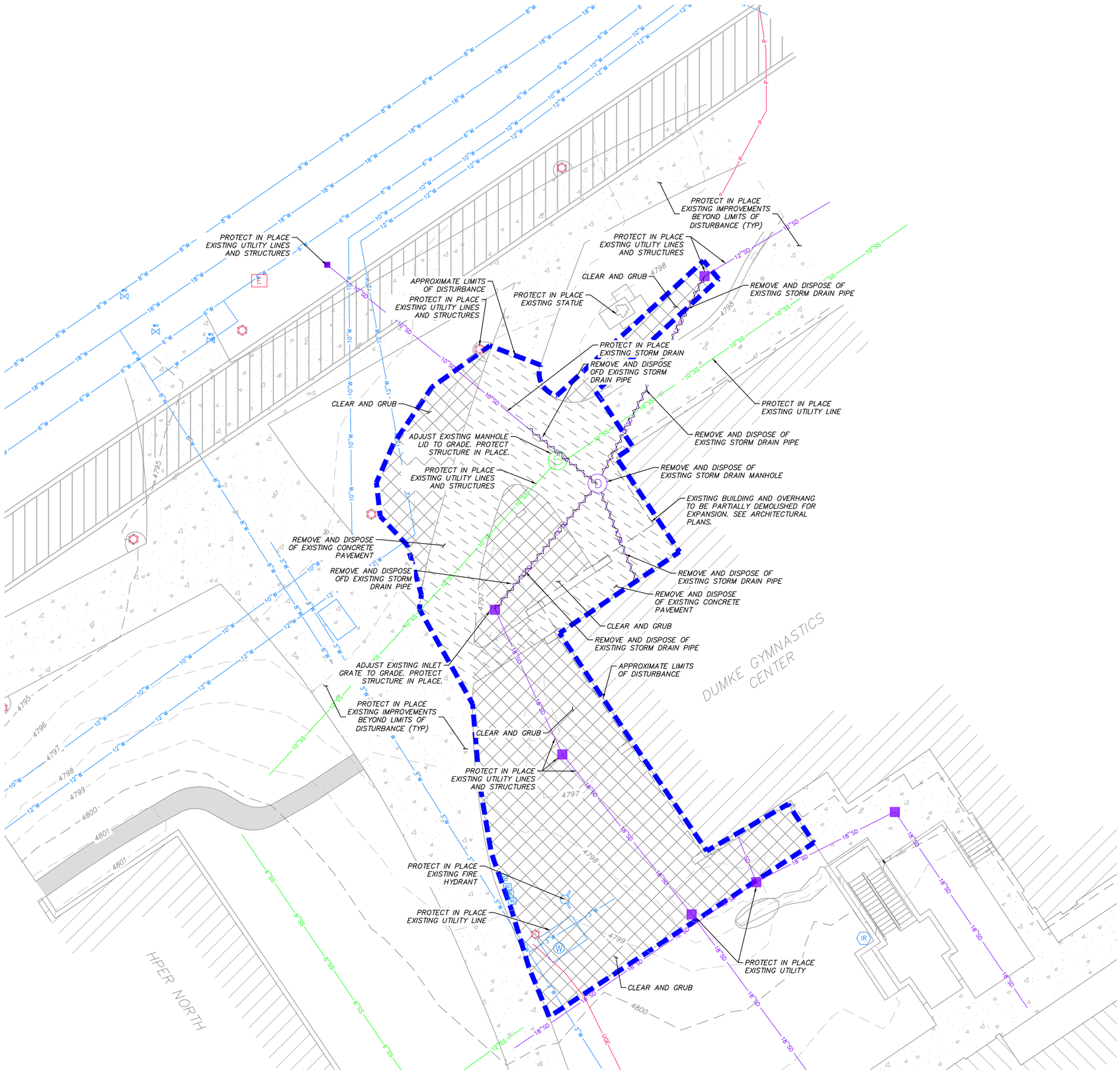

ALL IDEAS, DESIGNS, ARRANGEMENTS AND PLANS INDICATED OR REPRESENTED BY THIS DRAWING ARE OWNED BY AND THE PROPERTY OF AJC ARCHITECTS PC AND WERE CREATED, EVOLVED, AND DEVELOPED FOR USE ON AND IN CONNECTION WITH THE SPECIFIED PROJECT. NONE OF THE IDEAS, DESIGNS, ARRANGEMENTS OR PLANS SHALL BE USED BY OR DISCLOSED TO ANY PERSON, FIRM OR CORPORATION FOR ANY PURPOSE WHATSOEVER WITHOUT WRITTEN CONSENT OF AJC ARCHITECTS PC. WRITTEN DIMENSIONS ON THESE DRAWINGS SHALL HAVE PRECEDENCE OVER SCALE DIMENSIONS. CONTRACTORS SHALL VERIFY AND BE RESPONSIBLE FOR ALL DIMENSIONS AND CONDITIONS ON THE JOB AND THIS OFFICE MUST BE NOTIFIED OF ANY VARIATION FROM THE DIMENSIONS AND CONDITIONS SHOWN BY THESE DRAWINGS. WARNING: REPRODUCTION HEREOF IS A CRIMINAL OFFENSE UNDER 18 U.S.C. SEC. 506. UNAUTHORIZED DISCLOSURE MAY CONSTITUTE TRADE SECRET MISAPPROPRIATION IN VIOLATION OF 13-24-2-2011 ET. SEQ. AND OTHER LAWS.

ajc architects
703 east 1700 south
salt lake city, ut 84105
ajcarchitects.com

CIVIL ENGINEER

TALISMAN
CIVIL CONSULTANTS
1588 SOUTH MAIN STREET
SUITE 200
SLAT LAKE CITY, UT 84115
801.743.1300

AUTHORITY HAVING JURISDICTION

REGISTERED PROFESSIONAL ENGINEER
No. 10138497
JAMES PALMER
5/8/20
STATE OF UTAH

PROJECT DESCRIPTION

U of U - DUMKE GYMNASTICS BUILDING REMODEL

1825 E. SOUTH
CAMPUS DRIVE
SALT LAKE CITY
UTAH 84112

SHEET NAME:

DEMOLITION PLAN

REVISIONS

MARK	DATE	DESCRIPTION

SCALE
HORIZONTAL: 1" = 10'
0' 2.5' 5' 10' 15'

ISSUE DATE:	5-08-2020
ISSUE TYPE:	CD
DRAWN BY:	TB
CHECKED BY:	JP
PROJECT#:	1877.01

SHEET NUMBER:

C100

ALL IDEAS, DESIGNS, ARRANGEMENTS AND PLANS INDICATED OR REPRESENTED BY THIS DRAWING ARE OWNED BY AND THE PROPERTY OF AJC ARCHITECTS PC AND WERE CREATED, EVOLVED, AND DEVELOPED FOR USE ON AND IN CONNECTION WITH THE SPECIFIED PROJECT. NONE OF THE IDEAS, DESIGNS, ARRANGEMENTS OR PLANS SHALL BE USED BY OR DISCLOSED TO ANY PERSON, FIRM OR CORPORATION FOR ANY PURPOSE WHATSOEVER WITHOUT WRITTEN CONSENT OF AJC ARCHITECTS PC. WRITTEN DIMENSIONS ON THESE DRAWINGS SHALL HAVE PRECEDENCE OVER SCALE. DRAWINGS CERTIFIED BY THE ARCHITECT ARE TO BE STRICTLY ADHERED TO. ANY DEVIATION FROM THESE DRAWINGS, WARNING, REPRODUCTION OR ASSIGNMENT HEREOF WITHOUT AJC'S WRITTEN PERMISSION IS A VIOLATION OF THE LAWS AND CONVENTIONS SHOWN BY THESE DRAWINGS. WARNING: ELECTRONIC COPIES OF THESE DRAWINGS ARE NOT CONTRACT DOCUMENTS AND ARE SUBJECT TO AUTOMATIC AND UNINTENTIONAL MODIFICATION. ANY USE OF THESE ELECTRONIC COPIES FOR ANY PURPOSE WITHOUT AJC'S EXPRESS WRITTEN PERMISSION IS PROHIBITED AND ANY UNAUTHORIZED USE OR MODIFICATION OF THESE ELECTRONIC COPIES IS AT THE USER'S SOLE RISK AND WITHOUT LIABILITY TO AJC. ANY UNAUTHORIZED USE OF THESE DRAWINGS MAY CONSTITUTE COPYRIGHT INFRINGEMENT AND OTHER UNFAIR AND UNLAWFUL BUSINESS PRACTICES OR OTHER ACTS IN VIOLATION OF U.C.A. 1-1-1 ET. SEQ. AND OTHER LAWS. ANY UNAUTHORIZED DISCLOSURE MAY CONSTITUTE TRADE SECRET MISAPPROPRIATION IN VIOLATION OF U.C.A. 13-24-2-3(1-4 ET. SEQ. AND OTHER LAWS. HEREOF IS A CRIMINAL OFFENSE UNDER 18 U.S.C. SEC. 506. UNAUTHORIZED DISCLOSURE

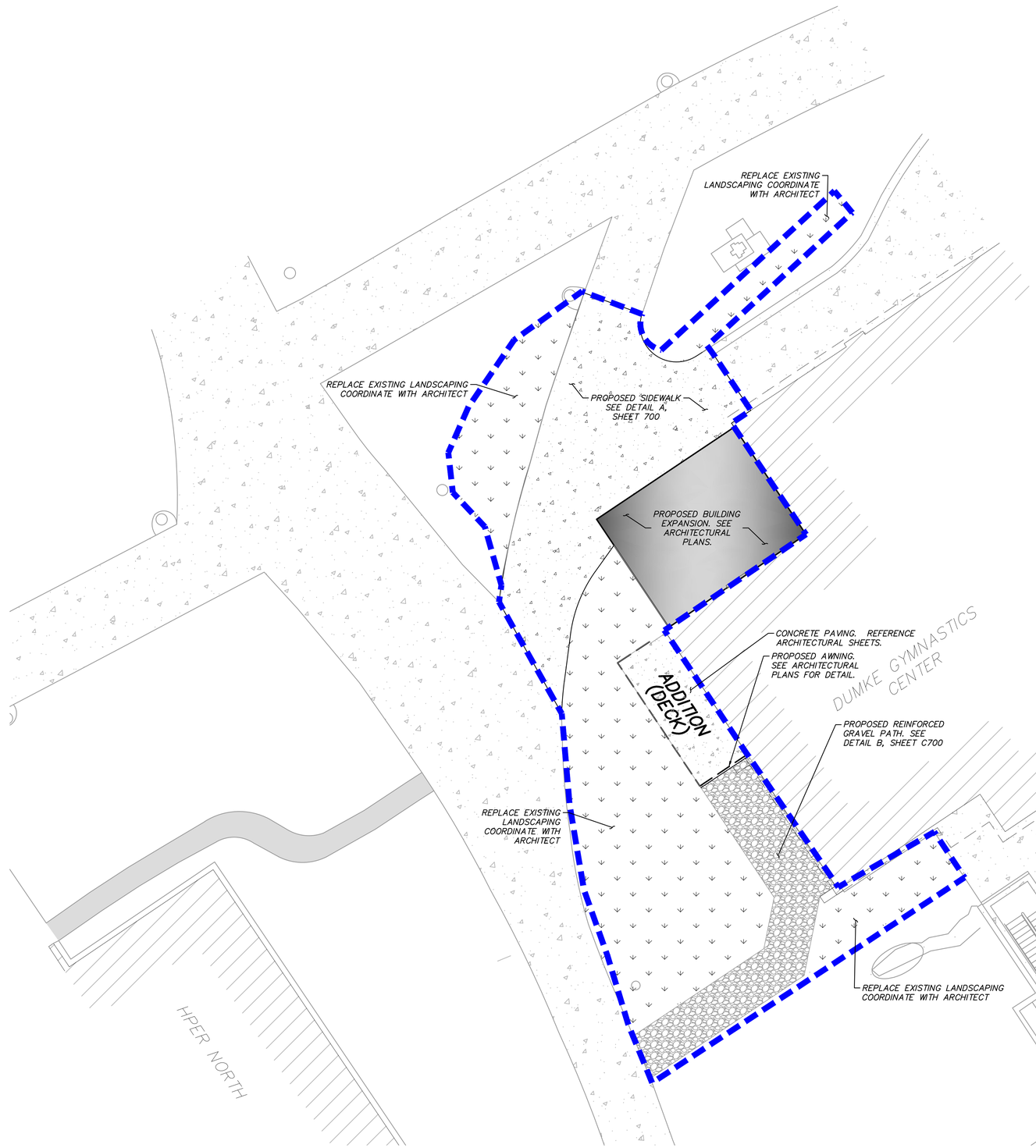

SCALE

HORIZONTAL: 1" = 10'

0 2.5' 5' 10' 15'

ajc architects
703 east 1700 south
salt lake city, ut 84105
ajcarchitects.com

CIVIL ENGINEER

TALISMAN
CIVIL CONSULTANTS
1588 SOUTH MAIN STREET
SUITE 200
SLAT LAKE CITY, UT 84115
801.743.1300

AUTHORITY HAVING JURISDICTION

JEREMY PALMER No. 7114202 PROFESSIONAL ENGINEER STATE OF UTAH 5/8/20

PROJECT DESCRIPTION

U of U - DUMKE GYMNASTICS BUILDING REMODEL

1825 E. SOUTH
CAMPUS DRIVE
SALT LAKE CITY
UTAH 84112

SHEET NAME:

SITE PLAN

REVISIONS

MARK	DATE	DESCRIPTION

ISSUE DATE:	5-08-2020
ISSUE TYPE:	CD
DRAWN BY:	TB
CHECKED BY:	JP
PROJECT#:	1877.01

SHEET NUMBER:

C200

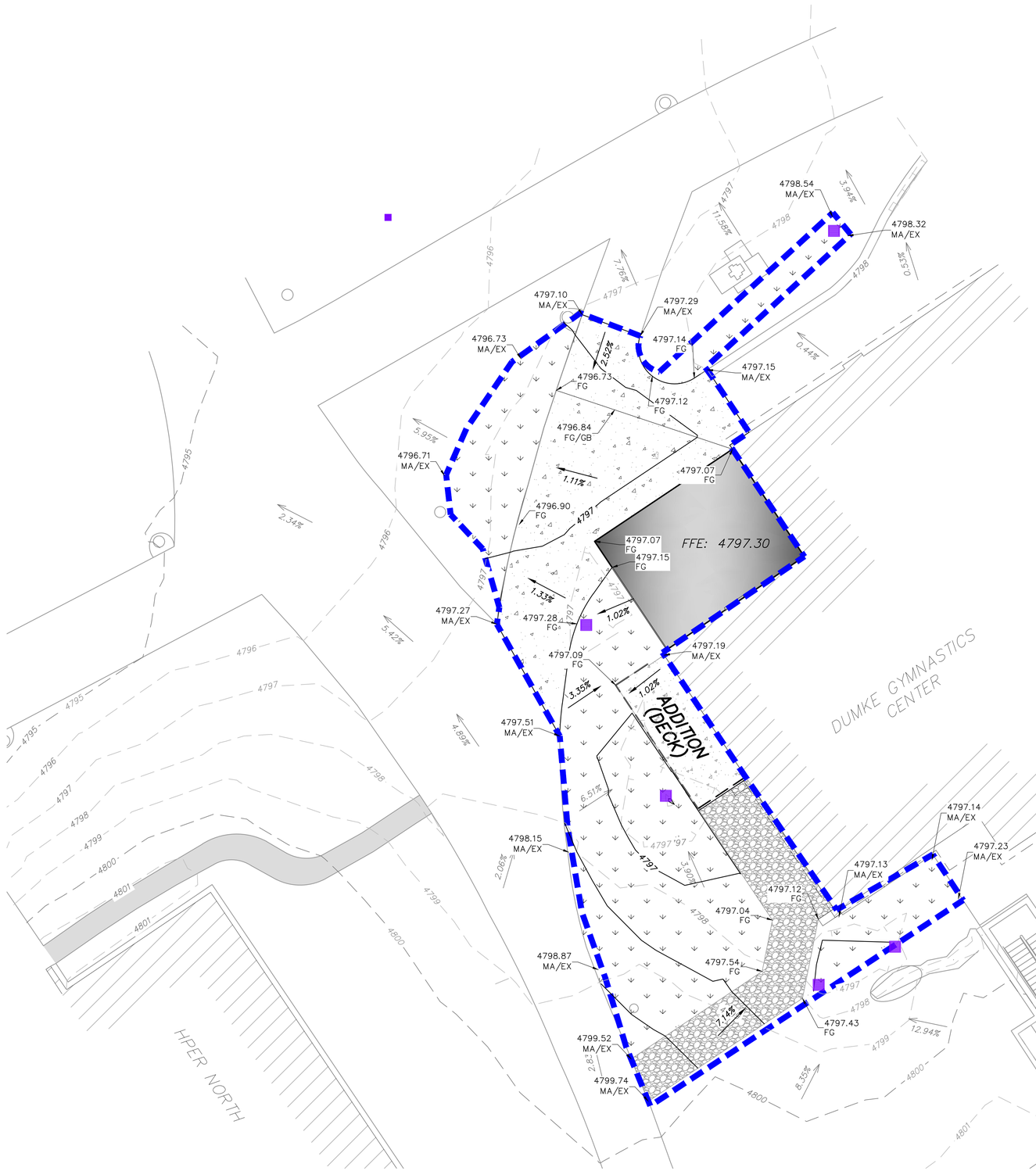

ALL IDEAS, DESIGNS, ARRANGEMENTS AND PLANS INDICATED OR REPRESENTED BY THIS DRAWING ARE OWNED BY AND THE PROPERTY OF AJC ARCHITECTS PC AND WERE CREATED, EVOLVED, AND DEVELOPED FOR USE ON AND IN CONNECTION WITH THE SPECIFIED PROJECT. NONE OF THE IDEAS, DESIGNS, ARRANGEMENTS OR PLANS SHALL BE USED BY OR DISCLOSED TO ANY PERSON, FIRM OR CORPORATION FOR ANY PURPOSE WHATSOEVER WITHOUT THE PRIOR WRITTEN CONSENT OF AJC ARCHITECTS PC. ALL COPYRIGHTS IN AND TO THESE DRAWINGS ARE RESERVED BY AJC ARCHITECTS PC. VISUAL CONTACT WITH THESE DRAWINGS SHALL CONSTITUTE PRIMA FACIE EVIDENCE OF ACCEPTANCE OF THESE RESTRICTIONS. SCALE: DIMENSIONS CONTRACTORS SHALL VERIFY AND BE RESPONSIBLE FOR ALL DIMENSIONS AND CONDITIONS ON THE JOB AND THIS OFFICE MUST BE NOTIFIED OF ANY VARIATION FROM THE DIMENSIONS AND CONDITIONS SHOWN BY THESE DRAWINGS. WARNING: REPRODUCTION HEREOF IS A CRIMINAL OFFENSE UNDER 18 U.S.C. SEC. 506. UNAUTHORIZED DISCLOSURE MAY CONSTITUTE TRADE SECRET MISAPPROPRIATION IN VIOLATION OF 1C24-2-31-1 ET. SEQ. AND OTHER LAWS.

SCALE
HORIZONTAL: 1" = 10'
0 2.5' 5' 10' 15'

SITE GENERAL NOTES:

EXISTING UNDERGROUND UTILITIES AND IMPROVEMENTS ARE SHOWN IN THEIR APPROXIMATE LOCATIONS BASED UPON RECORD INFORMATION AVAILABLE AT THE TIME OF PREPARATION OF PLANS. LOCATIONS MAY NOT HAVE BEEN VERIFIED IN THE FIELD AND NO GUARANTEE IS MADE AS TO ACCURACY OR COMPLETENESS OF THE INFORMATION SHOWN. IT SHALL BE THE RESPONSIBILITY OF THE CONTRACTOR TO DETERMINE THE EXISTENCE AND LOCATION OF THOSE UTILITIES SHOWN ON THESE PLANS OR INDICATED IN THE FIELD BY LOCATING SERVICES. ANY ADDITIONAL COSTS INCURRED AS A RESULT OF CONTRACTOR'S FAILURE TO VERIFY LOCATIONS OF EXISTING UTILITIES PRIOR TO BEGINNING OF CONSTRUCTION IN THEIR VICINITY SHALL BE BORNE BY THE CONTRACTOR AND ASSUMED INCLUDED IN THE CONTRACT.

LOCATION OF ALL UNDERGROUND UTILITIES SHOWN ARE APPROXIMATE. CONTRACTOR IS TO VERIFY CONNECTION POINTS WITH EXISTING UTILITIES. CONTRACTOR IS RESPONSIBLE FOR ANY DAMAGE CAUSED TO EXISTING UTILITIES AND UTILITY STRUCTURES THAT ARE TO REMAIN.

ALL SURFACE IMPROVEMENTS DISTURBED BY CONSTRUCTION SHALL BE RESTORED OR REPLACED, INCLUDING TREES, DECORATIVE SHRUBS, SOD, FENCES, WALLS AND STRUCTURES, WHETHER OR NOT THEY ARE SPECIFICALLY SHOWN ON THE CONTRACT DOCUMENTS.

ajc architects
703 east 1700 south
salt lake city, ut 84105
ajcarchitects.com

CIVIL ENGINEER

TALISMAN
CIVIL CONSULTANTS
1588 SOUTH MAIN STREET
SUITE 200
SLAT LAKE CITY, UT 84115
801.743.1300

AUTHORITY HAVING JURISDICTION

REGISTERED PROFESSIONAL ENGINEER
No. 7819015-2202
JAMES PARKER
5/9/20
STATE OF UTAH

PROJECT DESCRIPTION

U of U - DUMKE GYMNASTICS BUILDING REMODEL

1825 E. SOUTH
CAMPUS DRIVE
SALT LAKE CITY
UTAH 84112

SHEET NAME:

GRADING PLAN

REVISIONS

MARK	DATE	DESCRIPTION

ISSUE DATE:	5-08-2020
ISSUE TYPE:	CD
DRAWN BY:	TB
CHECKED BY:	JP
PROJECT#:	1877.01

SHEET NUMBER:

C300

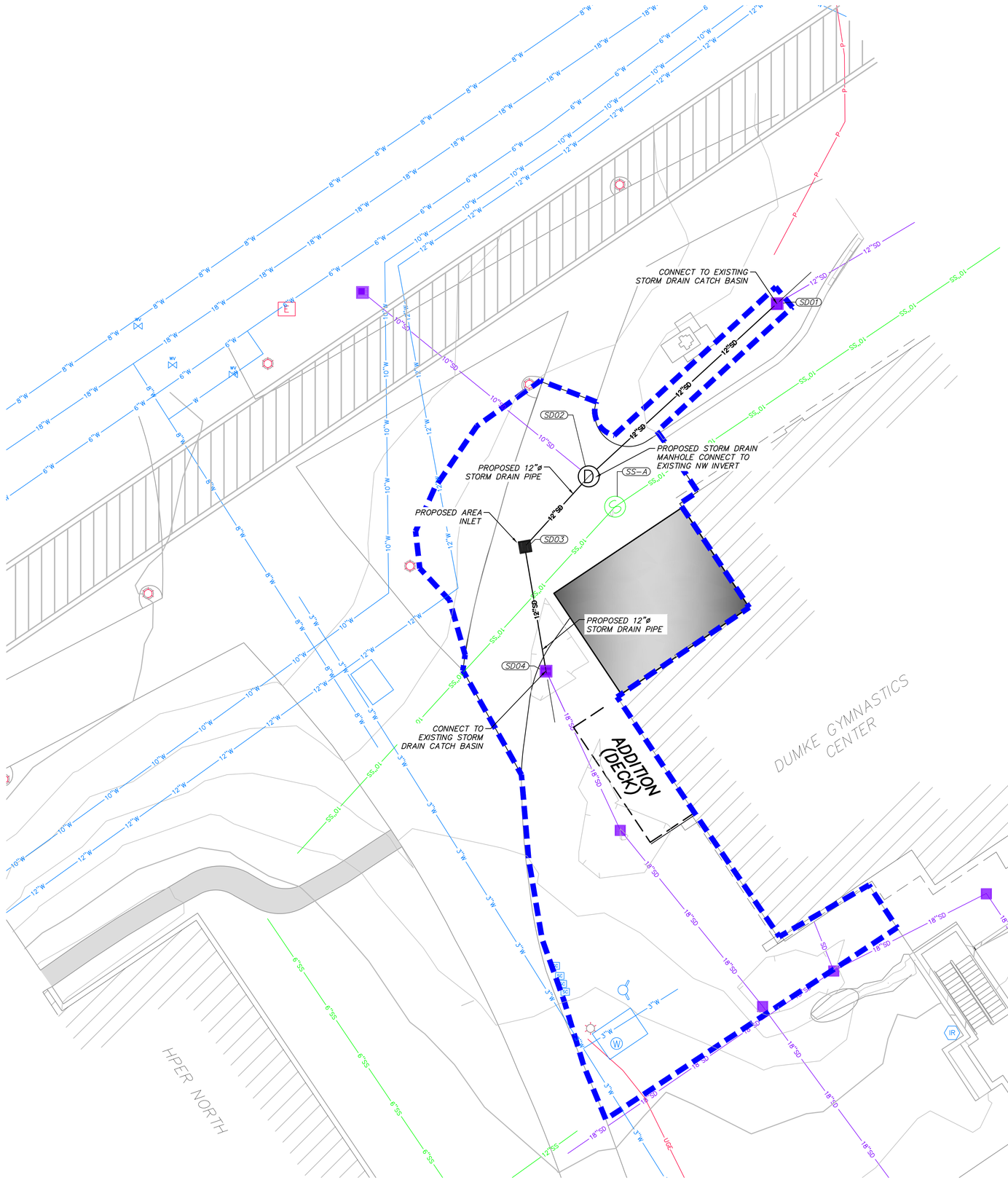

ALL IDEAS, DESIGNS, ARRANGEMENTS AND PLANS INDICATED OR REPRESENTED BY THIS DRAWING ARE OWNED BY AND THE PROPERTY OF AJC ARCHITECTS PC AND WERE CREATED, EVOLVED, AND DEVELOPED FOR USE ON AND IN CONNECTION WITH THE SPECIFIED PROJECT. NONE OF THE IDEAS, DESIGNS, ARRANGEMENTS OR PLANS SHALL BE USED BY OR DISCLOSED TO ANY PERSON, FIRM OR CORPORATION FOR ANY PURPOSE WHATSOEVER WITHOUT THE PRIOR WRITTEN PERMISSION OF AJC ARCHITECTS PC. VISUAL CONTACT WITH THESE DRAWINGS SHALL CONSTITUTE PRIMA FACIE EVIDENCE OF ACCEPTANCE OF THESE RESTRICTIONS. ALL COPYRIGHTS AND OTHER PROPERTY RIGHTS ARE RESERVED BY AJC ARCHITECTS PC. ANY REDRAWING, COPYING OR OTHER REPRODUCTION OF THESE DRAWINGS WITHOUT THE PRIOR WRITTEN CONSENT OF AJC ARCHITECTS PC IS PROHIBITED AND WILL BE SUBJECT TO FULL LEGAL ENFORCEMENT. ANY ALTERAT

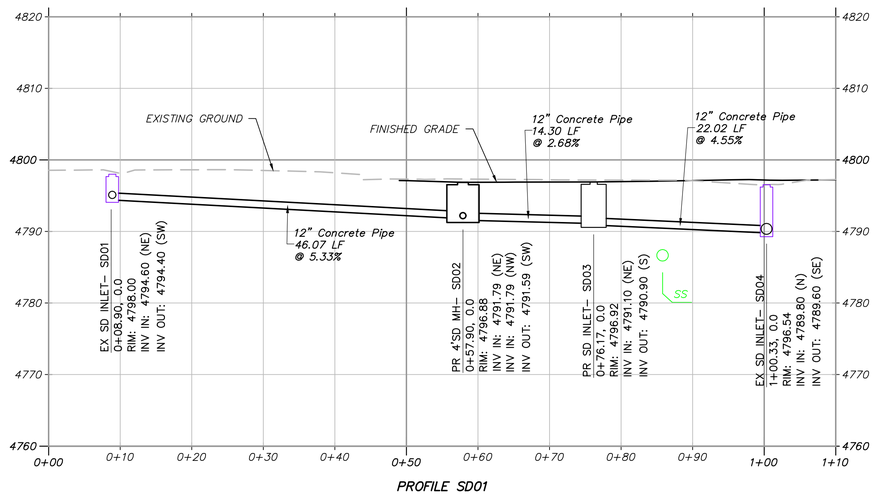

PROFILE SD01

SCALE
HORIZONTAL: 1" = 10'
0 2.5' 5' 10' 15'

SCALE
VERTICAL: 1" = 10
0 2.5 5 10 15

ALL IDEAS, DESIGNS, ARRANGEMENTS AND PLANS INDICATED OR REPRESENTED BY THIS DRAWING ARE OWNED BY AND THE PROPERTY OF AJC ARCHITECTS PC AND WERE CREATED, EVOLVED, AND DEVELOPED FOR USE ON AND IN CONNECTION WITH THE SPECIFIED PROJECT. NONE OF THE IDEAS, DESIGNS, ARRANGEMENTS OR PLANS SHALL BE USED BY OR DISCLOSED TO ANY PERSON, FIRM OR CORPORATION FOR ANY PURPOSE WHATSOEVER WITHOUT THE PRIOR WRITTEN CONSENT OF AJC ARCHITECTS PC. VISUAL CONTACT WITH THESE DRAWINGS SHALL CONSTITUTE PRIMA FACIE EVIDENCE OF ACCEPTANCE OF THESE RESTRICTIONS. ALL DIMENSIONS SHOWN ON THESE DRAWINGS ARE TO BE VERIFIED BY THE CONTRACTOR PRIOR TO THE START OF ANY CONSTRUCTION. CONTRACTOR SHALL NOTIFY AJC ARCHITECTS PC AND THIS OFFICE MUST BE NOTIFIED OF ANY VARIATION FROM THE DIMENSIONS AND CONDITIONS SHOWN BY THESE DRAWINGS. CONTRACTOR SHALL VERIFY AND BE RESPONSIBLE FOR ALL DIMENSIONS AND CONDITIONS ON THE JOB AND THIS OFFICE MUST BE NOTIFIED OF ANY VARIATION FROM THE DIMENSIONS AND CONDITIONS SHOWN BY THESE DRAWINGS. REPRODUCTION HEREOF IS A CRIMINAL OFFENSE UNDER 18 U.S.C. SEC. 506. UNAUTHORIZED DISCLOSURE MAY CONSTITUTE TRADE SECRET MISAPPROPRIATION IN VIOLATION OF U.C.A.-2-31-1 ET. SEQ. AND OTHER LAWS.

ajc architects
703 east 1700 south
salt lake city, ut 84105
ajcarchitects.com

CIVIL ENGINEER

TALISMAN
CIVIL CONSULTANTS
1588 SOUTH MAIN STREET
SUITE 200
SLAT LAKE CITY, UT 84115
801.743.1300

AUTHORITY HAVING JURISDICTION

REGISTERED PROFESSIONAL ENGINEER
No. 7819402-2202
JOSEPH R. PALMER
5/9/20
STATE OF UTAH

PROJECT DESCRIPTION

U of U - DUMKE GYMNASTICS BUILDING REMODEL

1825 E. SOUTH
CAMPUS DRIVE
SALT LAKE CITY
UTAH 84112

SHEET NAME:

UTILITY PLAN

REVISIONS

MARK	DATE	DESCRIPTION

ISSUE DATE:	5-08-2020
ISSUE TYPE:	CD
DRAWN BY:	TB
CHECKED BY:	JP
PROJECT#:	1877.01

SHEET NUMBER:

C401

Precast manhole

1. **GENERAL**
   A. The drawing shows typical pipe connections. Refer to construction drawings for connection locations or refer to field location of existing piping when engineering pipe connection to the manhole.
   B. Manhole size.
      1) Diameter is 4 feet: For pipe under 12" diameter.
      2) Diameter is 5 feet: For pipe 12" and larger, or when 3 or more drain pipes intersect the manhole.
   C. Wall thickness:
      1) Precast reinforced concrete walls 4 3/4" minimum.
      2) Cast-in-place concrete to be 8 inches thick minimum.
2. **PRODUCTS**
   A. Base Course: Untreated base course, APWA Section 32 11 23. Do not use gravel as a base course without ENGINEER's permission.
   B. Backfill: Common fill, APWA Section 31 05 13. Maximum particle size 2-inches.
   C. Concrete: Class 4000, APWA Section 03 30 04.
   D. Riser and Reducing Riser: Reinforced concrete pipe, Class III, ASTM C478.
   E. Joint Sealant: Rubber based, compressible.
   F. Grout: 2 parts sand to 1 part cement mortar.
3. **EXECUTION**
   A. Foundation Stabilization: Get ENGINEER's permission to use a sewer rock or pea gravel to stabilize an unstable foundation.
   B. Base Course Placement: APWA Section 32 11 23. Maximum lift thickness is 8-inches before compaction. Compaction is 95 percent or greater relative to a modified proctor density, APWA Section 31 23 26.
   C. Invert cover. During construction, place invert covers over the top of pipe in manholes that currently convey sewerage. See Plan 412.
   D. Concrete Deck or Reducing Riser: When depth of manhole from pipe invert to finish grade exceeds 7 feet, use an ASTM C478 reducing riser cone.
   E. Pipe Connections: Grout around all pipe openings.
   F. Water Stops: Install rubber-based water-stops on all plastic pipes when connecting plastic pipes to manholes. Hold water-stop in place with stainless steel bands.
   G. Joints: Place flexible sealant in all joints. Finish with grout.
   H. Finish: Provide smooth and neat finishes on interior of cones, shafts, and rings. Imperfect moldings or honeycombs will not be accepted.
   I. Backfill: Provide backfill against the manhole shaft. Pea gravel and recycled RAP aggregate is NOT ALLOWED. Water jetting is NOT allowed. Maximum lift thickness is 8-inches before compaction. Compaction is 95 percent or greater relative to a standard proctor density, APWA Section 31 23 26.

Trench backfill

1. **GENERAL**
   A. The drawing applies to backfilling a trench (and embankment) above the pipe zone.
2. **PRODUCTS**
   A. Backfill: Common fill, APWA Section 31 05 13. Maximum particle size 3-inches.
   B. Flowable Fill: APWA Section 31 05 15. Target is 60 psi in 28 days with 90 psi maximum in 28 days, It must flow easily requiring no vibration for consolidation.
3. **EXECUTION**
   A. Trench Backfill Above the Pipe Zone: Follow requirement indicated in APWA Section 33 05 20 and the following provisions. See Standard Plan 382 for backfilling the pipe zone.
      1) DO NOT USE sewer rock, pea gravel, or recycled RAP aggregate as trench backfill.
      2) Maximum lift thickness is 8-inches before compaction. Compaction is 95 percent or greater relative to a standard proctor density, APWA Section 31 23 26.
      3) Water jetting is NOT allowed.
   B. Flowable Fill: If controlled low strength material is placed in the trench. Cure the material before placing surface restorations.
   C. Embankment Backfill: When trench sides are sloped proceed as follows.
      1) Maximum lift thickness is 8-inches before compaction.
      2) Compact per APWA Section 31 23 26 to 95 percent or greater relative to a standard proctor density.
      3) Submission of quality control compaction test result data may be requested by ENGINEER at any time. Provide results of tests immediately upon request.
   D. Surface Restoration:
      1) Landscaped Surface: Follow APWA Section 32 92 00 (turf or grass) or APWA Section 32 93 13 (ground cover) requirements. Rake to match existing grade. Replace vegetation to match pre-construction conditions.
      2) Paved Surface: Follow APWA Section 33 05 25 (bituminous pavement surfacing), or APWA Section 33 05 25 (concrete pavement surfacing). Do not install surfacing until compaction density is acceptable to ENGINEER. .

Pipe zone backfill

1. **GENERAL**
   A. Install the pipe in the center of the trench or no closer than 6-inches from the wall of the pipe to the wall of the trench.
2. **PRODUCTS**
   A. Base Course: Untreated base course, APWA Section 32 11 23. Do not use gravel as a base course without ENGINEER's permission.
   B. Backfill: Common fill, APWA Section 31 05 13. Maximum particle size 2-inches.
   C. Concrete: APWA Section 03 30 04.
   D. Flowable Fill: Target is 60 psi in 28 days with 90 psi maximum in 28 days, APWA Section 31 05 15. It must flow easily requiring no vibration for consolidation.
   E. Stabilization-Separation Geotextile: Moderate or high at CONTRACTOR's choice, APWA Section 31 05 19.
3. **EXECUTION**
   A. Excavate the Pipe Zone: Width is measured at the pipe spring line and includes any necessary sheathing. Provide width recommended by pipe manufacturer. Follow manufacturer's recommendations when using trench boxes.
   B. Foundation Stabilization: Get ENGINEER's permission before installing common fill. Vibrate to stabilize. Installation of stabilization-separation geotextile will be required to separate backfill material and native subgrade materials if common fill cannot provide a working surface or prevent soils migration.
   C. Bedding: Follow APWA Section 33 05 20 requirements and the following provisions.
      1) Furnish untreated base course material unless specified otherwise by pipe manufacturer.
      2) Maximum lift thickness is 8-inches.
      3) Bedding immediately under the pipe should not be compacted, but loosely placed.
      4) Compaction is 95 percent or greater relative to a modified proctor density, APWA Section 31 23 26.
      5) When using concrete, provide at least Class 2,000, APWA Section 03 30 04.
   D. Pipe Zone: DO NOT USE sewer rock, pea gravel, or recycled RAP aggregate in the pipe zone. Water jetting is NOT allowed.
      1) Maximum lift thickness is 8-inches before compaction. Compaction is 95 percent or greater relative to a modified proctor density, APWA Section 31 23 26 unless pipe manufacturer requires more stringent installation.
      2) Submission of quality control compaction test result data developed for the haunch zone may be requested by ENGINEER at any time. CONTRACTOR is to provide results of tests immediately upon request.
   E. Flowable Fill (when required and if allowed by pipe manufacturer):
      1) Place the controlled low strength material, APWA Section 31 05 15.
      2) Prevent pipe flotation by installing in lifts and providing pipe restraints as required by pipe manufacturer.
      3) Reset pipe to line and grade if pipe "floats" out of position.

341.2

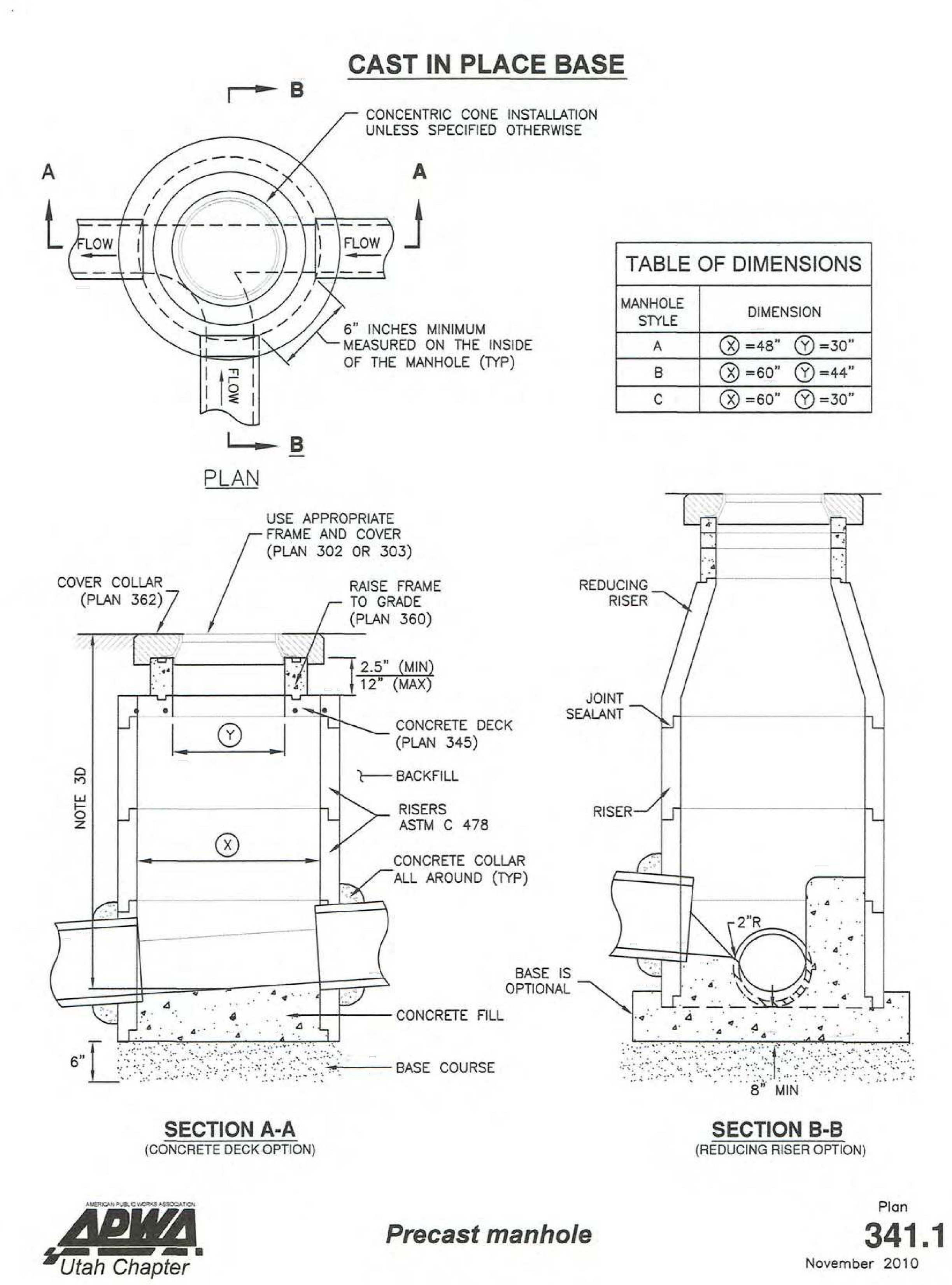

381

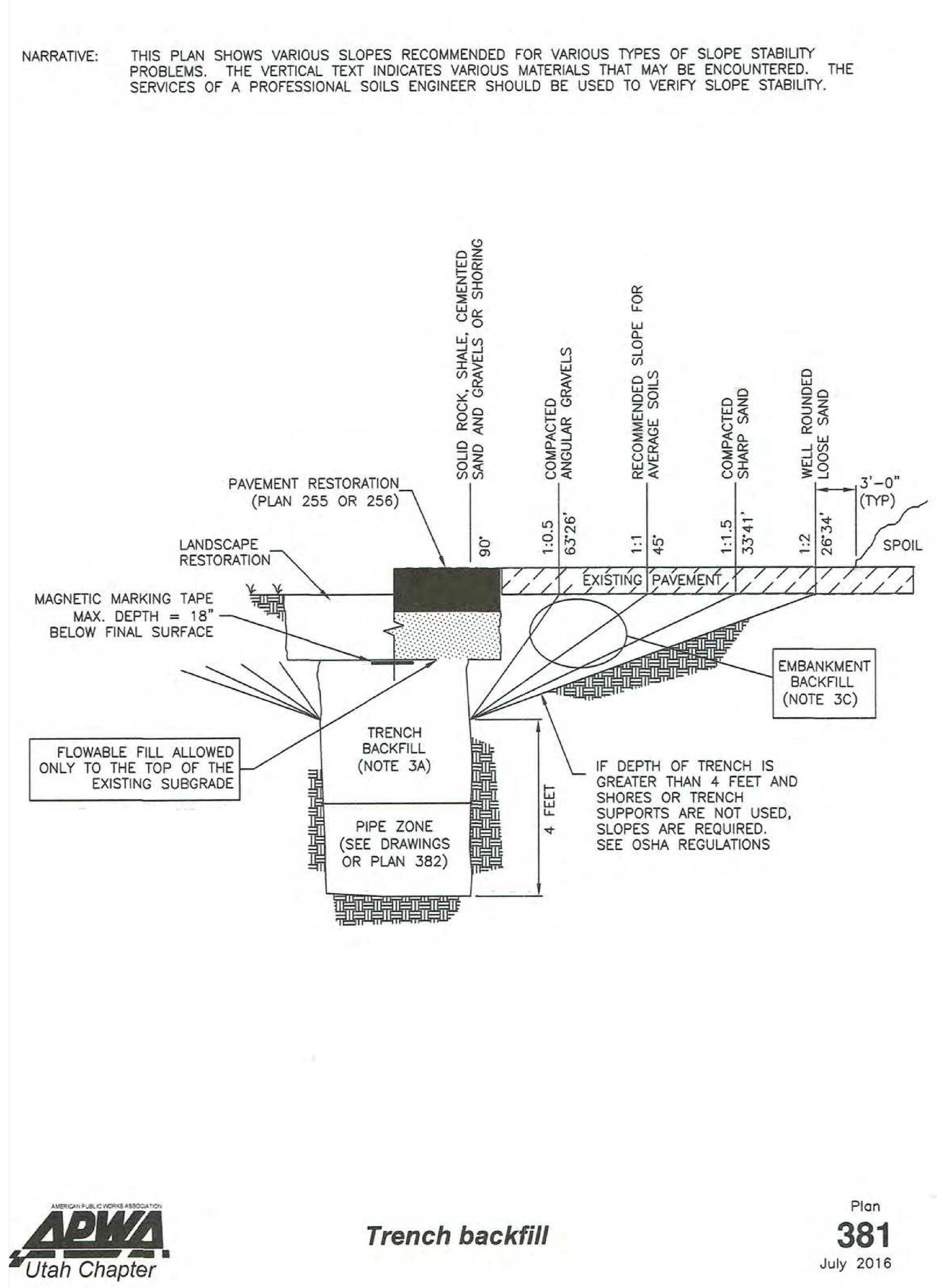

382

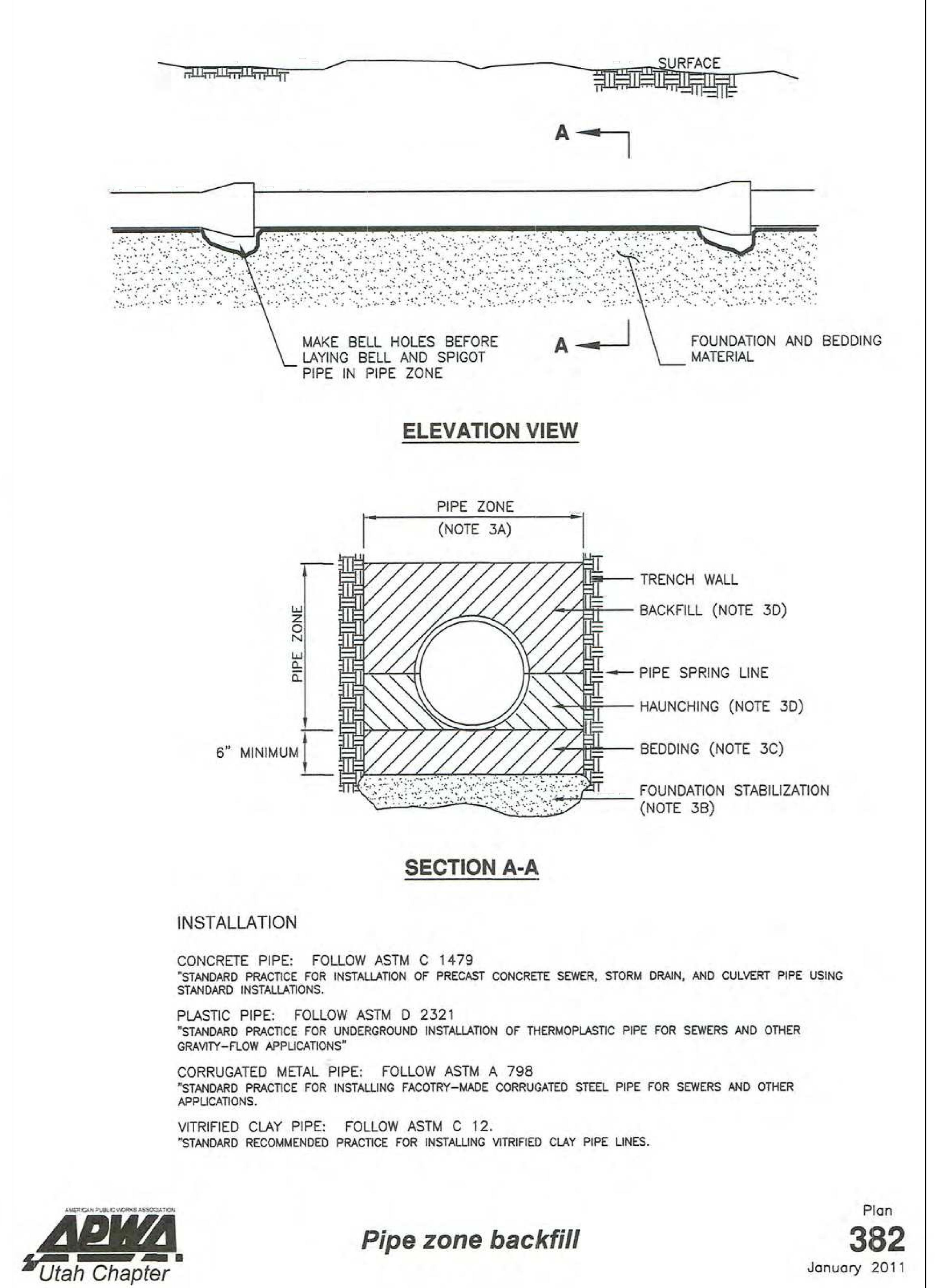

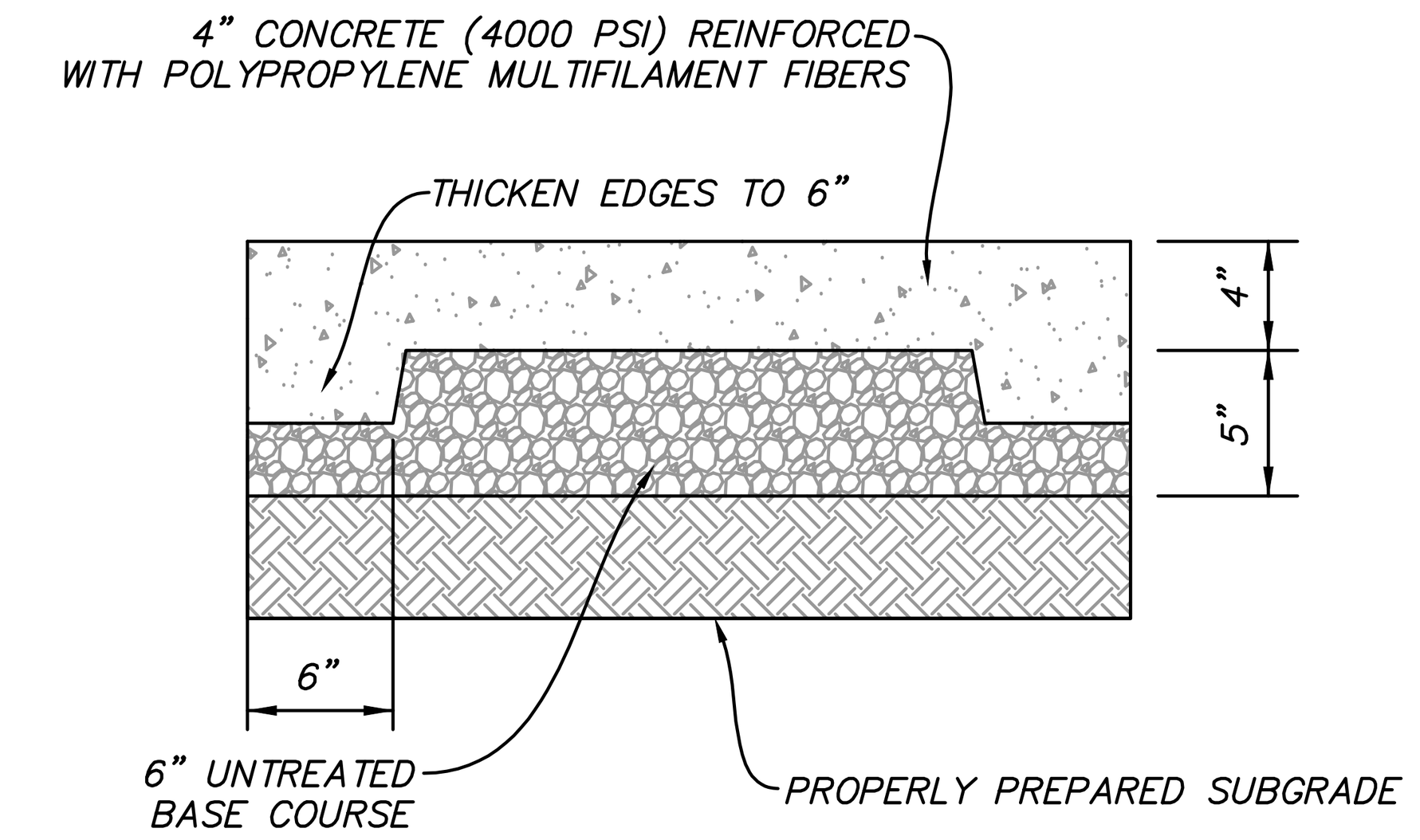

NOTE:
EXPANSION AND CONTRACTION JOINTS ARE TO BE PLACED PER APWA STANDARD PLAN NO. 231 FOR LONGITUDINAL WALKWAYS, AND ON A 10' GRID SPACING (CONTRACTION JOINTS) AND 50' GRID SPACING (EXPANSION JOINTS) IN PLAZA AREAS.

A — PEDESTRIAN CONCRETE PAVEMENT SECTION

SCALE: N.T.S.

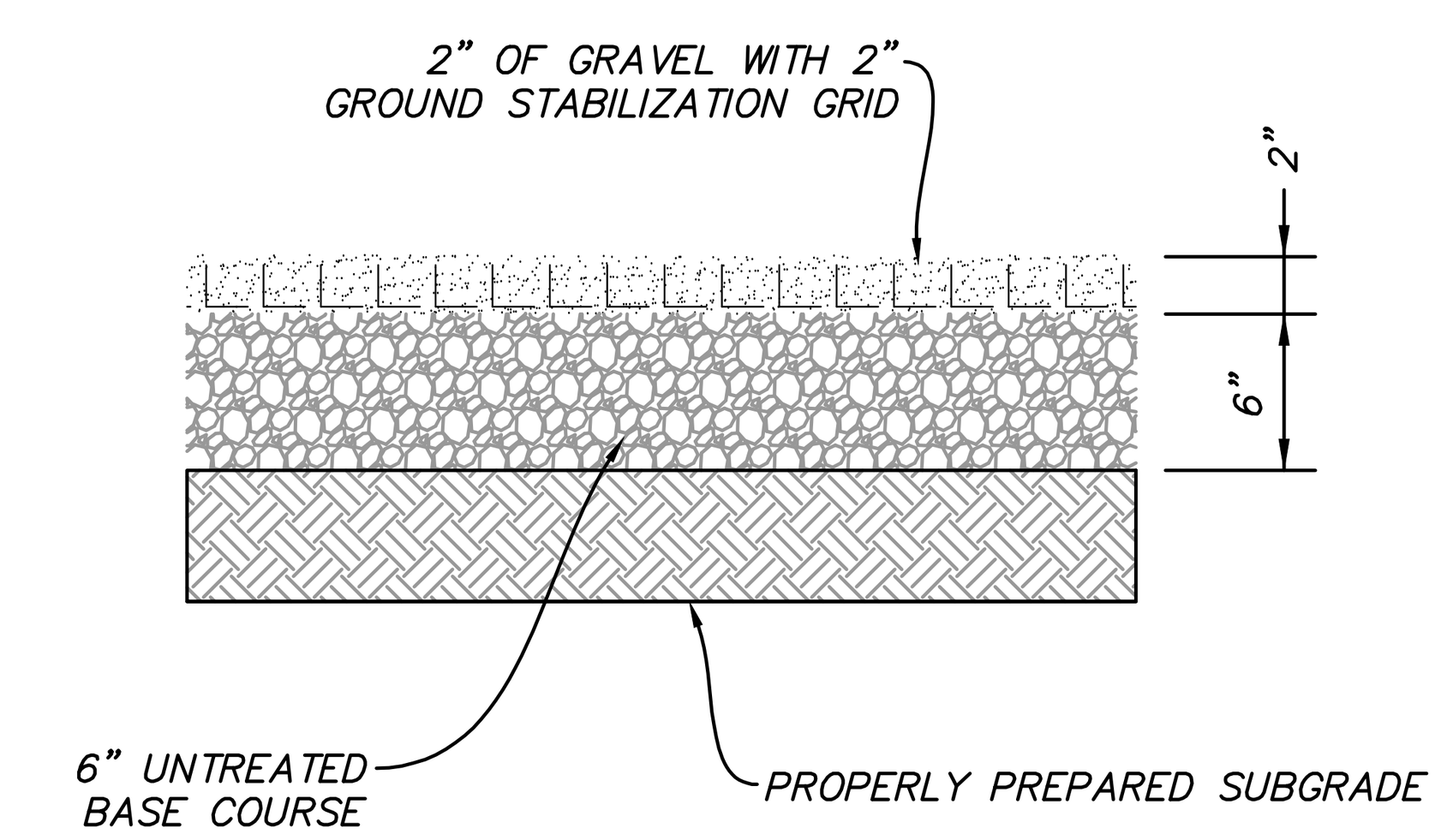

B — REINFORCED GRAVEL PATH

SCALE: N.T.S.

ajc architects
703 east 1700 south
salt lake city, ut 84105
ajcarchitects.com

CIVIL ENGINEER

TALISMAN CIVIL CONSULTANTS
1588 SOUTH MAIN STREET
SUITE 200
SLAT LAKE CITY, UT 84115
801.743.1300

AUTHORITY HAVING JURISDICTION

REGISTERED PROFESSIONAL ENGINEER
JEFFREY R. PALMER
5/8/20
STATE OF UTAH

PROJECT DESCRIPTION

U of U - DUMKE GYMNASTICS BUILDING REMODEL

1825 E. SOUTH
CAMPUS DRIVE
SALT LAKE CITY
UTAH 84112

SHEET NAME:

DETAILS

REVISIONS

MARK	DATE	DESCRIPTION

ISSUE DATE:	5-08-2020
ISSUE TYPE:	CD
DRAWN BY:	TB
CHECKED BY:	JP
PROJECT#:	1877.01

SHEET NUMBER:

C700

ALL IDEAS, DESIGNS, ARRANGEMENTS AND PLANS INDICATED OR REPRESENTED BY THIS DRAWING ARE OWNED BY AND THE PROPERTY OF AJC ARCHITECTS PC AND WERE CREATED, EVOLVED, AND DEVELOPED FOR USE ON AND IN CONNECTION WITH THE SPECIFIED PROJECT. NONE OF THE IDEAS, DESIGNS, ARRANGEMENTS OR PLANS SHALL BE USED BY OR DISCLOSED TO ANY PERSON, FIRM, OR CORPORATION FOR ANY PURPOSE WHATSOEVER WITHOUT WRITTEN CONSENT OF AJC ARCHITECTS PC. WRITTEN DIMENSIONS ON THESE DRAWINGS SHALL HAVE PRECEDENCE OVER SCALE DIMENSIONS. CONTRACTORS SHALL VERIFY AND BE RESPONSIBLE FOR ALL DIMENSIONS AND CONDITIONS ON THE JOB AND THIS OFFICE MUST BE NOTIFIED OF ANY VARIATION FROM THE DIMENSIONS AND CONDITIONS SHOWN BY THESE DRAWINGS. WARNING: REPRODUCTION HEREOF IS A CRIMINAL OFFENSE UNDER 18 U.S.C. SEC. 506. UNAUTHORIZED DISCLOSURE MAY CONSTITUTE TRADE SECRET MISAPPROPRIATION IN VIOLATION OF I.C.24-2-31-1 ET. SEQ. AND OTHER LAWS.

1. Design Criteria

1.1. Governing Building Code
- A. 2018 International Building Code (IBC) / International Existing Building Code (IEBC)
  1. Risk Category III
- B. ASCE 41-17, Seismic Evaluation and Retrofit of Existing Buildings
- C. Existing Building Drawings Dated: 1998

1.2. Floor Live Loading
- A. Office .... 80 psf Live Load + 20 psf Partition Load
- B. Exit Facilities & Corridors .... 80 psf Live Load (100 psf at First Floor)

1.3. Roof Live Loading
- A. Roof Live Load .... 20 psf
- B. Roof Snow Load .... 30 psf + Drift per IBC
  1. Ground Snow Load, P_g .... 39 psf
  2. Snow Exposure Factor, C_e 1.0
  3. Importance Factor, I_s 1.1
  4. Thermal Factor, C_t 1.0
  5. Slope Factor, C_s 1.0
- C. Roof Rain Load Intensity, i .... 4.24 in./hr (15 min. duration, 100-year interval)

1.4. Earthquake
- A. Structural Performance Objectives per ASCE 41-17:
  1. Damage Control (S-2), BSE-1N
  2. Limited Safety (S-4), BSE-2N
- B. Seismic Design Category .... D
- C. Design Basis: Spectral Response Accelerations, BSE-2N (MCR 2%/50yr) per ASCE 41-17
  S_S = 1.295 g S_{XS} = 1.554 g
  S_1 = 0.48 g S_{X1} = 0.72 g
- D. For Information Only: Spectral Response Accelerations, BSE-1N (2/3 MCR) per ASCE 41-17
  S_S = 0.863 g S_{XS} = 1.036 g
  S_1 = 0.32 g S_{X1} = 0.48 g
- E. For Information Only: Spectral Response Accelerations per ASCE 7-16
  S_S = 1.295 g S_{DS} = 1.036 g
  S_1 = 0.48 g S_{D1} = 0.48 g
- F. Soil Site Class per ASCE 7-16 C
  F_a = 1.2 F_v = 1.5
- G. Basic Seismic-Force-Resisting System .... Special reinforced masonry shear walls
- H. Importance Factor, I_e 1.25
- I. Analysis Procedure .... Linear Dynamic
- J. Design Base Shear (ASCE 41-17, BSE-2N)
  1. 913 kips SW/NE (Southwest/Northeast)
  2. 1324 kips SE/NW (Southeast/Northwest)
- K. Building Seismic Movement from BSE-2N Hazard Level

Level	Total Displacement		Story Drift	
	SW/NE	SE/NW	SW/NE	SE/NW
Roof	in	in	in	in
Level 2	0.06	1.05	0.06	1.05
Base	0.01	0.05	0.01	0.05

1.5. Wind
- A. Basic Design Wind Speed, V .... 109 mph
- B. Velocity pressure exponent coefficient, K_d 0.85
- C. Ground elevation factor, K_e 0.84
- D. Exposure category C
- E. Internal Pressure Coefficient, GC_{pi} 0.18
- F. Topographic Factor, K_{zt} 1.0
- G. Components and Cladding Design Pressure

Design Wind Pressure - LRFD (psf)					
Location		Tributary Area (ft²)			
		< 10	50	100	> 500
Walls	Within 16.2 ft of building corner	29.9	25.3	23.3	18.7
Roof	All other areas	24.3	22.0	21.0	18.7
	Zone 3: Within 16.2 ft "L" shape at building corner	70.2	54.8	48.2	32.8
	Zone 2: Within 16.2 ft of building edge	51.5	43.8	40.5	32.8
	Zone 1: Within 32.4 to 16.2 ft of building edge	39.0	33.1	30.5	24.5
	Zone 1': All other areas	22.4	22.4	22.4	16

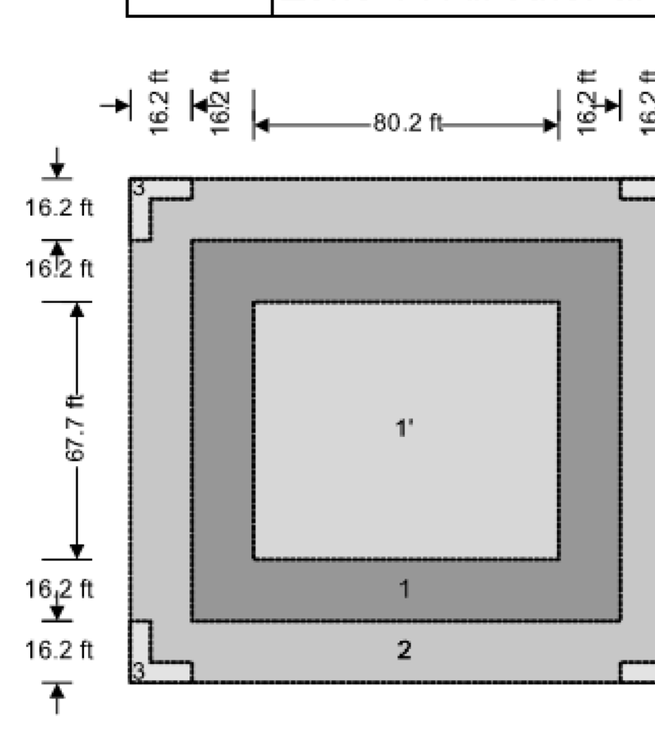

Plan on roof

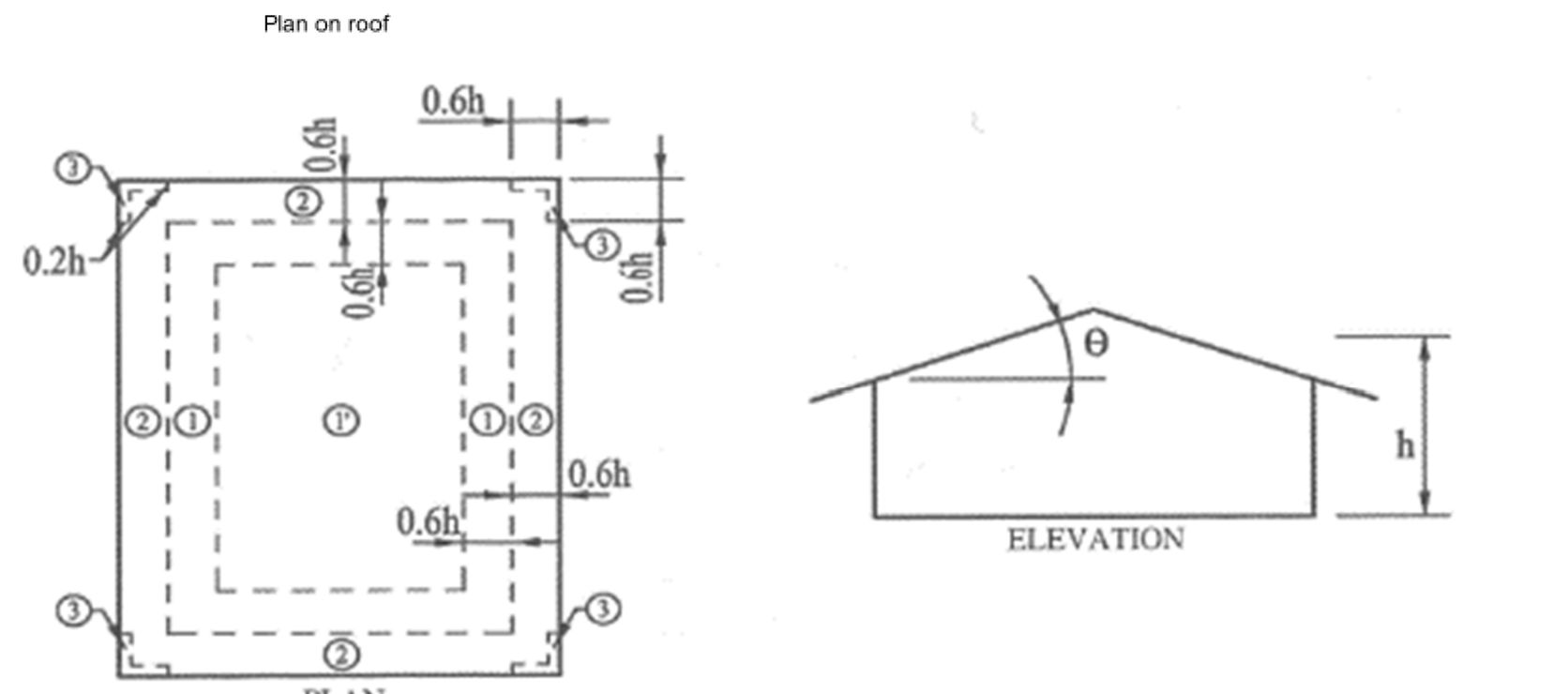

(from ASCE 7-16, Figure 30.3-2A)

1.6. Foundation
- A. Subsurface Conditions:
  Soils report and log of borings was obtained by the Owner for the Engineer's use in the design of the foundation and is not a part of the Contract Documents. This report and log of borings is available for the Contractor's information but is not a warranty of the subsurface conditions. The Contractor may use the report at their own risk.
- B. Soils Report by Consolidated Engineering Laboratories, dated April 4,2020 and Geotechnical Report Addendum 1, dated April 8, 2020.
- C. Soil Bearing Pressure: .... 2,500 psf on compacted fill.
- D. Lateral Soil Pressure Fluid Equivalent Density.
  1. Active: .... 35 pcf (retaining walls)
  2. At Rest: .... 52 pcf (rigid foundation walls)
  3. Passive: .... 442 pcf
- E. Coefficient of Friction: 0.35

1.7. Classification for Fire Rated Construction
- A. For the purpose of determining fire-resistive assemblies, the following framing systems shall be considered unrestrained.
  1. Open web steel framing members supporting metal decking.
  2. Single span and simply supported end spans of multiple bays that are supported by bearing walls:
     a. Steel beams supporting concrete slabs, metal decking, or precast concrete units.
     b. Open web steel joists supporting concrete slabs or precast concrete units.
     c. Concrete slabs, precast concrete units, or metal decking.
  3. Interior spans of multiple bays supported by bearing walls:
     a. Steel beams supporting metal decking or precast concrete units.
     b. Open web steel joists supporting precast concrete units.
- B. All other steel floor and roof framing members shall be considered restrained.
- C. Diagonal members in vertical braced frames shall be considered as secondary members for fire proofing protection.

2. Earthwork

Clearing: The entire building area shall be scraped to remove the top 4 inches of soil, including all vegetation and debris.

2.1. Undocumented fills should be removed from beneath all new building footings, extensions, and interior and exterior slabs-on-grade down to suitable native fill and replaced with Structural Fill beneath footings, or Engineered Fill, beneath slabs-on-grade or other structures. Structural Fill should extend laterally past the edge of the building footing foundation an equal distance as the thickness of the Structural Fill. Fill materials should meet the requirements provided in Section 5.2.2 of the geotechnical report. Structural and Engineered Fill should be placed and compacted in accordance with the recommendations provided in the geotechnical report.

2.2. Project Compaction Requirements should follow geotechnical report, Section 5.2.4.

2.3. It shall be the responsibility of the Contractor to brace and shore excavations as required.

3. Concrete

3.1. Materials shall comply with the Standards specified in American Concrete Institute (ACI) 318-14, "Building Code Requirements for Structural Concrete."
- A. Concrete mix design requirements shall be as follows:

Location	f'c at 28 days (psi)	Max W/C Ratio	Air Content (%)	Max Aggregate Size	Exposure Classes*		
					F	S	C
Footings	3000	0.50	-	1"	F0	S0	C0
Interior Slabs on Grade	3000	0.45	-	1"	F0	S0	C0
Exterior Walls	4500	0.45	6	¾"	F1	S0	C1
Walls	4000	0.45	-	¾"	F0	S0	C0
Exterior Columns	4500	0.45	6	¾"	F1	S0	C1
Columns	4000	0.45	-	¾"	F0	S0	C0
Joist, Beams and Suspended Slabs	4000	0.45	-	¾"	F0	S0	C0
Concrete over Steel Deck	3000	0.45	-	¾"	F0	S0	C0
All other site cast concrete	4500	0.45	6	1"	F1	S0	C1

* Exposure Classes are per ACI 318, Section 19.3.1.1, where F, S and C are exposure categories for freezing and thawing, sulfate, and corrosion protection of reinforcement, respectively.

- B. Cementitious Materials:
  1. Portland Cement (ASTM C150):
     a. Type I or II for exposure class S0.
     b. Type II or V for exposure class S1.
     c. Type V for exposure class S2 and S3.
  2. Fly Ash (ASTM C618, Class C or F): maximum fly ash content as a percentage of total weight of cementitious materials shall be 25 percent.
- C. Concrete Density (Maximum Air Dry Weight):
  1. Normal weight concrete shall be approximately 145 to 155 pounds per cubic foot. Aggregate shall be ASTM C33.
- D. Steel Reinforcement:
  1. ASTM A615 Grade 60, fy = 60,000 psi min. unless noted otherwise.
- E. Wire Reinforcement:
  1. Welded wire fabric (WWF): ASTM A1064.
- F. Fiber Reinforcement:
  1. Synthetic Micro-Fiber: fibrillated polypropylene micro-fibers engineered and designed for use in concrete, complying with ASTM C 1116, 1/2 to 1-1/2 inches long. Add to concrete at a dosage rate of 1.5 lb/cu yd where indicated.
  2. Macrosynthetic Fibers: monofilament, non-fibrillating fibers made of a polypropylene/polyethylene blend. Macro fibers shall comply with ASTM C 1116, Type III, and meet the criteria of ASTM D 7508.
     a. Where noted in the Steel Deck Schedule, macrosynthetic fibers shall be added to concrete over steel deck at a dosage rate determined by the fiber manufacturer but not less than 4 lb/cu yd.
     b. Do not burn off exposed fibers.
- G. Admixtures:
  1. Air-entraining admixtures, comply with ASTM C 260 (when used).
     a. Tolerance on air content as delivered shall be +/- 1.5%.
     b. When air content of a trowel finished floor slab exceeds 3%, there is an increased risk for delaminations and blistering to occur. When this situation is present, the Contractor shall pay special attention to the finishing procedures to help minimize such risks. Refer to ACI 302.1R-15 "Guide for Concrete Floor and Slab Construction" for proper finishing guidelines.
  2. The use of super plasticizers and water reducers is allowed, but not required.
  3. Calcium chloride or admixtures containing calcium chloride shall not be added to the concrete mix.
- H. Chloride Ion: Maximum water soluble chloride ion concentrations in hardened concrete at age between 28 and 42 days contributed from the ingredients including water, aggregates, cementitious materials, and admixtures shall not exceed a maximum, by weight of cement, of 1.00% for concrete with exposure class C0, 0.30% for concrete with exposure class C1, and 0.15% for concrete with exposure class C2.
- I. Slump Limit: 4 inches, maximum for all concrete prior to the addition of plasticizers and water reducing admixtures. The concrete supplier shall indicate the final slump of each concrete mix in the submitted mix design.
- J. Shrinkage Limit: Interior slabs on grade shall have a drying shrinkage limit of 0.040 percent tested in accordance with ASTM C157. Drying shrinkage test results shall be submitted with mix designs.
- K. Only one grade or type of concrete shall be poured on the site at any given time.

3.2. Formwork shall comply with ACI Standards Publication 347 and the project specifications. The Contractor shall be responsible for the design, detailing, care, placement and removal of the formwork and shores.
- A. Pre-camber forms and screeds with a camber of 1/4" per every 10'-0" of span to compensate for dead load deflection, unless noted otherwise. Post tensioned concrete slabs and beams do not require formwork to be pre-cambered.

3.3. Concrete cover requirements for deformed bar reinforcing steel shall comply with ACI 318, "Building Code Requirements for Structural Concrete".
- A. Cast-in-place Concrete: Specified Cover
  1. Cast against and permanently exposed to earth: .... 3"
  2. Formed concrete exposed to earth or weather:
     #6 thru #18 bars .... 2"
     #5 and smaller bars .... 1.1/2"
  3. Concrete not exposed to weather or in contact with ground:
     Slabs, Walls, Joists; #11 bars and smaller .... 3/4"
     Beams, Columns: primary reinforcement, ties, stirrups, spirals .... 1.1/2"

3.4. Construction Joints and Control Joints:
- A. Provide a surface intentionally roughened to ¼" amplitude in all wall footings. A continuous keyway shall not be used for concrete shear wall to footing connections, unless specifically indicated. Refer to project plans, schedules and details for the shear wall to footing connection requirements.
- B. All horizontal and vertical construction joints shall have a surface intentionally roughened to ¼" amplitude. A continuous 2 X 4 keyway may be used on elements other than shear walls.
- C. Provide reinforcement dowels to match the member reinforcement across the joint, unless noted otherwise. For dowels across construction joints and wall to footing connections of concrete shear walls, refer to specific project plans, schedules, and details.
- D. Construction joints in suspended concrete pours shall be made at the center of spans.
- E. Slabs on grade shall have construction or control joints spaced not to exceed 30 times the slab thickness in any direction.
- F. Control joints shall be installed in slabs on grade so the length to width ratio of the slab is no more than 1.25:1. Control joints shall be completed within 12 hours of concrete placement. See typical details for joint configuration.
- G. Control joints in visually exposed walls, unless noted otherwise: (Joints shall line up with masonry and architectural joints, see drawings.)
  1. Vertical control joints at 10'-0" on center.
  2. Reinforcing shall be continuous through control and construction joints, unless noted otherwise.
  3. Control joints in concrete foundation walls shall line up with masonry control joints.
- H. Control joints shall be installed in concrete slabs over steel deck by saw-cutting along girders and purlins at interior grid lines. See typical details for joint size and reinforcement. Reinforcement required shall be in addition to any slab reinforcement.

3.5. Detailing: All reinforcing, including welded wire fabric, shall be detailed, bolstered & supported to comply with ACI 315, "Details and Detailing of Concrete Reinforcement" and the Concrete Reinforcing Steel Institute (CRSI) recommendations. Reinforcing bars shall not be welded unless specifically shown on drawings.
- A. All reinforcing shall be developed in compliance with the CONCRETE REINFORCING BAR DEVELOPMENT AND LAP SPLICE SCHEDULE. As indicated in the drawings or upon approval of the engineer of record, standard tension hooks or headed bars described by the TENSION HOOK DEVELOPMENT SCHEDULE or the TENSION HEADED BAR DEVELOPMENT SCHEDULE may be used in lieu of straight bars.
- B. All mechanical splices shall have the capacity to develop at least 1.25fy of the bar in tension or compression. Type 2 couplers have the capacity to develop the full tension capacity of the bar. Type 1 couplers shall not be used in moment frames and shear wall jamb columns. Mechanical splices shall have a current ICC or IAPMO code evaluation report; "Lenton" (IAPMO No. 0129), "Taper-Lock" (IAPMO No. 0319) or "SAS Stressteel" (ICC ESR-1163), "Bar-Lock" (ICC ESR-2495) or approved equivalent may be used. Mechanical couplers on adjacent bars shall be staggered a minimum of 24" apart along the longitudinal axis of the reinforcing bars.
- C. All embedded elements and dowels shall be securely tied to formwork or to adjacent reinforcing prior to the placement of concrete.
- D. Use chairs or other support devices recommended by CRSI to support and tie reinforcement bars and welded wire fabric prior to placing concrete. Welded wire fabric shall be continuously supported at 36" o.c. maximum.
- E. See typical details for reinforcing at wall intersections and ends, reinforcing around wall openings and suspended slab openings, vertical wall dowels, concrete column ties and splices in vertical column reinforcing.
- F. See typical details for column cross-ties. The 90-degree hooks of two successive crossties engaging the same longitudinal bars shall be alternated end for end.
- G. Where required, reinforcement is to be terminated in a standard hook or headed bar anchor. Refer to the TENSION HOOK DEVELOPMENT SCHEDULE, the TENSION HEADED BAR DEVELOPMENT SCHEDULE and the REINFORCEMENT END HOOK SCHEDULE as appropriate. Unless otherwise noted, a standard hook or headed bar are equivalent and may be substituted at the Contractor's option.
- H. Contractor shall coordinate placement of all openings, curbs, dowels, sleeves, conduits, bolts, inserts and other embedded items prior to concrete placement.
- I. All reinforcement shall be bent cold, and shall be bent only once at the same location. All reinforcement shall be shop bent, unless otherwise permitted by the Engineer.

3.6. Minimum Reinforcing: Wall reinforcing shall be as follows, unless noted otherwise:

Wall Thickness	Horizontal Reinforcing	Vertical Reinforcing
6"	#4 @ 13" o.c.	#4 @ 18" o.c.
8"	#5 @ 15" o.c.	#4 @ 16" o.c.
10"	#5 @ 12" o.c.	#4 @ 13" o.c.
12"	#4 @ 13" o.c. Each Face	#4 @ 18" o.c. Each Face
Others	0.25% of Wall Area	0.15% of Wall Area

Spacing shall exceed neither three times the wall thickness nor 18". In addition to the above reinforcing, 2 - #5 x continuous horizontal bars shall be placed at the bottom of the wall (near the footing) and at each floor level, at the roof level and at the top of wall.

3.7. No aluminum conduit or product containing aluminum or any other material injurious to concrete shall be embedded in concrete.

3.8. Unless otherwise noted, all slabs on grade shall be 4" thick.

4. Masonry

4.1. Materials shall comply with the Standards specified in TMS 402-16 and TMS 602-16, "Building Code Requirements and Specification for Masonry Structures."
- A. Materials, unless noted otherwise:
  1. Hollow Clay Units: Hollow Brick, ASTM C652, Grade SW.
  2. Material Strength: The Prism Test Method or the Unit Strength Method according to TMS 602-16 Section 1.4B may be used to determine the compressive strength of masonry assemblies. The contractor shall select the desired method and meet the required material strengths as follows:
     a. Prism Test Method, TMS 602-16 Section 1.4B.3:
        1) Hollow Clay Unit Assembly, f'm = 2500 psi.
     b. Unit Strength Method, TMS 602-16 Section 1.4B.2:
        1) Hollow Clay Units, minimum unit strength of 6600 psi average or better. (f'm = 2500 psi)
  3. Mortar: Use Type "S" according to ASTM C270, proportion specification. Admixtures shall not be added to the mortar mix.
  4. Grout: For masonry assemblies with f'm = 2,000 psi or less conform to ASTM C476, proportion specification. Grout that does not meet the requirements of ASTM C476 proportion specification or that is used in masonry assemblies with f'm > 2,000 psi shall meet the following requirements: Meet the material requirements of ASTM C476, obtain a minimum compressive strength of f'm or 2,000 psi, whichever is larger, at 28 days tested according to ASTM C1019, and a slump of 8 in. to 11 in. as determined by ASTM C143.
     a. Self-Consolidating Grout: Conform to the material requirements of ASTM C476, obtain a minimum compressive strength of f'm or 2,000 psi, whichever is larger, at 28 days tested according to ASTM C1019, obtain a slump flow of 24 in. to 30 in. as determined by ASTM C1611, and shall have a Visual Stability Index less than or equal to 1 as determined in accordance with ASTM C1611 Appendix X.1. Field addition of admixtures is not permitted.
  5. Reinforcing: Grade 60 reinforcing steel shall comply with ASTM A615. Wire joint reinforcing shall comply with ASTM A951.
  6. Deformed Bar Anchors (DBA): All DBAs shall comply with ASTM A496.
  7. Anchor Bolts (AB): ASTM A307 with ASTM A563 heavy hex nuts and hardened washers, Grade A, unless noted otherwise.
  8. Headed Stud Anchors (HSA): Manufacture all HSAs in conformance with ASTM A108 with dimensions complying with AISC specifications.

4.2. Construction Requirements:
- A. Mortar Joints: Joints shall be "concave", "V-joint" or "weathered raked" for structural members unless noted otherwise on architectural drawings.
- B. Masonry walls, beams and columns shall be constructed with running bond, unless noted otherwise.
- C. Grouting Requirements: Comply with IBC Section 2104 and TMS 602 Section 3.5. Grout shall be mechanically consolidated and mechanically reconsolidated according to TMS 602 Section 3.5 E.
  1. Grout Pour Heights that exceed 4 feet shall meet the following requirements:
     a. Provide cleanouts in the bottom course of masonry for each grout pour in accordance with TMS 602 Section 3.2 F.
     b. For grout other than Self Consolidating Grout a demonstration panel representative of the proposed wall construction and construction procedures shall be provided and approved by the Architect. The demonstration panel may be a part of the completed construction as approved by the Architect.
     c. For Self-Consolidating Grout placed in masonry that has cured for at least 4 hours, place in lifts not exceeding the Maximum Grout Pour Height in listed in TMS 602 Section 3.5C.
  2. When grouting, form grout keys between grout pours. Form grout keys between grout lifts when the first lift is permitted to set prior to placement of the subsequent lift.
     a. Form a grout key by terminating the grout a minimum of 1.1/2 in. below a mortar joint.
     b. Do not form grout keys within beams.
     c. At beams or lintels laid with closed bottom units, terminate the grout pour at the bottom of the beam or lintel without forming a grout key.
- D. Reinforcing Bars shall not be welded unless specifically shown on drawings. In such cases, use only AWS standards. Do not substitute reinforcing bars for DBAs or HSAs.
- E. Control Joints: Spacing shall not exceed 40'-0" or 2.5 times the wall height, whichever is less. Joints shall not be located over masonry openings, and shall be a minimum of the schedule masonry column width away from masonry openings. See architectural drawings for locations.
- F. Grout all beam and joist pockets solid after installation of beams and joists.

4.3. Detailing Requirements:
- A. Standards: Reinforcing detailing shall comply with American Concrete Institute (ACI) Standard 315, "Details and Detailing of Concrete Reinforcement."
- B. Reinforcement Protection (cover):
  1. Joint reinforcement shall have not less than 5/8" mortar coverage from the exposed face.
  2. Other reinforcement shall have a minimum coverage of one bar diameter over all the bars, but not less than 3/4". When masonry is exposed to soil, minimum coverage shall be 1.5".
- C. Vertical steel reinforcement shall be placed and secured against displacement prior to grouting by wire positioners or other suitable devices: at intervals not exceeding the least dimension of the grout lift height, or bar splice locations, or 64". Vertical reinforcing shall be located at the center of the wall, unless noted otherwise.
- D. Lap Splice Lengths: Lap all masonry reinforcing bars per the "Masonry Reinforcing Bar Lap Splice Schedule." Joint reinforcement shall lap a minimum of 6".
- E. Corner Bars: Horizontal reinforcement shall be continuous at all corners and at intersecting walls. Provide corner bars with the required lap splice length.
- F. Dowels: All vertical reinforcing shall be doweled to the foundation wall, footing (structure below) and to the structure above with the same size dowel, spacing (and in the same core) as the vertical wall reinforcing unless noted otherwise.
- G. Wall Openings 24" wide and wider: Provide reinforced masonry lintels per Masonry Lintel Schedule over the top of, and 2 - #5 bars, in grouted spaces, on all sides and adjacent to every unscheduled opening, unless noted otherwise. Bars for all openings shall extend a minimum of 24" beyond the corners of the opening. Vertical bars shall extend from floor level below to the floor, or roof, level above. Where a 24" extension is not possible, extend bars as far beyond the opening as possible and terminate them with a 90 degree standard ACI hook.
- H. Horizontal wall reinforcing shall be continuous through joining concrete walls, masonry walls, columns, and pilasters. Provide a key between the wall and the column or pilaster. Horizontal wall reinforcing shall be placed inside the column vertical reinforcing.
- I. Anchor bolts and headed stud anchors shall be set in a grouted cell. Anchor bolts and headed stud anchors shall have 1" grout surrounding the shank at its penetration. Grout shall be flush with the face or top of the masonry.
- J. All masonry column ties shall terminate with 135 degree hooks plus a 6 bar diameter extension (4" minimum).
- K. The exposed face of all embed plates shall be set flush with the face of masonry wall or column.

4.4. Minimum Reinforcing:
All masonry walls shall be reinforced as follows, unless shown otherwise on the drawings. Reinforcing shall be placed in grouted cells.

Wall Thickness	Horizontal Reinforcing	Vertical Reinforcing
6"	#4 @ 48" o.c.	#5 @ 32" o.c.
8"	#5 @ 48" o.c.	#5 @ 32" o.c.
10"	#6 @ 48" o.c.	#6 @ 32" o.c.
12"	2 - #5 @ 48" o.c.	#6 @ 32" o.c.

Structural Steel

5.1. Material:
- A. W-Shapes: ASTM A992, (F_y = 50 ksi), except as noted otherwise
- B. All Other Shapes and Plates: ASTM A36 (Fy = 36 ksi), except as noted otherwise
- C. Rectangular and Square Hollow Structural Sections (HSS): ASTM A500, Grade C (Fy = 50 ksi)
- D. Round HSS: ASTM A500, Grade C (Fy = 46 ksi)
- E. Steel Pipe: ASTM A53, Grade B (Fy = 35 ksi)
- F. Steel Deck:
  1. Galvanized Steel Sheet: ASTM A653 or A1063, Grade 50 with G60 galvanized coating.
  2. Ungalvanized Steel Sheet: ASTM A1008 or A1039, Grade 50
- G. High-Strength Bolts:
  1. Group A: ASTM F3125 Grades A325 & F1852
  2. Group B: ASTM F3125 Grades A490 & F2280
  3. Group C: ASTM F3043 & ASTM F3111
- H. Deformed Bar Anchors (DBA): ASTM A496 or ASTMA1064, 70 ksi minimum yield strength.
- I. Headed Stud Anchors (HSA): ASTM A108, with dimensions complying with AISC specifications
- J. Anchor Rods: ASTM F1554, Grade 36, unless noted otherwise, with ASTM A563 heavy hex nuts and ASTM F436 hardened washers

5.2. Fabrication and construction shall comply with the following Codes and Standards:
- A. American Institute of Steel Construction (AISC) 360-16, "Specification for Structural Steel Buildings"
- B. AISC 341-16, "Seismic Provisions for Structural Steel Buildings"
- C. AISC 303-16, "Code of Standard Practice for Steel Buildings and Bridges" excluding the following: Section 3.3 (last two sentences of first paragraph), Section 4.4, Section 4.4.1, Section 4.4.2, Section 4.5, and Section 7.13.3
  1. The architectural drawings are the prime contract drawings. Consultants' drawings by other disciplines are supplementary to the architectural drawings. The structural drawings shall be used in conjunction with the architectural drawings. Detailing and shop drawing production for structural elements will require information (including dimensions) contained in architectural, structural, and/or other consultants' drawings. Refer to the Special Instructions section of the general notes, below.
- D. AISC 358-16, "Prequalified Connections for Special and Intermediate Steel Moment Frames for Seismic Applications."
- E. AISC/RCSC 2014, "Specification for Structural Joints Using High-Strength Bolts"
- F. American Welding Society (AWS) D1.1:2015, "Structural Welding Code – Steel" (specific items do not apply when they conflict with the AISC requirements)
- G. American Welding Society (AWS) D1.8:2016, "Structural Welding Code – Seismic Supplement" (specific items do not apply when they conflict with the AISC requirements)
- H. Steel Joist Institute (SJI): 100-15, "44th Edition Standard Specification Load Tables and Weight Tables for Steel Joists and Joist Girders K-Series, LH-Series, DHL-Series, Joist Girders;" 200-15, "Standard Specification for Composite Steel Joists, CJ-series"

5.3. Structural shapes and plates shall be fabricated from newly rolled (milled) one-piece sections without splices, unless specifically noted otherwise on the structural drawings. Connections for structural steel shall comply with the structural drawings, unless written approval is given by the Structural Engineer.

5.4. Welding:
- A. It is recommended the steel erection contractor and steel fabricator contact the Quality Assurance Agency prior to beginning any welds. A program of joint preparation and welding procedures should be worked out between the two parties before the welding is started so that correct welds will be made from the beginning.
- B. Certification of Welders: All shop and field welding shall be executed by AWS certified welders who have been specifically certified for the process of welding being performed. The welder's certification will be considered as being current unless the welder is not engaged in the process of welding being performed for a period exceeding six months or there is a specific reason to question a welder's ability as required by AWS. Certification and records must comply with AWS Standards. Certification and appropriate records must be provided to the Architect prior to beginning work.
- C. Electrodes: E-70 XX or as noted otherwise. E60 XX may be used for welding steel floor and roof decks.
- D. Minimum Welds: All intersecting steel shapes that are not bolted shall be connected by a fillet weld all around, unless noted otherwise. Fillet weld sizes that are not shown shall be 1/16" less than the thinnest of the connected parts for thicknesses 1/4" and larger. Fillet welds on plates less than 1/4" shall be of the same size as the thinnest of the connected parts.
- E. Reinforcing Bars: Do not weld rebar except as specifically detailed in the drawings. In such cases, use only AWS standards. Do not substitute reinforcing bars for deformed bar anchors (DBAs), machine bolts, or headed stud anchors (HSAs).
- F. Bolts: Do not apply any welds, including "tack" welds to bolts, including anchor bolts, except as specifically detailed in the drawings.
- G. Headed Stud Anchor (HSA) welding and Deformed Bar Anchor (DBA) welding shall conform to the manufacturer's specifications. Welding shall comply with AWS D1.1 Section 7.6 through 7.9 and Annex G.

5.5. Bolted Connections:
- A. Provide snug tightened joints with Group A (threads not excluded) bolts for steel to steel connections, unless noted otherwise. Snug tightened joints shall be used in connections for simple span framing and beam (or girder) to bearing plate connections. Snug tight is the condition that exists when all of the plies in a connection have been pulled into firm contact by the bolts in the joint and all of the bolts in the joint have been tightened sufficiently to prevent the removal of the nuts without the use of a wrench. The snug tightened condition is typically achieved with a few impacts of an impact wrench, application of an electric torque wrench until the wrench begins to slow, or the full effort of a worker on an ordinary spud wrench.
- B. Provide hardened washers beneath the turned element of all bolts or nuts. Provide hardened beveled washers, to compensate for the lack of parallelism, where the outer face of the bolted parts has a slope greater than one in twenty with respect to the plane normal to the bolt axis. Hardened washers or plates installed over oversized holes or slotted holes shall be at least 5/16" thick and shall conform to ASTM F436. Plates or bars installed at slotted holes shall have a size sufficient to completely cover the slot after installation.
- C. Where a steel to steel beam connection is not detailed in the drawings, provide a standard AISC framed connection with the capacity to support one half of the total uniform load capacity of the given shape for the span and for the steel specified.
- D. Bolts, nuts and washers shall not be reused.

5.6. Beam Web Stiffener Plates:
- A. Provide full-height web stiffener plates to each side of all beams above all bearing points. Unless noted otherwise, stiffener plates shall be the thickness indicated in the typical stiffener plate detail.

5.7. Composite Beams
- A. Composite beams are indicated on the framing plans with the suffix ( ). The number inside the brackets indicates number of headed stud anchors for this beam. Beams shall have the studs spaced uniformly over the entire beam length.

ARCHITECT 1877
ajc architects
703 east 1700 south
salt lake city, utah 84105
ph: 801.466.8818
fx: 801.466.4411
www.ajcarchitects.com

LICENSED CERTIFIED STRUCTURAL ENGINEER NO. 170416 JEFFERY THOMAS MILLER UTAH 5/18/20

CONSULTANT
REAVELEY Engineers
675 East 500 South, Suite 400
Salt Lake City, UT 84102
P 801 486 3883
F 801 485 0911
www.reaveley.com

OWNER INFORMATION

PROJECT DESCRIPTION

UNIVERSITY OF UTAH DUMKE GYMNASTICS BUILDING

1825 E. SOUTH CAMPUS DRIVE
SALT LAKE CITY, UTAH 84112

AHJ STAMP

SHEET NAME:
GENERAL NOTES

REVISIONS
MARK DATE DESCRIPTION

ISSUE DATA
ISSUE DATE: 10.04.21
ISSUE TYPE: CD
DRAWN BY: PD/RH
CHECKED BY: CT/GO
CLIENT PROJECT#: 1877

SHEET NUMBER:
SE001

10/4/2021 11:12:59 AM C:\Revit Models\2019-313 UU Dumke Gymnastics Remodel_pdelgadoXR9DX.rvt

ALL IDEAS, DESIGNS, ARRANGEMENTS AND PLANS INDICATED OR REPRESENTED BY THIS DRAWING ARE OWNED BY AND THE PROPERTY OF AJC ARCHITECTS PC AND WERE CREATED, EVOLVED, AND DEVELOPED FOR USE ON AND IN CONNECTION WITH THE SPECIFIED PROJECT. NONE OF THE IDEAS, DESIGNS, ARRANGEMENTS OR PLANS SHALL BE USED BY OR DISCLOSED TO ANY PERSON, FIRM, OR CORPORATION FOR ANY PURPOSE WHATSOEVER WITHOUT WRITTEN CONSENT OF AJC ARCHITECTS PC. WRITTEN DIMENSIONS ON THESE DRAWINGS SHALL HAVE PRECEDENCE OVER SCALE DIMENSIONS. CONTRACTORS SHALL VERIFY AND BE RESPONSIBLE FOR ALL DIMENSIONS AND CONDITIONS ON THE JOB AND THIS OFFICE MUST BE NOTIFIED OF ANY VARIATION FROM THE DIMENSIONS AND CONDITIONS SHOWN BY THESE DRAWINGS. WARNING: REPRODUCTION HEREOF IS A CRIMINAL OFFENSE UNDER 18 U.S.C. SEC. 506. UNAUTHORIZED DISCLOSURE MAY CONSTITUTE TRADE SECRET MISAPPROPRIATION IN VIOLATION OF I.C.24-2-31-1 ET. SEQ. AND OTHER LAWS.

B. Beams which have more than one number inside the symbol (, ,), such as (W, X, Y, Z), shall have "W" number of studs spaced evenly over the first "section of beam", "X" number of studs spaced evenly over the second "section of beam", "Y" number of studs spaced evenly over the third "section of beam", and "Z" number of studs spaced evenly over the fourth "section of beam". A "section of beam" is defined as that portion of beam located between the column and the nearest intersecting framing member or that portion of beam located between two adjacent intersecting framing members.
C. Use 3/4" diameter studs. Headed studs shall extend 1.1/2" minimum above the top of the steel deck after welding. Headed studs shall be applied through the metal deck to the top flange of the steel section or welded directly to the steel section.
D. The minimum center-to-center spacing of stud connectors shall be six (6) diameters along the longitudinal axis of the supporting composite beam and four (4) diameters transverse to the longitudinal axis of the supporting composite beam. The maximum center to center spacing shall not exceed 32".
E. C= XX" on the plans denotes precamber dimension (upward) in inches.

6. Miscellaneous

6.1. Post-Installed Anchors in Concrete and Masonry
A. Anchorage to hardened concrete and grout-filled masonry shall include all mechanical and adhesive anchors and epoxy doweled reinforcing bars of size, quantity, spacing, and embedment as shown on the drawings. Additional anchors shall not be used without approval from the Engineer prior to installation.
B. Special inspection is required during the installation of all post-installed anchors. Refer to applicable code evaluation reports and the Quality Assurance and Statement of Special Inspections sections of the General Structural Notes.
C. Anchorage to Concrete:
1. All post-installed anchors into hardened concrete shall be selected from the following pre-approved products, unless noted otherwise:

Steel Screw Anchor	Evaluation Report
Hilti KWIK HUS-EZ	ICC ESR-3027
DeWalt Screw-Bolt+	ICC ESR-3889
Simpson Titen HD	ICC ESR-2713

Steel Expansion/Wedge Anchor	Evaluation Report
Hilti KWIK Bolt TZ	ICC ESR-1917
DeWalt Power-Stud+ SD2	ICC ESR-2502
Simpson Strong-Bolt 2	ICC ESR-3037

Adhesive Anchor System	Evaluation Report
Hilti HIT-HY 200	ICC ESR-3187
Hilti HIT-RE 500 V3	ICC ESR-3814
DeWalt AC200+	ICC ESR-4027
DeWalt Pure 110+	ICC ESR-3298
Simpson SET-3G	ICC ESR-4057

2. Adhesive anchors shall be installed into concrete having a minimum age of 21 days. For installations sooner than 21 days, consult the adhesive manufacturer.
D. Anchorage to Masonry:
1. All post-installed anchors into grout-filled masonry shall be selected from the following pre-approved products, unless noted otherwise:

Steel Screw Anchor	Evaluation Report
Hilti KWIK HUS-EZ	ICC ESR-3056
DeWalt Screw-Bolt+	ICC ESR-4042
Simpson Titen HD	ICC ESR-1056

Steel Expansion/Wedge Anchor	Evaluation Report
Hilti KWIK Bolt TZ	ICC ESR-3785
DeWalt Power-Stud+ SD1	ICC ESR-2966
Simpson Wedge-All	ICC ESR-1396

Adhesive Anchor System	Evaluation Report
Hilti HIT-HY 270	ICC ESR-4143
DeWalt AC100+ Gold	ICC ESR-3200

E. Alternate anchors or adhesives are permitted with approval of the Engineer. The Contractor shall submit the proposed anchor product data and code evaluation report demonstrating the anchor is equivalent to or exceeds the capacity of the specified anchor.
F. Installation of adhesive anchors horizontally or upwardly inclined to support sustained tension loads shall be performed by personnel certified by an applicable certification program. Certification shall include written and performance tests in accordance with the ACI/CRSI Adhesive Anchor Installer Certification program, or equivalent. Proof of current certification shall be submitted to the Engineer for approval prior to commencement of installation.
G. Anchors shall be installed according to the Manufacturer's Printed Installation Instructions and applicable code evaluation reports including:
1. Hole diameter, depth, and cleaning procedure
2. Adhesive mixing, preparation, and placement
3. Installation torque
H. Locate all existing reinforcement and embedded items prior to drilling into concrete or masonry elements. Do not damage rebar or embeds while drilling or installing anchors.
I. Grout all defective or abandoned holes with non-shrink grout or an injectable epoxy adhesive matching the surrounding concrete compressive strength. Consult the Architect for additional requirements at architecturally exposed concrete.
J. Drilled anchors are not allowed in post-tensioned concrete without approval of the Architect and Engineer.
K. Carbon steel anchors are limited to use in dry, interior locations.
L. Holes for post-installed anchors may not be core drilled unless specifically allowed by the manufacturer's installation instructions and the code evaluation report.

7. Special Instructions

7.1. The project specifications are not superseded by the General Structural Notes but are intended to be complementary to them. Consult the specifications for additional requirements in each section. Notes and specific details on the drawings shall take precedence over General Structural Notes and typical details.

7.2. The architectural drawings are the prime contract drawings. Consultant drawings by other disciplines are supplementary to the architectural drawings. All omissions or conflicts, including dimensions, between the various elements of the consultants' drawings and/or specifications shall be brought to the attention of the Architect before proceeding with any work involved. In case of conflict, follow the most stringent requirement as directed by the Architect without additional cost to the Owner. Any work done by the Contractor after discovery of such discrepancy shall be done at the Contractor's risk.

7.3. The structural drawings shall be used in conjunction with the architectural drawings. Primary structural elements and overall structural layout are indicated within the structural plans and details. Some secondary elements, architectural layouts, alcoves, elevations, slopes, depressions, curbs, mechanical equipment and electrical equipment, are not indicated within the structural drawings. Detailing and shop drawing production for structural elements will require information (including dimensions) contained in the architectural, structural and/or other consultants' drawings.

7.4. Shoring and Bracing Requirements:
A. Floor and Roof Structures -- The General Contractor is responsible for the method and sequence of all structural erection. The Contractor shall provide temporary shoring and bracing as the method of erection requires to provide adequate vertical and lateral support. Shoring and bracing shall remain in place as the chosen method requires until all permanent members are in place and all final connections are completed, including all roof and floor attachments. The building shall not be considered stable until all connections are complete.
B. Foundation walls must be braced until the complete floor or roof systems is completed. Do not backfill until floor or roof systems are in place.
C. Walls above grade shall be braced until the structural system is complete. Walls shall not be considered to be self-supporting.

7.5. All expansion joints (E.J.) shown in the structural drawings shall be considered seismic separation joints, unless noted otherwise.

7.6. Submittals: A copy of all shop drawings that have been submitted for review must be kept at the construction site for reference. These drawings must bear the appropriate review stamps. The shop drawing review shall not relieve the Contractor of the responsibility of completing the project according to the contract documents. The General Contractor shall review and mark all shop drawings prior to submitting them to the Architect for review. Shop Drawings made from reproductions of (these) contract drawings will be rejected.

7.7. Project Coordination: It shall be the responsibility of the General Contractor to coordinate with all trades any and all items that are to be integrated into the structural system. Openings or penetrations through, or attachments to the structural system that are not indicated on these drawings shall be the responsibility of the General Contractor and shall be coordinated with the Architect/Engineers. The order of construction is the responsibility of the General Contractor. It is the Contractor's obligation to provide all items necessary for the chosen procedure.

7.8. Contractor shall field verify all dimensions, and conditions. If the contract drawings do not represent actual conditions, Contractor shall notify Architect/Engineer prior to fabrication or construction within that area.

7.9. Notice of Copyright: The structural drawings, plans, schedules, notes and details are hereby copyrighted by Reaveley Engineers. Submission or distribution of documents to meet official regulatory requirements or for similar purposes in connection with the project is not to be construed as publication in derogation of Reaveley Engineers' reserved rights. The documents defining the structure are instruments of service prepared by Reaveley Engineers for one use only. Furthermore, these documents shall not be reproduced, or copied, in whole or in part by the Contractor or subcontractors for preparation of shop drawings or other submittals.

8. Quality Assurance

8.1. Quality Assurance Agency Requirements:
A. The Owner shall engage a qualified Quality Assurance Agency (QAA) to provide all special inspection and quality assurance testing for the project. The QAA shall provide all information necessary for the building official to determine that the agency meets the applicable requirements.
1. The QAA shall be objective, competent and independent from the Contractor responsible for the work being inspected. The agency shall disclose to the building official and the registered design professional in responsible charge possible conflicts of interest so that objectivity can be confirmed.
2. The QAA shall have adequate equipment to perform required tests. The equipment shall be periodically calibrated.
3. The QAA shall employ experienced personnel educated in conducting, supervising and evaluating tests and special inspections. Experience or training shall be considered relevant where the documented experience or training is related in complexity to the same type of special inspection or testing activities for projects of similar complexity and material qualities.
4. The QAA shall send copies of all inspection and testing reports to the building official, Owner, Architect, Engineer and Contractor. Reports shall indicate that the work inspected was or was not completed in conformance to the approved construction documents. Discrepancies shall be brought to the immediate attention of the Contractor for correction. If they are not corrected, the discrepancies shall be brought to the attention of the, Architect and Engineer.
5. The QAA shall submit a final report documenting required special inspections and tests, and correction of any discrepancies noted in the inspections or tests. The final report shall be distributed to the building official, Owner, Architect and Engineer in a timely manner prior to the completion of the project.

8.2. Contractor Responsibilities:
A. The Contractor shall submit a written statement of responsibility to the building official and the Owner or the owner's authorized agent prior to the commencement of work on the systems or components listed in the statement of special inspections. The Contractor's statement of responsibility shall contain acknowledgement or awareness of the special requirements contained in the statement of special inspections.
B. Notification of QAA: The Contractor shall notify the QAA in a timely manner so that inspection and testing may be performed as outlined in the statement of special inspections.
8.3. Structural Observations by the Engineer of Record.
A. The Engineer of Record will perform structural observations at critical phases of the project. Observations will be made on a periodic basis throughout the construction of the structural system. Copies of the Engineer's report will be distributed to the Architect, Contractor, Owner, and building official.
B. Observation visits to the site by the Engineer's field representatives shall not be construed as inspection or approval of construction.

9. Statement of Special Inspections

9.1. The following materials, systems and components require special inspection or testing per Chapter 17 of the International Building Code (IBC).

9.2. For items requiring continuous inspection, a special inspector must be present onsite during the performance of that task. In most cases, periodic inspections/tests shall be performed prior to commencing the task, intermittently during the task, and at the completion of the task. Frequency marked with (E) designates periodic inspections that must be performed prior to or upon completion of every task.

Structural Steel per IBC Section 1705.2.1, 1705.12.1 & 1705.13.1

Item	Frequency	Detailed Instructions
Prior to Welding (Table N5.4-1, AISC 360-16):		
Verify welding procedures (WPS) and consumable certificates	Periodic (E)	
Material identification	Periodic	Verify type and grade of material.
Welder identification	Periodic	A system shall be maintained by which a welder who has welded a joint or member can be identified.
Fit-up groove welds	Periodic	Verify joint preparation, dimensions, cleanliness, tacking, and backing.
Access holes	Periodic	Verify configuration and finish.
Fit-up of fillet welds	Periodic	Verify alignment, gaps at root, cleanliness of steel surfaces, and tack weld quality and location.
During Welding (Table N5.4-2, AISC 360-16):		
Use of qualified welders	Periodic	Verify that welders are appropriately qualified.
Control and handling of welding consumables	Periodic	Verify packaging and exposure control.
Cracked tack welds	Periodic	Verify that welding does not occur over cracked tack welds.
Environmental conditions	Periodic	Verify wind speed is within limits as well as precipitation and temperature.
WPS followed	Periodic	Verify items such as settings on welding equipment, travel speed, welding materials, shielding gas type/flow rate, preheat applied, interpass temperature maintained, and proper position.
Welding techniques	Periodic	Verify interpass and final cleaning, each pass is within profile limitations, and each pass meets quality requirements.
Steel headed stud anchors	Periodic	Verify placement and installation of steel headed stud anchors.
After Welding (Table N5.4-3, AISC 360-10):		
Welds cleaned	Periodic	Verify that welds have been properly cleaned.
Size, length, and location of welds	Periodic (E)	
Welds meet visual acceptance criteria	Periodic (E)	Verify weld meets visual acceptance criteria based upon crack prohibition, weld/base-metal fusion, crater cross section, weld profiles, weld size, undercut, and porosity.
Arc strikes	Periodic (E)	
k-area	Periodic (E)	When welding of doubler plates, continuity plates or stiffeners has been performed in the k-area, visually inspect the web k-area for cracks within 3 in. of the weld.
Weld access holes in rolled heavy shapes and built-up heavy shapes (flange >2")	Periodic (E)	After rolled heavy shapes and built-up heavy shapes are welded, visually inspect the weld access holes for cracks.
Backing & weld tabs removed	Periodic (E)	
Repair activities	Periodic (E)	

Item	Frequency	Detailed Instructions
Document acceptance or rejection of welded joint/member	Periodic (E)	
No prohibited welds	Periodic (E)	Verify no prohibited welds have been added without approval of the EOR.
Nondestructive Testing (Section N5.5, AISC 360-16):		
CJP welds (Risk Cat. III or IV)	Periodic (E)	Ultrasonic testing shall be performed on 100% of CJP groove welds in butt, T- and corner joints subject to transversely applied tension loading in materials 5/16-inch thick or greater per Section N5.5b. A reduction in the rate of ultrasonic testing is allowed per Section N5.5e.
Welded joints subject to fatigue	Periodic (E)	Reduction of ultrasonic testing is prohibited.
Prior to Bolting (Table N5.6-1, AISC 360-16):		
Certifications of fasteners	Continuous	
Fasteners marked	Periodic	Verify that fasteners have been marked in accordance with ASTM requirements.
Proper fasteners for joint	Periodic	Verify grade, type, and bolt length if threads are excluded from the shear plane.
Proper bolting procedure	Periodic	Verify proper procedure is used for the joint detail.
Connecting elements	Periodic	Verify appropriate faying surface condition and hole preparation, if specified, meet requirements.
Pre-installation verification testing	Periodic	Observe and document verification testing by installation personnel for fastener assemblies and methods used.
Proper storage	Periodic	Verify proper storage of bolts, nuts, washers, and other fastener components.
During Bolting (Table N5.6-2, AISC 360-16):		
Fastener assemblies	Periodic	Verify that fastener assemblies are of suitable condition, paced in all holes, and washers and nuts are positioned as required.
Snug-tight prior to pretensioning	Periodic	Verify that joints are brought to snug-tight condition prior to pretensioning operation.
Fastener component	Periodic	Verify that fastener component not turned by wrench is prevented from rotating.
Pretensioned fasteners	Periodic	Verify that fasteners are Pretensioned in accordance with RCSC Specification, progressing systematically from the most rigid point toward the free edges.
After Bolting (Table N5.6-3, AISC 360-16):		
Document acceptance or rejection of bolted connections	Periodic (E)	
Other Steel Inspections (Section N5.8, AISC 360-16: Table J8-1, J10-1, AISC 341-17):		
Structural steel details	Periodic	All fabricated steel or steel frames shall be inspected to verify compliance with the details shown in the construction documents, such as braces, stiffeners, member locations, and proper application of joint details at each connection.
Anchor rods and other embedments supporting structural steel	Periodic	Shall be on the premises during the placement of anchor rods and other embedments supporting structural steel for compliance with construction documents. Verify the diameter, grade, type, and length of the anchor rod or embedded item, and the extent or depth of embedment prior to placement of concrete.

Item	Frequency	Detailed Instructions
Galvanized steel members	Periodic	Exposed cut surfaces of galvanized structural steel main members and exposed corners of rectangular HSS shall be visually inspected for cracks subsequent to galvanizing. Cracks shall be repaired or the member shall be rejected.
Steel Elements of Composite Construction (Table N6.1, AISC 360-16; Tables J9-1 thru J9-3, AISC 341-17):		
Placement and installation of steel deck	Continuous	
Placement and installation of steel headed stud anchors	Continuous	
Document acceptance or rejection of steel elements	Continuous	
Reinforcing steel	Periodic	Verify appropriate reinforcement size, spacing, and orientation; that it has not been re-bent in field; that it is correctly tied and supported; and that required steel clearances have been provided.
Composite member size	Periodic	Verify that composite member is the required size.

Steel Construction Other Than Structural Steel per IBC Section 1705.2.2

Item	Frequency	Detailed Instructions
Steel Roof and Floor Decks (IBC Table 1705.2.2):		
Material verification of cold-formed steel deck	Periodic	Confirm that identification markings are provided to conform to ASTM standards specified on construction documents.
Floor and roof deck welds	Periodic	Visual inspection is required to confirm that weld meets acceptance criteria of AWS D1.3. Welder qualifications should also be verified.

Concrete Construction per IBC Sections 1705.3 &1705.12

Item	Frequency	Detailed Instructions
Reinforcing steel	Periodic	Verify prior to placing concrete that reinforcing is of specified type, grade and size; that it is free of oil, dirt and rust; that it is located and spaced properly; that hooks, bends, ties, stirrups and supplemental reinforcement are placed correctly; that lap lengths, stagger and offsets are provided; and that all mechanical connections are installed per the manufacturer's instructions and/or evaluation report.
Welding of reinforcing steel	Periodic	Verify weldability of reinforcing steel other than A706. Continuous inspection is required for welding of reinforcing steel used in intermediate or special concrete moment frames, boundary elements of special structural walls or shear reinforcement.
Cast-in bolts & embeds	Periodic	
Post-installed adhesive anchors installed in horizontally or upwardly inclined orientations to resist sustained tension loads	Continuous	All post-installed anchors/dowels shall be special inspected in accordance with the approved code evaluation report and with ACI Section 17.8.2.
Post-installed mechanical anchors and adhesive anchors not defined above	Periodic	
Use of required mix design	Periodic	Verify that all mixes used comply with the approved construction documents; ACI 318: Ch. 19, 26.4.3-26.4.4; and IBC 1904.1, 1908.2, 1908.3.

Item	Frequency	Detailed Instructions
Concrete sampling for strength tests, slump, air content, and temperature	Continuous	Samples for strength tests shall be taken in accordance with ASTM C172, cured per ASTM C31 and tested in accordance with ASTM C39 by a testing agency complying with ASTM C1077. Acceptance criteria for strength tests shall be per ACI 318 Section 26.12.3. For each mix placed, samples shall be taken not less than once a day, nor less than once for each 150 yd³ of concrete, nor less than once for each 5000 ft² of surface area for slabs or walls. At the time fresh concrete is sampled to fabricate specimens for strength tests, perform slump and air content tests and determine the temperature of the concrete.
Concrete & shotcrete placement	Continuous	
Curing temperature and techniques	Periodic	Verify that concrete is maintained at a temperature of at least 50°F and in a moist condition for at least 7 days after placement. Verify that high-early-strength concrete is maintained at a temperature of at least 50°F and in a moist condition for at least 3 days after placement. Accelerated curing methods may be used (see ACI 318: 26.5.3.2(c)). Shotcrete shall be maintained at a temperature of at least 40°F for the same period of time as noted for concrete and kept in the moist condition during curing periods in accordance to IBC 1908.9 All concrete materials, reinforcement, forms, fillers, and ground shall be free from frost. In hot weather conditions ensure that appropriate measures are taken to avoid plastic shrinkage cracking and that the specified water/cement ratio is not exceeded.
In-situ strength verification	Periodic	Verify that adequate strength has been achieved prior to the removal of shores and forms.
Formwork	Periodic	Verify that the forms are placed plumb and conform to the shapes, lines, and dimensions of the members as required by the approved construction documents.
Reinforcement in special moment frames, special structural walls, and all components of special structural walls including coupling beams and wall piers	Continuous	Verify that ASTM A 615 reinforcing steel used in these areas complies with ACI 318: 20.2.2.5 by means of certified mill test reports. If this reinforcing steel is to be welded chemical tests shall be performed in accordance with AWS D1.4.
Welding of Reinforcing Steel (IBC Table 1705.3):		
Verification of weldability	Periodic	Verify weldability of reinforcing steel other than A706 based upon carbon equivalent and in accordance with AWS D1.4. Continuous inspection is required for welding of reinforcing steel used in intermediate or special concrete moment frames, boundary elements of special structural walls or shear reinforcement.
Other reinforcing steel	Periodic	Visually inspect all welds in accordance with AWS D1.4.
Single-pass fillet welds, 5/16" max	Periodic	
All other welds	Continuous	

Masonry Construction per IBC Section 1705.4

Item	Frequency	Detailed Instructions
Post-installed anchors or dowels		All post-installed anchors/dowels shall be specially inspected as required by the approved ICC-ES report.

Soils per IBC Section 1705.6

Item	Frequency	Detailed Instructions
Verify subgrade is adequate to achieve design bearing capacity	Periodic	Prior to placement of concrete.
Verify excavations extend to proper depth and material	Periodic	Prior to placement of compacted fill or concrete.
Verify that subgrade has been appropriately prepared prior to placing compacted fill	Periodic	Prior to placement of compacted fill.
Perform classification and testing of compacted fill materials	Periodic	All materials shall be checked at each lift for proper classifications and gradations not less than once for each 10,000ft² of surface area.
Verify proper materials, densities and lift thicknesses during placement and compaction.	Continuous	

ARCHITECT 1877

a j c architects
703 east 1700 south
salt lake city, utah 84105
ph: 801.466.8818
fx: 801.466.4411
www.ajcarchitects.com

LICENSED CERTIFIED STRUCTURAL ENGINEER
NO. 170416
JEFFERY THOMAS MILLER
UTAH
5/18/20

CONSULTANT

REAVELEY Engineers
675 East 500 South, Suite 400
Salt Lake City, UT 84102
P 801 486 3883
F 801 485 0911
www.reaveley.com

OWNER INFORMATION

PROJECT DESCRIPTION

UNIVERSITY OF UTAH DUMKE GYMNASTICS BUILDING
1825 E. SOUTH CAMPUS DRIVE
SALT LAKE CITY, UTAH 84112

AHJ STAMP

SHEET NAME:
GENERAL NOTES

REVISIONS
MARK DATE DESCRIPTION

ISSUE DATA
ISSUE DATE: 10.04.21
ISSUE TYPE: CD
DRAWN BY: PD/RH
CHECKED BY: CT/GO
CLIENT PROJECT#:1877

SHEET NUMBER:
SE002

10/4/2021 11:12:59 AM C:\Revit Models\2019-313 UU Dumke Gymnastics Remodel_pdelgadoXR9DX.rvt

ALL IDEAS, DESIGNS, ARRANGEMENTS AND PLANS INDICATED OR REPRESENTED BY THIS DRAWING ARE OWNED BY AND THE PROPERTY OF AJC ARCHITECTS PC AND WERE CREATED, EVOLVED, AND DEVELOPED FOR USE ON AND IN CONNECTION WITH THE SPECIFIED PROJECT. NONE OF THE IDEAS, DESIGNS, ARRANGEMENTS OR PLANS SHALL BE USED BY OR DISCLOSED TO ANY PERSON, FIRM, OR CORPORATION FOR ANY PURPOSE WHATSOEVER WITHOUT WRITTEN CONSENT OF AJC ARCHITECTS PC. WRITTEN DIMENSIONS ON THESE DRAWINGS SHALL HAVE PRECEDENCE OVER SCALE DIMENSIONS. CONTRACTORS SHALL VERIFY AND BE RESPONSIBLE FOR ALL DIMENSIONS AND CONDITIONS ON THE JOB AND THIS OFFICE MUST BE NOTIFIED OF ANY VARIATION FROM THE DIMENSIONS AND CONDITIONS SHOWN BY THESE DRAWINGS. WARNING: REPRODUCTION HEREOF IS A CRIMINAL OFFENSE UNDER 18 U.S.C. SEC. 506. UNAUTHORIZED DISCLOSURE MAY CONSTITUTE TRADE SECRET MISAPPROPRIATION IN VIOLATION OF I.C.24-2-3-1 ET. SEQ. AND OTHER LAWS.

ALL IDEAS, DESIGNS, ARRANGEMENTS AND PLANS INDICATED OR REPRESENTED BY THIS DRAWING ARE OWNED BY AND THE PROPERTY OF AJC ARCHITECTS PC AND WERE CREATED, EVOLVED, AND DEVELOPED FOR USE ON AND IN CONNECTION WITH THE SPECIFIED PROJECT. NONE OF THE IDEAS, DESIGNS, ARRANGEMENTS OR PLANS SHALL BE USED BY OR DISCLOSED TO ANY PERSON, FIRM, OR CORPORATION FOR ANY PURPOSE WHATSOEVER WITHOUT WRITTEN CONSENT OF AJC ARCHITECTS PC. WRITTEN DIMENSIONS ON THESE DRAWINGS SHALL HAVE PRECEDENCE OVER SCALE DIMENSIONS. CONTRACTORS SHALL VERIFY AND BE RESPONSIBLE FOR ALL DIMENSIONS AND CONDITIONS ON THE JOB AND THIS OFFICE MUST BE NOTIFIED OF ANY VARIATION FROM THE DIMENSIONS AND CONDITIONS SHOWN BY THESE DRAWINGS. WARNING - REPRODUCTION HEREOF IS A CRIMINAL OFFENSE UNDER 18 U.S.C. SEC. 506. UNAUTHORIZED DISCLOSURE MAY CONSTITUTE TRADE SECRET MISAPPROPRIATION IN VIOLATION OF 17 U.S.C. § 1.01 ET. SEQ. AND OTHER LAWS.

10/4/2021 11:13:00 AM C:\Revit Models\2019-313 UU Dumke Gymnastics Remodel_pdelgadoXR9DX.rvt

COMBINED LEGEND

PLAN LEGEND

- FOOTING STEP
- FOOTING - CONTINUOUS
- FOOTING - THICKENED SLAB
- FOOTING - SQUARE FOOTING - RECTANGULAR FOOTING - MAT FOOTING
- RECESSED/DEPRESSED SLAB
- OPENING
- CONCRETE BEAM
- STEEL BEAM OR GIRDER
- STEEL JOIST OR PURLIN
- STEEL COLUMN - TUBE (HSS)
- STEEL COLUMN - WIDE FLANGE
- CONCRETE WALL
- CONCRETE WALL - RECESSED (FDTN PLAN)
- CONCRETE LINTEL (FRAMING PLAN)
- CONCRETE WALL - RECESSED AT DOOR
- CONCRETE PIER IN CONCRETE WALL. TOP OF PIER RECESSED BELOW SLAB.
- CONCRETE COLUMN
- CONCRETE JAMB COLUMN POURED MONOLITHIC WITH CONCRETE WALL
- MASONRY WALL
- MASONRY WALL - RECESSED (FDTN PLAN)
- MASONRY LINTEL (FRAMING PLAN)
- MASONRY COLUMN IN MASONRY WALL
- CONCRETE OVER STEEL DECK
- STEEL DECK
- EXISTING FOOTING - CONTINUOUS
- EXISTING FOOTING - THICKENED SLAB
- EXISTING FOOTING - SQUARE, RECTANGULAR, OR MAT
- EXISTING CONCRETE SHEAR WALL, FOUNDATION WALL OR RETAINING WALL
- EXISTING OPENING THROUGH CONCRETE WALL
- EXISTING CONCRETE PIER IN CONCRETE WALL. PIER RECESSED BELOW SLAB.
- EXISTING CONCRETE COLUMN
- NEW OPENING THROUGH EXISTING CONCRETE WALL
- EXISTING MASONRY WALL
- EXISTING OPENING THROUGH MASONRY WALL
- NEW OPENING THROUGH EXISTING MASONRY WALL
- EXISTING MASONRY COLUMN IN MASONRY WALL
- EXISTING STEEL COLUMN - TUBE
- EXISTING STEEL COLUMN - WIDE FLANGE
- EXISTING STEEL COLUMN - PIPE
- EXISTING STEEL BRACED FRAME
- EXISTING STEEL BEAM OR GIRDER
- EXISTING STEEL JOIST OR PURLIN
- EXISTING CROSS BRIDGING
- EXISTING HORIZONTAL BRIDGING
- EXISTING OPENING

FRAMING CONNECTIONS

STEEL FRAMING MEMBER DESIGNATION

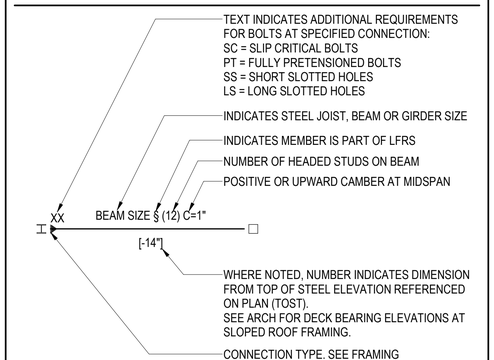

STEEL FRAMING CONNECTION LEGEND

- GRAVITY BEAM MOMENT CONNECTION B3/SF601

PLAN MARKS

BF-#	BRACED FRAME
CB-#	CONCRETE BEAM
CC-#	CONCRETE COLUMN
CCSS-#	CANTILEVERED CONCRETE SUSPENDED SLAB
CDP-#	CONCRETE DRILLED PIER
CFW-#	CONCRETE FOUNDATION WALL
CGB-#	CONCRETE GRADE BEAM
CJ-#	CONCRETE JOIST
CJC-#	CONCRETE JAMB COLUMN
CL-#	CONCRETE LINTEL
CP-#	CONCRETE PIER
CRW-#	CONCRETE RETAINING WALL
CSG-#	CONCRETE SLAB ON GRADE
CSH-#	CONCRETE SHEAR HEAD
CSS-#	CONCRETE SUSPENDED SLAB
CSW-#	CONCRETE SHEAR WALL
CW-#	CONCRETE WALL
FC#	CONTINUOUS FOOTING
FM#	MAT FOOTING
FR#	RECTANGULAR FOOTING
FS#	SQUARE FOOTING
FTS#	THICKENED SLAB FOOTING
HD-#	HOLD DOWN ANCHOR
MC-#	MASONRY COLUMN
MF-#	MOMENT FRAME
ML-#	MASONRY LINTEL
MP-#	MASONRY PIER
MW-#	MASONRY WALL
PTB-#	POST-TENSIONED CONCRETE BEAM
SBP-#	STEEL BASE PLATE
SC-#	STEEL COLUMN
SCP-#	STEEL CAP PLATE
SD-#	STEEL DECK
SDA-#	STEEL DECK ATTACHMENT
SG-#	STEEL GIRDER
SJ-#	STEEL JOIST
SND-#	SNOW DRIFT
WB-#	WOOD BEAM
WBW-#	WOOD BEARING WALL
WC-#	WOOD COLUMN
WD-#	WOOD DIAPHRAGM
WJ-#	WOOD JOIST
WSW-#	WOOD SHEAR WALL

ABBREVIATIONS

@	AT
AB	ANCHOR BOLT (S)
ABV	ABOVE
ALT	ALTERNATE
APPROX	APPROXIMATE
ARCH	ARCHITECT(URAL)
BLDG	BUILDING
BLW	BELOW
BM	BEAM
BOT	BOTTOM
BRG	BEARING
BTWN	BETWEEN
CJ	CONSTRUCTION JOINT OR CONTROL JOINT
CJP	COMPLETE JOINT PENETRATION
CMU	CONCRETE MASONRY UNIT
COL	COLUMN
CONC	CONCRETE
CONST	CONSTRUCTION
CONT	CONTINUOUS
CONTR	CONTRACTOR
CTR	CENTER
D.B.	DECK BEARING
db	DIAMETER OF REINFORCING BAR
DBA	DEFORMED BAR ANCHORS
DBL	DOUBLE
DET	DETAIL
DIA (OR Ø)	DIAMETER
DIAG	DIAGONAL
DIM	DIMENSION
DK	DECK
DN	DOWN
DWG	DRAWING
DWL	DOWEL
E.F.	EACH FACE
E.J.	EXPANSION JOINT (SEISMIC SEPARATION JOINT)
E.W.	EACH WAY
EA	EACH
EL	ELEVATION
ELEC	ELECTRICAL
ELEV	ELEVATOR
ENG	ENGINEER
EQ	EQUAL
EQUIP	EQUIPMENT
EXIST (E)	EXISTING
EXP	EXPANSION / EXPOSED
EXT	EXTERIOR
F.D.	FLOOR DRAIN
F.F.	FINISH FLOOR
F.V.	FIELD VERIFY
FDTN	FOUNDATION
FIN	FINISH
FL	FLOOR
FT	FOOT
FTG	FOOTING
GA	GAUGE
GALV	GALVANIZED
GLB	GLU-LAMINATED BEAM
GR	GRADE
GSN	GENERAL STRUCTURAL NOTES
HB	HORIZONTAL BRIDGING
HORIZ	HORIZONTAL
HSA	HEADED STUD ANCHORS
HSS	HOLLOW STRUCTURAL STEEL
HT	HEIGHT
I.F.	INSIDE FACE
IBC	INTERNATIONAL BUILDING CODE
ICBO	INTERNATIONAL CONFERENCE OF BUILDING OFFICIALS
ICC	INTERNATIONAL CODE COUNCIL
IN	INCH
INSUL	INSULATION
INT	INTERIOR
JST	JOIST
JT	JOINT
K	KIPS - 1,000 POUNDS
KLF	KIPS PER LINEAL FOOT
KSF	KIPS PER SQUARE FOOT
KSI	KIPS PER SQUARE INCH
LBS	POUNDS
Ld, Lt, Lsb, Lsbt, Ldc, Lsc	SEE CONCRETE REINFORCING BAR DEVELOPMENT AND LAP LENGTH SCHEDULE
LF	LINEAL FOOT
LFRS	LATERAL FORCE RESISTING SYSTEM (SFRS & WFRS)
LLH	LONG LEG HORIZONTAL
LLV	LONG LEG VERTICAL
LSH	LONG SIDE HORIZONTAL

ABBREVIATIONS

LSV	LONG SIDE VERTICAL
MAS	MASONRY
MAX	MAXIMUM
MCJ	MASONRY CONTROL JOINT
MECH	MECHANICAL
MFGR	MANUFACTURER
MIN	MINIMUM
MISC	MISCELLANEOUS
NIC	NOT IN CONTRACT
NORM	NORMAL
NTS	NOT TO SCALE
O.C.	ON CENTER
O.F.	OUTSIDE FACE
OPNG	OPENING
OPP	OPPOSITE
OWSJ	OPEN WEB STEEL JOIST
P.T.	POST-TENSIONED
PCF	POUNDS/CUBIC FOOT
PJP	PARTIAL JOINT PENETRATION
PL	PLATE
PLF	POUNDS/LINEAL FOOT
PNL	PANEL
PSF	POUNDS/SQ FOOT
PSI	POUNDS/SQ INCH
R.D.	ROOF DRAIN
REINF	REINFORCING
REQD	REQUIRED
SFRS	SEISMIC FORCE RESISTING SYSTEM
SHT	SHEET
SI	SPECIAL INSPECTION (SP. INSP.)
SIM	SIMILAR
SOG	SLAB ON GRADE
SQ	SQUARE
STAG	STAGGERED
STD	STANDARD
STIFF	STIFFENER
STL	STEEL
STRUCT	STRUCTURAL
T & B	TOP AND BOTTOM
T.O.	TOP OF
TEMP	TEMPERATURE
THDS	THREADS
TOC	TOP OF CONCRETE
TOCP	TOP OF CONCRETE PIER
TOF	TOP OF FOOTING
TOS	TOP OF SLAB
TOST	TOP OF STEEL
TOW	TOP OF WALL
TYP	TYPICAL
UNO	UNLESS NOTED OTHERWISE
VERT	VERTICAL
W.P.	WORK POINT
W/	WITH
WF	WIDE FLANGE
WFRS	WIND FORCE RESISTING SYSTEM
WT	WEIGHT
WWF	WELDED WIRE FABRIC
YD	YARD

STRUCTURAL DRAWING LIST

Sht. No.	Sheet Name
SE001	GENERAL NOTES
SE002	GENERAL NOTES
SE003	LEGENDS & ABBREVIATIONS
SB101	FOOTING AND FOUNDATION PLAN
SB201	WALL ELEVATIONS
SB501	TYPICAL FOOTING & FOUNDATION DETAILS
SB502	FOOTING & FOUNDATION DETAILS
SB503	FOOTING & FOUNDATION DETAILS
SB601	CONCRETE SCHEDULES
SB602	CONCRETE SCHEDULES
SB611	MASONRY SCHEDULES
SF101	FLOOR FRAMING PLAN
SF102	ROOF FRAMING PLAN
SF501	TYPICAL FLOOR FRAMING DETAIL
SF502	TYPICAL FLOOR FRAMING DETAIL
SF503	FLOOR FRAMING DETAILS
SF504	FLOOR FRAMING DETAILS
SF511	TYPICAL ROOF FRAMING DETAILS
SF512	TYPICAL ROOF FRAMING DETAILS
SF521	STAIR FRAMING PLAN AND DETAILS
SF601	TYPICAL STEEL FRAMING SCHEDULES
SF602	STEEL COLUMN SCHEDULES & DETAILS
SF603	STEEL DECK SCHEDULES

ARCHITECT 1877

ajc architects
703 east 1700 south
salt lake city, utah 84105
ph: 801.466.8818
fx: 801.466.4411
www.ajcarchitects.com

LICENSED STRUCTURAL ENGINEER — NO. 170418 — JEFFERY THOMAS MILLER — UTAH

5/18/20

CONSULTANT

REAVELEY Engineers
675 East 500 South, Suite 400
Salt Lake City, UT 84102
P 801 486 3883
F 801 485 0911
www.reaveley.com

OWNER INFORMATION

PROJECT DESCRIPTION

UNIVERSITY OF UTAH DUMKE GYMNASTICS BUILDING

1825 E. SOUTH CAMPUS DRIVE
SALT LAKE CITY, UTAH 84112

AHJ STAMP

SHEET NAME:

LEGENDS & ABBREVIATIONS

REVISIONS

MARK	DATE	DESCRIPTION

ISSUE DATA

ISSUE DATE:	10.04.21
ISSUE TYPE:	CD
DRAWN BY:	PD/RH
CHECKED BY:	CT/GO
CLIENT PROJECT#:	1877

SHEET NUMBER:

SE003

ALL IDEAS, DESIGNS, ARRANGEMENTS AND PLANS INDICATED OR REPRESENTED BY THIS DRAWING ARE OWNED BY AND THE PROPERTY OF AJC ARCHITECTS PC AND WERE CREATED, EVOLVED, AND DEVELOPED FOR USE ON AND IN CONNECTION WITH THE SPECIFIED PROJECT. NONE OF SUCH IDEAS, DESIGNS, ARRANGEMENTS OR PLANS SHALL BE USED BY OR DISCLOSED TO ANY PERSON, FIRM, OR CORPORATION FOR ANY PURPOSE WHATSOEVER WITHOUT WRITTEN CONSENT OF AJC ARCHITECTS PC. WRITTEN DIMENSIONS ON THESE DRAWINGS SHALL HAVE PRECEDENCE OVER SCALE DIMENSIONS. CONTRACTORS SHALL VERIFY AND BE RESPONSIBLE FOR ALL DIMENSIONS AND CONDITIONS ON THE JOB AND THIS OFFICE MUST BE NOTIFIED OF ANY VARIATION FROM THE DIMENSIONS AND CONDITIONS SHOWN BY THESE DRAWINGS. WARNING: REPRODUCTION HEREOF IS A CRIMINAL OFFENSE UNDER 18 U.S.C. 506. UNAUTHORIZED DISCLOSURE MAY CONSTITUTE TRADE SECRET MISAPPROPRIATION IN VIOLATION OF UC 24.2.31.1 ET. SEQ. AND OTHER LAWS.

10/4/2021 11:12:53 AM C:\Revit Models\2019-313 UU Dumke Gymnastics Remodel_pdelgado\XR9DX.rvt

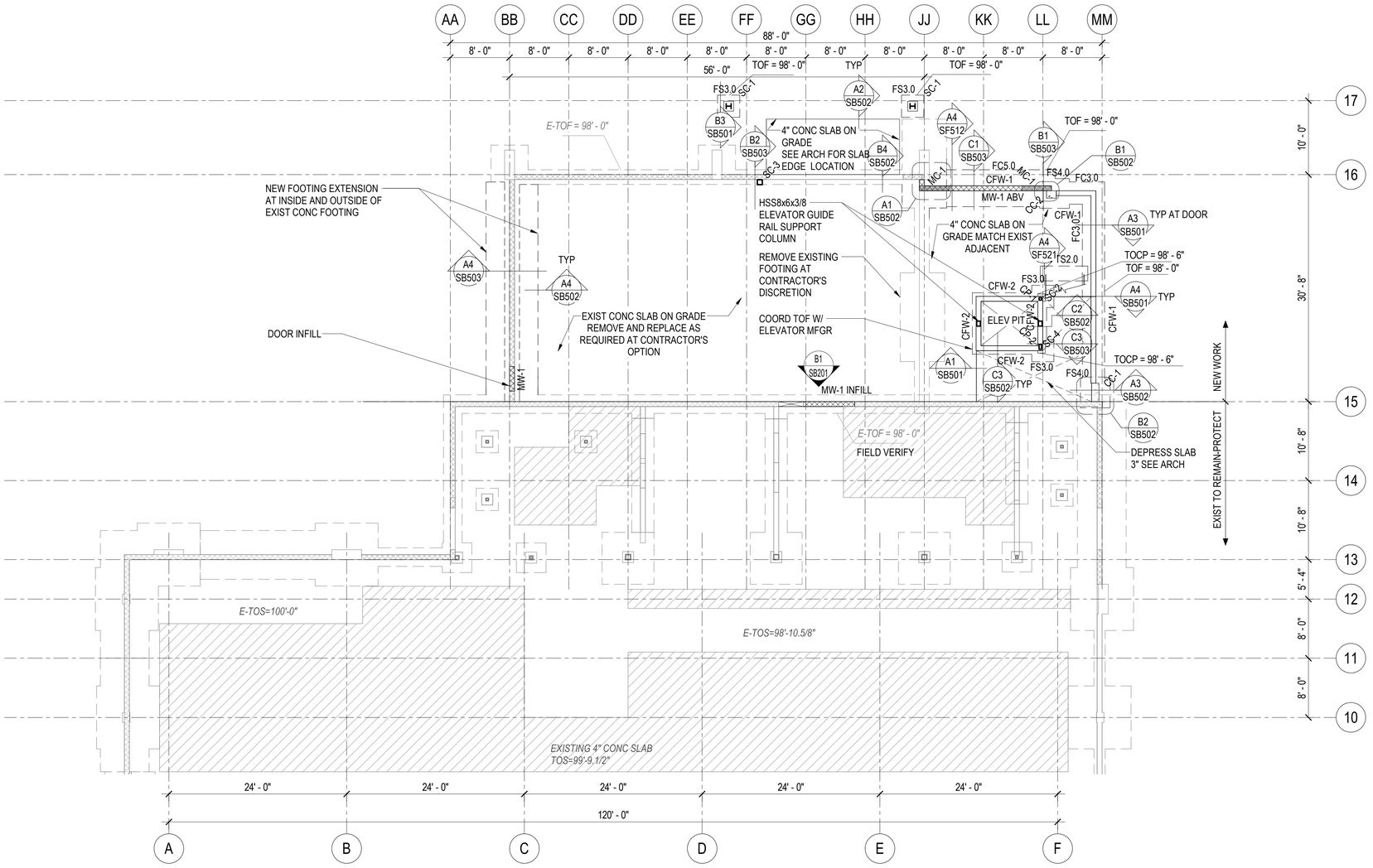

1 SB101 FOOTING AND FOUNDATION PLAN

SCALE: 1/8" = 1'-0"

ELEVATOR NOTES

1. CONTRACTOR TO COORDINATE LOCATION OF GUIDERAIL SUPPORT COLUMNS, SEPARATOR BEAMS, MACHINE BEAMS AND HOIST BEAMS. MEMBERS SHOWN ARE SCHEMATIC AND MAY CHANGE BASED ON ELEVATOR MANUFACTURER REQUIREMENTS.

2. CONTRACTOR SHALL VERIFY ELEVATOR PIT DEPTH AND SUMP REQUIREMENTS PRIOR TO PLACING CONCRETE AT PIT. SEE DETAIL C4/SB502 FOR SUMP PIT CONSTRUCTION.

FOOTING & FOUNDATION PLAN NOTES

1. SEE ARCHITECTURAL, CIVIL AND LANDSCAPE DRAWINGS FOR EXTERIOR CONCRETE RETAINING AND / OR SITE WALLS NOT SHOWN ON THE STRUCTURAL DRAWINGS.

3. PROVIDE REINFORCEMENT AT WALL ENDS, INTERSECTIONS AND OPENINGS PER TYPICAL DETAILS C1/SB501 AND B4/SB502 .

4. DOWEL ALL CONCRETE WALLS TO FOOTING PER TYPICAL DETAIL B1/SB501.

5. PROVIDE COMPACTED STRUCTURAL FILL UNDER ALL CONCRETE FOOTINGS PER TYPICAL DETAIL B4/SB501.

6. DEMO ABANDONED FOOTINGS AT CONTRACTOR'S OPTION.

EXISTING BUILDING NOTES

1. THE CONTRACTOR SHALL FIELD VERIFY ALL EXISTING CONDITIONS PRIOR TO DETAILING, FABRICATING, ERECTING OR INSTALLING ANY STRUCTURAL ELEMENT. ALL DISCREPANCIES SHALL BE BROUGHT TO THE ATTENTION OF THE DESIGN TEAM IN A TIMELY MANNER SUCH THAT WORK WILL NOT BE DELAYED.

2. THE CONTRACTOR SHALL PROVIDE ADEQUATE SHORING OF EXISTING STRUCTURE DURING CONSTRUCTION & DEMOLITION.

3. FRAMING GEOMETRY SHOWN WILL REQUIRE MANY EXISTING STRUCUTRAL ELEMENTS TO REMAIN INTACT. CONTRACTOR SHALL BE RESPONSIBLE FOR PROVIDING TEMPORARY SHORING AS NEEDED AND SHALL BE RESPONSIBLE FOR THE MEANS AND METHODS OF SHORING IN A SAFE & RELIABLE MANNER.

4. CORE DRILL CORNERS OF NEW OPENING BEFORE SAW CUTTING. DO NOT OVERCUT.

SLAB ON GRADE PLAN NOTES

1. ALL SLABS ON GRADE SHALL BE 4 INCHES THICK TO MATCH EXISTING SLAB, UNLESS NOTED OTHERWISE. SEE TYPICAL CONCRETE SLAB ON GRADE PROFILE DETAIL D4/SB501 FOR SUBGRADE REQUIREMENTS.

2. SEE ARCHITECTURAL, CIVIL AND LANDSCAPE DRAWINGS FOR EXTERIOR CONCRETE WORK AT DOORS, SIDEWALKS, ETC.

3. SEE ARCHITECTURAL DRAWINGS AND FINISH SCHEDULE FOR SLAB DEPRESSIONS, SLOPES TO DRAINS AND SLAB AREAS TO RECEIVE FLOOR TILE.

4. SEE TYPICAL CONCRETE SLAB ON GRADE DETAILS FOR CONSTRUCTION JOINTS, CONTROL JOINTS AND ADDITIONAL SLAB REINFORCING A1/SB501.

5. SUBMIT SLAB ON GRADE CONTROL JOINT PLAN FOR REVIEW.

MASONRY WALL NOTES

1. EXISTING NON-BEARING MASONRY WALLS NOT SHOWN FOR CLARITY. SEE ARCH FOR LOCATIONS.

2. REINFORCING OF NEW OPENINGS IN EXISTING NON-BEARING MASONRY WALLS IS REQUIRED - SEE DETAILS B2/SB503 AND B4/SB503 . SEE ARCH AND MECH FOR OPENING LOCATIONS.

3. BRACING OF DISTURBED EXISTING NON-BEARING MASONRY WALLS IS REQUIRED. CONTACT ENGINEER FOR SPECIFIC SITE CONDITIONS ENCOUNTERED. SEE ARCH AND MECH FOR LOCATIONS OF NEW OPENINGS IN EXISTING NON-BEARING MASONRY WALLS / PORTIONS OF WALL REMOVED.

4. ALL ABANDONED PENETRATIONS THROUGH MASONRY WALLS TO BE INFILLED. SEE C2/SB503.

5. PROVIDE ADDITIONAL HORIZONTAL AND VERTICAL REINFORCING AT WALL CORNERS AND WALL ENDS, SEE DETAIL B4/SB611 .

6. ENSURE MASONRY IS GROUT-FILLED PRIOR TO INSTALLATION OF POST-INSTALLED ANCHORAGE, TYP. SEE GSN 6. 6.1 A.

ARCHITECT 1877
ajc architects
703 east 1700 south
salt lake city, utah 84105
ph: 801.466.8818
fx: 801.466.4411
www.ajcarchitects.com
LICENSED CERTIFIED STRUCTURAL ENGINEER
NO. 170418
JEFFERY THOMAS MILLER
UTAH
5/18/20

CONSULTANT
REAVELEY Engineers
675 East 500 South, Suite 400
Salt Lake City, UT 84102
P 801 486 3883
F 801 485 0911
www.reaveley.com

OWNER INFORMATION

PROJECT DESCRIPTION

UNIVERSITY OF UTAH DUMKE GYMNASTICS BUILDING

1825 E. SOUTH CAMPUS DRIVE
SALT LAKE CITY, UTAH 84112

AHJ STAMP

SHEET NAME:
FOOTING AND FOUNDATION PLAN

REVISIONS

MARK	DATE	DESCRIPTION

ISSUE DATA

ISSUE DATE:	10.04.21
ISSUE TYPE:	CD
DRAWN BY:	PD/RH
CHECKED BY:	CT/GO
CLIENT PROJECT#:	1877

SHEET NUMBER:
SB101

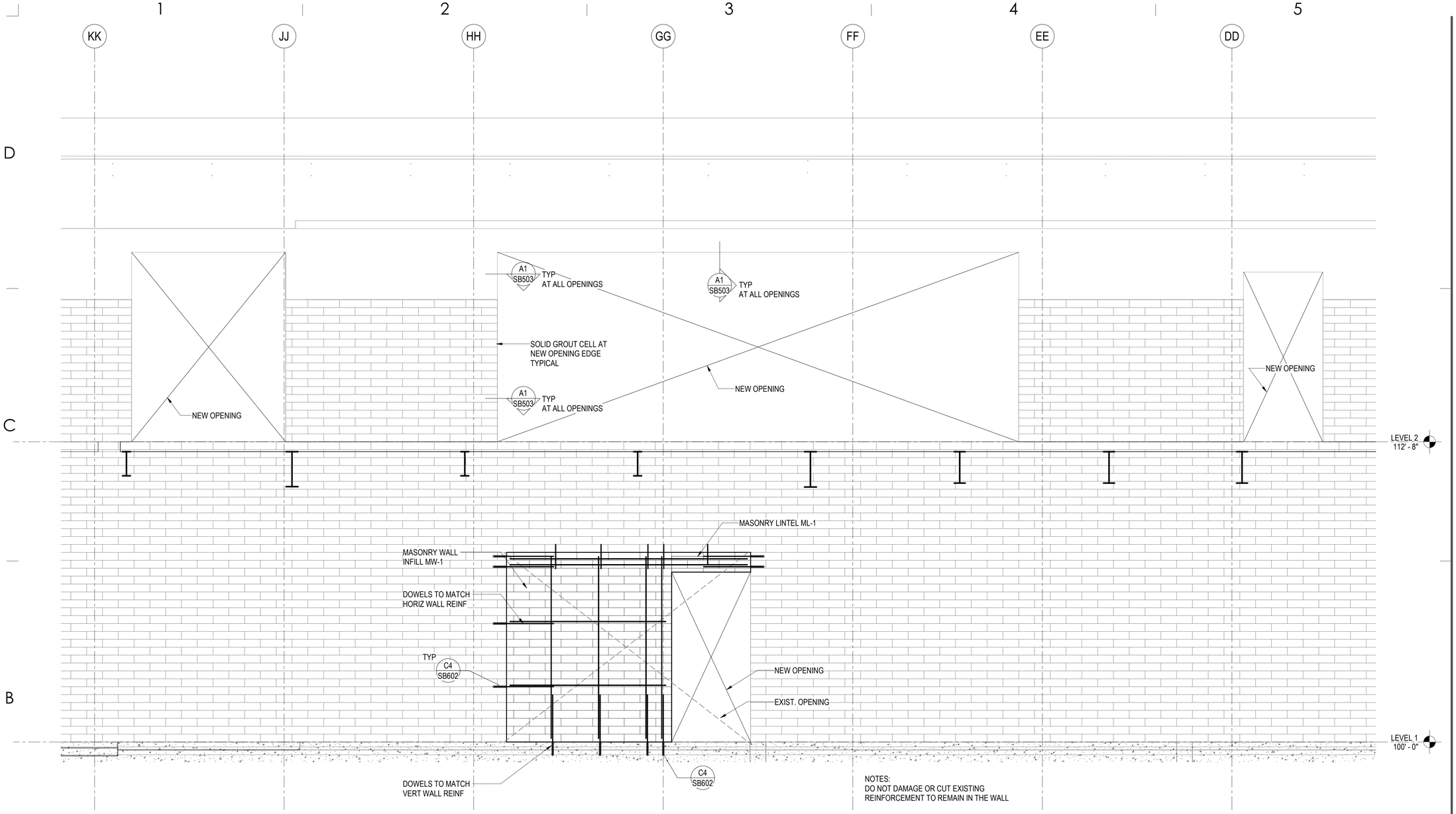

NOTES:
DO NOT DAMAGE OR CUT EXISTING
REINFORCEMENT TO REMAIN IN THE WALL

B1 SB201 WALL ELEVATION ALONG GRID 15

SCALE: 1/2" = 1'-0"

ARCHITECT 1877

ajc architects

703 east 1700 south
salt lake city, utah 84105
ph: 801.466.8818
fx: 801.466.4411
www.ajcarchitects.com

LICENSED CERTIFIED STRUCTURAL ENGINEER
NO. 170418
JEFFERY THOMAS MILLER
UTAH
5/18/20

CONSULTANT

REAVELEY Engineers

675 East 500 South, Suite 400
Salt Lake City, UT 84102
P 801 486 3883
F 801 485 0911
www.reaveley.com

OWNER INFORMATION

PROJECT DESCRIPTION

UNIVERSITY OF UTAH DUMKE GYMNASTICS BUILDING

1825 E. SOUTH CAMPUS DRIVE
SALT LAKE CITY, UTAH 84112

AHJ STAMP

SHEET NAME:

WALL ELEVATIONS

REVISIONS

MARK	DATE	DESCRIPTION

ISSUE DATA

ISSUE DATE:	10.04.21
ISSUE TYPE:	CD
DRAWN BY:	PD/RH
CHECKED BY:	CT/GO
CLIENT PROJECT#:	1877

SHEET NUMBER:

SB201

10/4/2021 11:12:53 AM C:\Revit Models\2019-313 UU Dumke Gymnastics Remodel_pdelgadoXR9DX.rvt

ALL IDEAS, DESIGNS, ARRANGEMENTS AND PLANS INDICATED OR REPRESENTED BY THIS DRAWING ARE OWNED BY AND THE PROPERTY OF AJC ARCHITECTS PC AND WERE CREATED, EVOLVED, AND DEVELOPED FOR USE ON AND IN CONNECTION WITH THE SPECIFIED PROJECT. NONE OF THE IDEAS, DESIGNS, ARRANGEMENTS OR PLANS SHALL BE USED BY OR DISCLOSED TO ANY PERSON, FIRM, OR CORPORATION FOR ANY PURPOSE WHATSOEVER WITHOUT WRITTEN CONSENT OF AJC ARCHITECTS PC. WRITTEN DIMENSIONS ON THESE DRAWINGS SHALL HAVE PRECEDENCE OVER SCALE DIMENSIONS. CONTRACTORS SHALL VERIFY AND BE RESPONSIBLE FOR ALL DIMENSIONS AND CONDITIONS ON THE JOB AND THIS OFFICE MUST BE NOTIFIED OF ANY VARIATION FROM THE DIMENSIONS AND CONDITIONS SHOWN BY THESE DRAWINGS. WARNING: REPRODUCTION HEREOF IS A CRIMINAL OFFENSE UNDER 18 U.S.C. SEC. 506. UNAUTHORIZED DISCLOSURE MAY CONSTITUTE TRADE SECRET MISAPPROPRIATION IN VIOLATION OF I.C.24-2-3.1-1 ET. SEQ. AND OTHER LAWS.

ALL IDEAS, DESIGNS, ARRANGEMENTS AND PLANS INDICATED OR REPRESENTED BY THIS DRAWING ARE OWNED BY AND THE PROPERTY OF AJC ARCHITECTS PC AND WERE CREATED, EVOLVED, AND DEVELOPED FOR USE ON AND IN CONNECTION WITH THE SPECIFIED PROJECT. NONE OF THE IDEAS, DESIGNS, ARRANGEMENTS OR PLANS INDICATED IN OR REPRESENTED BY THIS DRAWING SHALL BE USED BY OR DISCLOSED TO ANY PERSON, FIRM, OR CORPORATION FOR ANY PURPOSE WHATSOEVER WITHOUT WRITTEN CONSENT OF AJC ARCHITECTS PC. WRITTEN DIMENSIONS ON THESE DRAWINGS SHALL HAVE PRECEDENCE OVER SCALE DIMENSIONS. CONTRACTORS SHALL VERIFY AND BE RESPONSIBLE FOR ALL DIMENSIONS AND CONDITIONS ON THE JOB AND THIS OFFICE MUST BE NOTIFIED OF ANY VARIATION FROM THE DIMENSIONS AND CONDITIONS SHOWN BY THESE DRAWINGS. WARNING - REPRODUCTION HEREOF IS A CRIMINAL OFFENSE UNDER 18 U.S.C. SEC. 506. UNAUTHORIZED DISCLOSURE MAY CONSTITUTE TRADE SECRET MISAPPROPRIATION IN VIOLATION OF UTAH CODE ANN. 13-24-2 (1) (4). AND OTHER LAWS.

10/4/2021 11:12:54 AM C:\Revit Models\2019-313 UU Dumke Gymnastics Remodel_pdelgadoXR9DX.rvt

WALL ENDS

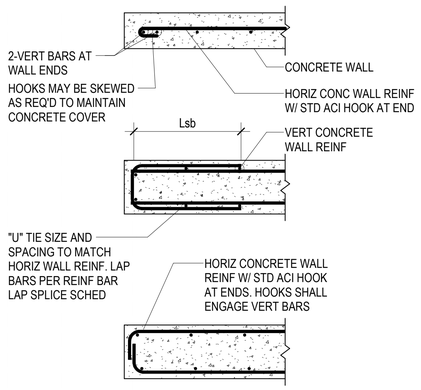

Fing-Wall-Corners

WALL CORNERS

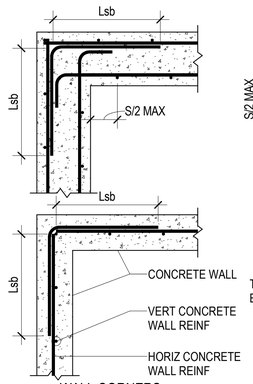

WALL INTERSECTIONS

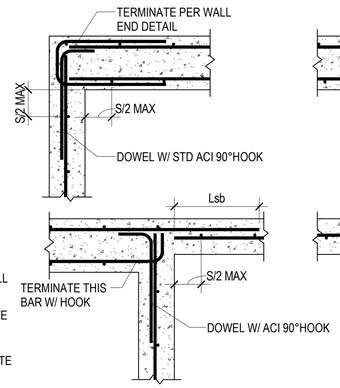

S=VERT BAR SPACING

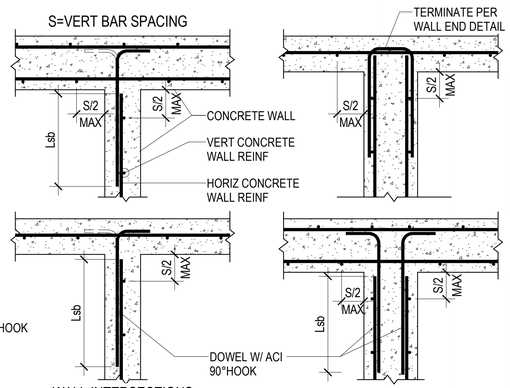

C1 SB501 TYPICAL CONCRETE WALL REINFORCING AT ENDS, CORNERS AND INTERSECTIONS (PLAN VIEWS)

NO SCALE

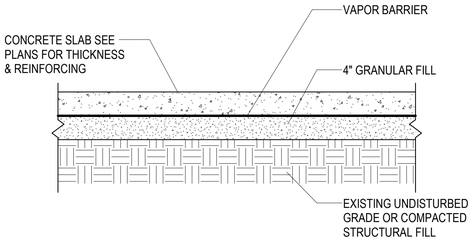

Fing-Slab-Profile

D4 SB501 TYPICAL CONCRETE SLAB ON GRADE PROFILE

NO SCALE

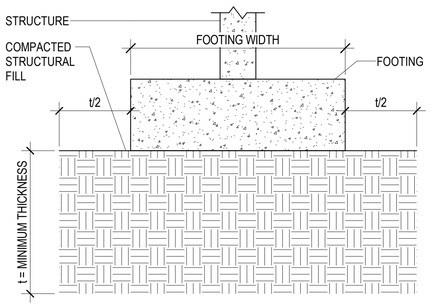

COMPACTED STRUCTURAL FILL:
SEE EARTHWORK SECTION OF THE GENERAL STRUCTURAL NOTES.

Fing-Compacted-Structural-Fill

SLAB ADJACENT TO WALL

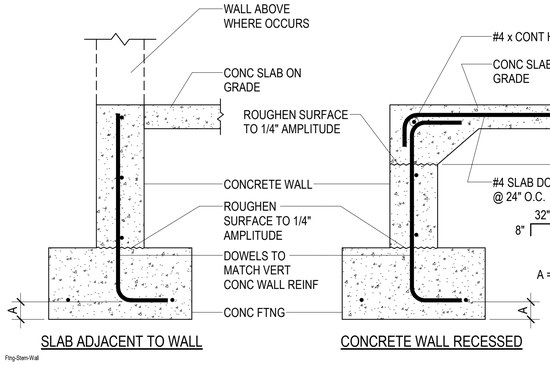

Fing-Stem-Wall

CONCRETE WALL RECESSED

CONCRETE WALL RECESSED AT DOOR

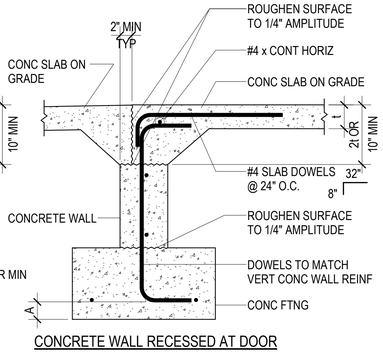

B1 SB501 TYPICAL CONCRETE SLAB ON GRADE TO CONCRETE WALL

NO SCALE

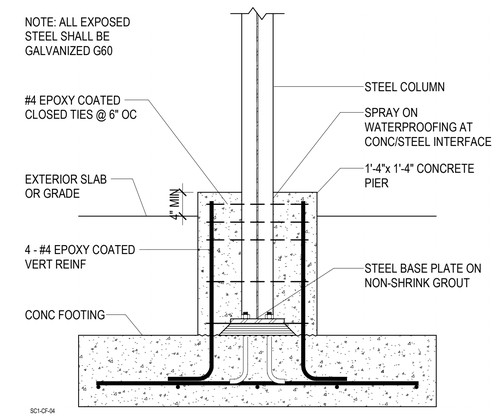

SC1-CF-04

B3 SB501 STEEL COLUMN BASE WITH CONCRETE PIER

NO SCALE

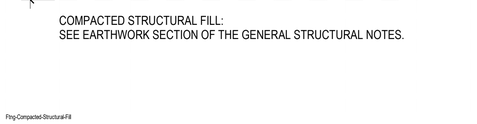

B4 SB501 TYPICAL COMPACTED STRUCTURAL FILL DETAIL

NO SCALE

A1 SB501 TYPICAL CONCRETE SLAB ON GRADE DETAILS

NO SCALE

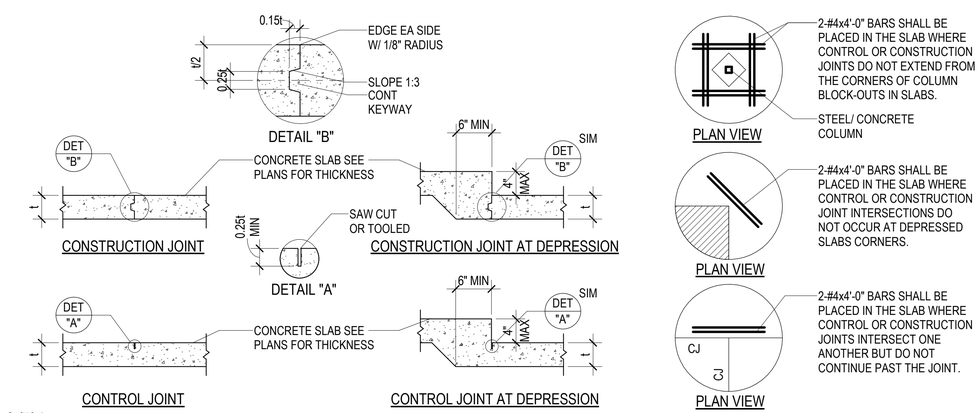

Fing-Slab-Details

B2 SB501 TYPICAL CONCRETE SLAB ON GRADE DETAILS

NO SCALE

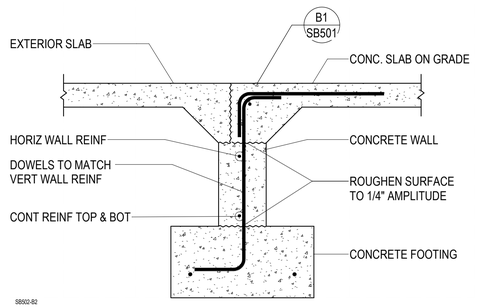

SB502-B2

A3 SB501 TYPICAL CONCRETE SLAB TO FOUNDATION WALL AT DOOR OPENING

NO SCALE

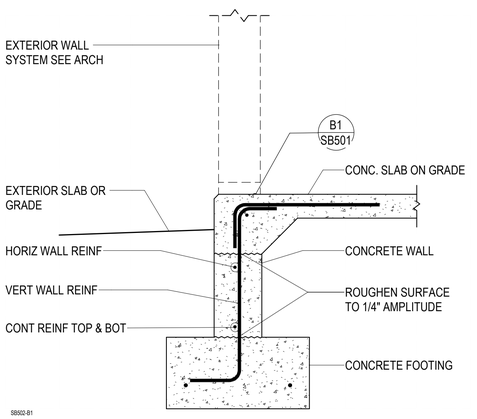

SB502-B1

A4 SB501 TYPICAL CONCRETE SLAB TO FOUNDATION WALL AT CURTAIN WALL

NO SCALE

ARCHITECT 1877
ajc architects
703 east 1700 south
salt lake city, utah 84105
ph: 801.466.8818
fx: 801.466.4411
www.ajcarchitects.com
LICENSED CERTIFIED STRUCTURAL ENGINEER NO. 170418 JEFFERY THOMAS MILLER UTAH
5/18/20

CONSULTANT
REAVELEY Engineers
675 East 500 South, Suite 400
Salt Lake City, UT 84102
P 801 486 3883
F 801 485 0911
www.reaveley.com

OWNER INFORMATION

PROJECT DESCRIPTION

UNIVERSITY OF UTAH DUMKE GYMNASTICS BUILDING

1825 E. SOUTH CAMPUS DRIVE
SALT LAKE CITY, UTAH 84112

AHJ STAMP

SHEET NAME:
TYPICAL FOOTING & FOUNDATION DETAILS

REVISIONS

MARK	DATE	DESCRIPTION

ISSUE DATA

ISSUE DATE:	10.04.21
ISSUE TYPE:	CD
DRAWN BY:	PD/RH
CHECKED BY:	CT/GO
CLIENT PROJECT#:	1877

SHEET NUMBER:
SB501

ALL IDEAS, DESIGNS, ARRANGEMENTS AND PLANS INDICATED OR REPRESENTED BY THIS DRAWING ARE OWNED BY, AND THE PROPERTY OF, AJC ARCHITECTS PC AND WERE CREATED, EVOLVED, AND DEVELOPED FOR USE ON AND IN CONNECTION WITH THE SPECIFIED PROJECT. NONE OF THE IDEAS, DESIGNS, ARRANGEMENTS OR PLANS INDICATED IN OR REPRESENTED BY THIS DRAWING, ALL OF WHICH ARE COPYRIGHTED BY AJC ARCHITECTS PC, MAY BE USED BY OR DISCLOSED TO ANY PERSON, FIRM, OR CORPORATION FOR ANY PURPOSE WHATSOEVER WITHOUT WRITTEN CONSENT OF AJC ARCHITECTS PC. WRITTEN DIMENSIONS ON THESE DRAWINGS SHALL HAVE PRECEDENCE OVER SCALE DIMENSIONS. CONTRACTORS SHALL VERIFY AND BE RESPONSIBLE FOR ALL DIMENSIONS AND CONDITIONS ON THE JOB AND THIS OFFICE MUST BE NOTIFIED OF ANY VARIATION FROM THE DIMENSIONS AND CONDITIONS SHOWN BY THESE DRAWINGS. WARNING: REPRODUCTION HEREOF IS A COPYRIGHT INFRINGEMENT AND/OR MISAPPROPRIATION IN VIOLATION OF 17 U.S.C. SEC. 506. UNAUTHORIZED DISCLOSURE MAY CONSTITUTE TRADE SECRET MISAPPROPRIATION IN VIOLATION OF 18 U.S.C. SEC. 1836, AND OTHER LAWS.

10/4/2021 11:12:55 AM C:\Revit Models\2019-313 UU Dumke Gymnastics Remodel_pdelgadoXR9DX.rvt

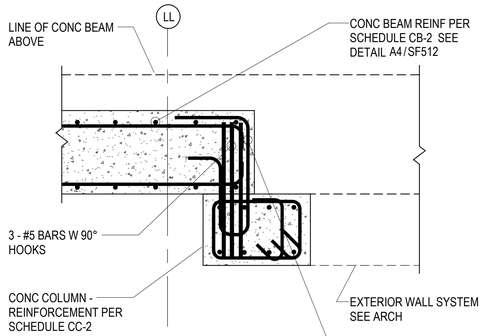

C1 / SB502 — COLUMN TO WALL CONN DETAIL AT EL=121' - 2" MATCH EXIST BEAM ELEVATION
NO SCALE

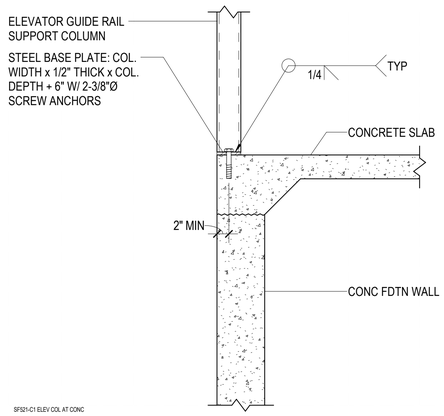

C2 / SB502 — TYPICAL ELEVATOR GUIDE RAIL SUPPORT COLUMN BEARING ON CONCRETE
NO SCALE

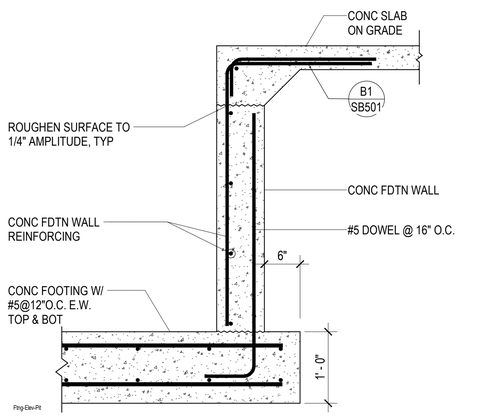

C3 / SB502 — TYPICAL ELEVATOR PIT DETAIL
NO SCALE

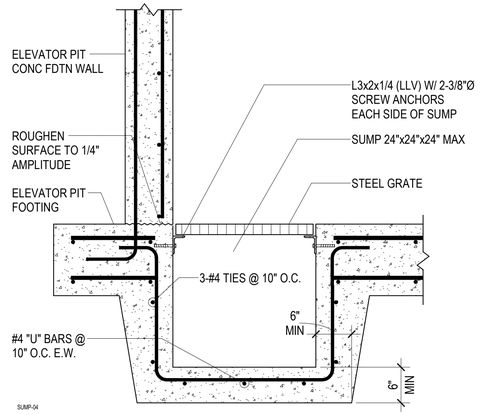

C4 / SB502 — TYPICAL SUMP AT ELEVATOR PIT WALL
NO SCALE

C

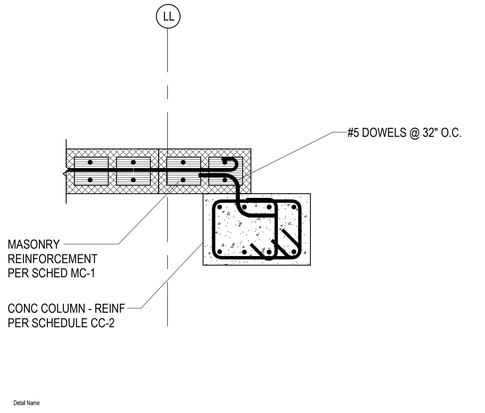

B1 / SB502 — COLUMN TO WALL CONN DETAIL AT EL=100' - 0' LEVEL 1
NO SCALE

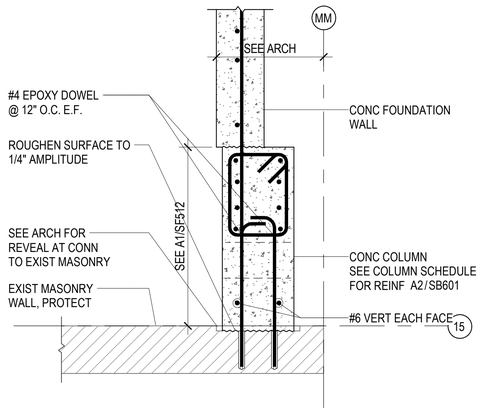

B2 / SB502 — NEW CONC COLUMN AT EXIST WALL AT EL=100' - 0" LEVEL 1
NO SCALE

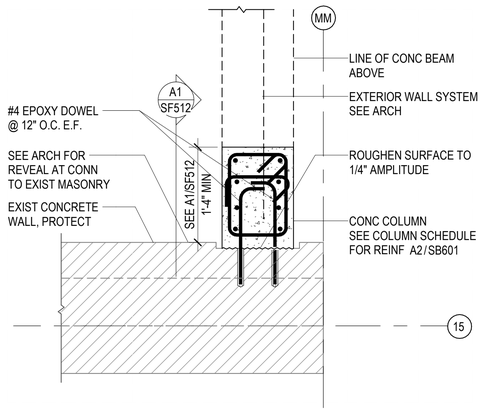

B3 / SB502 — NEW CONC COLUMN AT EXIST WALL AT EL=121' - 8"
NO SCALE

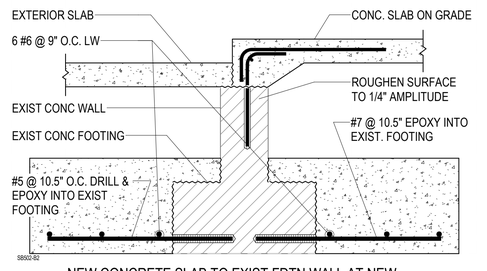

B4 / SB502 — NEW CONCRETE SLAB TO EXIST FDTN WALL AT NEW DOOR OPENING
NO SCALE

B

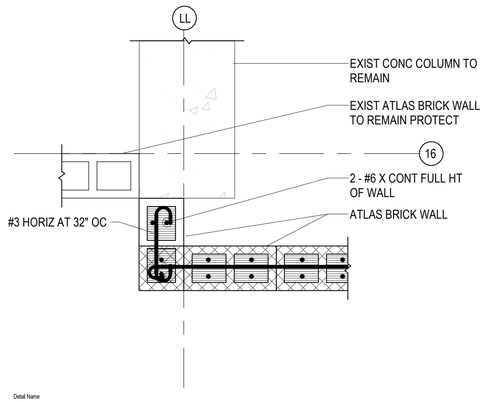

A1 / SB502 — WALL EXIST/ ADDITION CORNER
NO SCALE

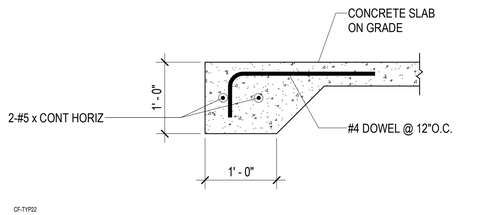

A2 / SB502 — TYPICAL THICKENED SLAB EDGE
NO SCALE

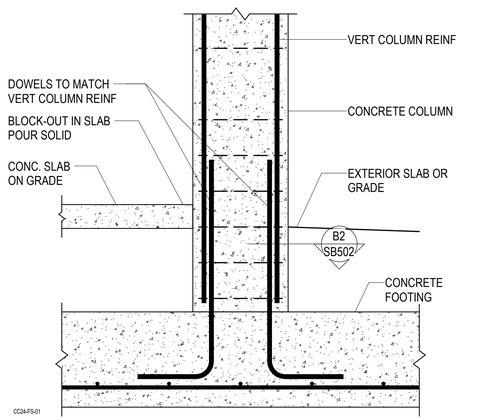

A3 / SB502 — TYPICAL CONCRETE COLUMN ON CONCRETE FOOTING
NO SCALE

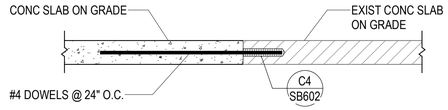

A4 / SB502 — TYPICAL CONCRETE SLAB ON GRADE EPOXY DETAIL
NO SCALE

A

ARCHITECT 1877
ajc architects
703 east 1700 south
salt lake city, utah 84105
ph: 801.466.8818
fx: 801.466.4411
www.ajcarchitects.com
LICENSED CERTIFIED STRUCTURAL ENGINEER NO. 170418 JEFFREY THOMAS MILLER UTAH
5/18/20

CONSULTANT
REAVELEY Engineers
675 East 500 South, Suite 400
Salt Lake City, UT 84102
P 801 486 3883
F 801 485 0911
www.reaveley.com

OWNER INFORMATION

PROJECT DESCRIPTION
UNIVERSITY OF UTAH DUMKE GYMNASTICS BUILDING
1825 E. SOUTH CAMPUS DRIVE
SALT LAKE CITY, UTAH 84112

AHJ STAMP

SHEET NAME:
FOOTING & FOUNDATION DETAILS

REVISIONS

MARK	DATE	DESCRIPTION

ISSUE DATA

ISSUE DATE:	10.04.21
ISSUE TYPE:	CD
DRAWN BY:	PD/RH
CHECKED BY:	CT/GO
CLIENT PROJECT#:	1877

SHEET NUMBER:
SB502

ALL IDEAS, DESIGNS, ARRANGEMENTS AND PLANS INDICATED OR REPRESENTED BY THIS DRAWING ARE OWNED BY AND THE PROPERTY OF AJC ARCHITECTS PC AND WERE CREATED, EVOLVED AND DEVELOPED FOR USE ON AND IN CONNECTION WITH THE SPECIFIED PROJECT. NONE OF THE IDEAS, DESIGNS, ARRANGEMENTS OR PLANS SHALL BE USED BY OR DISCLOSED TO ANY PERSON, FIRM OR CORPORATION FOR ANY PURPOSE WHATSOEVER WITHOUT WRITTEN CONSENT OF AJC ARCHITECTS PC. WRITTEN DIMENSIONS ON THESE DRAWINGS SHALL HAVE PRECEDENCE OVER SCALE DIMENSIONS. CONTRACTORS SHALL VERIFY AND BE RESPONSIBLE FOR ALL DIMENSIONS AND CONDITIONS ON THE JOB AND THIS OFFICE MUST BE NOTIFIED OF ANY VARIATION FROM THE DIMENSIONS AND CONDITIONS SHOWN BY THESE DRAWINGS. WARNING: REPRODUCTION HEREOF IS A CRIMINAL OFFENSE UNDER 18 U.S.C. SEC. 506. UNAUTHORIZED DISCLOSURE MAY CONSTITUTE TRADE SECRET MISAPPROPRIATION IN VIOLATION OF 17 U.S.C. § 1 ET. SEQ. AND OTHER LAWS.

10/4/2021 11:12:55 AM C:\Revit Models\2019-313 UU Dumke Gymnastics Remodel_pdelgado\X99DX.rvt

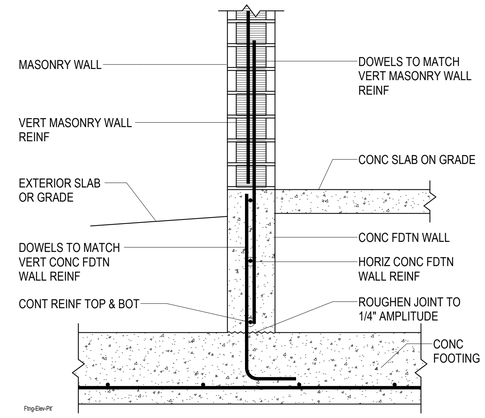

C1 SB503 MASONRY WALL ON FOUNDATION WALL
NO SCALE

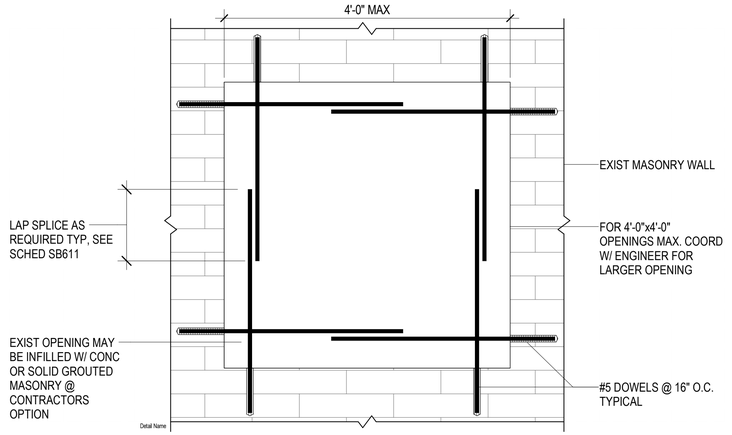

C2 SB503 TYP EXISTING MASONRY WALL INFILL ELEVATION
NO SCALE

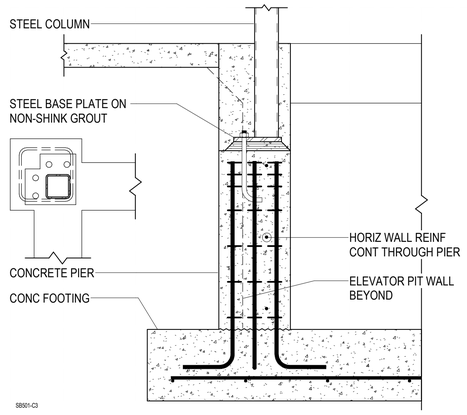

C3 SB503 STEEL COLUMN ON CONC PIER AT ELEVATOR
NO SCALE

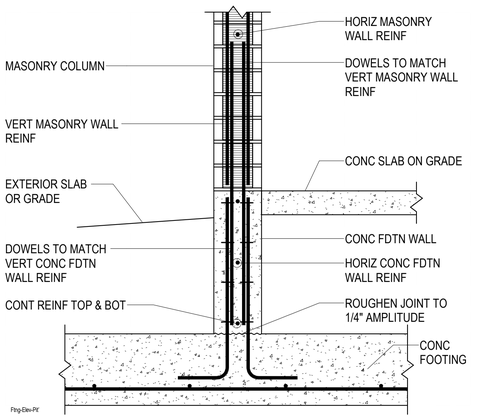

B1 SB503 MASONRY COLUMN ON FOUNDATION WALL
NO SCALE

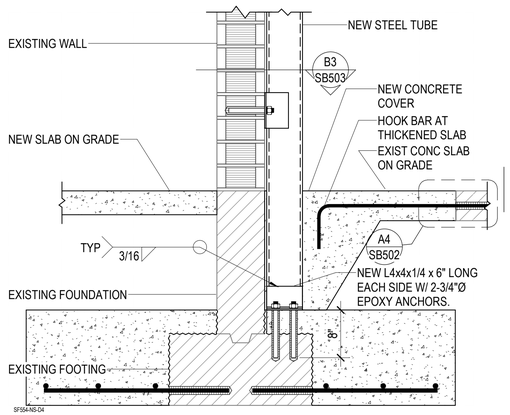

B2 SB503 CONNECTION OF NEW STEEL TUBE TO EXISTING CONCRETE SLAB ON GRADE
NO SCALE

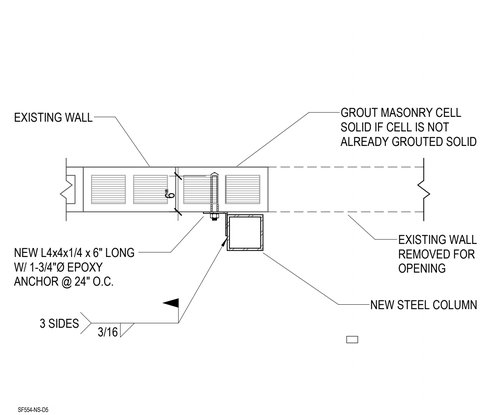

B3 SB503 NEW STEEL TUBE CONNECTION TO EXISTING WALL (JAMB, PLAN VIEW)
NO SCALE

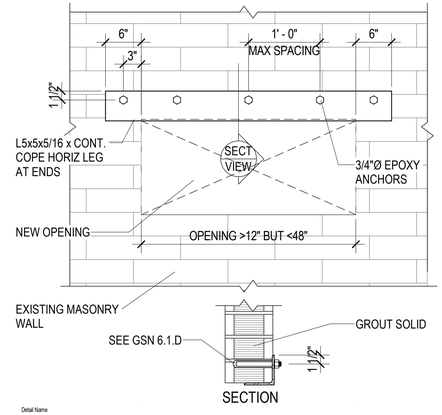

B4 SB503 NEW OPENING IN EXISTING BRICK WALL
NO SCALE

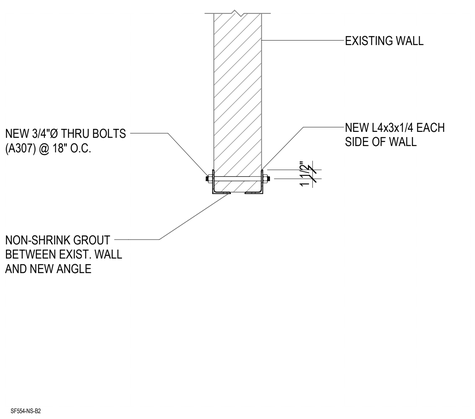

A1 SB503 TYPICAL SECTION HEAD & JAMB
NO SCALE

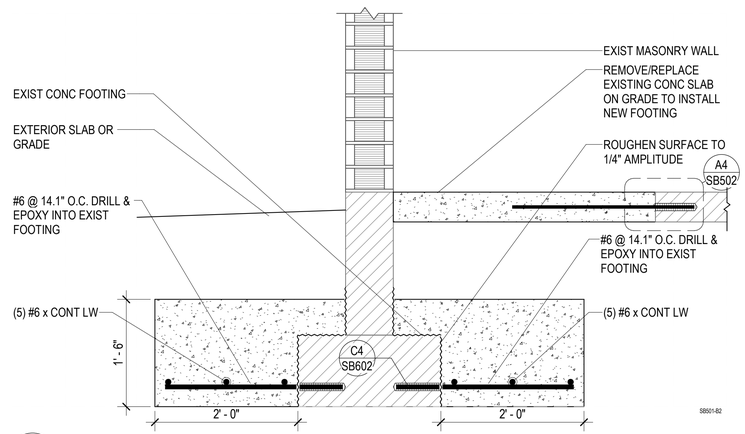

A4 SB503 NEW FOOTING AT EXISTING FOOTING
NO SCALE

ARCHITECT 1877
ajc architects
703 east 1700 south
salt lake city, utah 84105
ph: 801.466.8818
fx: 801.466.4411
www.ajcarchitects.com
JEFFREY THOMAS MILLER
UTAH
5/18/20

CONSULTANT
REAVELEY Engineers
675 East 500 South, Suite 400
Salt Lake City, UT 84102
P 801 486 3883
F 801 485 0911
www.reaveley.com

OWNER INFORMATION

PROJECT DESCRIPTION
UNIVERSITY OF UTAH DUMKE GYMNASTICS BUILDING
1825 E. SOUTH CAMPUS DRIVE
SALT LAKE CITY, UTAH 84112

AHJ STAMP

SHEET NAME:
FOOTING & FOUNDATION DETAILS

REVISIONS

MARK	DATE	DESCRIPTION

ISSUE DATA

ISSUE DATE:	10.04.21
ISSUE TYPE:	CD
DRAWN BY:	PD/RH
CHECKED BY:	CT/GO
CLIENT PROJECT#:	1877

SHEET NUMBER:
SB503

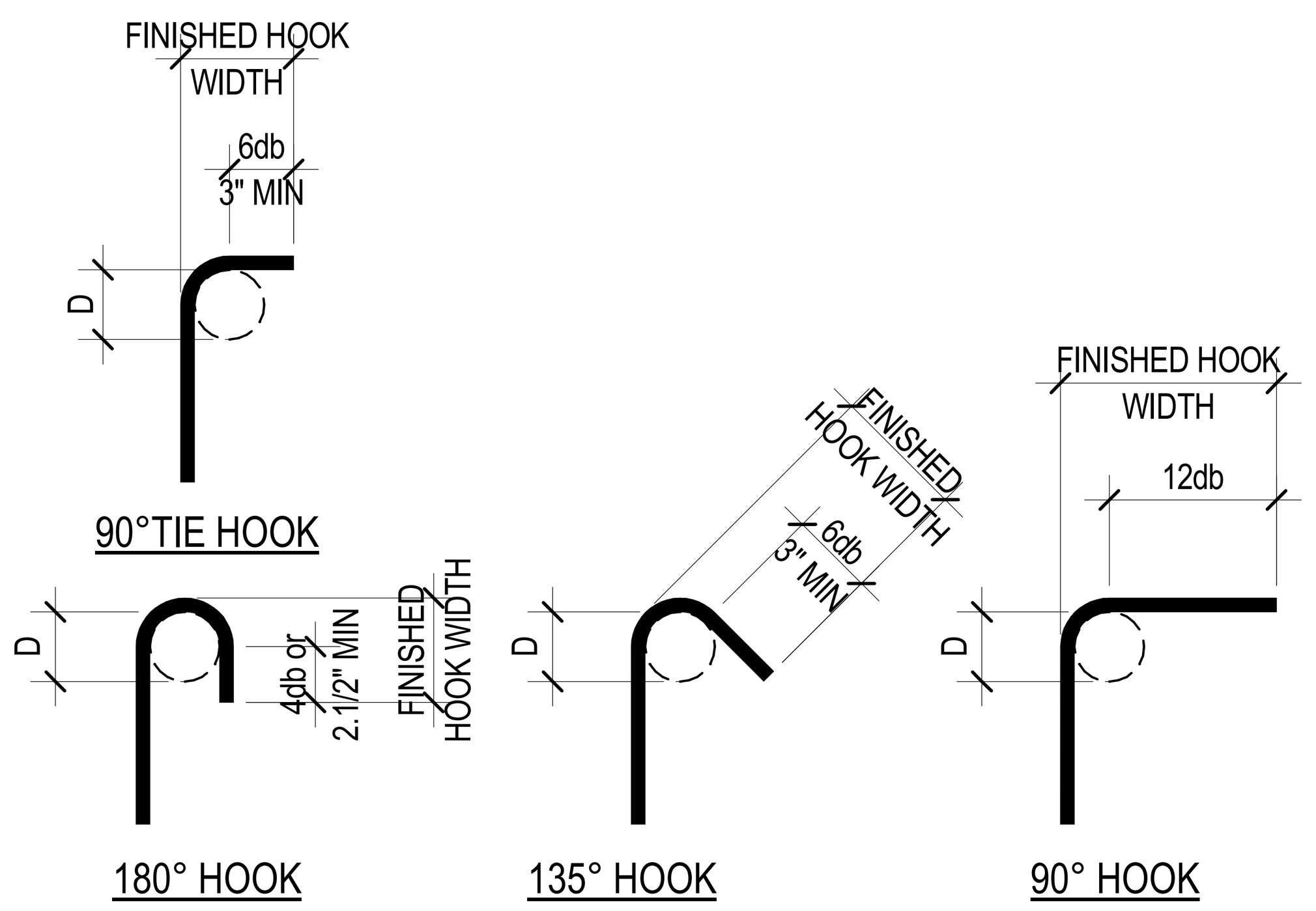

END HOOK SCHEDULE					
BAR SIZE	D	FINISHED HOOK WIDTH			
		180° HOOK	135° HOOK	90° HOOK	90° TIE HOOK
#3	2.1/4"	3"	4.1/4"	6"	4"
#4	3"	4"	4.1/2"	8"	4.1/2"
#5	3.1/4"	5"	5.1/2"	10"	6"
#6	4.1/2"	6"	8"	12"	--
#7	5.1/4"	7"	9"	14"	--
#8	6"	8"	10.1/2"	16"	--
#9	9.1/2"	11.3/4"	--	19"	--
#10	10.3/4"	13.1/4"	--	22"	--
#11	12"	14.3/4"	--	24"	--
#14	18.1/4"	21.3/4"	--	31"	--
#18	24"	28.1/2"	--	41"	--

Sched - End-Hook

D1 SB601 REINFORCEMENT END HOOK SCHEDULE
NO SCALE

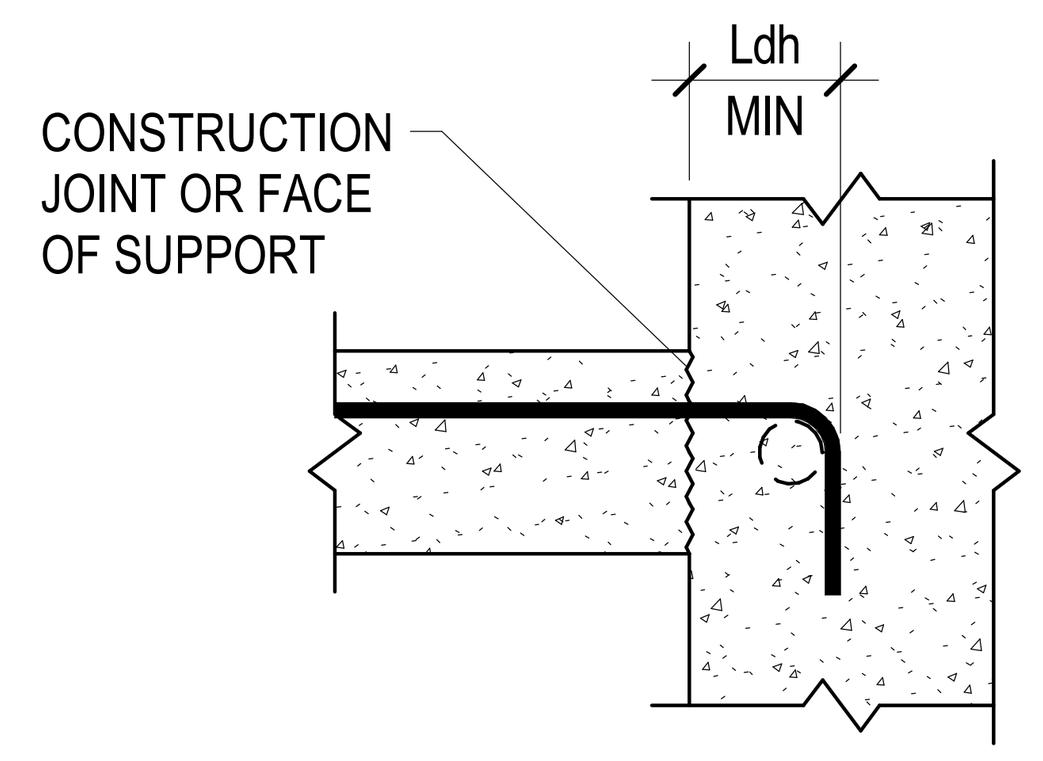

TENSION HOOK DEVELOPMENT LENGTH (Ldh)					
BAR SIZE	NORMAL WEIGHT CONCRETE, f'c = PSI				
	3,000	4,000	4,500	5,000	6,000
#3	6"	6"	6"	6"	6"
#4	8"	7"	7"	7"	7"
#5	10"	9"	8"	8"	7"
#6	12"	10"	10"	9"	8"
#7	14"	12"	11"	11"	10"
#8	16"	14"	13"	12"	11"
#9	18"	15"	14"	14"	13"
#10	20"	17"	16"	15"	14"
#11	22"	19"	18"	17"	16"
#14	37"	32"	31"	29"	27"
#18	50"	43"	41"	39"	35"

NOTES:
1. VALUES HERE VALID FOR ALL CASES IF:
SIDE COVER ≥ 2.1/2"
END COVER ≥ 2"

2. MULTIPLY VALUES IN SCHEDULE BY 1.33 FOR LIGHTWEIGHT CONCRETE

3. MULTIPLY VALUES IN SCHEDULE BY 1.2 FOR USE WITH EPOXY COATED REBAR

Sched - Tension-Hook

D2 SB601 TENSION HOOK DEVELOPMENT SCHEDULE
NO SCALE

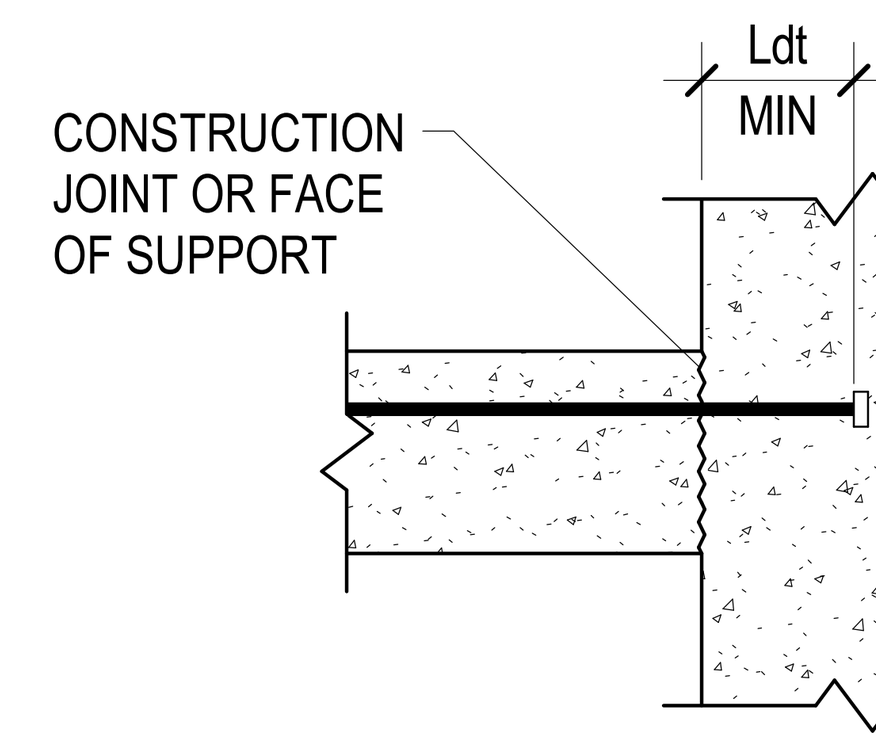

TENSION HEADED BAR DEVELOPMENT LENGTH (Ldt)					
BAR SIZE	NORMAL WEIGHT CONCRETE, f'c = PSI				
	3,000	4,000	4,500	5,000	6,000
#3	7"	6"	6"	6"	6"
#4	9"	8"	8"	7"	7"
#5	11"	10"	9"	9"	8"
#6	14"	12"	11"	11"	10"
#7	16"	14"	13"	12"	11"
#8	18"	16"	15"	14"	13"
#9	20"	18"	17"	16"	14"
#10	23"	20"	19"	18"	16"
#11	25"	22"	21"	20"	18"

NOTES:
1. VALUES HERE VALID FOR ALL CASES IF:
A. CLEAR COVER OF BAR ≥ 2*db. WHERE db IS BAR DIAMETER IN INCHES
B. CLEAR SPACING BETWEEN BARS ≥ 4*db
C. NET BEARING AREA OF HEAD Abrg ≥ 4*Ab, WHERE Ab IS AREA OF BAR

2. MULTIPLY VALUES IN SCHEDULE BY 1.2 FOR USE WITH EPOXY COATED REBAR.

3. FOR GRADE 60 REINFORCING ONLY.

Sched - Tension-Headed

D3 SB601 TENSION HEADED BAR DEVELOPMENT SCHEDULE
NO SCALE

CONCRETE FOUNDATION WALL SCHEDULE					
MARK	THICK	HORIZONTAL REINFORCING	VERTICAL REINFORCING	T & B HORIZ. BARS	PLACEMENT
CFW-1	8"	#5@15" O.C.	#4@16" O.C.	#5 x CONT E.F.	TYPE A
CFW-2	8"	#5@12" O.C. I.F.	#5@10" O.C. I.F.	#5 x CONT E.F.	TYPE B

NOTES:
1. HORIZONTAL WALL REINFORCING SHALL BE CONTINUOUS THRU CONSTRUCTION & CONTROL JOINTS.
2. SPLICES IN HORIZONTAL WALL REINFORCING SHALL BE TYPE Lsb, STAGGERED SUCH THAT SPLICES DO NOT OVERLAP. SPLICES IN TWO CURTAINS SHALL NOT OCCUR IN THE SAME LOCATION.

PLACEMENT TYPE

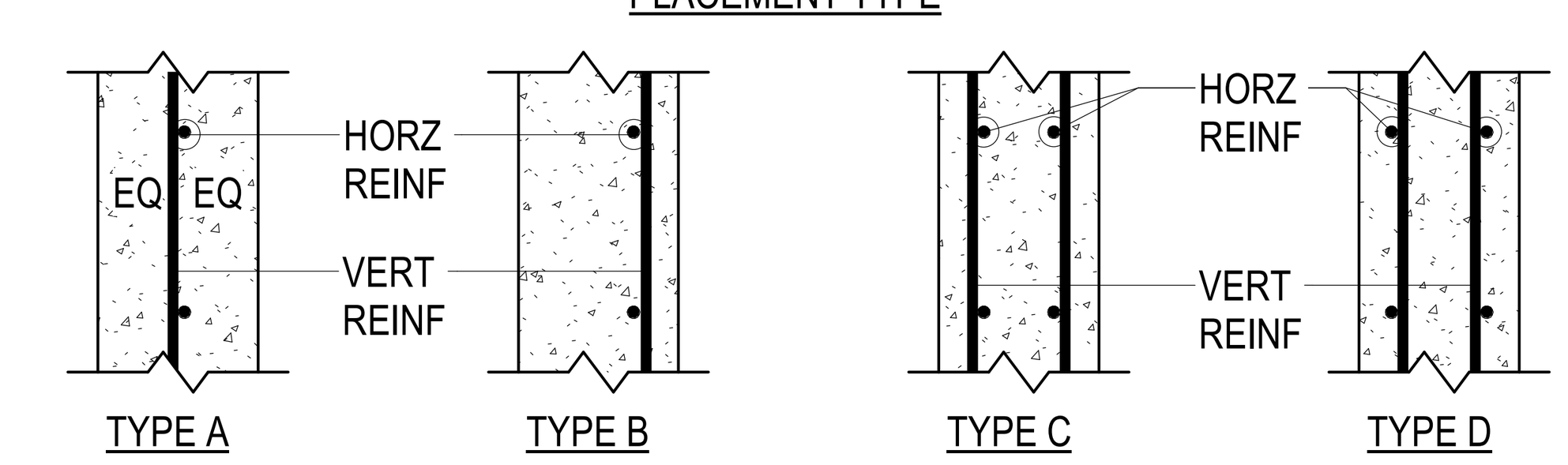

E.F. = EACH FACE
O.F. = OUTSIDE FACE (AGAINST SOIL)
I.F. = INSIDE FACE
3L = THREE LAYERS

CONCRETE FOOTING SCHEDULE												
MARK	WIDTH	LENGTH	THICK	CROSSWISE REINFORCING				LENGTHWISE REINFORCING				REMARKS
				NO.	SIZE	LENGTH	SPACE	NO.	SIZE	LENGTH	SPACE	
FTS2.0	2' - 0"	CONT.	1' - 0"	--	NONE	REQ'D	--	3	#4	CONT.	9"	
FC3.0	3' - 0"	CONT.	1' - 0"	--	#5	2'-0"	14"	3	#5	CONT.	12"	
FC5.0	5' - 0"	CONT.	2' - 0"	21	#6	4' - 6"	11.8"	6	#6	CONT.	11.1"	
FS3.0	3' - 0"	3' - 0"	1' - 0"	4	#4	2' - 6"	10"	4	#4	2' - 6"	10"	
FS4.0	4' - 0"	4' - 0"	1' - 1"	6	#4	3' - 6"	8.4"	6	#4	3' - 6"	8.4"	

1. PLACE ALL FOOTING REINFORCING IN BOTTOM OF FOOTING WITH 3" CLEAR CONCRETE COVER UNLESS NOTED OTHERWISE.
2. TOP REINFORCING, WHERE SPECIFIED, SHALL BE PLACED IN THE TOP OF THE FOOTING WITH 2" CLEAR CONCRETE COVER.
3. SPOT FOOTINGS SHALL BE CENTERED UNDER COLUMNS AND CONTINUOUS FOOTINGS SHALL BE CENTERED UNDER WALLS, UNLESS NOTED OTHERWISE.
4. ALL FOOTINGS SHALL BE FORMED. FOOTINGS SHALL NOT BE EARTH FORMED OR OVERSIZED WITHOUT WRITTEN PERMISSION FROM THE STRUCTURAL ENGINEER.

CONCRETE BEAM SCHEDULE					
MARK	DIMENSIONS		REINFORCING		REMARKS
	DEPTH	WIDTH	HORIZONTAL	TIES	
CB-1	4' - 8"	1' - 2"	3- #5 TOP 4- #8 BOTTOM	#4 @ 6" O.C.	#4 @ 10" O.C. E.F. INTERMEDIATE
CB-2	4' - 8"	1' - 2"	5- #8 TOP 5- #8 BOTTOM	#4 @ 6" O.C.	#4 @ 10" O.C. E.F. INTERMEDIATE

NOTE:
1. ALL TIES SHALL BE CLOSED
2. FACE BARS SHALL BE HOOKED AT BEAM ENDS

CONCRETE COLUMN SCHEDULE					
MARK	DIMENSIONS		VERT. REINF.	REINFORCING	REMARKS
	DEPTH	WIDTH		TIES	
CC-1	1' - 4"	1' - 0"	8- #8	#4 @ 6" O.C.	SEE NOTE 1
CC-2	1' - 4"	1' - 0"	8- #8	#4 @ 6" O.C.	

NOTES:
1. COLUMN DEPTH 1' - 4" MIN. DEEP AT TOP, BASE IS DEEPER, SEE DETAILS.

CONCRETE PIER SCHEDULE					
MARK	DIMENSIONS		REINFORCING		REMARKS
	DEPTH	WIDTH	VERTICAL	TIES	
CP-1	1' - 0"	1' - 0"	8- #6	#3 @ 12" O.C.	
CP-2	1' - 8"	1' - 0"	4- #9	#4 @ 10" O.C.	

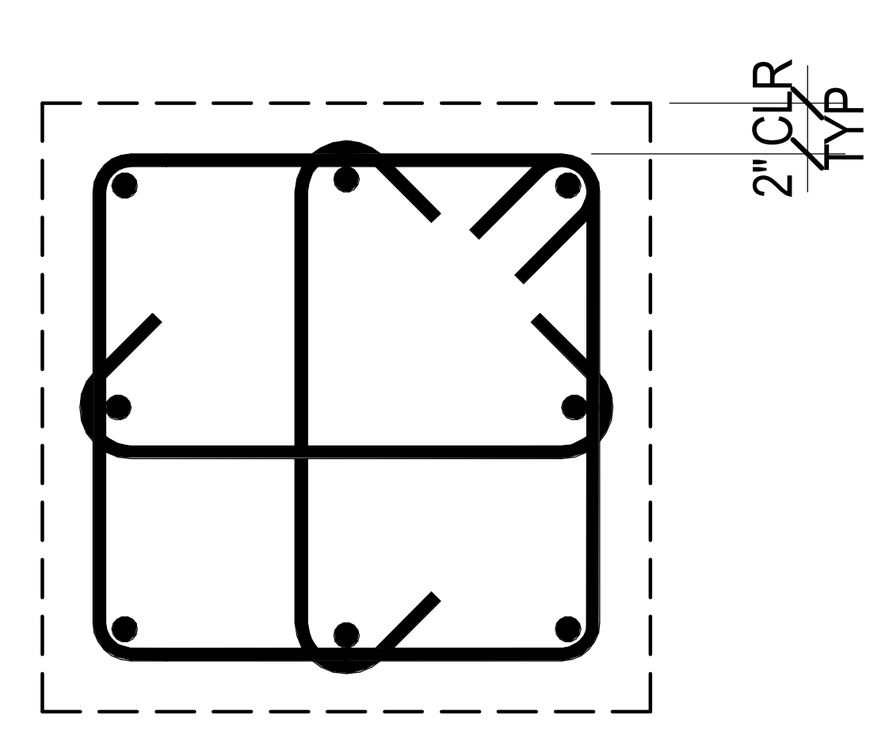

CP-1

A1 SB601 TYPICAL CONCRETE PIER REINFORCEMENT/TIE DIAGRAM
NO SCALE

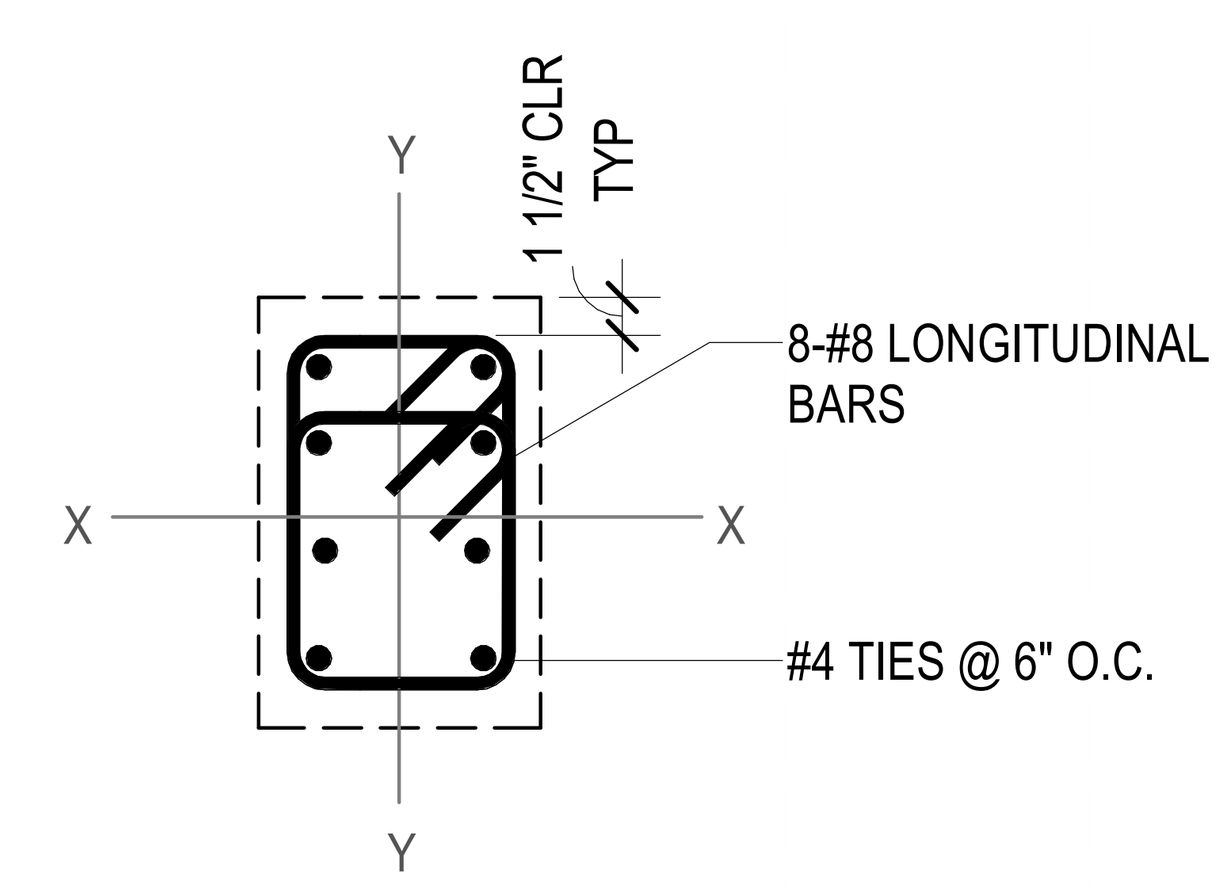

CC1,CC-2

A2 SB601 CONCRETE COLUMN REINFORCEMENT/TIE DIAGRAM
NO SCALE

CONCRETE REINFORCING BAR DEVELOPMENT AND LAP SPLICE LENGTH SCHEDULE

Sched - Reinf-Splice

BAR SIZE	f'c = 3000 PSI				f'c = 4000 PSI				f'c = 4500 PSI				f'c = 5000 PSI				f'c = 6000 PSI				f'c = ALL	
	Ld	Lt	Lsb	Lsbt	Ld	Lt	Lsb	Lsbt	Ld	Lt	Lsb	Lsbt	Ld	Lt	Lsb	Lsbt	Ld	Lt	Lsb	Lsbt	Ldc	Lsc
#3	17"	22"	22"	28"	15"	19"	19"	25"	14"	18"	18"	23"	13"	17"	17"	22"	12"	16"	16"	20"	8"	12"
#4	22"	29"	29"	38"	19"	25"	25"	33"	18"	24"	24"	31"	17"	23"	23"	29"	16"	21"	21"	27"	10"	15"
#5	28"	36"	36"	47"	24"	31"	31"	41"	23"	30"	30"	38"	22"	28"	28"	36"	20"	26"	26"	33"	12"	19"
#6	33"	43"	43"	56"	29"	37"	37"	49"	27"	35"	35"	46"	26"	34"	34"	44"	24"	31"	31"	40"	15"	23"
#7	48"	63"	63"	81"	42"	54"	54"	71"	40"	51"	51"	67"	38"	49"	49"	63"	34"	45"	45"	58"	17"	27"
#8	55"	72"	72"	93"	48"	62"	62"	81"	45"	59"	59"	76"	43"	56"	56"	72"	39"	51"	51"	66"	19"	30"
#9	62"	81"	81"	105"	54"	70"	70"	91"	51"	66"	66"	86"	48"	63"	63"	81"	44"	57"	57"	74"	22"	34"
#10	70"	91"	91"	118"	61"	79"	79"	102"	57"	74"	74"	96"	54"	71"	71"	92"	50"	64"	64"	84"	24"	39"
#11	78"	101"	101"	131"	67"	87"	87"	114"	64"	82"	82"	107"	60"	78"	78"	102"	55"	71"	71"	93"	27"	43"
#14	93"	121"	NA	NA	81"	105"	NA	NA	76"	99"	NA	NA	72"	94"	NA	NA	66"	86"	NA	NA	33"	NA
#18	124"	161"	NA	NA	108"	140"	NA	NA	101"	132"	NA	NA	96"	125"	NA	NA	88"	114"	NA	NA	43"	NA

NOTES:
1. DEFINITIONS:
Ld: TENSION DEVELOPMENT LENGTH FOR REINFORCEMENT SATISFYING THE FOLLOWING CONDITIONS:
SLABS AND WALLS: CLEAR SPACING > 2db AND CONCRETE CLEAR COVER > db
BEAMS AND COLUMNS: CLEAR COVER SPACING > db AND CONCRETE CLEAR COVER > db
Lt: DEVELOPMENT LENGTH FOR TOP BARS IN TENSION
Lsb: TENSION LAP SPLICE LENGTH FOR OTHER THAN TOP BARS (CLASS B)
Lsbt: TENSION LAP SPLICE LENGTH OF TOP BARS.
Ldc: DEVELOPMENT LENGTH FOR BARS IN COMPRESSION
Lsc: TIED COLUMN LAP SPLICE IN COMPRESSION
db: NOMINAL BAR DIAMETER (INCHES)
TOP BARS: HORIZONTAL BEAM REINFORCEMENT WITH MORE THAN 12 INCHES OF CONCRETE CAST BELOW

2. MULTIPLY VALUES IN SCHEDULE BY 1.5 IF CLEAR SPACING OR CONCRETE COVER DO NOT MEET REQUIREMENTS FOR Ld IN NOTE 1.

3. MULTIPLY VALUES IN SCHEDULE BY 1.3 FOR USE IN LIGHTWEIGHT AGGREGATE CONCRETE.

4. FOR EPOXY COATED BAR: MULTIPLY VALUES IN SCHEDULE BY 1.5 FOR BARS WITH CLEAR COVER < 3db OR CLEAR SPACING < 6db. OTHERWISE MULTIPLY VALUES BY 1.2.

5. a. FOR BUNDLED BARS OF THREE OR LESS MULTIPLY LENGTHS BY 1.2.
b. FOR BUNDLED BARS OF FOUR OR MORE MULTIPLY LENGTHS BY 1.33.
c. INDIVIDUAL BAR SPLICES WITHIN A BUNDLE SHALL NOT OVERLAP. ENTIRE BUNDLES SHALL NOT BE LAP SPLICED.

6. SCHEDULE LENGTHS ARE FOR fy=60ksi REINFORCING, MULTIPLY LENGTHS BY 1.25 FOR fy=75ksi REINFORCING.

7. LAP SPLICES ARE NOT PERMITTED FOR #14 & #18 BARS. USE BAR COUPLERS PER G.S.N.

ARCHITECT 1877
ajc architects
703 east 1700 south
salt lake city, utah 84105
ph: 801.466.8818
fx: 801.466.4411
www.ajcarchitects.com

LICENSED CERTIFIED STRUCTURAL ENGINEER NO. 170416 JEFFERY THOMAS MILLER UTAH
5/18/20

CONSULTANT
REAVELEY Engineers
675 East 500 South, Suite 400
Salt Lake City, UT 84102
P 801 486 3883
F 801 485 0911
www.reaveley.com

OWNER INFORMATION

PROJECT DESCRIPTION
UNIVERSITY OF UTAH DUMKE GYMNASTICS BUILDING
1825 E. SOUTH CAMPUS DRIVE
SALT LAKE CITY, UTAH 84112

AHJ STAMP

SHEET NAME:
CONCRETE SCHEDULES

REVISIONS
MARK DATE DESCRIPTION

ISSUE DATA
ISSUE DATE: 10.04.21
ISSUE TYPE: CD
DRAWN BY: PD/RH
CHECKED BY: CT/GO
CLIENT PROJECT#:1877

SHEET NUMBER:
SB601

10/4/2021 11:12:57 AM C:\Revit Models\2019-313 UU Dumke Gymnastics Remodel_pdelgadoXR9DX.rvt

ALL IDEAS, DESIGNS, ARRANGEMENTS OR PLANS INDICATED OR REPRESENTED BY THIS DRAWING ARE OWNED BY AND THE PROPERTY OF AJC ARCHITECTS PC AND WERE CREATED, EVOLVED, AND DEVELOPED FOR USE ON AND IN CONNECTION WITH THE SPECIFIED PROJECT. NONE OF THE IDEAS, DESIGNS, ARRANGEMENTS OR PLANS SHALL BE USED BY OR DISCLOSED TO ANY PERSON, FIRM, OR CORPORATION FOR ANY PURPOSE WHATSOEVER WITHOUT WRITTEN CONSENT OF AJC ARCHITECTS PC. WRITTEN DIMENSIONS ON THESE DRAWINGS SHALL HAVE PRECEDENCE OVER SCALE DIMENSIONS. CONTRACTORS SHALL VERIFY AND BE RESPONSIBLE FOR ALL DIMENSIONS AND CONDITIONS ON THE JOB AND THIS OFFICE MUST BE NOTIFIED OF ANY VARIATION FROM THE DIMENSIONS AND CONDITIONS SHOWN BY THESE DRAWINGS. WARNING: REPRODUCTION HEREOF IS A CRIMINAL OFFENSE UNDER 18 U.S.C. SEC. 506. UNAUTHORIZED DISCLOSURE MAY CONSTITUTE TRADE SECRET MISAPPROPRIATION IN VIOLATION OF I.C.24-2-31-1 ET. SEQ. AND OTHER LAWS.

10/4/2021 11:12:58 AM C:\Revit Models\2019-313 UU Dumke Gymnastics Remodel_pdelgadoXR9DX.rvt

ALL IDEAS, DESIGNS, ARRANGEMENTS AND PLANS INDICATED OR REPRESENTED BY THIS DRAWING ARE OWNED BY, AND THE PROPERTY OF, AJC ARCHITECTS PC, AND WERE CREATED, EVOLVED, AND DEVELOPED FOR USE ON, AND IN CONNECTION WITH, THE SPECIFIED PROJECT. NONE OF THE IDEAS, DESIGNS, ARRANGEMENTS OR PLANS SHALL BE USED BY OR DISCLOSED TO ANY PERSON, FIRM, OR CORPORATION FOR ANY PURPOSE WHATSOEVER WITHOUT WRITTEN CONSENT OF AJC ARCHITECTS PC. WRITTEN DIMENSIONS ON THESE DRAWINGS SHALL HAVE PRECEDENCE OVER SCALE DIMENSIONS. CONTRACTORS SHALL VERIFY AND BE RESPONSIBLE FOR ALL DIMENSIONS AND CONDITIONS ON THE JOB AND THIS OFFICE MUST BE NOTIFIED OF ANY VARIATION FROM THE DIMENSIONS AND CONDITIONS SHOWN BY THESE DRAWINGS. WARNING: REPRODUCTION HEREOF IS A CRIMINAL OFFENSE UNDER 18 U.S.C. 506, UNAUTHORIZED DISCLOSURE MAY CONSTITUTE TRADE SECRET MISAPPROPRIATION IN VIOLATION OF (IC 24-2-3) I.T. SEQ. AND OTHER LAWS.

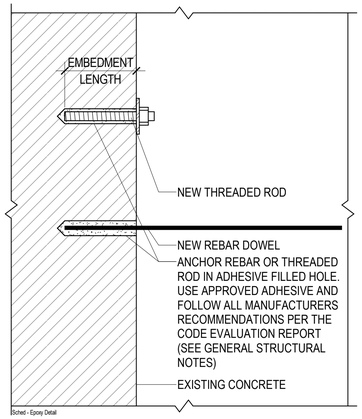

ADHESIVE ANCHORS IN CONCRETE SCHEDULE			
REINFORCING BAR		THREADED ROD	
DOWEL SIZE	EMBEDMENT LENGTH (SEE NOTE #2)	SIZE	EMBEDMENT LENGTH (SEE NOTE #2)
#3	4"	3/8"Ø	4 1/2"
#4	6"	1/2"Ø	6"
#5	9"	5/8"Ø	7 1/2"
#6	10"	3/4"Ø	9"
#7	12 1/2"	7/8"Ø	10 1/2"
#8	13"	1"Ø	12"
#9	14"	1 1/4"Ø	15"
#10	18"		
#11	19"		

NOTES:

1. THIS SCHEDULE SHALL BE USED ONLY WHERE SPECIFICALLY REFERENCED ON THE DRAWINGS AND AT OTHER LOCATIONS WITH APPROVAL OF THE STRUCTURAL ENGINEER.
2. EMBEDMENT LENGTHS SPECIFIED ON PLANS OR DETAILS TAKE PRECEDENCE OVER EMBEDMENT LENGTHS IN THIS SCHEDULE.
3. WHERE THE THICKNESS OF THE EXISTING CONCRETE MEMBER IS NOT SUFFICIENT TO ACHIEVE SCHEDULED EMBEDMENT AND SPECIFIED CLEAR COVER FOR THE ANCHOR, CONTACT THE STRUCTURAL ENGINEER.
4. SEE GENERAL STRUCTURAL NOTES FOR LIST OF APPROVED ADHESIVES AND OTHER REQUIREMENTS FOR ADHESIVE ANCHORING.

C4 / SB602 ADHESIVE ANCHORS IN CONCRETE SCHEDULE

NO SCALE

SCREW ANCHORS IN CONCRETE SCHEDULE				
ANCHOR SIZE	MINIMUM EDGE DISTANCE (Cac)	EMBEDMENT LENGTH (H nom)	MINIMUM CONCRETE THICKNESS (H min)	MINIMUM ANCHOR SPACING (S min)
3/8"Ø	3.3/4"	3.1/4"	5"	3"
1/2"Ø	4.1/2"	4"	6.1/4"	3.1/2"
5/8"Ø	6.3/8"	5.1/2	8.1/2"	3.3/4"
3/4"Ø	7.5/16"	6.1/4"	10"	4.1/2"

NOTES:

1. THIS SCHEDULE SHALL BE USED ONLY WHERE SPECIFICALLY REFERENCED ON THE DRAWINGS AND AT OTHER LOCATIONS WITH APPROVAL OF THE STRUCTURAL ENGINEER.
2. EDGE DISTANCE, Cac, AND EMBEDMENT LENGTHS, H nom, AND ANCHOR SPACING SPECIFIED ON PLANS OR DETAILS TAKE PRECEDENCE OVER VALUES IN THIS SCHEDULE.
3. ANCHORS LOCATED WHERE THE THICKNESS OF THE EXISTING CONCRETE MEMBER DOES NOT MEET THE REQUIRED MINIMUM CONCRETE THICKNESS MUST BE APPROVED BY THE STRUCTURAL ENGINEER PRIOR TO INSTALLATION..
4. SPECIAL INSPECTION IS REQUIRED DURING INSTALLATION OF ALL SCREW ANCHORS PER THE CODE EVALUATION REPORT FOR THE ANCHOR AND THE QUALITY ASSURANCE SECTION OF THE GENERAL STRUCTURAL NOTES.
5. SEE GENERAL STRUCTURAL NOTES FOR LIST OF APPROVED ANCHORS AND OTHER REQUIREMENTS FOR USING SCREW ANCHORS.
6. SCREW ANCHORS SHALL ONLY BE USED IN INTERIOR DRY LOCATIONS

B4 / SB602 SCREW ANCHORS IN CONCRETE SCHEDULE

NO SCALE

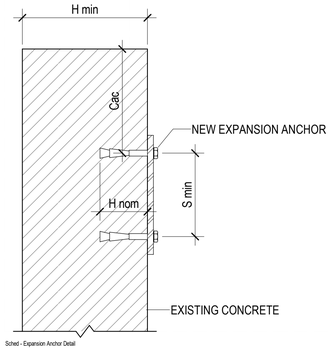

EXPANSION ANCHORS IN CONCRETE SCHEDULE				
ANCHOR SIZE	MINIMUM EDGE DISTANCE (Cac)	EMBEDMENT LENGTH (H nom)	MINIMUM CONCRETE THICKNESS (H min)	MINIMUM ANCHOR SPACING (S min)
3/8"Ø	6.1/2"	2.7/8"	4.1/2"	3.3/4"
1/2"Ø	10"	3.7/8"	6"	5"
5/8"Ø	10"	5.1/8"	8"	6"
3/4"Ø	16"	5.3/4"	10"	7"

NOTES:

1. THIS SCHEDULE SHALL BE USED ONLY WHERE SPECIFICALLY REFERENCED ON THE DRAWINGS. ANCHORS AT OTHER LOCATIONS MUST BE APPROVED BY THE ENGINEER PRIOR TO INSTALLATION.
2. EDGE DISTANCE, Cac, AND EMBEDMENT LENGTHS, H nom, AND ANCHOR SPACING SPECIFIED ON PLANS OR DETAILS TAKE PRECEDENCE OVER VALUES IN THIS SCHEDULE.
3. ANCHORS LOCATED WHERE THE THICKNESS OF THE EXISTING CONCRETE MEMBER DOES NOT MEET THE REQUIRED MINIMUM CONCRETE THICKNESS MUST BE APPROVED BY THE STRUCTURAL ENGINEER PRIOR TO INSTALLATION.
4. SEE GENERAL STRUCTURAL NOTES FOR LIST OF APPROVED ANCHORS AND OTHER REQUIREMENTS FOR USING EXPANSION ANCHORS.

A4 / SB602 EXPANSION ANCHORS IN CONCRETE SCHEDULE

NO SCALE

ARCHITECT 1877

ajc architects

703 east 1700 south
salt lake city, utah 84105
ph: 801.466.8818
fx: 801.466.4411
www.ajcarchitects.com

LICENSED CERTIFIED STRUCTURAL ENGINEER
NO. 170418
JEFFERY THOMAS MILLER
UTAH
5/18/20

CONSULTANT

REAVELEY Engineers
675 East 500 South, Suite 400
Salt Lake City, UT 84102
P 801 486 3883
F 801 485 0911
www.reaveley.com

OWNER INFORMATION

PROJECT DESCRIPTION

UNIVERSITY OF UTAH DUMKE GYMNASTICS BUILDING

1825 E. SOUTH CAMPUS DRIVE
SALT LAKE CITY, UTAH 84112

AHJ STAMP

SHEET NAME:

CONCRETE SCHEDULES

REVISIONS

MARK	DATE	DESCRIPTION

ISSUE DATA

ISSUE DATE:	10.04.21
ISSUE TYPE:	CD
DRAWN BY:	PD/RH
CHECKED BY:	CT/GO
CLIENT PROJECT#:	1877

SHEET NUMBER:

SB602

10/4/2021 11:12:58 AM C:\Revit Models\2019-313 UU Dumke Gymnastics Remodel_pdelgadoXR9DX.rvt

ALL IDEAS, DESIGNS, ARRANGEMENTS AND PLANS INDICATED OR REPRESENTED BY THIS DRAWING ARE OWNED BY AND THE PROPERTY OF AJC ARCHITECTS, INC. AND WERE CREATED, EVOLVED, AND DEVELOPED FOR USE ON AND IN CONNECTION WITH THE SPECIFIED PROJECT. NONE OF THE IDEAS, DESIGNS, ARRANGEMENTS OR PLANS SHALL BE USED BY OR DISCLOSED TO ANY PERSON, FIRM, OR CORPORATION FOR ANY PURPOSE WHATSOEVER WITHOUT WRITTEN CONSENT OF AJC ARCHITECTS PC. WRITTEN DIMENSIONS ON THESE DRAWINGS SHALL HAVE PRECEDENCE OVER SCALE DIMENSIONS. CONTRACTORS SHALL VERIFY AND BE RESPONSIBLE FOR ALL DIMENSIONS AND CONDITIONS ON THE JOB AND THIS OFFICE MUST BE NOTIFIED OF ANY VARIATION FROM THE DIMENSIONS AND CONDITIONS SHOWN BY THESE DRAWINGS. WARNING: REPRODUCTION HEREOF IS A CRIMINAL OFFENSE UNDER 18 U.S.C. 506. UNAUTHORIZED DISCLOSURE MAY CONSTITUTE TRADE SECRET MISAPPROPRIATION IN VIOLATION OF 17 U.S.C. 24.2-311.1 ET. SEQ. AND OTHER LAWS.

MASONRY LINTEL SCHEDULE

ML-1

MARK	DIMENSIONS		REINFORCING		MAXIMUM SPAN	REMARKS
	DEPTH	WIDTH	HORIZONTAL	STIRRUPS		
ML-1	8"	8"	1- #4 CONT.	--	3'-4"	
ML-2	16"	8"	1- #6 CONT. TOP & BOTTOM	--	5'-4"	
ML-3	24"	8"	1- #7 CONT. TOP & BOTTOM	#3 @ 8" O.C.	8'-0"	
ML-4	32"	8"	1- #7 CONT. TOP & BOTTOM	#3 @ 8" O.C.	10'-0"	

NOTES:

1. MASONRY LINTELS ML-1 THROUGH ML-4 SHALL BE USED OVER OPENINGS IN MASONRY WALLS WHEN A SPECIFIC MASONRY LINTEL IS NOT OTHERWISE SPECIFIED. THE MASONRY LINTEL TO BE USED SHALL BE DETERMINED BY THE MAXIMUM SPAN AS SPECIFIED IN THIS SCHEDULE. WHEN A SPECIFIC MASONRY LINTEL IS CALLED OUT ON THE PLAN, THE MAXIMUM SPAN AS NOTED IN THIS SCHEDULE SHALL NOT APPLY

2. MASONRY LINTELS ML-1 THROUGH ML-4 SHALL NOT BE LOCATED BELOW ANY FLOOR, OR ROOF BEAM, OR GIRDER, OR ANY OTHER CONCENTRATED LOAD UNLESS SHOWN SPECIFICALLY ON THE PLAN SHEET. JOISTS SHALL NOT BEAR ON ANY LINTEL LESS THAN 16" DEEP.

3. FOR MASONRY LINTELS NOT SHOWN ON THE DRAWINGS THAT CARRY ANY FLOOR, OR ROOF BEAM, OR GIRDER, OR ANY OTHER CONCENTRATED LOAD, OR THAT SPAN GREATER THAN 10'-0" CONSULT THE STRUCTURAL ENGINEER.

4. EXTEND ALL HORIZONTAL REINFORCING 48 BAR DIAMETERS BEYOND THE EDGE OF THE OPENING. IF HORIZONTAL REINFORCING CANNOT BE EXTENDED 48 BAR DIAMETERS BEYOND THE EDGE OF THE OPENING, PROVIDE 90 DEGREE STANDARD HOOK.

5. GROUT MASONRY LINTELS MONOLITHICALLY WITH THE SUPPORT WALL OR COLUMN AT EACH END.

6. SPLICE TOP BARS AT MIDSPAN OF LINTEL ONLY.

7. SPLICE BOTTOM BARS OVER SUPPORTS ONLY.

8. FOR WALL ABOVE LINTEL, DOWEL VERTICAL REINFORCING INTO FULL DEPTH OF THE LINTEL OR 48 BAR DIAMETERS, WHICHEVER IS LESS.

9. HORIZONTAL WALL REINFORCING SHALL CONTINUE THROUGH MASONRY LINTELS. WHERE BOTH HORIZONTAL WALL REINFORCING AND LINTEL REINFORCING WOULD OCCUR IN THE SAME COURSE, THE LARGER BARS ARE TO REPLACE THE SMALLER BARS.

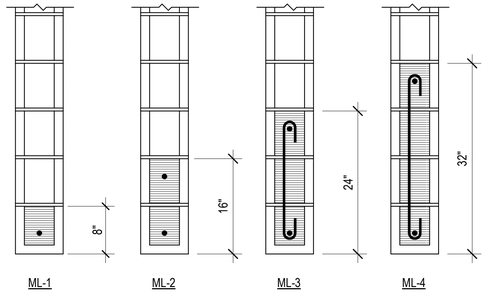

ML-DET

B1 / SB611 TYPICAL MASONRY LINTEL DETAILS

NO SCALE

MASONRY COLUMN SCHEDULE

MARK	DIMENSIONS		REINFORCING			REMARKS
	WIDTH	DEPTH	VERTICAL	TIES	TYPE	
MC-1	8"	4' - 0"	12- #6	--	TYPE 2	

NOTES

1. HORIZONTAL WALL REINFORCING BARS SHALL BE CONTINUOUS THROUGH MASONRY COLUMNS. AT WALL ENDS OR OPENINGS TERMINATE HORIZONTAL WALL REINFORCING WITH A 90° OR 180° HOOK.
2. FOR TYPE 2 & 2A COLUMNS, HORIZONTAL WALL REINFORCING SHALL BE LOCATED TO THE INSIDE OF VERTICAL COLUMN BARS..
3. UNLESS NOTED OTHERWISE, VERTICAL COLUMN REINFORCING AND TIES SHALL EXTEND THE FULL STORY HEIGHT OF THE WALL.
4. MASONRY COLUMN VERTICAL BARS OR DOWELS IN CONCRETE FOUNDATION WALLS SHALL HAVE TIES TO MATCH MASONRY COLUMN TIES.
5. VERTICAL REINFORCING IN TYPE 1 & 2 COLUMNS SHALL BE DISTRIBUTED EQUALLY IN EACH CELL.
6. PLACE VERTICAL COLUMN BARS IN EACH END CELL FOR TYPE 1A & 2A COLUMNS. REMAINING REINFORCING SHALL BE SPACED EQUALLY THROUGHOUT THE COLUMN WITH ONE BAR PER CELL FOR TYPE 1A AND TWO BARS PER CELL FOR TYPE 2A.
7. ALL CELLS IN COLUMNS SHALL BE GROUTED SOLID.

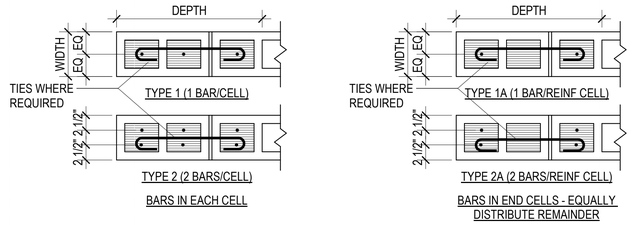

MC-PLANS-NEW

B2 / SB611 TYPICAL MASONRY COLUMN TYPES - PLAN VIEW

NO SCALE

MASONRY REINFORCING BAR LAP SPLICE SCHEDULE

BAR SIZE	f'm = 2500 psi		
	6" BRICK	8" BRICK	
	CLASS	CLASS	
	A	A	B
#3	12"	12"	12"
#4	16"	12"	20"
#5	25"	18"	33"
#6	**	34"	54"
#7	-	47"	-
#8	-	**	-
#9	-	-	-

NOTES:
1. CLASS A SPLICES MAY BE USED WHEN ONLY ONE BAR IS CONTINUOUS IN THE MASONRY CELL OR COURSE.

2. CLASS B SPLICES SHALL BE USED WHEN TWO BARS ARE CONTINUOUS IN THE MASONRY CELL OR COURSE.

3. ** INDICATES THAT A LAP SPLICE IS NOT ALLOWED AND MECHANICAL BAR COUPLERS ARE REQUIRED FOR THE BAR SPLICES. SPLICES SHALL BE OFFSET 2'-0" TO AVOID CONGESTION.

4. WHERE VERTICAL BARS HAVE A REQUIRED LAP SPLICE GREATER THAN THE HEIGHT OF THE GROUT POUR, THE BAR SPLICE SHALL BE MADE WITH A MECHANICAL BAR COUPLER. WHERE THE HEIGHT OF THE GROUT POUR EXCEEDS 60 INCHES, HIGH LIFT GROUTING PROCEDURES SHALL BE FOLLOWED.

5. WHERE MECHANICAL BAR COUPLERS ARE USED, THE CONNECTOR SHALL DEVELOP 125% OF THE SPECIFIED YIELD STRENGTH OF THE BAR IN TENSION AND COMPRESSION.

6. EXISTING MASONRY TO BE ASSUMED TO HAVE f'm = 1500 psi.

3 / SB611 SB611-MW - MRBLS-2000

SCALE: 1" = 1'-0"

MASONRY WALL SCHEDULE

MARK	WIDTH	MATERIAL	REINFORCING			REMARKS
			VERTICAL	HORIZONTAL	TYPE	
MW-1	8"	ATLAS	2- #5 @ 24" O.C.	#5 @ 32" O.C.	TYPE 3	

NOTES

1. SEE PLANS, DETAILS AND GENERAL STRUCTURAL NOTES FOR ADDITIONAL REINFORCING REQUIREMENTS.
2. GROUT SOLID ALL CELLS BELOW GRADE, CELLS CONTAINING EMBEDS (HSA'S, DBA'S, ANCHOR BOLTS, ETC.), AND CELLS CONTAINING REINFORCING. CONSOLIDATE GROUT AS PER THE GENERAL STRUCTURAL NOTES.
3. HORIZONTAL WALL REINFORCING SHALL CONTINUE THROUGH MASONRY LINTELS. WHERE BOTH HORIZONTAL WALL REINFORCING AND LINTEL REINFORCING OCCUR IN THE SAME COURSE, THE LARGER BARS ARE TO REPLACE THE SMALLER BARS.

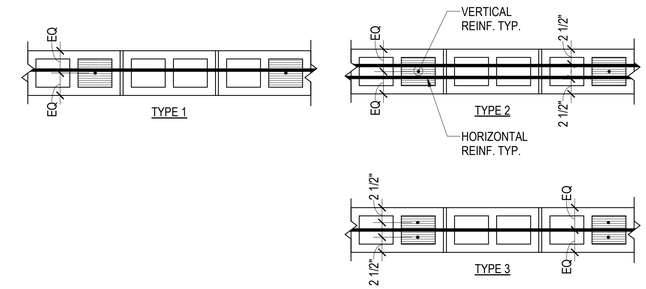

C4 / SB611 TYPICAL MASONRY WALL TYPES - PLAN VIEW

NO SCALE

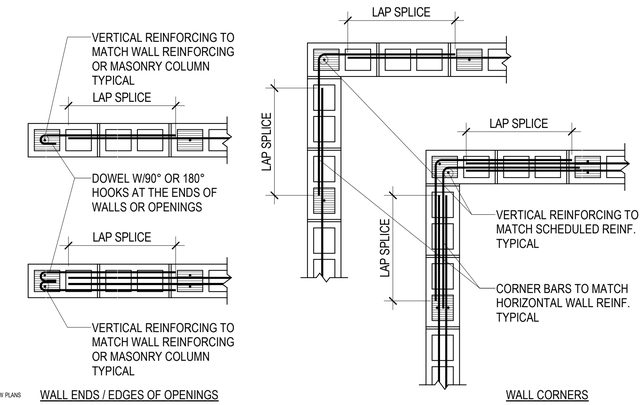

MW PLANS WALL ENDS / EDGES OF OPENINGS

WALL CORNERS

B4 / SB611 TYPICAL MASONRY WALL END, CORNER AND INTERSECTION DETAILS

NO SCALE

ARCHITECT 1877

ajc architects

703 east 1700 south
salt lake city, utah 84105
ph: 801.466.8818
fx: 801.466.4411
www.ajcarchitects.com

LICENSED CERTIFIED STRUCTURAL ENGINEER
NO. 170418
JEFFERY THOMAS MILLER
UTAH
5/18/20

CONSULTANT

REAVELEY Engineers
675 East 500 South, Suite 400
Salt Lake City, UT 84102
P 801 486 3883
F 801 485 0911
www.reaveley.com

OWNER INFORMATION

PROJECT DESCRIPTION

UNIVERSITY OF UTAH DUMKE GYMNASTICS BUILDING

1825 E. SOUTH CAMPUS DRIVE
SALT LAKE CITY, UTAH 84112

AHJ STAMP

SHEET NAME:

MASONRY SCHEDULES

REVISIONS

MARK	DATE	DESCRIPTION

ISSUE DATA

ISSUE DATE:	10.04.21
ISSUE TYPE:	CD
DRAWN BY:	PD/RH
CHECKED BY:	CT/GO
CLIENT PROJECT#:	1877

SHEET NUMBER:

SB611

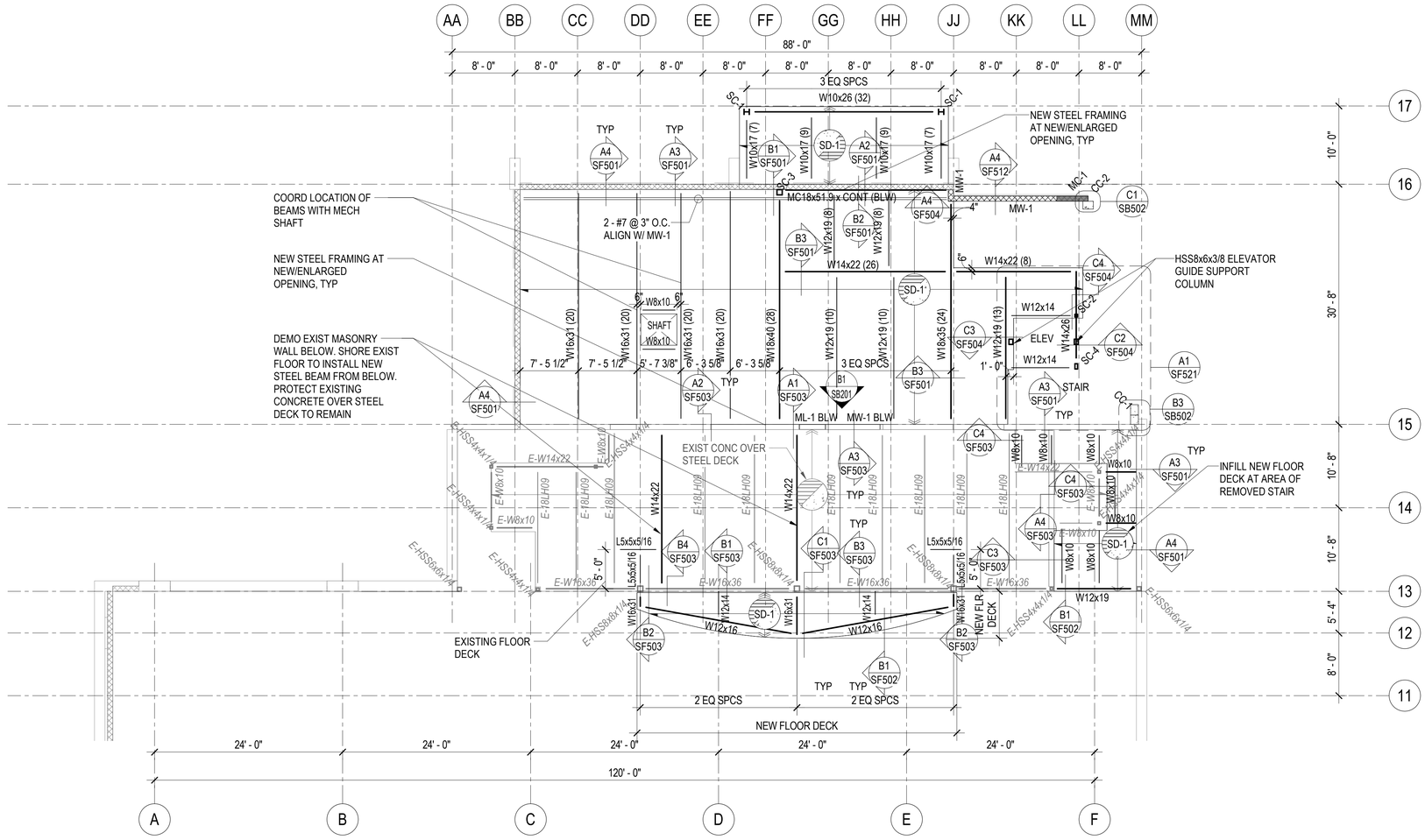

A2 / SF101 FLOOR FRAMING PLAN

SCALE: 1/8" = 1'-0"

FLOOR FRAMING PLAN NOTES

1. SEE ARCHITECTURAL DRAWINGS AND FINISH SCHEDULE FOR SLAB AREAS TO RECEIVE FLOOR TILE.

ELEVATOR NOTES

1. CONTRACTOR TO COORDINATE LOCATION OF GUIDERAIL SUPPORT COLUMNS, SEPARATOR BEAMS, MACHINE BEAMS AND HOIST BEAMS. MEMBERS SHOWN ARE SCHEMATIC AND MAY CHANGE BASED ON ELEVATOR MANUFACTURER REQUIREMENTS.

2. CONTRACTOR SHALL VERIFY ELEVATOR PIT DEPTH AND SUMP REQUIREMENTS PRIOR TO PLACING CONCRETE AT PIT. SEE DETAIL C4/SB502 FOR SUMP PIT CONSTRUCTION.

EXISTING BUILDING NOTES

1. THE CONTRACTOR SHALL FIELD VERIFY ALL EXISTING CONDITIONS PRIOR TO DETAILING, FABRICATING, ERECTING OR INSTALLING ANY STRUCTURAL ELEMENT. ALL DISCREPANCIES SHALL BE BROUGHT TO THE ATTENTION OF THE DESIGN TEAM IN A TIMELY MANNER SUCH THAT WORK WILL NOT BE DELAYED.

2. THE CONTRACTOR SHALL PROVIDE ADEQUATE SHORING OF EXISTING STRUCTURE DURING CONSTRUCTION & DEMOLITION.

3. FRAMING GEOMETRY SHOWN WILL REQUIRE MANY EXISTING STRUCUTRAL ELEMENTS TO REMAIN INTACT. CONTRACTOR SHALL BE RESPONSIBLE FOR PROVIDING TEMPORARY SHORING AS NEEDED AND SHALL BE RESPONSIBLE FOR THE MEANS AND METHODS OF SHORING IN A SAFE & RELIABLE MANNER.

4. CORE DRILL CORNERS OF NEW OPENING BEFORE SAW CUTTING. DO NOT OVERCUT.

MASONRY WALL NOTES

1. EXISTING NON-BEARING MASONRY WALLS NOT SHOWN FOR CLARITY. SEE ARCH FOR LOCATIONS.

2. REINFORCING OF NEW OPENINGS IN EXISTING NON-BEARING MASONRY WALLS IS REQUIRED - SEE DETAILS B2/SB503 AND B4/SB503 . SEE ARCH AND MECH FOR OPENING LOCATIONS.

3. BRACING OF DISTURBED EXISTING NON-BEARING MASONRY WALLS IS REQUIRED. CONTACT ENGINEER FOR SPECIFIC SITE CONDITIONS ENCOUNTERED. SEE ARCH AND MECH FOR LOCATIONS OF NEW OPENINGS IN EXISTING NON-BEARING MASONRY WALLS / PORTIONS OF WALL REMOVED.

4. ALL ABANDONED PENETRATIONS THROUGH MASONRY WALLS TO BE INFILLED. SEE C2/SB503.

5. PROVIDE ADDITIONAL HORIZONTAL AND VERTICAL REINFORCING AT WALL CORNERS AND WALL ENDS, SEE DETAIL B4/SB611 .

6. ENSURE MASONRY IS GROUT-FILLED PRIOR TO INSTALLATION OF POST-INSTALLED ANCHORAGE, TYP. SEE GSN 6. 6.1 A.

ARCHITECT 1877
ajc architects
703 east 1700 south
salt lake city, utah 84105
ph: 801.466.8818
fx: 801.466.4411
www.ajcarchitects.com
LICENSED CERTIFIED STRUCTURAL ENGINEER NO. 170118 JEFFERY THOMAS MILLER UTAH
5/18/20
CONSULTANT
REAVELEY Engineers
675 East 500 South, Suite 400
Salt Lake City, UT 84102
P 801 486 3883
F 801 485 0911
www.reaveley.com

OWNER INFORMATION

PROJECT DESCRIPTION

UNIVERSITY OF UTAH DUMKE GYMNASTICS BUILDING

1825 E. SOUTH CAMPUS DRIVE
SALT LAKE CITY, UTAH 84112

AHJ STAMP

SHEET NAME:
FLOOR FRAMING PLAN

REVISIONS

MARK	DATE	DESCRIPTION

ISSUE DATA

ISSUE DATE:	10.04.21
ISSUE TYPE:	CD
DRAWN BY:	PD/RH
CHECKED BY:	CT/GO
CLIENT PROJECT#:	1877

SHEET NUMBER:
SF101

10/4/2021 11:13:01 AM C:\Revit Models\2019-313 UU Dumke Gymnastics Remodel_pdelgadoXR9DX.rvt
ALL IDEAS, DESIGNS, ARRANGEMENTS AND PLANS INDICATED OR REPRESENTED BY THIS DRAWING ARE OWNED BY AND THE PROPERTY OF AJC ARCHITECTS PC AND WERE CREATED, EVOLVED, AND DEVELOPED FOR USE ON AND IN CONNECTION WITH THE SPECIFIED PROJECT. NONE OF SUCH IDEAS, DESIGNS, ARRANGEMENTS OR PLANS MAY BE USED BY OR DISCLOSED TO ANY PERSON, FIRM, OR CORPORATION FOR ANY PURPOSE WHATSOEVER WITHOUT WRITTEN CONSENT OF AJC ARCHITECTS PC. WRITTEN DIMENSIONS ON THESE DRAWINGS SHALL HAVE PRECEDENCE OVER SCALE DIMENSIONS. CONTRACTORS SHALL VERIFY AND BE RESPONSIBLE FOR ALL DIMENSIONS AND CONDITIONS ON THE JOB AND THIS OFFICE MUST BE NOTIFIED OF ANY VARIATION FROM THE DIMENSIONS AND CONDITIONS SHOWN BY THESE DRAWINGS. WARNING: REPRODUCTION HEREOF IS A CRIMINAL OFFENSE UNDER 18 U.S.C. 506. UNAUTHORIZED DISCLOSURE MAY CONSTITUTE TRADE SECRET MISAPPROPRIATION IN VIOLATION OF 17 U.S.C. § 1.61. ET. SEQ. AND OTHER LAWS.

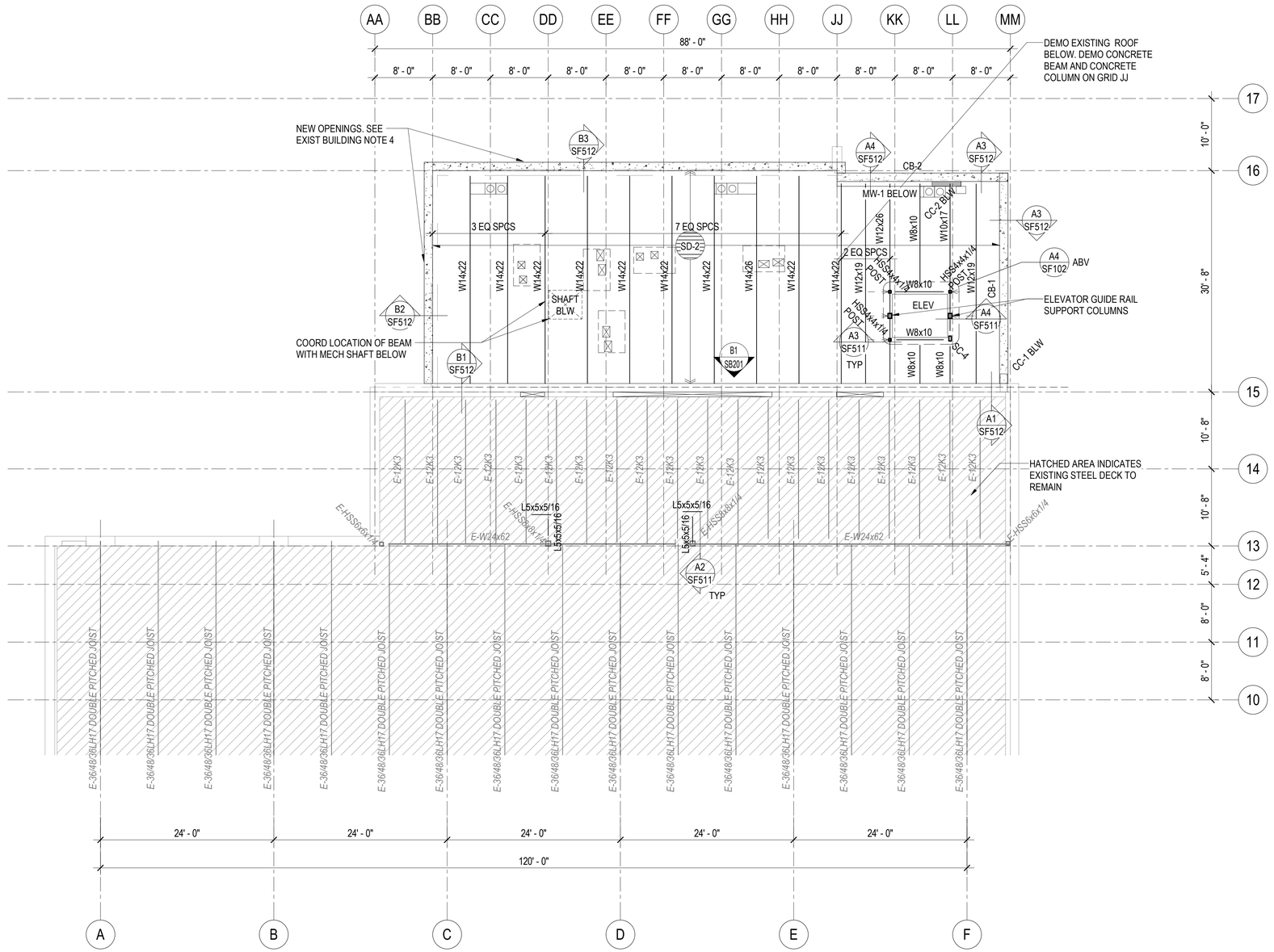

A1 SF102 ROOF FRAMING PLAN

SCALE: 1/8" = 1'-0"

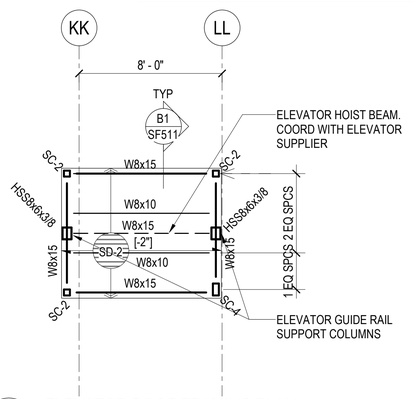

A4 SF102 ELEVATOR ROOF FRAMING PLAN

SCALE: 1/4" = 1'-0"

ROOF FRAMING PLAN NOTES

1. SEE ARCHITECTURAL FOR ROOF SLOPES AND DRAINS. PROVIDE STEEL FRAMES OR REINFORCE OPENINGS PER DETAIL C2/SF511 AT STEEL DECK

EXISTING BUILDING NOTES

1. THE CONTRACTOR SHALL FIELD VERIFY ALL EXISTING CONDITIONS PRIOR TO DETAILING, FABRICATING, ERECTING OR INSTALLING ANY STRUCTURAL ELEMENT. ALL DISCREPANCIES SHALL BE BROUGHT TO THE ATTENTION OF THE DESIGN TEAM IN A TIMELY MANNER SUCH THAT WORK WILL NOT BE DELAYED.

2. THE CONTRACTOR SHALL PROVIDE ADEQUATE SHORING OF EXISTING STRUCTURE DURING CONSTRUCTION & DEMOLITION.

3. FRAMING GEOMETRY SHOWN WILL REQUIRE MANY EXISTING STRUCUTRAL ELEMENTS TO REMAIN INTACT. CONTRACTOR SHALL BE RESPONSIBLE FOR PROVIDING TEMPORARY SHORING AS NEEDED AND SHALL BE RESPONSIBLE FOR THE MEANS AND METHODS OF SHORING IN A SAFE & RELIABLE MANNER.

4. CORE DRILL CORNERS OF NEW OPENING BEFORE SAW CUTTING. DO NOT OVERCUT.

NON-COMPOSITE FRAMING PLAN NOTES

1. SEE STEEL DECK SCHEDULE ON SHEET SF603 FOR DECK PROFILE AND DECK ATTACHMENT REQUIREMENTS.

2. PROVIDE FRAMING AT OPENINGS THROUGH STEEL DECK PER DETAIL C2/SF511. FOR ROUND OPENINGS LESS THAN 12 INCHES IN DIAMETER SEE DETAIL C3/SF511.

3. VERIFY SIZE WEIGHT, LOCATION AND CONFIGURATION OF ALL ROOF TOP EQUIPMENT WITH ARCHITECT AND MECHANICAL ENGINEER. PROVIDE STEEL FRAMES FOR SUPPORT OF ROOF TOP EQUIPMENT PER DETAIL C4/SF511. COORDINATE OPENINGS WITH MECHANICAL & ELECTRICAL.

4. INFILL AREAS OF REMOVED MECHANICAL/ ELECTRICAL EQUIPMENT WITH NEW ROOF DECKING SD-2.

ELEVATOR NOTES

1. CONTRACTOR TO COORDINATE LOCATION OF GUIDERAIL SUPPORT COLUMNS, SEPARATOR BEAMS, MACHINE BEAMS AND HOIST BEAMS. MEMBERS SHOWN ARE SCHEMATIC AND MAY CHANGE BASED ON ELEVATOR MANUFACTURER REQUIREMENTS.

2. CONTRACTOR SHALL VERIFY ELEVATOR PIT DEPTH AND SUMP REQUIREMENTS PRIOR TO PLACING CONCRETE AT PIT. SEE DETAIL C4/SB502 FOR SUMP PIT CONSTRUCTION.

ARCHITECT 1877

ajc architects

703 east 1700 south
salt lake city, utah 84105
ph: 801.466.8818
fx: 801.466.4411
www.ajcarchitects.com

LICENSED CERTIFIED STRUCTURAL ENGINEER
NO. 170418
JEFFERY THOMAS MILLER
UTAH
5/18/20

CONSULTANT

REAVELEY Engineers
675 East 500 South, Suite 400
Salt Lake City, UT 84102
P 801 486 3883
F 801 485 0911
www.reaveley.com

OWNER INFORMATION

PROJECT DESCRIPTION

UNIVERSITY OF UTAH DUMKE GYMNASTICS BUILDING

1825 E. SOUTH CAMPUS DRIVE
SALT LAKE CITY, UTAH 84112

AHJ STAMP

SHEET NAME:

ROOF FRAMING PLAN

REVISIONS

MARK	DATE	DESCRIPTION

ISSUE DATA

ISSUE DATE:	10.04.21
ISSUE TYPE:	CD
DRAWN BY:	PD/RH
CHECKED BY:	CT/GO
CLIENT PROJECT#:	1877

SHEET NUMBER:

SF102

10/4/2021 11:13:02 AM C:\Revit Models\2019-313 UU Dumke Gymnastics Remodel_pdelgadoXR9DX.rvt

ALL IDEAS, DESIGNS, ARRANGEMENTS AND PLANS INDICATED OR REPRESENTED BY THIS DRAWING ARE OWNED BY AND THE PROPERTY OF AJC ARCHITECTS PC AND WERE CREATED, EVOLVED, AND DEVELOPED FOR USE ON AND IN CONNECTION WITH THE SPECIFIED PROJECT. NONE OF THE IDEAS, DESIGNS, ARRANGEMENTS OR PLANS INDICATED OR REPRESENTED BY THIS DRAWING OR OTHER DOCUMENTS MAY BE USED BY OR DISCLOSED TO ANY PERSON, FIRM, OR CORPORATION FOR ANY PURPOSE WHATSOEVER WITHOUT WRITTEN CONSENT OF AJC ARCHITECTS PC. WRITTEN DIMENSIONS ON THESE DRAWINGS SHALL HAVE PRECEDENCE OVER SCALE DIMENSIONS. CONTRACTORS SHALL VERIFY AND BE RESPONSIBLE FOR ALL DIMENSIONS AND CONDITIONS ON THE JOB AND THIS OFFICE MUST BE NOTIFIED OF ANY VARIATION FROM THE DIMENSIONS AND CONDITIONS SHOWN BY THESE DRAWINGS. WARNING: REPRODUCTION HEREOF IS A CRIMINAL OFFENSE UNDER 18 U.S.C. 506. UNAUTHORIZED DISCLOSURE MAY CONSTITUTE TRADE SECRET MISAPPROPRIATION IN VIOLATION OF 17 U.S.C. § 1.61.3 ET. SEQ. AND OTHER LAWS.

10/4/2021 11:13:03 AM C:\Revit Models\2019-313 UU Dumke Gymnastics Remodel_pdelgadoXR9DX.rvt
ALL IDEAS, DESIGNS, ARRANGEMENTS AND PLANS INDICATED OR REPRESENTED BY THIS DRAWING ARE OWNED BY AND THE PROPERTY OF AJC ARCHITECTS PC AND WERE CREATED, EVOLVED, AND DEVELOPED FOR USE ON, AND IN CONNECTION WITH THE SPECIFIED PROJECT. NONE OF THE IDEAS, DESIGNS, ARRANGEMENTS OR PLANS INDICATED IN OR REPRESENTED BY THIS DRAWING, ALL OF WHICH ARE COPYRIGHTED BY AJC ARCHITECTS PC, SHALL BE USED BY OR DISCLOSED TO ANY PERSON, FIRM, OR CORPORATION FOR ANY PURPOSE WHATSOEVER WITHOUT WRITTEN CONSENT OF AJC ARCHITECTS PC. WRITTEN DIMENSIONS ON THESE DRAWINGS SHALL HAVE PRECEDENCE OVER SCALE DIMENSIONS. CONTRACTORS SHALL VERIFY AND BE RESPONSIBLE FOR ALL DIMENSIONS AND CONDITIONS ON THE JOB AND THIS OFFICE MUST BE NOTIFIED OF ANY VARIATION FROM THE DIMENSIONS AND CONDITIONS SHOWN BY THESE DRAWINGS. WARNING - REPRODUCTION HEREOF IS A CRIMINAL OFFENSE UNDER 18 U.S.C. SEC. 506. UNAUTHORIZED DISCLOSURE MAY CONSTITUTE TRADE SECRET MISAPPROPRIATION IN VIOLATION OF 17 U.S.C. § 1.01 ET. SEQ. AND OTHER LAWS.

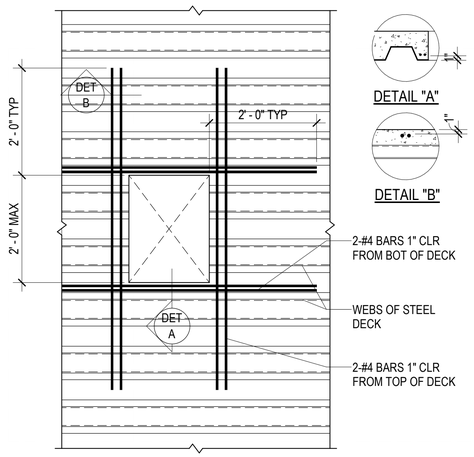

FORMED OPENING

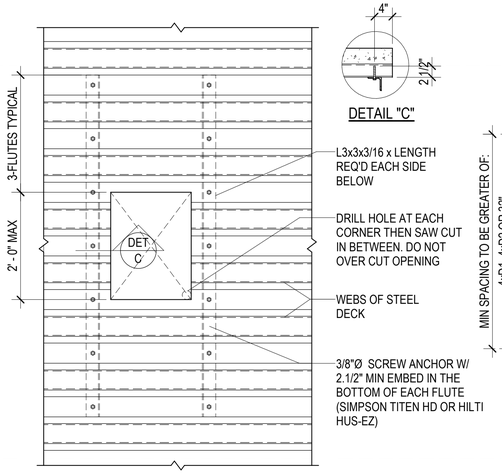

SAW-CUT OPENING

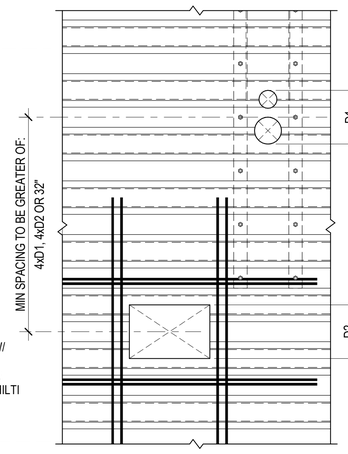

GROUPED OPENINGS

NOTES:

1. UNREINFORCED OPENINGS
A. OPENINGS UP TO 6"Ø DO NOT REQUIRE REINFORCING PROVIDED THEY ARE NOT SPACED LESS THAN 32" O.C.

2. FORMED OPENINGS
A. LEAVE METAL DECK INTACT. PLACE REBAR & FORM OPENING. REMOVE METAL DECK ONCE CONCRETE REACHES 2500psi

3. SAW-CUT OPENINGS
A. SHIM GAPS BETWEEN ANGLE AND BOTTOM FLUTE.
B. INSTALL ANCHORS PER ICC REPORT.

4. GROUPED OPENINGS
A. OPENINGS SPACED CLOSER THAN THE MIN SPACING SHALL BE REINFORCED AS A SINGLE OPENING.
B. THE SIZE OF OPENINGS MEASURED PARALLEL TO THE DECK FLUTES IS NOT LIMITED.

5. OPENINGS LARGER THAN ALLOWED ON THESE DETAILS REQUIRE A FRAME. CONTACT ENGINEER IF FRAME IS NOT PROVIDED ON THE PLAN.

TYP FLR-Misc Openings (W Deck)

C1 / SF501 TYPICAL MISCELLANEOUS FLOOR OPENING (UP TO 24") REINFORCING DETAIL FOR COMPOSITE STEEL DECK

NO SCALE

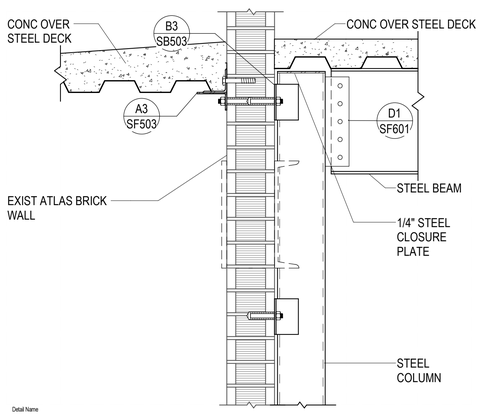

B1 / SF501 NEW STEEL COLUMN AT EXTERIOR WALL

NO SCALE

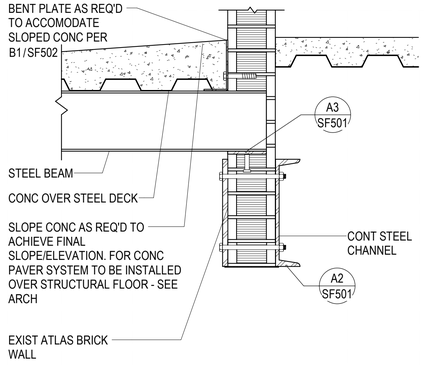

B2 / SF501 NEW OPENING AT EXTERIOR WALL

NO SCALE

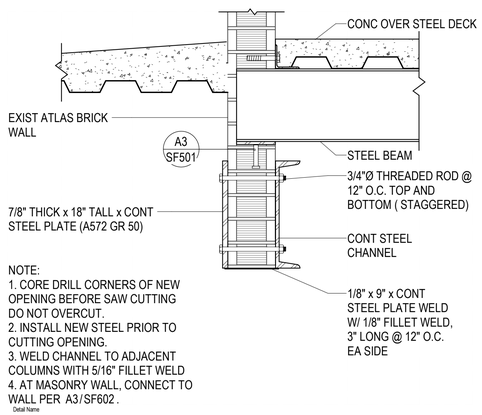

NOTE:
1. CORE DRILL CORNERS OF NEW OPENING BEFORE SAW CUTTING DO NOT OVERCUT.
2. INSTALL NEW STEEL PRIOR TO CUTTING OPENING.
3. WELD CHANNEL TO ADJACENT COLUMNS WITH 5/16" FILLET WELD
4. AT MASONRY WALL, CONNECT TO WALL PER A3 / SF602 .

A2 / SF501 NEW OPENING AT EXTERIOR WALL

NO SCALE

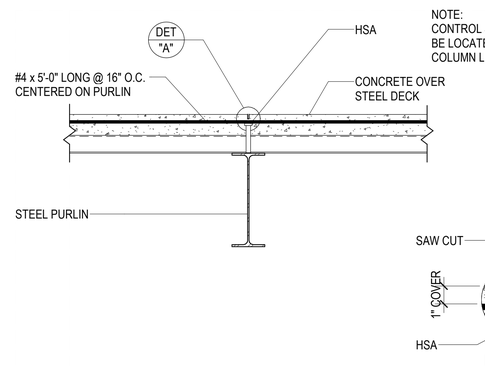

NOTE:
CONTROL JOINTS SHALL BE LOCATED AT INTERIOR COLUMN LINES.

DETAIL AT STEEL PURLIN

TYP FLR-Deck Control Joints

B3 / SF501 TYPICAL COMPOSITE DECK CONTROL JOINTS

NO SCALE

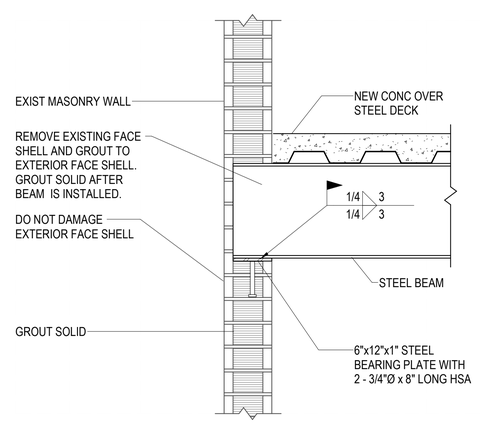

A3 / SF501 NEW STEEL BEAM TO EXISTING MASONRY WALL

NO SCALE

C4 / SF501 TYPICAL COMPOSITE STEEL BEAM AT SLAB RECESS

NO SCALE

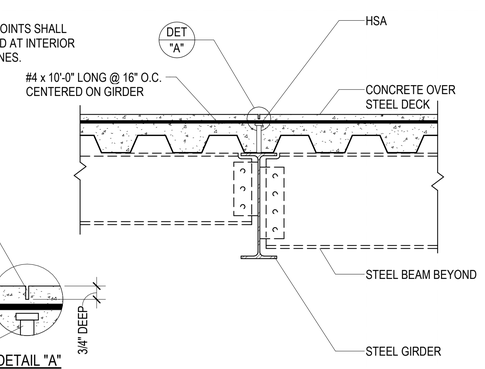

DETAIL AT STEEL GIRDER

TYP FLR-RECESS

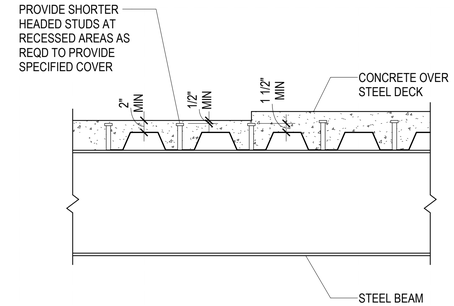

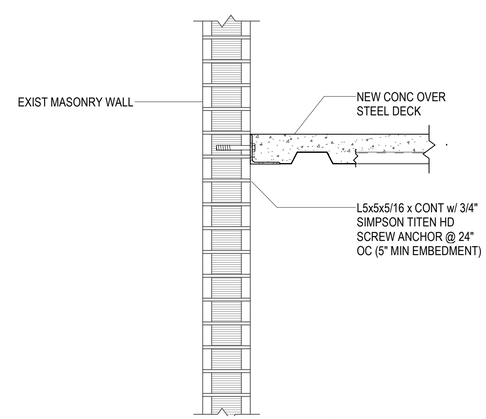

A4 / SF501 NEW FLOOR DECK CONNECTION TO EXISTING MASONRY WALL

NO SCALE

ARCHITECT 1877
ajc architects
703 east 1700 south
salt lake city, utah 84105
ph: 801.466.8818
fx: 801.466.4411
www.ajcarchitects.com
LICENSED ARCHITECT NO. 170418 JEFFERY THOMAS MILLER UTAH
5/18/20

CONSULTANT
REAVELEY Engineers
675 East 500 South, Suite 400
Salt Lake City, UT 84102
P 801 486 3883
F 801 485 0911
www.reaveley.com

OWNER INFORMATION

PROJECT DESCRIPTION

UNIVERSITY OF UTAH DUMKE GYMNASTICS BUILDING

1825 E. SOUTH CAMPUS DRIVE
SALT LAKE CITY, UTAH 84112

AHJ STAMP

SHEET NAME:
TYPICAL FLOOR FRAMING DETAIL

REVISIONS

MARK	DATE	DESCRIPTION

ISSUE DATA

ISSUE DATE:	10.04.21
ISSUE TYPE:	CD
DRAWN BY:	PD/RH
CHECKED BY:	CT/GO
CLIENT PROJECT#:	1877

SHEET NUMBER:
SF501

10/4/2021 11:13:04 AM C:\Revit Models\2019-313 UU Dumke Gymnastics Remodel_pdelgadoXR9DX.rvt
ALL IDEAS, DESIGNS, ARRANGEMENTS AND PLANS INDICATED OR REPRESENTED BY THIS DRAWING ARE OWNED BY AND THE PROPERTY OF AJC ARCHITECTS PC AND WERE CREATED, EVOLVED, AND DEVELOPED FOR USE ON AND IN CONNECTION WITH THE SPECIFIED PROJECT. NONE OF THE IDEAS, DESIGNS, ARRANGEMENTS OR PLANS INDICATED IN OR REPRESENTED BY THIS DRAWING SHALL BE USED BY OR DISCLOSED TO ANY PERSON, FIRM, OR CORPORATION FOR ANY PURPOSE WHATSOEVER WITHOUT WRITTEN CONSENT OF AJC ARCHITECTS PC. WRITTEN DIMENSIONS ON THESE DRAWINGS SHALL HAVE PRECEDENCE OVER SCALE DIMENSIONS. CONTRACTORS SHALL VERIFY AND BE RESPONSIBLE FOR ALL DIMENSIONS AND CONDITIONS ON THE JOB AND THIS OFFICE MUST BE NOTIFIED OF ANY VARIATION FROM THE DIMENSIONS AND CONDITIONS SHOWN BY THESE DRAWINGS. WARNING - REPRODUCTION HEREOF IS A CRIMINAL OFFENSE UNDER 18 U.S.C. SEC. 506. UNAUTHORIZED DISCLOSURE MAY CONSTITUTE TRADE SECRET MISAPPROPRIATION IN VIOLATION OF 17 U.S.C. § 1 ET. SEQ. AND OTHER LAWS.

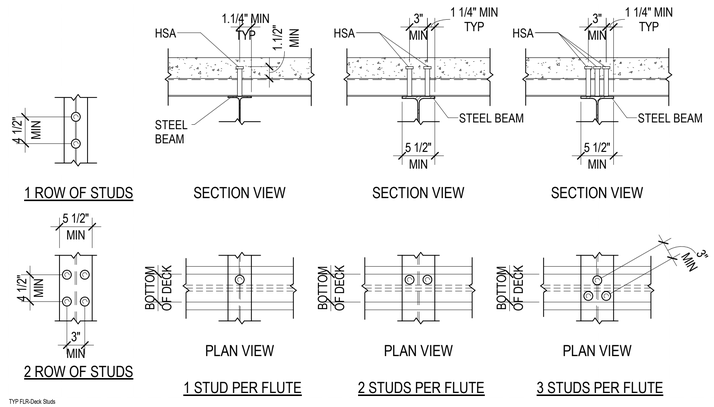

C1 SF502 TYPICAL STUD PLACEMENT DIAGRAMS

NO SCALE

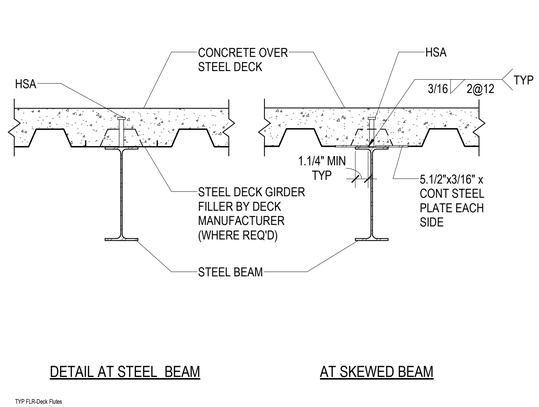

C2 SF502 TYPICAL COMPOSITE DECK BEARING DETAIL AT STEEL BEAM (DECK GIRDER FILLER)

NO SCALE

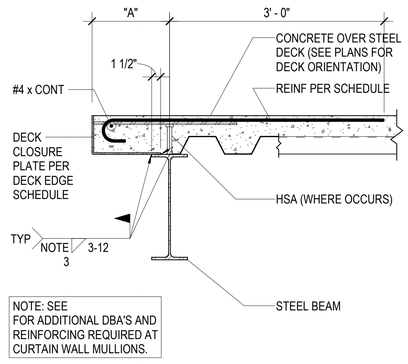

TYPICAL SLAB EDGE DETAIL

DECK EDGE SCHEDULE			
"A"	DECK CLOSURE PLATE		REINFORCING
	THICKNESS	ANCHORS	
0" TO 6"	3/16"	1/2" Ø x 18" LONG DBA @ 24" O.C.	NONE
UP TO 12"	3/16"	1/2" Ø x 24" LONG DBA @ 24" O.C.	#4 @ 12" O.C.
UP TO 15"	1/4"	1/2" Ø x 24" LONG DBA @ 24" O.C.	#4 @ 12" O.C.
UP TO 18"	5/16"	1/2" Ø x 24" LONG DBA @ 24" O.C.	#4 @ 10" O.C.
UP TO 20"	3/8"	1/2" Ø x 24" LONG DBA @ 24" O.C.	#4 @ 8" O.C.
OVER 20"	USE BRACED SLAB EDGE DETAILS		

NOTES:
1. CONTRACTOR SHALL VERIFY ALL DECK EDGE DIMENSIONS WITH ARCH. DRAWINGS PRIOR TO DETAILING AND FABRICATION OF CLOSURE PLATES.
2. COORDINATE CLOSURE PLATES WITH EMBED BLOCKOUTS OR INSERTS THAT ARE REQ'D TO SUPPORT CLADDING, ELEVATOR RAILS & SILLS ETC.
3. CLOSURE PLATE WELD THICKNESS SHALL BE THE PLATE THICKNESS MINUS 1/16" (3/16" MIN)

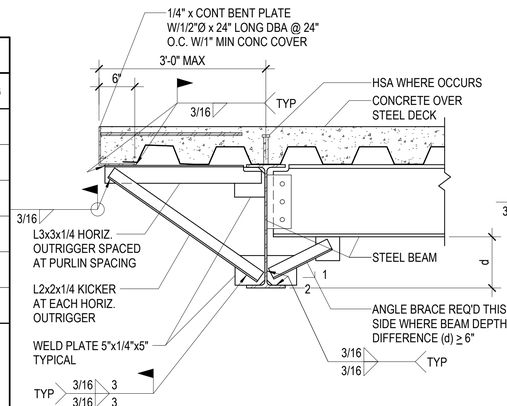

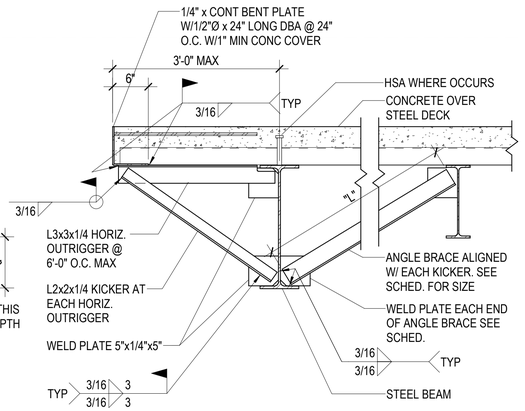

ANGLE BRACE SCHEDULE		
BRACE LENGTH "L"	ANGLE BRACE SIZE	WELD PLATE SIZE
UP TO 4'-0"	L2x2x1/4	4"x1/4"x4"
4'-0" TO 8'-0"	L3x3x1/4	4"x1/4"x4"
8'-0" TO 12'-0"	2-L2.1/2x2.1/2x1/4	4"x3/8"x4"
OVER 12'-0"	2-L3x3x1/4	5"x3/8"x5"

NOTE:
1. WHERE DOUBLE ANGLES ARE USED PROVIDE 3"x3/8" SPACER PLATES AT THIRD POINTS.

B1 SF502 TYPICAL CONCRETE OVER STEEL DECK SLAB EDGE DETAILS AT STEEL BEAMS

NO SCALE

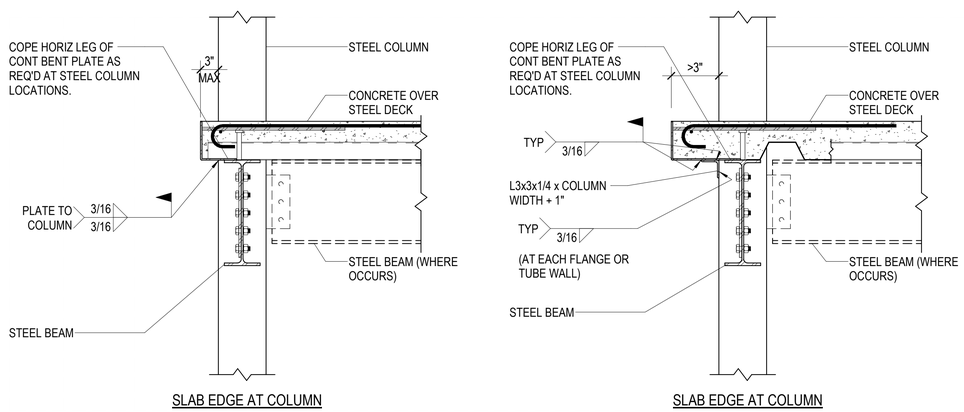

A1 SF502 TYPICAL CONCRETE OVER STEEL DECK SLAB EDGE DETAILS AT STEEL COLUMNS

NO SCALE

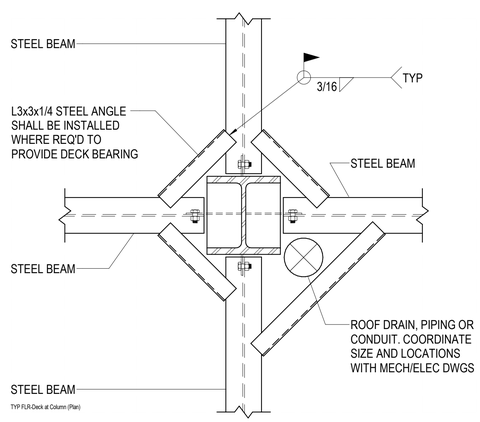

A4 SF502 TYPICAL DECK BEARING AT STEEL COLUMN (PLAN VIEW)

NO SCALE

ARCHITECT 1877
ajc architects
703 east 1700 south
salt lake city, utah 84105
ph: 801.466.8818
fx: 801.466.4411
www.ajcarchitects.com
LICENSED CERTIFIED STRUCTURAL ENGINEER NO. 170418 JEFFERY THOMAS MILLER UTAH
5/18/20
CONSULTANT
REAVELEY Engineers
675 East 500 South, Suite 400
Salt Lake City, UT 84102
P 801 486 3883
F 801 485 0911
www.reaveley.com

OWNER INFORMATION

PROJECT DESCRIPTION

UNIVERSITY OF UTAH DUMKE GYMNASTICS BUILDING

1825 E. SOUTH CAMPUS DRIVE
SALT LAKE CITY, UTAH 84112

AHJ STAMP

SHEET NAME:
TYPICAL FLOOR FRAMING DETAIL

REVISIONS

MARK	DATE	DESCRIPTION

ISSUE DATA

ISSUE DATE:	10.04.21
ISSUE TYPE:	CD
DRAWN BY:	PD/RH
CHECKED BY:	CT/GO
CLIENT PROJECT#:	1877

SHEET NUMBER:
SF502

10/4/2021 11:13:05 AM C:\Revit Models\2019-313 UU Dumke Gymnastics Remodel_pdelgadoXR9DX.rvt

ALL IDEAS, DESIGNS, ARRANGEMENTS AND PLANS INDICATED OR REPRESENTED BY THIS DRAWING ARE OWNED BY AND THE PROPERTY OF AJC ARCHITECTS PC AND WERE CREATED, EVOLVED, AND DEVELOPED FOR USE ON AND IN CONNECTION WITH THE SPECIFIED PROJECT. NONE OF SUCH IDEAS, DESIGNS, ARRANGEMENTS OR PLANS SHALL BE USED BY OR DISCLOSED TO ANY PERSON, FIRM, OR CORPORATION FOR ANY PURPOSE WHATSOEVER WITHOUT WRITTEN CONSENT OF AJC ARCHITECTS PC. WRITTEN DIMENSIONS ON THESE DRAWINGS SHALL HAVE PRECEDENCE OVER SCALE DIMENSIONS. CONTRACTORS SHALL VERIFY AND BE RESPONSIBLE FOR ALL DIMENSIONS AND CONDITIONS ON THE JOB AND THIS OFFICE MUST BE NOTIFIED OF ANY VARIATIONS FROM THE DIMENSIONS AND CONDITIONS SHOWN BY THESE DRAWINGS. WARNING: REPRODUCTION HEREOF IS A CRIMINAL OFFENSE UNDER 18 U.S.C. SEC. 506. UNAUTHORIZED DISCLOSURE MAY CONSTITUTE TRADE SECRET MISAPPROPRIATION IN VIOLATION OF UC 24.2.3(1.1.ET. SEQ. AND OTHER LAWS.

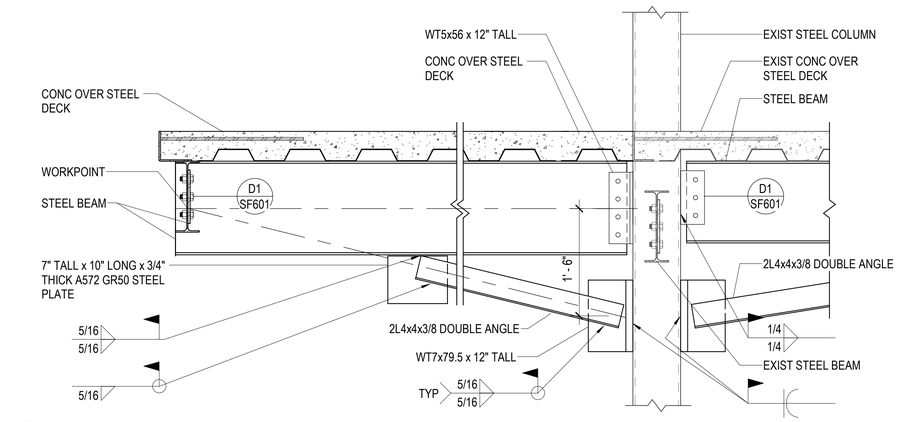

C1 SF503 FLOOR FRAMING DETAIL
NO SCALE

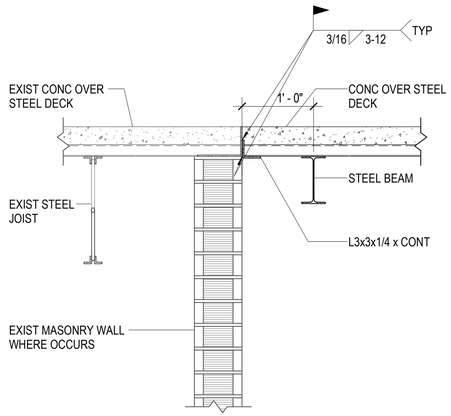

C3 SF503 NEW COMPOSITE FLOOR TO EXIST FLOOR
NO SCALE

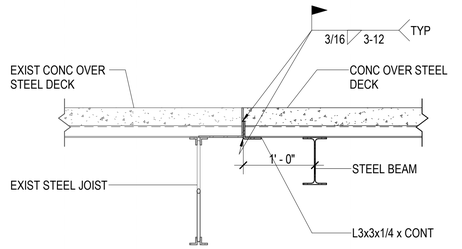

C4 SF503 NEW COMPOSITE FLOOR TO EXIST FLOOR
NO SCALE

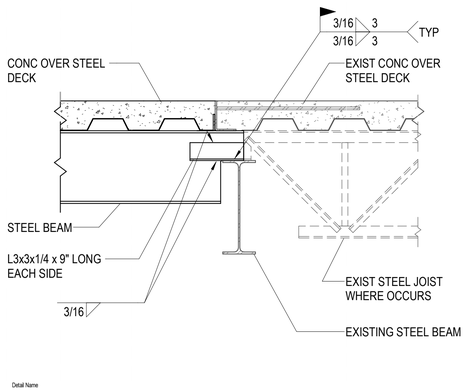

Detail Name

B1 SF503 FLOOR FRAMING DETAIL
NO SCALE

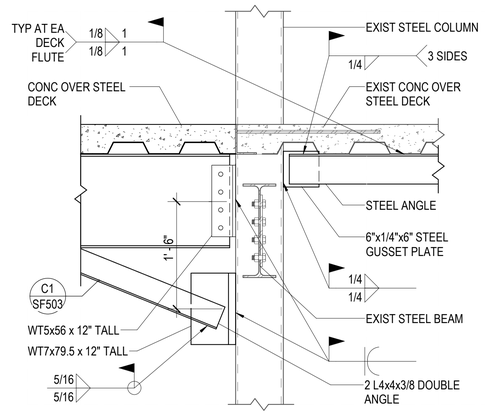

Detail Name

B2 SF503 FLOOR FRAMING DETAIL
NO SCALE

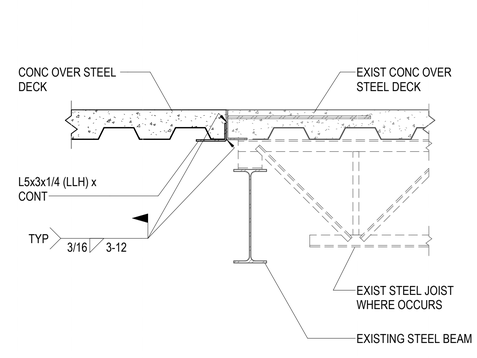

Detail Name

B3 SF503 FLOOR FRAMING DETAIL
NO SCALE

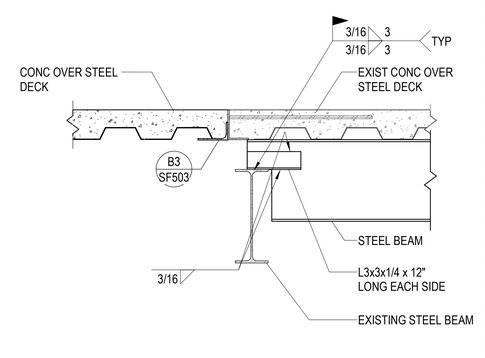

Detail Name

B4 SF503 FLOOR FRAMING DETAIL
NO SCALE

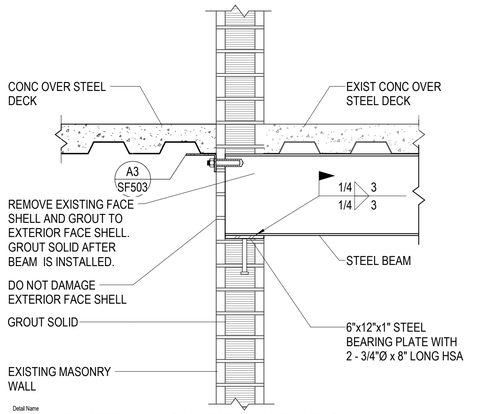

Detail Name

A1 SF503 NEW STEEL BEAM CONNECTION TO EXISTING MASONRY WALL
NO SCALE

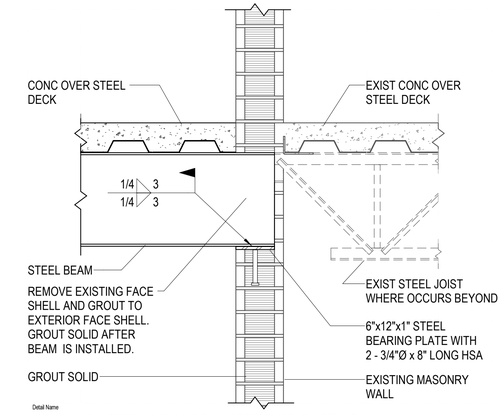

Detail Name

A2 SF503 NEW STEEL BEAM CONNECTION TO EXISTING MASONRY WALL
NO SCALE

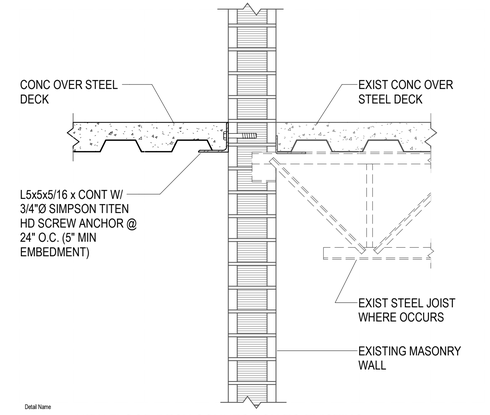

Detail Name

A3 SF503 NEW FLOOR DECK CONNECTION TO EXISTING MASONRY WALL
NO SCALE

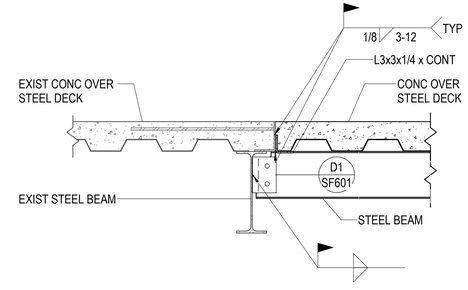

Detail Name

A4 SF503 FLOOR FRAMING DETAIL
NO SCALE

ARCHITECT 1877
ajc architects
703 east 1700 south
salt lake city, utah 84105
ph: 801.466.8818
fx: 801.466.4411
www.ajcarchitects.com
JEFFREY THOMAS MILLER
NO. 170418
UTAH
5/18/20

CONSULTANT
REAVELEY Engineers
675 East 500 South, Suite 400
Salt Lake City, UT 84102
P 801 486 3883
F 801 485 0911
www.reaveley.com

OWNER INFORMATION

PROJECT DESCRIPTION

UNIVERSITY OF UTAH DUMKE GYMNASTICS BUILDING

1825 E. SOUTH CAMPUS DRIVE
SALT LAKE CITY, UTAH 84112

AHJ STAMP

SHEET NAME:
FLOOR FRAMING DETAILS

REVISIONS

MARK	DATE	DESCRIPTION

ISSUE DATA

ISSUE DATE:	10.04.21
ISSUE TYPE:	CD
DRAWN BY:	PD/RH
CHECKED BY:	CT/GO
CLIENT PROJECT#:	1877

SHEET NUMBER:
SF503

10/4/2021 11:13:05 AM C:\Revit Models\2019-313 UU Dumke Gymnastics Remodel_pdelgado\XR9DX.rvt
ALL IDEAS, DESIGNS, ARRANGEMENTS AND PLANS INDICATED OR REPRESENTED BY THIS DRAWING ARE OWNED BY AND THE PROPERTY OF AJC ARCHITECTS PC AND WERE CREATED, EVOLVED AND DEVELOPED FOR USE ON AND IN CONNECTION WITH THE SPECIFIED PROJECT. NONE OF THE IDEAS, DESIGNS, ARRANGEMENTS OR PLANS INDICATED OR REPRESENTED BY THIS DRAWING OR OTHER DOCUMENTS PREPARED BY AJC ARCHITECTS PC, EMA, OR CORPORATION FOR ANY PURPOSE WHATSOEVER MAY BE USED BY ANY PERSON, FIRM, OR CORPORATION FOR ANY PURPOSE WHATSOEVER WITHOUT WRITTEN CONSENT OF AJC ARCHITECTS PC. WRITTEN DIMENSIONS ON THESE DRAWINGS SHALL HAVE PRECEDENCE OVER SCALE DIMENSIONS. CONTRACTORS SHALL VERIFY AND BE RESPONSIBLE FOR ALL DIMENSIONS AND CONDITIONS ON THE JOB AND THIS OFFICE MUST BE NOTIFIED OF ANY VARIATION FROM THE DIMENSIONS AND CONDITIONS SHOWN BY THESE DRAWINGS. WARNING: REPRODUCTION HEREOF IS A CRIMINAL OFFENSE UNDER 18 U.S.C. SEC. 506. UNAUTHORIZED DISCLOSURE MAY CONSTITUTE TRADE SECRET MISAPPROPRIATION IN VIOLATION OF 12-24-2-3 I.C. ET. SEQ. AND OTHER LAWS.

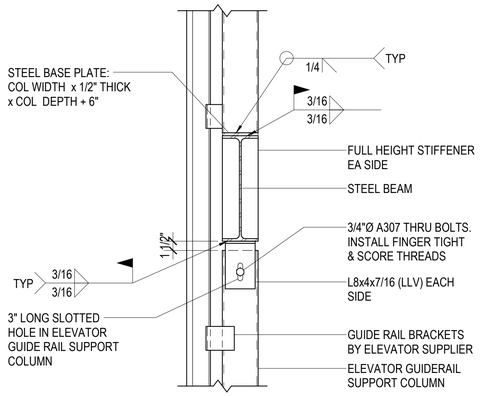

C2 / SF504 ELEVATOR GUIDE RAIL SUPPORT COLUMN CONNECTION
NO SCALE

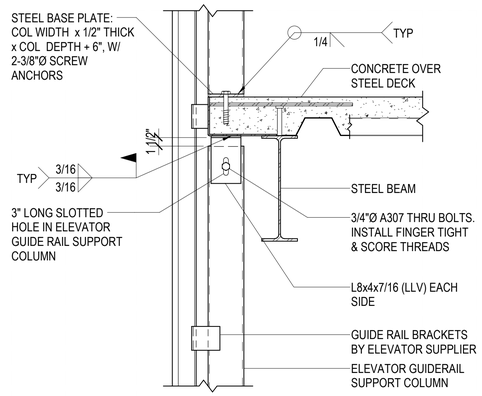

C3 / SF504 ELEVATOR GUIDE RAIL SUPPORT COLUMN CONNECTION
NO SCALE

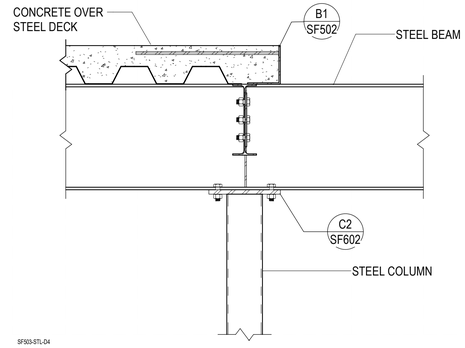

C4 / SF504 STEEL BEAM TO STEEL COLUMN
NO SCALE

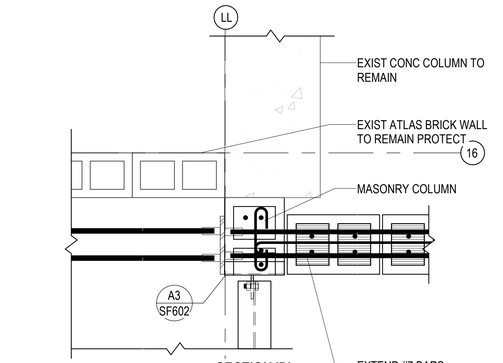

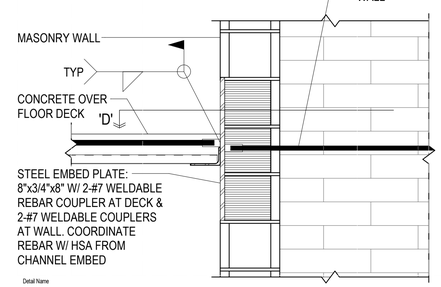

A4 / SF504 COLLECTOR CONNECTION TO MASONRY COLUMN
NO SCALE

ARCHITECT 1877
ajc architects
703 east 1700 south
salt lake city, utah 84105
ph: 801.466.8818
fx: 801.466.4411
www.ajcarchitects.com
LICENSED CERTIFIED STRUCTURAL ENGINEER
NO. 170418
JEFFERY THOMAS MILLER
UTAH
5/18/20

CONSULTANT
REAVELEY Engineers
675 East 500 South, Suite 400
Salt Lake City, UT 84102
P 801 486 3883
F 801 485 0911
www.reaveley.com

OWNER INFORMATION

PROJECT DESCRIPTION
UNIVERSITY OF UTAH DUMKE GYMNASTICS BUILDING
1825 E. SOUTH CAMPUS DRIVE
SALT LAKE CITY, UTAH 84112

AHJ STAMP

SHEET NAME:
FLOOR FRAMING DETAILS

REVISIONS
MARK DATE DESCRIPTION

ISSUE DATA
ISSUE DATE: 10.04.21
ISSUE TYPE: CD
DRAWN BY: PD/RH
CHECKED BY: CT/GO
CLIENT PROJECT#:1877

SHEET NUMBER:
SF504

ALL IDEAS, DESIGNS, ARRANGEMENTS AND PLANS INDICATED OR REPRESENTED BY THIS DRAWING ARE OWNED BY, AND THE PROPERTY OF AJC ARCHITECTS PC AND WERE CREATED, EVOLVED, AND DEVELOPED FOR USE ON AND IN CONNECTION WITH THE SPECIFIED PROJECT. NONE OF SUCH IDEAS, DESIGNS, ARRANGEMENTS OR PLANS SHALL BE USED BY OR DISCLOSED TO ANY PERSON, FIRM, OR CORPORATION FOR ANY PURPOSE WHATSOEVER WITHOUT WRITTEN CONSENT OF AJC ARCHITECTS PC. WRITTEN DIMENSIONS ON THESE DRAWINGS SHALL HAVE PRECEDENCE OVER SCALE DIMENSIONS. CONTRACTORS SHALL VERIFY AND BE RESPONSIBLE FOR ALL DIMENSIONS AND CONDITIONS ON THE JOB AND THIS OFFICE MUST BE NOTIFIED OF ANY VARIATION FROM THE DIMENSIONS AND CONDITIONS SHOWN BY THESE DRAWINGS. WARNING: REPRODUCTION HEREOF IS A CRIMINAL OFFENSE UNDER 18 U.S.C. 506. UNAUTHORIZED DISCLOSURE MAY CONSTITUTE TRADE SECRET MISAPPROPRIATION IN VIOLATION OF 13-24-2 (1) ET. SEQ. AND OTHER LAWS.

10/4/2021 11:13:06 AM C:\Revit Models\2019-313 UU Dumke Gymnastics Remodel_pdelgadoXR9DX.rvt

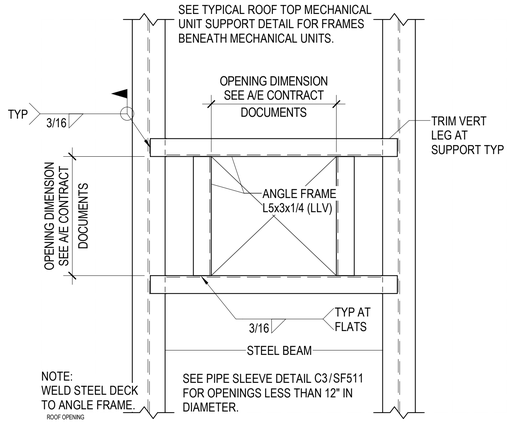

C2 / SF511 TYPICAL ROOF OPENING DETAIL (PLAN VIEW)
NO SCALE

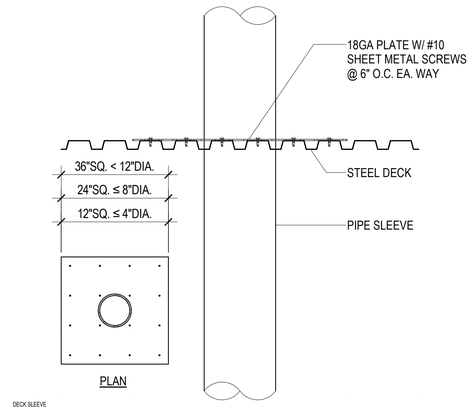

C3 / SF511 TYPICAL PIPE SLEEVE HOLE THRU ROOF DECK
NO SCALE

WHERE THE MECHANICAL UNIT WEIGHS LESS THAN 600#, THE L6x4x5/16 SUPPORT ANGLES MAY CHANGED TO L5x3x1/4 (LLV).
SOLID BLOCK THE FLUTES OF THE STEEL DECK BENEATH THE CURB OF THE MECHANICAL UNIT. THIS MAY BE DONE WITH A HSS1.1/2x1.1/2x1/4 x6" LONG TACK WELDED TO THE STEEL DECK OR WITH SOLID BLOCKING CONNECTED TO THE STEEL DECK.

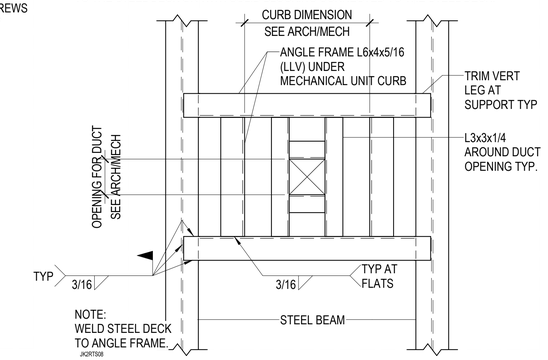

C4 / SF511 TYP ROOF TOP MECHANICAL UNIT SUPPORT DETAIL (PLAN VIEW)
NO SCALE

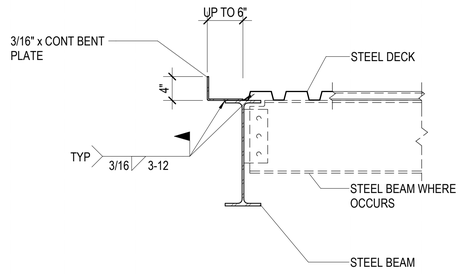

B1 / SF511 TYPICAL ROOF EDGE DETAILS AT STEEL BEAMS
NO SCALE

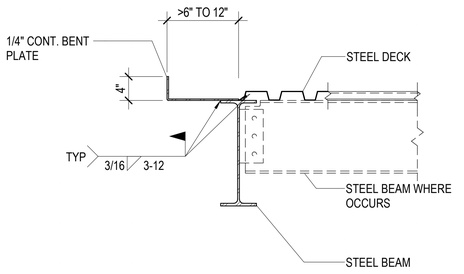

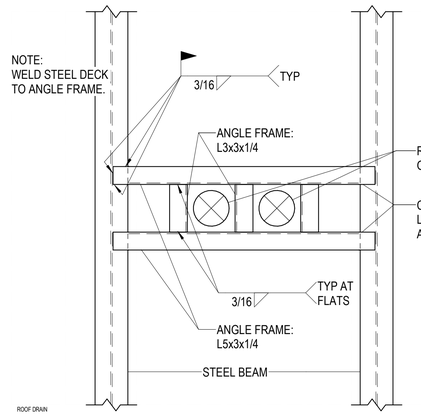

B3 / SF511 TYPICAL ROOF DRAIN OPENING (PLAN VIEW)
NO SCALE

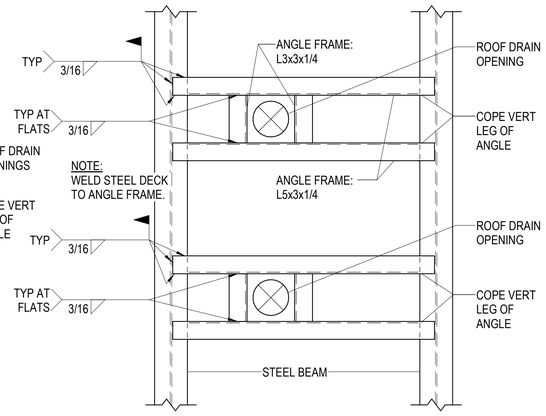

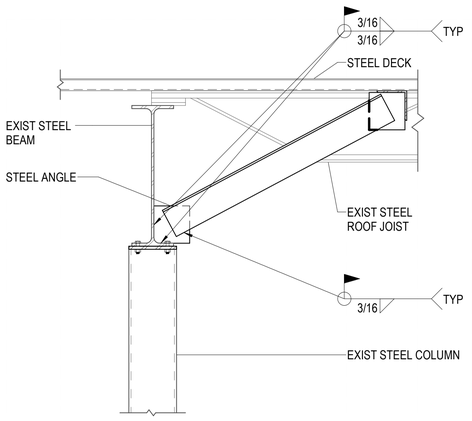

A2 / SF511 BEAM TO COLUMN CONNECTION
NO SCALE

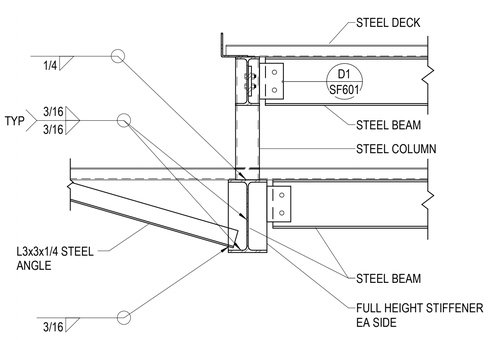

A3 / SF511 BEAM TO COLUMN CONNECTION
NO SCALE

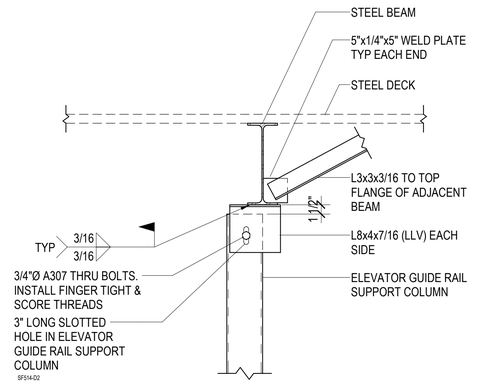

A4 / SF511 ELEVATOR GUIDE RAIL SUPPORT COLUMN BRACING AT TOP
NO SCALE

ARCHITECT 1877
ajc architects
703 east 1700 south
salt lake city, utah 84105
ph: 801.466.8818
fx: 801.466.4411
www.ajcarchitects.com
LICENSED CERTIFIED STRUCTURAL ENGINEER
NO. 170118
JEFFERY THOMAS MILLER
UTAH
5/18/20

CONSULTANT

REAVELEY Engineers
675 East 500 South, Suite 400
Salt Lake City, UT 84102
P 801 486 3883
F 801 485 0911
www.reaveley.com

OWNER INFORMATION

PROJECT DESCRIPTION

UNIVERSITY OF UTAH DUMKE GYMNASTICS BUILDING

1825 E. SOUTH CAMPUS DRIVE
SALT LAKE CITY, UTAH 84112

AHJ STAMP

SHEET NAME:
TYPICAL ROOF FRAMING DETAILS

REVISIONS

MARK	DATE	DESCRIPTION

ISSUE DATA

ISSUE DATE:	10.04.21
ISSUE TYPE:	CD
DRAWN BY:	PD/RH
CHECKED BY:	CT/GO
CLIENT PROJECT#:	1877

SHEET NUMBER:
SF511

ALL IDEAS, DESIGNS, ARRANGEMENTS AND PLANS INDICATED OR REPRESENTED BY THIS DRAWING ARE OWNED BY AND THE PROPERTY OF AJC ARCHITECTS PC AND WERE CREATED, EVOLVED, AND DEVELOPED FOR USE ON, AND IN CONNECTION WITH THE SPECIFIED PROJECT. NONE OF THE IDEAS, DESIGNS, ARRANGEMENTS OR PLANS SHALL BE USED BY OR DISCLOSED TO ANY PERSON, FIRM, OR CORPORATION FOR ANY PURPOSE WHATSOEVER WITHOUT WRITTEN CONSENT OF AJC ARCHITECTS PC. WRITTEN DIMENSIONS ON THESE DRAWINGS SHALL HAVE PRECEDENCE OVER SCALE DIMENSIONS. CONTRACTORS SHALL VERIFY AND BE RESPONSIBLE FOR ALL DIMENSIONS AND CONDITIONS ON THE JOB AND THIS OFFICE MUST BE NOTIFIED OF ANY VARIATION FROM THE DIMENSIONS AND CONDITIONS SHOWN BY THESE DRAWINGS. WARNING - REPRODUCTION HEREOF IS A CRIMINAL OFFENSE UNDER 18 U.S.C. SEC. 506. UNAUTHORIZED DISCLOSURE MAY CONSTITUTE TRADE SECRET MISAPPROPRIATION IN VIOLATION OF 13-24-2 (1) (-1) ET. SEQ. AND OTHER LAWS.

10/4/2021 11:13:07 AM C:\Revit Models\2019-313 UU Dumke Gymnastics Remodel_pdelgado\XR9DX.rvt

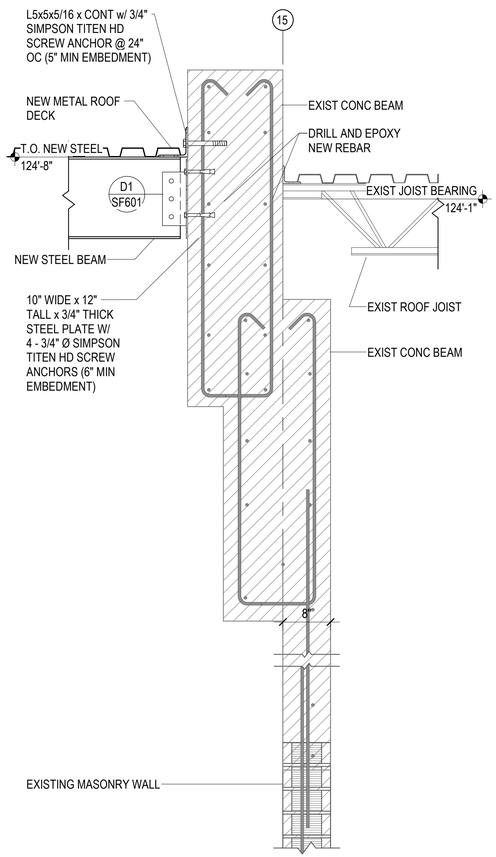

B1 SF512 STEEL BEAM CONNECTION AT EXISTING CONC WALL
NO SCALE

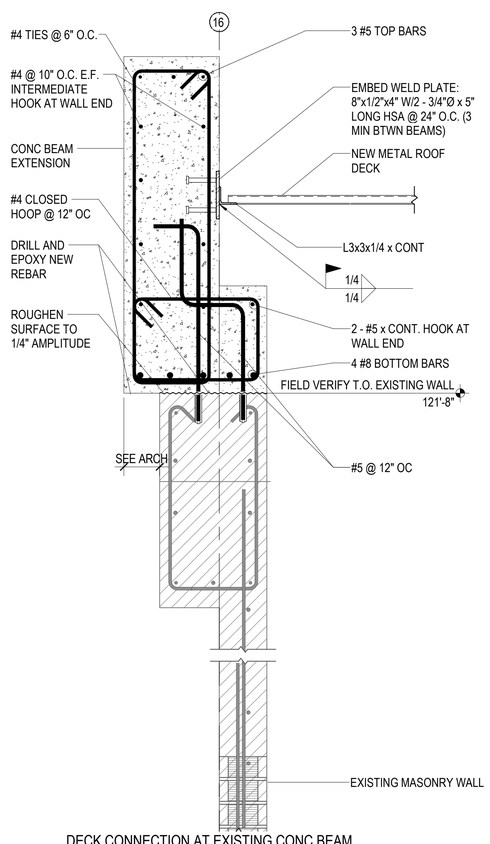

B2 SF512 DECK CONNECTION AT EXISTING CONC BEAM EXTENSION
NO SCALE

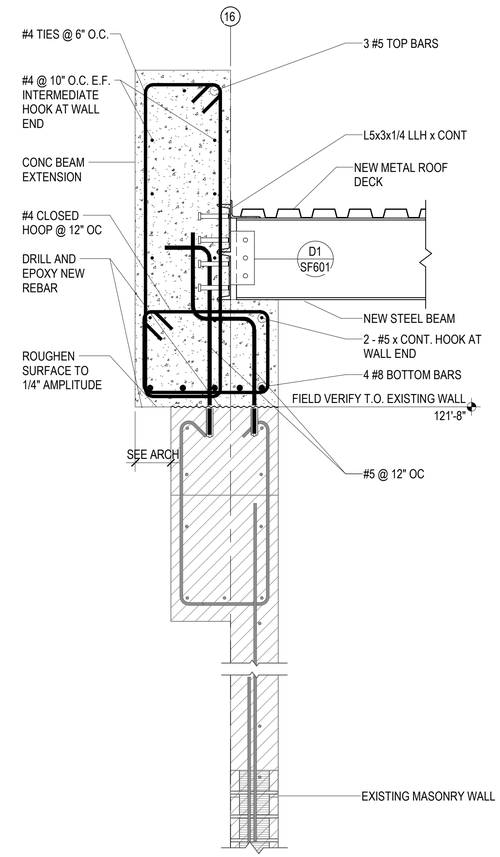

B3 SF512 STEEL BEAM CONNECTION AT CONC BEAM EXTENSION
NO SCALE

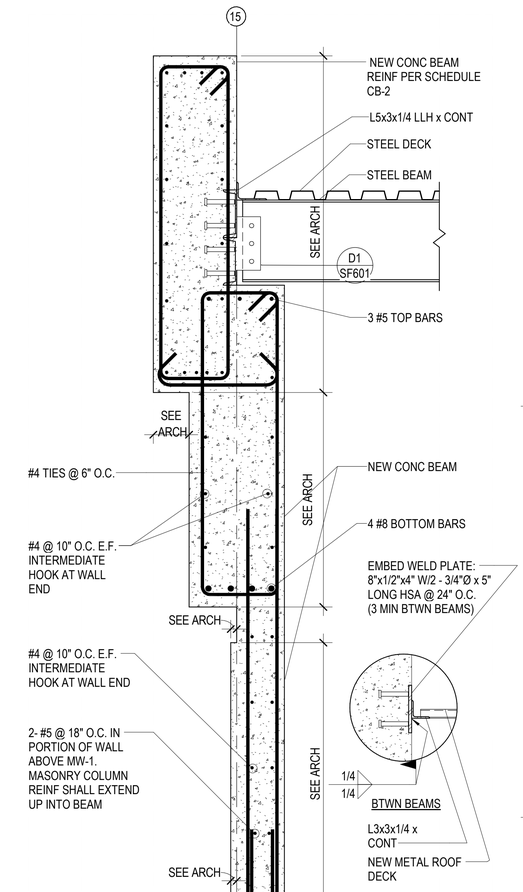

A4 SF512 SECTION THROUGH CONCRETE BEAM AND MASONRY WALL/COLUMN
NO SCALE

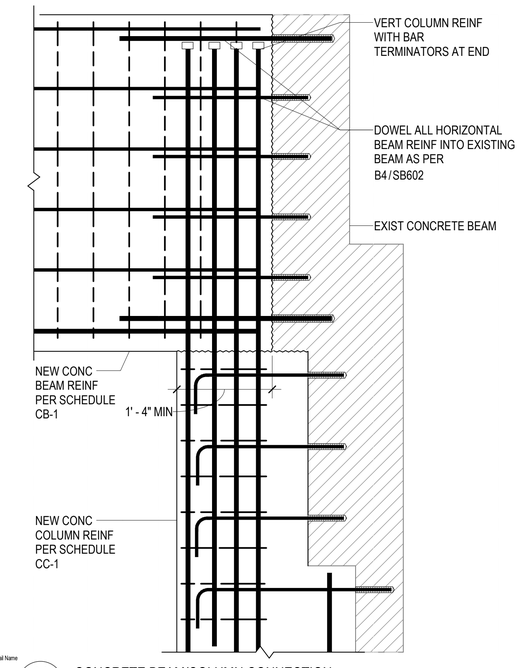

Detail Name
A1 SF512 CONCRETE BEAM/COLUMN CONNECTION
NO SCALE

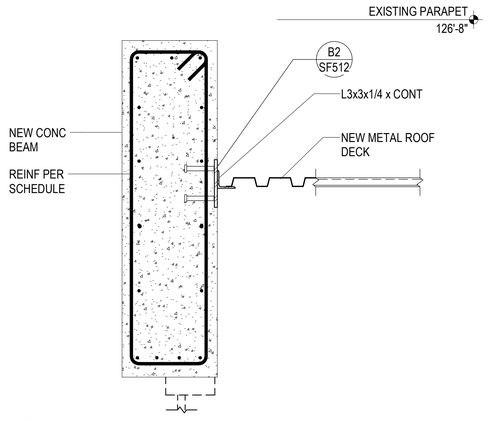

A3 SF512 DECK CONNECTION AT CONC BEAM
NO SCALE

ARCHITECT 1877
ajc architects
703 east 1700 south
salt lake city, utah 84105
ph: 801.466.8818
fx: 801.466.4411
www.ajcarchitects.com
LICENSED CERTIFIED STRUCTURAL ENGINEER NO. 170118 JEFFERY THOMAS MILLER UTAH
5/18/20
CONSULTANT
REAVELEY Engineers
675 East 500 South, Suite 400
Salt Lake City, UT 84102
P 801 486 3883
F 801 485 0911
www.reaveley.com

OWNER INFORMATION

PROJECT DESCRIPTION

UNIVERSITY OF UTAH DUMKE GYMNASTICS BUILDING

1825 E. SOUTH CAMPUS DRIVE
SALT LAKE CITY, UTAH 84112

AHJ STAMP

SHEET NAME:
TYPICAL ROOF FRAMING DETAILS

REVISIONS

MARK	DATE	DESCRIPTION

ISSUE DATA

ISSUE DATE:	10.04.21
ISSUE TYPE:	CD
DRAWN BY:	PD/RH
CHECKED BY:	CT/GO
CLIENT PROJECT#:	1877

SHEET NUMBER:
SF512

10/4/2021 11:13:08 AM C:\Revit Models\2019-313 UU Dumke Gymnastics Remodel_pdelgadoXR9DX.rvt
ALL IDEAS, DESIGNS, ARRANGEMENTS AND PLANS INDICATED OR REPRESENTED BY THIS DRAWING ARE OWNED BY, AND THE PROPERTY OF, AJC ARCHITECTS, PC AND WERE CREATED, EVOLVED, AND DEVELOPED FOR USE ON AND IN CONNECTION WITH THE SPECIFIED PROJECT. NONE OF SUCH IDEAS, DESIGNS, ARRANGEMENTS OR PLANS SHALL BE USED BY (OR DISCLOSED TO) ANY PERSON, FIRM, OR CORPORATION FOR ANY PURPOSE WHATSOEVER WITHOUT WRITTEN CONSENT OF AJC ARCHITECTS PC. WRITTEN DIMENSIONS ON THESE DRAWINGS SHALL HAVE PRECEDENCE OVER SCALE DIMENSIONS. CONTRACTORS SHALL VERIFY AND BE RESPONSIBLE FOR ALL DIMENSIONS AND CONDITIONS ON THE JOB AND THIS OFFICE MUST BE NOTIFIED OF ANY VARIATION FROM THE DIMENSIONS AND CONDITIONS SHOWN BY THESE DRAWINGS. WARNING: REPRODUCTION HEREOF IS A CRIMINAL OFFENSE UNDER 18 U.S.C. 506. UNAUTHORIZED DISCLOSURE MAY CONSTITUTE TRADE SECRET MISAPPROPRIATION IN VIOLATION OF 12.24.2 (1) 1 ET. SEQ. AND OTHER LAWS.

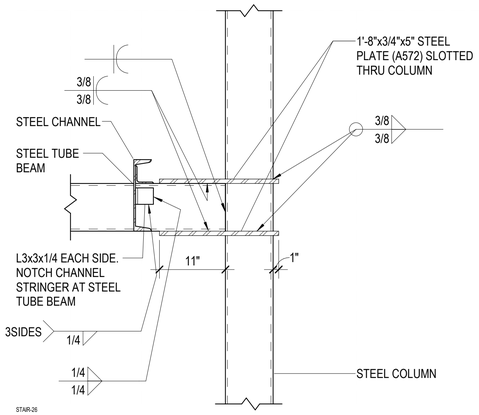

C1 SF521 TYPICAL STAIR DETAIL
NO SCALE

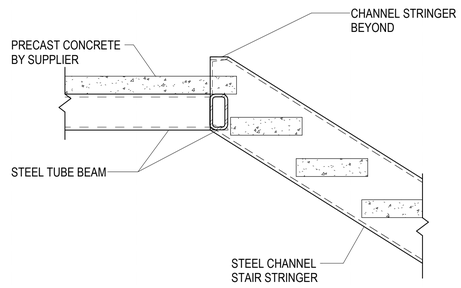

C2 SF521 STAIR STRINGER CONNECTION AT LANDING
NO SCALE

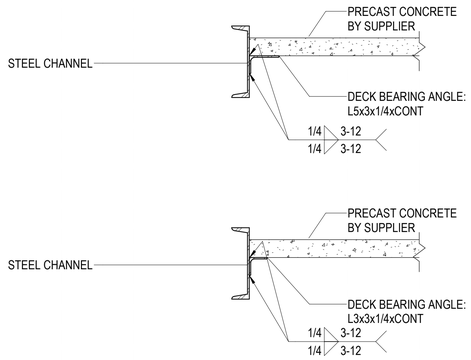

C3 SF521 PRECAST CONCRETE BEARING AT STEEL CHANNEL
NO SCALE

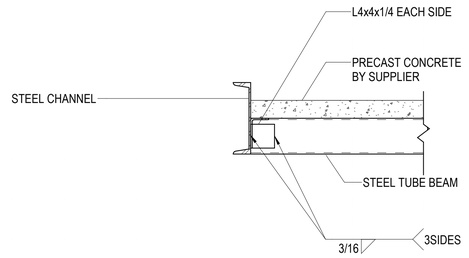

C4 SF521 TYPICAL STAIR DETAIL
NO SCALE

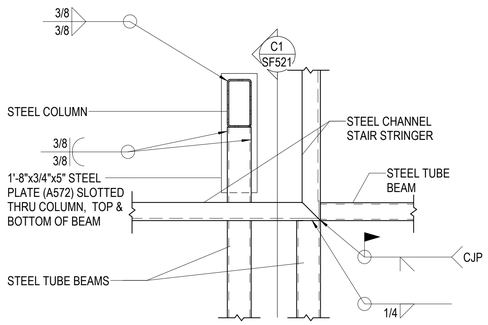

B3 SF521 STAIR DETAIL
NO SCALE

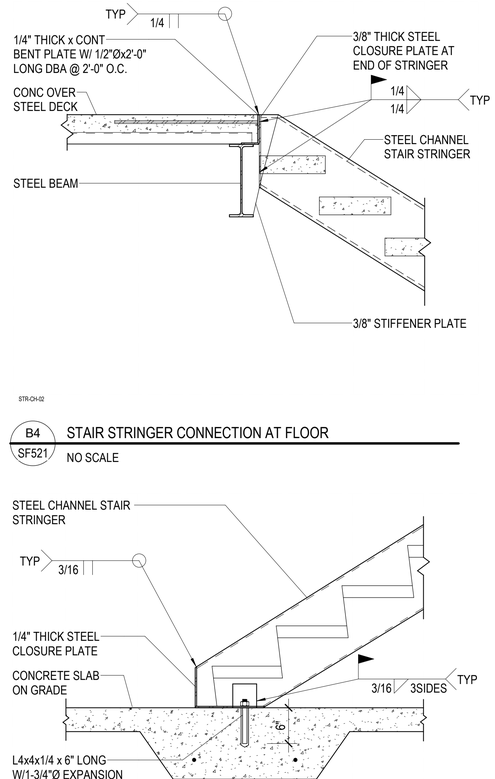

B4 SF521 STAIR STRINGER CONNECTION AT FLOOR
NO SCALE

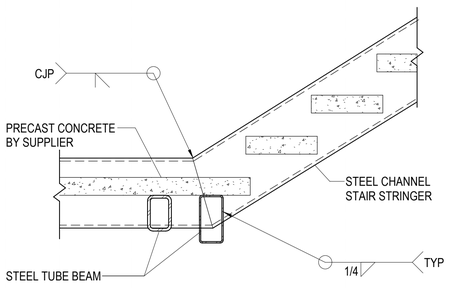

A3 SF521 STAIR STRINGER CONNECTION AT LANDING
NO SCALE

A4 SF521 TYPICAL STAIR DETAIL
NO SCALE

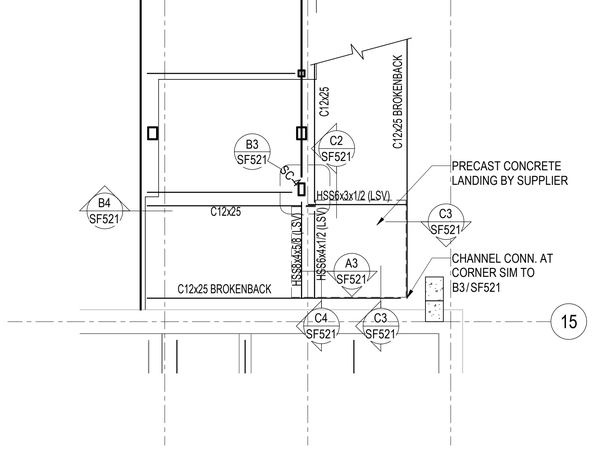

A1 SF521 STAIR FRAMING PLAN
SCALE: 1/4" = 1'-0"

ARCHITECT 1877
ajc architects
703 east 1700 south
salt lake city, utah 84105
ph: 801.466.8818
fx: 801.466.4411
www.ajcarchitects.com
LICENSED CERTIFIED STRUCTURAL ENGINEER
NO. 170118
JEFFERY THOMAS MILLER
UTAH
5/18/20
CONSULTANT
REAVELEY Engineers
675 East 500 South, Suite 400
Salt Lake City, UT 84102
P 801 486 3883
F 801 485 0911
www.reaveley.com

OWNER INFORMATION

PROJECT DESCRIPTION

UNIVERSITY OF UTAH DUMKE GYMNASTICS BUILDING

1825 E. SOUTH CAMPUS DRIVE
SALT LAKE CITY, UTAH 84112

AHJ STAMP

SHEET NAME:
STAIR FRAMING PLAN AND DETAILS

REVISIONS

MARK	DATE	DESCRIPTION

ISSUE DATA

ISSUE DATE:	10.04.21
ISSUE TYPE:	CD
DRAWN BY:	PD/RH
CHECKED BY:	CT/GO
CLIENT PROJECT#:	1877

SHEET NUMBER:
SF521

ALL IDEAS, DESIGNS, ARRANGEMENTS AND PLANS INDICATED OR REPRESENTED BY THIS DRAWING ARE OWNED BY, AND THE PROPERTY OF, AJC ARCHITECTS PC, AND WERE CREATED, EVOLVED, AND DEVELOPED FOR USE ON AND IN CONNECTION WITH THE SPECIFIED PROJECT. NONE OF THE IDEAS, DESIGNS, ARRANGEMENTS OR PLANS SHALL BE USED BY OR DISCLOSED TO ANY PERSON, FIRM, OR CORPORATION FOR ANY PURPOSE WHATSOEVER WITHOUT WRITTEN CONSENT OF AJC ARCHITECTS PC. WRITTEN DIMENSIONS ON THESE DRAWINGS SHALL HAVE PRECEDENCE OVER SCALE DIMENSIONS. CONTRACTORS SHALL VERIFY AND BE RESPONSIBLE FOR ALL DIMENSIONS AND CONDITIONS ON THE JOB AND THIS OFFICE MUST BE NOTIFIED OF ANY VARIATION FROM THE DIMENSIONS AND CONDITIONS SHOWN BY THESE DRAWINGS. WARNING: REPRODUCTION HEREOF IS A CRIMINAL OFFENSE UNDER 18 U.S.C. SEC. 506. UNAUTHORIZED DISCLOSURE MAY CONSTITUTE TRADE SECRET MISAPPROPRIATION IN VIOLATION OF 17 U.S.C. § 1-01. SEQ. AND OTHER LAWS.

10/4/2021 11:13:09 AM C:\Revit Models\2019-313 UU Dumke Gymnastics Remodel_pdelgadoXR9DX.rvt

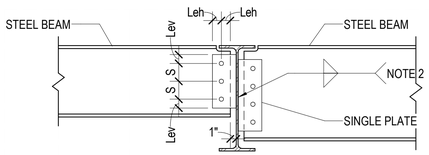

BEAM TO BEAM CONNECTION

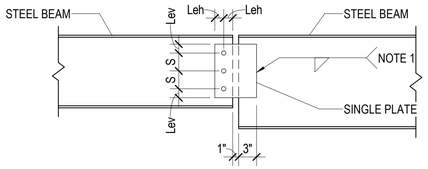

BEAM TO BEAM CONNECTION

Sched Single Shear

D1 / SF601 TYPICAL SINGLE PLATE CONNECTION DETAILS AND SCHEDULE

NO SCALE

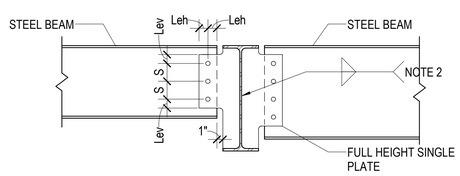

BEAM TO BEAM CONNECTION AT FULL HEIGHT STIFFENER

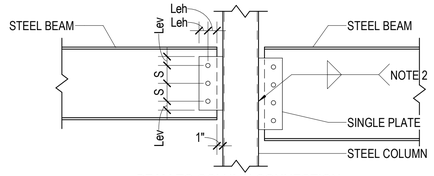

BEAM TO COLUMN CONNECTION

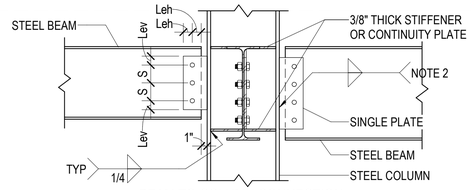

BEAM TO COLUMN CONNECTION

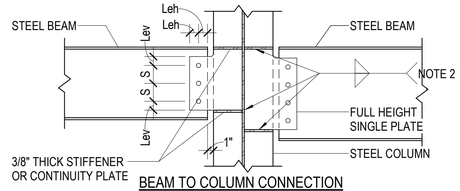

BEAM TO COLUMN CONNECTION

SINGLE PLATE CONNECTION SCHEDULE			
BEAM SIZE	WEB PLATE THICKNESS (t)	A325N BOLTS	
		NUMBER	SIZE
W8 AND W10	3/8"	2	7/8"Ø
W12 AND W14	3/8"	3	7/8"Ø
W16	3/8"	4	7/8"Ø
W18	3/8"	5	7/8"Ø
W21	3/8"	6	7/8"Ø
W24	3/8"	7	7/8"Ø
W27	3/8"	8	7/8"Ø
W30	3/8"	9	7/8"Ø
W33	3/8"	10	7/8"Ø
W36	3/8"	11	7/8"Ø

NOTES:
1. FILLET WELDS ONE SIDE SHALL EQUAL THE PLATE THICKNESS MINUS 1/16" (1/4" MIN.)
2. FILLET WELDS TWO SIDES SHALL BE 5/8 THE PLATE THICKNESS (1/4" MIN.) EACH SIDE
3. BOLT EDGE DISTANCE SHALL BE AS FOLLOWS: Leh = 2 x BOLT DIAMETER; Lev = 1.1/2".
4. BOLT SPACING (S) SHALL BE 3".
5. AT SKEWED JOINTS PROVIDE AN EQUIVALENT LEG SIZE TO NOTE 2 PER AWS D1.1.
6. PROVIDE SHORT SLOTTED HOLES WHEN 6 OR MORE BOLTS ARE REQUIRED AND BOLT DIAMETER IS ≤ 3/4".

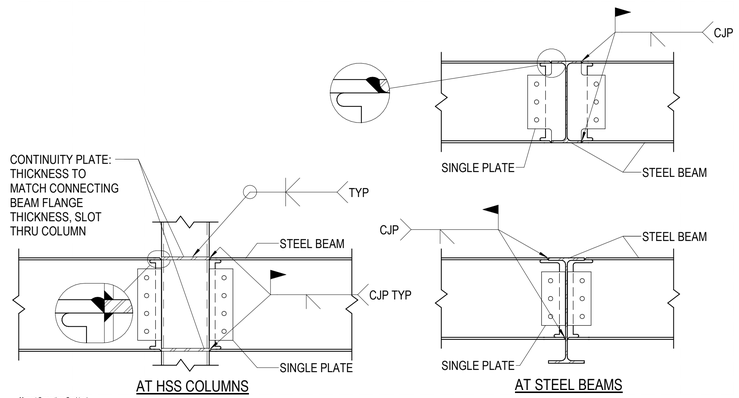

B3 / SF601 TYPICAL GRAVITY BEAM MOMENT CONNECTION

NO SCALE

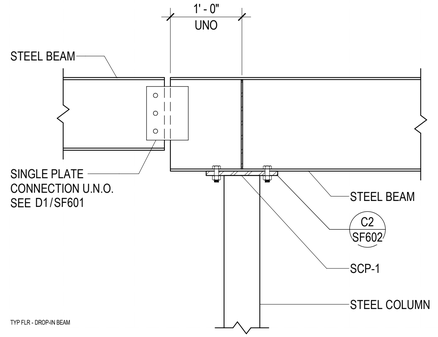

B4 / SF601 TYPICAL DROP-IN BEAM BEARING ON STEEL COLUMN

NO SCALE

ARCHITECT 1877
ajc architects
703 east 1700 south
salt lake city, utah 84105
ph: 801.466.8818
fx: 801.466.4411
www.ajcarchitects.com
LICENSED ARCHITECT NO. 170418 JEFFERY THOMAS MILLER UTAH 5/18/20

CONSULTANT

REAVELEY Engineers
675 East 500 South, Suite 400
Salt Lake City, UT 84102
P 801 486 3883
F 801 485 0911
www.reaveley.com

OWNER INFORMATION

PROJECT DESCRIPTION

UNIVERSITY OF UTAH DUMKE GYMNASTICS BUILDING

1825 E. SOUTH CAMPUS DRIVE
SALT LAKE CITY, UTAH 84112

AHJ STAMP

SHEET NAME:

TYPICAL STEEL FRAMING SCHEDULES

REVISIONS

MARK	DATE	DESCRIPTION

ISSUE DATA

ISSUE DATE:	10.04.21
ISSUE TYPE:	CD
DRAWN BY:	PD/RH
CHECKED BY:	CT/GO
CLIENT PROJECT#:	1877

SHEET NUMBER:

SF601

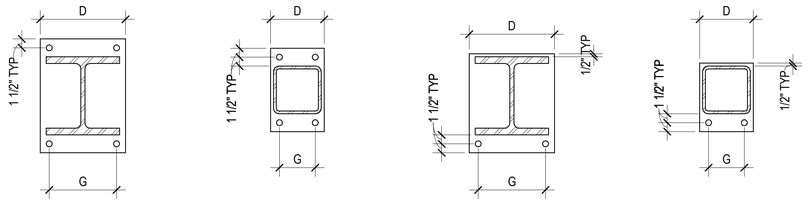

G = WORKABLE GAGE OF SUPPORTED BEAM PER AISC MANUAL TABLE 1-1 OR 3 x BOLT DIAMETER, WHICHEVER IS GREATEST.

D = COLUMN WIDTH + 1", BEAM WIDTH + 1", OR G + 3", WHICHEVER IS GREATEST.

NOTES:
1. ALL BOLTS IN CAP PLATES SHALL BE 7/8"Ø A325N IN STANDARD HOLES TYPICAL UNO.

2. CAP PLATE THICKNESS SHALL BE 3/4" TYPICAL UNO.

NEW CAP PLATE

C1 / SF602 TYPICAL STEEL CAP PLATE DETAILS FOR GRAVITY COLUMNS

NO SCALE

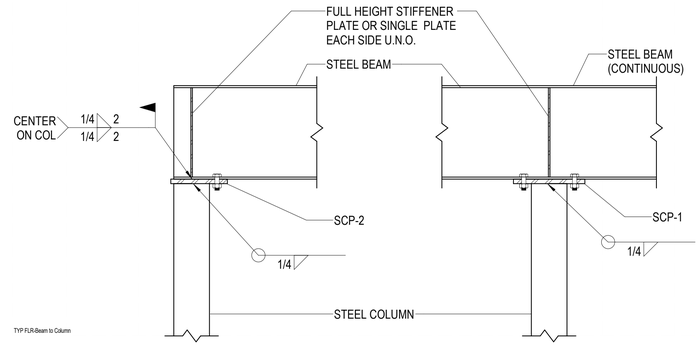

C2 / SF602 TYPICAL STEEL BEAM BEARING ON STEEL COLUMN

NO SCALE

STEEL BASE PLATE SCHEDULE						
BASE PLATE MARK	N	B	THICK-NESS	C	TYPE	REMARKS
SBP-1	10"	10"	3/4"	5"	W1	
SBP-2	8"	8"	3/4"	--	T2	NOTE 4
SBP-3	--	--	3/4"	--	T3	

NOTES:
1. BASE PLATES BEARING ON CONCRETE SHALL BE INSTALLED W/ 4-3/4"Ø ANCHOR RODS UNO. PROJECT ANCHOR RODS 3" (MIN.) ABOVE THE TOP OF THE BASE PLATE. ALL BOLTS SHALL BE INSTALLED W/ HARDENED WASHERS BENEATH THE NUT. ANY BOLT HOLES LARGER THAN THE BOLT DIAMETER PLUS 5/16" SHALL HAVE 5/16" PLATE WASHERS INSTALLED BENEATH THE HARDENED WASHERS.
2. BASE PLATES BEARING ON STEEL SHALL BE INSTALLED W/4-7/8"Ø A325 BOLTS, UNLESS NOTED OTHERWISE.
3. DO NOT WELD ANCHOR RODS
4. ORIENT BASE PLATE TOWARD CENTER OF PIER.

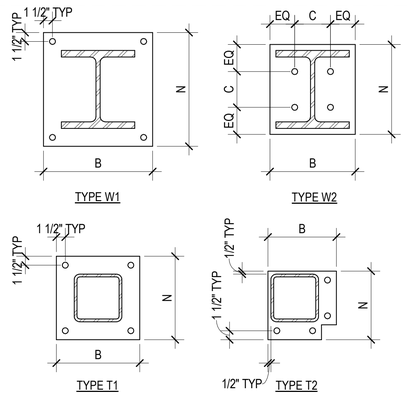

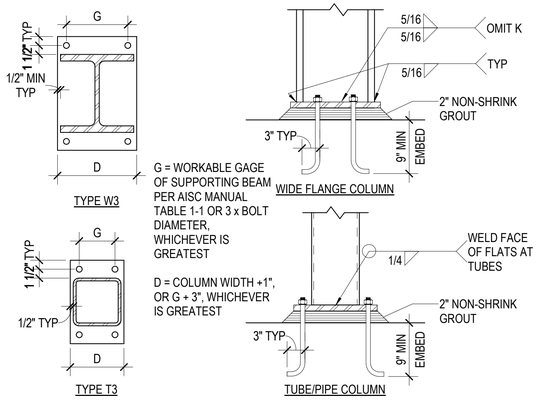

G = WORKABLE GAGE OF SUPPORTING BEAM PER AISC MANUAL TABLE 1-1 OR 3 x BOLT DIAMETER, WHICHEVER IS GREATEST

D = COLUMN WIDTH +1", OR G + 3", WHICHEVER IS GREATEST

STEEL COLUMN SCHEDULE			
MARK	SIZE	BASE PLATE TYPE	REMARKS
SC-1	W8x31	SBP-1	
SC-2	HSS4x4x1/4	SBP-2	
SC-3	HSS8x8x1/4	SEE B2/SB503	
SC-4	HSS8x4x5/8	SBP-3	

1 SEE GRAVITY COLUMN STEEL BASE PLATE SCHEDULE FOR MINIMUM ANCHOR BOLT REQUIREMENTS
2 PROVIDE CAP PLATE PER TYPICAL GRAVITY COLUMN CAP PLATE DETAILS. CAP PLATE THICKNESS SHALL BE 3/4" THICK TYP. UNO
3 COLUMN SPLICES SHALL BE LOCATED PER SPLICE DETAILS, TYPICAL, U.N.O.

B1 / SF602 TYPICAL STEEL BASE PLATE SCHEDULE & DETAILS FOR GRAVITY COLUMNS

NO SCALE

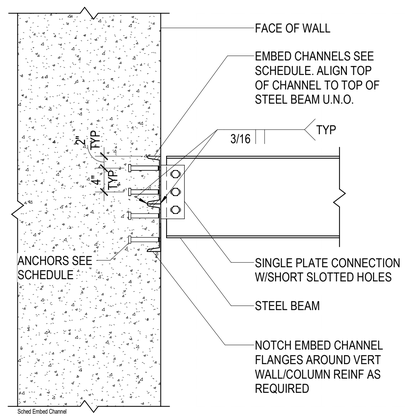

CONNECTION SCHEDULE		
BEAM DEPTH	EMBED CHANNEL	ANCHORS
TO 10"	1-C8x18.75x12"	4-3/4"Ø x 5" LONG HSA
TO 16"	2-C8x18.75x12"	8-3/4"Ø x 5" LONG HSA
TO 24"	3-C8x18.75x12"	12-3/4"Ø x 5" LONG HSA

NOTES:
1. WELD MULTIPLE EMBEDS TOGETHER WITH BUTT WELD EACH SIDE, FULL LENGTH.

2. PROVIDE 2" EDGE DISTANCE FROM END OF CHANNEL EMBED TO CENTER OF HSA, TYPICAL.

A3 / SF602 TYPICAL EMBED CHANNEL CONNECTION SCHEDULE

NO SCALE

10/4/2021 11:13:09 AM C:\Revit Models\2019-313 UU Dumke Gymnastics Remodel_pdelgadoXR9DX.rvt
ALL IDEAS, DESIGNS, ARRANGEMENTS AND PLANS INDICATED OR REPRESENTED BY THIS DRAWING ARE OWNED BY AND THE PROPERTY OF AJC ARCHITECTS PC AND WERE CREATED, EVOLVED, AND DEVELOPED FOR USE ON AND IN CONNECTION WITH THE SPECIFIED PROJECT. NONE OF THE IDEAS, DESIGNS, ARRANGEMENTS OR PLANS INDICATED IN THIS DRAWING SHALL BE USED BY OR DISCLOSED TO ANY PERSON, FIRM, OR CORPORATION FOR ANY PURPOSE WHATSOEVER WITHOUT WRITTEN CONSENT OF AJC ARCHITECTS PC. WRITTEN DIMENSIONS ON THESE DRAWINGS SHALL HAVE PRECEDENCE OVER SCALE DIMENSIONS. CONTRACTORS SHALL VERIFY AND BE RESPONSIBLE FOR ALL DIMENSIONS AND CONDITIONS ON THE JOB AND THIS OFFICE MUST BE NOTIFIED OF ANY VARIATION FROM THE DIMENSIONS AND CONDITIONS SHOWN BY THESE DRAWINGS. WARNING: REPRODUCTION HEREOF IS A CRIMINAL OFFENSE UNDER 18 U.S.C. 506. UNAUTHORIZED DISCLOSURE MAY CONSTITUTE TRADE SECRET MISAPPROPRIATION IN VIOLATION OF UC 24.2.3-1.1 ET. SEQ. AND OTHER LAWS.

ARCHITECT 1877
ajc architects
703 east 1700 south
salt lake city, utah 84105
ph: 801.466.8818
fx: 801.466.4411
www.ajcarchitects.com
LICENSED CERTIFIED STRUCTURAL ENGINEER
NO. 170418
JEFFERY THOMAS MILLER
UTAH
5/18/20

CONSULTANT
REAVELEY Engineers
675 East 500 South, Suite 400
Salt Lake City, UT 84102
P 801 486 3883
F 801 485 0911
www.reaveley.com

OWNER INFORMATION

PROJECT DESCRIPTION
UNIVERSITY OF UTAH DUMKE GYMNASTICS BUILDING
1825 E. SOUTH CAMPUS DRIVE
SALT LAKE CITY, UTAH 84112

AHJ STAMP

SHEET NAME:
STEEL COLUMN SCHEDULES & DETAILS

REVISIONS
MARK DATE DESCRIPTION

ISSUE DATA
ISSUE DATE: 10.04.21
ISSUE TYPE: CD
DRAWN BY: PD/RH
CHECKED BY: CT/GO
CLIENT PROJECT#:1877

SHEET NUMBER:
SF602

STEEL DECK SCHEDULE

STEEL DECK SCHEDULE

MARK	STEEL DECK				CONCRETE FILL			STEEL DECK ATTACHMENT	MIN. ALLOWABLE SHEAR CAPACITY	NOTES
	PROFILE	MIN I (in⁴/ft)	MIN S (in³/ft)	FINISH	THICKNESS (t)	TYPE	REINFORCEMENT			
SD-1	TYPE W2 2" DEEP x 20 GA	0.422	0.323	PHOSPHATIZED/ PAINTED	5"	NORMAL WEIGHT	6x6-W2.0xW2.0 WWF OR FIBER	SDA-1	2250 PLF @ 7'-0"	
SD-2	TYPE B 1.1/2" DEEP x 20 GA	0.219	0.230	GALVANIZED (G60)	-	-	-	SDA-2	1026 PLF @ 6'-0"	-

NOTES:
1. STEEL DECK SHALL COMPLY WITH LATEST REQUIREMENTS OF THE STEEL DECK INSTITUTE (SDI).
2. SUBMIT CURRENT CODE EVALUATION REPORT (ICC OR IAPMO) WITH LOAD AND LATERAL SHEAR CAPACITIES WITH SHOP DRAWINGS.
3. FIBER REINFORCEMENT, WHEN REQUIRED IN SCHEDULE, SHALL BE MACROSYNTHETIC FIBER REINFORCEMENT PER THE CONCRETE MATERIALS SECTION OF THE GENERAL STRUCTURAL NOTES.
4: ALL DECK SHALL BE 3-SPAN CONTINUOUS MINIMUM WHERE POSSIBLE. IN AREAS WHERE 3-SPAN CONDITIONS ARE NOT POSSIBLE THE CONTRACTOR SHALL VERIFY UN-SHORED DECK IS PERMITTED BY THE DECK MANUFACTURER FOR THE SPAN CONDITION, SPAN LENGTH, AND DECK GAUGE. WHERE DECK DOES NOT MEET THE REQUIREMENTS FOR UN-SHORED DECK, THE CONTRACTOR SHALL EITHER PROVIDE HEAVIER GAUGE DECK TO ALLOW FOR UN-SHORED DECK OR PROVIDE SHORING.
5. STEEL DECK WITHOUT CONCRETE FILL SHALL NOT BE USED TO SUPPORT LOADS FROM PLUMBING, HVAC DUCTS, LIGHT FIXTURES, ARCHITECTURAL ELEMENTS OR EQUIPMENT OF ANY KIND, UNLESS SPECIFICALLY NOTED OTHERWISE. LIGHTWEIGHT SUSPENDED ACOUSTICAL CEILINGS WITH A TOTAL WEIGHT PER WIRE NOT EXCEEDING 50# MAY BE HUNG FROM THE STEEL ROOF DECK. THE HANGERS SHOULD BE STAGGERED TO DISTRIBUTE THE LOAD OVER MULTIPLE DECK FLUTES.
6. DECK SHALL HAVE 2" MINIMUM BEARING ON ALL SUPPORTING MEMBERS (MEMBERS PERPENDICULAR TO DECK) UNO. DECKS SHALL HAVE 1.1/2" MINIMUM BEARING AT PARALLEL MEMBERS.
7. DO NOT EMBED CONDUITS OR PIPES IN CONCRETE FILL OVER STEEL DECKS WITHOUT APPROVAL OF STRUCTURAL ENGINEER.
8. SEE TYPICAL DETAILS FOR REINFORCEMENT REQUIRED AT OPENINGS THROUGH STEEL DECK. OPENING REINFORCING SHALL BE INSTALLED PRIOR TO SAW CUTTING OPENINGS.
9. PROVIDE GALVANIZED STEEL DECK ABOVE & BELOW MECHANICAL ROOMS.
10.SEE PLANS AND DETAILS FOR LOCATIONS WHERE ADDITIONAL SLAB REINFORCEMENT IS REQUIRED.

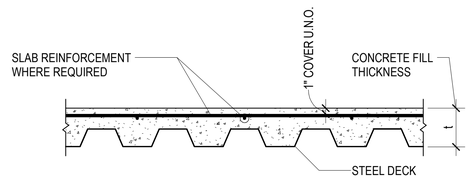

CONCRETE SLAB OVER STEEL DECK PROFILE

STEEL DECK ATTACHMENT SCHEDULE

STEEL DECK ATTACHMENT SCHEDULE

MARK	WELDED			MECHANICAL		
	SUPPORTS	PARALLEL	SIDE LAP	SUPPORTS	PARALLEL	SIDE LAP
SDA-1	PW @ 36/4	PW @ 12" O.C.	3/16" BP @ 18" O.C.	-	-	-
SDA-2	PW @ 36/7	PW @ 12" O.C.	1.1/2" TSW @ 18" O.C.			

NOTES:
1. PW = PUDDLE WELD - 1/2" EFFECTIVE DIAMETER ARC SPOT WELD AT INTERIOR FLUTES, 1" X 3/8" EFFECTIVE ARC SEAM WELD AT SUPPORTS ADJACENT TO SIDELAP.
2. TSW = TOP SEAM WELD - 1.1/2" LONG TOP SEAM WELDS BETWEEN ADJACENT PIECES OF DECKING. CRIMP SIDE SEAMS BEFORE WELDING INTERLOCKING SEAMS.
3. BP = BUTTON PUNCH - 3/16" BUTTON PUNCH BETWEEN ADJACENT PIECES OF DECK. CRIMP SEAMS BEFORE BUTTON PUNCHING INTERLOCKING SEAMS.
4. PAF = POWDER ACTUATED FASTENER -
   HILTI X-HSN 24 AT SUPPORTS 3/16" THROUGH 3/8" THICK
   HILTI X-ENP-19 L15 AT SUPPORTS 1/4" THICK AND GREATER
   PNEUTEK SDK61075 AT SUPPORTS 0.113" THROUGH 0.155" THICK
   PNEUTEK SDK63075 AT SUPPORTS 0.155" THROUGH 0.250" THICK
   PNEUTEK K64062 AT SUPPORTS 0.187" THROUGH 0.312" THICK
   PNEUTEK K66062 OR K66075 AT SUPPORTS 0.281" THICK AND GREATER
5. SDS = SELF DRILLING SCREW. WHERE SIDELAPS HAVE SCREWED CONNECTION, THE DECK PROVIDED SHALL HAVE A SCREWABLE SIDE SEAM, UNO.
6. PSC = PROPRIETARY SIDELAP CONNECTION - VERCO SIDELAP CONNECTION 2 FOR VERCO PUNCHLOK II SYSTEM, ASC DELTA GRIP FOR ASC DECKS.
7. SPACING AT SUPPORTS IS NOTED AS (DECK PANEL WIDTH)/(ATTACHMENTS PER PANEL). FOR EXAMPLE: PW @ 36/4 INDICATES A 36" WIDE DECK SHEET WITH 4 PUDDLE WELDS AT EACH SUPPORT.
8. HEADED STUD ANCHORS WELDED THROUGH DECK WITH 1" MINIMUM COVER FROM EDGE OF DECK TO STUD CENTERLINE MAY BE SUBSTITUTED ONE FOR ONE FOR PW. ALIGN AND SECURE DECK IN POSITION BEFORE INSTALLING STUDS.
9. SEE PLANS AND SFRS SHEETS FOR ADDITIONAL FASTENERS REQUIRED AT MEMBERS DENOTED AS SFRS. OMIT ATTACHMENTS WHERE DENOTED AS PROTECTED ZONES IN SFRS.
10. ALL WELDED SURFACES SHALL BE DRY BEFORE WELDING DECK OR STUDS TO SUPPORTS.
11. ALIGN AND SECURE DECK IN POSITION BEFORE WELDING OR INSTALLING FASTENERS OR STUDS.
12. ALTERNATE MEANS OF DECK ATTACHMENT ARE PERMITTED WITH APPROVAL OF THE ENGINEER. THE CONTRACTOR SHALL SUBMIT THE PROPOSED ATTACHMENT SYSTEM AND THE CODE EVALUATION REPORT DEMONSTRATING THE SYSTEM HAS THE STRENGTH TO MEET THE SPECIFIED DECK SHEAR. IF THE ALTERNATE METHOD IS APPROVED, IT IS THE RESPONSIBILITY OF THE CONTRACTOR TO ENSURE THAT THE DECK TYPE AND PROFILE IS COMPATIBLE WITH THE FASTENING SYSTEM.

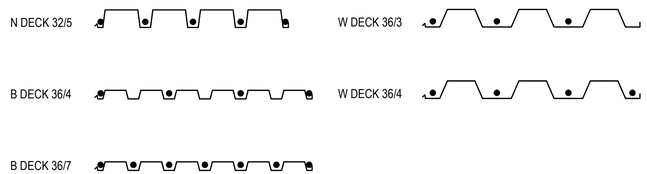

ALL IDEAS, DESIGNS, ARRANGEMENTS AND PLANS INDICATED OR REPRESENTED BY THIS DRAWING ARE OWNED BY AND THE PROPERTY OF AJC ARCHITECTS PC AND WERE CREATED, EVOLVED, AND DEVELOPED FOR USE ON AND IN CONNECTION WITH THE SPECIFIED PROJECT. NONE OF THE IDEAS, DESIGNS, ARRANGEMENTS OR PLANS INDICATED OR REPRESENTED BY THIS DRAWING MAY BE USED BY OR DISCLOSED TO ANY PERSON, FIRM, OR CORPORATION FOR ANY PURPOSE WHATSOEVER WITHOUT WRITTEN CONSENT OF AJC ARCHITECTS PC. WRITTEN DIMENSIONS ON THESE DRAWINGS SHALL HAVE PRECEDENCE OVER SCALE DIMENSIONS. CONTRACTORS SHALL VERIFY AND BE RESPONSIBLE FOR ALL DIMENSIONS AND CONDITIONS ON THE JOB AND THIS OFFICE MUST BE NOTIFIED OF ANY VARIATION FROM THE DIMENSIONS AND CONDITIONS SHOWN BY THESE DRAWINGS. WARNING: REPRODUCTION HEREOF IS A COMMERCIAL OFFENSE UNDER 18 U.S.C. 506. UNAUTHORIZED DISCLOSURE MAY CONSTITUTE TRADE SECRET MISAPPROPRIATION IN VIOLATION OF 12-24-2-1, ET. SEQ. AND OTHER LAWS.

10/4/2021 11:13:09 AM C:\Revit Models\2019-313 UU Dumke Gymnastics Remodel_pdelgado\XR9DX.rvt

ARCHITECT 1877
ajc architects
703 east 1700 south
salt lake city, utah 84105
ph: 801.466.8818
fx: 801.466.4411
www.ajcarchitects.com
LICENSED CERTIFIED STRUCTURAL ENGINEER
NO. 170418
JEFFERY THOMAS MILLER
UTAH
5/18/20

CONSULTANT

REAVELEY Engineers
675 East 500 South, Suite 400
Salt Lake City, UT 84102
P 801 486 3883
F 801 485 0911
www.reaveley.com

OWNER INFORMATION

PROJECT DESCRIPTION

UNIVERSITY OF UTAH DUMKE GYMNASTICS BUILDING

1825 E. SOUTH CAMPUS DRIVE
SALT LAKE CITY, UTAH 84112

AHJ STAMP

SHEET NAME:
STEEL DECK SCHEDULES

REVISIONS

MARK	DATE	DESCRIPTION

ISSUE DATA

ISSUE DATE:	10.04.21
ISSUE TYPE:	CD
DRAWN BY:	PD/RH
CHECKED BY:	CT/GO
CLIENT PROJECT#:	1877

SHEET NUMBER:

SF603



A1 **OVERALL SITE PLAN**
1" = 60'-0"

0' 30' 60' 120' 180'
SCALE : 1" = 60'-0"

GENERAL NOTES:

- SEE SHEET GI003 FOR GENERAL NOTES LEGENDS AND ABBREVIATIONS.
- SEE GI002 FOR DRAWING INDEX.
- DO NOT SCALE DRAWINGS.
- CONTRACTOR / SUBCONTRACTOR SHALL VERIFY ALL DIMENSIONS AND CONDITIONS BEFORE BEGINNING WORK, AND SHALL REPORT TO THE ARCHITECT ANY ERRORS, INCONSISTENCIES OR OMISSIONS BEFORE BEGINNING WORK. SEE GENERAL NOTES AND SPECIFICATIONS.
- CONTRACTOR TO ENSURE THAT ALL GRASS OUTSIDE OF THE CONSTRUCTION SITE SHALL BE PRESERVED AND PROTECTED.
- SEE CIVIL DRAWINGS FOR LIMITS OF DISTURBANCE.

KEYED NOTES:

1 TRI COLOR BEECH TREE, 2" CALIPER. FINAL LOCATION TO BE COORDINATED WITH THE UNIVERSITY OF UTAH.
2 NEW CONCRETE PAVING. SEE CIVIL DRAWINGS.
3 ACCESSIBLE PATH OF TRAVEL FROM ADA PARKING SPACE TO PRIMARY ENTRANCE OF BUILDING.

ARCHITECT 1877
ajc architects
703 east 1700 south
salt lake city, utah 84105
ph: 801.466.8818
fx: 801.466.4411
www.ajcarchitects.com

ARCHITECT / CONSULTANT

STATE OF UTAH
KENT R. RIGBY
No. 135096
05.18.2020
LICENSED ARCHITECT

OWNER INFORMATION

PROJECT DESCRIPTION

DUMKE GYMNASTICS TRAINING CENTER
1825 E. SOUTH CAMPUS DRIVE
SALT LAKE CITY, UT 84112

AHJ STAMP

SHEET NAME:
OVERALL SITE PLAN

REVISIONS

MARK	DATE	DESCRIPTION

ISSUE DATA

ISSUE DATE:	10.18.21
ISSUE TYPE:	CD
DRAWN BY:	AT|DG
CHECKED BY:	KR
PROJECT#:	1877

SHEET NUMBER:
AS100

10/18/2021 4:27:32 PM S:\ajc users\atayloi\Revit Local Files\21 0928 - 1877 - Dumke Womens Gymnastics Facility V20_detached_atayloiUV5V2.rvt
ALL IDEAS, DESIGNS, ARRANGEMENTS AND PLANS INDICATED OR REPRESENTED BY THIS DRAWING ARE OWNED BY AND THE PROPERTY OF AJC ARCHITECTS PC AND WERE CREATED, EVOLVED, AND DEVELOPED FOR USE ON AND IN CONNECTION WITH THE SPECIFIED PROJECT. NONE OF THE IDEAS, DESIGNS, ARRANGEMENTS OR PLANS SHALL BE USED BY OR DISCLOSED TO ANY PERSON, FIRM, OR CORPORATION FOR ANY PURPOSE WHATSOEVER WITHOUT WRITTEN CONSENT OF AJC ARCHITECTS PC. WRITTEN DIMENSIONS ON THESE DRAWINGS SHALL HAVE PRECEDENCE OVER SCALE DIMENSIONS. CONTRACTORS SHALL VERIFY AND BE RESPONSIBLE FOR ALL DIMENSIONS AND CONDITIONS ON THE JOB AND THIS OFFICE MUST BE NOTIFIED OF ANY VARIATION FROM THE DIMENSIONS AND CONDITIONS SHOWN BY THESE DRAWINGS. WARNING: REPRODUCTION HEREOF IS A CRIMINAL OFFENSE UNDER 18 U.S.C. SEC. 506. UNAUTHORIZED DISCLOSURE MAY CONSTITUTE TRADE SECRET MISAPPROPRIATION IN VIOLATION OF I.C.24-2-31-1 ET. SEQ. AND OTHER LAWS.

10/18/2021 4:27:35 PM S:\ajc users\taylor\Revit Local Files\21 0928 - 1877 - Dumke Womens Gymnastics Facility V20_detached_taylorUV5v2.rvt

ALL IDEAS, DESIGNS, ARRANGEMENTS AND PLANS INDICATED OR REPRESENTED BY THIS DRAWING ARE OWNED BY, AND THE PROPERTY OF, AJC ARCHITECTS PC, AND WERE CREATED, EVOLVED, AND DEVELOPED FOR USE ON, AND IN CONNECTION WITH, THE SPECIFIED PROJECT. NONE OF THE IDEAS, DESIGNS, ARRANGEMENTS OR PLANS INDICATED IN OR REPRESENTED BY THIS DRAWING, OR THEIR EQUIVALENTS, SHALL BE USED BY OR DISCLOSED TO ANY PERSON, FIRM, OR CORPORATION FOR ANY PURPOSE WHATSOEVER WITHOUT WRITTEN CONSENT OF AJC ARCHITECTS PC. WRITTEN DIMENSIONS ON THESE DRAWINGS SHALL HAVE PRECEDENCE OVER SCALE DIMENSIONS. CONTRACTORS SHALL VERIFY AND BE RESPONSIBLE FOR ALL DIMENSIONS AND CONDITIONS ON THE JOB AND THIS OFFICE MUST BE NOTIFIED OF ANY VARIATION FROM THE DIMENSIONS AND CONDITIONS SHOWN BY THESE DRAWINGS. WARNING: REPRODUCTION HEREOF IS A CRIMINAL OFFENSE UNDER 18 U.S.C. SEC. 506. UNAUTHORIZED DISCLOSURE MAY CONSTITUTE TRADE SECRET MISAPPROPRIATION IN VIOLATION OF 17 U.S.C. § 1.61 ET. SEQ. AND OTHER LAWS.

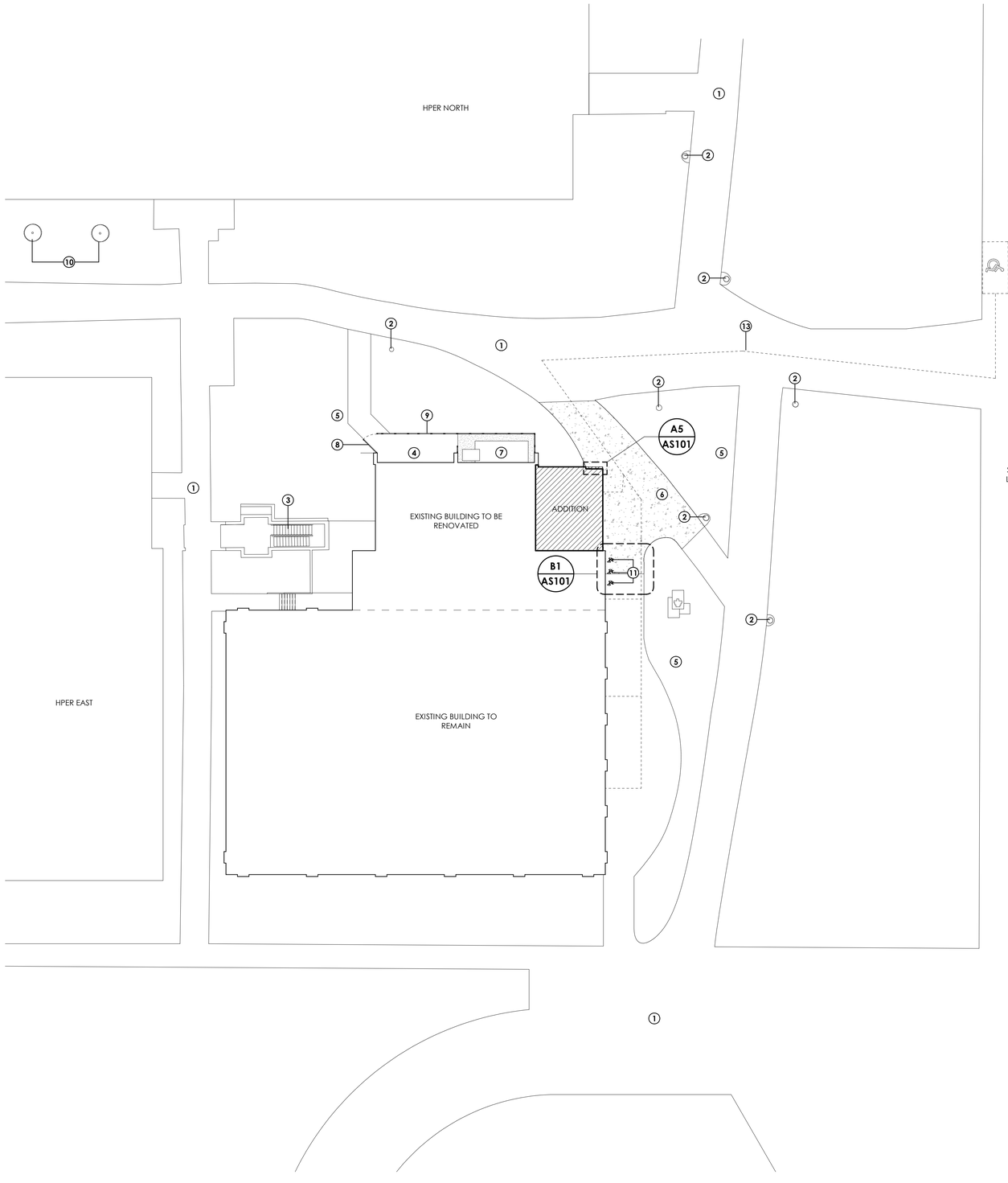

A1 ARCHITECTURAL SITE PLAN
1" = 20'-0"

0' 10' 20' 40' 60'

SCALE : 1" = 20'-0"

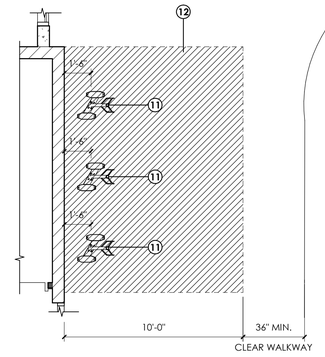

B1 BIKE RACK DETAIL
1/4" = 1'-0"

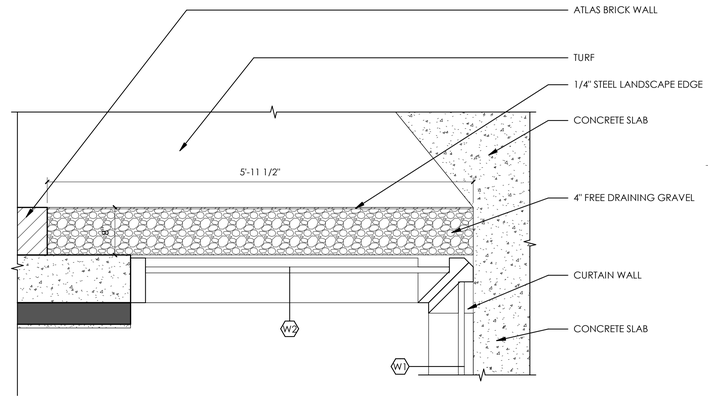

A5 SITE DETAIL - GRAVEL DRIP LINE
1" = 1'-0"

GENERAL NOTES:

- SEE SHEET GI003 FOR GENERAL NOTES LEGENDS AND ABBREVIATIONS.
- SEE GI002 FOR DRAWING INDEX.
- DO NOT SCALE DRAWINGS.
- CONTRACTOR / SUBCONTRACTOR SHALL VERIFY ALL DIMENSIONS AND CONDITIONS BEFORE BEGINNING WORK, AND SHALL REPORT TO THE ARCHITECT ANY ERRORS, INCONSISTENCIES OR OMISSIONS BEFORE BEGINNING WORK. SEE GENERAL NOTES AND SPECIFICATIONS.
- CONTRACTOR TO ENSURE THAT ALL GRASS OUTSIDE OF THE CONSTRUCTION SITE SHALL BE PRESERVED AND PROTECTED.
- SEE CIVIL DRAWINGS FOR LIMITS OF DISTRUBANCE.

KEYED NOTES:

1	EXISTING SIDEWALK.
2	EXISTING LIGHT POLE.
3	STAIRWAY THAT CONNECTS TO EXISTING HPER TUNNEL.
4	GOLF CART PARKING LOCATION.
5	PATCH AND REPAIR ALL AFFECTED LANDSCAPE AREAS.
6	NEW CONCRETE PAVING. SEE CIVIL DRAWINGS.
7	EXT. TRANQUILITY AREA. SEE AE103 FOR MORE INFORMATION.
8	CUSTOM GATE TO MATCH WELDED WIRE PLANT SUPPORT SYSTEM.
9	MODULAR WELDED WIRE PLANT SUPPORT SYSTEM. SEE SPECIFICATIONS.
10	TRI COLOR BEECH TREE. 2" CALIPER. FINAL LOCATION TO BE COORDINATED WITH THE UNIVERSITY OF UTAH.
11	GROUND CONTROL SYSTEMS VARSITY BIKE DOCK - DV215. SEE SPECS. INSTALL PER MANUFACTURER RECS.
12	BIKE PARKING ZONE.
13	ACCESSIBLE PATH OF TRAVEL FROM EXIT TO PUBLIC WAY.

ARCHITECT 1877

ajc architects

703 east 1700 south
salt lake city, utah 84105
ph: 801.466.8818
fx: 801.466.4411
www.ajcarchitects.com

ARCHITECT / CONSULTANT

STATE OF UTAH
KENT B. RIGBY
No. 135090
05.18.2020
LICENSED ARCHITECT

OWNER INFORMATION

PROJECT DESCRIPTION

DUMKE GYMNASTICS TRAINING CENTER

1825 E. SOUTH CAMPUS DRIVE
SALT LAKE CITY, UT 84112

AHJ STAMP

SHEET NAME:
ARCHITECTURAL SITE PLAN

REVISIONS

MARK	DATE	DESCRIPTION

ISSUE DATA

ISSUE DATE:	10.18.21
ISSUE TYPE:	CD
DRAWN BY:	AT|DG
CHECKED BY:	KR
PROJECT#:	1877

SHEET NUMBER:

AS101

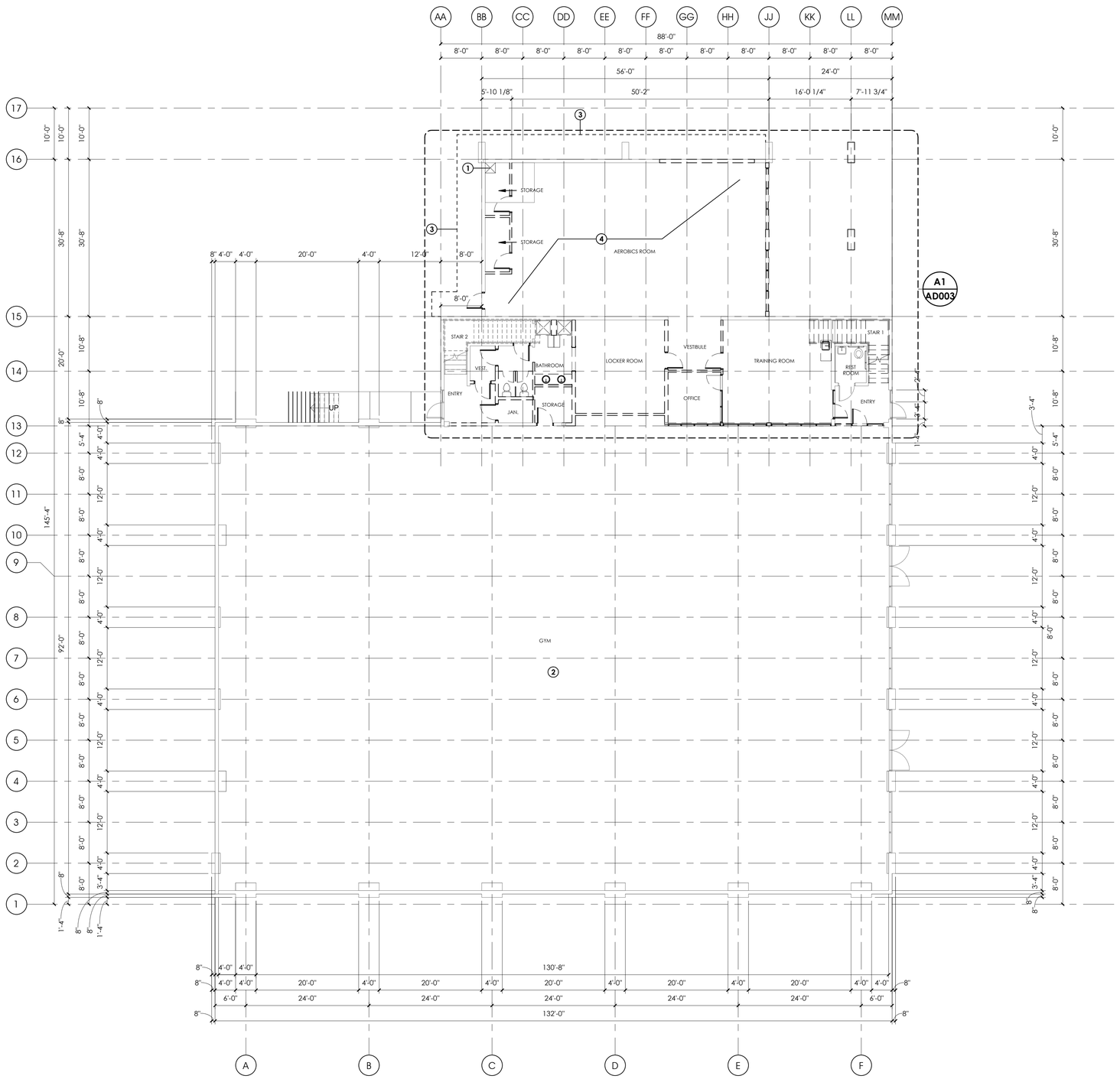

GENERAL NOTES:

- SEE SHEET GI003 FOR GENERAL NOTES LEGENDS AND ABBREVIATIONS.
- SEE GI002 FOR DRAWING INDEX.
- DO NOT SCALE DRAWINGS.
- CONTRACTOR / SUBCONTRACTOR SHALL VERIFY ALL DIMENSIONS AND CONDITIONS BEFORE BEGINNING WORK, AND SHALL REPORT TO THE ARCHITECT ANY ERRORS, INCONSISTENCIES OR OMISSIONS BEFORE BEGINNING WORK. SEE GENERAL NOTES AND SPECIFICATIONS.
- CONTRACTOR TO COORDINATE WITH OWNER ON WHAT EQUIPMENT SHOULD BE KEPT PRIOR TO START OF DEMOLITION.

DEMOLITION NOTES:

- ALL ITEMS SHOWN THIS PAGE ARE EXISTING TO REMAIN UNLESS NOTED OTHERWISE GRAPHICALLY OR BY KEYED NOTE. EXTENTS OF THIS SELECTIVE DEMOLITION PACKAGE ARE THE BUILDING'S ENVELOPE AND ANY SMALL PENETRATIONS TO BE SEALED TO MAINTAIN AN AIRTIGHT ENVELOPE. CONTRACTOR TO PROVIDE ANY TEMPORARY CONSTRUCTION TO MAINTAIN ENVELOPE INTEGRITY.
- STANDARD GRAPHIC REPRESENTATIONS OF WALLS, DOORS, PLUMBING FIXTURES & TOILET ACCESSORIES INDEPENDENTLY REFERENCE DEMO OR EXISTING TO REMAIN CONDITIONS WITH OR WITHOUT AN ATTACHED KEYED NOTE. PROVIDE DEMO OF ALL ITEMS SHOWN DASHED. (SEE PRECEDING NOTE).
- SEE MECHANICAL/PLUMBING (MD/PD) DEMO & ELECTRICAL (ED) DEMO SHEETS AND SPECIFICATIONS FOR ADDITIONAL DEMOLITION OR EXISTING CONDITIONS INFORMATION. WHERE PLUMBING, MECHANICAL OR ELECTRICAL ITEMS ARE SHOWN DEMO'D ON THIS PAGE, THE INFORMATION IS SUPPLIED AS A SUPPLEMENT TO THE MD SHEETS AND ED SHEETS. THE EXTENT OF THE DEMOLITION IS AS PER REQUIRED BY THE SPECIFICATIONS, MD SHEETS AND ED SHEETS.
- DISPOSE OF ALL MATERIALS MARKED AS "REMOVE" OR "DEMO" RECYCLE REMOVED MATERIALS WHENEVER PRACTICAL." CONDITIONS MARKED "SALVAGED" ARE REUSED DURING NEW CONSTRUCTION AND SHOULD BE PROTECT UNTIL REINSTALLATION. COORDINATE WITH ARCHITECT ANY DISCREPENCIES.
- REMOVE EXISTING MILLWORK AND PLUMBING FIXTURE(S) WHERE SHOWN. REMOVE PLUMBING PER SPEC. & PD SHEETS. CAP PLUMBING LINES AT BUILDING ENVELOPE.
- REMOVE ALL INTERIOR DOOR/WINDOW FRAME AND GLAZING WHERE SHOWN.
- EXISTING ROOF DRAIN LINE DROPS TO REMAIN U.N.O. PROTECT. SEE PLUMBING.
- REMOVE EXISITNG (STUBBED OUT OR PARTIALLY DEMO'D) PIPING AS PER SPEC. & MECHANICAL/PLUMBING SHEETS. CAP AT BUILDING ENVELOPE WHERE OCCURS.
- REMOVE EXISTING ELECTRICAL AND LIGHTING WHERE SHOWN. SEAL PENETRATIONS THROUGH BUILDING ENVELOPE WHERE OCCURS.
- REMOVE EXISTING CARPET AND BASE WHERE SHOWN. RECYCLE TO EXTENT POSSIBLE.
- REMOVE EXISTING TILE, BASE AND SETTING BEDS, WHERE SHOWN. RECYCLE TO EXTENT POSSIBLE.
- REMOVE EXISTING BRICK FLOORING AND MORTAR WHERE OCCURS
- REFLECTED CEILING PLANS ARE NOT INTENDED TO BE A LIGHTING DEMOLITION PLAN. NO WALL MOUNTED LIGHTING FIXTURES OR OTHER WALL MOUNTED APPURTENANCES ARE SHOWN. SEE THE LIGHTING DEMO PLAN FOR ALL LIGHTING AND EGRESS SIGNS, SIZE AND TYPES OF ELECTRICAL FIXTURES ETC. SEE MECHANICAL PLANS FOR ALL CEILING MOUNTED DIFFUSERS /GRILLES ETC.
- MAINTAIN EXISTING FLOOR/CEILING/ROOF/CEILING AND SHAFT FIRE RATINGS AND ASSEMBLIES. REPAIR AND SEAL ALL PUNCTURES AND GAPS.
- EXISTING 8" REINFORCED MASONRY WALL SHOWN DASHED TO BE REMOVED/RECYCLED IN ITS ENTIRETY.
- EXISTING METAL STUD & GYP BOARD WALL SHOWN DASHED TO BE REMOVED/RECYCLED IN ITS ENTIRETY.
- EXISTING ALUMINUM STOREFRONT SYSTEM & GLAZING SHOWN DASHED TO BE REMOVED/RECYCLED IN ITS ENTIRETY.
- EXISTING DOOR & FRAME SHOWN DASHED TO BE REMOVED/RECYCLED IN ITS ENTIRETY.
- REMOVE AND RECYCLE/SALVAGE ALL EXISTING FURNITURE, FIXTURES, AND EQUIPMENT, SHOWN DASHED.

DEMOLITION DEFINTIONS:

REMOVE: UNLESS ITEMS ARE OTHERWISE INDICATED TO BE REINSTALLED OR SALVAGED, REMOVE AND DISPOSE BY RECYCLING TO GREATEST EXTENT POSSIBLE OR IS PRACTICAL

REMOVE AND REINSTALL: REMOVE ITEMS INDICATED; CLEAN, SERVICE AND OTHERWISE PERPARE FOR SERVICE; REINSTALL IN THE SAME LOCATION (OR IN THE LOCATION INDICATED).

REMOVE AND INSTALL NEW: REMOVE AND DISPOSE OF ITEMS INDCATED AND INSTALL NEW ITEMS IN THE SAME LOCATION (OR IN THE LOCATION INDICATED).

REMOVE AND SALVAGE: ITEMS INDICATED TO BE SALVAGED WILL REMAIN THE OWNER'S PROPERTY. CAREFULLY REMOVE AND CLEAN ITEMS INDICATED TO BE SALVAGED; PACK OR CRATE TO PROTECT AGAINST DAMAGE; IDENTIFY CONTENTS OF CONTAINERS; DELIVER TO THE LOCATION INDICATED.

REMOVE AND RECYCLE: REMOVE AND RECYCLE TO THE GRATEST EXTENT PRACTICAL OF ITEMS INDICATED. ALL DEMOLISHED OR REMOVED ITEMS AND MATERIALS SHALL BE CONSIDERED SCRAP, EXCEPT FOR THOSE INDICATED TO REMAIN, THOSE INDICATED TO BE REINSTALLED, AND THOSE INDICATED TO BE SALVAGED.

EXISTING TO REMAIN: CONSTRUCTION OR ITEMS INDICATED TO REMAIN SHALL BE PROTECTED AGAINST DAMAGE DURING DEMOLITION OPERATIONS. WHERE PRACTICABLE, AND WITH THE ARCHITECT'S PERMISSION, THE CONTRACTOR MAY ELECT TO REMOVE ITEMS TO A SUITABLE STORAGE LOCATION DURING DEMOLITION AND THEN PROPERLY CLEAN AND REINSTALL THE ITEMS.

KEYED NOTES:

1 EXISTING ROOF DRAIN LINE DROP. PROTECT.
2 EXISTING GYMNASIUM AREA TO REMAIN. PROTECT.
3 LINE OF EXCAVATION FOR NEW CONCRETE FOOTINGS. SEE SB101.
4 ENTIRE SLAB IN AEROBICS ROOM TO BE DEMOLISHED.

A1 DEMOLITION REFERENCE PLAN - LEVEL 01
3/32" = 1'-0"

SCALE : 3/32" = 1'-0"

ARCHITECT 1877
ajc architects
703 east 1700 south
salt lake city, utah 84105
ph: 801.466.8818
fx: 801.466.4411
www.ajcarchitects.com

ARCHITECT / CONSULTANT

STATE OF UTAH
KENT B. RIGBY
No. 135090
05.18.2020
LICENSED ARCHITECT

OWNER INFORMATION

PROJECT DESCRIPTION

DUMKE GYMNASTICS TRAINING CENTER

1825 E. SOUTH CAMPUS DRIVE
SALT LAKE CITY, UT 84112

AHJ STAMP

SHEET NAME:
DEMOLITION NOTES & REFERENCE PLAN - LEVEL 01

REVISIONS

MARK	DATE	DESCRIPTION

ISSUE DATA

ISSUE DATE:	10.18.21
ISSUE TYPE:	CD
DRAWN BY:	AT|DG
CHECKED BY:	KR
PROJECT#:	1877

SHEET NUMBER:
AD001

10/18/2021 4:26:31 PM S:\ajc_users\ataylor\Revit Local Files\21 0928 - 1877 - Dumke Womens Gymnastics Facility V20_detached_ataylorUv5V2.rvt
ALL IDEAS, DESIGNS, ARRANGEMENTS AND PLANS INDICATED OR REPRESENTED BY THIS DRAWING ARE OWNED BY AND THE PROPERTY OF AJC ARCHITECTS PC, AND WERE CREATED, EVOLVED, AND DEVELOPED FOR USE ON AND IN CONNECTION WITH THE SPECIFIED PROJECT. NONE OF THE IDEAS, DESIGNS, ARRANGEMENTS OR PLANS INDICATED OR REPRESENTED BY THIS DRAWING OR THE OTHER DRAWINGS, SPECIFICATIONS OR OTHER DOCUMENTS PREPARED BY AJC ARCHITECTS PC FOR THIS PROJECT, INCLUDING WITHOUT LIMITATION THE OVERALL FORM AND ARRANGEMENT OF ALL BUILDINGS AND IMPROVEMENTS, SHALL BE USED BY OR DISCLOSED TO ANY PERSON, FIRM, OR CORPORATION FOR ANY PURPOSE WHATSOEVER WITHOUT WRITTEN CONSENT OF AJC ARCHITECTS PC. WRITTEN DIMENSIONS ON THESE DRAWINGS SHALL HAVE PRECEDENCE OVER SCALE DIMENSIONS. CONTRACTORS SHALL VERIFY AND BE RESPONSIBLE FOR ALL DIMENSIONS AND CONDITIONS ON THE JOB AND THIS OFFICE MUST BE NOTIFIED OF ANY VARIATION FROM THE DIMENSIONS AND CONDITIONS SHOWN BY THESE DRAWINGS. WARNING: REPRODUCTION HEREOF IS A CRIMINAL OFFENSE UNDER 18 U.S.C. SEC. 506. UNAUTHORIZED DISCLOSURE MAY CONSTITUTE TRADE SECRET MISAPPROPRIATION IN VIOLATION OF 7-C 24-2-311-1 ET. SEQ. AND OTHER LAWS.

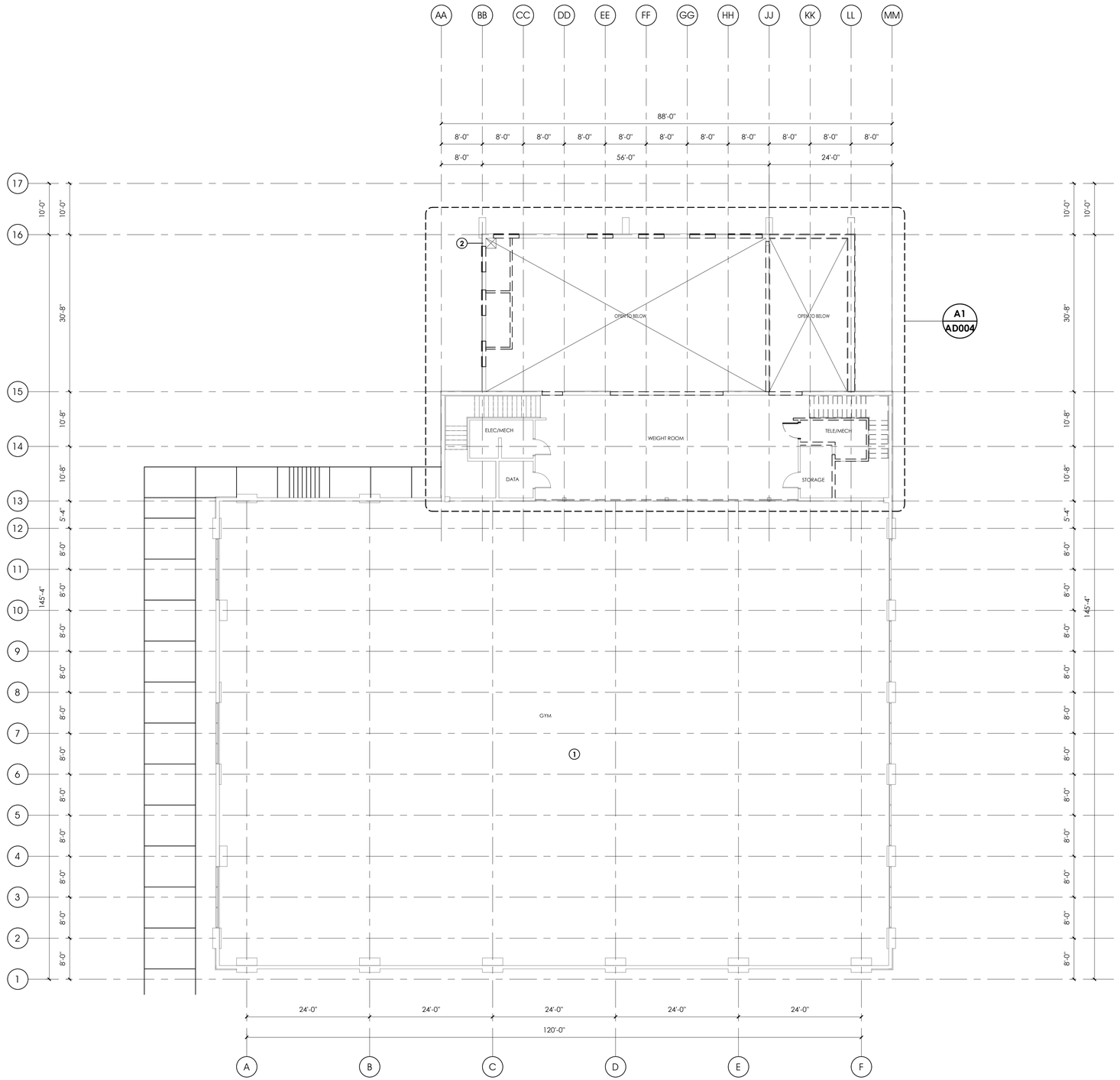

GENERAL NOTES:

- SEE SHEET GI003 FOR GENERAL NOTES LEGENDS AND ABBREVIATIONS.
- SEE GI002 FOR DRAWING INDEX.
- DO NOT SCALE DRAWINGS.
- CONTRACTOR / SUBCONTRACTOR SHALL VERIFY ALL DIMENSIONS AND CONDITIONS BEFORE BEGINNING WORK, AND SHALL REPORT TO THE ARCHITECT ANY ERRORS, INCONSISTENCIES OR OMISSIONS BEFORE BEGINNING WORK. SEE GENERAL NOTES AND SPECIFICATIONS.
- CONTRACTOR TO COORDINATE WITH OWNER ON WHAT EQUIPMENT SHOULD BE KEPT PRIOR TO DEMOLITION.
- SEE SHEET AD001 FOR DEMOLITION NOTES & DEFINITIONS.
- PATCH AND REPAIR FOR EXPOSED SURFACES AFTER DEMO.

KEYED NOTES:

1 EXISTING GYMNASIUM AREA TO REMAIN. PROTECT.
2 EXISTING ROOF DRAIN LINE DROP. PROTECT.

A1 DEMOLITION REFERENCE PLAN - LEVEL 02
3/32" = 1'-0"

0' 5'-4" 10'-8" 21'-4" 32'-0"
SCALE : 3/32" = 1'-0"

ARCHITECT 1877
ajc architects
703 east 1700 south
salt lake city, utah 84105
ph: 801.466.8818
fx: 801.466.4411
www.ajcarchitects.com

ARCHITECT / CONSULTANT

STATE OF UTAH
KENT B. RIGBY
No. 135090
05.18.2020
LICENSED ARCHITECT

OWNER INFORMATION

PROJECT DESCRIPTION

DUMKE GYMNASTICS TRAINING CENTER

1825 E. SOUTH CAMPUS DRIVE
SALT LAKE CITY, UT 84112

AHJ STAMP

SHEET NAME:
DEMOLITION REFERENCE PLAN - LEVEL 02

REVISIONS

MARK	DATE	DESCRIPTION

ISSUE DATA

ISSUE DATE:	10.18.21
ISSUE TYPE:	CD
DRAWN BY:	AT|DG
CHECKED BY:	KR
PROJECT#:	1877

SHEET NUMBER:
AD002

10/18/2021 4:26:33 PM S:\ajc users\ataylor\Revit Local Files\21 0928 - 1877 - Dumke Womens Gymnastics Facility V20_detached_ataylorUV5V2.rvt

ALL IDEAS, DESIGNS, ARRANGEMENTS AND PLANS INDICATED OR REPRESENTED BY THIS DRAWING ARE OWNED BY AND THE PROPERTY OF AJC ARCHITECTS PC AND WERE CREATED, EVOLVED, AND DEVELOPED FOR USE ON AND IN CONNECTION WITH THE SPECIFIED PROJECT. NONE OF THE IDEAS, DESIGNS, ARRANGEMENTS OR PLANS INDICATED IN OR REPRESENTED BY THIS DRAWING, ALL OF WHICH ARE OWNED BY AJC ARCHITECTS PC, ARE TO BE USED BY OR DISCLOSED TO ANY PERSON, FIRM, OR CORPORATION FOR ANY PURPOSE WHATSOEVER WITHOUT WRITTEN CONSENT OF AJC ARCHITECTS PC. WRITTEN DIMENSIONS ON THESE DRAWINGS SHALL HAVE PRECEDENCE OVER SCALE DIMENSIONS. CONTRACTORS SHALL VERIFY AND BE RESPONSIBLE FOR ALL DIMENSIONS AND CONDITIONS ON THE JOB AND THIS OFFICE MUST BE NOTIFIED OF ANY VARIATION FROM THE DIMENSIONS AND CONDITIONS SHOWN BY THESE DRAWINGS. WARNING: REPRODUCTION HEREOF IS A CRIMINAL OFFENSE UNDER 18 U.S.C. 506. UNAUTHORIZED DISCLOSURE MAY CONSTITUTE TRADE SECRET MISAPPROPRIATION IN VIOLATION OF 17 U.S.C. § 1.01 ET. SEQ. AND OTHER LAWS.

10/18/2021 4:26:35 PM S:\ajc users\aytaylor\Revit Local Files\21 0928 - 1877 - Dumke Womens Gymnastics Facility V20_detached_aytaylorUV5V2.rvt
ALL IDEAS, DESIGNS, ARRANGEMENTS AND PLANS INDICATED OR REPRESENTED BY THIS DRAWING ARE OWNED BY, AND THE PROPERTY OF, AJC ARCHITECTS, PC, AND WERE CREATED, EVOLVED, AND DEVELOPED FOR USE ON, AND IN CONNECTION WITH, THE SPECIFIED PROJECT. NONE OF THE IDEAS, DESIGNS, ARRANGEMENTS OR PLANS INDICATED OR REPRESENTED BY THIS DRAWING OR OTHERWISE FURNISHED BY AJC ARCHITECTS, PC, MAY BE USED BY, OR DISCLOSED TO, ANY PERSON, FIRM, OR CORPORATION FOR ANY PURPOSE WHATSOEVER WITHOUT WRITTEN CONSENT OF AJC ARCHITECTS PC. WRITTEN DIMENSIONS ON THESE DRAWINGS SHALL HAVE PRECEDENCE OVER SCALE DIMENSIONS. CONTRACTORS SHALL VERIFY AND BE RESPONSIBLE FOR ALL DIMENSIONS AND CONDITIONS ON THE JOB AND THIS OFFICE MUST BE NOTIFIED OF ANY VARIATION FROM THE DIMENSIONS AND CONDITIONS SHOWN BY THESE DRAWINGS. WARNING: REPRODUCTION HEREOF IS A CRIMINAL OFFENSE UNDER 18 U.S.C. 506. UNAUTHORIZED DISCLOSURE MAY CONSTITUTE TRADE SECRET MISAPPROPRIATION IN VIOLATION OF 17 U.S.C. § 1.61, ET. SEQ. AND OTHER LAWS.

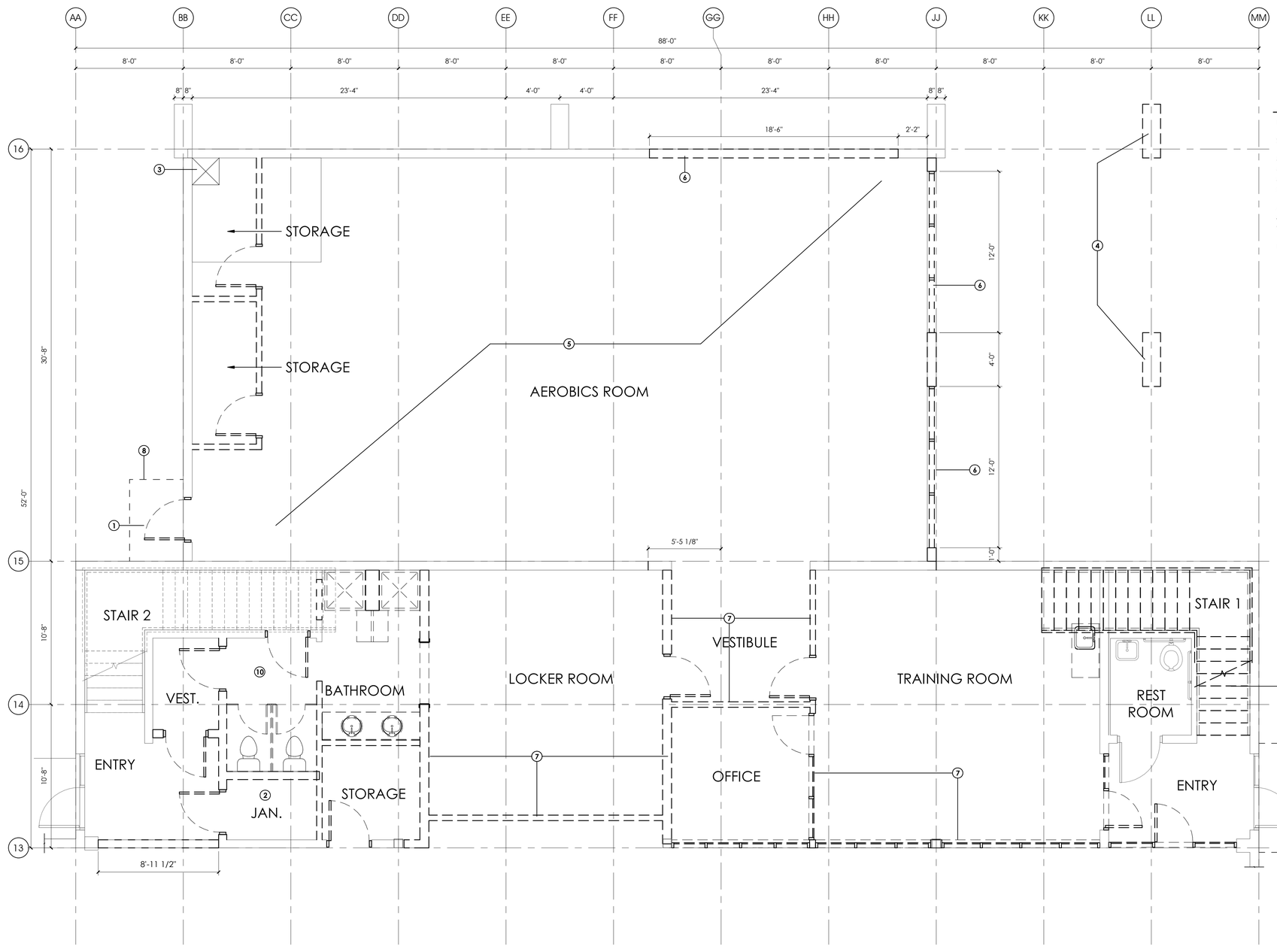

GENERAL NOTES:

- SEE SHEET GI003 FOR GENERAL NOTES LEGENDS AND ABBREVIATIONS.
- SEE GI002 FOR DRAWING INDEX.
- DO NOT SCALE DRAWINGS.
- CONTRACTOR / SUBCONTRACTOR SHALL VERIFY ALL DIMENSIONS AND CONDITIONS BEFORE BEGINNING WORK, AND SHALL REPORT TO THE ARCHITECT ANY ERRORS, INCONSISTENCIES OR OMISSIONS BEFORE BEGINNING WORK. SEE GENERAL NOTES AND SPECIFICATIONS.
- CONTRACTOR TOCOORDINATE WITH OWNER ON WHAT EQUIPMENT SHOULD BE KEPT PRIOR TO START OF DEMOLITION.
- SEE SHEET AD001 FOR DEMOLITION NOTES & DEFINITIONS.
- PATCH AND REPAIR FOR EXPOSED SURFACES AFTER DEMO.
- IN THE TRAINING ROOM, REMOVE ALL FINISH FLOOR AND ADHESIVE. PATCH, REPAIR AND LEVEL THE FLOOR. PREP THE CONCRETE FOR A RUBBER FLOOR TILE AS PER SPECIFICATIONS.

KEYED NOTES:

1	REMOVE DOOR AND FRAME AND INFILL WITH ATLAS BRICK. REMOVE CANOPY ABOVE DOOR AND PATCH AND REPAIR BRICK.
2	FIRE ALARM EQUIPMENT AND FIRE SUPPRESSION SYSTEM TO BE REPIPED & MOVED FROM THIS LOCATION. SEE AE103 FOR MORE INFORMATION.
3	EXISTING ROOF DRAIN LINE DROP. PROTECT.
4	REMOVE EXISTING COLUMNS & FOOTINGS.
5	ENTIRE SLAB IN AEROBICS ROOM TO BE DEMOLISHED.
6	REMOVE TOP 4" OF EXISTING FOUNDATION FOR NEW SLAB TO POUR OVER @ OPENINGS.
7	PREP FOR NEW FLOORING AFTER DEMO, TYP. COORDINATE W/ FINISH PLAN.
8	DEMO EXISTING CANOPY ABOVE DOOR. PATCH AND REPAIR WALL SURFACE.
9	EXISTING STAIR TO BE DEMOLISHED. PATCH AND REPAIR WALLS AND FLOOR AS NEEDED.
10	SLAB WILL NEED TO BE DEMOLISHED AS NEEDED FOR PLUMBING, TYP.

A1 **PARTIAL DEMO PLAN - LEVEL 01**
1/4" = 1'-0"

0' 2' 4' 8' 12'
SCALE : 1/4" = 1'-0"

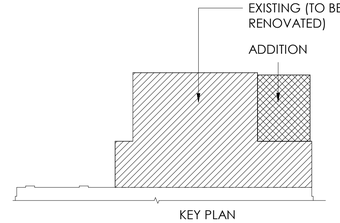

ARCHITECT 1877
ajc architects
703 east 1700 south
salt lake city, utah 84105
ph: 801.466.8818
fx: 801.466.4411
www.ajcarchitects.com

ARCHITECT / CONSULTANT

STATE OF UTAH
KENT B. RIGBY
No. 135090
05.18.2020
LICENSED ARCHITECT

OWNER INFORMATION

PROJECT DESCRIPTION

DUMKE GYMNASTICS TRAINING CENTER

1825 E. SOUTH CAMPUS DRIVE
SALT LAKE CITY, UT 84112

AHJ STAMP

SHEET NAME:
PARTIAL DEMOLITION PLAN - LEVEL 01

REVISIONS

MARK	DATE	DESCRIPTION

ISSUE DATA

ISSUE DATE:	10.18.21
ISSUE TYPE:	CD
DRAWN BY:	AT|DG
CHECKED BY:	KR
PROJECT#:	1877

SHEET NUMBER:
AD003

10/18/2021 4:26:37 PM S:\ajc users\ataylor\Revit Local Files\21 0928 - 1877 - Dumke Womens Gymnastics Facility V20_detached_ataylorUV5V2.rvt
ALL IDEAS, DESIGNS, ARRANGEMENTS AND PLANS INDICATED OR REPRESENTED BY THIS DRAWING ARE OWNED BY AND THE PROPERTY OF AJC ARCHITECTS PC AND WERE CREATED, EVOLVED, AND DEVELOPED FOR USE ON AND IN CONNECTION WITH THE SPECIFIED PROJECT. NONE OF THE IDEAS, DESIGNS, ARRANGEMENTS OR PLANS INDICATED IN OR REPRESENTED BY THIS DRAWING, IN WHOLE OR IN PART, SHALL BE USED BY OR DISCLOSED TO ANY PERSON, FIRM, OR CORPORATION FOR ANY PURPOSE WHATSOEVER WITHOUT WRITTEN CONSENT OF AJC ARCHITECTS PC. WRITTEN DIMENSIONS ON THESE DRAWINGS SHALL HAVE PRECEDENCE OVER SCALE DIMENSIONS. CONTRACTORS SHALL VERIFY AND BE RESPONSIBLE FOR ALL DIMENSIONS AND CONDITIONS ON THE JOB AND THIS OFFICE MUST BE NOTIFIED OF ANY VARIATION FROM THE DIMENSIONS AND CONDITIONS SHOWN BY THESE DRAWINGS. WARNING - REPRODUCTION HEREOF IS A CRIMINAL OFFENSE UNDER 18 U.S.C. SEC. 506. UNAUTHORIZED DISCLOSURE MAY CONSTITUTE TRADE SECRET MISAPPROPRIATION IN VIOLATION OF 17 U.S.C. § 1831 ET. SEQ. AND OTHER LAWS.

GENERAL NOTES:

- SEE SHEET GI003 FOR GENERAL NOTES LEGENDS AND ABBREVIATIONS.
- SEE GI002 FOR DRAWING INDEX.
- DO NOT SCALE DRAWINGS.
- CONTRACTOR / SUBCONTRACTOR SHALL VERIFY ALL DIMENSIONS AND CONDITIONS BEFORE BEGINNING WORK, AND SHALL REPORT TO THE ARCHITECT ANY ERRORS, INCONSISTENCIES OR OMISSIONS BEFORE BEGINNING WORK. SEE GENERAL NOTES AND SPECIFICATIONS.
- CONTRACTOR TOCOORDINATE WITH OWNER ON WHAT EQUIPMENT SHOULD BE KEPT PRIOR TO START OF DEMOLITION.
- SEE SHEET AD001 FOR DEMOLITION NOTES & DEFINITIONS.
- PATCH AND REPAIR FOR EXPOSED SURFACES AFTER DEMO.

KEYED NOTES:

1	EXISTING ROOF DRAIN LINE DROP. PROTECT.
2	SEE STRUCTURAL DRAWINGS FOR INFORMATION ON SHORING DURING DEMOLITION.
3	DEMO EXISTING GUARD RAIL ONLY IF ADD ALT #3 IS TAKEN.
4	REMOVE EXISTING EXTERIOR CONCRETE BEAMS
5	CUT OPENING IN MASONRY WALL ONLY AS LARGE AS NEED IN ORDER TO FIT NEW WINDOWS. DO NOT OVERCUT CORNERS.
6	EXISTING SHELVES TO BE DEMOLISHED.
7	EXISTING STAIR TO BE DEMOLISHED. PATCH AND REPAIR WALLS AND FLOOR AS NEEDED.
8	CUT OPENING IN MASONRY WALL ONLY AS LARGE AS NEED IN ORDER TO FIT NEW DOORS. DO NOT OVERCUT CORNERS.

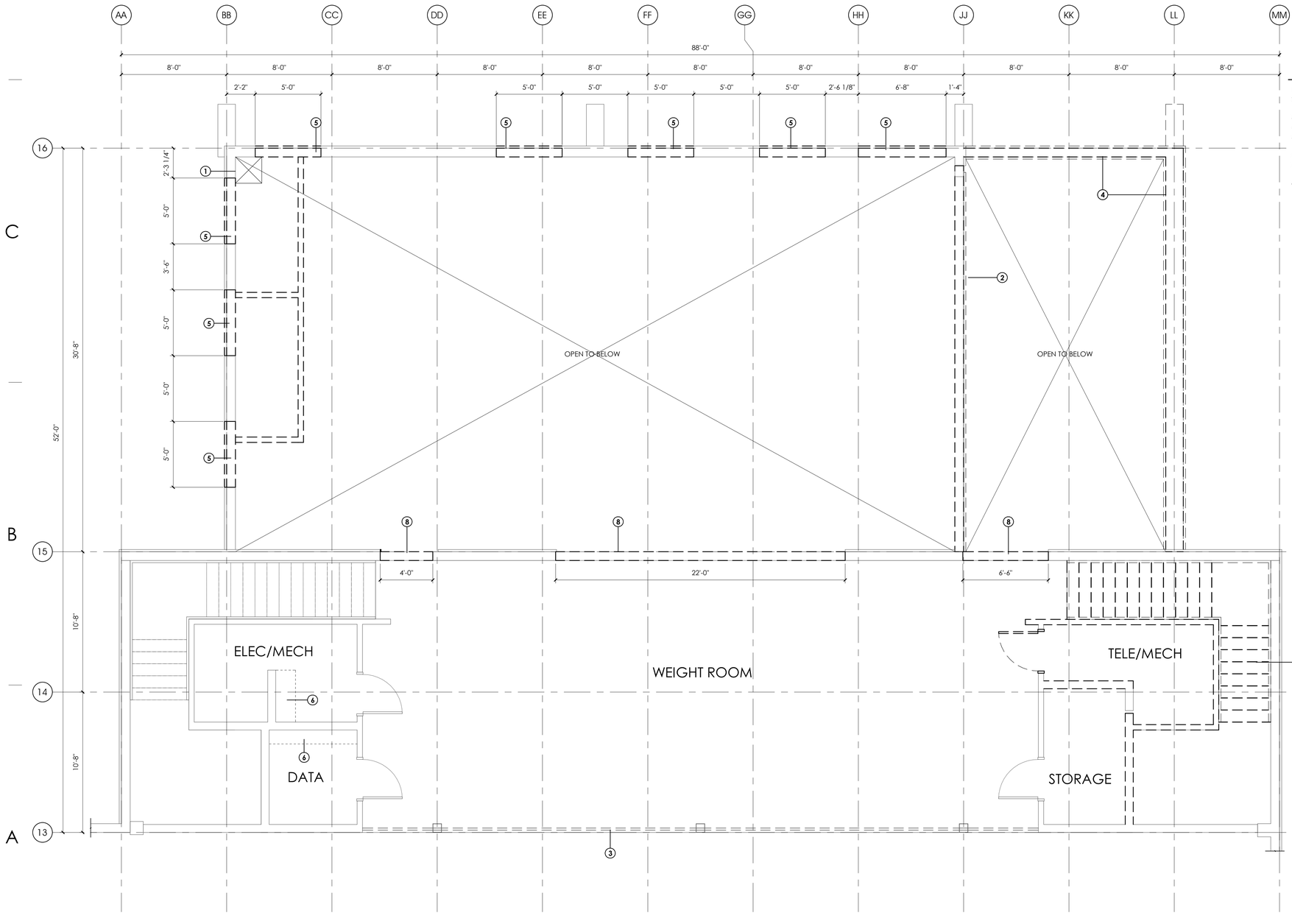

A1 PARTIAL DEMO PLAN - LEVEL 02
1/4" = 1'-0"

SCALE : 1/4" = 1'-0"

ARCHITECT 1877
ajc architects
703 east 1700 south
salt lake city, utah 84105
ph: 801.466.8818
fx: 801.466.4411
www.ajcarchitects.com

ARCHITECT / CONSULTANT

STATE OF UTAH
KENT B. RIGBY
No. 135090
05.18.2020
LICENSED ARCHITECT

OWNER INFORMATION

PROJECT DESCRIPTION

DUMKE GYMNASTICS TRAINING CENTER
1825 E. SOUTH CAMPUS DRIVE
SALT LAKE CITY, UT 84112

AHJ STAMP

SHEET NAME:
PARTIAL DEMOLITION PLAN - LEVEL 02

REVISIONS

MARK	DATE	DESCRIPTION

ISSUE DATA

ISSUE DATE:	10.18.21
ISSUE TYPE:	CD
DRAWN BY:	AT|DG
CHECKED BY:	KR
PROJECT#:	1877

SHEET NUMBER:
AD004

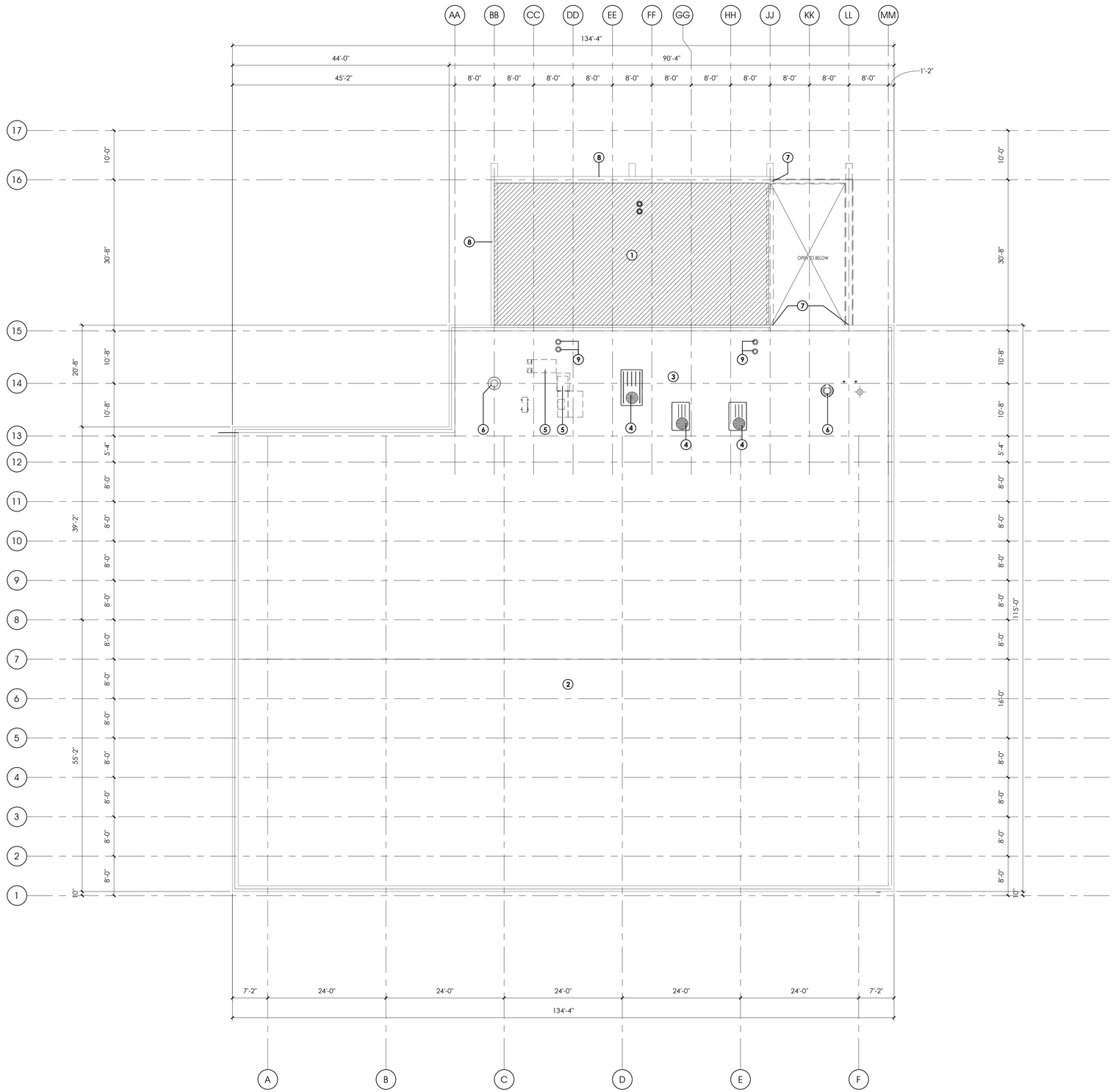

A1 DEMO ROOF PLAN

3/32" = 1'-0"

0' 5'-4" 10'-8" 21'-4" 32'-0"

SCALE : 3/32" = 1'-0"

GENERAL NOTES:

- SEE SHEET GI003 FOR GENERAL NOTES LEGENDS AND ABBREVIATIONS.
- SEE GI002 FOR DRAWING INDEX.
- DO NOT SCALE DRAWINGS.
- CONTRACTOR / SUBCONTRACTOR SHALL VERIFY ALL DIMENSIONS AND CONDITIONS BEFORE BEGINNING WORK, AND SHALL REPORT TO THE ARCHITECT ANY ERRORS, INCONSISTENCIES OR OMISSIONS BEFORE BEGINNING WORK. SEE GENERAL NOTES AND SPECIFICATIONS.
- EXISTING ROOFING WARRANTY TO BE MAINTAINED BY ROOFING CONTRACTOR RESPONSIBLE FOR NEW WORK. COORDINATE WITH THE UNIVERSITY OF UTAH.
- SEE SHEET AD001 FOR DEMOLITION NOTES & DEFINITIONS.

KEYED NOTES:

1	EXISTING ROOF STRUCTURE AND ROOFING MEMBRANE + INSULATION OVER AEROBICS AREA TO BE DEMOLISHED. SEE HATCHED AREA.
2	EXISTING ROOF STRUCTURE & ROOFING SYSTEM OVER THE GYMNASIUM AREA TO REMAIN. PROTECT. RECOAT.
3	EXISTING ROOF STRUCTURE & ROOFING SYSTEM OVER THE WEIGHT ROOM TO REMAIN. PROTECT. RECOAT.
4	EXISTING ROOFTOP UNIT. PRESERVE AND PROTECT.
5	EXISTING MECHANICAL EQUIPMENT, CURBS & FLASHING TO BE DEMOLISHED.
6	EXISTING MECHANICAL EQUIPMENT. PRESERVE AND PROTECT.
7	WALL/BEAM DEMO PATCH & REPAIR.
8	EXISTING CONCRETE PARAPET TO REMAIN.
9	EXISTING ROOF DRAINS TO REMAIN. PROTECT.

ARCHITECT 1877

ajc architects

703 east 1700 south
salt lake city, utah 84105
ph: 801.466.8818
fx: 801.466.4411
www.ajcarchitects.com

ARCHITECT / CONSULTANT

STATE OF UTAH
KENT B. RIGBY
No. 135090
05.18.2020
LICENSED ARCHITECT

OWNER INFORMATION

PROJECT DESCRIPTION

DUMKE GYMNASTICS TRAINING CENTER

1825 E. SOUTH CAMPUS DRIVE
SALT LAKE CITY, UT 84112

AHJ STAMP

SHEET NAME:

DEMOLITION ROOF PLAN

REVISIONS

MARK	DATE	DESCRIPTION

ISSUE DATA

ISSUE DATE:	10.18.21
ISSUE TYPE:	CD
DRAWN BY:	AT|DG
CHECKED BY:	KR
PROJECT#:	1877

SHEET NUMBER:

AD005

10/18/2021 4:26:40 PM S:\ajc users\taylor\Revit Local Files\21 0928 - 1877 - Dumke Womens Gymnastics Facility V20_detached_ataylorUV5V2.rvt

ALL IDEAS, DESIGNS, ARRANGEMENTS AND PLANS INDICATED OR REPRESENTED BY THIS DRAWING ARE OWNED BY AND THE PROPERTY OF AJC ARCHITECTS PC AND WERE CREATED, EVOLVED, AND DEVELOPED FOR USE ON AND IN CONNECTION WITH THE SPECIFIED PROJECT. NONE OF THE IDEAS, DESIGNS, ARRANGEMENTS OR PLANS INDICATED IN OR REPRESENTED BY THIS DRAWING, INCLUDING THE DIMENSIONAL RELATIONSHIPS AMONG THE SPACES AND ELEMENTS OF THE PROJECT AND THE PROPORTIONS THEREOF, SHALL BE USED BY OR DISCLOSED TO ANY PERSON, FIRM, OR CORPORATION FOR ANY PURPOSE WHATSOEVER WITHOUT WRITTEN CONSENT OF AJC ARCHITECTS PC. WRITTEN DIMENSIONS ON THESE DRAWINGS SHALL HAVE PRECEDENCE OVER SCALE DIMENSIONS. CONTRACTORS SHALL VERIFY AND BE RESPONSIBLE FOR ALL DIMENSIONS AND CONDITIONS ON THE JOB AND THIS OFFICE MUST BE NOTIFIED OF ANY VARIATION FROM THE DIMENSIONS AND CONDITIONS SHOWN BY THESE DRAWINGS. WARNING: REPRODUCTION HEREOF IS A CRIMINAL OFFENSE UNDER 18 U.S.C. 506. UNAUTHORIZED DISCLOSURE MAY CONSTITUTE TRADE SECRET MISAPPROPRIATION IN VIOLATION OF 17 U.S.C. § 1341 ET. SEQ. AND OTHER LAWS.

10/18/2021 4:28:21 PM S:\ajc users\ataylor\Revit Local Files\21 0928 - 1877 - Dumke Womens Gymnastics Facility V20_detached_ataylorUV5v2.rvt
ALL IDEAS, DESIGNS, ARRANGEMENTS AND PLANS INDICATED OR REPRESENTED BY THIS DRAWING ARE OWNED BY AND THE PROPERTY OF AJC ARCHITECTS PC AND WERE CREATED, EVOLVED, AND DEVELOPED FOR USE ON AND IN CONNECTION WITH THE SPECIFIED PROJECT. NONE OF SUCH IDEAS, DESIGNS, ARRANGEMENTS OR PLANS SHALL BE USED BY OR DISCLOSED TO ANY PERSON, FIRM, OR CORPORATION FOR ANY PURPOSE WHATSOEVER WITHOUT WRITTEN CONSENT OF AJC ARCHITECTS PC. WRITTEN DIMENSIONS ON THESE DRAWINGS SHALL HAVE PRECEDENCE OVER SCALE DIMENSIONS. CONTRACTORS SHALL VERIFY AND BE RESPONSIBLE FOR ALL DIMENSIONS AND CONDITIONS ON THE JOB AND THE OFFICE MUST BE NOTIFIED OF ANY VARIATION FROM THE DIMENSIONS AND CONDITIONS SHOWN BY THESE DRAWINGS. WARNING: REPRODUCTION HEREOF IS A CRIMINAL OFFENSE UNDER 18 U.S.C. 506. UNAUTHORIZED DISCLOSURE MAY CONSTITUTE TRADE SECRET MISAPPROPRIATION IN VIOLATION OF UCA 13-24-2 (1), 1 ET. SEQ. AND OTHER LAWS.
© COPYRIGHTED PROJECT. NONE OF THE IDEAS, DESIGNS, ARRANGEMENTS OF PLANS SHALL BE USED BY OR DISCLOSED TO ANY PERSON, FIRM, OR CORPORATION FOR ANY PURPOSE WHATSOEVER WITHOUT WRITTEN CONSENT OF AJC ARCHITECTS PC. WRITTEN DIMENSIONS ON THESE DRAWINGS SHALL HAVE PRECEDENCE OVER SCALE

THE UNIVERSITY OF UTAH

CODE ANALYSIS FORM – 2018 INTERNATIONAL BUILDING CODE

BUILDING IDENTIFICATION:	Dumke Gymnastics Training Center

CODE ANALYSIS COMPLETION DATE:	10.04.2021

PART 1

APPLICABLE CODE	YEAR	APPLICABLE CODE	YEAR
International Building Code (IBC)	2018	ADA (ADAAG)	2010
International Existing Building Code	2018	ICC/ANSI A117.1	2017
International Fire Code (IFC)	2018	NFPA 101 Life Safety Code (State)	2018
International Mechanical Code (IMC)	2018	NFPA 101 Life Safety Code (Federal)	2015
International Energy Conservation Code (IECC)	2018	NFPA 99 Health Care Facilities Code	2018
International Plumbing Code (IBC)	2018	FGI Health Care Guidelines	2018
National Electric Code	2020		

PART 2

Occupancy Group (Chapter 3)			(T601) Const. Type (*1)	Area (506)*5				Height (T504.3) *6		Stories (T504.4) *6		(508) Mixed Use Type (*3)	(508.4.2) *4 Area Ratio
Floor	Name	Group		Tabular NS (T506.2)	Tabular SM or S1 (T506.2)	Aa (*2)	Actual ft²	Tabul ar T504. 3 ft	Actual ft	Tabular (T504.4)	Actual		
1	Legacy Hall	A-3	IIB				426 sf						
1	Lounge	A-3	IIB				540 sf						
1	Training Room	A-3	IIB				1,035 sf						
1	Storage	A-3	IIB				79 sf						
1	Storage	A-3	IIB				44 sf						
1	A/V	A-3	IIB				22 sf						
1	Coaches Locker	A-3	IIB				100 sf						
1	Gymnasium	A-3	IIB				11,793 sf						
1	Custodial	B	IIB				82 sf						
1	Locker Room	B	IIB				402 sf						
1	Wet Area	B	IIB				262 sf						
1	Sauna	B	IIB				65 sf						
1	Storage/Laundry	B	IIB				171 sf						
1st - Floor Total:							16,352 sf						
2	Observation Deck	A-3	IIB				190 sf						
2	Multipurpose Room	A-3	IIB				1,124 sf						
2	War Room	A-3	IIB				454 sf						
2	Storage	A-3	IIB				141 sf						
2	Data	A-3	IIB				49 sf						
2	Elev/Mech	A-3	IIB				92 sf						
2	Storage	A-3	IIB				53 sf						
2	Exterior Deck	A-3	IIB				253 sf						
2	Total Business Area	B	IIB				978 sf						
2nd Floor Total:							4,286 sf						
Building Total (*2)			IIB		28,500 sf		20,638 sf	75'	27'	3	2		

*(*1) Construction Type shall be the most restrictive occupancy requirement for the entire building (508.3 & 508.4)*
*(*2) Area- Total building Area dependent on Single or Mixed Occupancy Building (506.2.1 through 506.2.4) & Frontage Increase (506.3)*
*(*3) Mixed Use - IAO=Incidental Accessory Occupancy / AO=Accessory Occupancy / SO=Separated Occupancies / NSO=Nonseparated Occupancies; gsf= gross square feet; nsf= net square feet; (E) = Existing*

*(*4) IBC Section 508.4.2: In each story, the building area shall be such that the sum of the ratios of the actual building area of each separated occupancy divided by the allowable building area of each separated occupancy shall not exceed 1.*
*(*5) 506.2.4 Mixed-occupancy, multistory buildings more than 3 stories above grade plan: Total building area shall be such that the aggregate sum of the ratios of the actual area of each story divided by the allowable area of such stories shall not exceed three for NS and four for S.*
*(*6) IBC 504.2 Mixed occupancy: In a building containing mixed occupancies in accordance with Section 508, no individual occupancy shall exceed the height and number of story limits specified in this section for the applicable occupancies.*

PART 3 - ALLOWABLE AREA DETERMINATION (506.2.1 through 506.2.4 & 506.3)

No exceptions are being taken in this project.

FRONTAGE INCREASE: If = [F/P- 0.25]W/30 = (Provide Analysis)

SINGLE-OCCUPANCY, MULTISTORY BUILDINGS (506.2.3):
Allowable Area: Aa = [At + (NS× If)] × Sa = (Provide Analysis)
Level X, X Occupancy: Aa = [At + (NS × If)] x Sa = SF

Sa = Actual number of building stories above grade plane, not to exceed three. For buildings equipped throughout with an automatic sprinkler system installed in accordance with Section 903.3.1.2, use the actual number of building stories above grade plane, not to exceed four.

MIXED-OCCUPANCY, MULTISTORY BUILDINGS (506.2.4):
Allowable Area: Aa = [At+(NS× If)] = (Provide Analysis)
Level X, X Occupancy: Aa = [Af + (NS × If)] = SF

>3 Story Bldgs: Total Bldg Area = Aggregate SUM of the Ratios (Actual Floor Area / Allowable Floor Area)
= <3 for NS and <4 for S:
Aggregate Sum of the Ratios: = X

PART 4 - GRADE PLANE ELEVATION & HEIGHT & STORIES (504)

BUILDING WALL	AVERAGE ELEVATION	GRADE PLANE ELEVATION
NORTH	26'-8"	26'-8"
SOUTH	23'-6"	22'-0"
EAST	26'-8"	26'-8"
WEST	25'-2"	22'-0"
TOTAL BUILDING G.P.E.		24'-4"

STORY	FINISHED FLOOR ELEVATION	STORY ABOVE G.P.E.	HEIGHT
BASEMENT	n/a		
1ST FLOOR	100'0"	0'-0"	0'-0"
2ND FLOOR	112'-8"	12'-8"	12'-8"
3RD FLOOR	n/a		
TOTAL BUILDING		2-STORIES	26'-8"

PART 5 - AUTOMATIC FIRE SPRINKLER (903 & T903.2.11.6)

ITEM	REFERENCE	COMMENTS
Required	Sprinkled, NFPA 13	This is a deferred submittal

PART 6 - OCCUPANCY SEPARATIONS (T508.4)

OCCUPANCY/OCCUPANCY	RATING	IBC/UL DESIGN #
This is a non-separated A-3 Building		

PART 7 - OTHER BUILDING ELEMENTS (T601 and T602)

ELEMENT	MATERIAL	RATING	IBC/UL DESIGN #
Interior Bearing Wall		0	
Interior Non-Bearing Wall	MTL Stud + Gypsum Board – this is for our mechanical shafts	1 HR	Design No. U419
Structural Frame		0	
Exterior Structural Frame		0	
Shaft Enclosure a,b	Shaftwall – Gypsum Shaft Liner + MTL Studs + Gypsum Bd – Elevator Shaft	1 HR	Design No. U499
Floor / Ceiling Assembly	Gypsum Bd. + MTL Stud – Under Stair Space	1 HR	Design No. U497
Roof / Ceiling Assembly		0	Design No. UL790 Class 'A'
Vertical Exit Enclosure a,b		0	

a. *Fire-resistance rating not less than the floor assembly penetrated (713.4) (1023.2).*
b. *2 hours where connecting four stories or more and 1 hour where connecting less than four stories, including basements. (713.4) (1023.2).*

PART 8 - EXTERIOR WALL & OPENING PROTECTION (T705.8)

WALL LOCATION	PROTECTED	UNPROTECTED	PARAPET REQ'D (705.11)
NORTH	N/A		PROVIDED/NOT REQD – EX.1
SOUTH	N/A		PROVIDED/NOT REQD – EX.1
EAST	N/A		PROVIDED/NOT REQD – EX.1
WEST	N/A		PROVIDED/NOT REQD – EX.1

PART 9 - EXIT REQUIREMENTS

FLOOR LEVEL	ROOM OCCUPANCY GROUPS	AREA	OCCUPANT LOAD FACTOR (T1004.5)	# OF OCCUPANTS (1004)	# OF EXITS (1006)	REQ'D EGRESS WIDTH (1005)	REQ'D STAIR WIDTH (1005.3)	REQ'D AISLE WIDTH (1018)	COMMON PATH OF TRAVEL DISTANCE (T1006.2.1) (Worst case)	TOTAL TRAVEL DISTANCE (1017) (Worst case)
1	Legacy Hall	426 sf	30	15	1					
1	Lounge	540 sf	15	37	2					
1	Training Room	1,035 sf	50	21	4					
1	Storage	79 sf	300	1	1					
1	Storage	44 sf	300	1	1					
1	A/V	22 sf	300	1	1					
1	Coaches Locker	100 sf	50	3	1					
1	Gymnasium	11,793 sf	50	236	4					154'
1	Custodial	82 sf	300	1	1					
1	Locker Room	402 sf	50	9	1					
1	Wet Area	262 sf	50	6	1					
1	Sauna	65 sf	50	2	1				60'	
1	Storage/Laundry	171 sf	300	1	1					
Level 1 Total:		16,352 sf		334	5	67	N/A	N/A		
2	Observation Deck	190 sf	15	13	2					
2	Multipurpose Room	1,124 sf	15	75	2					
2	War Room	454 sf	15	31	1					
2	Storage	141 sf	300	1	1					
2	Data	49 sf	300	1	1					
2	Elev/Mech	92 sf	300	1	1					
2	Storage	53 sf	300	1	1					
2	Exterior Deck	253 sf	15	17	1				33'	142'
2	Total Business Area	978	150	7	2					
Level 2 Total:		4,286 sf		147		40	30	N/A		
Building Total:		20,638 sf								

PART 10 - ADDITIONAL REQUIREMENTS

ACCESSIBLE MEANS OF EGRESS (1009):	COMPLY
ACCESSIBLE ROUTE (1104 & INTERNATIONAL EXISTING BUILDING CODE):	COMPLY
SPECIAL OCCUPANCY REQUIREMENTS (CHAPTER 4):	N/A

PLUMBING FIXTURES (T 2902.1)

TOTAL NUMBER OF REQUIRED FIXTURES:

		WATER CLOSETS			LAVATORIES			DRINKING FOUNTAINS	
OCCUPANCY	OCC. LOAD	RATIO	MEN	Urinals	RATIO	WOMEN	RATIO	MEN	WOMEN	RATIO	TOTAL
A3	456	1 PER 125	0.6	1.2	1 PER 65	3.5	1 PER 200	1.1	1.1	1 PER 1000	0.456
B	25	1 PER 25 <50 1 PER 50 >50	0.3 0.0	0.3 0.0	1 PER 25 <50 1 PER 50 >50	0.5 0.0	1 PER 40 <80 1 PER 80 >80	0.3 0.0	0.3 0.0	1 PER 100	0.25
E		1 PER 50	0.0	0.0	1 PER 50	0.0	1 PER 50	0.0	0.0	1 PER 100	0
I2 - Hosp., Ambul		1 PER ROOM			1 PER ROOM		1 PER ROOM			1 PER 100	0
I2 - Staff		1 PER 25	0.0	0.0	1 PER 25	0.0	1 PER 35	0.0	0.0	1 PER 100	0
I2 - Visitors		1 PER 75	0.0	0.0	1 PER 75	0.0	1 PER 100	0.0	0.0	1 PER 500	0
S1, S2		1 PER 100	0.0	0.0	1 PER 100	0.0	1 PER 100	0.0	0.0	1 PER 1000	0
TOTAL REQUIRED			1	2		4		2	2		1
TOTAL PROVIDED			3	0		4		3	4		1

PART 11 – BUILDING PERFORMANCE PARAMETERS:

Include a summary of building performance parameters (design temperatures for spaces, humidity control set-points, special ventilation requirements, lighting levels for spaces, etc.) with the Code Summary. Also, include structural calculations and energy calculations. Please see drawings, calcs and Basis Of Design.

PART 12 – DEFERRED SUBMITTALS, NONSTRUCTURAL COMPONENTS CHECKLIST, & SPECIAL INSPECTIONS LIST:

Provide the following information in the Code Analysis, deleting non-applicable sections.

LIST OF DEFERRED SUBMITTALS

ITEM	DRAWING REFERENCE	SPECIFICATION REFERENCE
FIRE SPRINKLER & ALARM DRAWINGS	NOTED ON GI003	
SEISMIC RESTRAINT DESIGNS OF NON-STRUCTURAL COMPONENTS FOR ALL SYSTEMS LISTED	NOTED ON GI003	
CURTAIN WALL GLAZING DESIGN	NOTED ON GI003	
RAILING AND GLASS PANEL SYSTEM	NOTED ON GI003	
ICC-ESR – SEE SPEC 075419 FOR CLARIFICATION	NOTED ON GI003	

GUIDELINES FOR SEISMIC RESTRAINT OF NONSTRUCTURAL COMPONENTS & DEFERRED SUBMITTALS

1. General Comments:
   a) These guidelines shall apply to all nonstructural components as required by the IBC 1613.1. Nonstructural components consist of architectural, mechanical and electrical components that are permanently attached to the primary structure.
   b) When a change in occupancy occurs that causes an existing building to be reclassified to a higher Occupancy Category per IBC Table 1604.5, all existing nonstructural components shall be confirmed to meet the seismic restraint requirements of Chapter 13 in ASCE 7.
   c) These guidelines define the minimum submittal requirements to obtain University of Utah approval for seismic restraint of nonstructural components. The guidelines noted herein shall not cancel or set aside more conservative requirements specified by the design professional in responsible charge.
   d) All references made to the IBC or ASCE 7 latest editions adopted by the State of Utah.
2. Checklist Requirements:
   a) All University of Utah projects shall have the "Nonstructural Component Checklist" (attached below) clearly shown on the front of the construction plans.
   b) Each item within the checklists shall have the appropriate box checked and comments shall be provided noting the particular component(s) that require seismic restraint.
   c) The "Not Required" box should only be checked if the component is exempt from requiring seismic restraint by Section 13.1.4 of ASCE 7, or if the component in question will not be provided as part of the project.
   d) If the "Deferred Submittal" box is checked, the additional requirements of Section 6 included in this handout must be met.
3. Submittal Requirements:
   a) The seismic restraint requirements for nonstructural components may be provided with the original construction documents submitted to University of Utah or may be submitted later as a deferred submittal. Whether provided with the original plans or later, the requirements of this section must be met.
   b) Seismic restraint submittals shall include construction documents meeting the requirements of Section 4 of this handout as well as supporting design information discussed in Section 5 of this handout.
4. Construction Documents:
   a) The construction documents must include seismic restraint details providing specific information relating to the materials, type, size, and locations of anchorages; materials used for bracing; attachment requirements of bracing to structure and component; and locations of transverse and longitudinal sway bracing and rod stiffeners.
   b) The construction documents must note the special inspection and testing requirements for the seismic restraint of nonstructural components per Section 13.2.7 of ASCE 7.
   c) University of Utah will accept products that have been tested and listed under the ICC Evaluation Service Program, as long as they are installed in accordance with the provisions and limitations of the ICC Listing Report.
   d) The requirements for anchorage/bracing of nonstructural components cannot be satisfied by a general reference to Design Manuals. Design professional may utilize these manuals as a basis of their design, but must provide all supporting documentation to ensure that the design conforms to the requirements of the IBC.
   e) Rod hangers shall not be used as seismic supports unless the length of the hanger from the supporting structure is 12 in. or less. Rod hangers shall not be constructed in a manner that subjects the rod to bending moments.
5. Seismic Restraint Design Requirements:
   a) Per IBC 1613.1, the seismic restraint of nonstructural components shall meet the requirements of ASCE 7. If the component in question is exempt by Section 13.1.4 of ASCE 7, a submittal noting the seismic restraint of that particular component is not required.
   b) The seismic restraint design must meet the requirements listed in Table 13.2-1 of ASCE 7. These requirements may be met by providing either a project-specific design prepared by a registered design professional, or a manufacturer's certification that the component is seismically qualified.
   c) A certificate of seismic qualification by the manufacturer must be accompanied by one of the following items:
      i) An engineered analysis conforming to the requirements of Chapter 13 of ASCE 7.
      ii) Testing by a nationally recognized testing standard procedure such as ICC-ES AC 156. The substantiated seismic design capacities shall exceed the seismic demands determined by Section 13.3 of ASCE 7.
      iii) Experience data conforming to a nationally recognized procedure. The substantiated seismic design capacities shall exceed the seismic demands determined by Section 13.3 of ASCE 7.

ARCHITECT 1877
ajc architects
703 east 1700 south
salt lake city, utah 84105
ph: 801.466.8818
fx: 801.466.4411
www.ajcarchitects.com

ARCHITECT / CONSULTANT

STATE OF UTAH
KENT B. RIGBY
No. 135099
05.18.2020
LICENSED ARCHITECT

OWNER INFORMATION

PROJECT DESCRIPTION

DUMKE GYMNASTICS TRAINING CENTER
1825 E. SOUTH CAMPUS DRIVE
SALT LAKE CITY, UT 84112

AHJ STAMP

SHEET NAME:
U OF U CODE ANALYSIS FORM

REVISIONS

MARK	DATE	DESCRIPTION

ISSUE DATA

ISSUE DATE:	10.18.21
ISSUE TYPE:	CD
DRAWN BY:	AT|DG
CHECKED BY:	KR
PROJECT#:	1877

SHEET NUMBER:
AE001.1

d) The following seismic restraint publications shall be considered “Accepted Engineering Practice”:
   i) Seismic Restraint Manual, Guidelines for Mechanical Systems (3rd Edition, published by SMACNA
   ii) Guidelines and details that have been evaluated and reported under the International Code Counc Evaluation Service Program (ICC-ES).
   iii) Seismic restraint manuals, guidelines and details that have been approved by the California Office Statewide Health Planning and Development (OSHPD) under their pre-approval program for seisr restraint systems. Approval by the University of Utah Building Official to use this reference is requi prior to proceeding with design.

6. Deferred Submittals:
   a) Deferred submittals of seismic restraint of nonstructural components must be submitted to the UNIVERSITY OF UTAH Building Official a minimum of two weeks prior to the planned installation in or to allow for plan review and forwarding to inspectors. In the event that the submittal is deficient, additic time may become necessary.
   b) Deferred submittals shall be clearly noted on the construction plans as required by IBC in Chapter 1. F to submitting to the UNIVERSITY OF UTAH Building Official, the deferred submittal must follow the protocol outlined in the section entitled “Deferred Submittals” in the IBC Chapter 1. Please note on the plans that no deferred submittal elements shall be installed until University of Utah approval has been received.
   c) If seismic restraints of nonstructural components are installed prior to receiving University of Utah app they shall not be covered or concealed until plan review and inspection approval. Further, installers ar proceeding at their own risk until plan review and inspection approval occurs.

NONSTRUCTURAL COMPONENT CHECKLIST

ITEM DESCRIPTION	NOT REQUIRED	ON CONST DOCUMENTS	DEFERRED SUBMITTAL	COMMEN
Architectural Components				
Interior nonstructural walls and partitions	☐	☒	☐	
Cantilever elements (i.e. parapets, etc)	☒	☐	☐	
Exterior nonstructural wall elements	☒	☐	☐	
Veneer	☒	☐	☐	
Penthouses	☒	☐	☐	
Ceilings (i.e. suspended grid or hard-lid)	☐	☒	☐	
Cabinets (i.e. storage cabinets, equip, etc)	☐	☒	☐	
Access floors	☒	☐	☐	
Storage racks	☒	☐	☐	
Appendages & ornamentations	☒	☐	☐	
Signs & billboards	☒	☐	☐	
Other:	☒	☐	☐	
Other:	☒	☐	☐	
MEP Components			☐	
Fire sprinklers	☐	☐	☒	
Mechanical equipment (i.e. HVAC, fans, air handler, boilers, furnaces, tanks, chillers, water heaters, evaporators, engines, turbines, pumps, compressors, MFR equipment, etc.)	☐	☒	☐	
Electrical equipment (i.e. generators, batteries, inverters, transformers, MCC, panel Boards, switch gears, cabinets, etc.)	☐	☒	☐	
Elevator & escalator components	☐	☒	☐	
Communication equipment, computers, instrumentation, and controls	☐	☒	☐	
Roof-mounted chimneys stacks, cooling & electrical towers	☒	☐	☐	
Lighting fixtures	☐	☒	☐	
Vibration isolated components	☐	☒	☐	
Piping & conduit systems	☐	☒	☐	
Ductwork including in-line components	☐	☒	☐	
Conveyors	☒	☐	☐	
Cable trays	☐	☒	☐	
Seismic restraint design of nonstructural mechanical, electrical, plumbing components	☐	☐	☒	
Other:	☒	☐	☐	
Other:	☒	☐	☐	

SPECIAL INSPECTIONS LIST

Special Inspections for the project must be listed below in accordance with the provisions of IBC 1704 and for miscellaneous areas. Indicate required Special inspections for project by checking the appropriate boxes and provide specific instructions as to the inspection requirements and the expectations of the architect, engineer, and owner:

FABRICATORS (IBC 1704.2.5)

Approved Fabricator	Fabricators Name:
Unapproved Fabricator	Fabricators Name:
In-plant inspections	
Steel Construction ☐	Welding ☐ Details ☐

STEEL (IBC 1705.2)

ITEM (IBC REFERENCE)	CONTINUOUS	PERIODIC	REFERENCED STANDARD
Structural Steel (1705.2.1)	☐	☒	AISC 360
Cold-formed Steel Deck (1705.2.2)	☒	☒	SDI QA/QC
Open-web Steel Joists & Joist Girders (1705.2.3)			
1. Installation of open-web steel joists and joist girders.			
a. End connections – welding or bolted.		☒	SJI specifications, Section 2207.1.
b. Bridging – horizontal or diagonal.			
1. Standard bridging.		☒	SJI specifications Section 2207.1.
2. Bridging that differs from the SJI Specifications listed in Section 2207.1.		☐	
Cold-formed Steel Trusses Spanning 60ft or Greater (1705.2.4)	☐	☐	

CONCRETE CONSTRUCTION (1705.3 & T1705.3)

ITEM (IBC REFERENCE)	CONTINUOUS	PERIODIC	REFERENCED STANDARD
Materials (1705.3.2)			
1. Inspect reinforcement, including prestressing tendons, and verify placement.		☐	ACI 318 Ch. 20, 25.2, 25.3, 26.6.1-26.6.3 (IBC 1908.4)
2. Reinforcing bar welding: a. Verify weldability of reinforcing bars other than ASTM A 706; b. Inspect single-pass fillet welds, maximum 5/16”; and c. Inspect all other welds.	☐	☐ ☐	AWS D1.4 ACI 318: 26.6.4
3. Inspection of anchors cast in concrete.		☐	ACI 318: 17.8.2
4. Inspection of anchors post-installed in hardened concrete members. a. Adhesive anchors installed in horizontally or upwardly inclined orientations to resist sustained tension loads. b. Mechanical anchors and adhesive anchors not defined in 4.a	☐	☐	ACI 318: 17.8.2.4 ACI 318: 17.8.2
5. Verifying use of required design mix.		☐	ACI 318: Ch. 19, 26.4.3, 26.4.4 (IBC 1904.1, 1904.2, 1908.2, 1908.3)
6. Prior to concrete placement, fabricate specimens for strength tests, perform slump and air content tests, and determine the temperature of the concrete.	☐		ASTM C 172 ASTM C 31 ACI 318: 26.5, 26.12 (IBC 1908.10)
7. Inspect concrete and shotcrete placement for proper application techniques.	☐		ACI 318: 26.5 (IBC 1908.6, 1908.7, 1908.8)
8. Verify maintenance of specified curing temperature and techniques.		☐	ACI 318: 26.5.3-26.5.5 (IBC 1908.9)
9. Inspection of prestressed concrete: a) Application of prestressing forces. b) Grouting of bonded prestressing tendons in the seismic force-resisting system.	☐		ACI 318: 26.10
10. Inspect erection of precast concrete members.		☐	ACI 318: Ch. 26.9
11. Verify in-situ concrete strength, prior to stressing of tendons in post-tensioned concrete and prior to removal of shores and forms from beams and structural slabs.		☐	ACI 318: 26.11.2
12. Inspect formwork for shape, location and dimensions of the concrete member being formed.		☐	ACI 318: 26.11.1.2(b)

MASONRY CONSTRUCTION (1705.4)

ITEM (IBC REFERENCE)	INSPECTION REQ'D		REFERENCED STANDARD
Masonry Construction			TMS 402/ACI 530 ASCE 5 TMS 602 ACI 530.1/ASCE 6
Empirical masonry – Cat. IV (1705.4.1)	☐		
Vertical masonry foundation elements (1705.4.2)	☐		

WOOD CONSTRUCTION (1705.5)

ITEM (IBC REFERENCE)	INSPECTION REQ'D		REFERENCED STANDARD
High-load diaphragms (1705.5.1)	☐		
Metal-plate-connected wood trusses spanning 60 feet or greater (1705.5.2)	☐		

SOILS CONSTRUCTION (1705.6)

ITEM (IBC REFERENCE)	CONTINUOUS	PERIODIC	REFERENCED STANDARD
Verify materials below shallow foundations are adequate to achieve the design bearing capacity.		☐	
Verify excavations are extended to proper depth and have reached proper material.		☐	
Perform classification and testing of compacted fill materials.		☐	
Verify use of proper materials, densities and lift thicknesses during placement and compaction of compacted fill.	☐		
Prior to placement of compacted fill, observe subgrade and verify that site has been prepared properly.		☐	

DRIVEN DEEP FOUNDATIONS (1705.7)

ITEM (IBC REFERENCE)	CONTINUOUS	PERIODIC	REFERENCED STANDARD
Verify element materials, sizes and lengths comply with the requirements.	☐		
Determine capacities of test elements and conduct additional load tests, as required.	☐		
Inspect driving operations and maintain complete and accurate records for each element.	☐		
Verify placement locations and plumbness, confirm types and size of hammer, record number of blows per foot of penetration, determine required penetrations to achieve design capacity, record tip and butt elevations and document any damage to foundation element.	☐		
For steel elements, perform additional inspections in accordance with Section 1705.2.		☐	
For concrete elements and concrete-filled elements, perform additional inspections in accordance with Section 1705.3.		☐	
For specialty elements, perform additional inspections as determined by the registered design professional in responsible charge.		☐	

CAST-IN-PLACE DEEP FOUNDATIONS (1705.8)

ITEM (IBC REFERENCE)	CONTINUOUS	PERIODIC	REFERENCED STANDARD
Inspect drilling operations and maintain complete and accurate records for each element.	☐		
Verify placement locations and plumbness, confirm element diameters, bell diameters (if applicable), lengths, embedment into bedrock (if applicable) and adequate end-bearing strata capacity. Record concrete or grout volumes.	☐		
For concrete elements, perform additional inspections in accordance with section 1705.3.	☐		

HELICAL PILE FOUNDATIONS (1705.9)

ITEM (IBC REFERENCE)	CONTINUOUS	PERIODIC	REFERENCED STANDARD
Installation	☐		
Verify records of: Installation equipment used, pile dimensions, tip elevations, final depth, final installation torque and other pertinent installation data as required by the *registered design professional in responsible charge*.	☐		

SPECIAL INSPECTIONS FOR WIND REQUIREMENTS (1705.11)

ITEM (IBC REFERENCE)	CONTINUOUS	PERIODIC	REFERENCED STANDARD
Structural wood (1705.11.1)	☐		
Cold-formed steel framing (1705.11.2)		☐	
Wind-resisting components (1705.11.3)		☐	

SPECIAL INSPECTIONS FOR SEISMIC RESISTANCE (1705.12)

ITEM (IBC REFERENCE)	CONTINUOUS	PERIODIC	REFERENCED STANDARD
Structural steel (1705.12.1)	☐	☐	AISC 341
Structural wood (1705.12.2) a. Continuous special inspection shall be required during field gluing operations of elements of the seismic force-resisting system. b. Periodic special inspection shall be required for nailing, bolting, anchoring and other fastening of elements of the seismic force-resisting system, including wood shear walls, wood diaphragms, drag struts, braces, shear panels and hold-downs.	☐	☐	
Cold-formed steel framing (1705.12.3)	☐	☐	
Designated seismic systems (1705.12.4)	☐	☐	
Architectural components (1705.12.5)		☐	
Access floors (1705.12.5.1)		☐	
Plumbing, Mechanical & electrical (1705.12.6)		☐	
Storage racks (1705.12.7)		☐	
Seismic isolation systems (1705.12.8)		☐	
Cold-formed steel special bolted moment frames (1705.12.9).		☐	

TESTING FOR SEISMIC RESISTANCE (1705.13)

ITEM (IBC REFERENCE)	TESTING REQ'D		REFERENCED STANDARD
Structural steel (1705.13.1)	☐		
1705.13.2 Nonstructural components (1705.13.2)	☐		
Seismic isolation systems (1705.13.4)	☐		

SPRAYED FIRE-RESISTANT MATERIALS (1705.14)

ITEM (IBC REFERENCE)	CONTINUOUS	PERIODIC	REFERENCED STANDARD
Physical & visual tests (1705.14.1)		☐	
Structural member surface conditions (1705.14.2)		☐	
Material application (1705.14.3)		☐	
Material thickness (1705.14.4)		☐	
Material density (1705.14.5)		☐	
Bonding strength (1705.14.6)		☐	

MASTIC & INTUMESCENT FIRE-RESISTANT COATINGS (1705.15)

ITEM (IBC REFERENCE)	CONTINUOUS	PERIODIC	REFERENCED STANDARD
Material & Installation	☐	☐	

EXTERIOR INSULATION & FINISH SYSTEM (EIFS) (1705.16)

ITEM (IBC REFERENCE)	CONTINUOUS	PERIODIC	REFERENCED STANDARD
Material & Installation		☐	

FIRE-RESISTANT PENETRATIONS & JOINTS (1705.17)

ITEM (IBC REFERENCE)	CONTINUOUS	PERIODIC	REFERENCED STANDARD
Penetration firestops (1705.17.1)		☐	
Fire-resistant joint systems (1705.17.2)		☐	

SMOKE CONTROL (1705.18)

ITEM (IBC REFERENCE)	CONTINUOUS	PERIODIC	REFERENCED STANDARD
Material & Installation		☐	

MISCELLANEOUS AREAS
(These areas are recommended by Architect/Engineer and approved by University of Utah Building Official)

ITEM (IBC REFERENCE)	CONTINUOUS	PERIODIC	REFERENCED STANDARD
Suspended ceiling grid clips	☐	☒	
Suspended ceiling wire spacing (seismic)	☐	☒	
Soils backfill (specify locations and frequency)	☐	☐	
Soils for curb and gutter (specify locations and frequency)	☐	☐	
Soils for parking lots (specify locations and frequency)	☐	☐	
Soils for utility trench backfill	☐	☐	
Reinforcement for slab on grade sidewalks and drive approaches (specify locations and frequency)	☐	☐	
Reinforcement for interior slab on grade (specify locations and frequency)	☐	☐	
Concrete testing for slab on grade sidewalks and drive approaches (specify locations and frequency)	☐	☐	
Concrete testing for interior slab on grade (specify locations and frequency)	☐	☐	
Masonry veneer (specify locations and frequency)	☐	☐	
Asphalt inspection (specify locations and frequency)	☐	☐	
Asphalt testing (specify locations and frequency)	☐	☐	
Inspection of seismic resistance (specify locations and frequency)	☐	☐	
Steam and water line welding (specify locations and frequency)	☐	☐	
Seismic supports for duct work and sealing of joints for duct work	☐	☒	
Seismic supports for electrical raceways, cable trays and lights	☐	☒	
Seismic supports for plumbing lines including gas, water, steam and condensation	☐	☒	
Seismic bracing for mechanical units both on slab and suspended	☐	☒	

SPECIAL INSPECTORS SHALL:

- Be approved by the Building Official prior to performing any duties;
- Provide proof of licensure as a special inspector by the State of Utah for each type of inspection;
- Inspection reports are to meet the requirements of IBC 1704.2.4 and University of Utah standards;
- Inspection reports are to be submitted to the code consultant, architect, project manager, and the University of Utah Building Official within 48 hrs. of inspections;
- A final inspection report shall be submitted following completion of the project documenting the types of special inspections performed and a statement indicating that the structure is in compliance with the drawings, specifications and applicable codes. IBC 1704.2.4

ARRANGEMENTS OF PLANS SHALL BE USED BY OR DISCLOSED TO ANY PERSON, FIRM, OR CORPORATION FOR ANY PURPOSE WHATSOEVER WITHOUT WRITTEN CONSENT OF AJC ARCHITECTS PC. AND WERE CREATED, EVOLVED, AND DEVELOPED FOR USE ON AND IN CONNECTION WITH THE SPECIFIED PROJECT. NONE OF THE IDEAS, DESIGNS, ARRANGEMENTS OR PLANS SHALL BE USED BY OR DISCLOSED TO ANY PERSON, FIRM, OR CORPORATION FOR ANY PURPOSE WHATSOEVER WITHOUT THE PRIOR WRITTEN CONSENT OF AJC ARCHITECTS PC. AND WERE CREATED, EVOLVED, AND DEVELOPED FOR USE ON AND IN CONNECTION WITH THE SPECIFIED PROJECT. NONE OF THE IDEAS, DESIGNS, ARRANGEMENTS OR PLANS INDICATED OR REPRESENTED BY THIS DRAWING ARE OWNED BY, AND THE PROPERTY OF AJC ARCHITECTS PC. AND WERE CREATED, EVOLVED, AND DEVELOPED FOR USE ON AND IN CONNECTION WITH THE SPECIFIED PROJECT. NONE OF THE IDEAS, DESIGNS, ARRANGEMENTS OR PLANS INDICATED OR REPRESENTED BY THIS DRAWING ARE OWNED BY, AND THE PROPERTY OF AJC ARCHITECTS PC. AND WERE CREATED, EVOLVED, AND DEVELOPED FOR USE ON AND IN CONNECTION WITH THE SPECIFIED PROJECT. NONE OF THE IDEAS, DESIGNS, ARRANGEMENTS OR PLANS SHALL BE USED BY OR DISCLOSED TO ANY PERSON, FIRM, OR CORPORATION FOR ANY PURPOSE WHATSOEVER WITHOUT WRITTEN CONSENT

10/18/2021 4:28:27 PM S:\ajc users\ataylor\Revit Local Files\21 0928 - 1877 - Dumke Womens Gymnastics Facility V20_detached_ataylorUV5V2.rvt

ALL IDEAS, DESIGNS, ARRANGEMENTS AND PLANS INDICATED OR REPRESENTED BY THIS DRAWING ARE OWNED BY AND THE PROPERTY OF AJC ARCHITECTS PC AND WERE CREATED, EVOLVED, AND DEVELOPED FOR USE ON AND IN CONNECTION WITH THE SPECIFIED PROJECT. NONE OF THE IDEAS, DESIGNS, ARRANGEMENTS OR PLANS SHALL BE USED BY OR DISCLOSED TO ANY PERSON, FIRM, OR CORPORATION FOR ANY PURPOSE WHATSOEVER WITHOUT WRITTEN CONSENT OF AJC ARCHITECTS PC. WRITTEN DIMENSIONS ON THESE DRAWINGS SHALL HAVE PRECEDENCE OVER SCALE DIMENSIONS. CONTRACTORS SHALL VERIFY AND BE RESPONSIBLE FOR ALL DIMENSIONS AND CONDITIONS ON THE JOB AND THIS OFFICE MUST BE NOTIFIED OF ANY VARIATION FROM THE DIMENSIONS AND CONDITIONS SHOWN BY THESE DRAWINGS. WARNING: REPRODUCTION HEREOF IS A CRIMINAL OFFENSE UNDER 18 U.S.C. SEC. 506. UNAUTHORIZED DISCLOSURE MAY CONSTITUTE TRADE SECRET MISAPPROPRIATION IN VIOLATION OF I.C.24-2-31-1 ET. SEQ. AND OTHER LAWS.

IECC REQUIREMENTS:

TABLE C402.1.3
OPAQUE THERMAL ENVELOPE INSULATION COMPONENT MINIMUM REQUIREMENTS, R-VALUE METHOD[a, i]

CLIMATE ZONE	1		2		3		4 EXCEPT MARINE		5 AND MARINE 4		6		7		8	
	All other	Group R	All other	Group R	All other	Group R	All other	Group R	All other	Group R	All other	Group R	All other	Group R	All other	Group R
Roofs																
Insulation entirely above roof deck	R-20ci	R-25ci	R-25ci	R-25ci	R-25ci	R-25ci	R-30ci	R-30ci	R-30ci	R-30ci	R-30ci	R-30ci	R-35ci	R-35ci	R-35ci	R-35ci
Metal buildings[b]	R-19 + R-11 LS	R-19 + R-11 LS	R-19 + R11 LS	R-19 + R-11 LS	R-19 + R-11 LS	R-19 + R-11 LS	R-19 + R-11 LS	R-19 + R-11 LS	R-19 + R-11 LS	R-19 + R-11 LS	R-25 + R-11 LS	R-25 + R-11 LS	R-30 + R-11 LS	R-30 + R-11 LS	R-30 + R-11 LS	R-30 + R-11 LS
Attic and other	R-38	R-38	R-38	R-38	R-38	R-38	R-38	R-38	R-38	R-49	R-49	R-49	R-49	R-49	R-49	R-49
Walls, above grade																
Mass[g]	R-5.7ci[c]	R-5.7ci[c]	R-5.7ci[c]	R-7.6ci	R-7.6ci	R-9.5ci	R-9.5ci	R-11.4ci	R-11.4ci	R-13.3ci	R-13.3ci	R-15.2ci	R-15.2ci	R-15.2ci	R-25ci	R-25ci
Metal building	R-13+ R-6.5ci	R-13 + R-6.5ci	R13 + R-6.5ci	R-13 + R-13ci	R-13 + R-6.5ci	R-13 + R-13ci	R-13 + R-13ci	R-13 + R-13ci	R-13 + R-13ci	R-13 + R-13ci	R-13 + R-13ci	R-13 + R-13ci	R-13 + R-13ci	R-13+ R-19.5ci	R-13 + R-13ci	R-13+ R-19.5ci
Metal framed	R-13 + R-5ci	R-13 + R-5ci	R-13 + R-5ci	R-13 + R-7.5ci	R-13 + R-7.5ci	R-13 + R-7.5ci	R-13 + R-7.5ci	R-13 + R-7.5ci	R-13 + R-7.5ci	R-13 + R-7.5ci	R-13 + R-7.5ci	R-13 + R-7.5ci	R-13 + R-7.5ci	R-13 + R-15.6ci	R-13 + R-7.5ci	R-13+ R17.5ci
Wood framed and other	R-13 + R-3.8ci or R-20	R-13 + R-3.8ci or R-20	R-13 + R-3.8ci or R-20	R-13 + R-3.8ci or R-20	R-13 + R-3.8ci or R-20	R-13 + R-3.8ci or R-20	R-13 + R-3.8ci or R-20	R-13 + R-3.8ci or R-20	R-13 + R-3.8ci or R-20	R-13 + R-7.5ci or R-20 + R-3.8ci	R-13 + R-7.5ci or R-20 + R-3.8ci	R-13 + R-7.5ci or R-20 + R-3.8ci	R-13 + R-7.5ci or R-20 + R-3.8ci	R-13 + R-7.5ci or R-20 + R-3.8ci	R13 + R-15.6ci or R-20 + R-10ci	R13 + R-15.6ci or R-20 + R-10ci
Walls, below grade																
Below-grade wall[d]	NR	NR	NR	NR	NR	NR	R-7.5ci	R-7.5ci	R-7.5ci	R-7.5ci	R-7.5ci	R-7.5ci	R-10ci	R-10ci	R-10ci	R-12.5ci
Floors																
Mass[e]	NR	NR	R-6.3ci	R-8.3ci	R-10ci	R-10ci	R-10ci	R-10.4ci	R-10ci	R-12.5ci	R-12.5ci	R-12.5ci	R-15ci	R-16.7ci	R-15ci	R-16.7ci
Joist/framing	NR	NR	R-30	R-30	R-30	R-30	R-30	R-30	R-30	R-30	R-30	R-30[f]	R-30[f]	R-30[f]	R-30[f]	R-30[f]
Slab-on-grade floors																
Unheated slabs	NR	NR	NR	NR	NR	NR	R-10 for 24" below	R-10 for 24" below	R-10 for 24" below	R-10 for 24" below	R-10 for 24" below	R-15 for 24" below	R-15 for 24" below	R-15 for 24" below	R-15 for 24" below	R-20 for 24" below
Heated slabs[h]	R-7.5 for 12" below + R-5 full slab	R-7.5 for 12" below + R-5 full slab	R-7.5 for 12" below + R-5 full slab	R-7.5 for 12" below + R-5 full slab	R-10 for 24" below + R-5 full slab	R-10 for 24" below + R-5 full slab	R-15 for 24" below + R-5 full slab	R-15 for 24" below + R-5 full slab	R-15 for 36" below + R-5 full slab	R-15 for 36" below + R-5 full slab	R-15 for 36" below + R-5 full slab	R-20 for 48" below + R-5 full slab	R-20 for 48" below + R-5 full slab	R-20 for 48" below + R-5 full slab	R-20 for 48" below + R-5 full slab	R-20 for 48" below + R-5 full slab
Opaque doors																
Nonswinging	R-4.75	R-4.75	R-4.75	R-4.75	R-4.75	R-4.75	R-4.75	R-4.75	R-4.75	R-4.75	R-4.75	R-4.75	R-4.75	R-4.75	R-4.75	R-4.75

For SI: 1 inch = 25.4 mm, 1 pound per square foot = 4.88 kg/m², 1 pound per cubic foot = 16 kg/m³.

ci = Continuous insulation, NR = No Requirement, LS = Liner System.

a. Assembly descriptions can be found in ANSI/ASHRAE/IESNA Appendix A.
b. Where using R-value compliance method, a thermal spacer block shall be provided, otherwise use the U-factor compliance method in Table C402.1.4.
c. R-5.7ci is allowed to be substituted with concrete block walls complying with ASTM C90, ungrouted or partially grouted at 32 inches or less on center vertically and 48 inches or less on center horizontally, with ungrouted cores filled with materials having a maximum thermal conductivity of 0.44 Btu-in/h-f²·°F.
d. Where heated slabs are below grade, below-grade walls shall comply with the exterior insulation requirements for heated slabs.
e. "Mass floors" shall be in accordance with Section C402.2.3.
f. Steel floor joist systems shall be insulated to R-38.
g. "Mass walls" shall be in accordance with Section C402.2.2.
h. The first value is for perimeter insulation and the second value is for slab insulation. Perimeter insulation is not required to extend below the bottom of the slab.
i. Not applicable to garage doors. See Table C402.1.4.

TABLE C402.1.4
OPAQUE THERMAL ENVELOPE ASSEMBLY MAXIMUM REQUIREMENTS, *U*-FACTOR METHOD[a, b]

CLIMATE ZONE	1		2		3		4 EXCEPT MARINE		5 AND MARINE 4		6		7		8	
	All other	Group R	All other	Group R	All other	Group R	All other	Group R	All other	Group R	All other	Group R	All other	Group R	All other	Group R
Roofs																
Insulation entirely above roof deck	U-0.048	U-0.039	U-0.039	U-0.039	U-0.039	U-0.039	U-0.032	U-0.032	U-0.032	U-0.032	U-0.032	U-0.032	U-0.028	U-0.028	U-0.028	U-0.028
Metal buildings	U-0.044	U-0.035	U-0.035	U-0.035	U-0.035	U-0.035	U-0.035	U-0.035	U-0.035	U-0.035	U-0.031	U-0.031	U-0.029	U-0.029	U-0.029	U-0.029
Attic and other	U-0.027	U-0.027	U-0.027	U-0.027	U-0.027	U-0.027	U-0.027	U-0.027	U-0.027	U-0.021	U-0.021	U-0.021	U-0.021	U-0.021	U-0.021	U-0.021
Walls, above grade																
Mass[g]	U-0.151	U-0.151	U-0.151	U-0.123	U-0.123	U-0.104	U-0.104	U-0.090	U-0.090	U-0.080	U-0.080	U-0.071	U-0.071	U-0.071	U-0.061	U-0.061
Metal building	U-0.079	U-0.079	U-0.079	U-0.079	U-0.079	U-0.052	U-0.052	U-0.052	U-0.052	U-0.052	U-0.052	U-0.052	U-0.052	U-0.039	U-0.052	U-0.039
Metal framed	U-0.077	U-0.077	U-0.077	U-0.064	U-0.064	U-0.064	U-0.064	U-0.064	U-0.064	U-0.064	U-0.064	U-0.064	U-0.064	U-0.052	U-0.064	U-0.045
Wood framed and other[c]	U-0.064	U-0.064	U-0.064	U-0.064	U-0.064	U-0.064	U-0.064	U-0.064	U-0.064	U-0.064	U-0.051	U-0.051	U-0.051	U-0.051	U-0.036	U-0.036
Walls, below grade																
Below-grade wall[c]	C-1.140[e]	C-1.140[e]	C-1.140[e]	C-1.140[e]	C-1.140[e]	C-1.140[e]	C-0.119	C-0.119	C-0.119	C-0.119	C-0.119	C-0.119	C-0.092	C-0.092	C-0.092	C-0.092
Floors																
Mass[d]	U-0.322[e]	U-0.322[e]	U-0.107	U-0.087	U-0.076	U-0.076	U-0.076	U-0.074	U-0.074	U-0.064	U-0.064	U-0.064	U-0.055	U-0.051	U-0.055	U-0.051
Joist/framing	U-0.066[e]	U-0.066[e]	U-0.033	U-0.033	U-0.033	U-0.033	U-0.033	U-0.033	U-0.033	U-0.033	U-0.033	U-0.033	U-0.033	U-0.033	U-0.033	U-0.033
Slab-on-grade floors																
Unheated slabs	F-0.73[e]	F-0.73[e]	F-0.73[e]	F-0.73[e]	F-0.73[e]	F-0.73[e]	F-0.54	F-0.54	F-0.54	F-0.54	F-0.54	F-0.52	F-0.40	F-0.40	F-0.40	F-0.40
Heated slabs[f]	F-1.02 0.74	F-1.02 0.74	F-1.02 0.74	F-1.02 0.74	F-0.90 0.74	F-0.90 0.74	F-0.86 0.64	F-0.86 0.64	F-0.79 0.64	F-0.79 0.64	F-0.79 0.55	F-0.69 0.55	F-0.69 0.55	F-0.69 0.55	F-0.69 0.55	F-0.69 0.55
Opaque doors																
Swinging door	U-0.61	U-0.61	U-0.61	U-0.61	U-0.61	U-0.61	U-0.61	U-0.61	U-0.37	U-0.37	U-0.37	U-0.37	U-0.37	U-0.37	U-0.37	U-0.37
Garage door <14% glazing	U-0.31	U-0.31	U-0.31	U-0.31	U-0.31	U-0.31	U-0.31	U-0.31	U-0.31	U-0.31	U-0.31	U-0.31	U-0.31	U-0.31	U-0.31	U-0.31

For SI: 1 pound per square foot = 4.88 kg/m², 1 pound per cubic foot = 16 kg/m³.

ci = Continuous insulation, NR = No Requirement, LS = Liner System.

a. Where assembly U-factors, C-factors, and F-factors are established in ANSI/ASHRAE/IESNA 90.1 Appendix A, such opaque assemblies shall be a compliance alternative where those values meet the criteria of this table, and provided that the construction, excluding the cladding system on walls, complies with the appropriate construction details from ANSI/ASHRAE/ISNEA 90.1 Appendix A.
b. Where U-factors have been established by testing in accordance with ASTM C1363, such opaque assemblies shall be a compliance alternative where those values meet the criteria of this table. The R-value of continuous insulation shall be permitted to be added to or subtracted from the original tested design.
c. Where heated slabs are below grade, below-grade walls shall comply with the U-factor requirements for above-grade mass walls.
d. "Mass floors" shall be in accordance with Section C402.2.3.
e. These C-, F- and U-factors are based on assemblies that are not required to contain insulation.
f. The first value is for perimeter insulation and the second value is for full slab insulation.
g. "Mass walls" shall be in accordance with Section C402.2.2.

TABLE C402.4
BUILDING ENVELOPE FENESTRATION MAXIMUM *U*-FACTOR AND SHGC REQUIREMENTS

CLIMATE ZONE	1		2		3		4 EXCEPT MARINE		5 AND MARINE 4		6		7		8	
Vertical fenestration																
***U*-factor**																
Fixed fenestration	0.50		0.50		0.46		0.38		0.38		0.36		0.29		0.29	
Operable fenestration	0.65		0.65		0.60		0.45		0.45		0.43		0.37		0.37	
Entrance doors	1.10		0.83		0.77		0.77		0.77		0.77		0.77		0.77	
SHGC																
Orientation[a]	SEW	N	SEW	N	SEW	N	SEW	N	SEW	N	SEW	N	SEW	N	SEW	N
PF < 0.2	0.25	0.33	0.25	0.33	0.25	0.33	0.36	0.48	0.38	0.51	0.40	0.53	0.45	NR	0.45	N
0.2 ≤ PF < 0.5	0.30	0.37	0.30	0.37	0.30	0.37	0.43	0.53	0.46	0.56	0.48	0.58	NR	NR	NR	NR
PF ≥ 0.5	0.40	0.40	0.40	0.40	0.40	0.40	0.58	0.58	0.61	0.61	0.64	0.64	NR	NR	NR	NR
Skylights																
U-factor	0.75		0.65		0.55		0.50		0.50		0.50		0.50		0.50	
SHGC	0.35		0.35		0.35		0.40		0.40		0.40		NR		NR	

NR = No Requirement, PF = Projection Factor.

a. "N" indicates vertical fenestration oriented within 45 degrees of true north. "SEW" indicates orientations other than "N." For buildings in the southern hemisphere, reverse south and north. Buildings located at less than 23.5 degrees latitude shall use SEW for all orientations.

CODE SUMMARY:

APPLICABLE CODES:

INTERNATIONAL BUILDING CODE (IBC)	2018
INTERNATIONAL FIRE CODE (IFC)	2018
INTERNATIONAL MECHANICAL CODE (IMC)	2018
INTERNATIONAL PLUMBING CODE (IPC)	2018
NATIONAL ELECTRICAL CODE (NEC)	2020
INTERNATIONAL FUEL GAS CODE	2018
INTERNATIONAL ENERGY CONSERVATION CODE	2018
INTERNATIONAL EXISTING BUILDING CODE	2018
ICC ANSI A117.1	2009
ADA (ADAAG)	2010
UTAH AMENDMENTS, TITLE 15A	2018

OCCUPANCY CLASSIFICATION – IBC CHAPTER 3
'A-3' - GYMNASTICS
'B' - OFFICE
NON-SEPARATED OCCUPANCIES

TYPE OF CONSTRUCTION – IBC CHAPTER 6
TYPE II-B, (SPRINKLED,NFPA 13)

THIS BUILDING IS A NON-SEPARATED A-3 OCCUPANCY. ALLOWABLE AREAS AND HEIGHTS ARE BASED ON A-3 OCCUPANCY, TYPE II-B CONSTRUCTION WITH NFPA TYPE 13 SPRINKLER SYSTEM.

ALLOWABLE BUILDING HEIGHT - IBC CHAPTER 5, TABLE 504.3
ALLOWED = 75 FEET
ACTUAL = 27 FEET +/-

ALLOWABLE BUILDING STORIES ABOVE GRADE PLANE - IBC CHAPTER 5, TABLE 504.4
ALLOWED = 3 STORIES
ACTUAL = 2 STORIES

ALLOWABLE AREA FACTOR - IBC CHAPTER 5, TABLE 506.2
ALLOWED = 28,500 S.F./FLOOR
ACTUAL = 16,352 GROSS S.F. (LEVEL 01)
4,286 GROSS S.F. (LEVEL 02)
20,638 GROSS S.F. TOTAL

OCCUPANCY SEPARATIONS - IBC TABLE 508.4 (IBC SECTION 508.3.3)
'A' OCC. FROM 'B' OCC = 0 HOUR (NON-SEPARATED)

FIRE RESISTIVE REQUIREMENTS – IBC CHAPTER 6, TABLE 601

STRUCTURAL FRAME	0 HOUR RATING
EXTERIOR	0 HOUR RATING
INTERIOR	0 HOUR RATING
EXTERIOR NONBEARING WALLS	0 HOUR RATING
INTERIOR NONBEARING WALLS	0 HOUR RATING
FLOOR (INCLUDING SUPPORTING BEAM AND JOISTS)	0 HOUR RATING
ROOF (INCLUDING SUPPORTING BEAM AND JOISTS)	0 HOUR RATING
CORRIDOR (SPRINKLED)	0 HOUR RATING (TABLE 1018.1)

FIRE ALARM AND DETECTION SYSTEMS
A FIRE ALARM SYSTEM WILL BE PROVIDED PER IBC 907.2.1.

ENCLOSURES UNDER INTERIOR STAIRWAYS - IBC SECTION 1011.7.3
PROTECTED BY 1-HOUR FIRE-RESISTANCE-RATED CONSTRUCTION.

CORRIDORS - IBC TABLE 1020.1
'A-3' OR 'B' OCCUPANCY = 0 HOUR RATING, SPRINKLED

TRAVEL DISTANCE – IBC SECTION 1017.2
'A' OCCUPANCY = 250 FEET
'B' OCCUPANCY = 300 FEET
ACTUAL (WORST CASE) = 142 FEET

COMMON PATH OF EGRESS TRAVEL - IBC TABLE 1006.3.2
'A' OCCUPANCY = 75 FEET
'B' OCCUPANCY = 100 FEET

NUMBER OF REQUIRED EXITS – IBC TABLE 1006.3.2(2)
2 EXITS REQUIRED WHEN OCCUPANCY IS GREATER THAN 49.

DEAD END CORRIDORS - IBC SECTION 1020.4 EXCEPTION 2
'A' OCCUPANCY = 20 FEET
'B' OCCUPANCY = 50 FEET WITH FIRE SUPPRESSION

MINIMUM CORRIDOR WIDTHS - IBC TABLE 1020.2
'A' OR 'B' OCCUPANCY = 44 INCHES MIN.

EXIT SEPARATION – IBC SECTION 1007.1.1 EXCEPTION 2
SEPARATION OF EXITS SHALL BE 1/3 THE LENGTH OF THE MAXIMUM DIAGONAL DIMENSION.

OCCUPANCY LOADS – IBC CHAPTER 10, TABLE 1004.1.2

DESCRIPTION OF OCCUPANCY	OCCUPANCY LOAD FACTOR (SF/OCCUPANT)
STORAGE, UTILITY SPACES, ETC.	300 GROSS
BUSINESS AREAS (OFFICES)	100 GROSS
CONFERENCE ROOM, ASSEMBLY ROOM, LOUNGE	15 NET
LOCKER ROOM, TRAINING, GYMNASIUM	50 GROSS
EXHIBIT	30 NET

INCIDENTAL USES - IBC TABLE 509
LAUNDRY OVER 100 SQ FT = SPRINKLED

STAIRS / RAMPS - IBC CHAPTER 10
- SECTION 1009.3; EXCEPTION 5 – AREA OF REFUGE NOT REQUIRED – STAIR IS NOT A MEANS OF EGRESS.
- SECTION 1011.5.2 – STAIR RISER HEIGHT SHALL BE 7 INCHES MAXIMUM AND 4 INCHES MINIMUM. THE STAIR TREAD SHALL BE 11 INCHES MINIMUM.
- SECTION 1011.8 – THE MAXIMUM DISTANCE A STAIR MAY RISE WITHOUT A LANDING IS 12 FEET.
- SECTION 1011.11 – HANDRAIL IS REQUIRED ON EACH SIDE.
- SECTION 1014.2 – HANDRAIL HEIGHT FROM NOSING SHALL BE NOT LESS THAN 34 INCHES AND NOT MORE THAN 38 INCHES.

STAIRS OPEN; TWO STORY OPENING - IBC 712.1.9
STAIRS PERMITTED TO BE OPEN - CONNECTING ONLY TWO LEVELS.

GUARDS - IBC SECTION 1015
- SECTION 1015.2 - GUARDS SHALL BE LOCATED ALONG OPEN-SIDED WALKING SURFACES THAT ARE MORE THAN 30 INCHES TO FLOOR OR GRADE BELOW.
- SECTION 1015.3 - HEIGHT SHALL BE NOT LESS THAN 42 INCHES
- OPENING LIMITATION SHALL NOT ALLOW PASSAGE OF A SPHERE 4 INCHES IN DIAMETER

ELEVATORS - IBC SECTION 1009.4 AND 3006
- SECTION 1009.4 – ELEVATORS MAY BE USED AS AN ACCESSIBLE MEANS OF EGRESS.
- SECTION 1009.4 – AREA OF REFUGE IS NOT REQUIRED (SPRINKLED).
- SECTION 1009.8 – TWO WAY COMMUNICATION IS REQUIRED AT THE LANDING.
- SECTION 1009.9 – SIGNAGE IS REQUIRED.
- SECTION 3006.2 – ELEVATOR HOIST-WAY OPENING PROTECTION IS NOT REQUIRED WHERE THE ELEVATOR ONLY CONNECTS 3 STORIES.
- SECTION 3006.3 – HOIST-WAY OPENING PROTECTION FOR ELEVATOR THAT CONNECTS MORE THAN 3 STORIES REQUIRED AN ADDITIONAL DOOR FOR SMOKE AND DRAFT CONTROL OR HOIST-WAY PRESSURIZED.

ACCESSIBLE – IBC CHAPTER 11
- ACCESSIBLE ROUTE FROM PARKING TO BUILDING ENTRANCE.
- ACCESSIBLE PARKING: TABLE 1106.1 (1 PER 25) PARKING STALLS; (2 PER 26 TO 50) PARKING STALLS.
- AT LEAST ONE PARKING SHALL BE ACCESSIBLE VAN. PARKING STALL WIDTH = 11 FT. WITH AISLE OF 5 FEET.
- THE ACCESSIBLE STALL AND AISLE CAN NOT SLOOP MORE THAN 2% (1:48).
- ACCESSIBLE ENTRANCES: AT LEAST 60 % OF ALL PUBLIC ENTRANCES SHALL BE ACCESSIBLE.
- SECTION 1111 – REQUIRED ACCESSIBLE ELEMENTS SHALL BE IDENTIFIED USING THE INTERNATIONAL SYMBOL OF ACCESSIBILITY.
- IBC SECTION 1109.2.2 – AT LEAST ONE WHEEL CHAIR ACCESSIBLE COMPARTMENT WILL BE PROVIDED.
- IBC SECTION 1109.3 – EACH RESTROOM WILL NEED TO HAVE 5% (AT LEAST ONE) ACCESSIBLE SINK.
- IBC SECTION 1110 – REQUIRED ACCESSIBLE ELEMENTS SHALL BE IDENTIFIED USING THE INTERNATIONAL SYMBOLS OF ACCESSIBILITY.

INTERIOR WALL AND CEILING FINISH REQUIREMENTS - IBC TABLE 803.11

		OCC. 'A'	OCC. 'B'
- INTERIOR EXIT STAIRWAYS,ETC	CLASS	'B'	'B'
- CORRIDORS/ENCLOSURE FOR EXIT ACCESS STAIRWAYS	CLASS	'B'	'C'
- ROOMS AND ENCLOSED SPACES	CLASS	'C'	'C'

PORTABLE FIRE EXTINGUISHERS: SECTION 906.1
MAXIMUM DISTANCE OF TRAVEL TO EXTINGUISHER 75 FEET

PLUMBING FIXTURES REQUIRED – IBC CHAPTER 29
SECTION 2902.3.2 LOCATION OF TOILET FACILITIES
- SHALL BE LOCATED NOT MORE THAN ONE STORY ABOVE OR BELOW AND WITHIN 500 FEET

OCC. 'A-3' = TOTAL OCCUPANTS=456 228 MEN 228 WOMEN

REQUIRED FOR 'A-3' ONLY:

WATER CLOSETS MEN	WATER CLOSETS WOMEN	LAVATORIES MEN	LAVATORIES WOMEN	BATHTUBS/ SHOWERS	DRINKING FOUNTAINS	SERVICE SINK
1/125	1/65	1/200		0	1/500	1
1.82	3.50	1.14	1.14	0	0.91	1

OCC. 'B' = TOTAL OCCUPANTS=25 12 MEN 13 WOMEN

REQUIRED FOR 'B' ONLY:

WATER CLOSETS MEN	WATER CLOSETS WOMEN	LAVATORIES MEN	LAVATORIES WOMEN	BATHTUBS/ SHOWERS	DRINKING FOUNTAINS	SERVICE SINK
1/25 FOR FIRST 50		1/40 FOR FIRST 80		0	1/100	1
0.48	0.48	0.3	0.32	0	0.25	1

TOTAL REQ:

WATER CLOSETS MEN	WATER CLOSETS WOMEN	LAVATORIES MEN	LAVATORIES WOMEN	BATHTUBS/ SHOWERS	DRINKING FOUNTAINS	SERVICE SINK
2.3(3)	3.98(4)	1.44(2)	1.46(2)	0	1.16(2)	1
ACTUAL:						
3*	**4**	**3**	**4**	**3**	**2**	**1**

*INCLUDES UNISEX RESTROOM

MAXIMUM VERTICAL FENESTRATION IECC C402.4.1 CALCULATION

NORTH ELEVATION	**SOLID**	**GLAZING**
EXISTING:	1,891 SF	1,129 SF
RENOVATED:	185 SF	580 SF
TOTAL	2,076 SF	1,709 SF

WEST ELEVATION	**SOLID**	**GLAZING**
EXISTING:	1,321 SF	0 SF
RENOVATED:	1,708 SF	422 SF
TOTAL	3,029	422 SF

SOUTH ELEVATION	**SOLID**	**GLAZING**
EXISTING:	2,901 SF	119 SF
RENOVATED:	754 SF	72 SF
TOTAL	3,655 SF	191 SF

EAST ELEVATION	**SOLID**	**GLAZING**
EXISTING:	3,537 SF	0 SF
RENOVATED:	0 SF	0 SF
TOTAL	3,537 SF	0 SF

BUILDING TOTAL	**SOLID**	**GLAZING**	
	12,297 SF	2,322 SF	14,619 SF

TOTAL VERTICAL SF = 12,297 SF + 2,322 SF = 14,619 SF

2,322 SF / 14,619 SF = .1588 x 100 = 15.88 = 16%

MAXIMUM VERTICAL FENESTRATION = 30%
ACTUAL VERTICAL FENESTRATION = 16%

ARCHITECT 1877

ajc architects

703 east 1700 south
salt lake city, utah 84105
ph: 801.466.8818
fx: 801.466.4411
www.ajcarchitects.com

ARCHITECT / CONSULTANT

STATE OF UTAH
KENT R. RIGBY
No. 135096
05.18.2020
LICENSED ARCHITECT

OWNER INFORMATION

PROJECT DESCRIPTION

DUMKE GYMNASTICS TRAINING CENTER

1825 E. SOUTH CAMPUS DRIVE
SALT LAKE CITY, UT 84112

AHJ STAMP

SHEET NAME:

CODE SUMMARY

REVISIONS

MARK DATE DESCRIPTION

ISSUE DATA

ISSUE DATE: 10.18.21
ISSUE TYPE: CD
DRAWN BY: AT|DG
CHECKED BY: KR
PROJECT#: 1877

SHEET NUMBER:

AE002

10/18/2021 4:28:30 PM S:\ajc users\ataylor\Revit Local Files\21 0928 - 1877 - Dumke Womens Gymnastics Facility V20_detached_ataylorUV5V2.rvt

ALL IDEAS, DESIGNS, ARRANGEMENTS AND PLANS INDICATED OR REPRESENTED BY THIS DRAWING ARE OWNED BY, AND THE PROPERTY OF, AJC ARCHITECTS PC, AND WERE CREATED, EVOLVED, AND DEVELOPED FOR USE ON, AND IN CONNECTION WITH, THE SPECIFIED PROJECT. NONE OF THE IDEAS, DESIGNS, ARRANGEMENTS OR PLANS INDICATED OR REPRESENTED BY THIS DRAWING OR OTHERWISE AS A CONSEQUENCE OF THE COMMISSIONING OF THE PROJECT BY THE CLIENT TO AJC ARCHITECTS PC OR ANY OF ITS EMPLOYEES OR CONSULTANTS MAY BE USED BY OR DISCLOSED TO ANY PERSON, FIRM, OR CORPORATION FOR ANY PURPOSE WHATSOEVER WITHOUT WRITTEN CONSENT OF AJC ARCHITECTS PC. WRITTEN DIMENSIONS ON THESE DRAWINGS SHALL HAVE PRECEDENCE OVER SCALE DIMENSIONS. CONTRACTORS SHALL VERIFY AND BE RESPONSIBLE FOR ALL DIMENSIONS AND CONDITIONS ON THE JOB AND THIS OFFICE MUST BE NOTIFIED OF ANY VARIATION FROM THE DIMENSIONS AND CONDITIONS SHOWN BY THESE DRAWINGS. WARNING: REPRODUCTION HEREOF IS A CRIMINAL OFFENSE UNDER 18 U.S.C. 506. UNAUTHORIZED DISCLOSURE MAY CONSTITUTE TRADE SECRET MISAPPROPRIATION IN VIOLATION OF 17 U.S.C. § 1 ET. SEQ. AND OTHER LAWS.

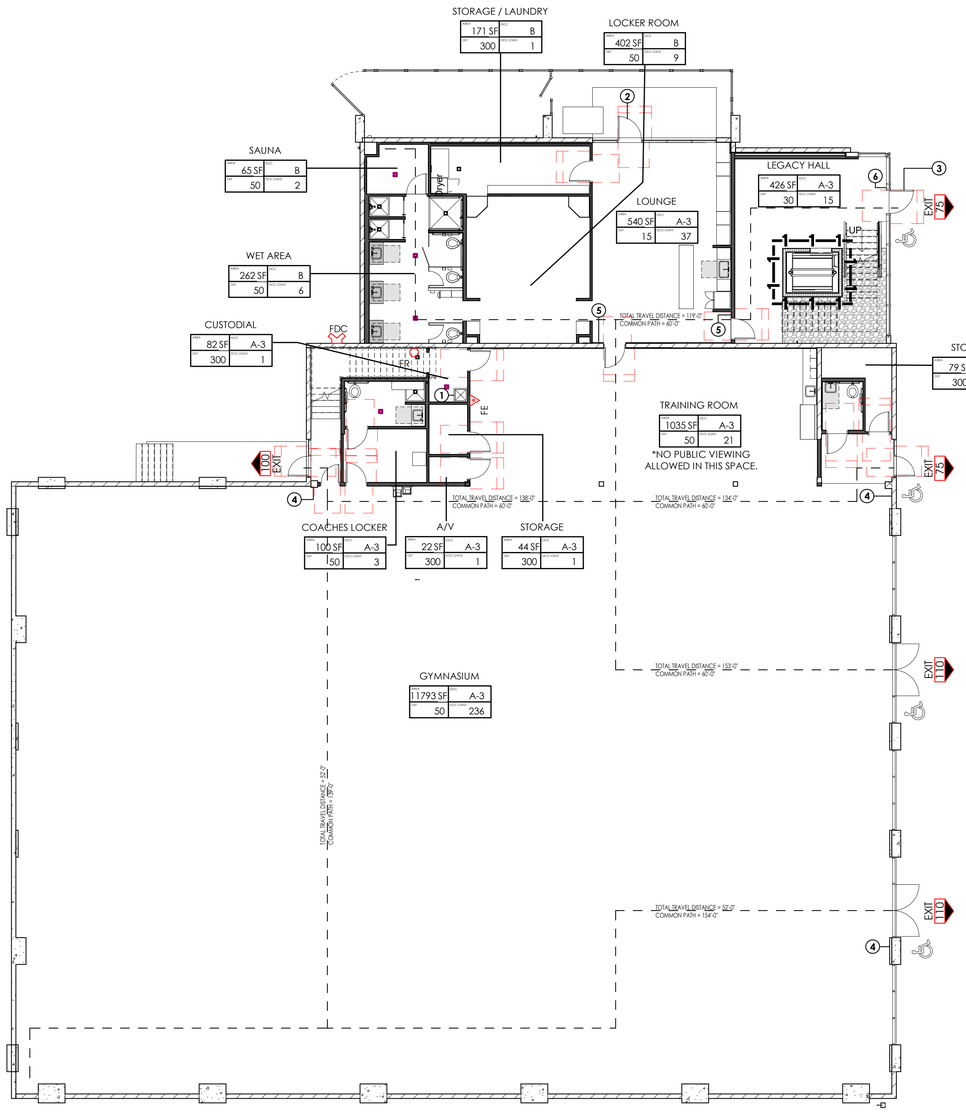

A1 CODE PLAN - LEVEL 01

3/32" = 1'-0"

0' 5'-4" 10'-8" 21'-4" 32'-0"

SCALE : 3/32" = 1'-0"

GENERAL NOTES:

- SEE SHEET GI003 FOR GENERAL NOTES LEGENDS AND ABBREVIATIONS.
- SEE GI002 FOR DRAWING INDEX.
- DO NOT SCALE DRAWINGS.
- CONTRACTOR / SUBCONTRACTOR SHALL VERIFY ALL DIMENSIONS AND CONDITIONS BEFORE BEGINNING WORK, AND SHALL REPORT TO THE ARCHITECT ANY ERRORS, INCONSISTENCIES OR OMISSIONS BEFORE BEGINNING WORK. SEE GENERAL NOTES AND SPECIFICATIONS.
- EXIT SIGNS SHALL BE INTERNALLY OR EXTERNALLY ILLUMINATED AT ALL TIMES AND SHALL BE CONNECTED TO AN EMERGENCY POWER SYSTEM (BATTERIES, UNIT EQUIPMENT OR AN ON-SITE GENERATOR) THAT WILL AUTOMATICALLY ILLUMINATE THE EXIT SIGNS FOR A DURATION OF NOT LESS THAN 90 MINUTES.
- ELEVATOR SHALL COMPLY WITH THE EMERGENCY OPERATION AND SIGNALING DEVICE REQUIREMENTS OF SECTION 2.27 OF ASME A17.1, AND STANDBY POWER SHALL BE PROVIDED IN ACCORDANCE WITH CBC CHAPYER 27 AND IBC 3003 PER IBC 1009.4.

FIRE EXTINGUISHER	FE
FIRE DEPARTMENT CONNECTION	FDC
FIRE RISER, SEE AE003	FR
EXIT OCCUPANT LOAD	EXIT
EXIT TRAVEL DISTANCE	– – – –
1 HR FIRE RATED CONST.	–1—1—1–
ACCESSIBLE EGRESS	

KEYED NOTES:

1	NEW SERVICE SINK, SEE PLUMBING PLAN.
2	THIS IS NOT AN EGRESS DOOR.
3	ACCESSIBLE PRIMARY ENTRANCE.
4	OCCUPANT LOAD SIGNAGE. ALLOWABLE OCCUPANCY OF AREA = 236.
5	OCCUPANT LOAD SIGNAGE. ALLOWABLE OCCUPANCY OF AREA = 37.
6	OCCUPANT LOAD SIGNAGE. ALLOWABLE OCCUPANCY OF AREA = 15.

ARCHITECT 1877

ajc architects

703 east 1700 south
salt lake city, utah 84105
ph: 801.466.8818
fx: 801.466.4411
www.ajcarchitects.com

ARCHITECT / CONSULTANT

STATE OF UTAH
KENT B. RIGBY
No. 135090
05.18.2020
LICENSED ARCHITECT

OWNER INFORMATION

PROJECT DESCRIPTION

DUMKE GYMNASTICS TRAINING CENTER

1825 E. SOUTH CAMPUS DRIVE
SALT LAKE CITY, UT 84112

AHJ STAMP

SHEET NAME:

CODE PLAN - LEVEL 01

REVISIONS

MARK	DATE	DESCRIPTION

ISSUE DATA

ISSUE DATE:	10.18.21
ISSUE TYPE:	CD
DRAWN BY:	AT|DG
CHECKED BY:	KR
PROJECT#:	1877

SHEET NUMBER:

AE003

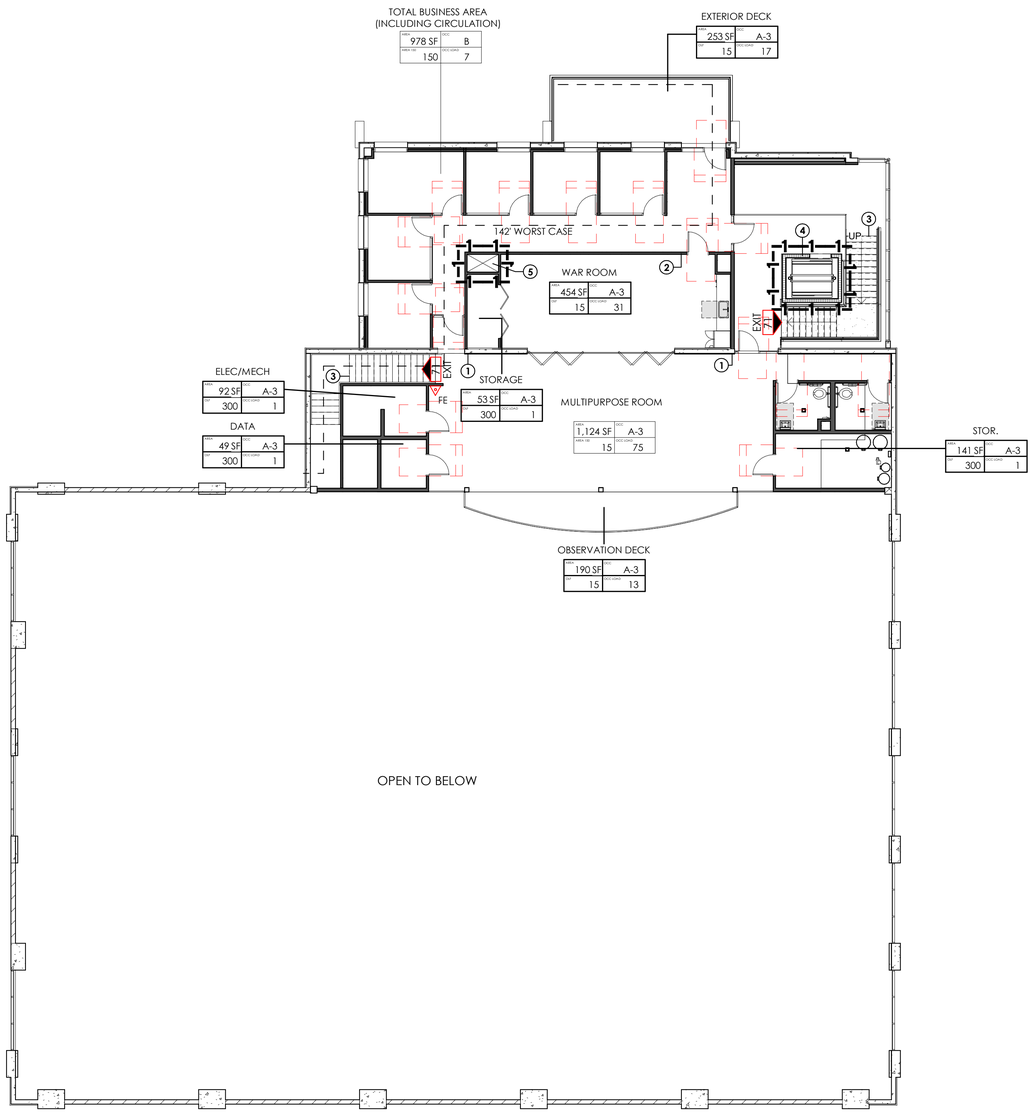

GENERAL NOTES:

- SEE SHEET GI003 FOR GENERAL NOTES LEGENDS AND ABBREVIATIONS.
- SEE GI002 FOR DRAWING INDEX.
- DO NOT SCALE DRAWINGS.
- CONTRACTOR / SUBCONTRACTOR SHALL VERIFY ALL DIMENSIONS AND CONDITIONS BEFORE BEGINNING WORK, AND SHALL REPORT TO THE ARCHITECT ANY ERRORS, INCONSISTENCIES OR OMISSIONS BEFORE BEGINNING WORK. SEE GENERAL NOTES AND SPECIFICATIONS.
- EXIT SIGNS SHALL BE INTERNALLY OR EXTERNALLY ILLUMINATED AT ALL TIMES AND SHALL BE CONNECTED TO AN EMERGENCY POWER SYSTEM (BATTERIES, UNIT EQUIPMENT OR AN ON-SITE GENERATOR) THAT WILL AUTOMATICALLY ILLUMINATE THE EXIT SIGNS FOR A DURATION OF NOT LESS THAN 90 MINUTES.
- ELEVATOR SHALL COMPLY WITH THE EMERGENCY OPERATION AND SIGNALING DEVICE REQUIREMENTS OF SECTION 2.27 OF ASME A17.1, AND STANDBY POWER SHALL BE PROVIDED IN ACCORDANCE WITH CBC CHAPYER 27 AND IBC 3003 PER IBC 1009.4.

FIRE EXTINGUISHER	FE
FIRE DEPARTMENT CONNECTION	FDC
FIRE RISER, SEE AE003	FR
EXIT OCCUPANT LOAD	EXIT
EXIT TRAVEL DISTANCE	– – – –
1 HR FIRE RATED CONST.	–1—1—1–
ACCESSIBLE EGRESS	

KEYED NOTES:

1 OCCUPANT LOAD SIGNAGE. ALLOWABLE OCCUPANCY OF AREA = 88.
2 OCCUPANT LOAD SIGNAGE. ALLOWABLE OCCUPANCY OF AREA = 31.
3 ACCESSIBLE STAIRS ALONG EGRESS PATH.
4 ACCESSIBLE ELEVATOR ALONG EGRESS PATH.
5 EACH SHAFT TO BE INFILLED WITH FORMED SHEET METAL TO PROVIDE 1 HR RATING PER IBC 713.11.

A1 **CODE PLAN - LEVEL 02**
3/32" = 1'-0"

0' 5'-4" 10'-8" 21'-4" 32'-0"
SCALE : 3/32" = 1'-0"

ARCHITECT 1877
ajc architects
703 east 1700 south
salt lake city, utah 84105
ph: 801.466.8818
fx: 801.466.4411
www.ajcarchitects.com

ARCHITECT / CONSULTANT

STATE OF UTAH
KENT B. RIGBY
No. 135090
05.18.2020
LICENSED ARCHITECT

OWNER INFORMATION

PROJECT DESCRIPTION

DUMKE GYMNASTICS TRAINING CENTER

1825 E. SOUTH CAMPUS DRIVE
SALT LAKE CITY, UT 84112

AHJ STAMP

SHEET NAME:
CODE PLAN - LEVEL 02

REVISIONS

MARK	DATE	DESCRIPTION

ISSUE DATA

ISSUE DATE:	10.18.21
ISSUE TYPE:	CD
DRAWN BY:	AT|DG
CHECKED BY:	KR
PROJECT#:	1877

SHEET NUMBER:
AE004

10/18/2021 4:28:33 PM S:\ajc users\ataylor\Revit Local Files\21 0928 - 1877 - Dumke Womens Gymnastics Facility V20_detached_ataylorUV5V2.rvt
ALL IDEAS, DESIGNS, ARRANGEMENTS AND PLANS INDICATED OR REPRESENTED BY THIS DRAWING ARE OWNED BY, AND THE PROPERTY OF AJC ARCHITECTS PC, AND WERE CREATED, EVOLVED, AND DEVELOPED FOR USE ON, AND IN CONNECTION WITH, THE SPECIFIED PROJECT. NONE OF THE IDEAS, DESIGNS, ARRANGEMENTS OR PLANS INDICATED IN OR REPRESENTED BY THIS DRAWING, ALL OF WHICH ARE COPYRIGHTED BY AJC ARCHITECTS PC, AND NO PART THEREOF, SHALL BE USED BY OR DISCLOSED TO ANY PERSON, FIRM, OR CORPORATION FOR ANY PURPOSE WHATSOEVER WITHOUT WRITTEN CONSENT OF AJC ARCHITECTS PC. WRITTEN DIMENSIONS ON THESE DRAWINGS SHALL HAVE PRECEDENCE OVER SCALE DIMENSIONS. CONTRACTORS SHALL VERIFY AND BE RESPONSIBLE FOR ALL DIMENSIONS AND CONDITIONS ON THE JOB AND THIS OFFICE MUST BE NOTIFIED OF ANY VARIATION FROM THE DIMENSIONS AND CONDITIONS SHOWN BY THESE DRAWINGS. WARNING: REPRODUCTION HEREOF IS A CRIMINAL OFFENSE UNDER 18 U.S.C. SEC. 506. UNAUTHORIZED DISCLOSURE MAY CONSTITUTE TRADE SECRET MISAPPROPRIATION IN VIOLATION OF 12-24-2-3 I.C. ET. SEQ. AND OTHER LAWS.

10/18/2021 4:28:35 PM S:\ajc users\ataylor\Revit Local Files\21 0928 - 1877 - Dumke Womens Gymnastics Facility V20_detached_ataylorUV5V2.rvt

ALL IDEAS, DESIGNS, ARRANGEMENTS AND PLANS INDICATED OR REPRESENTED BY THIS DRAWING ARE OWNED BY, AND THE PROPERTY OF, AJC ARCHITECTS PC, AND WERE CREATED, EVOLVED, AND DEVELOPED FOR USE ON, AND IN CONNECTION WITH, THE SPECIFIED PROJECT. NONE OF THE IDEAS, DESIGNS, ARRANGEMENTS OR PLANS INDICATED OR REPRESENTED BY THIS DRAWING OR OTHER DOCUMENTS MAY BE USED BY OR DISCLOSED TO ANY PERSON, FIRM, OR CORPORATION FOR ANY PURPOSE WHATSOEVER WITHOUT WRITTEN CONSENT OF AJC ARCHITECTS PC. WRITTEN DIMENSIONS ON THESE DRAWINGS SHALL HAVE PRECEDENCE OVER SCALE DIMENSIONS. CONTRACTORS SHALL VERIFY AND BE RESPONSIBLE FOR ALL DIMENSIONS AND CONDITIONS ON THE JOB AND THIS OFFICE MUST BE NOTIFIED OF ANY VARIATION FROM THE DIMENSIONS AND CONDITIONS SHOWN BY THESE DRAWINGS. WARNING: REPRODUCTION HEREOF IS A CRIMINAL OFFENSE UNDER 18 U.S.C. SEC. 506. UNAUTHORIZED DISCLOSURE MAY CONSTITUTE TRADE SECRET MISAPPROPRIATION IN VIOLATION OF 12-24-2-3 I.C. ET. SEQ. AND OTHER LAWS.

1 2 3 4 5

D

C

B

A

ROOF TYPES

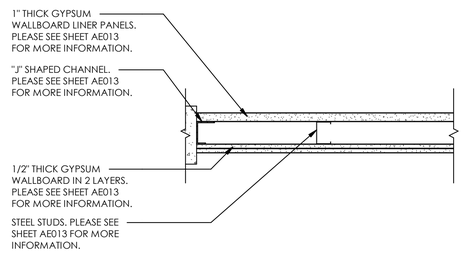

UL U497 - 1-HR ASSEMBLY C1

1-HOUR FIRE RATED ASSEMBLY RE: UL - U497

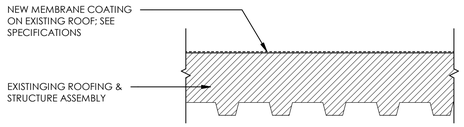

EXISTING ROOF - NEW MEMBRANE COATING R1

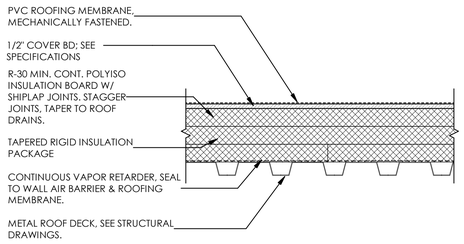

MTL DECK - 5" INSUL - COVER BD - MEMBRANE R2

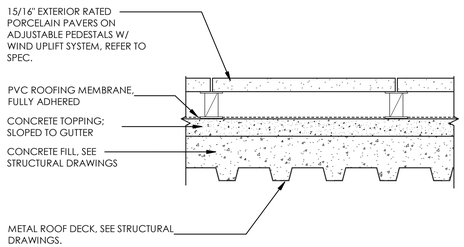

5" COMPOSITE MTL DECK W/ PORCELAIN PAVERS R3

FLOOR TYPES

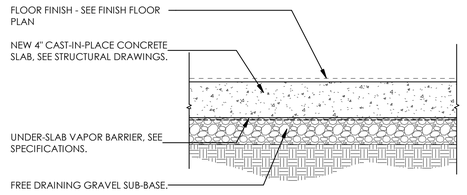

4" SLAB ON GRADE F1

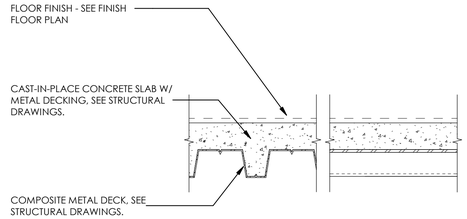

6 1/2" SUSPENDED SLAB F2

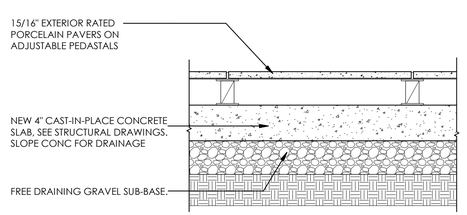

PORCELAIN TILE ON PEDESTALS F3

ARCHITECT 1877

ajc architects

703 east 1700 south
salt lake city, utah 84105
ph: 801.466.8818
fx: 801.466.4411
www.ajcarchitects.com

ARCHITECT / CONSULTANT

STATE OF UTAH
KENT B. RIGBY
No. 135090
05.18.2020
LICENSED ARCHITECT

OWNER INFORMATION

PROJECT DESCRIPTION

DUMKE GYMNASTICS TRAINING CENTER

1825 E. SOUTH CAMPUS DRIVE
SALT LAKE CITY, UT 84112

AHJ STAMP

SHEET NAME:

ASSEMBLIES - FLOOR, ROOF, CEILING

REVISIONS

MARK	DATE	DESCRIPTION

ISSUE DATA

ISSUE DATE:	10.18.21
ISSUE TYPE:	CD
DRAWN BY:	AT|DG
CHECKED BY:	KR
PROJECT#:	1877

SHEET NUMBER:

AE010

ALL IDEAS, DESIGNS, ARRANGEMENTS AND PLANS INDICATED OR REPRESENTED BY THIS DRAWING ARE OWNED BY AND THE PROPERTY OF AJC ARCHITECTS PC AND WERE CREATED, EVOLVED AND DEVELOPED FOR USE ON AND IN CONNECTION WITH THE SPECIFIED PROJECT. NONE OF THE IDEAS, DESIGNS, ARRANGEMENTS OR PLANS INDICATED OR REPRESENTED BY THIS DRAWING MAY BE USED BY OR DISCLOSED TO ANY PERSON, FIRM, OR CORPORATION FOR ANY PURPOSE WHATSOEVER WITHOUT WRITTEN CONSENT OF AJC ARCHITECTS PC. WRITTEN DIMENSIONS ON THESE DRAWINGS SHALL HAVE PRECEDENCE OVER SCALE DIMENSIONS. CONTRACTORS SHALL VERIFY AND BE RESPONSIBLE FOR ALL DIMENSIONS AND CONDITIONS ON THE JOB AND THIS OFFICE MUST BE NOTIFIED OF ANY VARIATION FROM THE DIMENSIONS AND CONDITIONS SHOWN BY THESE DRAWINGS. WARNING: REPRODUCTION HEREOF IS A CRIMINAL OFFENSE UNDER 18 U.S.C. 506; UNAUTHORIZED DISCLOSURE MAY CONSTITUTE TRADE SECRET MISAPPROPRIATION IN VIOLATION OF 17 C.24.2-311.1 ET. SEQ. AND OTHER LAWS.

10/18/2021 4:28:40 PM S:\ajc users\ataylor\Revit Local Files\21 0928 - 1877 - Dumke Womens Gymnastics Facility V20_detached_ataylorUv5V2.rvt

EXT. WALL TYPES:

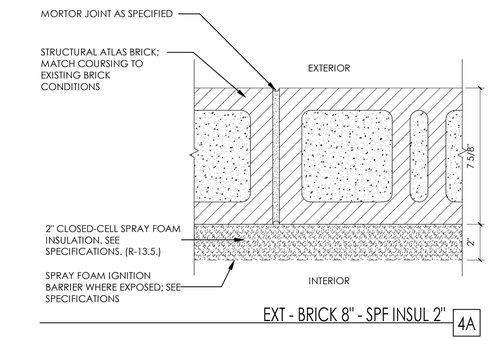

EXT - BRICK 8" - SPF INSUL 2" 4A

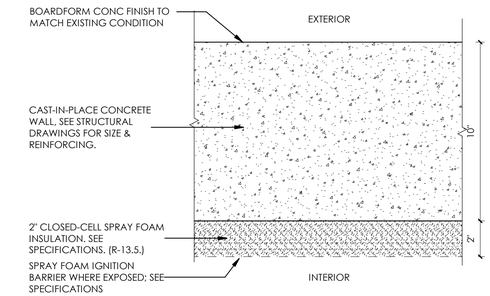

EXT - BOARDFORM CONCRETE WALL - SPF INSUL 2" 3C

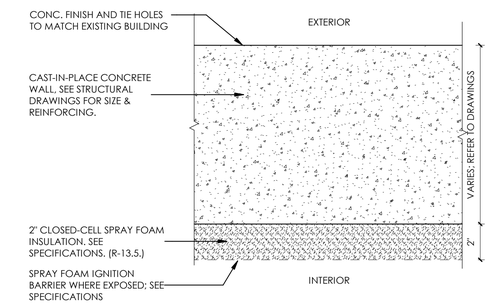

EXT - CONCRETE WALL - SPF INSUL 2" 3B

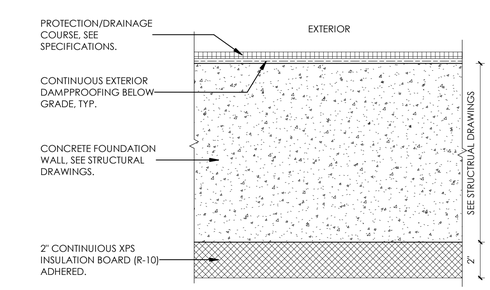

EXT - CONCRETE FOUNDATION WALL 3A

ARCHITECT 1877

ajc architects

703 east 1700 south
salt lake city, utah 84105
ph: 801.466.8818
fx: 801.466.4411
www.ajcarchitects.com

ARCHITECT / CONSULTANT

STATE OF UTAH
KENT B. RIGBY
No. 135090
05.18.2020
LICENSED ARCHITECT

OWNER INFORMATION

PROJECT DESCRIPTION

DUMKE GYMNASTICS TRAINING CENTER

1825 E. SOUTH CAMPUS DRIVE
SALT LAKE CITY, UT 84112

AHJ STAMP

SHEET NAME:

ASSEMBLIES - WALLS - EXT.

REVISIONS

MARK	DATE	DESCRIPTION

ISSUE DATA

ISSUE DATE:	10.18.21
ISSUE TYPE:	CD
DRAWN BY:	AT|DG
CHECKED BY:	KR
PROJECT#:	1877

SHEET NUMBER:

AE011

INT. WALL TYPES:

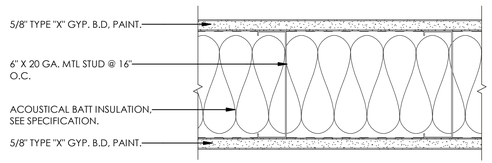

*NOTE: EXTEND WALL & GYP. BD. 6" ABOVE ADJACENT CEILING HEIGHT, U.N.O. SEE TYPICAL WALL DETAILS.

INT - MTL STUD 6" - GYP BD BOTH SIDES 9A

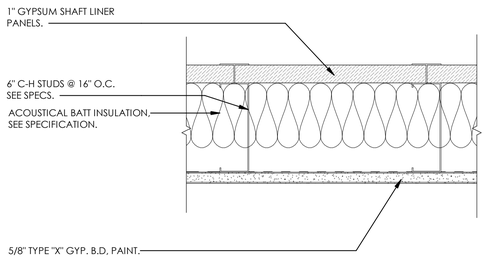

INT - MTL STUD 6" - SHAFTWALL 9E
1-HOUR FIRE RATED ASSEMBLY RE: UL - U499

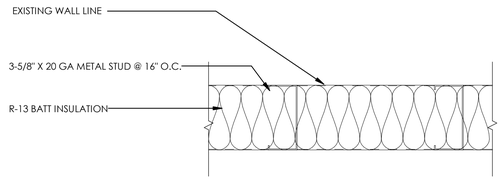

INT - MTL STUD 3 5/8" - FURRING - INSUL. 9I

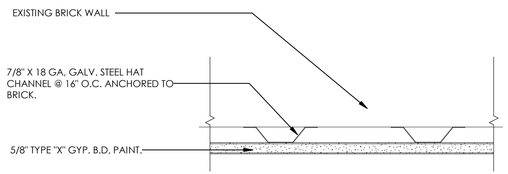

INT - HAT CHANNEL STUD 1 1/2" - GYP BD FURRING 9M

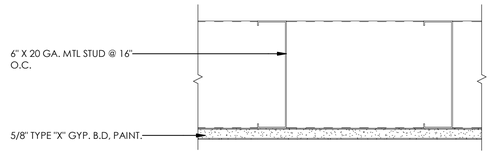

*NOTE: EXTEND WALL & GYP. BD. 6" ABOVE ADJACENT CEILING HEIGHT, U.N.O. SEE TYPICAL WALL DETAILS.

INT - STUD 6" GYP BD ONE SIDE 9B

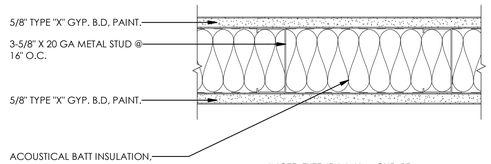

*NOTE: EXTEND WALL & GYP. BD. 6" ABOVE ADJACENT CEILING HEIGHT, U.N.O. SEE TYPICAL WALL DETAILS.

INT - MTL STUD 3 5/8" - GYP BD BOTH SIDES 9F

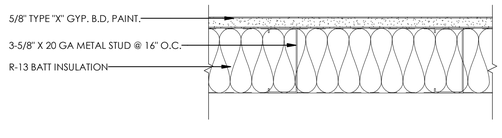

INT - MTL STUD 3 5/8" - SAUNA INT - INSUL. 9J

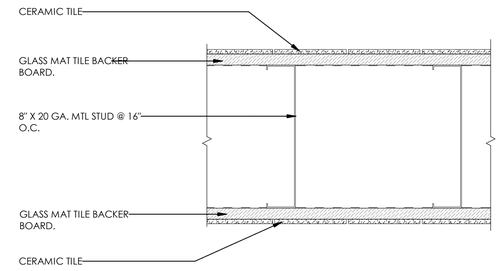

INT - MTL STUD 8" GYP BD ONE SIDE TILE BOTH SIDES 9N

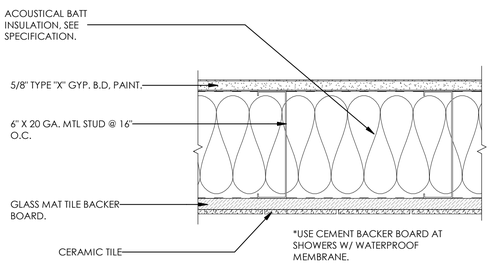

INT - MTL STUD 6" - TILE ONE SIDE 9C

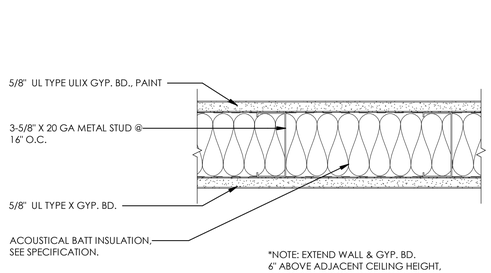

*NOTE: EXTEND WALL & GYP. BD. 6" ABOVE ADJACENT CEILING HEIGHT, U.N.O. SEE TYPICAL WALL DETAILS.

INT - MTL STUD 3 5/8" - GYP BD BOTH SIDES RATED 9G
1-HOUR FIRE RATED ASSEMBLY RE: UL - U419

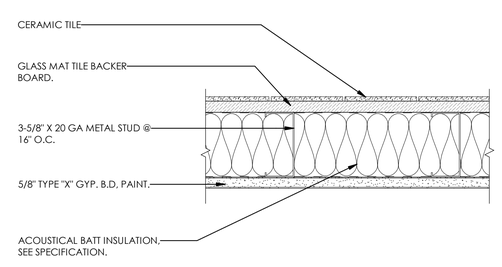

INT - MTL STUD 3 5/8" - GYP BD & TILE 9K

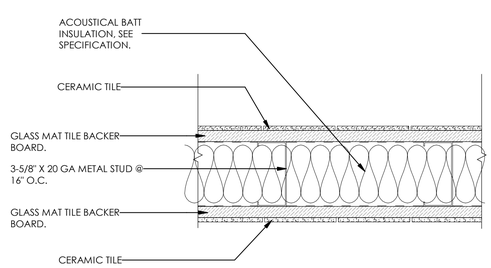

INT - MTL STUD 3 5/8" - TILE EA. SIDE 9D

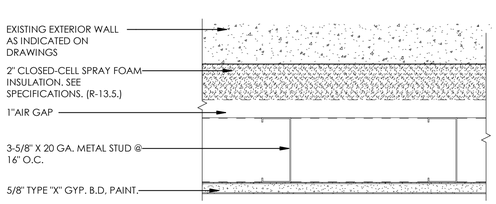

INT - SPF 2" - MTL STUD 3 5/8" - GYP BD FURRING 9H

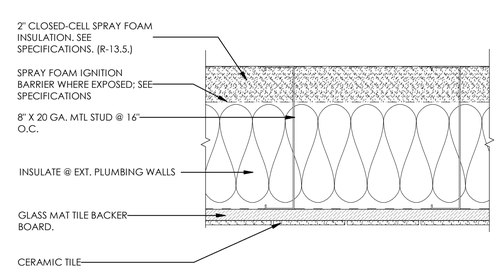

INT - MTL STUD 8" TILE ONE SIDE 9L

10/18/2021 4:28:46 PM S:\ajc users\taylor\Revit Local Files\21 0928 - 1877 - Dumke Womens Gymnastics Facility V20_detached_ataylorUv5V2.rvt

ALL IDEAS, DESIGNS, ARRANGEMENTS AND PLANS INDICATED OR REPRESENTED BY THIS DRAWING ARE OWNED BY AND THE PROPERTY OF AJC ARCHITECTS PC AND WERE CREATED, EVOLVED, AND DEVELOPED FOR USE ON AND IN CONNECTION WITH THE SPECIFIED PROJECT. NONE OF THE IDEAS, DESIGNS, ARRANGEMENTS OR PLANS SHALL BE USED BY OR DISCLOSED TO ANY PERSON, FIRM, OR CORPORATION FOR ANY PURPOSE WHATSOEVER WITHOUT WRITTEN CONSENT OF AJC ARCHITECTS PC. WRITTEN DIMENSIONS ON THESE DRAWINGS SHALL HAVE PRECEDENCE OVER SCALE DIMENSIONS. CONTRACTORS SHALL VERIFY AND BE RESPONSIBLE FOR ALL DIMENSIONS AND CONDITIONS ON THE JOB AND THIS OFFICE MUST BE NOTIFIED OF ANY VARIATION FROM THE DIMENSIONS AND CONDITIONS SHOWN BY THESE DRAWINGS. WARNING: REPRODUCTION HEREOF IS A CRIMINAL OFFENSE UNDER 18 U.S.C. 506, UNAUTHORIZED DISCLOSURE MAY CONSTITUTE TRADE SECRET MISAPPROPRIATION IN VIOLATION OF 17 U.S.C. § 1832 AND OTHER LAWS.

ARCHITECT 1877

ajc architects

703 east 1700 south
salt lake city, utah 84105
ph: 801.466.8818
fx: 801.466.4411
www.ajcarchitects.com

ARCHITECT / CONSULTANT

STATE OF UTAH
KENT B. RIGBY
No. 135090
05.18.2020
LICENSED ARCHITECT

OWNER INFORMATION

PROJECT DESCRIPTION

DUMKE GYMNASTICS TRAINING CENTER

1825 E. SOUTH CAMPUS DRIVE
SALT LAKE CITY, UT 84112

AHJ STAMP

SHEET NAME:

ASSEMBLIES - WALLS - INT.

REVISIONS

MARK	DATE	DESCRIPTION

ISSUE DATA

ISSUE DATE:	10.18.21
ISSUE TYPE:	CD
DRAWN BY:	AT|DG
CHECKED BY:	KR
PROJECT#:	1877

SHEET NUMBER:

AE012

10/18/2021 4:28:48 PM S:\ajc users\taylor\Revit Local Files\21 0928 - 1877 - Dumke Womens Gymnastics Facility V20_detached_ataylorUV5v2.rvt

ALL IDEAS, DESIGNS, ARRANGEMENTS AND PLANS INDICATED OR REPRESENTED BY THIS DRAWING ARE OWNED BY AND THE PROPERTY OF AJC ARCHITECTS PC AND WERE CREATED, EVOLVED, AND DEVELOPED FOR USE ON AND IN CONNECTION WITH THE SPECIFIED PROJECT. NONE OF THE IDEAS, DESIGNS, ARRANGEMENTS OR PLANS INDICATED OR REPRESENTED BY THIS DRAWING OR OTHER DRAWINGS, WRITTEN SPECIFICATIONS OR OTHER DOCUMENTS PREPARED BY AJC ARCHITECTS PC, IN WHOLE OR IN PART, SHALL BE USED BY OR DISCLOSED TO ANY PERSON, FIRM, OR CORPORATION FOR ANY PURPOSE WHATSOEVER WITHOUT WRITTEN CONSENT OF AJC ARCHITECTS PC. WRITTEN DIMENSIONS ON THESE DRAWINGS SHALL HAVE PRECEDENCE OVER SCALE DIMENSIONS. CONTRACTORS SHALL VERIFY AND BE RESPONSIBLE FOR ALL DIMENSIONS AND CONDITIONS ON THE JOB AND THIS OFFICE MUST BE NOTIFIED OF ANY VARIATION FROM THE DIMENSIONS AND CONDITIONS SHOWN BY THESE DRAWINGS. WARNING - REPRODUCTION HEREOF IS A CRIMINAL OFFENSE UNDER 18 U.S.C. SEC. 506. UNAUTHORIZED DISCLOSURE MAY CONSTITUTE TRADE SECRET MISAPPROPRIATION IN VIOLATION OF UCA 13-24-2 ET. SEQ. AND OTHER LAWS.

UL-U419:

ONLINE CERTIFICATIONS DIRECTORY

Design No. U419
BXUV.U419
Fire Resistance Ratings - ANSI/UL 263

Page Bottom

Design/System/Construction/Assembly Usage Disclaimer

- Authorities Having Jurisdiction should be consulted in all cases as to the particular requirements covering the installation and use of UL Certified products, equipment, system, devices, and materials.
- Authorities Having Jurisdiction should be consulted before construction.
- Fire resistance assemblies and products are developed by the design submitter and have been investigated by UL for compliance with applicable requirements. The published information cannot always address every construction nuance encountered in the field.
- When field issues arise, it is recommended the first contact for assistance be the technical service staff provided by the product manufacturer noted for the design. Users of fire resistance assemblies are advised to consult the general Guide Information for each product category and each group of assemblies. The Guide Information includes specifics concerning alternate materials and alternate methods of construction.
- Only products which bear UL's Mark are considered Certified.

BXUV - Fire Resistance Ratings - ANSI/UL 263

BXUV7 - Fire Resistance Ratings - CAN/ULC-S101 Certified for Canada

See General Information for Fire-resistance Ratings - ANSI/UL 263

See General Information for Fire Resistance Ratings - CAN/ULC-S101 Certified for Canada

Design No. W419

May 28, 2015

Nonbearing Wall Rating — 1, 2, 3 or 4 Hr (See Items 4 & 5 through 5K)

*** Indicates such products shall bear the UL or cUL Certification Mark for jurisdictions employing the UL or cUL Certification (such as Canada), respectively.**

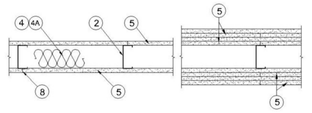

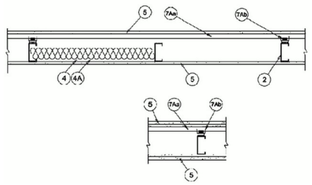

1. **Floor and Ceiling Runners —** (Not shown) — For use with Item 2 - Channel shaped, fabricated from min 25 MSG corrosion-protected steel, min depth to accommodate stud size, with min 1-1/4 in. long legs, attached to floor and ceiling with fasteners 24 in. OC max.

1A. **Framing Members* - Floor and Ceiling Runner —** Not shown - In lieu of Item 1 — For use with Item 2B, proprietary channel shaped runners, 3-5/8 in. deep attached to Floor and ceiling with fasteners 24 in. OC max.

CALIFORNIA EXPANDED METAL PRODUCTS CO — Viper25™ Track

CRACO MFG INC — SmartTrack25™

MARINO/WARE, DIV OF WARE INDUSTRIES INC — Viper25™ Track

PHILLIPS MFG CO L L C — Viper25™ Track

1B. **Framing Members* - Floor and Ceiling Runner —** Not shown - In lieu of Item 1 — For use with Item 2C, proprietary channel shaped runners, 1-1/4 in. wide by 3-5/8 in. deep fabricated from min 0.020 in. thick galv steel, attached to floor and ceiling with fasteners spaced 24 in. OC max.

CALIFORNIA EXPANDED METAL PRODUCTS CO — Viper20™ Track

MARINO/WARE, DIV OF WARE INDUSTRIES INC — Viper20™ Track

PHILLIPS MFG CO L L C — Viper20™ Track

1C. **Framing Members* — Floor and Ceiling Runners —** (Not shown) — In lieu of Item 1 - Channel shaped, attached to floor and ceiling with fasteners 24 in. OC. max.

ALLSTEEL & GYPSUM PRODUCTS INC — Type SUPREME Framing System

CONSOLIDATED FABRICATORS CORP, BUILDING PRODUCTS DIV — Type SUPREME Framing System

QUAIL RUN BUILDING MATERIALS INC — Type SUPREME Framing System

SCAFCO STEEL STUD MANUFACTURING CO — Type SUPREME Framing System

STEEL CONSTRUCTION SYSTEMS INC — Type SUPREME Framing System

UNITED METAL PRODUCTS INC — Type SUPREME Framing System

1D. **Floor and Ceiling Runners —** (Not shown)—For use with Item 2A- Channel shaped, fabricated from min 20 MSG corrosion-protected or galv steel, min depth to accommodate stud size, with min 1 in. long legs, attached to floor and ceiling with fasteners spaced max 24 in. OC.

1E. **Framing Members* — Floor and Ceiling Runners —** (Not shown, As an alternate to Item 1) — For use with Items 2E, 2F or 5G or 5I only, channel shaped, fabricated from min. 0.015 in. (min bare metal thickness) galvanized steel, attached to floor and ceiling with fasteners 24 in. OC. max.

CLARKDIETRICH BUILDING SYSTEMS — CD ProSTrak

DMFCWBS L L C — ProTRAK

MBA METAL FRAMING — ProTRAK

RAM SALES L L C — Ram ProTRAK

STEEL STRUCTURAL PRODUCTS L L C — Tri-S ProTRAK

1F. **Framing Members* - Floor and Ceiling Runner —** Not shown - In lieu of Item 1 — For use with Item 2F, proprietary channel shaped runners, minimum width to accommodate stud size, with 1- 1/8 in. long legs fabricated from min 0.015 in. (min bare metal thickness) galv steel, attached to floor and ceiling with fasteners spaced 24 in. OC max.

SUPER STUD BUILDING PRODUCTS — The Edge

1G. **Framing Members* - Floor and Ceiling Runner —** For use with Item 2G, proprietary channel shaped runners, minimum width to accommodate stud size attached to floor and ceiling with fasteners 24 in. OC max.

STUDCO BUILDING SYSTEMS — CROCSTUD Track

1H. **Floor and Ceiling Runners —** (Not shown) — Channel shaped, fabricated from min 0.02 in. galv steel, min width to accommodate stud size, with min 1 in. long legs, For use with Item 2H, studs formed and fabricated from min 0.02 in. galv steel or thicker, attached to floor and ceiling with fasteners spaced max 24 in. OC.

MARINO/WARE, DIV OF WARE INDUSTRIES INC — Viper20™ Track VT100.

1I. **Framing Members* - Floor and Ceiling Runners —** (Not shown, As an alternate to Item 1) — For use with Items 2H, channel shaped, fabricated from min. 0.015 in. (min bare metal thickness) galvanized steel, attached to floor and ceiling with fasteners 24 in. OC. max.

TELLING INDUSTRIES L L C — TRUE-TRACK™

1J. **Framing Members* - Floor and Ceiling Runner —** Not shown - In lieu of Item 1 — For use with Item 2I, proprietary channel shaped runners, 3-5/8 in. deep attached to floor and ceiling with fasteners 24 in. OC max.

TELLING INDUSTRIES L L C — Viper25™ Track

1K. **Framing Members* - Floor and Ceiling Runner —** Not shown - In lieu of Item 1 — For use with Item 2J, proprietary channel shaped runners, 1-1/4 in. wide by 3-5/8 in. deep fabricated from min 0.020 in. thick galv steel, attached to floor and ceiling with fasteners spaced 24 in. OC max.

TELLING INDUSTRIES L L C — Viper20™ Track

UL-U419 (CONT.):

2. **Steel Studs —** Channel shaped, fabricated from min 25 MSG corrosion-protected steel, min depth as indicated under Item 5, spaced a max of 24 in. OC. Studs to be cut 3/8 to 3/4 in. less than assembly height.

2A. **Steel Studs —** (As an alternate to Item 2, For use with Items 5B, 5E, 5H, 5J and 5K) Channel shaped, fabricated from min 20 MSG corrosion-protected or galv steel, 3-1/2 in. min depth, spaced a max of 16 in. OC. Studs friction-fit into floor and ceiling runners. Studs to be cut 5/8 to 3/4 in. less than assembly height.

2B. **Framing Members* - Steel Studs —** (As an alternate to Item 2, For use with Items 5C, 5I or 5K) - Proprietary channel shaped studs, 3-5/8 in. deep spaced a max of 24 in. OC. Studs to be cut 3/4 in less than the assembly height and installed with a 1/2 in. gap between the end of the stud and track at the bottom of the wall. For direct attachment of gypsum board only.

CALIFORNIA EXPANDED METAL PRODUCTS CO — Viper25™

CRACO MFG INC — SmartStud25™

MARINO/WARE, DIV OF WARE INDUSTRIES INC — Viper25™

PHILLIPS MFG CO L L C — Viper25™

2C. **Framing Members* - Steel Studs —** Not shown - In lieu of Item 2 — proprietary channel shaped steel studs, min depth as indicated under Item 5, spaced a max of 24 in. OC, fabricated from min 0.020 in. thick galv steel. Studs cut 3/8 in. to 3/4 in. less in lengths than assembly heights.

CALIFORNIA EXPANDED METAL PRODUCTS CO — Viper20™

MARINO/WARE, DIV OF WARE INDUSTRIES INC — Viper20™

PHILLIPS MFG CO L L C — Viper20™

2D. **Framing Members*— Steel Studs —** In lieu of Item 2 - Channel shaped studs, min depth as indicated under Item 5, spaced a max of 24 in. OC. Studs to be cut 3/4 in. less than assembly height.

ALLSTEEL & GYPSUM PRODUCTS INC — Type SUPREME Framing System

CONSOLIDATED FABRICATORS CORP, BUILDING PRODUCTS DIV — Type SUPREME Framing System

QUAIL RUN BUILDING MATERIALS INC — Type SUPREME Framing System

SCAFCO STEEL STUD MANUFACTURING CO — Type SUPREME Framing System

STEEL CONSTRUCTION SYSTEMS INC — Type SUPREME Framing System

UNITED METAL PRODUCTS INC — Type SUPREME Framing System

2E. **Framing Members* - Steel Studs —** (Not shown, As an alternate to Item 2) —For use with Items 5F or 5G or 5I only, channel shaped steel studs, min depth as shown under Item 5F, 5G or 5I, fabricated from min. 0.015 in. (min bare metal thickness) galvanized steel, spaced a max of 24 in. OC. Studs to be cut 3/4 in. less than assembly height.

CLARKDIETRICH BUILDING SYSTEMS — CD ProSTUD

DMFCWBS L L C — ProSTUD

MBA METAL FRAMING — ProSTUD

RAM SALES L L C — Ram ProSTUD

STEEL STRUCTURAL PRODUCTS L L C — Tri-S ProSTUD

2F. **Framing Members* - Steel Studs —** Not shown - In lieu of Item 2 — proprietary channel shaped steel studs, minimum width indicated under Item 5, 1-1/4 in. deep fabricated from min 0.015 in. (min bare metal thickness) galvanized steel. Studs 3/8 in. to 3/4 in. less in lengths than assembly heights.

SUPER STUD BUILDING PRODUCTS — The Edge

2G. **Framing Members* - Steel Studs —** Not shown - In lieu of Item 2 - proprietary channel shaped studs, minimum width indicated under Item 5. Studs to be cut 3/8 to 3/4 in less than the assembly height.

STUDCO BUILDING SYSTEMS — CROCSTUD

2H. **Framing Members*— Steel Studs —** (Not shown, As an alternate to Item 2) — Fabricated from min. 0.015 in. (min bare metal thickness) galvanized steel, spaced a max of 24 in. OC. Studs to be cut 3/4 in. less than assembly height.

TELLING INDUSTRIES L L C — TRUE-STUD™

2I. **Framing Members* - Steel Studs —** (As an alternate to Item 2, For use with Items 5C or 5I, or 5K) - Proprietary channel shaped studs, 3-5/8 in. deep spaced a max of 24 in. OC. Studs to be cut 3/4 in less than the assembly height and installed with a ½ in. gap between the end of the stud and track at the bottom of the wall. For direct attachment of gypsum board only.

TELLING INDUSTRIES L L C — Viper25™

2J. **Framing Members* - Metal Studs —** Not shown - In lieu of Item 2 — proprietary channel shaped steel studs, min depth as indicated under Item 5, spaced a max of 24 in. OC. fabricated from min 0.020 in. thick galv steel. Studs cut 3/8 in. to 3/4 in. less in lengths than assembly heights

TELLING INDUSTRIES L L C — Viper20™

2K. **Framing Members*— Steel Studs —** As an alternate to Item 2 - For use with Item 1, channel shaped studs, fabricated from min 25 MSG corrosion-protected steel, min depth as indicated under Item 5, spaced a max of 24 in. OC. Studs to be cut 3/8 to 3/4 in. less than assembly height.

EB METAL INC — EB Stud

2L. **Framing Members* — Steel Studs —** As an alternate to Item 2 - For use with Item 1, channel shaped studs, fabricated from min 25 MSG corrosion-protected steel, min depth as indicated under Item 5, spaced a max of 24 in. OC. Studs to be cut 3/8 to 3/4 in. less than assembly height.

OLNAR SUPPLY INC — PRIMESTUD

2M. **Framing Members* — Steel Studs —** As an alternate to Item 2 - For use with Item 1, channel shaped studs, fabricated from min 25 MSG corrosion-protected steel, min depth as indicated under Item 5, spaced a max of 24 in. OC. Studs to be cut 3/8 to 3/4 in. less than assembly height.

MARINO/WARE, DIV OF WARE INDUSTRIES INC — StudKote™

3. **Wood Structural Panel Sheathing —** (Optional, For use with Item 5 Only.) - (Not Shown) - 4 ft wide, 7/16 in. thick oriented strand board (OSB) or 15/32 in. thick structural 1 sheathing (plywood) complying with DOC PS1 or PS2, or APA Standard PRP-108, manufactured with exterior glue, applied horizontally or vertically to the steel studs. Vertical joints centered on studs, and staggered one stud space from wallboard joints. Attached to studs with flat-head self-drilling tapping screws with a min. head diam. of 0.292 in. at maximum 6 in. OC. in the perimeter and 12 in. OC. in the field. When used, fastener lengths for gypsum panels increased by min. 1/2 in.

4. **Batts and Blankets* —** (Required as indicated under Item 5) — Mineral wool batts, Friction fitted between studs and runners. Min nom thickness as indicated under Item 5. See **Batts and Blankets (BXRW or BZZZ) Categories** for names of Classified companies.

4A. **Batts and Blankets* —** (Optional) — Placed in stud cavities, any glass fiber or mineral wool insulation bearing the UL Classification Marking as to Surface Burning Characteristics and/or Fire Resistance. See **Batts and Blankets (BXRW or BZZZ) Categories** for names of Classified companies.

4B. **Batts and Blankets* —** For use with Item 5K. Placed in stud cavities, any min. 3-1/2 in. thick glass fiber insulation bearing the UL Classification Marking as to Surface Burning Characteristics and/or Fire Resistance. See **Batts and Blankets (BXRW or BZZZ) Categories** for names of Classified companies.

5. **Gypsum Board* —** Gypsum panels with beveled, square or tapered edges, applied vertically or horizontally. Vertical joints centered over studs and staggered one stud cavity on opposite sides of studs. Vertical joints in adjacent layers (multilayer systems) staggered one stud cavity. Horizontal joints need not be backed by steel framing. Horizontal edge joints and horizontal butt joints on opposite sides of studs need not be staggered. Horizontal edge joints and horizontal butt joints in adjacent layers (multilayer systems) staggered a min of 12 in. The thickness and number of layers for the 1 hr, 2 hr, 3 hr and 4 hr ratings are as follows:

Gypsum Board Protection on Each Side of Wall

Rating, Hr	Min Stud Depth, in. Items 2, 2C, 2D, 2F and 2G	No. of Layers & Thickness of Panel	Min Thkns of Insulation (Item 4)
1	3-1/2	1 layer, 5/8 in. thick	Optional
1	2-1/2	1 layer, 1/2 in. thick	1-1/2 in.
1	1-5/8	1 layer, 3/4 in. thick	Optional
2	1-5/8	2 layers, 1/2 in. thick	Optional
2	1-5/8	2 layers, 5/8 in. thick	Optional
2	3-1/2	1 layer, 3/4 in. thick	3 in.
3	1-5/8	3 layers, 1/2 in. thick	Optional
3	1-5/8	2 layers, 3/4 in. thick	Optional
3	1-5/8	3 layers, 5/8 in. thick	Optional
4	1-5/8	4 layers, 5/8 in. thick	Optional
4	1-5/8	4 layers, 1/2 in. thick	Optional
4	2-1/2	2 layers, 3/4 in. thick	2 in.

CGC INC — 1/2 in. thick Type C, IP-X2 or IPC-AR;, 5/8 in. thick Type AR, C, IP-AR, IP-X1, IP-X2, IPC-AR, SCX, SHX, WRX or WRC; 3/4 in. thick Types IP-X3 or ULTRACODE

UNITED STATES GYPSUM CO — 1/2 in. thick Type C, IP-X2, IPC-AR or IPC; 5/8 in. thick Type SCX, SGX, SHX, WRX, IP-X1, AR, C, WRC, FRX-G, IP-AR, IP-X2, IPC-AR ; 3/4 in. thick Types IP-X3 or ULTRACODE

USG MEXICO S A DE C V — 1/2 in. thick Type C, IP-X2, IPC-AR or IPC; 5/8 in. thick Type AR, C, IP-AR, IP-X1, IP-X2, IPC-AR, SCX, SHX, or; 3/4 in. thick Types IP-X3 or ULTRACODE

When Item 7B, Steel Framing Members*, is used, Nonbearing Wall Rating is limited to 1 Hr. Min. stud depth is 3-1/2 in., min. thickness of insulation (Item 4) is 3 in., and two layers of gypsum board panels (1/2 in. or 5/8 in. thick) shall be attached to furring channels as described in Item 6. One layer of gypsum board panels (1/2 in. or 5/8 in. thick) attached to opposite side of stud without furring channels as described in Item 6.

5A. **Gypsum Board* —** (As an alternate to Item 5) — 5/8 in. thick, 24 to 54 in. wide, applied horizontally as the outer layer to one side of the assembly. Secured as described in Item 6.

CGC INC — Type SHX.

UNITED STATES GYPSUM CO — Type FRX-G, SHX.

USG MEXICO S A DE C V — Type SHX.

5B. **Gypsum Board* —** (Not Shown) - As an alternate to Item 5 when used as the base layer on one or both sides of wall when 5/8 in or ¾ in. thick products are specified. For direct attachment only to steel studs Item 2A, (not to be used with Item 3) - Nom 5/8 in. or ¾ in. may be used as alternate to all 5/8 in. or ¾ in. shown in Item 5, Wallboard Protection and Item 6, Fastening. Nom ½ in. thick lead backed gypsum panels with beveled, square or tapered edges, applied vertically. Vertical joints centered over studs and staggered min 1 stud cavity on opposite sides of studs. Wallboard secured to studs with 1-1/4 in. long Type S-12 steel screws gypsum panel steel screws spaced 8 in. OC at perimeter and 12 in. OC in the field. Lead batten strips required behind vertical joints of lead backed gypsum wallboard and optional at remaining stud locations. Lead batten strips, min 2 in. wide, max 8 ft long with a max thickness of 0.14 in. Type S-8 pan head steel screws, one at the top of the strip and one at the bottom of the strip and one at the bottom of the strip and one at the bottom of the strip and one at the bottom of the strip and one at the bottom of the strip. Lead discs, nominal 3/8 in. diam by max 0.085 in. thick. Compression fitted or adhered over the screw heads. Lead batten strips and discs to have a purity of 99.9% meeting the Federal specification QQ-L-201f, Grade "C".

RADIATION PROTECTION PRODUCTS INC — Type RPP - Lead Lined Drywall

5K. **Gypsum Board* —** (Not Shown) - (As an alternate to Item 5) - Nom. 5/8 in. thick gypsum panels with beveled, square or tapered edges, applied vertically or horizontally. Vertical joints centered over studs and staggered one stud cavity on opposite sides of studs. Vertical joints in adjacent layers (multilayer systems) staggered one stud cavity. Horizontal joints need not be backed by steel framing. Horizontal edge joints and horizontal butt joints on opposite sides of studs need not be staggered. Horizontal edge joints and horizontal butt joints in adjacent layers (multilayer systems) need not be staggered. The number of layers for the 1 hr, 2 hr, 3 hr and 4 hr ratings are as follows:

Gypsum Board Protection on Each Side of Wall

Rating, Hr	Min Stud Depth, in. Items 2 through 2L	No. of Layers & Thkns of Panel	Min Thkns of Insulation (Item 4B)
1	3-5/8	1 layer, 5/8 in. thick	3-1/2 in.
2	1-5/8	2 layers, 5/8 in. thick	Optional
3	1-5/8	3 layers, 5/8 in. thick	Optional
4	1-5/8	4 layers, 5/8 in. thick	Optional

UNITED STATES GYPSUM CO — 5/8 in. thick Type ULIX

6. **Fasteners —** (Not shown) — For use with Items 2 and 2F - Type S or S-12 steel screws used to attach panels to studs (Item 2) or furring channels (Item 7). **Single layer systems:** 1 in. long for 1/2 and 5/8 in. thick panels or 1-1/4 in. long for 3/4 in. thick panels, spaced 8 in. OC. when panels are applied horizontally, or 9 in. OC along vertical and bottom edges and 12 in. OC in the field when panels are applied vertically. **Two layer systems:** First layer- 1 in. long for 1/2 and 5/8 in. thick panels or 1-1/4 in. long for 3/4 in. thick panels, spaced 16 in. OC. Second layer- 1-5/8 in. long for 1/2 in., 5/8 in. thick panels or 2-1/4 in. long for 3/4 in. thick panels, spaced 12 in. OC with screws offset 8 in. from first layer.**Three-layer systems:** First layer- 1 in. long for 1/2 in., 5/8 in. thick panels, spaced 24 in. OC. Second layer- 1-5/8 in. long for 1/2 in., 5/8 in. thick panels or 2-1/4 in. long for 3/4 in. thick panels, spaced 24 in. OC. Third layer- 2-1/4 in. long for 1/2 in., 5/8 in. thick panels or 2-5/8 in. long for 5/8 in. thick panels, spaced 12 in. OC. Screws offset min 6 in. from layer below. **Four-layer systems:** First layer- 1 in. long for 1/2 in., 5/8 in. thick panels, spaced 24 in. OC. Second layer- 1-5/8 in. long for 1/2 in., 5/8 in. thick panels, spaced 24 in. OC. Third layer- 2-1/4 in. long for 1/2 in. thick panels or 2-5/8 in. long for 5/8 in. thick panels, spaced 24 in. OC. Fourth layer- 2-5/8 in. long for 1/2 in. thick panels or 3 in. long for 5/8 in. thick panels, spaced 12 in. OC. Screws offset min 6 in. from layer below.

6A. **Fasteners —** (Not shown) - For use with Item 5K- Type S or S-12 steel screws used to attach panels to studs or furring channels (Item 7). Single layer systems: 1 in. long screws, spaced 8 in. OC when panels are applied horizontally, or 8 in. OC along vertical and bottom edges and 12 in. OC in the field when panels are applied vertically. **Two layer systems:** First layer- 1 in. long screws, spaced 16 in. OC. Second layer- 1-5/8 in. long screws, spaced 8 in. OC. with screws offset 8 in. from First layer. Three-layer systems: First layer- 1 in. long screws, spaced 24 in. OC. Second layer- 1-5/8 in. long screws, spaced 24 in. OC. Third layer- 2-5/8 in. long screws, spaced 8 in. OC. Screws offset min 6 in. from layer below. Four-layer systems: First layer- 1 in. long screws, spaced 24 in. OC. Second layer- 1-5/8 in. long screws, spaced 24 in. OC. Third layer- 2-5/8 in. long screws, spaced 24 in. OC. Second layer- 1-5/8 in. long screws, spaced 24 in. OC. Third layer- 2-5/8 in. long screws, spaced 8 in. OC. Screws offset min 6 in. from layer below.

7. **Furring Channels —** (Optional, not shown, for single or double layer systems) — Resilient furring channels fabricated from min 25 MSG corrosion-protected steel, spaced vertically a max of 24 in. OC. Flange portion attached to each intersecting stud with 1/2 in. long Type S-12 steel screws. Not for use with Item 5A and 5E.

7A. **Framing Members* —** (Optional on one or both sides, not shown, for single or double layer systems) — As an alternate to Item 7, furring channels and Steel Framing Members as described below:

a. **Furring Channels —** Formed of No. 25 MSG galv steel, 2-9/16 in. or 2-23/32 in. wide by 7/8 in. deep, spaced max. 24 in. OC perpendicular to studs. Channels secured to studs as described in Item b. Gypsum board attached to furring channels as described in Item 6. Not for use with Item 5A and 5E.

b. **Steel Framing Members* —** Used to attach furring channels (Item 7Aa) to studs (Item 2). Clips spaced max. 48 in. OC. RSIC-1 and RSIC-1 (2.75) clips secured to studs with No. 8 x 1-1/2 in. minimum self-drilling, S-12 steel screw through the center grommet. RSIC-V and RSIC-V (2.75) clips secured to studs with No. 8 x 9/16 in. minimum self-drilling, S-12 steel screw through the center hole. Furring channels are friction fitted into clips. RSIC-1 and RSIC-V clips for use with 2-9/16 in. wide furring channels. RSIC-1 (2.75) and RSIC-V (2.75) clips for use with 2-23/32 in. wide furring channels.

PAC INTERNATIONAL INC — Types RSIC-1, RSIC-V, RSIC-1 (2.75), RSIC-V (2.75).

7B. **Framing Members* —** (Optional, Not Shown) — As an alternate to Item 7, for single or double layer systems, furring channels and Steel Framing Members on only one side of studs as described below:

a. **Furring Channels —** Formed of No. 25 MSG galv steel, spaced 24 in. OC perpendicular to studs. Channels secured to studs as described in Item b. Batts and Blankets placed in stud cavity as described in Item 5. Two layers of gypsum board attached to furring channels as described in Item 5. Not for use with Item 5A and 5E.

b. **Steel Framing Members* —** Used to attach furring channels (Item 7Ba) to one side of studs (Item 2) only. Clips spaced 48 in. OC., and secured to studs with two No. 8 x 2-1/2 in. coarse drywall screws, one through the hole at each end of the clip. Furring channels are friction fitted into clips.

KINETICS NOISE CONTROL INC — Type Isomax

7C. **Framing Members* —** (Not Shown) — (Optional on one or both sides, not shown, for single or double layer systems) — As an alternate to Item 7, furring channels and Steel Framing Members as described below:

a. **Furring Channels —** Formed of No. 25 MSG galv steel. 2-3/8 in. wide by 7/8 in. deep, spaced max. 24 in. OC perpendicular to studs. Channels secured to studs as described in Item b. Gypsum board attached to furring channels as described in item 6. Not for use with Item 5A and 5E.

b. **Steel Framing Members* —** Used to attach furring channels (Item 7Aa) to studs (Item 2). Clips spaced max. 48 in. OC. GENIECLIPS secured to studs with No. 8 x 1-1/2 in. minimum self-drilling, S-12 steel screw through the center grommet. Furring channels are friction fitted into clips.

UL-U419 (CONT.):

RAY-BAR ENGINEERING CORP — Type RB-LBG

5C. **Gypsum Board* —** (For Use With Item 2B) Rating Limited to 1 Hour. 5/8 in. thick, 48 in. wide, Gypsum panels with beveled, square or tapered edges, applied vertically or horizontally. (Vertical Application) - The gypsum panel is to be installed with the long dimension at right angles to the studs. Screws are spaced 8 in. OC. at the perimeter and 12 in. OC. in the field. The edge of the board at the vertical edges and 12 in. OC starting 4 in. from the edge of the board at the center of each board. Gypsum boards are to be secured to the top and bottom track with screws spaced 8 in. OC starting 4 in. from the board edge. Fasteners shall not penetrate through both the stud and the track at the same time. Vertical joints are to be centered over studs and staggered one stud cavity on opposite sides of studs. (Horizontal Application) - The gypsum panel is to be installed with the long dimension parallel to the studs. Screws are spaced 8 in. OC. at the perimeter and 12 in. OC. in the field. The edge of the board at the vertical edges and 12 in. OC starting 4 in. from the edge of the board at the center of each board. Gypsum boards are to be secured to the top and bottom track with screws spaced 8 in. OC starting 4 in. from the board edge. Fasteners shall not penetrate through both the stud and the track at the same time. All horizontal joints are to be backed as outlined under section VI of Volume 1 in the Fire Resistive Directory.

CGC INC — Type SCX.

UNITED STATES GYPSUM CO — Type SCX, SGX.

USG MEXICO S A DE C V — Type SCX.

5D. **Gypsum Board* —** (As an alternate to Item 5) — 5/8 in. thick, 48 in. wide, applied vertically or horizontally. Secured as described in Item 6. For use with Items 1 and 2 only.

CGC INC — Type USGX.

UNITED STATES GYPSUM CO — Type USGX.

USG MEXICO S A DE C V — Type USGX.

5E. **Gypsum Board* —** (Not Shown) - (As an alternate to Item 5 when used as the base layer on one or both sides of wall when 1/2 in. or 5/8 in thick products are specified. For direct attachment only to steel studs Item 2A, not to be used with Item 3). Nominal 5/8 in. thick lead backed gypsum panels with beveled, square or tapered edges, applied vertically. Vertical joints centered over studs and staggered min 1 stud cavity on opposite sides of studs. Wallboard secured to studs with 1-1/4 in. long Type S-12 steel screws gypsum panel steel screws spaced 8 in. OC at perimeter and 12 in. OC in the field. Lead batten strips required behind vertical joints of lead backed gypsum wallboard (Item 5B) and optional at remaining stud locations. Required batten vertical joints.

11A. **Lead Batten Strips —** (Not Shown, For Use With Item 5H) Lead batten strips, 2 in. wide, max 10 ft long with a max thickness of 0.125 in. Strips placed on the face of studs and attached to the stud with two min. 1 in. long min. Type S-8 pan head steel screws, one at the top of the strip and one at the bottom of the strip or with one min. 1 in. long min. Type S-8 pan head steel screw at the top of the strip. Lead batten strips to have a purity of 99.9% meeting the Federal specification QQ-L-201f, Grades "B, C or D". Lead batten strips required behind vertical joints of lead backed gypsum wallboard and optional at remaining stud locations.

12. **Lead Discs or Tabs —** (Not Shown, For Use With Item 5B) - Lead in lieu of or in addition to the lead batten strips (Item 11) or optional at other locations - Max 3/4 in. diam by max 0.125 in. thick lead discs compression fitted or adhered over steel screw heads or max 1/2 in. by 1-1/4 in. by max 0.125 in. thick lead tabs placed on gypsum boards (Item 5B) underneath screw locations prior to the installation of the screws. Lead discs or tabs to have a purity of 99.9% meeting the Federal specification QQ-L-201f, Grade "C".

12A. **Lead Discs —** (Not Shown, for use with Item 5H) Max 5/16 in. diam by max 0.140 in. thick lead discs compression fitted or adhered over steel screw heads. Lead discs to have a purity of 99.9% meeting the Federal Specification QQ-L-201f, Grades "B, C or D".

13. **Lead Batten Strips —** (Not Shown, For Use With Item 5E) Lead batten strips, 2 in. wide, max 10 ft long with a max thickness of 0.142 in. Strips placed on the face of studs and attached to the stud with two min. 1 in. long min. Type S-8 pan head steel screws, one at the top of the strip and one at the bottom of the strip or with one min. 1 in. long min. Type S-8 pan head steel screw at the top of the strip. Lead batten strips to have a purity of 99.9% meeting the Federal specification QQ-L-201f, Grades "B, C or D". Lead batten strips required behind vertical joints of lead backed gypsum wallboard (Item 5E) and optional at remaining stud locations.

14. **Lead Tabs —** (Not Shown, For Use With Item 5E) 2 in. wide, 5 in. long with a max thickness of 0.142 in. Tabs friction-fit around front face of stud, the stud folded back flange, and the back face of the stud. Tabs required at each screw location. Lead tabs to have a purity of 99.9% meeting the Federal specification QQ-L-201f, Grade "C". Lead tabs may be held in place with standard adhesive tape if necessary.

*** Indicates such products shall bear the UL or cUL Certification Mark for jurisdictions employing the UL or cUL Certification (such as Canada), respectively.**

Last Updated on 2015-05-28

Questions? Print this page Terms of Use Page Top

UL-U499:

UL Product iQ™

BXUVU.U499 - Fire-resistance Ratings - ANSI/UL 263

Design/System/Construction/Assembly Usage Disclaimer

- Authorities Having Jurisdiction should be consulted in all cases as to the particular requirements covering the installation and use of UL Certified products, equipment, system, devices, and materials.
- Authorities Having Jurisdiction should be consulted before construction.
- Fire resistance assemblies and products are developed by the design submitter and have been investigated by UL for compliance with applicable requirements. The published information cannot always address every construction nuance encountered in the field.
- When field issues arise, it is recommended the first contact for assistance be the technical service staff provided by the product manufacturer noted for the design. Users of fire resistance assemblies are advised to consult the general Guide Information for each product category and each group of assemblies. The Guide Information includes specifics concerning alternate materials and alternate methods of construction.
- Only products which bear UL's Mark are considered Certified.

BXUV - Fire Resistance Ratings - ANSI/UL 263 Certified for United States

BXUV7 - Fire Resistance Ratings - CAN/ULC-S101 Certified for Canada

See General Information for Fire-resistance Ratings - ANSI/UL 263 Certified for United States
Design Criteria and Allowable Variances

See General Information for Fire Resistance Ratings - CAN/ULC-S101 Certified for Canada
Design Criteria and Allowable Variances

Design No. U499

October 02, 2019

Nonbearing Wall Rating — 1 Hr.

*** Indicates such products shall bear the UL or cUL Certification Mark for jurisdictions employing the UL or cUL Certification (such as Canada), respectively.**

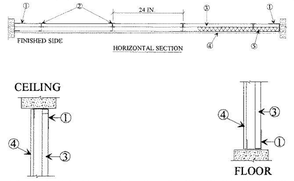

1. **Channel Track —** "I" -shaped channel, 2-1/2 in. deep with unequal legs of 1 in. and 2 in., fabricated from No. 25 MSG galv steel. Channels attached to structural supports with steel fasteners located not greater than 2 in. from ends and not greater than 24 in. OC.

2. **Steel Studs —** "I" -shaped studs, min 2-1/2 in. deep by 1-1/2 in. wide, fabricated from min 25 MSG galv steel, spaced 24 in. OC. Vertically restrained walls require studs to be cut 1/2 in. less than floor to ceiling height.

2A. **Steel Studs —** (Not Shown) — "C-H" -shaped studs, min 2-1/2 in. deep by 1-1/2 in. wide, fabricated from min 25 MSG galv steel, spaced 24 in. OC. Vertically restrained walls require studs to be cut 1/2 in. less than floor to ceiling height.

2B. **Steel Studs —** (Not Shown) — "C-T" - shaped studs, min 2-1/2 in. deep by 1-1/2 in. wide, fabricated from min 25 MSG galv steel, spaced 24 in. OC. Vertically restrained walls require studs to be cut 1/2 in. less than floor to ceiling height.

2C. **Furring Channels —** (Optional, not shown) - Resilient furring channels fabricated from min. 25 MSG corrosion protected steel, installed horizontally, and spaced vertically a max. 24 in. OC. Flange portion of channel attached to each intersecting stud on side of stud opposite the 1 in. liner panels with 1/2 in. long Type S or S-12 pan-head steel screws. When furring channels are used, wallboard to be installed vertically only.

3. **Gypsum Board* —** 1 in. thick gypsum wallboard liner panels, supplied in nominal 24 in. widths. Vertical edges inserted in "I" studs. Free edge of end panels attached to long leg of "I" runners with 1-5/8 in. long Type S self-drilling, self-tapping bugle head steel screws spaced not greater than 24 in. OC.
**NATIONAL GY

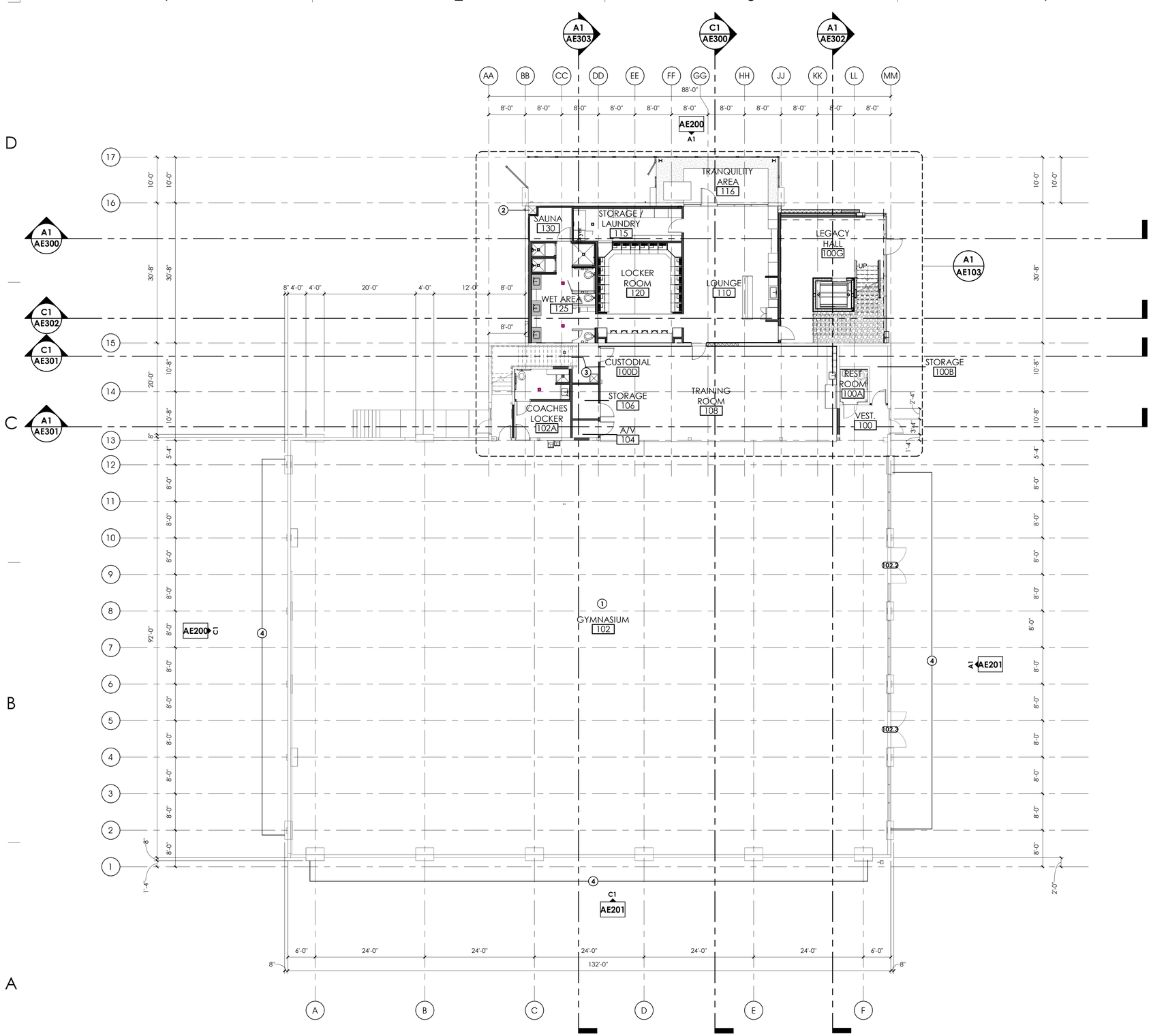

A1 OVERALL FLOOR PLAN - LEVEL 01

3/32" = 1'-0"

SCALE : 3/32" = 1'-0"

GENERAL NOTES:

- SEE SHEET GI003 FOR GENERAL NOTES LEGENDS AND ABBREVIATIONS.
- SEE GI002 FOR DRAWING INDEX.
- DO NOT SCALE DRAWINGS.
- CONTRACTOR / SUBCONTRACTOR SHALL VERIFY ALL DIMENSIONS AND CONDITIONS BEFORE BEGINNING WORK, AND SHALL REPORT TO THE ARCHITECT ANY ERRORS, INCONSISTENCIES OR OMISSIONS BEFORE BEGINNING WORK. SEE GENERAL NOTES AND SPECIFICATIONS.

KEYED NOTES:

1 EXISTING GYMNASIUM AREA TO REMAIN. PROTECT.
2 EXISTING ROOF DRAIN LINE DROP. PROTECT.
3 RELOCATED ENTRY TO FIRE RISER ROOM. CASED OPENING. NO DOOR.
4 EXISTING EXTERIOR WALLS, DOORS, AND WINDOWS TO REMAIN. PROTECT.

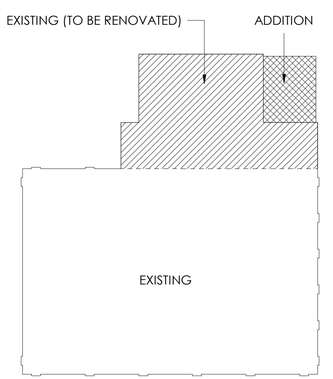

KEY PLAN

ARCHITECT 1877
ajc architects
703 east 1700 south
salt lake city, utah 84105
ph: 801.466.8818
fx: 801.466.4411
www.ajcarchitects.com

ARCHITECT / CONSULTANT

STATE OF UTAH
KENT B. RIGBY
No. 135090
05.18.2020
LICENSED ARCHITECT

OWNER INFORMATION

PROJECT DESCRIPTION

DUMKE GYMNASTICS TRAINING CENTER

1825 E. SOUTH CAMPUS DRIVE
SALT LAKE CITY, UT 84112

AHJ STAMP

SHEET NAME:

OVERALL FLOOR PLAN - LEVEL 01

REVISIONS

MARK	DATE	DESCRIPTION

ISSUE DATA

ISSUE DATE:	10.18.21
ISSUE TYPE:	CD
DRAWN BY:	AT|DG
CHECKED BY:	KR
PROJECT#:	1877

SHEET NUMBER:

AE101

10/18/2021 4:28:52 PM S:\ajc users\taylor\Revit Local Files\21 0928 - 1877 - Dumke Womens Gymnastics Facility V20_detached_ataylorUV6V2.rvt
ALL IDEAS, DESIGNS, ARRANGEMENTS AND PLANS INDICATED OR REPRESENTED BY THIS DRAWING ARE OWNED BY AND THE PROPERTY OF AJC ARCHITECTS PC AND WERE CREATED, EVOLVED, AND DEVELOPED FOR USE ON AND IN CONNECTION WITH THE SPECIFIED PROJECT. NONE OF THE IDEAS, DESIGNS, ARRANGEMENTS OR PLANS SHALL BE USED BY OR DISCLOSED TO ANY PERSON, FIRM, OR CORPORATION FOR ANY PURPOSE WHATSOEVER WITHOUT WRITTEN CONSENT OF AJC ARCHITECTS PC. WRITTEN DIMENSIONS ON THESE DRAWINGS SHALL HAVE PRECEDENCE OVER SCALE DIMENSIONS. CONTRACTORS SHALL VERIFY AND BE RESPONSIBLE FOR ALL DIMENSIONS AND CONDITIONS ON THE JOB AND THIS OFFICE MUST BE NOTIFIED OF ANY VARIATION FROM THE DIMENSIONS AND CONDITIONS SHOWN BY THESE DRAWINGS. WARNING: REPRODUCTION HEREOF IS A CRIMINAL OFFENSE UNDER 18 U.S.C. 506. UNAUTHORIZED DISCLOSURE MAY CONSTITUTE TRADE SECRET MISAPPROPRIATION IN VIOLATION OF 12-24-2-311.1 ET. SEQ. AND OTHER LAWS.

10/18/2021 4:28:55 PM S:\ajc users\taylor\Revit Local Files\21 0928 - 1877 - Dumke Womens Gymnastics Facility V20_detached_ataylorUV5V2.rvt

ALL IDEAS, DESIGNS, ARRANGEMENTS AND PLANS INDICATED OR REPRESENTED BY THIS DRAWING ARE OWNED BY, AND THE PROPERTY OF AJC ARCHITECTS PC, AND WERE CREATED, EVOLVED, AND DEVELOPED FOR USE ON, AND IN CONNECTION WITH THE SPECIFIED PROJECT. NONE OF THE IDEAS, DESIGNS, ARRANGEMENTS OR PLANS INDICATED OR REPRESENTED BY THIS DRAWING OR OTHER DOCUMENTS PREPARED BY AJC ARCHITECTS PC, MAY BE USED BY OR DISCLOSED TO ANY PERSON, FIRM, OR CORPORATION FOR ANY PURPOSE WHATSOEVER WITHOUT WRITTEN CONSENT OF AJC ARCHITECTS PC. WRITTEN DIMENSIONS ON THESE DRAWINGS SHALL HAVE PRECEDENCE OVER SCALE DIMENSIONS. CONTRACTORS SHALL VERIFY AND BE RESPONSIBLE FOR ALL DIMENSIONS AND CONDITIONS ON THE JOB AND THIS OFFICE MUST BE NOTIFIED OF ANY VARIATION FROM THE DIMENSIONS AND CONDITIONS SHOWN BY THESE DRAWINGS. WARNING: REPRODUCTION HEREOF IS A CRIMINAL OFFENSE UNDER 18 U.S.C. 506, UNAUTHORIZED DISCLOSURE MAY CONSTITUTE TRADE SECRET MISAPPROPRIATION IN VIOLATION OF 17 U.S.C. § 1301 ET. SEQ. AND OTHER LAWS.

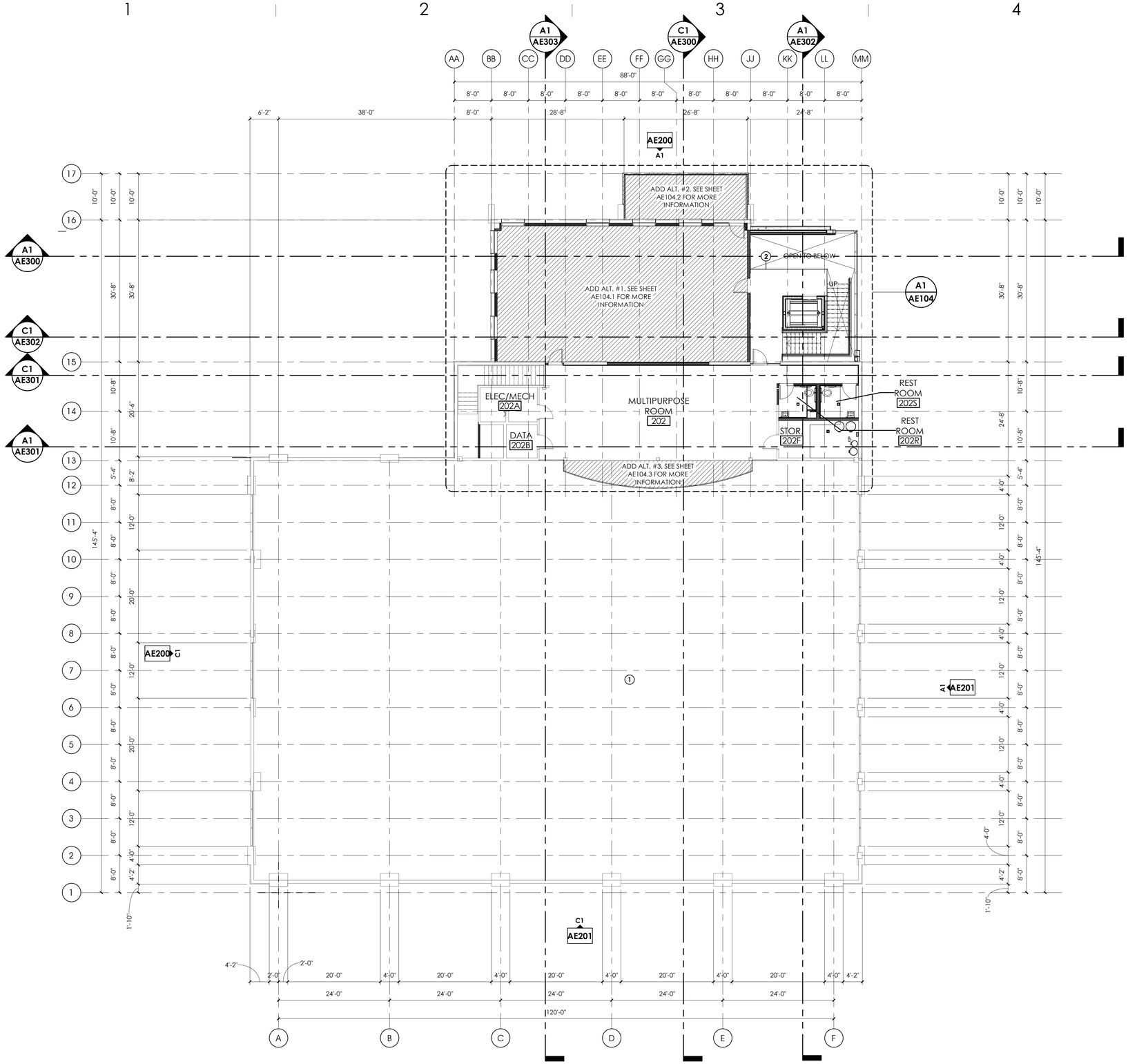

GENERAL NOTES AND LEGEND:

- SEE SHEET GI003 FOR GENERAL NOTES LEGENDS AND ABBREVIATIONS.
- SEE GI002 FOR DRAWING INDEX.
- DO NOT SCALE DRAWINGS.
- CONTRACTOR / SUBCONTRACTOR SHALL VERIFY ALL DIMENSIONS AND CONDITIONS BEFORE BEGINNING WORK, AND SHALL REPORT TO THE ARCHITECT ANY ERRORS, INCONSISTENCIES OR OMISSIONS BEFORE BEGINNING WORK. SEE GENERAL NOTES AND SPECIFICATIONS.

KEYED NOTES:

1 EXISTING GYMNASIUM AREA TO REMAIN. PROTECT.
2 NEW GLASS GUARDRAIL.

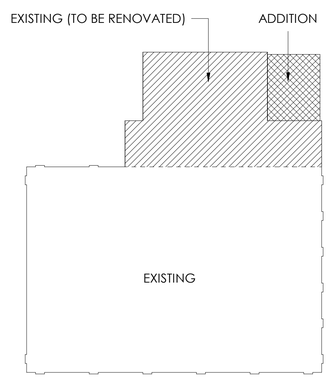

KEY PLAN

A1 **OVERALL FLOOR PLAN - LEVEL 02**
3/32" = 1'-0"

0' 5'-4" 10'-8" 21'-4" 32'-0"
SCALE : 3/32" = 1'-0"

ARCHITECT 1877
ajc architects
703 east 1700 south
salt lake city, utah 84105
ph: 801.466.8818
fx: 801.466.4411
www.ajcarchitects.com

ARCHITECT / CONSULTANT

STATE OF UTAH
KENT B. RIGBY
No. 135090
05.18.2020
LICENSED ARCHITECT

OWNER INFORMATION

PROJECT DESCRIPTION

DUMKE GYMNASTICS TRAINING CENTER
1825 E. SOUTH CAMPUS DRIVE
SALT LAKE CITY, UT 84112

AHJ STAMP

SHEET NAME:
OVERALL FLOOR PLAN - LEVEL 02

REVISIONS

MARK	DATE	DESCRIPTION

ISSUE DATA

ISSUE DATE:	10.18.21
ISSUE TYPE:	CD
DRAWN BY:	AT|DG
CHECKED BY:	KR
PROJECT#:	1877

SHEET NUMBER:
AE102

GENERAL NOTES:

- SEE SHEET GI003 FOR GENERAL NOTES LEGENDS AND ABBREVIATIONS.
- SEE GI002 FOR DRAWING INDEX.
- DO NOT SCALE DRAWINGS.
- CONTRACTOR / SUBCONTRACTOR SHALL VERIFY ALL DIMENSIONS AND CONDITIONS BEFORE BEGINNING WORK, AND SHALL REPORT TO THE ARCHITECT ANY ERRORS, INCONSISTENCIES OR OMISSIONS BEFORE BEGINNING WORK. SEE GENERAL NOTES AND SPECIFICATIONS.

KEYED NOTES:

1 EXISTING ROOF DRAIN LINE DROP. PROTECT.
2 EXISTING ATLAS BRICK WALL TO REMAIN. PROTECT.
3 EXISTING INTERIOR WALLS TO REMAIN. PROTECT. REPAINT.
4 LOCKERS.
5 EXISTING STEEL COLUMN TO REMAIN. PROTECT. PAINT.
6 EXISTING CONCRETE COLUMN TO REMAIN. PROTECT.
7 STRUCTURAL STEEL COLUMN, SEE STRUCTURAL DRAWINGS. PAINT.
8 NEW BI-LEVEL DRINKING FOUNTAIN.
9 HOSE BIB, SEE PLUMBING DRAWINGS.
10 FIRE ALARM PANEL. SEE FIRE ALARM DRAWINGS.
11 NEW SERVICE SINK, SEE PLUMBING PLAN.
12 MODULAR WELDED WIRE PLANT SUPPORT SYSTEM. SEE SPECIFICATIONS.
13 STONE WALKWAY. SEE SPECIFICATIONS.
14 NEW STRUCTURAL ATLAS BRICK TO MATCH EXISTING; SEE STRUCTURAL DRAWINGS.
15 CUSTOM GATE TO MATCH WELDED WIRE PLANT SUPPORT SYSTEM.
16 SINK AND FAUCET, SEE PLUMBING DRAWINGS.
17 BUILT-IN SAUNA KIT IS ADD ALT. #4.
18 CASEWORK. SEE INTERIOR ELEVATIONS AND FINISH SCHEDULE.
19 FIELD VERIFY CONDITIONS FOR MIRROR LOCATIONS. ALL MIRROR TO BE CENTERED ON PLUMBING FIXTURE.COORDINATE MIRROR SIZES WITH ELECTRICAL LIGHT FIXTURE LOCATIONS AND SIZES.COORDINATION REQUIRED WITH ELECTRICAL.
20 RAIN WATER LEADER
21 REINFORCED GRAVEL. SEE CIVIL DRAWINGS.
22 EXISTING DOWNSPOUT NOZZLE.
23 EXISTING FIRE RISER, SEE MECHANICAL DRAWINGS.
24 FUTURE PLANTINGS TO BE ADDED BY OWNER.
25 NO ACOUSTICAL BATT INSULATION REQUIRED IN THIS WALL.
26 MOP HOLDER AND SHELF, SEE ACCESSORY SCHEDULE.
27 CARD READER LOCATION.
28 ADA OPENER AND CARD READER LOCATION.
29 ADA ROLL IN SHOWER.
30 ADA WEIGHTED SHOWER CURTAIN.

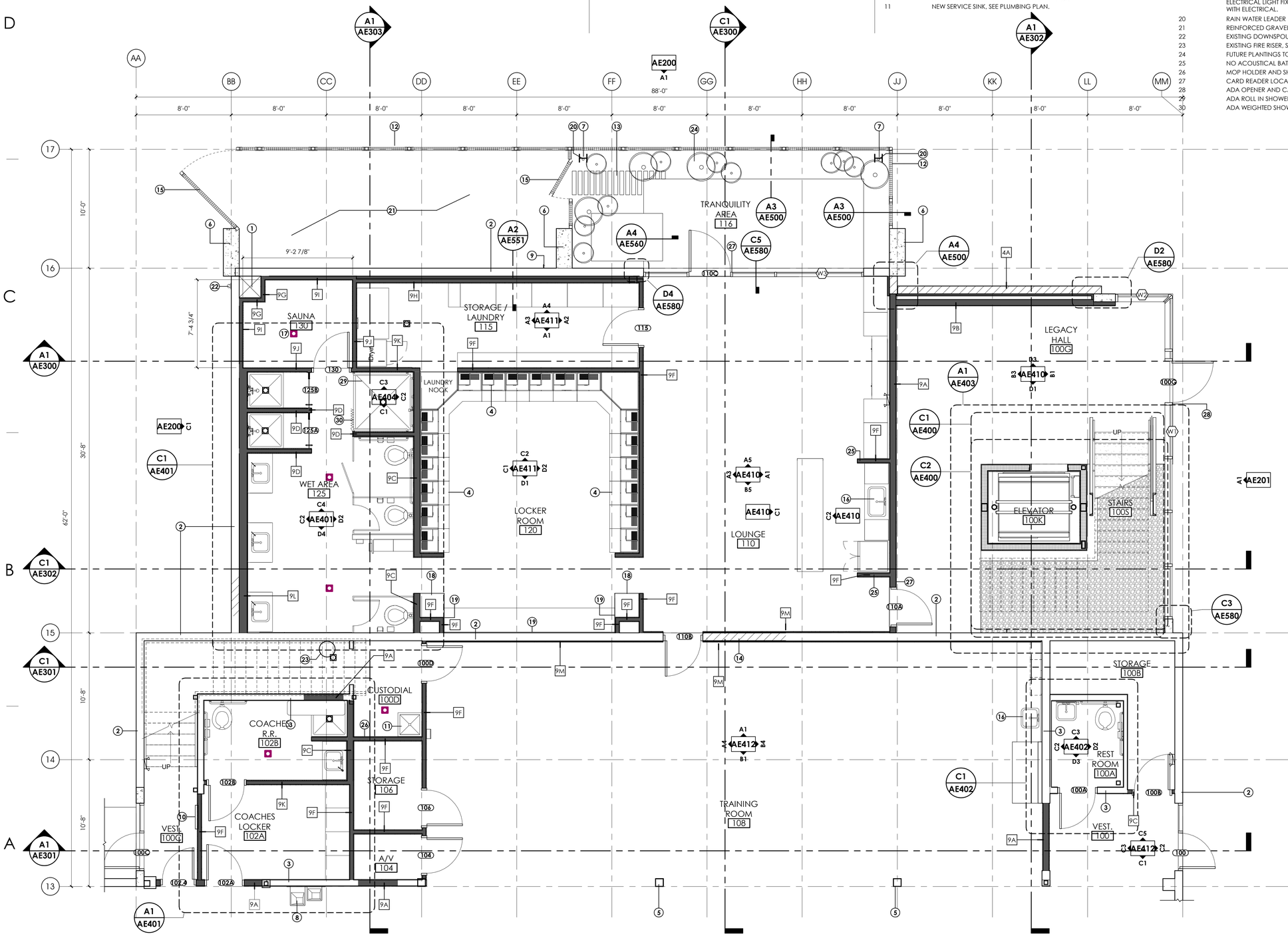

A1 PARTIAL ANNOTATED FLOOR PLAN - LEVEL 01
1/4" = 1'-0"

SCALE : 1/4" = 1'-0"

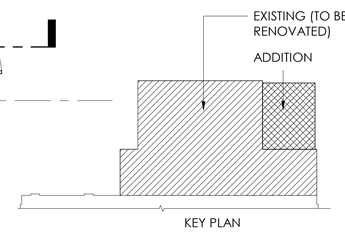

ARCHITECT 1877
ajc architects
703 east 1700 south
salt lake city, utah 84105
ph: 801.466.8818
fx: 801.466.4411
www.ajcarchitects.com

ARCHITECT / CONSULTANT

STATE OF UTAH
KENT B. RIGBY
No. 135090
05.18.2020
LICENSED ARCHITECT

OWNER INFORMATION

PROJECT DESCRIPTION

DUMKE GYMNASTICS TRAINING CENTER

1825 E. SOUTH CAMPUS DRIVE
SALT LAKE CITY, UT 84112

AHJ STAMP

SHEET NAME:
PARTIAL ANNOTATED FLOOR PLAN - LEVEL 01

REVISIONS

MARK	DATE	DESCRIPTION

ISSUE DATA

ISSUE DATE:	10.18.21
ISSUE TYPE:	CD
DRAWN BY:	AT|DG
CHECKED BY:	KR
PROJECT#:	1877

SHEET NUMBER:
AE103

10/18/2021 4:28:57 PM S:\ajc users\taylori\Revit Local Files\21 0928 - 1877 - Dumke Womens Gymnastics Facility V20_detached_taylorIJV5V2.rvt
ALL IDEAS, DESIGNS, ARRANGEMENTS AND PLANS INDICATED OR REPRESENTED BY THIS DRAWING ARE OWNED BY AND THE PROPERTY OF AJC ARCHITECTS PC AND WERE CREATED, EVOLVED AND DEVELOPED FOR USE ON AND IN CONNECTION WITH THE SPECIFIED PROJECT. NONE OF THE IDEAS, DESIGNS, ARRANGEMENTS OR PLANS INDICATED OR REPRESENTED BY THIS DRAWING MAY BE USED BY OR DISCLOSED TO ANY PERSON, FIRM, OR CORPORATION FOR ANY PURPOSE WHATSOEVER WITHOUT WRITTEN CONSENT OF AJC ARCHITECTS PC. WRITTEN DIMENSIONS ON THESE DRAWINGS SHALL HAVE PRECEDENCE OVER SCALE DIMENSIONS. CONTRACTORS SHALL VERIFY AND BE RESPONSIBLE FOR ALL DIMENSIONS AND CONDITIONS ON THE JOB AND THE OFFICE MUST BE NOTIFIED OF ANY VARIATION FROM THE DIMENSIONS AND CONDITIONS SHOWN BY THESE DRAWINGS. WARNING: REPRODUCTION HEREOF IS A CRIMINAL OFFENSE UNDER 18 U.S.C. 506. UNAUTHORIZED DISCLOSURE MAY CONSTITUTE TRADE SECRET MISAPPROPRIATION IN VIOLATION OF UC 24.2.3.1.1 ET. SEQ. AND OTHER LAWS.

GENERAL NOTES:

- SEE SHEET GI003 FOR GENERAL NOTES LEGENDS AND ABBREVIATIONS.
- SEE GI002 FOR DRAWING INDEX.
- DO NOT SCALE DRAWINGS.
- CONTRACTOR / SUBCONTRACTOR SHALL VERIFY ALL DIMENSIONS AND CONDITIONS BEFORE BEGINNING WORK, AND SHALL REPORT TO THE ARCHITECT ANY ERRORS, INCONSISTENCIES OR OMISSIONS BEFORE BEGINNING WORK. SEE GENERAL NOTES AND SPECIFICATIONS.

KEYED NOTES:

1	EXISTING CONCRETE BEAM.
2	EXISTING INTERIOR WALLS TO REMAIN. PROTECT. REPAINT.
3	NEW GLASS GUARDRAIL.
4	EXISTING CONCRETE COLUMN TO REMAIN. PROTECT.
5	EXISTING STEEL COLUMN TO REMAIN. PROTECT. PAINT.
6	WALL BRACKET DEMO. PATCH AND REPAIR.
7	EXPOSED RAILING BASE PLATE HOLES PATCH & REPAIR.
8	WALL/BEAM DEMO PATCH & REPAIR.
9	PATCH AND REPAIR WALL AFTER SHELVING DEMO. REPAINT.
10	RECESSED FIRE EXTINGUISHER CABINET
11	PATCH & REPAIR EXISTING WALL AFTER EXISTING BEAM DEMOLITION. SEE SPECIFICATIONS.
12	NEW SUSPENDED SLAB.
13	NO GYP. ON INSIDE OF WALL.

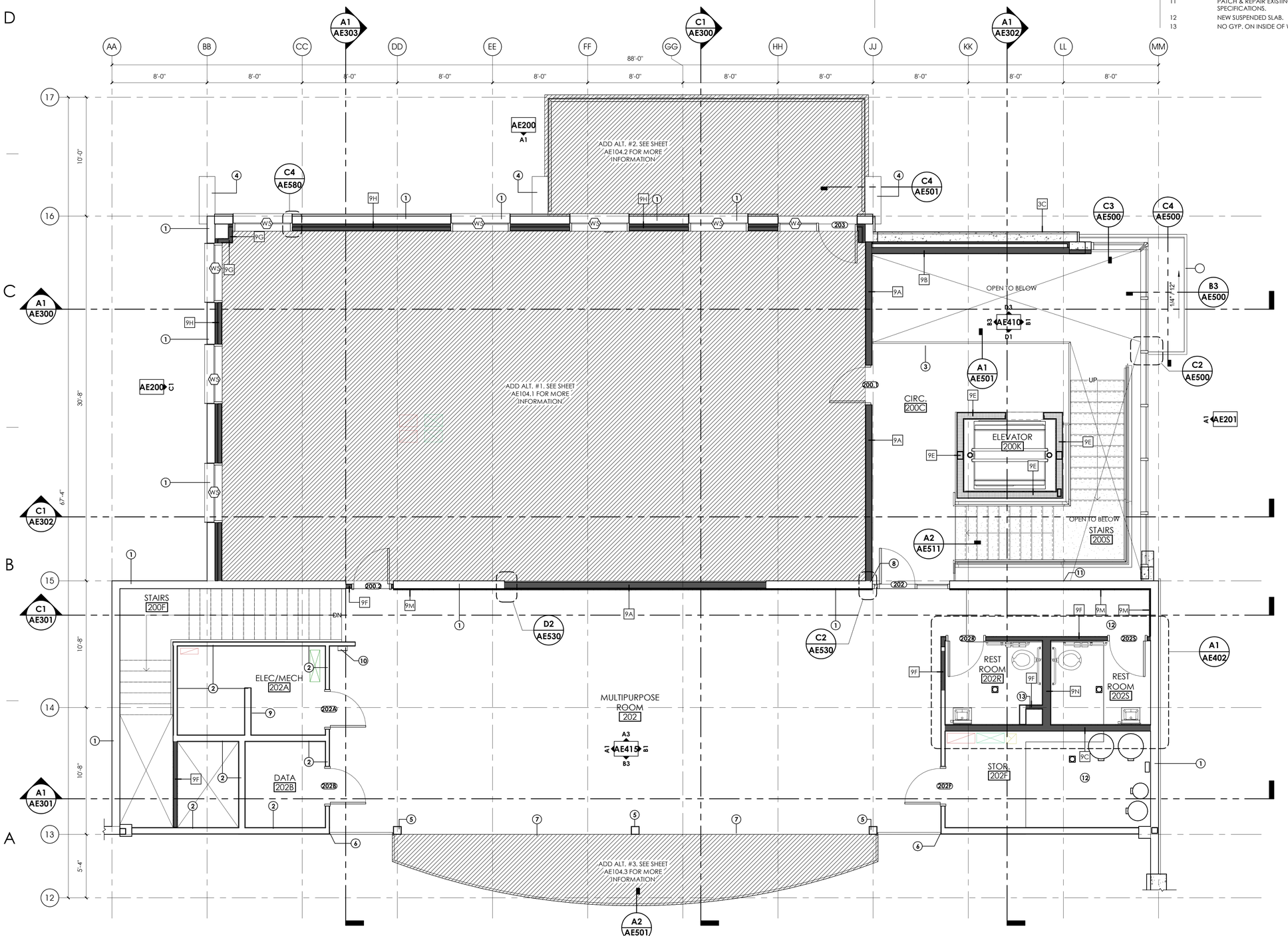

A1 PARTIAL ANNOTATED FLOOR PLAN - LEVEL 02
1/4" = 1'-0"

SCALE : 1/4" = 1'-0"

ARCHITECT 1877

ajc architects

703 east 1700 south
salt lake city, utah 84105
ph: 801.466.8818
fx: 801.466.4411
www.ajcarchitects.com

ARCHITECT / CONSULTANT

STATE OF UTAH
KENT B. RIGBY
No. 135090
05.18.2020
LICENSED ARCHITECT

OWNER INFORMATION

PROJECT DESCRIPTION

DUMKE GYMNASTICS TRAINING CENTER

1825 E. SOUTH CAMPUS DRIVE
SALT LAKE CITY, UT 84112

AHJ STAMP

SHEET NAME:
PARTIAL ANNOTATED FLOOR PLAN - LEVEL 02

REVISIONS

MARK	DATE	DESCRIPTION

ISSUE DATA

ISSUE DATE:	10.18.21
ISSUE TYPE:	CD
DRAWN BY:	AT|DG
CHECKED BY:	KR
PROJECT#:	1877

SHEET NUMBER:

AE104

10/18/2021 4:29:01 PM S:\ajc users\taylori\Revit Local Files\21 0928 - 1877 - Dumke Womens Gymnastics Facility V20_detached_taylorIJV5V2.rvt

ALL IDEAS, DESIGNS, ARRANGEMENTS AND PLANS INDICATED OR REPRESENTED BY THIS DRAWING ARE OWNED BY AND THE PROPERTY OF AJC ARCHITECTS PC AND WERE CREATED, EVOLVED AND DEVELOPED FOR USE ON AND IN CONNECTION WITH THE SPECIFIED PROJECT. NONE OF THE IDEAS, DESIGNS, ARRANGEMENTS OR PLANS INDICATED OR REPRESENTED BY THIS DRAWING MAY BE USED BY OR DISCLOSED TO ANY PERSON, FIRM, OR CORPORATION FOR ANY PURPOSE WHATSOEVER WITHOUT WRITTEN CONSENT OF AJC ARCHITECTS PC. WRITTEN DIMENSIONS ON THESE DRAWINGS SHALL HAVE PRECEDENCE OVER SCALE DIMENSIONS. CONTRACTORS SHALL VERIFY AND BE RESPONSIBLE FOR ALL DIMENSIONS AND CONDITIONS ON THE JOB AND THIS OFFICE MUST BE NOTIFIED OF ANY VARIATION FROM THE DIMENSIONS AND CONDITIONS SHOWN BY THESE DRAWINGS. WARNING: REPRODUCTION HEREOF IS A CRIMINAL OFFENSE UNDER 18 U.S.C. 506. UNAUTHORIZED DISCLOSURE MAY CONSTITUTE TRADE SECRET MISAPPROPRIATION IN VIOLATION OF 18 U.S.C. SEC. 1832, AND OTHER LAWS.

GENERAL NOTES:

- SEE SHEET GI003 FOR GENERAL NOTES LEGENDS AND ABBREVIATIONS.
- SEE GI002 FOR DRAWING INDEX.
- DO NOT SCALE DRAWINGS.
- CONTRACTOR / SUBCONTRACTOR SHALL VERIFY ALL DIMENSIONS AND CONDITIONS BEFORE BEGINNING WORK, AND SHALL REPORT TO THE ARCHITECT ANY ERRORS, INCONSISTENCIES OR OMISSIONS BEFORE BEGINNING WORK. SEE GENERAL NOTES AND SPECIFICATIONS.

KEYED NOTES:

1 FIRE RATED MECHANICAL SHAFT.
2 CUSTOM STACKING PLAM DOORS WITH HARDWARE FROM HAFELE. REVIEW SPECS.
3 THIS IS NOT A SHAFT.
4 NO GYP. ON INSIDE OF WALL.

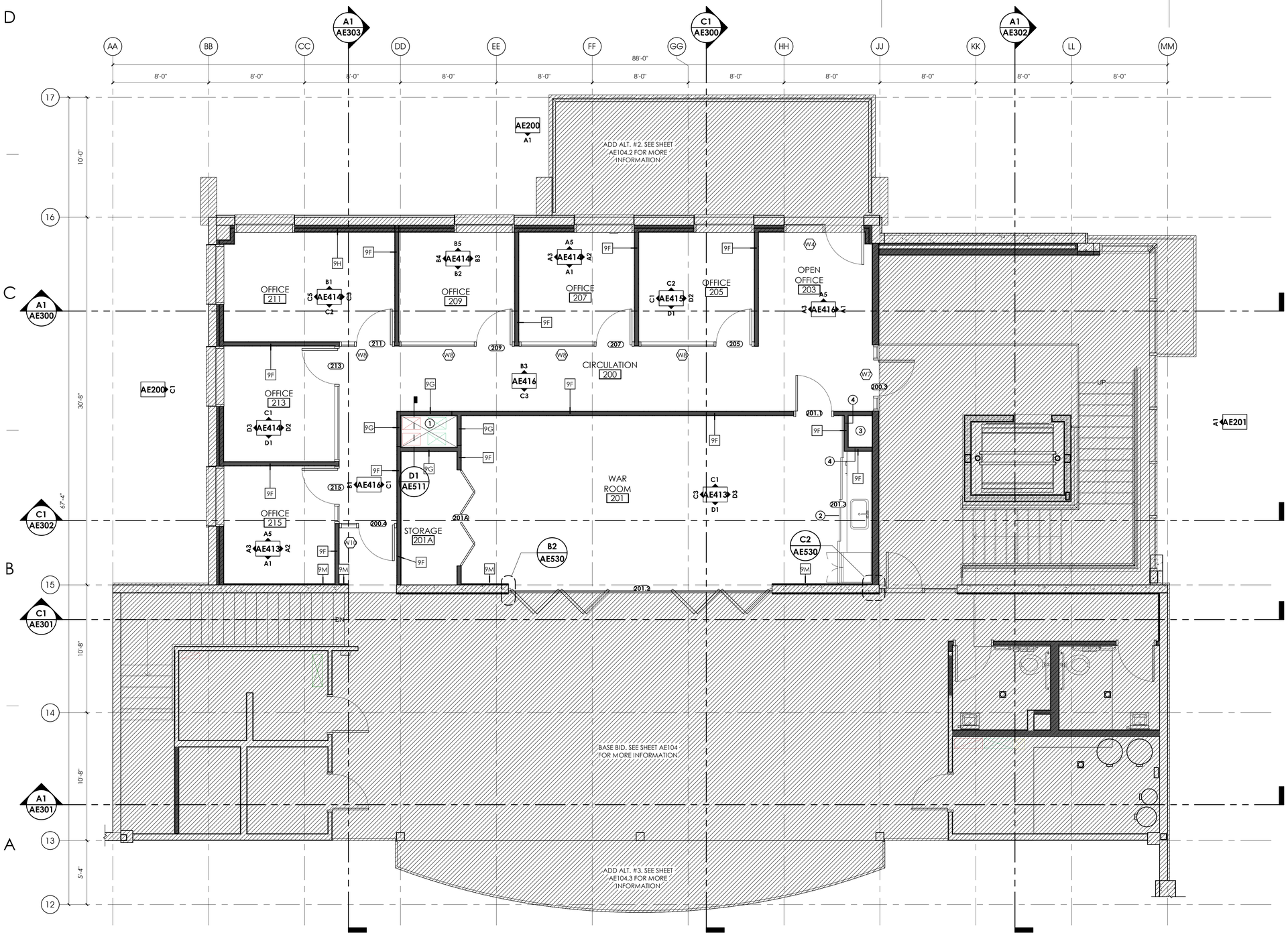

A1 **PARTIAL ANNOTATED FLOOR PLAN - LEVEL 02 - ADD ALT #1**
1/4" = 1'-0"

SCALE : 1/4" = 1'-0"

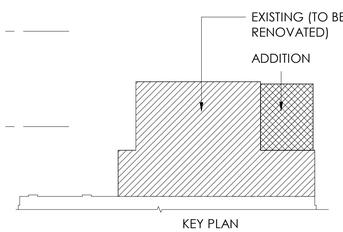

ARCHITECT 1877
ajc architects
703 east 1700 south
salt lake city, utah 84105
ph: 801.466.8818
fx: 801.466.4411
www.ajcarchitects.com

ARCHITECT / CONSULTANT

STATE OF UTAH · KENT B. RIGBY · No. 135090 · 05.18.2020 · LICENSED ARCHITECT

OWNER INFORMATION

PROJECT DESCRIPTION

DUMKE GYMNASTICS TRAINING CENTER

1825 E. SOUTH CAMPUS DRIVE
SALT LAKE CITY, UT 84112

AHJ STAMP

SHEET NAME:
PARTIAL ANNOTATED FLOOR PLAN - LEVEL 02 - ADD ALT #1

REVISIONS

MARK	DATE	DESCRIPTION

ISSUE DATA

ISSUE DATE:	10.18.21
ISSUE TYPE:	CD
DRAWN BY:	AT|DG
CHECKED BY:	KR
PROJECT#:	1877

SHEET NUMBER:

AE104.1

10/18/2021 4:29:05 PM S:\ajc users\ataylor\Revit Local Files\21 0928 - 1877 - Dumke Womens Gymnastics Facility V20_detached_ataylorUV5V2.rvt

ALL IDEAS, DESIGNS, ARRANGEMENTS AND PLANS INDICATED OR REPRESENTED BY THIS DRAWING ARE OWNED BY AND THE PROPERTY OF AJC ARCHITECTS PC AND WERE CREATED, EVOLVED, AND DEVELOPED SOLELY ON AND IN CONNECTION WITH THE SPECIFIED PROJECT. NONE OF THE IDEAS, DESIGNS, ARRANGEMENTS OR PLANS INDICATED IN OR REPRESENTED BY THIS DRAWING MAY BE USED BY OR DISCLOSED TO ANY PERSON, FIRM, OR CORPORATION FOR ANY PURPOSE WHATSOEVER WITHOUT WRITTEN CONSENT OF AJC ARCHITECTS PC. WRITTEN DIMENSIONS ON THESE DRAWINGS SHALL HAVE PRECEDENCE OVER SCALE DIMENSIONS. CONTRACTORS SHALL VERIFY AND BE RESPONSIBLE FOR ALL DIMENSIONS AND CONDITIONS ON THE JOB AND THIS OFFICE MUST BE NOTIFIED OF ANY VARIATION FROM THE DIMENSIONS AND CONDITIONS SHOWN BY THESE DRAWINGS. WARNING: REPRODUCTION HEREOF IS A CRIMINAL OFFENSE UNDER 18 U.S.C. 506. UNAUTHORIZED DISCLOSURE MAY CONSTITUTE TRADE SECRET MISAPPROPRIATION IN VIOLATION OF UC 24.2.3.11.1 ET. SEQ. AND OTHER LAWS.

GENERAL NOTES:

- SEE SHEET GI003 FOR GENERAL NOTES LEGENDS AND ABBREVIATIONS.
- SEE GI002 FOR DRAWING INDEX.
- DO NOT SCALE DRAWINGS.
- CONTRACTOR / SUBCONTRACTOR SHALL VERIFY ALL DIMENSIONS AND CONDITIONS BEFORE BEGINNING WORK, AND SHALL REPORT TO THE ARCHITECT ANY ERRORS, INCONSISTENCIES OR OMISSIONS BEFORE BEGINNING WORK. SEE GENERAL NOTES AND SPECIFICATIONS.

KEYED NOTES:

1 STEEL GUARDRAIL. PAINTED

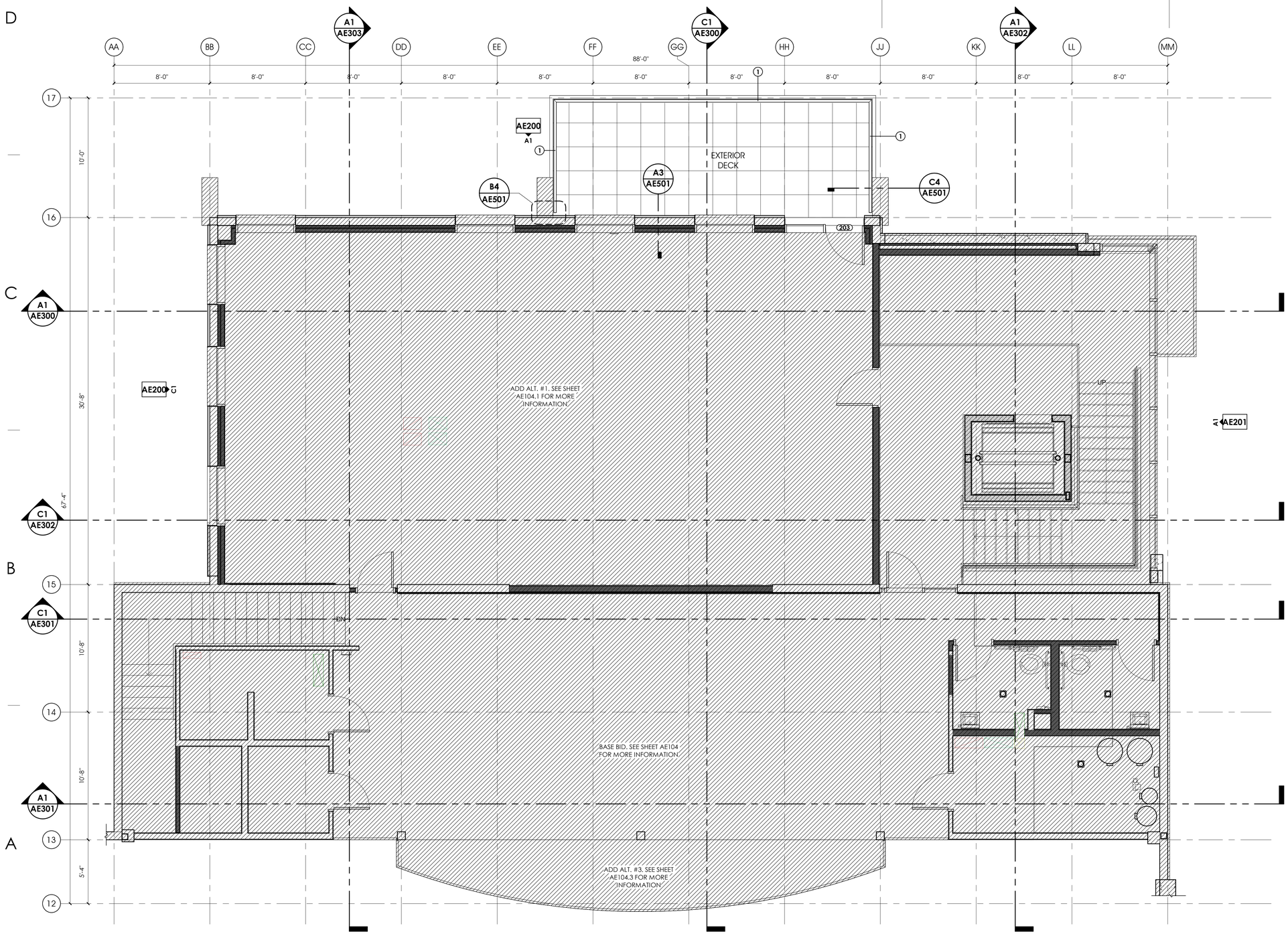

A1 PARTIAL ANNOTATED FLOOR PLAN - LEVEL 02 - ADD ALT #2
1/4" = 1'-0"

SCALE : 1/4" = 1'-0"

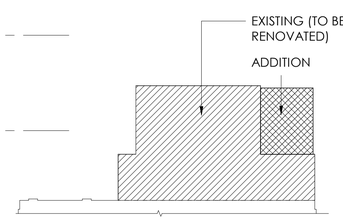

ALL IDEAS, DESIGNS, ARRANGEMENTS AND PLANS INDICATED OR REPRESENTED BY THIS DRAWING ARE OWNED BY AND THE PROPERTY OF AJC ARCHITECTS PC AND WERE CREATED, EVOLVED AND DEVELOPED FOR USE ON AND IN CONNECTION WITH THE SPECIFIED PROJECT. NONE OF THE IDEAS, DESIGNS, ARRANGEMENTS OR PLANS INDICATED OR REPRESENTED BY THIS DRAWING MAY BE USED BY OR DISCLOSED TO ANY PERSON, FIRM, OR CORPORATION FOR ANY PURPOSE WHATSOEVER WITHOUT WRITTEN CONSENT OF AJC ARCHITECTS PC. WRITTEN DIMENSIONS ON THESE DRAWINGS SHALL HAVE PRECEDENCE OVER SCALE DIMENSIONS. CONTRACTORS SHALL VERIFY AND BE RESPONSIBLE FOR ALL DIMENSIONS AND CONDITIONS ON THE JOB AND THIS OFFICE MUST BE NOTIFIED OF ANY VARIATION FROM THE DIMENSIONS AND CONDITIONS SHOWN BY THESE DRAWINGS. WARNING: REPRODUCTION HEREOF IS A CRIMINAL OFFENSE UNDER 18 U.S.C. SEC. 506. UNAUTHORIZED DISCLOSURE MAY CONSTITUTE TRADE SECRET MISAPPROPRIATION IN VIOLATION OF 12-24-2-311.1 ET. SEQ. AND OTHER LAWS.

10/18/2021 4:29:08 PM S:\ajc users\ataylor\Revit Local Files\21 0928 - 1877 - Dumke Womens Gymnastics Facility V20_detached_ataylorJV5V2.rvt

ARCHITECT 1877
ajc architects
703 east 1700 south
salt lake city, utah 84105
ph: 801.466.8818
fx: 801.466.4411
www.ajcarchitects.com

ARCHITECT / CONSULTANT

STATE OF UTAH
KENT R. RIGBY
No. 135090
05.18.2020
LICENSED ARCHITECT

OWNER INFORMATION

PROJECT DESCRIPTION

DUMKE GYMNASTICS TRAINING CENTER

1825 E. SOUTH CAMPUS DRIVE
SALT LAKE CITY, UT 84112

AHJ STAMP

SHEET NAME:
PARTIAL ANNOTATED FLOOR PLAN - LEVEL 02 - ADD ALT #2

REVISIONS

MARK	DATE	DESCRIPTION

ISSUE DATA

ISSUE DATE:	10.18.21
ISSUE TYPE:	CD
DRAWN BY:	AT|DG
CHECKED BY:	KR
PROJECT#:	1877

SHEET NUMBER:

AE104.2

GENERAL NOTES:

- SEE SHEET GI003 FOR GENERAL NOTES LEGENDS AND ABBREVIATIONS.
- SEE GI002 FOR DRAWING INDEX.
- DO NOT SCALE DRAWINGS.
- CONTRACTOR / SUBCONTRACTOR SHALL VERIFY ALL DIMENSIONS AND CONDITIONS BEFORE BEGINNING WORK, AND SHALL REPORT TO THE ARCHITECT ANY ERRORS, INCONSISTENCIES OR OMISSIONS BEFORE BEGINNING WORK. SEE GENERAL NOTES AND SPECIFICATIONS.

KEYED NOTES:

1 NEW GLASS GUARDRAIL.

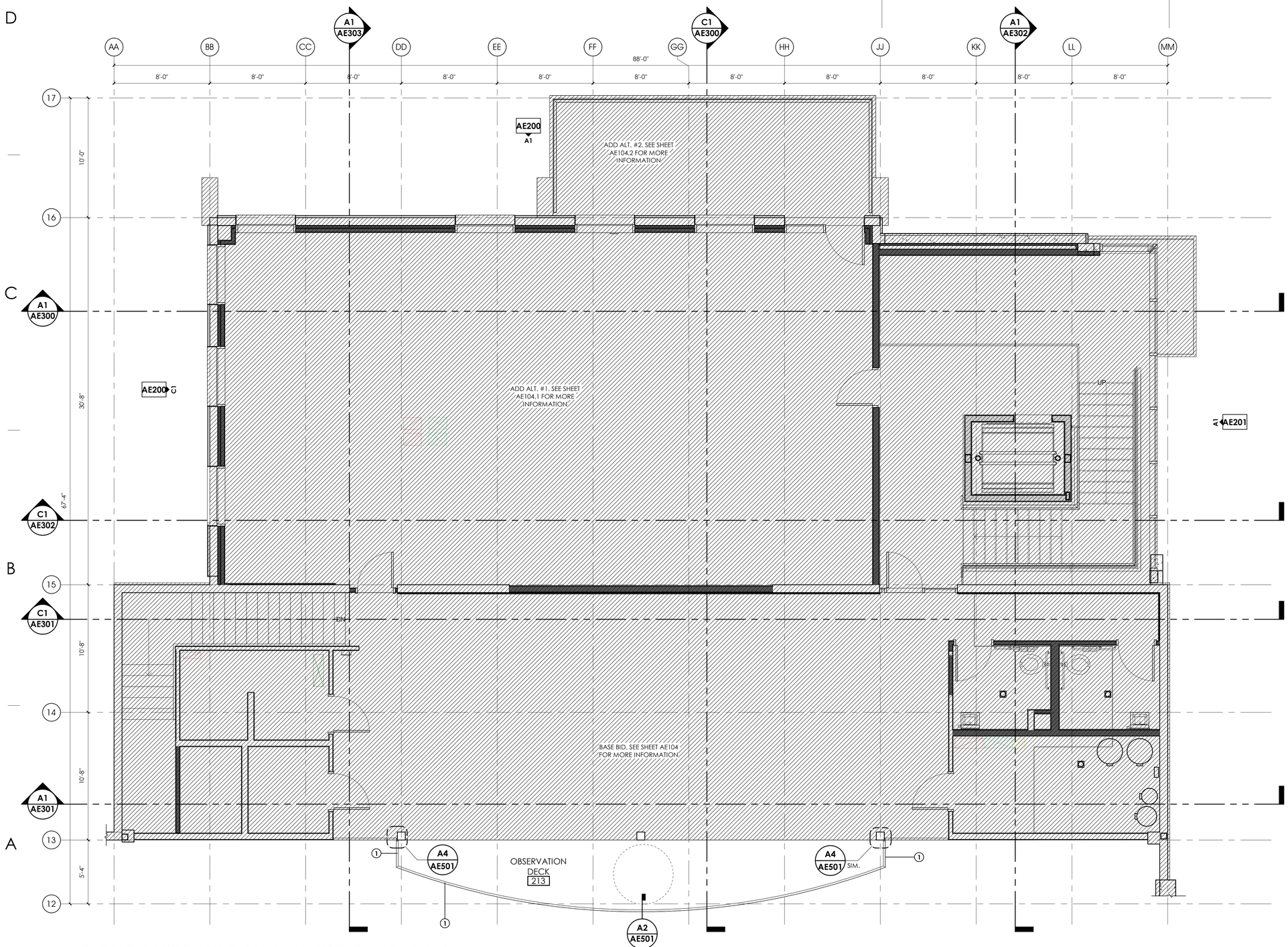

A1 **PARTIAL ANNOTATED FLOOR PLAN - LEVEL 02 - ADD ALT #3**
1/4" = 1'-0"

SCALE : 1/4" = 1'-0"

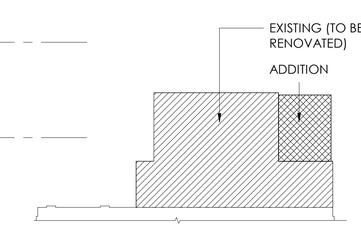

KEY PLAN

ARCHITECT 1877

ajc architects

703 east 1700 south
salt lake city, utah 84105
ph: 801.466.8818
fx: 801.466.4411
www.ajcarchitects.com

ARCHITECT / CONSULTANT

STATE OF UTAH
KENT R. RIGBY
No. 135096
05.18.2020
LICENSED ARCHITECT

OWNER INFORMATION

PROJECT DESCRIPTION

DUMKE GYMNASTICS TRAINING CENTER

1825 E. SOUTH CAMPUS DRIVE
SALT LAKE CITY, UT 84112

AHJ STAMP

SHEET NAME:

PARTIAL ANNOTATED FLOOR PLAN - LEVEL 02 - ADD ALT #3

REVISIONS

MARK	DATE	DESCRIPTION

ISSUE DATA

ISSUE DATE:	10.18.21
ISSUE TYPE:	CD
DRAWN BY:	AT|DG
CHECKED BY:	KR
PROJECT#:	1877

SHEET NUMBER:

AE104.3

10/18/2021 4:29:11 PM S:\ajc users\ataylor\Revit Local Files\21 0928 - 1877 - Dumke Womens Gymnastics Facility V20_detached_ataylorUV5V2.rvt

ALL IDEAS, DESIGNS, ARRANGEMENTS AND PLANS INDICATED OR REPRESENTED BY THIS DRAWING ARE OWNED BY AND THE PROPERTY OF AJC ARCHITECTS PC AND WERE CREATED, EVOLVED, AND DEVELOPED FOR USE ON AND IN CONNECTION WITH THE SPECIFIED PROJECT. NONE OF THE IDEAS, DESIGNS, ARRANGEMENTS OR PLANS SHALL BE USED BY OR DISCLOSED TO ANY PERSON, FIRM, OR CORPORATION FOR ANY PURPOSE WHATSOEVER WITHOUT WRITTEN CONSENT OF AJC ARCHITECTS PC. WRITTEN DIMENSIONS ON THESE DRAWINGS SHALL HAVE PRECEDENCE OVER SCALE DIMENSIONS. CONTRACTORS SHALL VERIFY AND BE RESPONSIBLE FOR ALL DIMENSIONS AND CONDITIONS ON THE JOB AND THIS OFFICE MUST BE NOTIFIED OF ANY VARIATION FROM THE DIMENSIONS AND CONDITIONS SHOWN BY THESE DRAWINGS. WARNING: REPRODUCTION HEREOF IS A CRIMINAL OFFENSE UNDER 18 U.S.C. SEC. 506. UNAUTHORIZED DISCLOSURE MAY CONSTITUTE TRADE SECRET MISAPPROPRIATION IN VIOLATION OF I.C.24-2-31-1 ET. SEQ. AND OTHER LAWS.

GENERAL NOTES:

- SEE SHEET GI003 FOR GENERAL NOTES LEGENDS AND ABBREVIATIONS.
- SEE GI002 FOR DRAWING INDEX.
- DO NOT SCALE DRAWINGS.
- CONTRACTOR / SUBCONTRACTOR SHALL VERIFY ALL DIMENSIONS AND CONDITIONS BEFORE BEGINNING WORK, AND SHALL REPORT TO THE ARCHITECT ANY ERRORS, INCONSISTENCIES OR OMISSIONS BEFORE BEGINNING WORK. SEE GENERAL NOTES AND SPECIFICATIONS.

KEYED NOTES:

1	EXISTING ROOF DRAIN LINE DROP. PROTECT.
2	EXISTING ATLAS BRICK WALL TO REMAIN. PROTECT.
3	EXISTING INTERIOR WALLS TO REMAIN. PROTECT. REPAINT.
4	EXISTING CONCRETE COLUMN TO REMAIN. PROTECT.
5	STRUCTURAL STEEL COLUMN. SEE STRUCTURAL DRAWINGS. PAINT.
6	MODULAR WELDED WIRE PLANT SUPPORT SYSTEM. SEE SPECIFICATIONS.
7	CUSTOM GATE TO MATCH WELDED WIRE PLANT SUPPORT SYSTEM.

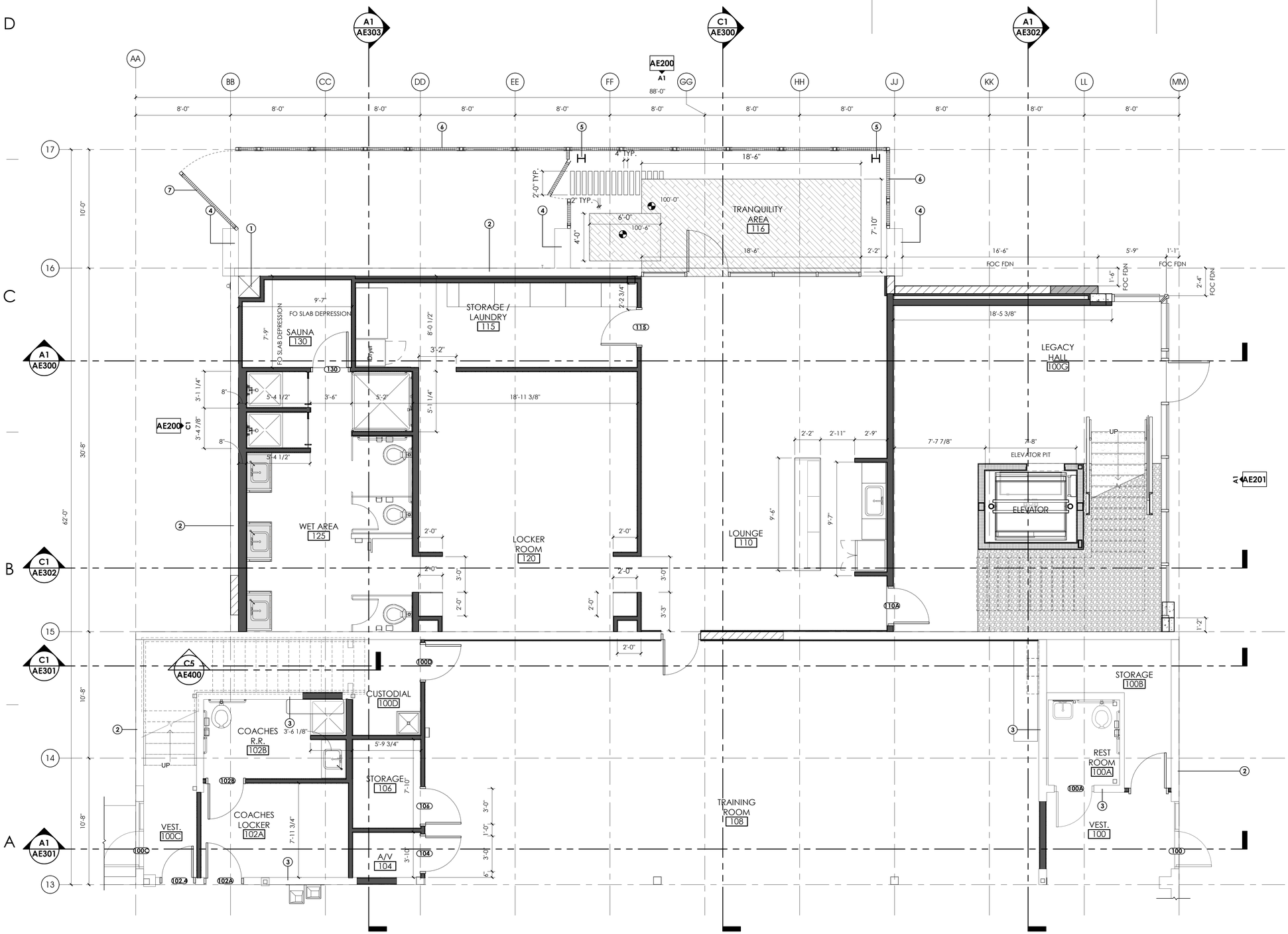

A1 PARTIAL DIMENSION PLAN - LEVEL 01
1/4" = 1'-0"

0' 2' 4' 8' 12'
SCALE : 1/4" = 1'-0"

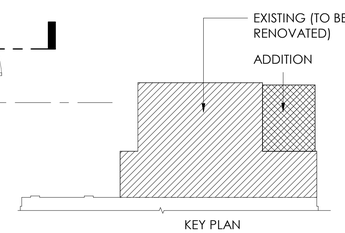

ALL IDEAS, DESIGNS, ARRANGEMENTS AND PLANS INDICATED OR REPRESENTED BY THIS DRAWING ARE OWNED BY, AND THE PROPERTY OF, AJC ARCHITECTS PC, AND WERE CREATED, EVOLVED, AND DEVELOPED FOR USE ON, AND IN CONNECTION WITH, THE SPECIFIED PROJECT. NONE OF THE IDEAS, DESIGNS, ARRANGEMENTS OR PLANS INDICATED OR REPRESENTED BY THIS DRAWING MAY BE USED BY OR DISCLOSED TO ANY PERSON, FIRM, OR CORPORATION FOR ANY PURPOSE WHATSOEVER WITHOUT WRITTEN CONSENT OF AJC ARCHITECTS PC. WRITTEN DIMENSIONS ON THESE DRAWINGS SHALL HAVE PRECEDENCE OVER SCALE DIMENSIONS. CONTRACTORS SHALL VERIFY AND BE RESPONSIBLE FOR ALL DIMENSIONS AND CONDITIONS ON THE JOB AND THIS OFFICE MUST BE NOTIFIED OF ANY VARIATION FROM THE DIMENSIONS AND CONDITIONS SHOWN BY THESE DRAWINGS. WARNING: REPRODUCTION HEREOF IS A CRIMINAL OFFENSE UNDER 18 U.S.C. 506. UNAUTHORIZED DISCLOSURE MAY CONSTITUTE TRADE SECRET MISAPPROPRIATION IN VIOLATION OF 17 U.S.C. § 1831 ET. SEQ. AND OTHER LAWS.

10/18/2021 4:29:15 PM S:\ajc users\taylor\Revit Local Files\21 0928 - 1877 - Dumke Womens Gymnastics Facility V20_detached_ataylorUV5V2.rvt

ARCHITECT 1877

ajc architects

703 east 1700 south
salt lake city, utah 84105
ph: 801.466.8818
fx: 801.466.4411
www.ajcarchitects.com

ARCHITECT / CONSULTANT

STATE OF UTAH
KENT R. RIGBY
No. 135090
05.18.2020
LICENSED ARCHITECT

OWNER INFORMATION

PROJECT DESCRIPTION

DUMKE GYMNASTICS TRAINING CENTER

1825 E. SOUTH CAMPUS DRIVE
SALT LAKE CITY, UT 84112

AHJ STAMP

SHEET NAME:
PARTIAL DIMENSION PLAN - LEVEL 01

REVISIONS

MARK	DATE	DESCRIPTION

ISSUE DATA

ISSUE DATE:	10.18.21
ISSUE TYPE:	CD
DRAWN BY:	AT|DG
CHECKED BY:	KR
PROJECT#:	1877

SHEET NUMBER:

AE105

GENERAL NOTES:

- SEE SHEET GI003 FOR GENERAL NOTES LEGENDS AND ABBREVIATIONS.
- SEE GI002 FOR DRAWING INDEX.
- DO NOT SCALE DRAWINGS.
- CONTRACTOR / SUBCONTRACTOR SHALL VERIFY ALL DIMENSIONS AND CONDITIONS BEFORE BEGINNING WORK, AND SHALL REPORT TO THE ARCHITECT ANY ERRORS, INCONSISTENCIES OR OMISSIONS BEFORE BEGINNING WORK. SEE GENERAL NOTES AND SPECIFICATIONS.

KEYED NOTES:

1 EXISTING CONCRETE BEAM.
2 EXISTING INTERIOR WALLS TO REMAIN. PROTECT. REPAINT.
3 NEW GLASS GUARDRAIL.
4 EXISTING CONCRETE COLUMN TO REMAIN. PROTECT.

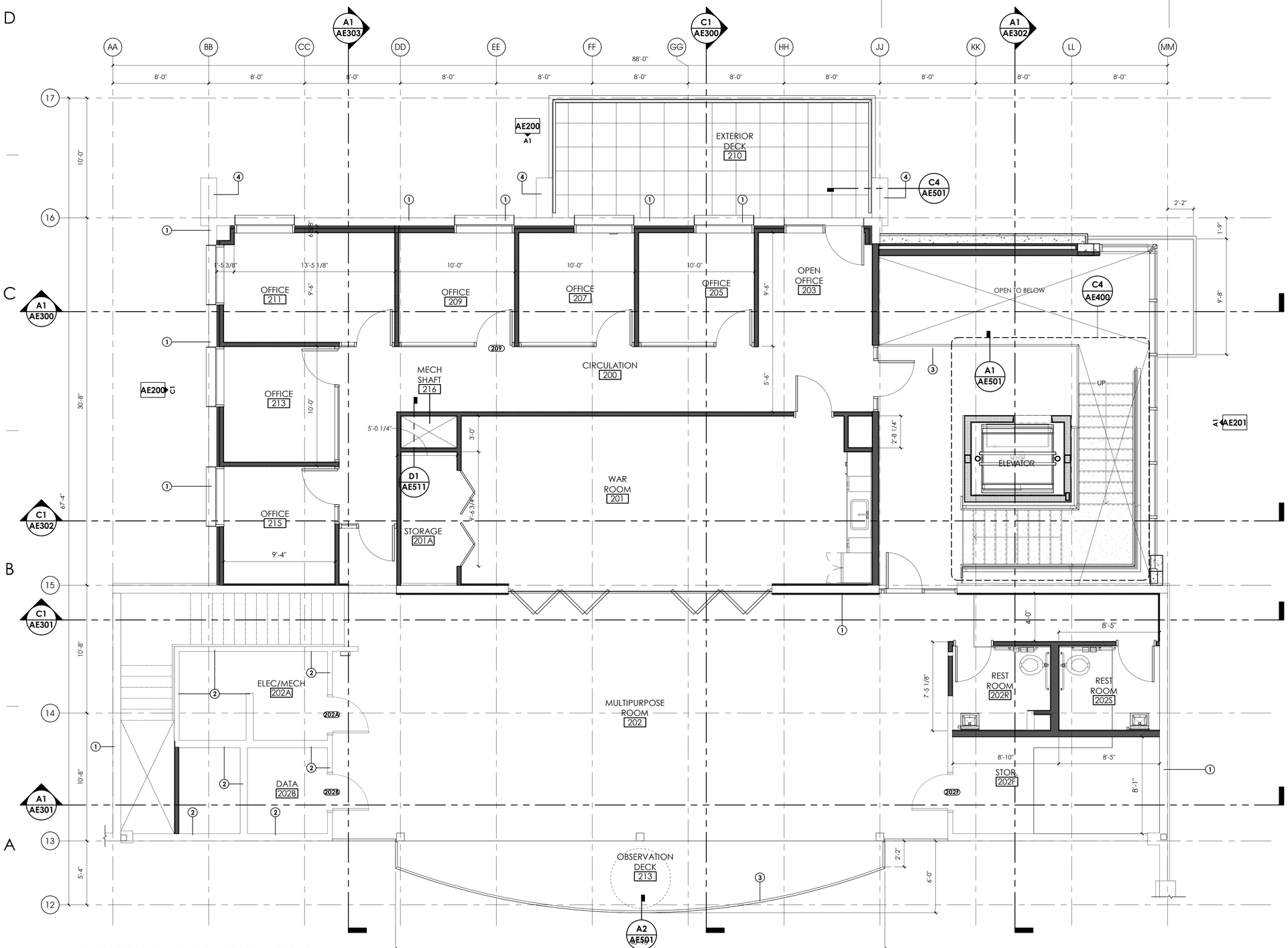

A1 PARTIAL DIMENSION PLAN - LEVEL 02
1/4" = 1'-0"

SCALE : 1/4" = 1'-0"

10/18/2021 4:29:19 PM S:\ajc users\ataylor\Revit Local Files\21 0928 - 1877 - Dumke Womens Gymnastics Facility V20_detached_ataylorUV5V2.rvt

ALL IDEAS, DESIGNS, ARRANGEMENTS AND PLANS INDICATED OR REPRESENTED BY THIS DRAWING ARE OWNED BY AND THE PROPERTY OF AJC ARCHITECTS PC AND WERE CREATED, EVOLVED AND DEVELOPED FOR USE ON AND IN CONNECTION WITH THE SPECIFIED PROJECT. NONE OF THE IDEAS, DESIGNS, ARRANGEMENTS OR PLANS INDICATED OR REPRESENTED BY THIS DRAWING MAY BE USED BY OR DISCLOSED TO ANY PERSON, FIRM, OR CORPORATION FOR ANY PURPOSE WHATSOEVER WITHOUT WRITTEN CONSENT OF AJC ARCHITECTS PC. WRITTEN DIMENSIONS ON THESE DRAWINGS SHALL HAVE PRECEDENCE OVER SCALE DIMENSIONS. CONTRACTORS SHALL VERIFY AND BE RESPONSIBLE FOR ALL DIMENSIONS AND CONDITIONS ON THE JOB AND THIS OFFICE MUST BE NOTIFIED OF ANY VARIATION FROM THE DIMENSIONS AND CONDITIONS SHOWN BY THESE DRAWINGS. WARNING: REPRODUCTION HEREOF IS A CRIMINAL OFFENSE UNDER 18 U.S.C. SEC. 506. UNAUTHORIZED DISCLOSURE MAY CONSTITUTE TRADE SECRET MISAPPROPRIATION IN VIOLATION OF 17 U.S.C. § 1341 ET. SEQ. AND OTHER LAWS.

ARCHITECT 1877
ajc architects
703 east 1700 south
salt lake city, utah 84105
ph: 801.466.8818
fx: 801.466.4411
www.ajcarchitects.com

ARCHITECT / CONSULTANT

STATE OF UTAH
KENT R. RIGBY
No. 135090
05.18.2020
LICENSED ARCHITECT

OWNER INFORMATION

PROJECT DESCRIPTION

DUMKE GYMNASTICS TRAINING CENTER

1825 E. SOUTH CAMPUS DRIVE
SALT LAKE CITY, UT 84112

AHJ STAMP

SHEET NAME:
PARTIAL DIMENSION PLAN - LEVEL 02

REVISIONS

MARK	DATE	DESCRIPTION

ISSUE DATA

ISSUE DATE:	10.18.21
ISSUE TYPE:	CD
DRAWN BY:	AT|DG
CHECKED BY:	KR
PROJECT#:	1877

SHEET NUMBER:
AE106

FINISH NOTES:

- WALL, FLOOR, BASE AND CEILING KEYNOTE: THIS SYMBOL, WHEN ATTACHED TO A WALL, SHALL INDICATE THIS FINISH FOR THE ENTIRE LENGTH OF WALL FROM ONE INTERSECTION TO THE NEXT AND NOT BE TERMINATED BY WINDOWS OR DOORS, U.N.O.
- SEE SHEET AE620 FOR FINISH LEGEND
- REFER TO CARPET LAYOUT PATTERN PROVIDED BY CARPET VENDOR.

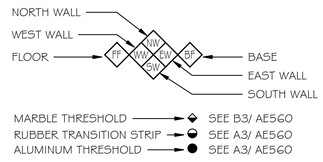

GENERAL NOTES:

- SEE SHEET GI003 FOR GENERAL NOTES LEGENDS AND ABBREVIATIONS.
- SEE GI002 FOR DRAWING INDEX.
- DO NOT SCALE DRAWINGS.
- CONTRACTOR / SUBCONTRACTOR SHALL VERIFY ALL DIMENSIONS AND CONDITIONS BEFORE BEGINNING WORK, AND SHALL REPORT TO THE ARCHITECT ANY ERRORS, INCONSISTENCIES OR OMISSIONS BEFORE BEGINNING WORK. SEE GENERAL NOTES AND SPECIFICATIONS.

KEYED NOTES:

1	EXISTING ROOF DRAIN LINE DROP. PROTECT.
2	EXISTING ATLAS BRICK WALL TO REMAIN. PROTECT.
3	EXISTING INTERIOR WALLS TO REMAIN. PROTECT. REPAINT.
4	EXISTING CONCRETE COLUMN TO REMAIN. PROTECT.
5	STRUCTURAL STEEL COLUMN. SEE STRUCTURAL DRAWINGS. PAINT.
6	CUSTOM GATE TO MATCH WELDED WIRE PLANT SUPPORT SYSTEM.
7	REINFORCED GRAVEL. SEE CIVIL DRAWINGS.
8	2" LAYER OF CRUSHED STONE. SLAB TO BE RECESSED IN THIS AREA.

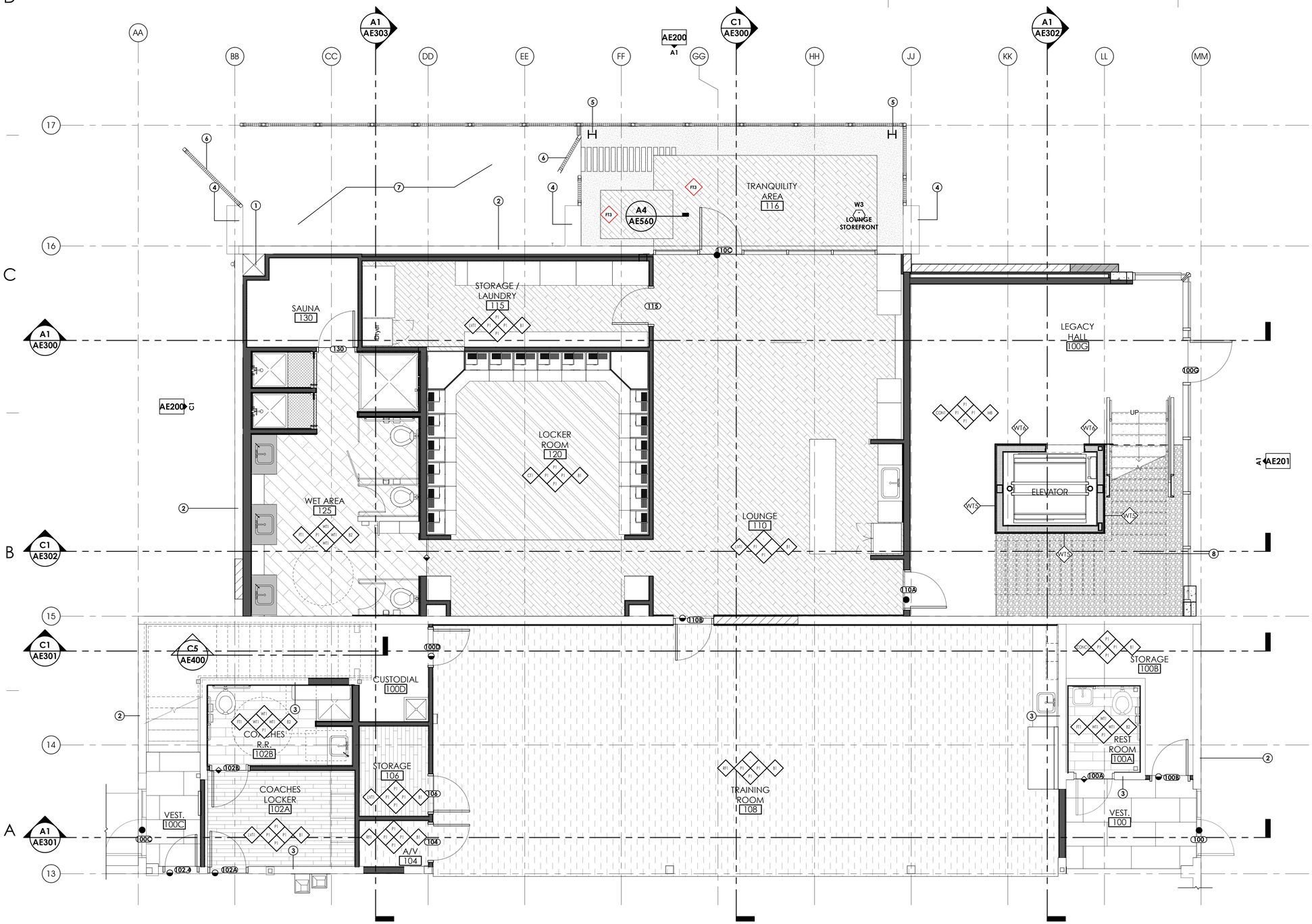

A1 **PARTIAL FINISH PLAN - LEVEL 01**
1/4" = 1'-0"

SCALE : 1/4" = 1'-0"

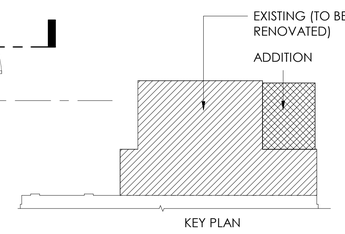

ARCHITECT 1877
ajc architects
703 east 1700 south
salt lake city, utah 84105
ph: 801.466.8818
fx: 801.466.4411
www.ajcarchitects.com

ARCHITECT / CONSULTANT

STATE OF UTAH · KENT B. RIGBY · No. 135090 · 05.18.2020 · LICENSED ARCHITECT

OWNER INFORMATION

PROJECT DESCRIPTION

DUMKE GYMNASTICS TRAINING CENTER

1825 E. SOUTH CAMPUS DRIVE
SALT LAKE CITY, UT 84112

AHJ STAMP

SHEET NAME:
PARTIAL FINISH PLAN - LEVEL 01

REVISIONS

MARK	DATE	DESCRIPTION

ISSUE DATA

ISSUE DATE:	10.18.21
ISSUE TYPE:	CD
DRAWN BY:	AT|DG
CHECKED BY:	KR
PROJECT#:	1877

SHEET NUMBER:
AE107

10/18/2021 4:29:24 PM S:\ajc users\ataylor\Revit Local Files\21 0928 - 1877 - Dumke Womens Gymnastics Facility V20_detached_ataylorUV5V2.rvt

ALL IDEAS, DESIGNS, ARRANGEMENTS AND PLANS INDICATED OR REPRESENTED BY THIS DRAWING ARE OWNED BY, AND THE PROPERTY OF, AJC ARCHITECTS PC, AND WERE CREATED, EVOLVED, AND DEVELOPED FOR USE ON, AND IN CONNECTION WITH THE SPECIFIED PROJECT. NONE OF THE IDEAS, DESIGNS, ARRANGEMENTS OR PLANS INDICATED OR REPRESENTED BY THIS DRAWING SHALL BE USED BY OR DISCLOSED TO ANY PERSON, FIRM, OR CORPORATION FOR ANY PURPOSE WHATSOEVER WITHOUT WRITTEN CONSENT OF AJC ARCHITECTS PC. WRITTEN DIMENSIONS ON THESE DRAWINGS SHALL HAVE PRECEDENCE OVER SCALE DIMENSIONS. CONTRACTORS SHALL VERIFY AND BE RESPONSIBLE FOR ALL DIMENSIONS AND CONDITIONS ON THE JOB AND THIS OFFICE MUST BE NOTIFIED OF ANY VARIATION FROM THE DIMENSIONS AND CONDITIONS SHOWN BY THESE DRAWINGS. WARNING: REPRODUCTION HEREOF IS A CRIMINAL OFFENSE UNDER 18 U.S.C. 506. UNAUTHORIZED DISCLOSURE MAY CONSTITUTE TRADE SECRET MISAPPROPRIATION IN VIOLATION OF UC 24.2.3.1.1 ET. SEQ. AND OTHER LAWS.

FINISH NOTES:

- WALL, FLOOR, BASE AND CEILING KEYNOTE: THIS SYMBOL, WHEN ATTACHED TO A WALL, SHALL INDICATE THIS FINISH FOR THE ENTIRE LENGTH OF WALL FROM ONE INTERSECTION TO THE NEXT AND NOT BE TERMINATED BY WINDOWS OR DOORS, U.N.O.
- SEE SHEET AE620 FOR FINISH LEGEND
- REFER TO CARPET LAYOUT PATTERN PROVIDED BY CARPET VENDOR.

NORTH WALL
WEST WALL
FLOOR
BASE
EAST WALL
SOUTH WALL

MARBLE THRESHOLD — SEE B3/ AE560
RUBBER TRANSITION STRIP — SEE A3/ AE560
ALUMINUM THRESHOLD — SEE A3/ AE560

GENERAL NOTES:

- SEE SHEET GI003 FOR GENERAL NOTES LEGENDS AND ABBREVIATIONS.
- SEE GI002 FOR DRAWING INDEX.
- DO NOT SCALE DRAWINGS.
- CONTRACTOR / SUBCONTRACTOR SHALL VERIFY ALL DIMENSIONS AND CONDITIONS BEFORE BEGINNING WORK, AND SHALL REPORT TO THE ARCHITECT ANY ERRORS, INCONSISTENCIES OR OMISSIONS BEFORE BEGINNING WORK. SEE GENERAL NOTES AND SPECIFICATIONS.

KEYED NOTES:

1 EXISTING CONCRETE BEAM.
2 EXISTING INTERIOR WALLS TO REMAIN. PROTECT. REPAINT.
3 NEW GLASS GUARDRAIL.
4 EXISTING CONCRETE COLUMN TO REMAIN. PROTECT.
5 CUSTOM STACKING PLAM DOORS WITH HARDWARE FROM HAFELE. REVIEW SPECS.

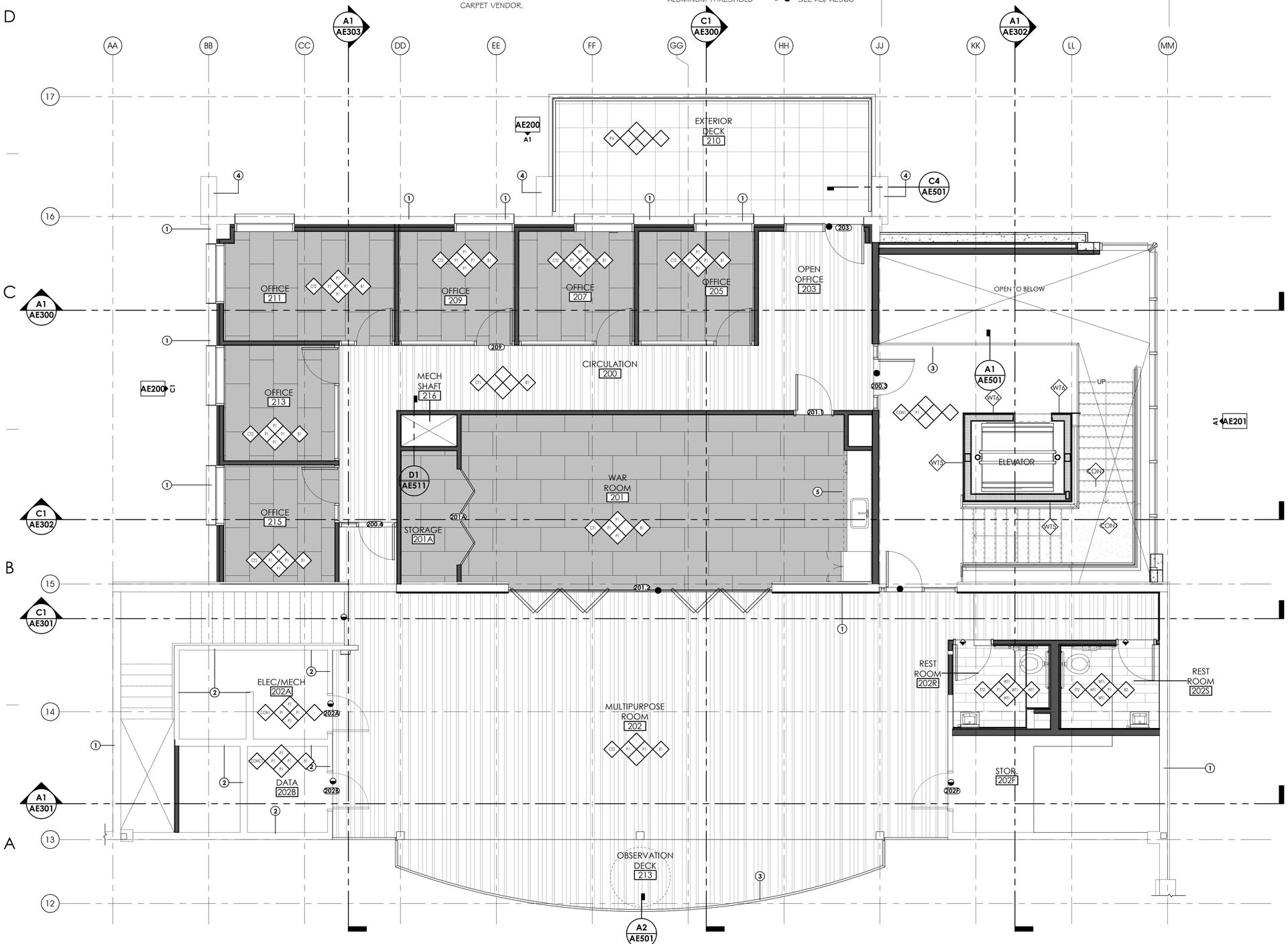

A1 **PARTIAL FINISH PLAN - LEVEL 02**
1/4" = 1'-0"

SCALE : 1/4" = 1'-0"

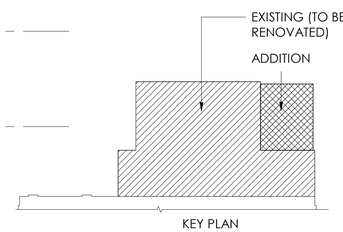

ARCHITECT 1877
ajc architects
703 east 1700 south
salt lake city, utah 84105
ph: 801.466.8818
fx: 801.466.4411
www.ajcarchitects.com

ARCHITECT / CONSULTANT

STATE OF UTAH
KENT R. RIGBY
No. 135090
05.18.2020
LICENSED ARCHITECT

OWNER INFORMATION

PROJECT DESCRIPTION

DUMKE GYMNASTICS TRAINING CENTER

1825 E. SOUTH CAMPUS DRIVE
SALT LAKE CITY, UT 84112

AHJ STAMP

SHEET NAME:
PARTIAL FINISH PLAN - LEVEL 02

REVISIONS

MARK	DATE	DESCRIPTION

ISSUE DATA

ISSUE DATE:	10.18.21
ISSUE TYPE:	CD
DRAWN BY:	AT|DG
CHECKED BY:	KR
PROJECT#:	1877

SHEET NUMBER:
AE108

10/18/2021 4:29:28 PM S:\ajc users\ataylor\Revit Local Files\21 0928 - 1877 - Dumke Womens Gymnastics Facility V20_detached_ataylorUv5V2.rvt

ALL IDEAS, DESIGNS, ARRANGEMENTS AND PLANS INDICATED OR REPRESENTED BY THIS DRAWING ARE OWNED BY AND THE PROPERTY OF AJC ARCHITECTS PC AND WERE CREATED, EVOLVED, AND DEVELOPED FOR USE ON AND IN CONNECTION WITH THE SPECIFIED PROJECT. NONE OF THE IDEAS, DESIGNS, ARRANGEMENTS OR PLANS INDICATED OR REPRESENTED BY THIS DRAWING SHALL HAVE PRECEDENCE OVER SCALE DIMENSIONS. CONTRACTORS SHALL VERIFY AND BE RESPONSIBLE FOR ALL DIMENSIONS AND CONDITIONS ON THE JOB AND THIS OFFICE MUST BE NOTIFIED OF ANY VARIATION FROM THE DIMENSIONS AND CONDITIONS SHOWN BY THESE DRAWINGS. WARNING: REPRODUCTION HEREOF IS A CRIMINAL OFFENSE UNDER 18 U.S.C. 506. UNAUTHORIZED DISCLOSURE MAY CONSTITUTE TRADE SECRET MISAPPROPRIATION IN VIOLATION OF UC 24.2.3.1.1 ET. SEQ. AND OTHER LAWS.

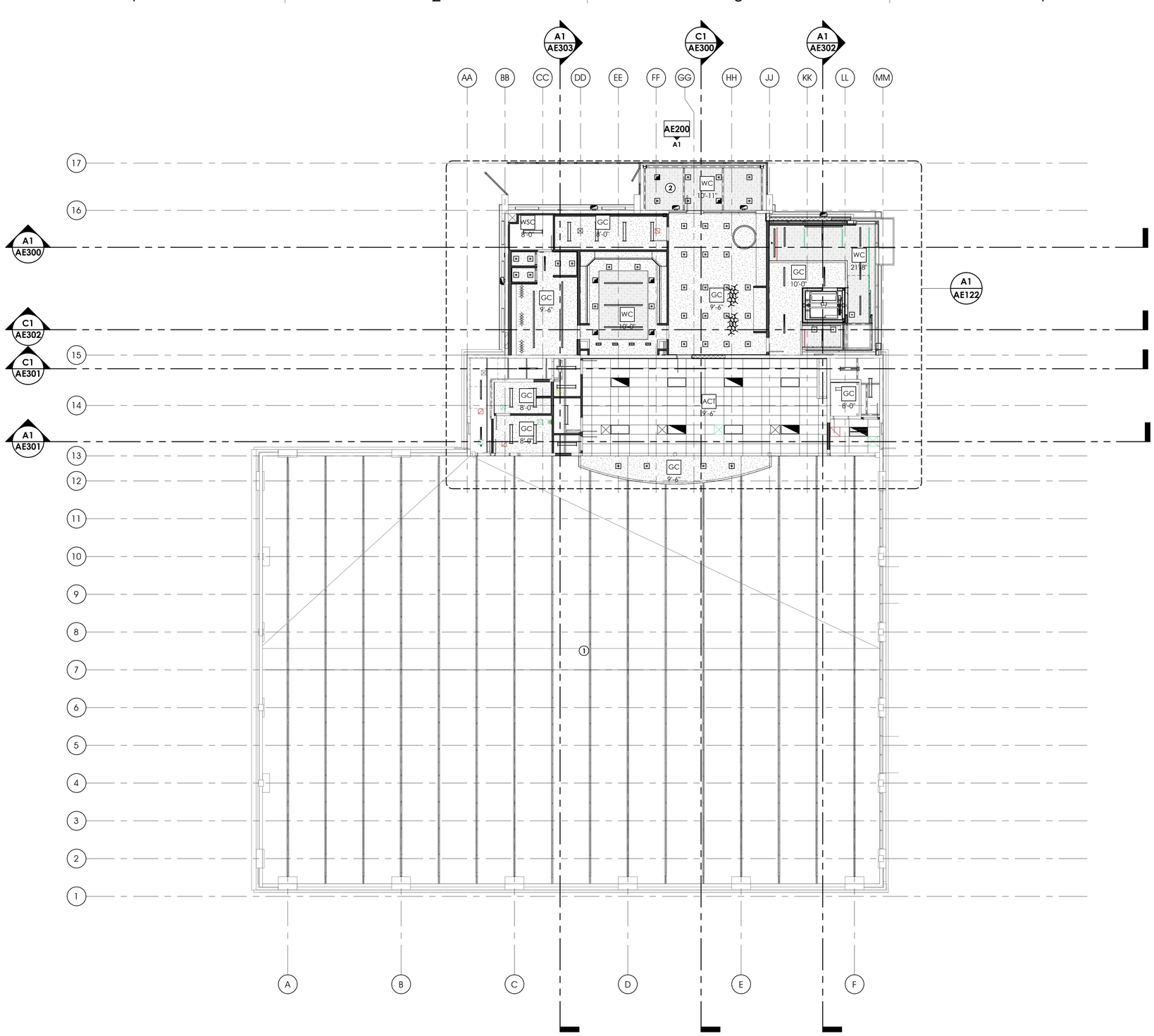

A1 **OVERALL REFLECTED CEILING PLAN - LEVEL 01**
3/32" = 1'-0"

0' 5'-4" 10'-8" 21'-4" 32'-0"
SCALE : 3/32" = 1'-0"

GENERAL NOTES AND LEGEND:

- SEE SHEET AE001 FOR GENERAL NOTES.
- SEE COVER SHEET FOR DRAWING INDEX
- DO NOT SCALE DRAWINGS.
- CONTRACTORS SHALL VERIFY ALL DIMENSIONS AND CONDITIONS BEFORE BEGINNING WORK AND SHALL REPORT TO THE ARCHITECT ANY ERRORS, INCONSISTENCIES OR OMISSIONS BEFORE BEGINNING WORK. SEE GENERAL NOTES AND SPECIFICATIONS.
- THIS IS A REFLECTED CEILING PLAN AND IS NOT INTENDED TO BE A LIGHTING PLAN. NO WALL MOUNTED LIGHTING FIXTURES OR OTHER WALL MOUNTED APPURTENANCES ARE SHOWN. SEE THE LIGHTING PLAN FOR ALL LIGHTING AND EGRESS SIGNS, SIZE AND TYPES OF ELECTRICAL FIXTURES ETC. SEE MECHANICAL PLANS FOR ALL CEILING MOUNTED DIFFUSERS /GRILLES ETC.

CEILING FINISHES

GYP. CEILING	GC
ACOUSTIC TILE CEILING	ACT
EXT. WOOD LOOK METAL SOFFIT	WC
ALUMINUM SOFFIT	AS

KEYED NOTES:

1 EXISTING GYMNASIUM AREA TO REMAIN. PROTECT.
2 BOTTOM OF NEW EXTERIOR DECK.

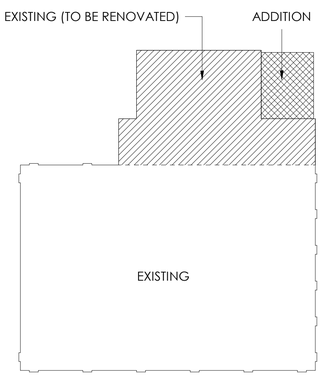

KEY PLAN

ARCHITECT 1877
ajc architects
703 east 1700 south
salt lake city, utah 84105
ph: 801.466.8818
fx: 801.466.4411
www.ajcarchitects.com

ARCHITECT / CONSULTANT

STATE OF UTAH
KENT R. RIGBY
No. 135096
05.18.2020
LICENSED ARCHITECT

OWNER INFORMATION

PROJECT DESCRIPTION

DUMKE GYMNASTICS TRAINING CENTER
1825 E. SOUTH CAMPUS DRIVE
SALT LAKE CITY, UT 84112

AHJ STAMP

SHEET NAME:
OVERALL REFLECTED CEILING PLAN - LEVEL 01

REVISIONS

MARK	DATE	DESCRIPTION

ISSUE DATA

ISSUE DATE:	10.18.21
ISSUE TYPE:	CD
DRAWN BY:	AT|DG
CHECKED BY:	KR
PROJECT#:	1877

SHEET NUMBER:
AE120

10/18/2021 4:29:37 PM S:\ajc users\ataylor\Revit Local Files\21 0928 - 1877 - Dumke Womens Gymnastics Facility V20_detached_atayloruV5V2.rvt
ALL IDEAS, DESIGNS, ARRANGEMENTS AND PLANS INDICATED OR REPRESENTED BY THIS DRAWING ARE OWNED BY AND THE PROPERTY OF AJC ARCHITECTS PC AND WERE CREATED, EVOLVED, AND DEVELOPED FOR USE ON AND IN CONNECTION WITH THE SPECIFIED PROJECT. NONE OF THE IDEAS, DESIGNS, ARRANGEMENTS OR PLANS SHALL BE USED BY OR DISCLOSED TO ANY PERSON, FIRM, OR CORPORATION FOR ANY PURPOSE WHATSOEVER WITHOUT WRITTEN CONSENT OF AJC ARCHITECTS PC. WRITTEN DIMENSIONS ON THESE DRAWINGS SHALL HAVE PRECEDENCE OVER SCALE DIMENSIONS. CONTRACTORS SHALL VERIFY AND BE RESPONSIBLE FOR ALL DIMENSIONS AND CONDITIONS ON THE JOB AND THIS OFFICE MUST BE NOTIFIED OF ANY VARIATION FROM THE DIMENSIONS AND CONDITIONS SHOWN BY THESE DRAWINGS. WARNING: REPRODUCTION HEREOF IS A CRIMINAL OFFENSE UNDER 18 U.S.C. SEC. 506. UNAUTHORIZED DISCLOSURE MAY CONSTITUTE TRADE SECRET MISAPPROPRIATION IN VIOLATION OF I.C.24-2-3.1-1 ET. SEQ. AND OTHER LAWS.

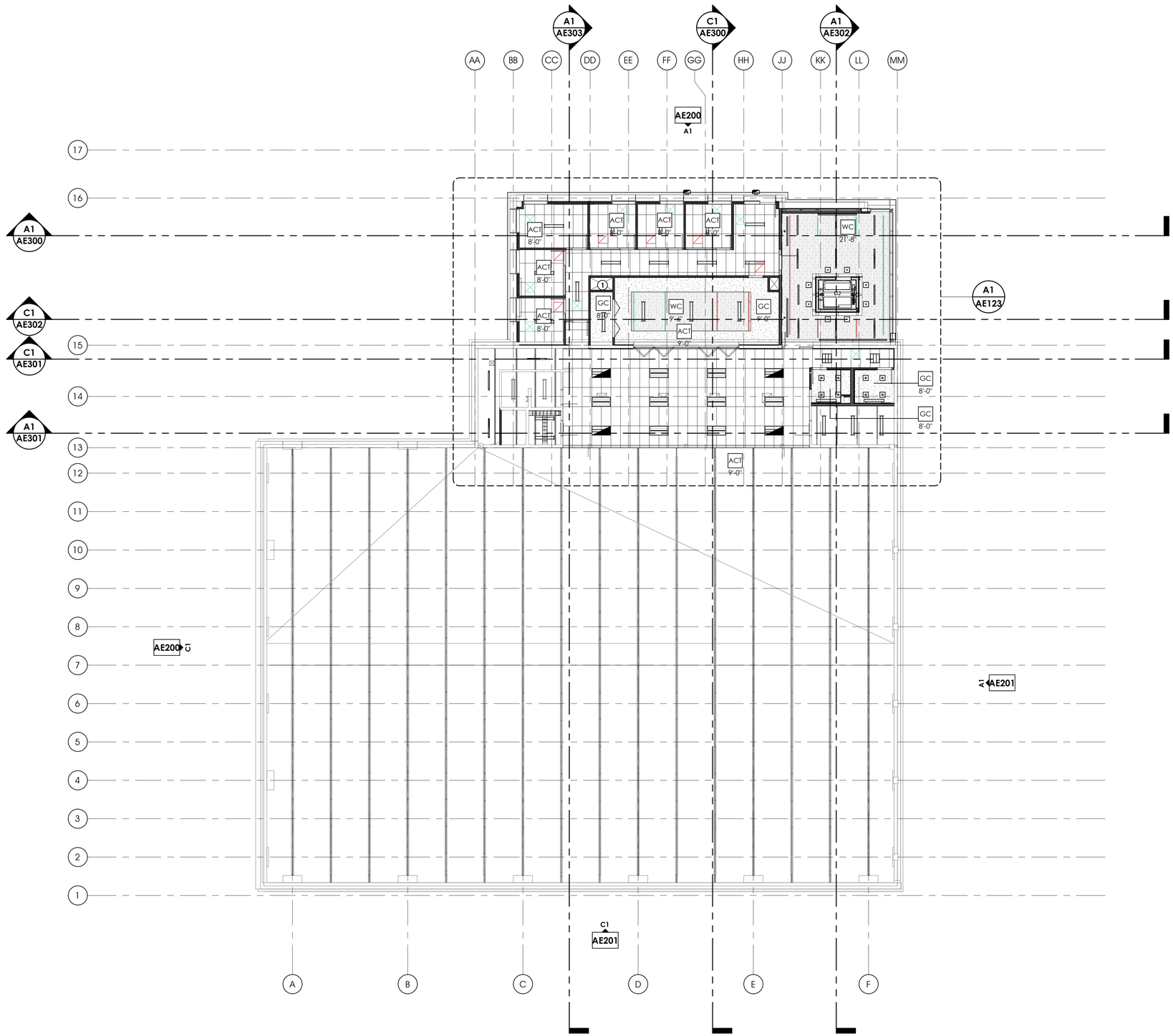

A1 **OVERALL REFLECTED CEILING PLAN - LEVEL 02**
3/32" = 1'-0"

0' 5'-4" 10'-8" 21'-4" 32'-0"
SCALE : 3/32" = 1'-0"

GENERAL NOTES AND LEGEND:

- SEE SHEET AE001 FOR GENERAL NOTES.
- SEE COVER SHEET FOR DRAWING INDEX
- DO NOT SCALE DRAWINGS.
- CONTRACTORS SHALL VERIFY ALL DIMENSIONS AND CONDITIONS BEFORE BEGINNING WORK AND SHALL REPORT TO THE ARCHITECT ANY ERRORS, INCONSISTENCIES OR OMISSIONS BEFORE BEGINNING WORK. SEE GENERAL NOTES AND SPECIFICATIONS.
- THIS IS A REFLECTED CEILING PLAN AND IS NOT INTENDED TO BE A LIGHTING PLAN. NO WALL MOUNTED LIGHTING FIXTURES OR OTHER WALL MOUNTED APPURTENANCES ARE SHOWN. SEE THE LIGHTING PLAN FOR ALL LIGHTING AND EGRESS SIGNS, SIZE AND TYPES OF ELECTRICAL FIXTURES ETC. SEE MECHANICAL PLANS FOR ALL CEILING MOUNTED DIFFUSERS /GRILLES ETC.

CEILING FINISHES

GYP. CEILING	GC
ACOUSTIC TILE CEILING	ACT
EXT. WOOD LOOK METAL SOFFIT	WC
ALUMINUM SOFFIT	AS

KEYED NOTES:

1 FIRE RATED MECHANICAL SHAFT.

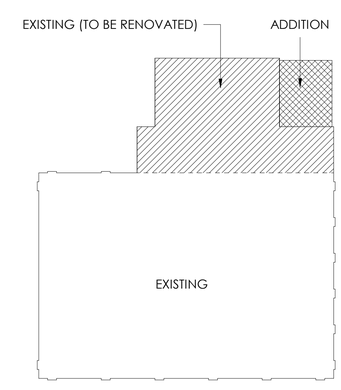

KEY PLAN

ARCHITECT 1877

ajc architects
703 east 1700 south
salt lake city, utah 84105
ph: 801.466.8818
fx: 801.466.4411
www.ajcarchitects.com

ARCHITECT / CONSULTANT

STATE OF UTAH
KENT R. RIGBY
No. 135096
05.18.2020
LICENSED ARCHITECT

OWNER INFORMATION

PROJECT DESCRIPTION

DUMKE GYMNASTICS TRAINING CENTER
1825 E. SOUTH CAMPUS DRIVE
SALT LAKE CITY, UT 84112

AHJ STAMP

SHEET NAME:
OVERALL REFLECTED CEILING PLAN - LEVEL 02

REVISIONS

MARK	DATE	DESCRIPTION

ISSUE DATA

ISSUE DATE:	10.18.21
ISSUE TYPE:	CD
DRAWN BY:	AT|DG
CHECKED BY:	KR
PROJECT#:	1877

SHEET NUMBER:
AE121

10/18/2021 4:29:42 PM S:\ajc users\ataylor\Revit Local Files\21 0928 - 1877 - Dumke Womens Gymnastics Facility V20_detached_atayloruV5V2.rvt
ALL IDEAS, DESIGNS, ARRANGEMENTS AND PLANS INDICATED OR REPRESENTED BY THIS DRAWING ARE OWNED BY AND THE PROPERTY OF AJC ARCHITECTS PC AND WERE CREATED, EVOLVED, AND DEVELOPED FOR USE ON AND IN CONNECTION WITH THE SPECIFIED PROJECT. NONE OF THE IDEAS, DESIGNS, ARRANGEMENTS OR PLANS SHALL BE USED BY OR DISCLOSED TO ANY PERSON, FIRM, OR CORPORATION FOR ANY PURPOSE WHATSOEVER WITHOUT WRITTEN CONSENT OF AJC ARCHITECTS PC. WRITTEN DIMENSIONS ON THESE DRAWINGS SHALL HAVE PRECEDENCE OVER SCALE DIMENSIONS. CONTRACTORS SHALL VERIFY AND BE RESPONSIBLE FOR ALL DIMENSIONS AND CONDITIONS ON THE JOB AND THIS OFFICE MUST BE NOTIFIED OF ANY VARIATION FROM THE DIMENSIONS AND CONDITIONS SHOWN BY THESE DRAWINGS. WARNING: REPRODUCTION HEREOF IS A CRIMINAL OFFENSE UNDER 18 U.S.C. SEC. 506. UNAUTHORIZED DISCLOSURE MAY CONSTITUTE TRADE SECRET MISAPPROPRIATION IN VIOLATION OF LC 24-2-31-1 ET. SEQ. AND OTHER LAWS.

CEILING FINISHES

GYP. CEILING	GC	LIGHT FIXTURES	
ACOUSTIC TILE CEILING	ACT	HVAC EQUIPMENT	
EXT. WOOD LOOK METAL SOFFIT	WC		
ALUMINUM SOFFIT	AS		

GENERAL NOTES:

- SEE SHEET GI003 FOR GENERAL NOTES LEGENDS AND ABBREVIATIONS.
- SEE GI002 FOR DRAWING INDEX.
- DO NOT SCALE DRAWINGS.
- CONTRACTOR / SUBCONTRACTOR SHALL VERIFY ALL DIMENSIONS AND CONDITIONS BEFORE BEGINNING WORK, AND SHALL REPORT TO THE ARCHITECT ANY ERRORS, INCONSISTENCIES OR OMISSIONS BEFORE BEGINNING WORK. SEE GENERAL NOTES AND SPECIFICATIONS.
- NOTE: ALL CEILINGS SHOWN ON THIS SHEET ARE NEW CEILINGS.

KEYED NOTES:

1 EXISTING ROOF DRAIN LINE DROP. PROTECT.
2 EXISTING ATLAS BRICK WALL TO REMAIN. PROTECT.
3 EXISTING INTERIOR WALLS TO REMAIN. PROTECT. REPAINT.
4 NEW EXTERIOR DECK.
5 GYP. BOARD CONTROL JOINT.
6 EXPOSED STRUCTURE. PAINT. SEE STRUCTURAL DRAWINGS.
7 LIGHT FIXTURE. SEE ELECTRICAL DRAWINGS.

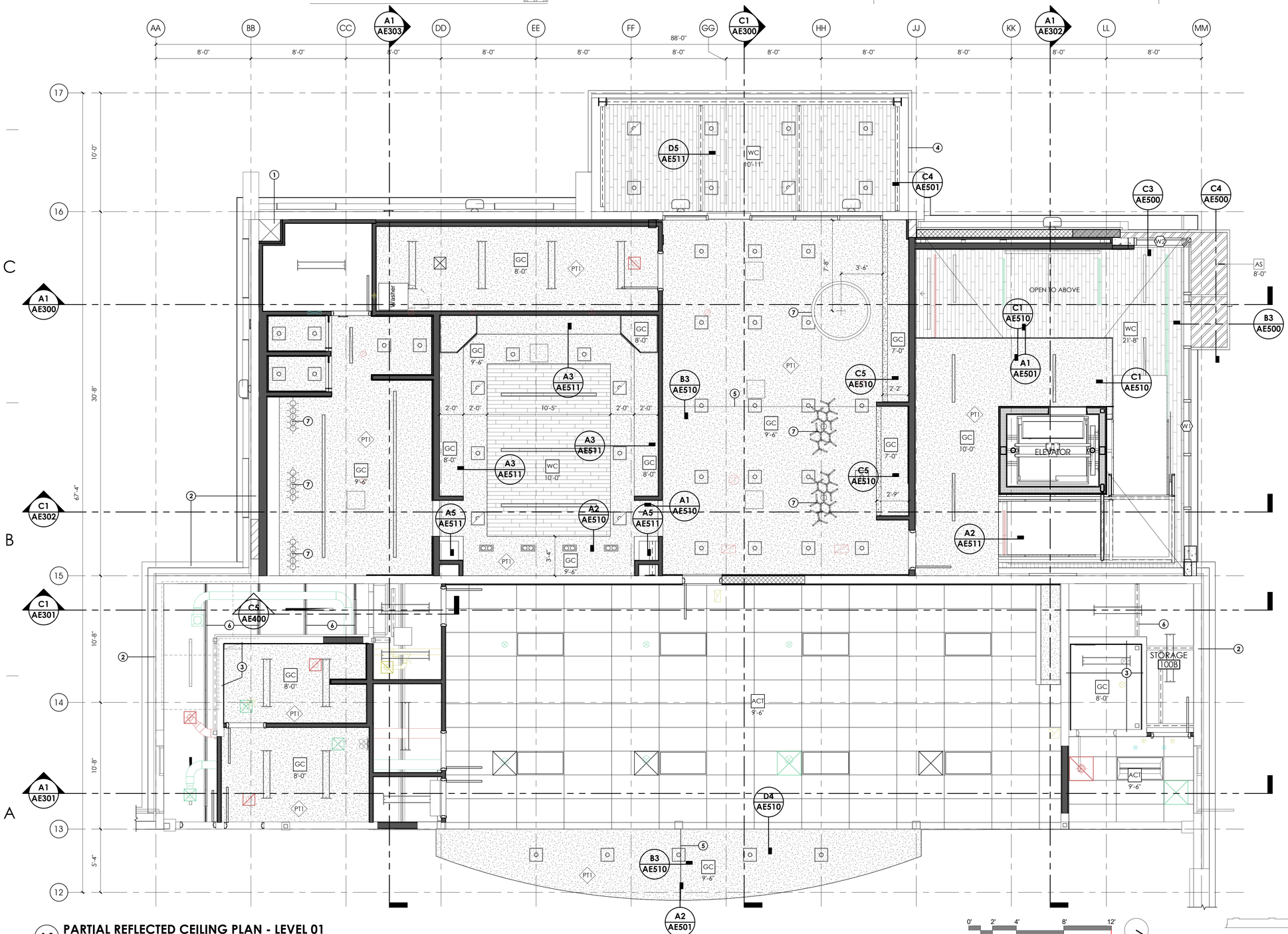

A1 **PARTIAL REFLECTED CEILING PLAN - LEVEL 01**
1/4" = 1'-0"

SCALE : 1/4" = 1'-0"

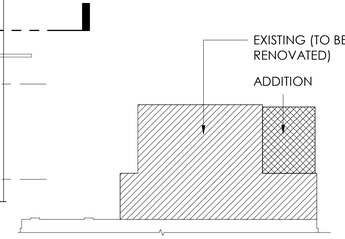

10/18/2021 4:29:54 PM S:\ajc users\ataylor\Revit Local Files\21 0928 - 1877 - Dumke Womens Gymnastics Facility V20_detached_ataylorUV5V2.rvt

ALL IDEAS, DESIGNS, ARRANGEMENTS AND PLANS INDICATED OR REPRESENTED BY THIS DRAWING ARE OWNED BY AND THE PROPERTY OF AJC ARCHITECTS PC AND WERE CREATED, EVOLVED AND DEVELOPED FOR USE ON AND IN CONNECTION WITH THE SPECIFIED PROJECT. NONE OF THE IDEAS, DESIGNS, ARRANGEMENTS OR PLANS INDICATED OR REPRESENTED BY THIS DRAWING MAY BE USED BY OR DISCLOSED TO ANY PERSON, FIRM, OR CORPORATION FOR ANY PURPOSE WHATSOEVER WITHOUT WRITTEN CONSENT OF AJC ARCHITECTS PC. WRITTEN DIMENSIONS ON THESE DRAWINGS SHALL HAVE PRECEDENCE OVER SCALE DIMENSIONS. CONTRACTORS SHALL VERIFY AND BE RESPONSIBLE FOR ALL DIMENSIONS AND CONDITIONS ON THE JOB AND THIS OFFICE MUST BE NOTIFIED OF ANY VARIATION FROM THE DIMENSIONS AND CONDITIONS SHOWN BY THESE DRAWINGS. WARNING: REPRODUCTION HEREOF IS A CRIMINAL OFFENSE UNDER 18 U.S.C. 506. UNAUTHORIZED DISCLOSURE MAY CONSTITUTE TRADE SECRET MISAPPROPRIATION IN VIOLATION OF UC 24.2.31.1 ET. SEQ. AND OTHER LAWS.

ARCHITECT 1877
ajc architects
703 east 1700 south
salt lake city, utah 84105
ph: 801.466.8818
fx: 801.466.4411
www.ajcarchitects.com

ARCHITECT / CONSULTANT

STATE OF UTAH
KENT R. RIGBY
No. 135090
05.18.2020
LICENSED ARCHITECT

OWNER INFORMATION

PROJECT DESCRIPTION

DUMKE GYMNASTICS TRAINING CENTER

1825 E. SOUTH CAMPUS DRIVE
SALT LAKE CITY, UT 84112

AHJ STAMP

SHEET NAME:
PARTIAL REFLECTED CEILING PLAN - LEVEL 01

REVISIONS

MARK	DATE	DESCRIPTION

ISSUE DATA

ISSUE DATE:	10.18.21
ISSUE TYPE:	CD
DRAWN BY:	AT|DG
CHECKED BY:	KR
PROJECT#:	1877

SHEET NUMBER:

AE122

CEILING FINISHES

GYP. CEILING	GC
ACOUSTIC TILE CEILING	ACT
EXT. WOOD LOOK METAL SOFFIT	WC
ALUMINUM SOFFIT	AS

LIGHT FIXTURES

HVAC EQUIPMENT

GENERAL NOTES:

- SEE SHEET GI003 FOR GENERAL NOTES LEGENDS AND ABBREVIATIONS.
- SEE GI002 FOR DRAWING INDEX.
- DO NOT SCALE DRAWINGS.
- CONTRACTOR / SUBCONTRACTOR SHALL VERIFY ALL DIMENSIONS AND CONDITIONS BEFORE BEGINNING WORK, AND SHALL REPORT TO THE ARCHITECT ANY ERRORS, INCONSISTENCIES OR OMISSIONS BEFORE BEGINNING WORK. SEE GENERAL NOTES AND SPECIFICATIONS.
- NOTE: ALL CEILINGS SHOWN ON THIS SHEET ARE NEW CEILINGS.

KEYED NOTES:

1 EXISTING CONCRETE BEAM.
2 EXISTING INTERIOR WALLS TO REMAIN. PROTECT. REPAINT.
3 EXISTING CONCRETE COLUMN TO REMAIN. PROTECT.
4 EXISTING STEEL COLUMN TO REMAIN. PROTECT. PAINT.
5 EXPOSED STRUCTURE. PAINT. SEE STRUCTURAL DRAWINGS.
6 CUSTOM STACKING PLAM DOOR TRACKS.

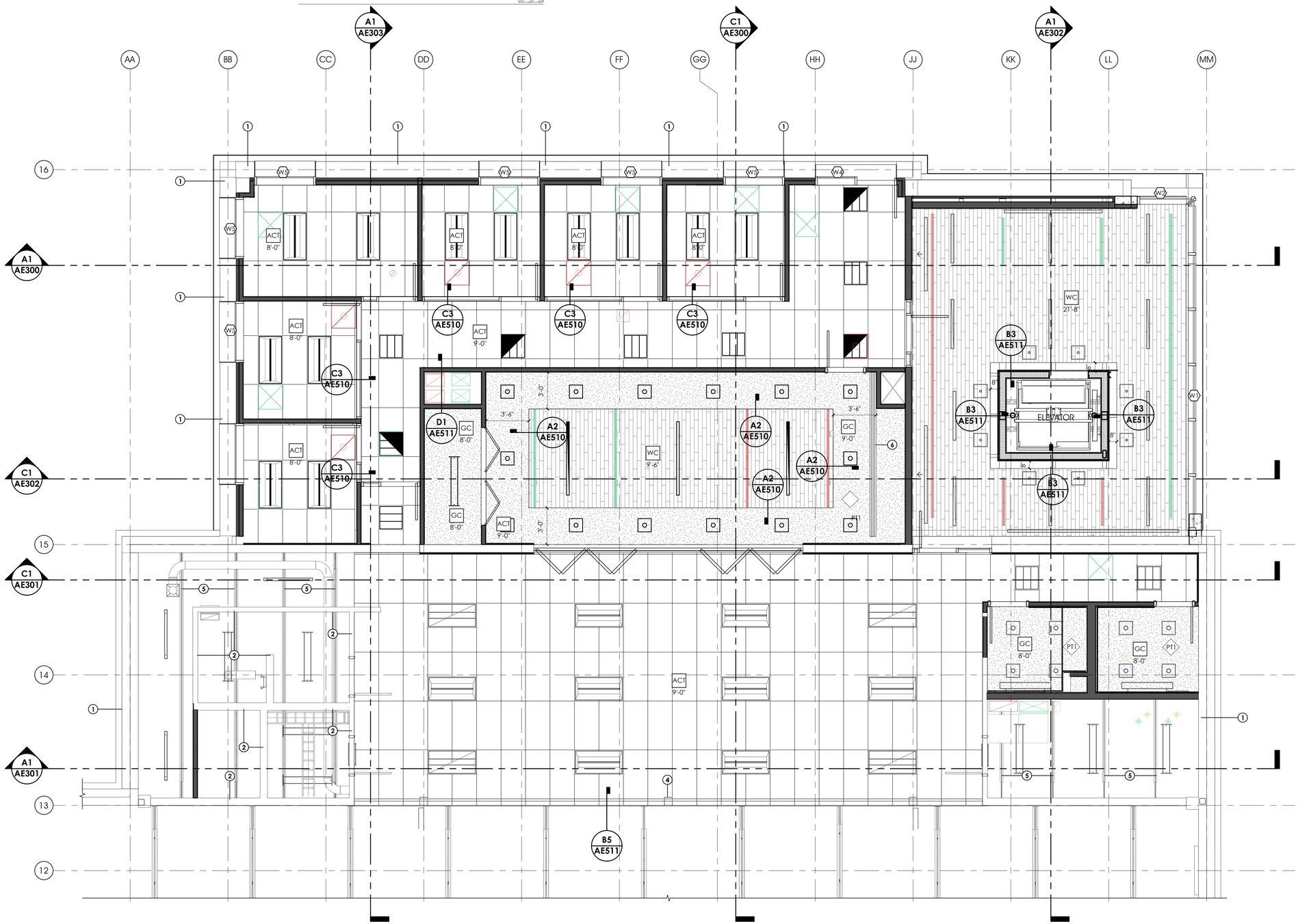

A1 **PARTIAL REFLECTED CEILING PLAN - LEVEL 02**
1/4" = 1'-0"

0' 2' 4' 8' 12'
SCALE : 1/4" = 1'-0"

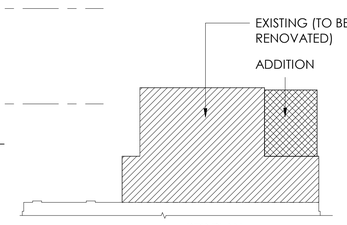

KEY PLAN

ARCHITECT 1877
ajc architects
703 east 1700 south
salt lake city, utah 84105
ph: 801.466.8818
fx: 801.466.4411
www.ajcarchitects.com

ARCHITECT / CONSULTANT

STATE OF UTAH
KENT R. RIGBY
No. 135090
05.18.2020
LICENSED ARCHITECT

OWNER INFORMATION

PROJECT DESCRIPTION

DUMKE GYMNASTICS TRAINING CENTER
1825 E. SOUTH CAMPUS DRIVE
SALT LAKE CITY, UT 84112

AHJ STAMP

SHEET NAME:
PARTIAL REFLECTED CEILING PLAN - LEVEL 02

REVISIONS

MARK	DATE	DESCRIPTION

ISSUE DATA

ISSUE DATE:	10.18.21
ISSUE TYPE:	CD
DRAWN BY:	AT|DG
CHECKED BY:	KR
PROJECT#:	1877

SHEET NUMBER:
AE123

10/18/2021 4:29:58 PM S:\ajc users\ataylor\Revit Local Files\21 0928 - 1877 - Dumke Womens Gymnastics Facility V20_detached_ataylorUV5V2.rvt

ALL IDEAS, DESIGNS, ARRANGEMENTS AND PLANS INDICATED OR REPRESENTED BY THIS DRAWING ARE OWNED BY AND THE PROPERTY OF AJC ARCHITECTS PC AND WERE CREATED, EVOLVED, AND DEVELOPED FOR USE ON AND IN CONNECTION WITH THE SPECIFIED PROJECT. NONE OF THE IDEAS, DESIGNS, ARRANGEMENTS OR PLANS INDICATED OR REPRESENTED BY THIS DRAWING MAY BE USED BY OR DISCLOSED TO ANY PERSON, FIRM, OR CORPORATION FOR ANY PURPOSE WHATSOEVER WITHOUT WRITTEN CONSENT OF AJC ARCHITECTS PC. WRITTEN DIMENSIONS ON THESE DRAWINGS SHALL HAVE PRECEDENCE OVER SCALE DIMENSIONS. CONTRACTORS SHALL VERIFY AND BE RESPONSIBLE FOR ALL DIMENSIONS AND CONDITIONS ON THE JOB AND THIS OFFICE MUST BE NOTIFIED OF ANY VARIATION FROM THE DIMENSIONS AND CONDITIONS SHOWN BY THESE DRAWINGS. WARNING: REPRODUCTION HEREOF IS A CRIMINAL OFFENSE UNDER 18 U.S.C. 506. UNAUTHORIZED DISCLOSURE MAY CONSTITUTE TRADE SECRET MISAPPROPRIATION IN VIOLATION OF 17 U.S.C. § 1 ET. SEQ. AND OTHER LAWS.

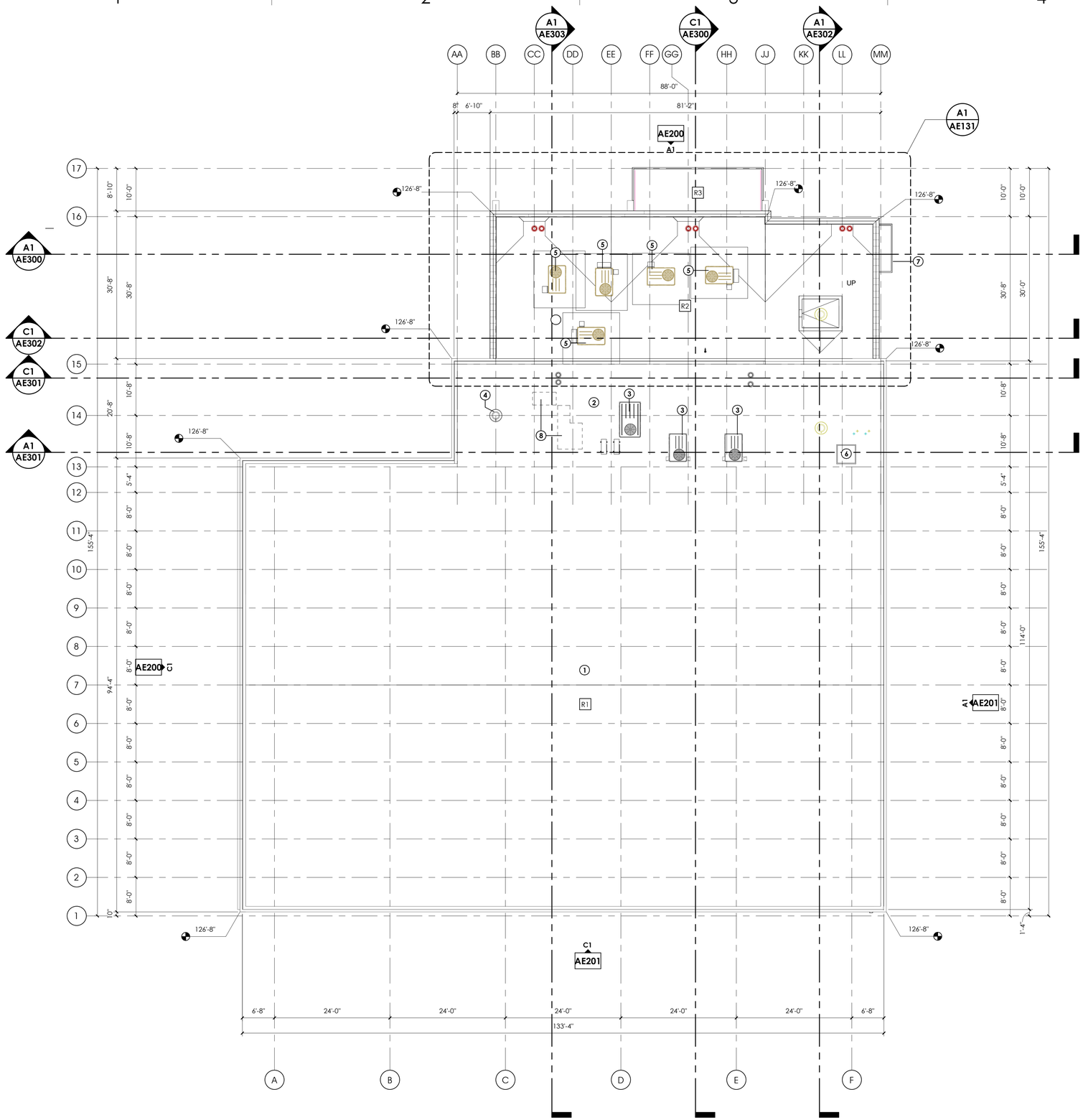

A1 **OVERALL ROOF PLAN**
3/32" = 1'-0"

SCALE : 3/32" = 1'-0"

GENERAL NOTES:

- SEE SHEET GI003 FOR GENERAL NOTES LEGENDS AND ABBREVIATIONS.
- SEE GI002 FOR DRAWING INDEX.
- DO NOT SCALE DRAWINGS.
- CONTRACTOR / SUBCONTRACTOR SHALL VERIFY ALL DIMENSIONS AND CONDITIONS BEFORE BEGINNING WORK, AND SHALL REPORT TO THE ARCHITECT ANY ERRORS, INCONSISTENCIES OR OMISSIONS BEFORE BEGINNING WORK. SEE GENERAL NOTES AND SPECIFICATIONS.

ROOF TYPES

EXISTING ROOFING W/ NEW MEMBRANE COATING	R1
NEW ROOFING SYSTEM	R2
NEW ROOF W/ PAVERS	R3

KEYED NOTES:

1	EXISTING ROOFING SYSTEM OVER THE GYMNASIUM AREA TO BE RECOATED. SEE SPECIFICATIONS.
2	EXISTING ROOFING SYSTEM OVER THE NEW MULTIPURPOSE ROOM TO BE RECOATED. SEE SPECIFICATIONS.
3	EXISTING ROOFTOP UNIT. PRESERVE AND PROTECT.
4	EXISTING MECHANICAL EQUIPMENT. PRESERVE AND PROTECT.
5	NEW ROOFTOP UNIT. SEE MECHANICAL DRAWINGS.
6	EXISTING ROOF HATCH. FIELD VERIFY LOCATION.
7	STEEL CANOPY. PAINTED.
8	INFILL MTL. ROOF DECK & REROOF @ REMOVED RTU LOCATIONS. R VALUE OF ADDED INSULATION TO MATCH THAT OF ROOF ASSEMBLY R2.

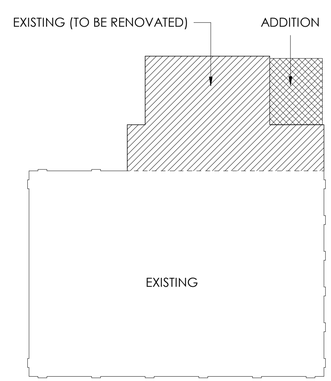

KEY PLAN

ARCHITECT 1877
ajc architects
703 east 1700 south
salt lake city, utah 84105
ph: 801.466.8818
fx: 801.466.4411
www.ajcarchitects.com

ARCHITECT / CONSULTANT

STATE OF UTAH
KENT B. RIGBY
No. 135096
05.18.2020
LICENSED ARCHITECT

OWNER INFORMATION

PROJECT DESCRIPTION

DUMKE GYMNASTICS TRAINING CENTER

1825 E. SOUTH CAMPUS DRIVE
SALT LAKE CITY, UT 84112

AHJ STAMP

SHEET NAME:
OVERALL ROOF PLAN

REVISIONS

MARK	DATE	DESCRIPTION

ISSUE DATA

ISSUE DATE:	10.18.21
ISSUE TYPE:	CD
DRAWN BY:	AT|DG
CHECKED BY:	KR
PROJECT#:	1877

SHEET NUMBER:
AE130

10/18/2021 4:30:02 PM S:\ajc users\ataylor\Revit Local Files\21 0928 - 1877 - Dumke Womens Gymnastics Facility V20_detached_ataylorUV5V2.rvt
ALL IDEAS, DESIGNS, ARRANGEMENTS AND PLANS INDICATED OR REPRESENTED BY THIS DRAWING ARE OWNED BY AND THE PROPERTY OF AJC ARCHITECTS PC AND WERE CREATED, EVOLVED, AND DEVELOPED FOR USE ON AND IN CONNECTION WITH THE SPECIFIED PROJECT. NONE OF THE IDEAS, DESIGNS, ARRANGEMENTS OR PLANS INDICATED IN OR REPRESENTED BY THIS DRAWING, ALL OF WHICH ARE PROPRIETARY TO AJC ARCHITECTS PC, SHALL BE USED BY OR DISCLOSED TO ANY PERSON, FIRM, OR CORPORATION FOR ANY PURPOSE WHATSOEVER WITHOUT WRITTEN CONSENT OF AJC ARCHITECTS PC. WRITTEN DIMENSIONS ON THESE DRAWINGS SHALL HAVE PRECEDENCE OVER SCALE DIMENSIONS. CONTRACTORS SHALL VERIFY AND BE RESPONSIBLE FOR ALL DIMENSIONS AND CONDITIONS ON THE JOB AND THIS OFFICE MUST BE NOTIFIED OF ANY VARIATION FROM THE DIMENSIONS AND CONDITIONS SHOWN BY THESE DRAWINGS. WARNING: REPRODUCTION HEREOF IS A CRIMINAL OFFENSE UNDER 18 U.S.C. 506. UNAUTHORIZED DISCLOSURE MAY CONSTITUTE TRADE SECRET MISAPPROPRIATION IN VIOLATION OF 17 U.S.C. § 1.61 ET. SEQ. AND OTHER LAWS.

10/18/2021 4:30:06 PM S:\ajc users\taylor\Revit Local Files\21 0928 - 1877 - Dumke Womens Gymnastics Facility V20_detached_taylorLV5V2.rvt
ALL IDEAS, DESIGNS, ARRANGEMENTS AND PLANS INDICATED OR REPRESENTED BY THIS DRAWING ARE OWNED BY AND THE PROPERTY OF AJC ARCHITECTS PC AND WERE CREATED, EVOLVED, AND DEVELOPED FOR USE ON AND IN CONNECTION WITH THE SPECIFIED PROJECT. NONE OF THE IDEAS, DESIGNS, ARRANGEMENTS OR PLANS SHALL BE USED BY OR DISCLOSED TO ANY PERSON, FIRM, OR CORPORATION FOR ANY PURPOSE WHATSOEVER WITHOUT WRITTEN CONSENT OF AJC ARCHITECTS PC. WRITTEN DIMENSIONS ON THESE DRAWINGS SHALL HAVE PRECEDENCE OVER SCALE DIMENSIONS. CONTRACTORS SHALL VERIFY AND BE RESPONSIBLE FOR ALL DIMENSIONS AND CONDITIONS ON THE JOB AND THIS OFFICE MUST BE NOTIFIED OF ANY VARIATION FROM THE DIMENSIONS AND CONDITIONS SHOWN BY THESE DRAWINGS. WARNING: REPRODUCTION HEREOF IS A CRIMINAL OFFENSE UNDER 18 U.S.C. SEC. 506. UNAUTHORIZED DISCLOSURE MAY CONSTITUTE TRADE SECRET MISAPPROPRIATION IN VIOLATION OF UC 24.2.3.1.1 ET. SEQ. AND OTHER LAWS.

ROOF TYPES

EXISTING ROOFING W/ NEW MEMBRANE COATING	R1
NEW ROOFING SYSTEM	R2
NEW ROOF W/ PAVERS	R3

GENERAL NOTES:

- SEE SHEET GI003 FOR GENERAL NOTES LEGENDS AND ABBREVIATIONS.
- SEE GI002 FOR DRAWING INDEX.
- DO NOT SCALE DRAWINGS.
- CONTRACTOR / SUBCONTRACTOR SHALL VERIFY ALL DIMENSIONS AND CONDITIONS BEFORE BEGINNING WORK, AND SHALL REPORT TO THE ARCHITECT ANY ERRORS, INCONSISTENCIES OR OMISSIONS BEFORE BEGINNING WORK. SEE GENERAL NOTES AND SPECIFICATIONS.
- NOTE: ALL CEILINGS SHOWN ON THIS SHEET ARE NEW CEILINGS.

KEYED NOTES:

1	NEW ROOFTOP UNIT. SEE MECHANICAL DRAWINGS.
2	EXISTING ROOFTOP UNIT. PRESERVE AND PROTECT.
3	EXISTING MECHANICAL EQUIPMENT. PRESERVE AND PROTECT.
4	TAPERED INSULATION CRICKET
5	HEAVY GAUGE ALUM. SCUPPER FLASHING.
6	EXISTING ROOF DRAIN
7	EXISTING PARAPET CAP FLASHING
8	GUTTER BELOW
9	INFILL MTL. ROOF DECK & REROOF @ REMOVED RTU LOCATIONS. R VALUE OF ADDED INSULATION TO MATCH THAT OF ROOF ASSEMBLY R2.
10	ELEVATOR OVERUN 'DOG HOUSE'

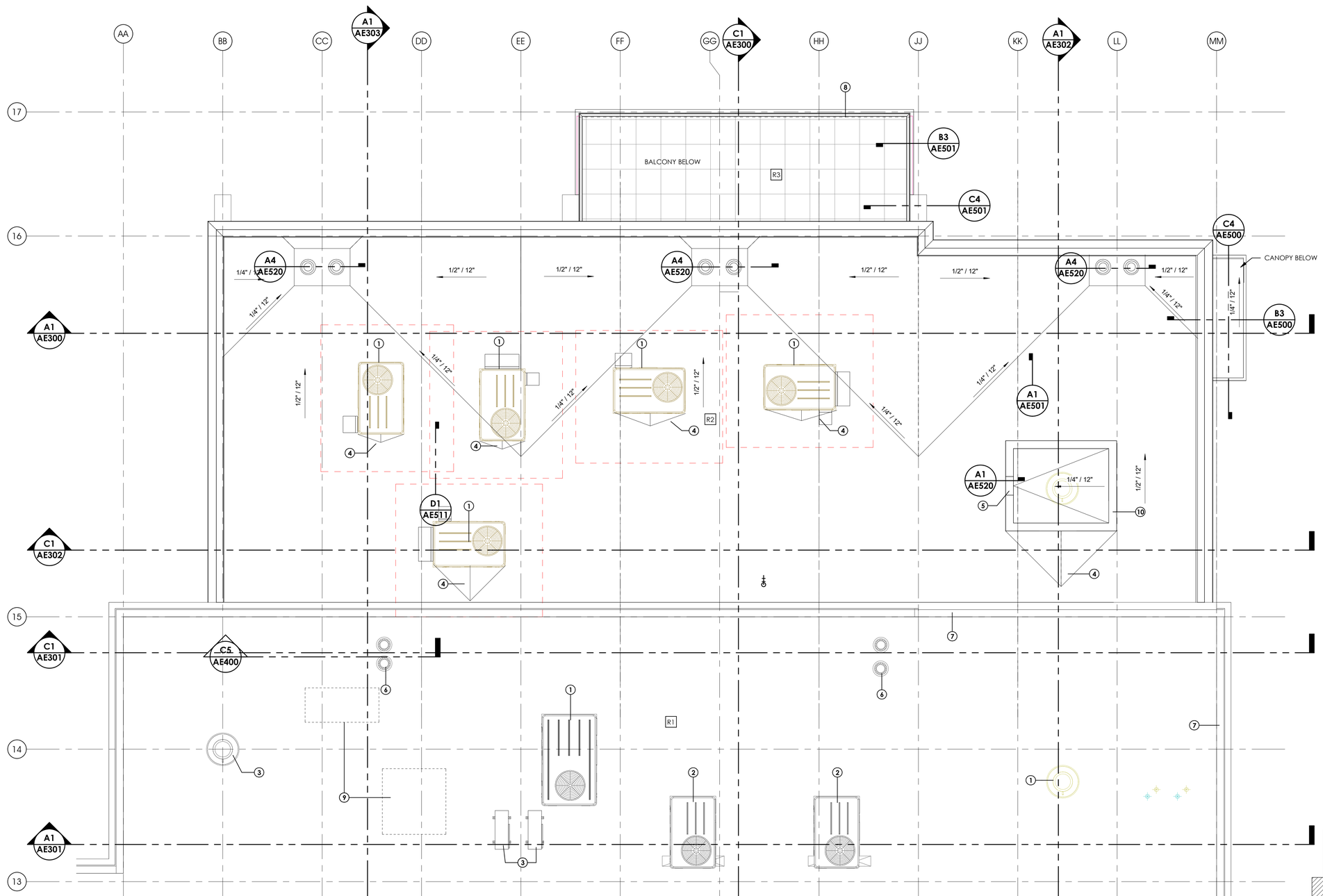

A1 **PARTIAL PLAN - ROOF**
1/4" = 1'-0"

SCALE : 1/4" = 1'-0"

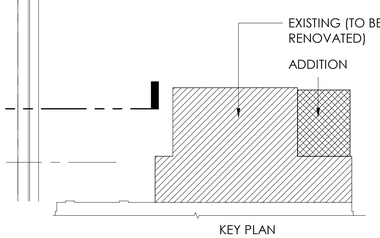

ARCHITECT 1877
ajc architects
703 east 1700 south
salt lake city, utah 84105
ph: 801.466.8818
fx: 801.466.4411
www.ajcarchitects.com

ARCHITECT / CONSULTANT

STATE OF UTAH
KENT R. RIGBY
No. 135090
05.18.2020
LICENSED ARCHITECT

OWNER INFORMATION

PROJECT DESCRIPTION

DUMKE GYMNASTICS TRAINING CENTER

1825 E. SOUTH CAMPUS DRIVE
SALT LAKE CITY, UT 84112

AHJ STAMP

SHEET NAME:
PARTIAL ROOF PLAN

REVISIONS

MARK	DATE	DESCRIPTION

ISSUE DATA

ISSUE DATE:	10.18.21
ISSUE TYPE:	CD
DRAWN BY:	AT|DG
CHECKED BY:	KR
PROJECT#:	1877

SHEET NUMBER:
AE131

EXT. FINISH LEGEND:

- B — ATLAS BRICK — MATCH COLOR, COURSING AND MORTAR TO EXISTING BRICK
- C1 — ARCHITECTURAL CONCRETE — SEALED W/ PENETRATING WATER REPELLENT; REFER TO SPECIFICATION
- C2 — BOARDFORMED CONCRETE — MATCH EXISTING BOARD FORMED CONC; SEALED W/ PENETRATING WATER REPELLENT; REFER TO SPECIFICATION

GENERAL NOTES:

- SEE SHEET GI003 FOR GENERAL NOTES LEGENDS AND ABBREVIATIONS.
- SEE GI002 FOR DRAWING INDEX.
- DO NOT SCALE DRAWINGS.
- CONTRACTOR / SUBCONTRACTOR SHALL VERIFY ALL DIMENSIONS AND CONDITIONS BEFORE BEGINNING WORK, AND SHALL REPORT TO THE ARCHITECT ANY ERRORS, INCONSISTENCIES OR OMISSIONS BEFORE BEGINNING WORK. SEE GENERAL NOTES AND SPECIFICATIONS.

KEYED NOTES:

1	EXISTING CONCRETE.
2	EXISTING 8" ATLAS BRICK WALL.
3	ROOFTOP UNIT. SEE MECHANICAL DRAWINGS.
4	MECHINCAL EQUIPMENT. SEE MECHANICAL DRAWINGS.
5	HOSE BIB. SEE PLUMBING DRAWINGS.
6	STEEL GUARDRAIL. PAINTED
7	EXISTING CONCRETE COLUMN TO REMAIN. PROTECT.
8	MODULAR WELDED WIRE PLANT SUPPORT SYSTEM. SEE SPECIFICATIONS.
9	ELEVATOR EXHAUST FAN. SEE MECHANICAL DRAWINGS.
10	STEEL CANOPY. PAINTED.
11	METAL WINDOW SHROUD; PTD TO MATCH MULLION FINISH
12	EXPOSED STEEL CHANNEL. PAINTED.
13	EXISTING DOWNSPOUT NOZZLE.
14	EXTERIOR LIGHTING, SEE ELECTRICAL DRAWINGS.
15	SECURITY CAMERA; SEE ELECTRICAL DRAWINGS
16	RAIN WATER LEADER

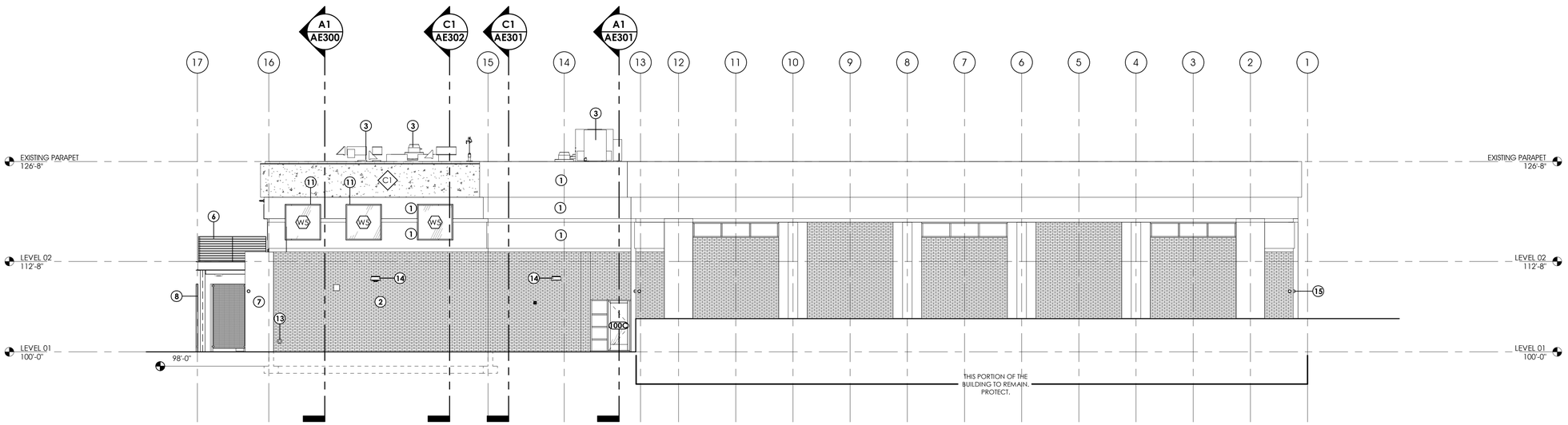

C1 SOUTH ELEVATION
1/8" = 1'-0"

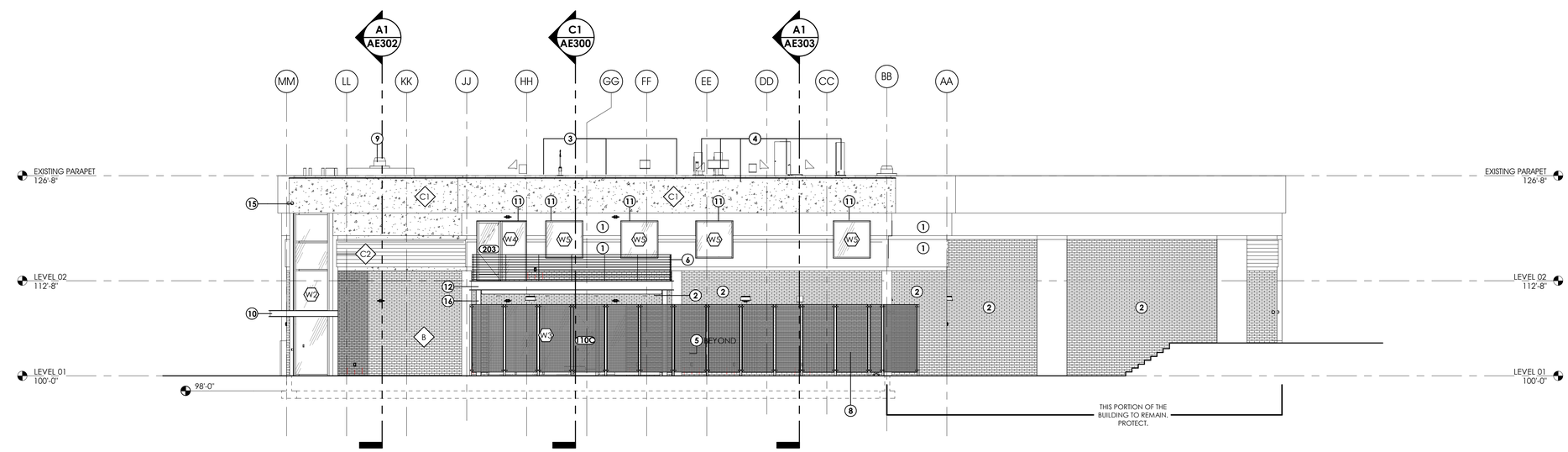

A1 WEST ELEVATION
1/8" = 1'-0"

ARCHITECT 1877

ajc architects

703 east 1700 south
salt lake city, utah 84105
ph: 801.466.8818
fx: 801.466.4411
www.ajcarchitects.com

ARCHITECT / CONSULTANT

STATE OF UTAH
KENT B. RIGBY
No. 135090
05.18.2020
LICENSED ARCHITECT

OWNER INFORMATION

PROJECT DESCRIPTION

DUMKE GYMNASTICS TRAINING CENTER

1825 E. SOUTH CAMPUS DRIVE
SALT LAKE CITY, UT 84112

AHJ STAMP

SHEET NAME:
ELEVATIONS

REVISIONS

MARK	DATE	DESCRIPTION

ISSUE DATA

ISSUE DATE:	10.18.21
ISSUE TYPE:	CD
DRAWN BY:	AT|DG
CHECKED BY:	KR
PROJECT#:	1877

SHEET NUMBER:

AE200

10/18/2021 4:30:16 PM S:\ajc users\ataylor\Revit Local Files\21 0928 - 1877 - Dumke Womens Gymnastics Facility V20_detached_ataylorUV5V2.rvt

ALL IDEAS, DESIGNS, ARRANGEMENTS AND PLANS INDICATED OR REPRESENTED BY THIS DRAWING ARE OWNED BY AND THE PROPERTY OF AJC ARCHITECTS PC AND WERE CREATED, EVOLVED, AND DEVELOPED FOR USE ON AND IN CONNECTION WITH THE SPECIFIED PROJECT. NONE OF THE IDEAS, DESIGNS, ARRANGEMENTS OR PLANS INDICATED OR REPRESENTED BY THIS DRAWING SHALL BE USED BY OR DISCLOSED TO ANY PERSON, FIRM, OR CORPORATION FOR ANY PURPOSE WHATSOEVER WITHOUT WRITTEN CONSENT OF AJC ARCHITECTS PC. WRITTEN DIMENSIONS ON THESE DRAWINGS SHALL HAVE PRECEDENCE OVER SCALE DIMENSIONS. CONTRACTORS SHALL VERIFY AND BE RESPONSIBLE FOR ALL DIMENSIONS AND CONDITIONS ON THE JOB AND THIS OFFICE MUST BE NOTIFIED OF ANY VARIATION FROM THE DIMENSIONS AND CONDITIONS SHOWN BY THESE DRAWINGS. WARNING: REPRODUCTION HEREOF IS A CRIMINAL OFFENSE UNDER 18 U.S.C. 506. UNAUTHORIZED DISCLOSURE MAY CONSTITUTE TRADE SECRET MISAPPROPRIATION IN VIOLATION OF UC 24.2.3.11.1 ET. SEQ. AND OTHER LAWS.

EXT. FINISH LEGEND:

- B — ATLAS BRICK — MATCH COLOR, COURSING AND MORTAR TO EXISTING BRICK
- C1 — ARCHITECTURAL CONCRETE — SEALED W/ PENETRATING WATER REPELLENT; REFER TO SPECIFICATION
- C2 — BOARDFORMED CONCRETE — MATCH EXISTING BOARD FORMED CONC; SEALED W/ PENETRATING WATER REPELLENT; REFER TO SPECIFICATION

GENERAL NOTES:

- SEE SHEET GI003 FOR GENERAL NOTES LEGENDS AND ABBREVIATIONS.
- SEE GI002 FOR DRAWING INDEX.
- DO NOT SCALE DRAWINGS.
- CONTRACTOR / SUBCONTRACTOR SHALL VERIFY ALL DIMENSIONS AND CONDITIONS BEFORE BEGINNING WORK, AND SHALL REPORT TO THE ARCHITECT ANY ERRORS, INCONSISTENCIES OR OMISSIONS BEFORE BEGINNING WORK. SEE GENERAL NOTES AND SPECIFICATIONS.

KEYED NOTES:

1	EXISTING 8" ATLAS BRICK WALL.
2	EXISTING CONCRETE.
3	MECHINCAL EQUIPMENT. SEE MECHANICAL DRAWINGS.
4	STEEL CANOPY. PAINTED.
5	STEEL GUARDRAIL. PAINTED
6	ELEVATOR EXHAUST FAN. SEE MECHANICAL DRAWINGS.
7	DEMO EXISTING CANOPY ABOVE DOOR. PATCH AND REPAIR WALL SURFACE.
8	EXPOSED STEEL CHANNEL. PAINTED.
9	MODULAR WELDED WIRE PLANT SUPPORT SYSTEM. SEE SPECIFICATIONS.
10	SECURITY CAMERA; SEE ELECTRICAL DRAWINGS

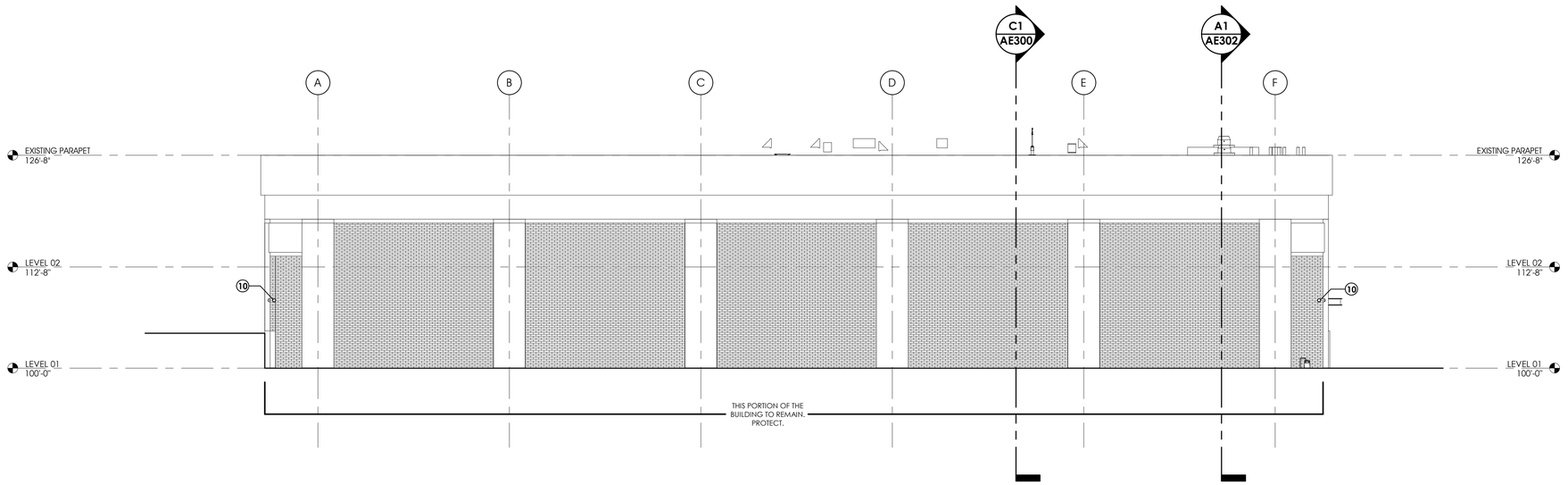

C1 EAST ELEVATION
1/8" = 1'-0"

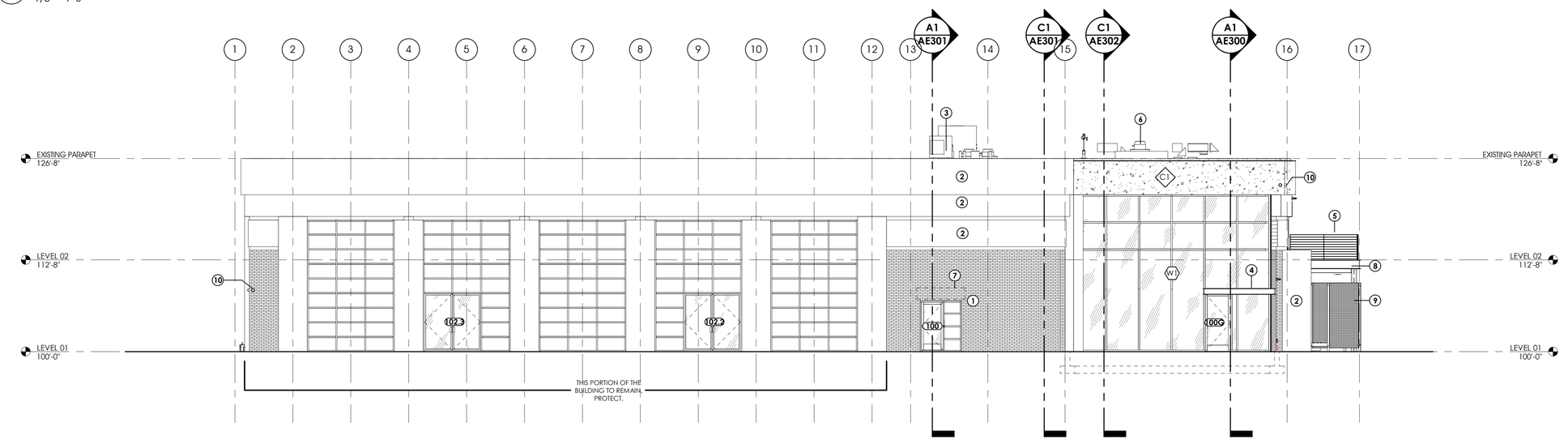

A1 NORTH ELEVATION
1/8" = 1'-0"

ARCHITECT 1877

ajc architects

703 east 1700 south
salt lake city, utah 84105
ph: 801.466.8818
fx: 801.466.4411
www.ajcarchitects.com

ARCHITECT / CONSULTANT

STATE OF UTAH — KENT R. RIGBY — No. 135090 — 05.18.2020 — LICENSED ARCHITECT

OWNER INFORMATION

PROJECT DESCRIPTION

DUMKE GYMNASTICS TRAINING CENTER

1825 E. SOUTH CAMPUS DRIVE
SALT LAKE CITY, UT 84112

AHJ STAMP

SHEET NAME:
ELEVATIONS

REVISIONS

MARK	DATE	DESCRIPTION

ISSUE DATA

ISSUE DATE:	10.18.21
ISSUE TYPE:	CD
DRAWN BY:	AT|DG
CHECKED BY:	KR
PROJECT#:	1877

SHEET NUMBER:
AE201

10/18/2021 4:30:23 PM S:\ajc users\ataylor\Revit Local Files\21 0928 - 1877 - Dumke Womens Gymnastics Facility V20_detached_ataylorUV5V2.rvt

ALL IDEAS, DESIGNS, ARRANGEMENTS AND PLANS INDICATED OR REPRESENTED BY THIS DRAWING ARE OWNED BY AND THE PROPERTY OF AJC ARCHITECTS PC AND WERE CREATED, EVOLVED, AND DEVELOPED FOR USE ON AND IN CONNECTION WITH THE SPECIFIED PROJECT. NONE OF THE IDEAS, DESIGNS, ARRANGEMENTS OR PLANS INDICATED IN OR REPRESENTED BY THIS DRAWING SHALL BE USED BY OR DISCLOSED TO ANY PERSON, FIRM, OR CORPORATION FOR ANY PURPOSE WHATSOEVER WITHOUT WRITTEN CONSENT OF AJC ARCHITECTS PC. WRITTEN DIMENSIONS ON THESE DRAWINGS SHALL HAVE PRECEDENCE OVER SCALE DIMENSIONS. CONTRACTORS SHALL VERIFY AND BE RESPONSIBLE FOR ALL DIMENSIONS AND CONDITIONS ON THE JOB AND THIS OFFICE MUST BE NOTIFIED OF ANY VARIATION FROM THE DIMENSIONS AND CONDITIONS SHOWN BY THESE DRAWINGS. WARNING: REPRODUCTION HEREOF IS A CRIMINAL OFFENSE UNDER 18 U.S.C. 506. UNAUTHORIZED DISCLOSURE MAY CONSTITUTE TRADE SECRET MISAPPROPRIATION IN VIOLATION OF 17 U.S.C. 24.2-311.1 ET. SEQ. AND OTHER LAWS.

10/18/2021 4:30:27 PM S:\ajc users\taylor\Revit Local Files\21 0928 - 1877 - Dumke Womens Gymnastics Facility V20_detached_ataylorUV5V2.rvt

ALL IDEAS, DESIGNS, ARRANGEMENTS AND PLANS INDICATED OR REPRESENTED BY THIS DRAWING ARE OWNED BY, AND THE PROPERTY OF AJC ARCHITECTS PC, AND WERE CREATED, EVOLVED, AND DEVELOPED FOR USE ON AND IN CONNECTION WITH THE SPECIFIED PROJECT. NONE OF THE IDEAS, DESIGNS, ARRANGEMENTS OR PLANS INDICATED OR REPRESENTED BY THIS DRAWING MAY BE USED BY OR DISCLOSED TO ANY PERSON, FIRM, OR CORPORATION FOR ANY PURPOSE WHATSOEVER WITHOUT WRITTEN CONSENT OF AJC ARCHITECTS PC. WRITTEN DIMENSIONS ON THESE DRAWINGS SHALL HAVE PRECEDENCE OVER SCALE DIMENSIONS. CONTRACTORS SHALL VERIFY AND BE RESPONSIBLE FOR ALL DIMENSIONS AND CONDITIONS ON THE JOB AND THIS OFFICE MUST BE NOTIFIED OF ANY VARIATION FROM THE DIMENSIONS AND CONDITIONS SHOWN BY THESE DRAWINGS. WARNING: REPRODUCTION HEREOF IS A CRIMINAL OFFENSE UNDER 18 U.S.C. 506. UNAUTHORIZED DISCLOSURE MAY CONSTITUTE TRADE SECRET MISAPPROPRIATION IN VIOLATION OF 17 U.S.C. § 1 ET. SEQ. AND OTHER LAWS.

GENERAL NOTES:

- SEE SHEET GI003 FOR GENERAL NOTES LEGENDS AND ABBREVIATIONS.
- SEE GI002 FOR DRAWING INDEX.
- DO NOT SCALE DRAWINGS.
- CONTRACTOR / SUBCONTRACTOR SHALL VERIFY ALL DIMENSIONS AND CONDITIONS BEFORE BEGINNING WORK, AND SHALL REPORT TO THE ARCHITECT ANY ERRORS, INCONSISTENCIES OR OMISSIONS BEFORE BEGINNING WORK. SEE GENERAL NOTES AND SPECIFICATIONS.

KEYED NOTES:

1 EXISTING EXTERIOR WALLS, DOORS, AND WINDOWS TO REMAIN. PROTECT.
2 EXISTING ROOF TO REMAIN. PROTECT. RECOAT.
3 EXISTING ATLAS BRICK WALL TO REMAIN. PROTECT.
4 EXISTING FLOOR TO REMAIN. PROTECT.
5 REMOVE TOP 4" OF EXISTING FOUNDATION FOR NEW SLAB TO POUR OVER @ OPENINGS.

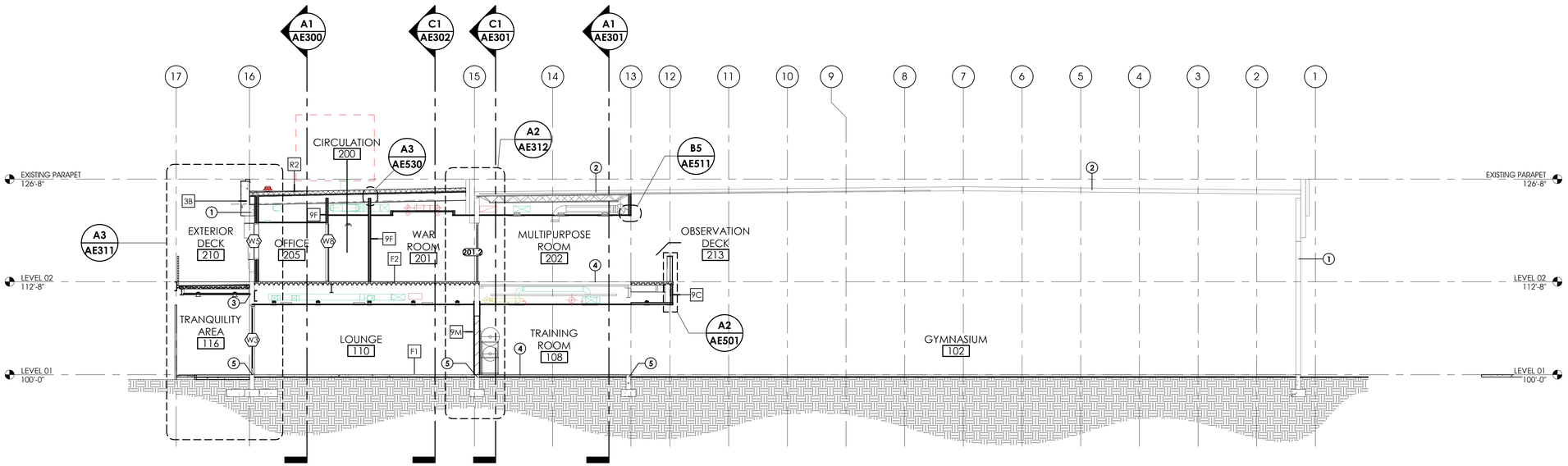

C1 **BUILDING SECTION @ GRID GG**
1/8" = 1'-0"

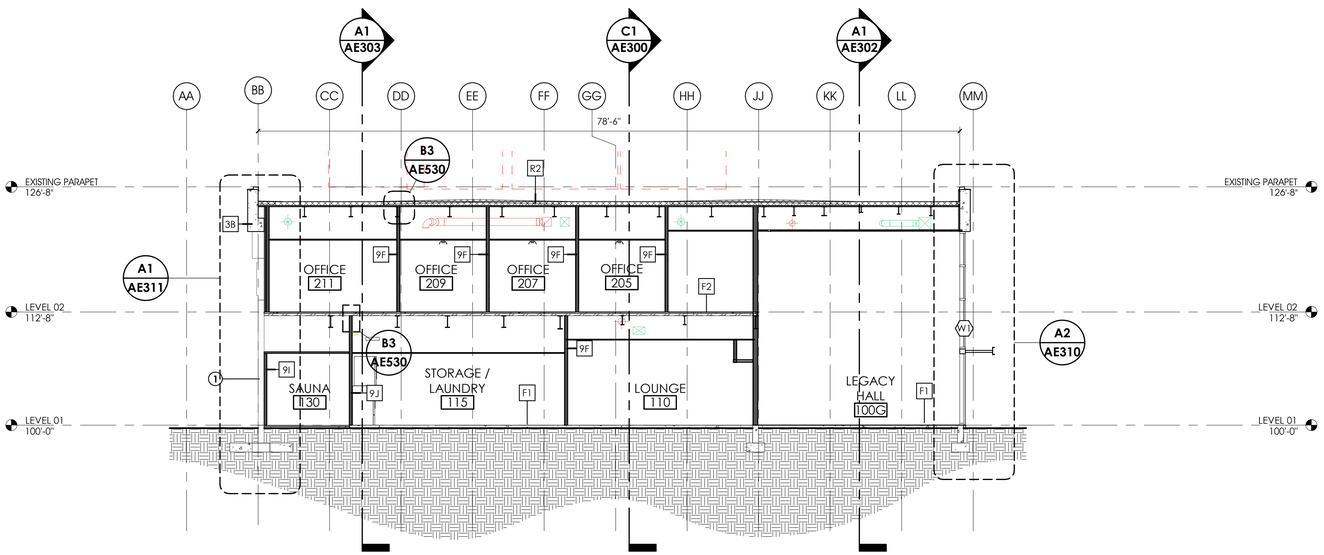

A1 **BUILDING SECTION @ GRID 16**
1/8" = 1'-0"

ARCHITECT 1877

ajc architects
703 east 1700 south
salt lake city, utah 84105
ph: 801.466.8818
fx: 801.466.4411
www.ajcarchitects.com

ARCHITECT / CONSULTANT

STATE OF UTAH
KENT R. RIGBY
No. 135090
05.18.2020
LICENSED ARCHITECT

OWNER INFORMATION

PROJECT DESCRIPTION

DUMKE GYMNASTICS TRAINING CENTER

1825 E. SOUTH CAMPUS DRIVE
SALT LAKE CITY, UT 84112

AHJ STAMP

SHEET NAME:
BUILDING SECTIONS

REVISIONS

MARK	DATE	DESCRIPTION

ISSUE DATA

ISSUE DATE:	10.18.21
ISSUE TYPE:	CD
DRAWN BY:	AT|DG
CHECKED BY:	KR
PROJECT#:	1877

SHEET NUMBER:
AE300

10/18/2021 4:30:31 PM S:\ajc users\taylor\Revit Local Files\21 0928 - 1877 - Dumke Womens Gymnastics Facility V20_detached_taylorUV5V2.rvt

ALL IDEAS, DESIGNS, ARRANGEMENTS AND PLANS INDICATED OR REPRESENTED BY THIS DRAWING ARE OWNED BY AND THE PROPERTY OF AJC ARCHITECTS PC AND WERE CREATED, EVOLVED, AND DEVELOPED FOR USE ON AND IN CONNECTION WITH THE SPECIFIED PROJECT. NONE OF THE IDEAS, DESIGNS, ARRANGEMENTS OR PLANS INDICATED IN OR REPRESENTED BY THIS DRAWING, WITHOUT THE PRIOR WRITTEN CONSENT OF AJC ARCHITECTS PC, SHALL BE USED BY OR DISCLOSED TO ANY PERSON, FIRM, OR CORPORATION FOR ANY PURPOSE WHATSOEVER. WRITTEN DIMENSIONS ON THESE DRAWINGS SHALL HAVE PRECEDENCE OVER SCALE DIMENSIONS. CONTRACTORS SHALL VERIFY AND BE RESPONSIBLE FOR ALL DIMENSIONS AND CONDITIONS ON THE JOB AND THIS OFFICE MUST BE NOTIFIED OF ANY VARIATION FROM THE DIMENSIONS AND CONDITIONS SHOWN BY THESE DRAWINGS. WARNING: REPRODUCTION HEREOF IS A CRIMINAL OFFENSE UNDER 18 U.S.C. 506. UNAUTHORIZED DISCLOSURE MAY CONSTITUTE TRADE SECRET MISAPPROPRIATION IN VIOLATION OF 12-24-2-3 I.C. ET. SEQ. AND OTHER LAWS.

GENERAL NOTES:

- SEE SHEET GI003 FOR GENERAL NOTES LEGENDS AND ABBREVIATIONS.
- SEE GI002 FOR DRAWING INDEX.
- DO NOT SCALE DRAWINGS.
- CONTRACTOR / SUBCONTRACTOR SHALL VERIFY ALL DIMENSIONS AND CONDITIONS BEFORE BEGINNING WORK, AND SHALL REPORT TO THE ARCHITECT ANY ERRORS, INCONSISTENCIES OR OMISSIONS BEFORE BEGINNING WORK. SEE GENERAL NOTES AND SPECIFICATIONS.

KEYED NOTES:

1 EXISTING ATLAS BRICK WALL TO REMAIN. PROTECT.
2 EXISTING INTERIOR WALLS TO REMAIN. PROTECT. REPAINT.
3 EXISTING STAIRS TO REMAIN. PROTECT.
4 EXISTING ROOF TO REMAIN. PROTECT. RECOAT.
5 EXISTING CONCRETE BEAM.
6 EXISTING FLOOR TO REMAIN. PROTECT.

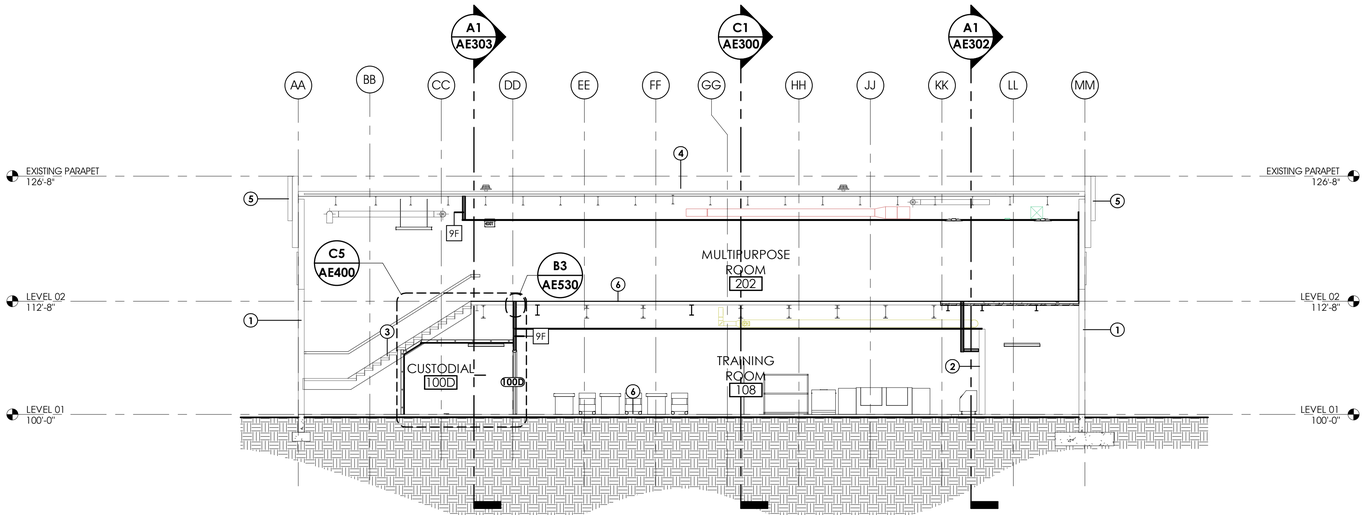

C1 BUILDING SECTION @ GRID 14.5
1/8" = 1'-0"

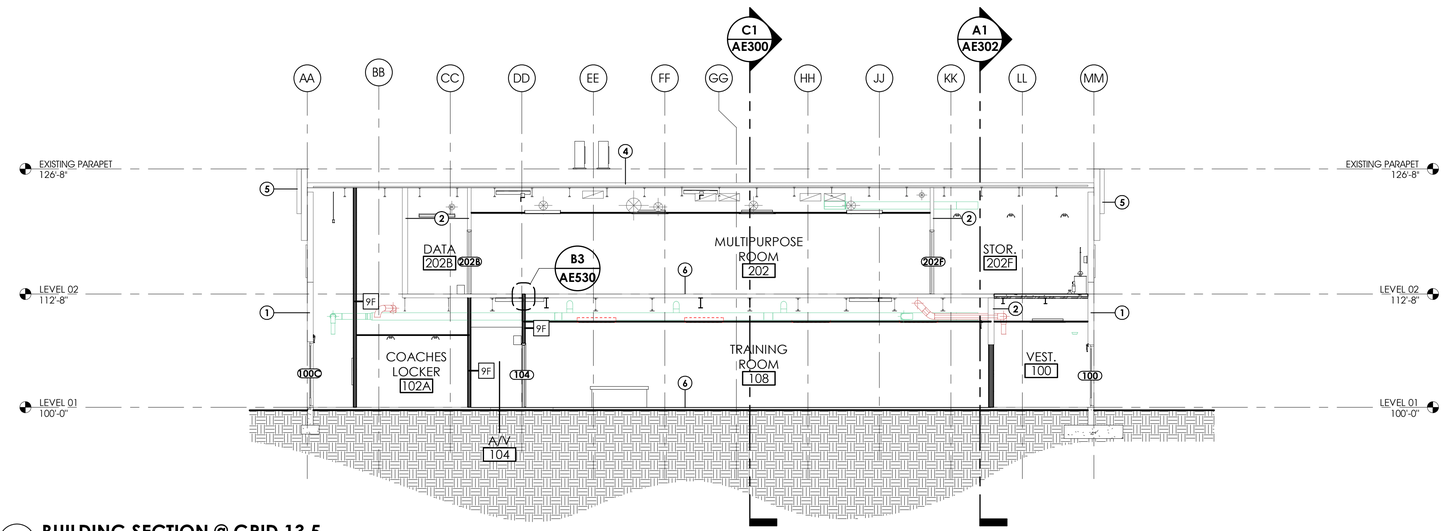

A1 BUILDING SECTION @ GRID 13.5
1/8" = 1'-0"

ARCHITECT 1877

ajc architects

703 east 1700 south
salt lake city, utah 84105
ph: 801.466.8818
fx: 801.466.4411
www.ajcarchitects.com

ARCHITECT / CONSULTANT

STATE OF UTAH
KENT B. RIGBY
No. 135090
05.18.2020
LICENSED ARCHITECT

OWNER INFORMATION

PROJECT DESCRIPTION

DUMKE GYMNASTICS TRAINING CENTER

1825 E. SOUTH CAMPUS DRIVE
SALT LAKE CITY, UT 84112

AHJ STAMP

SHEET NAME:
BUILDING SECTIONS

REVISIONS

MARK	DATE	DESCRIPTION

ISSUE DATA

ISSUE DATE:	10.18.21
ISSUE TYPE:	CD
DRAWN BY:	AT|DG
CHECKED BY:	KR
PROJECT#:	1877

SHEET NUMBER:

AE301

GENERAL NOTES:

- SEE SHEET GI003 FOR GENERAL NOTES LEGENDS AND ABBREVIATIONS.
- SEE GI002 FOR DRAWING INDEX.
- DO NOT SCALE DRAWINGS.
- CONTRACTOR / SUBCONTRACTOR SHALL VERIFY ALL DIMENSIONS AND CONDITIONS BEFORE BEGINNING WORK, AND SHALL REPORT TO THE ARCHITECT ANY ERRORS, INCONSISTENCIES OR OMISSIONS BEFORE BEGINNING WORK. SEE GENERAL NOTES AND SPECIFICATIONS.

KEYED NOTES:

1 EXISTING EXTERIOR WALLS, DOORS, AND WINDOWS TO REMAIN. PROTECT.
2 EXISTING ROOF TO REMAIN. PROTECT. RECOAT.
3 EXISTING INTERIOR WALLS TO REMAIN. PROTECT, REPAINT.
4 EXISTING ATLAS BRICK WALL TO REMAIN. PROTECT.
5 EXISTING CONCRETE BEAM.
6 EXISTING FLOOR TO REMAIN. PROTECT.

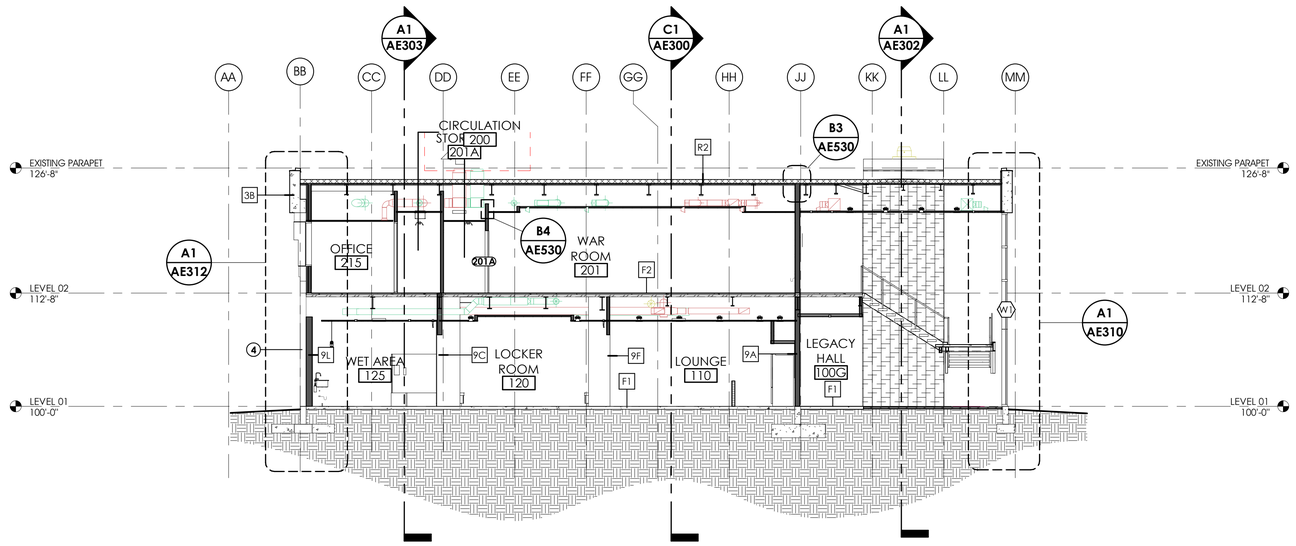

C1 BUILDING SECTION @ GRID 15.5
1/8" = 1'-0"

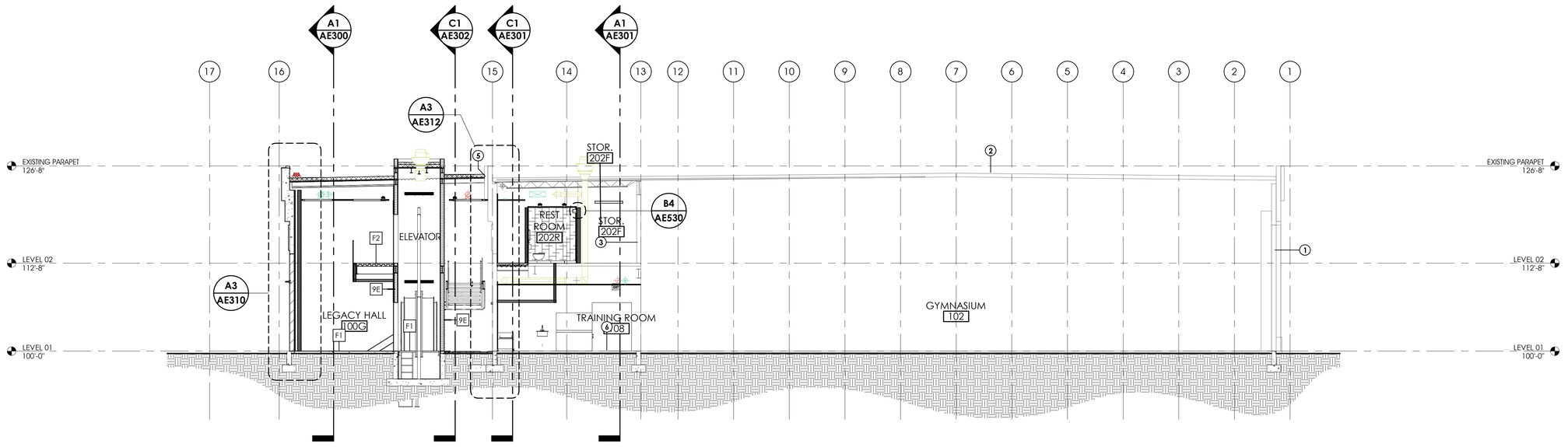

A1 BUILDING SECTION @ GRID KK
1/8" = 1'-0"

ARCHITECT 1877
ajc architects
703 east 1700 south
salt lake city, utah 84105
ph: 801.466.8818
fx: 801.466.4411
www.ajcarchitects.com

ARCHITECT / CONSULTANT

STATE OF UTAH
KENT B. RIGBY
No. 135090
05.18.2020
LICENSED ARCHITECT

OWNER INFORMATION

PROJECT DESCRIPTION

DUMKE GYMNASTICS TRAINING CENTER

1825 E. SOUTH CAMPUS DRIVE
SALT LAKE CITY, UT 84112

AHJ STAMP

SHEET NAME:
BUILDING SECTIONS

REVISIONS

MARK	DATE	DESCRIPTION

ISSUE DATA

ISSUE DATE:	10.18.21
ISSUE TYPE:	CD
DRAWN BY:	AT|DG
CHECKED BY:	KR
PROJECT#:	1877

SHEET NUMBER:
AE302

10/18/2021 4:30:36 PM S:\ajc users\taylor\Revit Local Files\21 0928 - 1877 - Dumke Womens Gymnastics Facility V20_detached_ataylorUV5V2.rvt

ALL IDEAS, DESIGNS, ARRANGEMENTS AND PLANS INDICATED OR REPRESENTED BY THIS DRAWING ARE OWNED BY, AND THE PROPERTY OF AJC ARCHITECTS PC, AND WERE CREATED, EVOLVED, AND DEVELOPED FOR USE ON, AND IN CONNECTION WITH THE SPECIFIED PROJECT. NONE OF THE IDEAS, DESIGNS, ARRANGEMENTS OR PLANS SHALL BE USED BY OR DISCLOSED TO ANY PERSON, FIRM, OR CORPORATION FOR ANY PURPOSE WHATSOEVER WITHOUT WRITTEN CONSENT OF AJC ARCHITECTS PC. WRITTEN DIMENSIONS ON THESE DRAWINGS SHALL HAVE PRECEDENCE OVER SCALE DIMENSIONS. CONTRACTORS SHALL VERIFY AND BE RESPONSIBLE FOR ALL DIMENSIONS AND CONDITIONS ON THE JOB AND THIS OFFICE MUST BE NOTIFIED OF ANY VARIATION FROM THE DIMENSIONS AND CONDITIONS SHOWN BY THESE DRAWINGS. WARNING: REPRODUCTION HEREOF IS A CRIMINAL OFFENSE UNDER 18 U.S.C. SEC. 506. UNAUTHORIZED DISCLOSURE MAY CONSTITUTE TRADE SECRET MISAPPROPRIATION IN VIOLATION OF UC 24.2.31.1 ET. SEQ. AND OTHER LAWS.

GENERAL NOTES:

- SEE SHEET GI003 FOR GENERAL NOTES LEGENDS AND ABBREVIATIONS.
- SEE GI002 FOR DRAWING INDEX.
- DO NOT SCALE DRAWINGS.
- CONTRACTOR / SUBCONTRACTOR SHALL VERIFY ALL DIMENSIONS AND CONDITIONS BEFORE BEGINNING WORK, AND SHALL REPORT TO THE ARCHITECT ANY ERRORS, INCONSISTENCIES OR OMISSIONS BEFORE BEGINNING WORK. SEE GENERAL NOTES AND SPECIFICATIONS.

KEYED NOTES:

1 EXISTING ROOF STRUCTURE & ROOFING SYSTEM OVER THE GYMNASIUM AREA TO REMAIN. PROTECT. RECOAT.
2 EXISTING ATLAS BRICK WALL TO REMAIN. PROTECT.
3 EXISTING INTERIOR WALLS TO REMAIN. PROTECT. REPAINT.
4 EXISTING FLOOR TO REMAIN. PROTECT.
5 EXISTING CONCRETE BEAM.
6 CORE DRILL WALL FOR ROOF DRAIN LINE EXTENSIONS AS NEEDED.

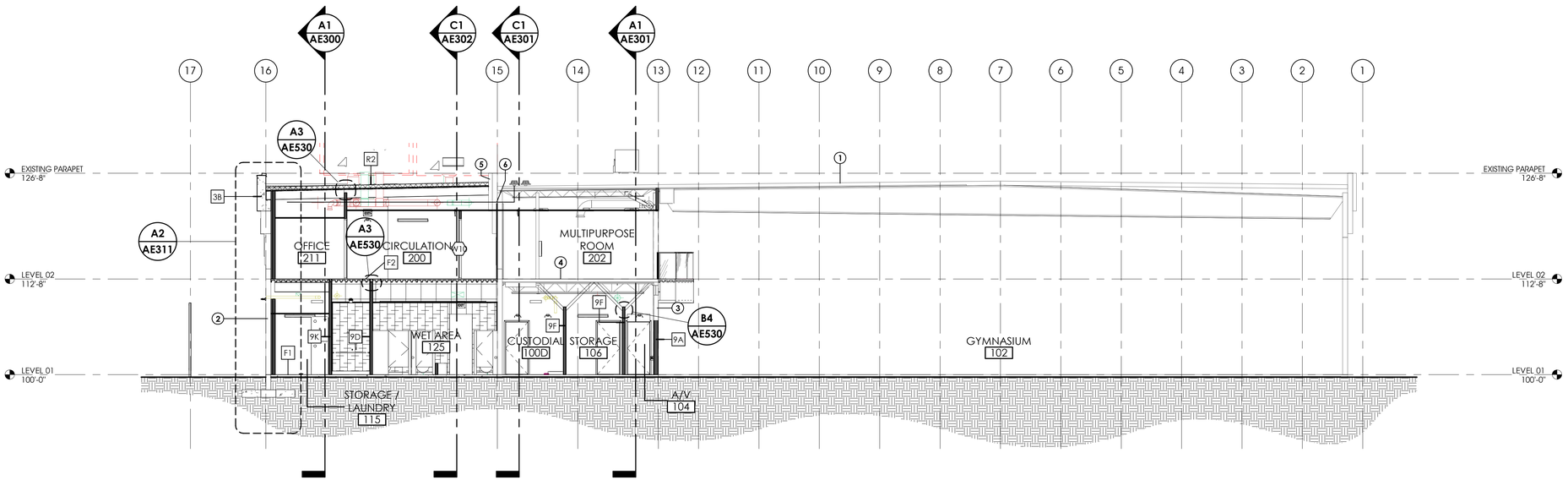

A1 **BUILDING SECTION @ GRID CC**
1/8" = 1'-0"

ARCHITECT 1877

ajc architects

703 east 1700 south
salt lake city, utah 84105
ph: 801.466.8818
fx: 801.466.4411
www.ajcarchitects.com

ARCHITECT / CONSULTANT

STATE OF UTAH
KENT R. RIGBY
No. 135096
05.18.2020
LICENSED ARCHITECT

OWNER INFORMATION

PROJECT DESCRIPTION

DUMKE GYMNASTICS TRAINING CENTER

1825 E. SOUTH CAMPUS DRIVE
SALT LAKE CITY, UT 84112

AHJ STAMP

SHEET NAME:
BUILDING SECTIONS

REVISIONS

MARK	DATE	DESCRIPTION

ISSUE DATA

ISSUE DATE:	10.18.21
ISSUE TYPE:	CD
DRAWN BY:	AT|DG
CHECKED BY:	KR
PROJECT#:	1877

SHEET NUMBER:
AE303

10/18/2021 4:30:39 PM S:\ajc users\ataylor\Revit Local Files\21 0928 - 1877 - Dumke Womens Gymnastics Facility V20_detached_ataylorUV5V2.rvt

10/18/2021 4:30:42 PM S:\ajc users\taylor\Revit Local Files\21 0928 - 1877 - Dumke Womens Gymnastics Facility V20_detached_ataylorUv5V2.rvt

ALL IDEAS, DESIGNS, ARRANGEMENTS AND PLANS INDICATED OR REPRESENTED BY THIS DRAWING ARE OWNED BY AND THE PROPERTY OF AJC ARCHITECTS PC AND WERE CREATED, EVOLVED, AND DEVELOPED FOR USE ON AND IN CONNECTION WITH THE SPECIFIED PROJECT. NONE OF THE IDEAS, DESIGNS, ARRANGEMENTS OR PLANS INDICATED OR REPRESENTED BY THIS DRAWING MAY BE USED BY OR DISCLOSED TO ANY PERSON, FIRM, OR CORPORATION FOR ANY PURPOSE WHATSOEVER WITHOUT WRITTEN CONSENT OF AJC ARCHITECTS PC. WRITTEN DIMENSIONS ON THESE DRAWINGS SHALL HAVE PRECEDENCE OVER SCALE DIMENSIONS. CONTRACTORS SHALL VERIFY AND BE RESPONSIBLE FOR ALL DIMENSIONS AND CONDITIONS ON THE JOB AND THIS OFFICE MUST BE NOTIFIED OF ANY VARIATION FROM THE DIMENSIONS AND CONDITIONS SHOWN BY THESE DRAWINGS. WARNING: REPRODUCTION HEREOF IS A CRIMINAL OFFENSE UNDER 18 U.S.C. 1504, UNAUTHORIZED DISCLOSURE MAY CONSTITUTE TRADE SECRET MISAPPROPRIATION IN VIOLATION OF 17 U.S.C. § 1301-1332 AND OTHER LAWS.

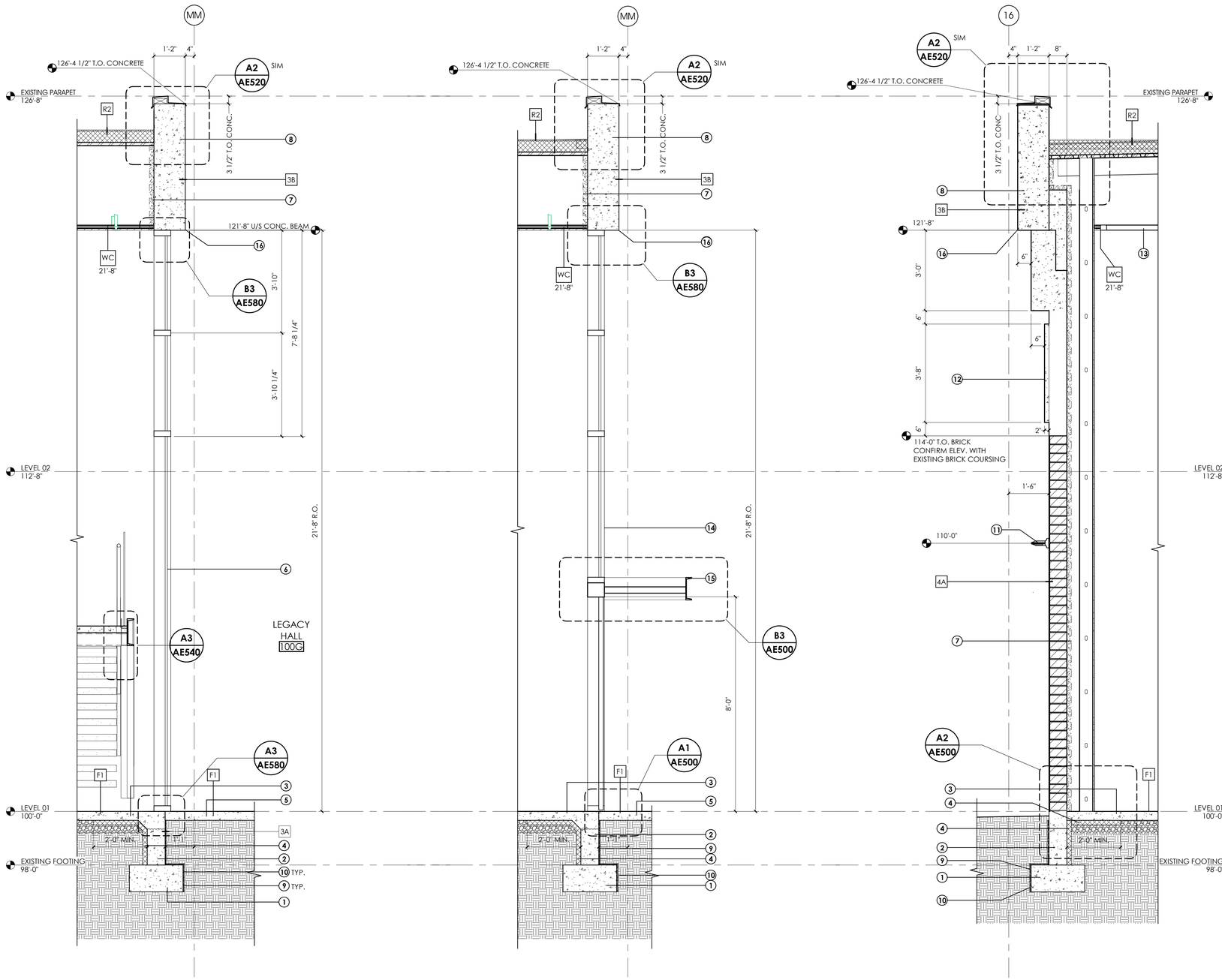

A1 WALL SECTION @ GRID 15.5 / MM
1/2" = 1'-0"

A2 WALL SECTION @ GRID 16 / MM
1/2" = 1'-0"

A3 WALL SECTION @ GRID KK / 16
1/2" = 1'-0"

GENERAL NOTES:

- SEE SHEET GI003 FOR GENERAL NOTES LEGENDS AND ABBREVIATIONS.
- SEE GI002 FOR DRAWING INDEX.
- DO NOT SCALE DRAWINGS.
- CONTRACTOR / SUBCONTRACTOR SHALL VERIFY ALL DIMENSIONS AND CONDITIONS BEFORE BEGINNING WORK, AND SHALL REPORT TO THE ARCHITECT ANY ERRORS, INCONSISTENCIES OR OMISSIONS BEFORE BEGINNING WORK. SEE GENERAL NOTES AND SPECIFICATIONS.

KEYED NOTES:

1	NEW CONCRETE FOOTING, SEE STRUCTURAL DRAWINGS.
2	CONCRETE FOUNDATION WALL, SEE STRUCTURAL DRAWINGS.
3	NEW 4" CAST-IN-PLACE CONCRETE SLAB, SEE STRUCTURAL DRAWINGS.
4	2" CONTINUOUS XPS INSULATION BOARD (R-10) ADHERED.
5	NEW CONCRETE PAVING, SEE CIVIL DRAWINGS.
6	THERMALLY BROKEN ALUMINUM CURTAIN WALL SYSTEM, SEE WINDOW TYPES.
7	2" CLOSED-CELL SPRAY FOAM INSULATION. SEE SPECIFICATIONS. (R-13.5.)
8	NEW CAST-IN-PLACE CONCRETE BEAM; SEE STRUCTURAL DRAWINGS
9	CONTINUOUS EXTERIOR DAMPPROOFING BELOW GRADE, TYP.
10	PROTECTION/DRAINAGE COURSE, SEE SPECIFICATIONS.
11	EXTERIOR LIGHTING, SEE ELECTRICAL DRAWINGS.
12	CAST-IN-PLACE CONCRETE BEAM WITH BOARD FORM FINISH; SEE STRUCTURAL DRAWINGS, MATCH EXISTING.
13	INTERIOR LIGHTING, SEE ELECTRICAL DRAWINGS.
14	STEEL REINFORCED CURTAIN WALL MULLION
15	STEEL CANOPY, PAINTED. ANCHORED TO REINFORCED CURTAIN WALL MULLIONS
16	3/4" CHAMFER, TYP.

ARCHITECT 1877

ajc architects

703 east 1700 south
salt lake city, utah 84105
ph: 801.466.8818
fx: 801.466.4411
www.ajcarchitects.com

ARCHITECT / CONSULTANT

STATE OF UTAH
KENT B. RIGBY
No. 135090
05.18.2020
LICENSED ARCHITECT

OWNER INFORMATION

PROJECT DESCRIPTION

DUMKE GYMNASTICS TRAINING CENTER

1825 E. SOUTH CAMPUS DRIVE
SALT LAKE CITY, UT 84112

AHJ STAMP

SHEET NAME:
WALL SECTIONS

REVISIONS

MARK	DATE	DESCRIPTION

ISSUE DATA

ISSUE DATE:	10.18.21
ISSUE TYPE:	CD
DRAWN BY:	AT|DG
CHECKED BY:	KR
PROJECT#:	1877

SHEET NUMBER:

AE310

10/18/2021 4:30:48 PM S:\ajc users\taylor\Revit Local Files\21 0928 - 1877 - Dumke Womens Gymnastics Facility V20_detached_ataylorUV5V2.rvt

ALL IDEAS, DESIGNS, ARRANGEMENTS AND PLANS INDICATED OR REPRESENTED BY THIS DRAWING ARE OWNED BY AND THE PROPERTY OF AJC ARCHITECTS PC AND WERE CREATED, EVOLVED, AND DEVELOPED FOR USE ON AND IN CONNECTION WITH THE SPECIFIED PROJECT. NONE OF THE IDEAS, DESIGNS, ARRANGEMENTS OR PLANS INDICATED IN OR REPRESENTED BY THIS DRAWING, IN WHOLE OR IN PART, SHALL BE USED BY OR DISCLOSED TO ANY PERSON, FIRM, OR CORPORATION FOR ANY PURPOSE WHATSOEVER WITHOUT WRITTEN CONSENT OF AJC ARCHITECTS PC. WRITTEN DIMENSIONS ON THESE DRAWINGS SHALL HAVE PRECEDENCE OVER SCALE DIMENSIONS. CONTRACTORS SHALL VERIFY AND BE RESPONSIBLE FOR ALL DIMENSIONS AND CONDITIONS ON THE JOB AND THIS OFFICE MUST BE NOTIFIED OF ANY VARIATION FROM THE DIMENSIONS AND CONDITIONS SHOWN BY THESE DRAWINGS. WARNING: REPRODUCTION HEREOF IS A CRIMINAL OFFENSE UNDER 18 U.S.C. 506. UNAUTHORIZED DISCLOSURE MAY CONSTITUTE TRADE SECRET MISAPPROPRIATION IN VIOLATION OF 12.24.2.311.1 ET. SEQ. AND OTHER LAWS.

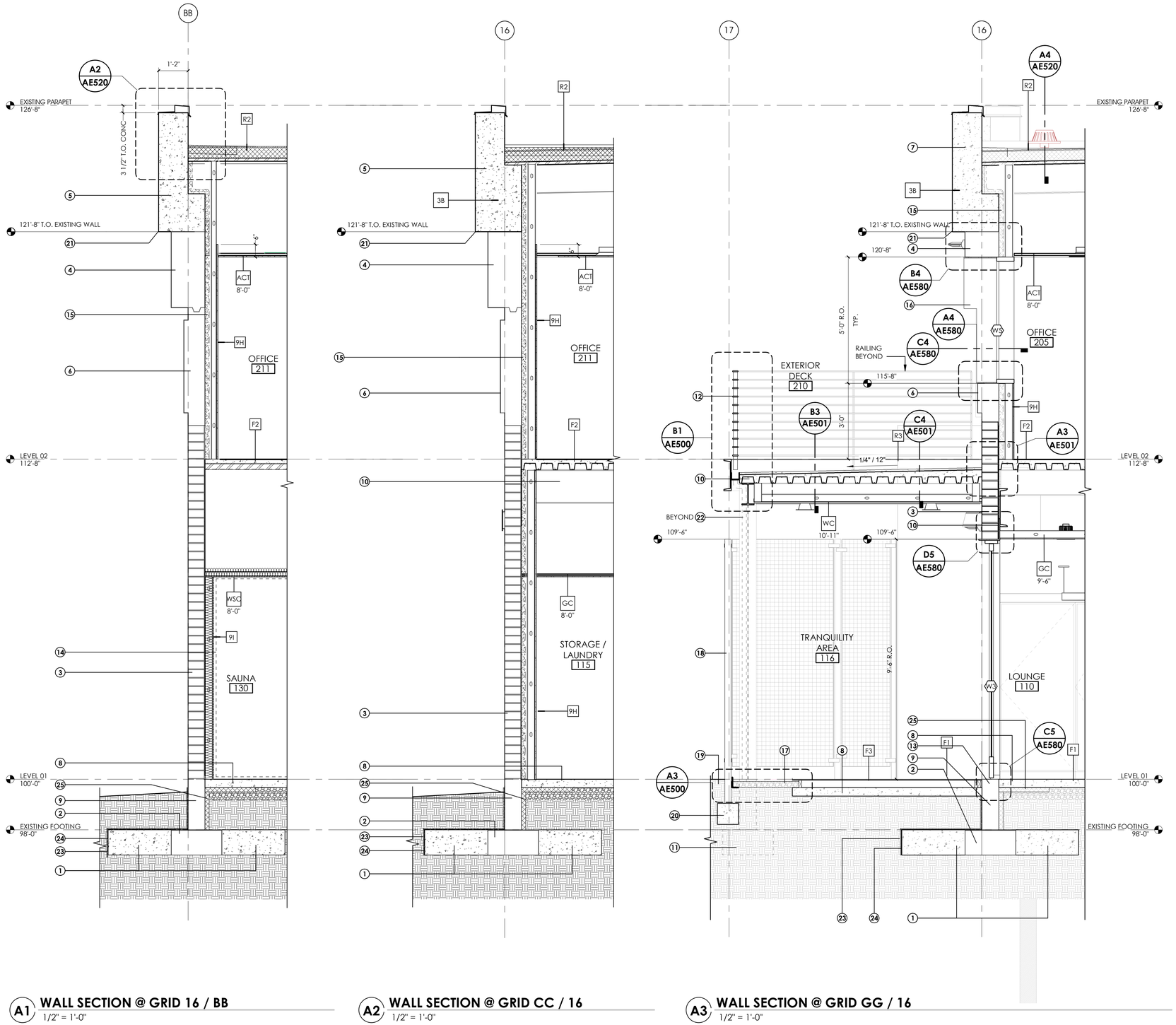

A1 WALL SECTION @ GRID 16 / BB
1/2" = 1'-0"

A2 WALL SECTION @ GRID CC / 16
1/2" = 1'-0"

A3 WALL SECTION @ GRID GG / 16
1/2" = 1'-0"

GENERAL NOTES:

- SEE SHEET GI003 FOR GENERAL NOTES LEGENDS AND ABBREVIATIONS.
- SEE GI002 FOR DRAWING INDEX.
- DO NOT SCALE DRAWINGS.
- CONTRACTOR / SUBCONTRACTOR SHALL VERIFY ALL DIMENSIONS AND CONDITIONS BEFORE BEGINNING WORK, AND SHALL REPORT TO THE ARCHITECT ANY ERRORS, INCONSISTENCIES OR OMISSIONS BEFORE BEGINNING WORK. SEE GENERAL NOTES AND SPECIFICATIONS.

KEYED NOTES:

1	NEW CONCRETE FOOTING. SEE STRUCTURAL DRAWINGS.
2	EXISTING CONCRETE FOOTING. SEE STRUCTURAL DRAWINGS.
3	EXISTING ATLAS BRICK WALL TO REMAIN. PROTECT.
4	EXISTING CONCRETE BEAM.
5	NEW CAST-IN-PLACE CONCRETE BEAM: SEE STRUCTURAL DRAWINGS
6	EXISTING CONCRETE BEAM; BOARD FORMED FINISH
7	CONCRETE BEAM. SEE STRUCTURAL DRAWINGS.
8	NEW 4" CAST-IN-PLACE CONCRETE SLAB. SEE STRUCTURAL DRAWINGS.
9	EXISTING CONCRETE FOUNDATION WALL. SEE STRUCTURAL DRAWINGS.
10	STRUCTURAL STEEL FRAMING. SEE STRUCTURAL DRAWINGS.
11	NEW CONCRETE FOOTING BEYOND. SEE STRUCTURAL DRAWINGS.
12	STEEL GUARDRAIL. PAINTED
13	REMOVE TOP 4" OF EXISTING FOUNDATION FOR NEW SLAB TO POUR OVER @ OPENINGS.
14	PRE-MANUFACTURED SAUNA. ADD ALT #4.
15	2" CLOSED-CELL SPRAY FOAM INSULATION. SEE SPECIFICATIONS. (R-13.5.)
16	METAL WINDOW SHROUD; PTD TO MATCH MULLION FINISH
17	WHITE PEA GRAVEL
18	MODULAR WELDED WIRE PLANT SUPPORT SYSTEM. SEE SPECIFICATIONS.
19	FINISH GRADE. SEE CIVIL DRAWINGS.
20	PLANT SUPPORT SYSTEM PIER; AS PER MNF REQMTS
21	3/4" CHAMFER. TYP.
22	RAIN WATER LEADER
23	PROTECTION/DRAINAGE COURSE. SEE SPECIFICATIONS.
24	CONTINUOUS EXTERIOR DAMPPROOFING BELOW GRADE. TYP.
25	2" CONTINUOUS XPS INSULATION BOARD (R-10) ADHERED.

ARCHITECT 1877

ajc architects

703 east 1700 south
salt lake city, utah 84105
ph: 801.466.8818
fx: 801.466.4411
www.ajcarchitects.com

ARCHITECT / CONSULTANT

STATE OF UTAH
KENT B. RIGBY
No. 135090
05.18.2020
LICENSED ARCHITECT

OWNER INFORMATION

PROJECT DESCRIPTION

DUMKE GYMNASTICS TRAINING CENTER

1825 E. SOUTH CAMPUS DRIVE
SALT LAKE CITY, UT 84112

AHJ STAMP

SHEET NAME:
WALL SECTIONS

REVISIONS

MARK	DATE	DESCRIPTION

ISSUE DATA

ISSUE DATE:	10.18.21
ISSUE TYPE:	CD
DRAWN BY:	AT|DG
CHECKED BY:	KR
PROJECT#:	1877

SHEET NUMBER:

AE311

10/18/2021 4:30:52 PM S:\ajc users\taylor\Revit Local Files\21 0928 - 1877 - Dumke Womens Gymnastics Facility V20_detached_taylorUV5V2.rvt

ALL IDEAS, DESIGNS, ARRANGEMENTS AND PLANS INDICATED OR REPRESENTED BY THIS DRAWING ARE OWNED BY AND THE PROPERTY OF AJC ARCHITECTS PC AND WERE CREATED, EVOLVED, AND DEVELOPED FOR USE ON AND IN CONNECTION WITH THE SPECIFIED PROJECT. NONE OF THE IDEAS, DESIGNS, ARRANGEMENTS OR PLANS INDICATED IN OR REPRESENTED BY THIS DRAWING MAY BE USED BY OR DISCLOSED TO ANY PERSON, FIRM, OR CORPORATION FOR ANY PURPOSE WHATSOEVER WITHOUT WRITTEN CONSENT OF AJC ARCHITECTS PC. WRITTEN DIMENSIONS ON THESE DRAWINGS SHALL HAVE PRECEDENCE OVER SCALE DIMENSIONS. CONTRACTORS SHALL VERIFY AND BE RESPONSIBLE FOR ALL DIMENSIONS AND CONDITIONS ON THE JOB AND THE OFFICE MUST BE NOTIFIED OF ANY VARIATION FROM THE DIMENSIONS AND CONDITIONS SHOWN BY THESE DRAWINGS. WARNING: REPRODUCTION HEREOF IS A CRIMINAL OFFENSE UNDER 18 U.S.C. 506. UNAUTHORIZED DISCLOSURE MAY CONSTITUTE TRADE SECRET MISAPPROPRIATION IN VIOLATION OF 17 U.S.C. § 1 ET. SEQ. AND OTHER LAWS.

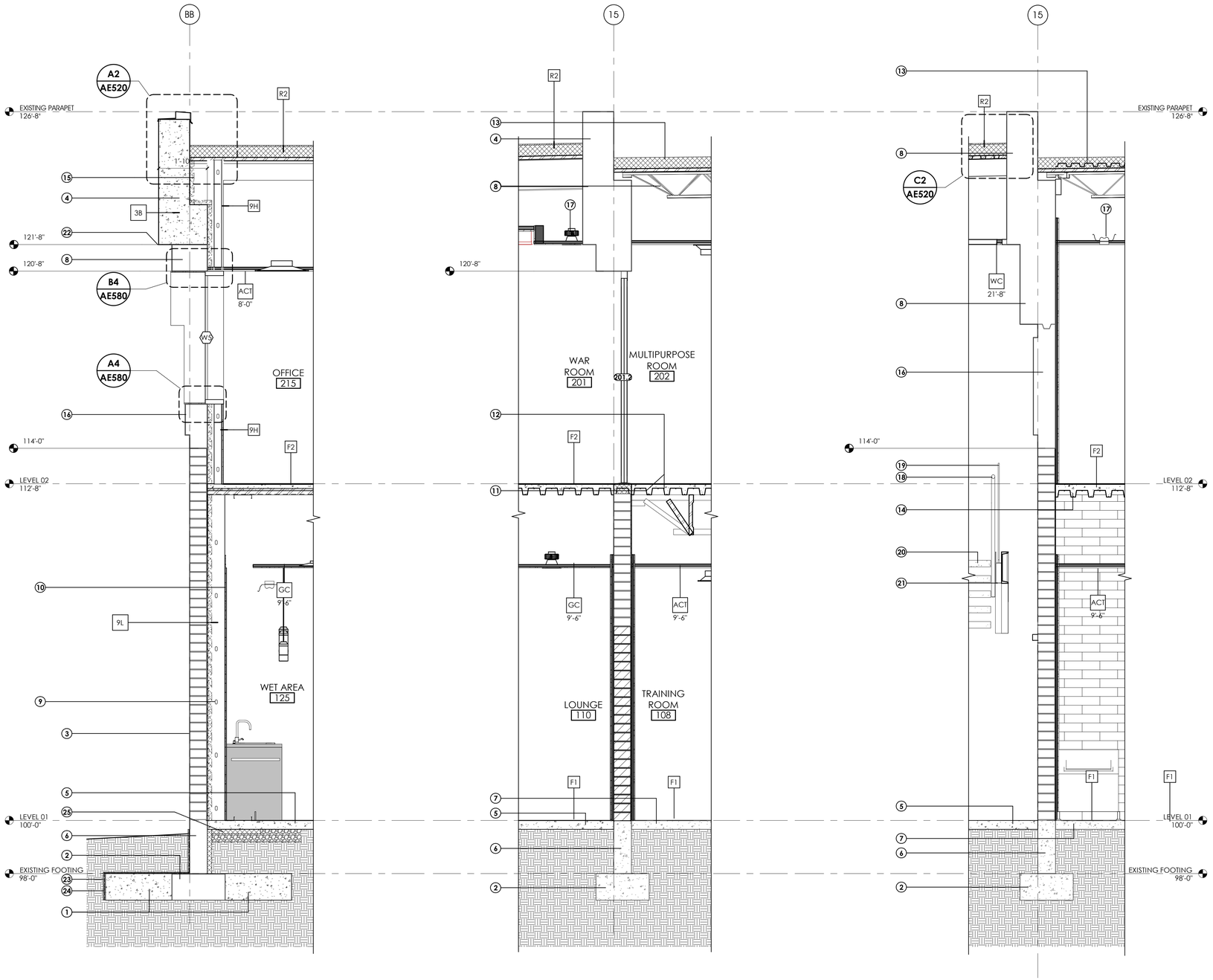

A1 WALL SECTION @ GRID 15.5 / BB
1/2" = 1'-0"

A2 WALL SECTION @ GRID GG / 15
1/2" = 1'-0"

A3 WALL SECTION @ GRID KK / 15
1/2" = 1'-0"

GENERAL NOTES:

- SEE SHEET GI003 FOR GENERAL NOTES LEGENDS AND ABBREVIATIONS.
- SEE GI002 FOR DRAWING INDEX.
- DO NOT SCALE DRAWINGS.
- CONTRACTOR / SUBCONTRACTOR SHALL VERIFY ALL DIMENSIONS AND CONDITIONS BEFORE BEGINNING WORK, AND SHALL REPORT TO THE ARCHITECT ANY ERRORS, INCONSISTENCIES OR OMISSIONS BEFORE BEGINNING WORK. SEE GENERAL NOTES AND SPECIFICATIONS.

KEYED NOTES:

1	NEW CONCRETE FOOTING. SEE STRUCTURAL DRAWINGS.
2	EXISTING CONCRETE FOOTING. SEE STRUCTURAL DRAWINGS.
3	EXISTING ATLAS BRICK WALL TO REMAIN. PROTECT.
4	NEW CAST-IN-PLACE CONCRETE BEAM; SEE STRUCTURAL DRAWINGS
5	NEW 4" CAST-IN-PLACE CONCRETE SLAB. SEE STRUCTURAL DRAWINGS.
6	EXISTING CONCRETE FOUNDATION WALL, SEE STRUCTURAL DRAWINGS.
7	EXISTING 4" CAST-IN-PLACE CONCRETE SLAB. SEE STRUCTURAL DRAWINGS.
8	EXISTING CONCRETE BEAM.
9	8" X 20 GA. MTL STUD @ 16" O.C.
10	CERAMIC TILE. SEE FINISH LEGEND.
11	STEEL JOIST, SEE STRUCTURAL DRAWINGS.
12	EXISTING FLOOR TO REMAIN. PROTECT.
13	EXISTING ROOF STRUCTURE AND ROOFING SYSTEM OVER THE NEW MULTIPURPOSE ROOM TO REMAIN. PROTECT. RECOAT.
14	CAST-IN-PLACE CONCRETE SLAB W/ METAL DECKING, SEE STRUCTURAL DRAWINGS.
15	2" CLOSED-CELL SPRAY FOAM INSULATION. SEE SPECIFICATIONS. (R-13.5.)
16	EXISTING CONCRETE BEAM; BOARD FORMED FINISH
17	INTERIOR LIGHTING, SEE ELECTRICAL DRAWINGS.
18	STEEL TUBE GUARDRAIL.
19	1/2" LAMINATED, FULLY TEMPERED, LOW IRON GLASS GUARDRAIL, FLAT POLISHED EDGES. PANELS SHALL BE IN ACCORDANCE WITH ASTM E2353.
20	PRECAST CONCRETE STAIR TREAD, SEE SPECS.
21	12" STEEL CHANNEL BROKENBACK STRINGER. SEE STRUCTURAL DRAWINGS. PAINT.
22	3/4" CHAMFER, TYP.
23	PROTECTION/DRAINAGE COURSE, SEE SPECIFICATIONS.
24	CONTINUOUS EXTERIOR DAMPPROOFING BELOW GRADE, TYP.
25	2" CONTINUOUS XPS INSULATION BOARD (R-10) ADHERED.

ARCHITECT 1877

ajc architects

703 east 1700 south
salt lake city, utah 84105
ph: 801.466.8818
fx: 801.466.4411
www.ajcarchitects.com

ARCHITECT / CONSULTANT

STATE OF UTAH
KENT R. RIGBY
No. 135090
05.18.2020
LICENSED ARCHITECT

OWNER INFORMATION

PROJECT DESCRIPTION

DUMKE GYMNASTICS TRAINING CENTER

1825 E. SOUTH CAMPUS DRIVE
SALT LAKE CITY, UT 84112

AHJ STAMP

SHEET NAME:
WALL SECTIONS

REVISIONS

MARK	DATE	DESCRIPTION

ISSUE DATA

ISSUE DATE:	10.18.21
ISSUE TYPE:	CD
DRAWN BY:	AT|DG
CHECKED BY:	KR
PROJECT#:	1877

SHEET NUMBER:
AE312

10/18/2021 4:30:58 PM S:\ajc users\taylor\Revit Local Files\21 0928 - 1877 - Dumke Womens Gymnastics Facility V20_detached_taylorUv5V2.rvt

ALL IDEAS, DESIGNS, ARRANGEMENTS, AND PLANS INDICATED OR REPRESENTED BY THIS DRAWING ARE OWNED BY, AND THE PROPERTY OF, AJC ARCHITECTS PC, AND WERE CREATED, EVOLVED, AND DEVELOPED FOR USE ON, AND IN CONNECTION WITH, THE SPECIFIED PROJECT. NONE OF THE IDEAS, DESIGNS, ARRANGEMENTS OR PLANS INDICATED OR REPRESENTED BY THIS DRAWING MAY BE USED BY, OR DISCLOSED TO, ANY PERSON, FIRM, OR CORPORATION FOR ANY PURPOSE WHATSOEVER WITHOUT WRITTEN CONSENT OF AJC ARCHITECTS PC. WRITTEN DIMENSIONS ON THESE DRAWINGS SHALL HAVE PRECEDENCE OVER SCALE DIMENSIONS. CONTRACTORS SHALL VERIFY AND BE RESPONSIBLE FOR ALL DIMENSIONS AND CONDITIONS ON THE JOB AND THIS OFFICE MUST BE NOTIFIED OF ANY VARIATION FROM THE DIMENSIONS AND CONDITIONS SHOWN BY THESE DRAWINGS. WARNING: REPRODUCTION HEREOF IS A CRIMINAL OFFENSE UNDER 18 U.S.C. 506; UNAUTHORIZED DISCLOSURE MAY CONSTITUTE TRADE SECRET MISAPPROPRIATION IN VIOLATION OF 17 U.S.C. § 1301 ET. SEQ. AND OTHER LAWS.

GENERAL NOTES:

- SEE SHEET GI003 FOR GENERAL NOTES LEGENDS AND ABBREVIATIONS.
- SEE GI002 FOR DRAWING INDEX.
- DO NOT SCALE DRAWINGS.
- CONTRACTOR / SUBCONTRACTOR SHALL VERIFY ALL DIMENSIONS AND CONDITIONS BEFORE BEGINNING WORK, AND SHALL REPORT TO THE ARCHITECT ANY ERRORS, INCONSISTENCIES OR OMISSIONS BEFORE BEGINNING WORK. SEE GENERAL NOTES AND SPECIFICATIONS.

KEYED NOTES:

1	EXISTING ATLAS BRICK WALL TO REMAIN. PROTECT.
2	12" STEEL CHANNEL BROKENBACK STRINGER. SEE STRUCTURAL DRAWINGS. PAINT.
3	PRECAST CONCRETE STAIR TREAD. SEE SPECS.
4	ALIGN GLASS JOINTS W/ HANDRAIL POSTS
5	1-1/2" DIA. STEEL PIPE HANDRAIL @ 36" ABOVE ADJACENT SURFACE. RETURN TO FLOOR/WALL AS INIDICATED. PTD.
6	1/2" LAMINATED, FULLY TEMPERED, LOW IRON GLASS GUARDRAIL, FLAT POLISHED EDGES. PANELS SHALL BE IN ACCORDANCE WITH ASTM E2353.
7	THERMALLY BROKEN ALUMINUM CURTAIN WALL SYSTEM, SEE WINDOW TYPES.
8	RETURN HANDRAIL TO FLOOR
9	WELDED BROKEN BACK STRINGER FOR STAIRS & LANDINGS FLOOR TO FLOOR
10	PIT LADDER BY G.C.; SEE SPECIFICATIONS. CONTRACTOR TO COORDINATE ANY IN WALL BLOCKING REQ'D FOR PROPER INSTALLATION/MOUNTING.
11	24" X 24" X 24" ELEVATOR SUMP PIT. SEE STRUCTURAL DRAWINGS
12	ELEVATOR CALL STATION LOCATION.
13	1-HR RATED ASSEMBLY. UL LISTING U497.

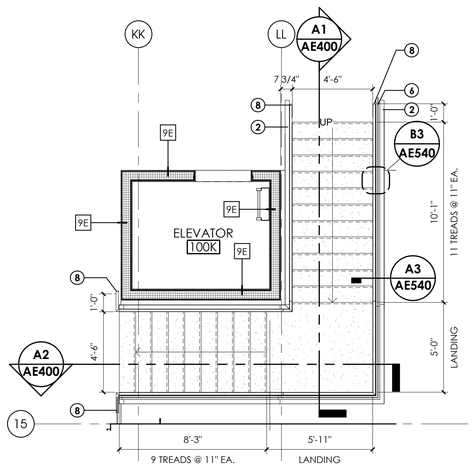

C1 PARTIAL PLAN - MAIN STAIR
1/4" = 1'-0"

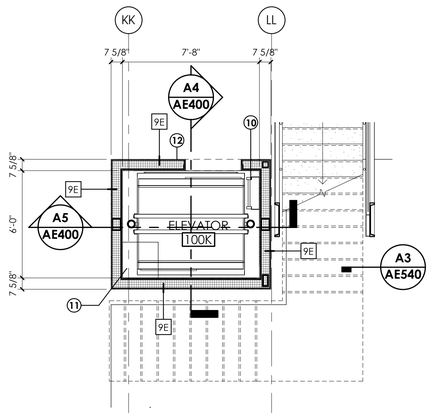

C2 PARTIAL PLAN - ELEVATOR LEVEL 01
1/4" = 1'-0"

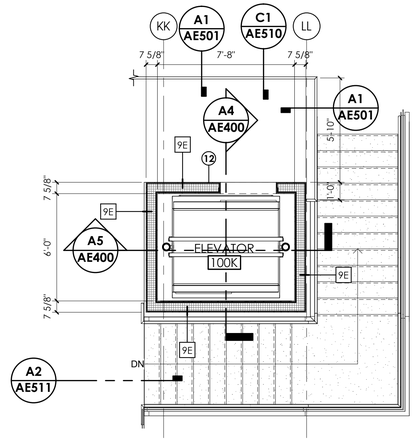

C4 PARTIAL PLAN - ELEVATOR LEVEL 02
1/4" = 1'-0"

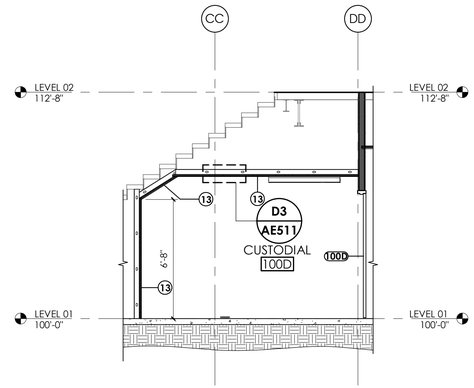

C5 EXISTING STAIR SECTION 1
1/4" = 1'-0"

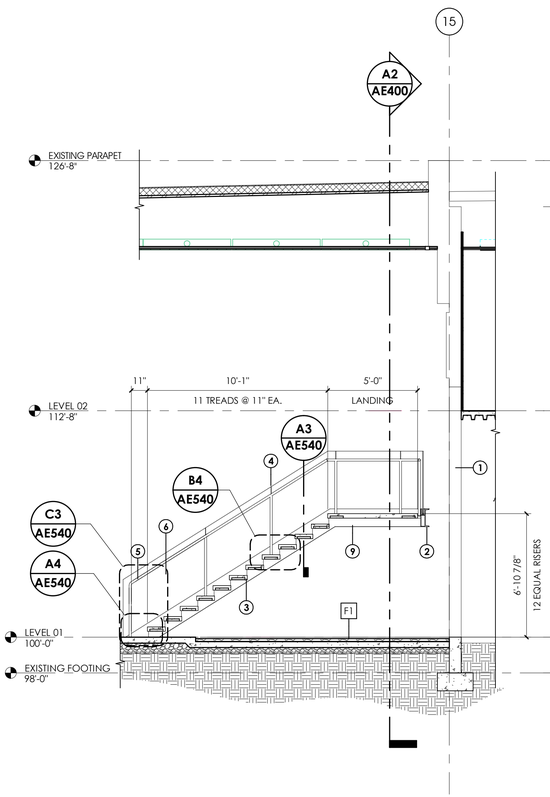

A1 STAIR SECTION 1
1/4" = 1'-0"

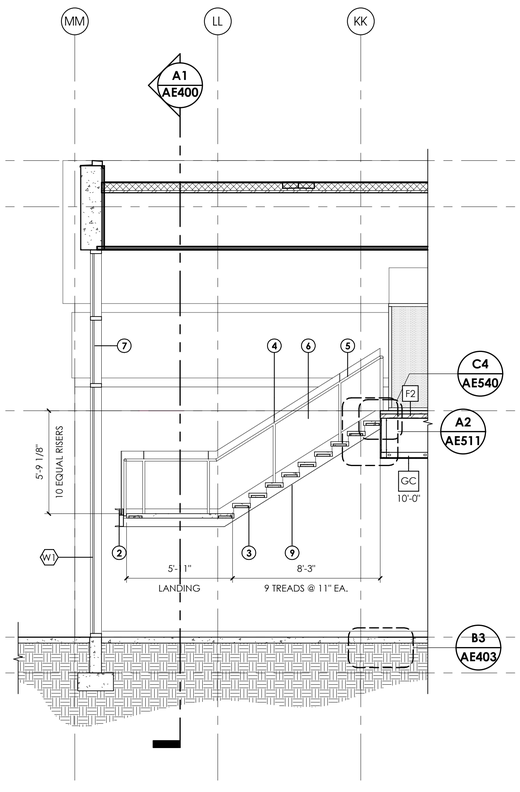

A2 STAIR SECTION 2
1/4" = 1'-0"

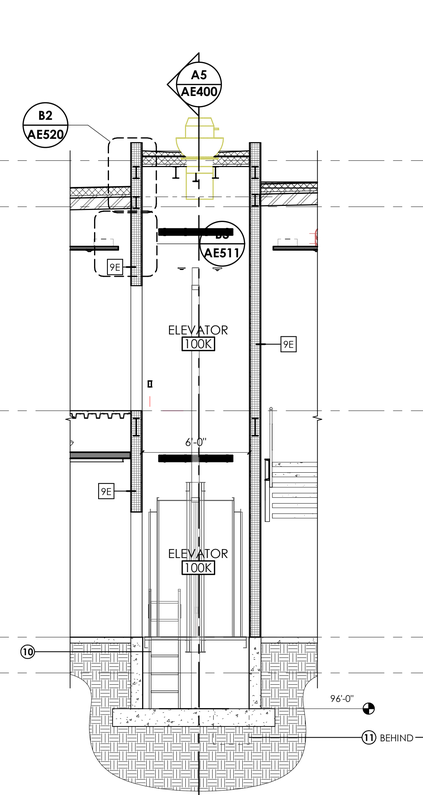

A4 ELEVATOR SECTION 1
1/4" = 1'-0"

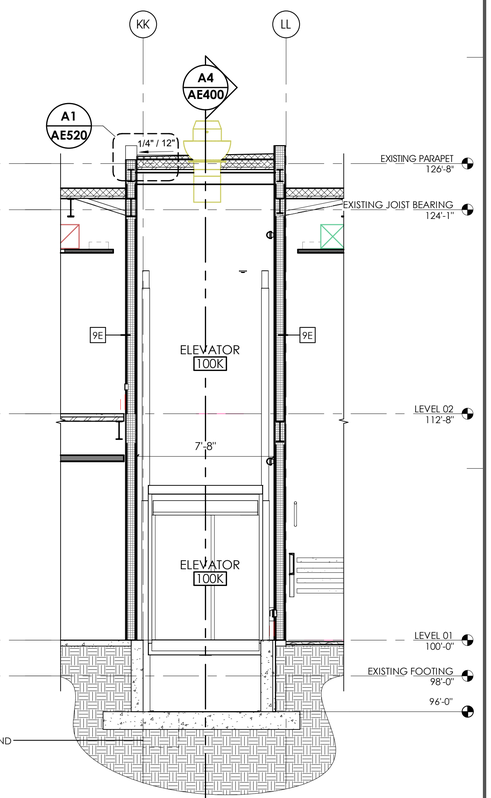

A5 ELEVATOR SECTION 2
1/4" = 1'-0"

ARCHITECT 1877

ajc architects

703 east 1700 south
salt lake city, utah 84105
ph: 801.466.8818
fx: 801.466.4411
www.ajcarchitects.com

ARCHITECT / CONSULTANT

STATE OF UTAH
KENT B. RIGBY
No. 135090
05.18.2020
LICENSED ARCHITECT

OWNER INFORMATION

PROJECT DESCRIPTION

DUMKE GYMNASTICS TRAINING CENTER

1825 E. SOUTH CAMPUS DRIVE
SALT LAKE CITY, UT 84112

AHJ STAMP

SHEET NAME:
ENLARGED VERTICAL CIRCULATION

REVISIONS

MARK	DATE	DESCRIPTION

ISSUE DATA

ISSUE DATE:	10.18.21
ISSUE TYPE:	CD
DRAWN BY:	AT|DG
CHECKED BY:	KR
PROJECT#:	1877

SHEET NUMBER:

AE400

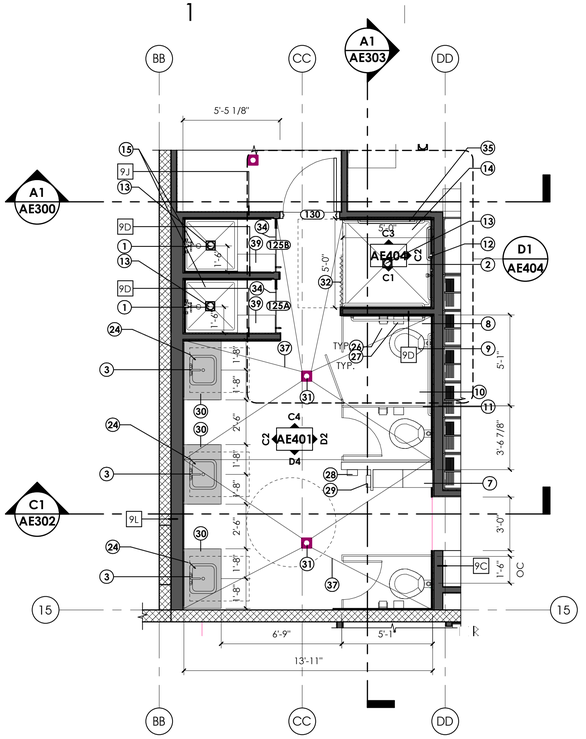

C1 PARTIAL PLAN - RM 125
1/4" = 1'-0"

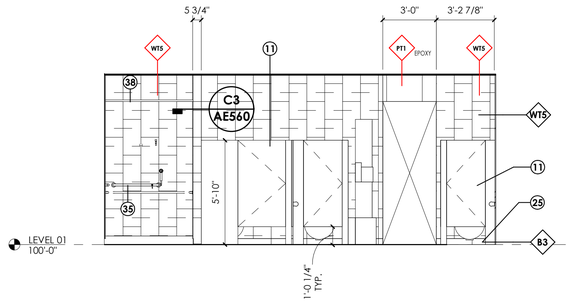

D2 INT. ELEV. - RM 125 NORTH
1/4" = 1'-0"

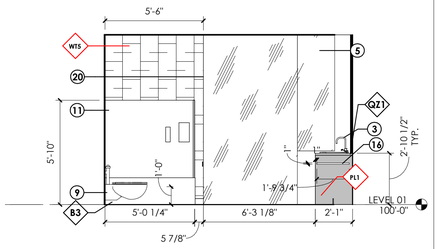

D4 INT. ELEV. - RM 125 EAST
1/4" = 1'-0"

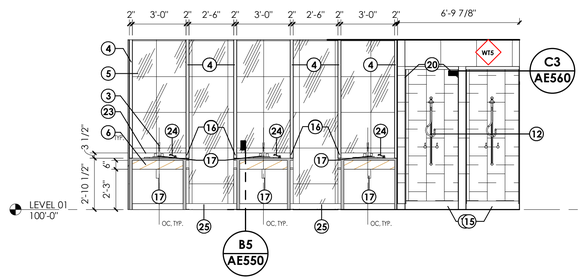

C2 INT. ELEV. - RM 125 SOUTH
1/4" = 1'-0"

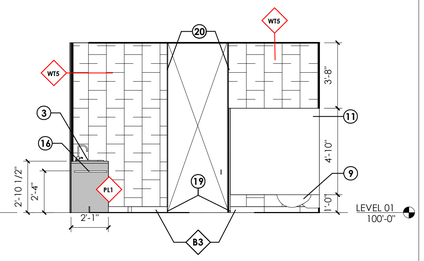

C4 INT. ELEV. - RM 125 WEST
1/4" = 1'-0"

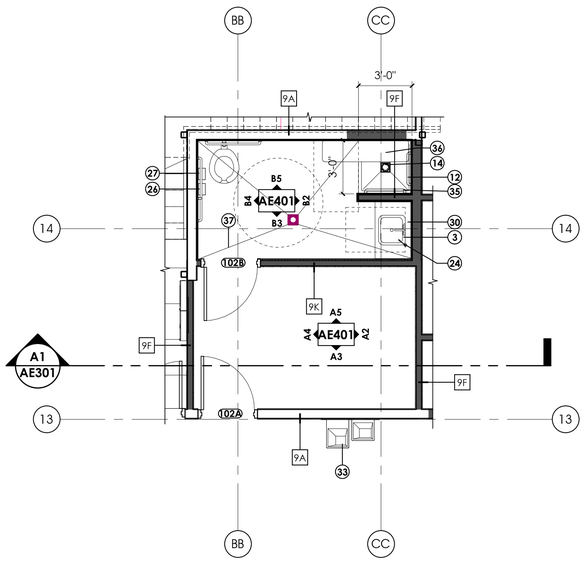

A1 PARTIAL PLAN - RM 112 / RM 113
1/4" = 1'-0"

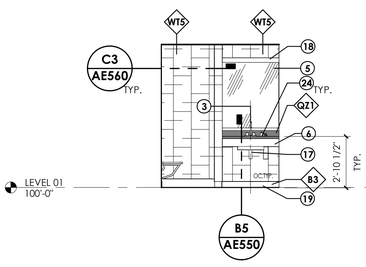

B2 INT. ELEV. - RM 102B NORTH
1/4" = 1'-0"

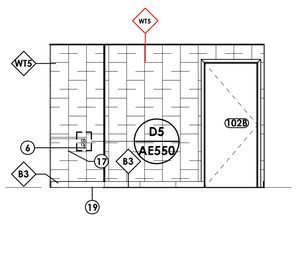

B3 INT. ELEV. - RM 102B EAST
1/4" = 1'-0"

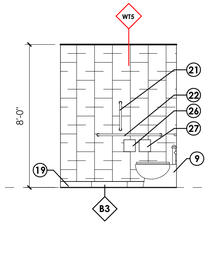

B4 INT. ELEV. - RM 102B SOUTH
1/4" = 1'-0"

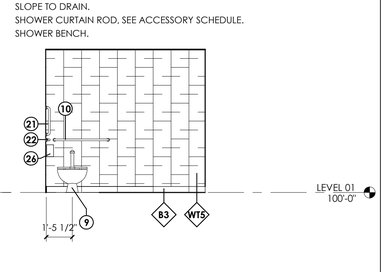

B5 INT. ELEV. - RM 102B WEST
1/4" = 1'-0"

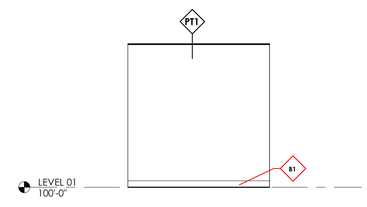

A2 INT. ELEV. - RM 102A NORTH
1/4" = 1'-0"

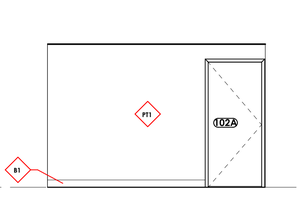

A3 INT. ELEV. - RM 102A EAST
1/4" = 1'-0"

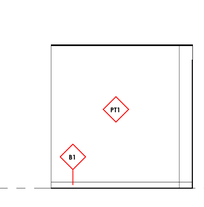

A4 INT. ELEV. - RM 102A SOUTH
1/4" = 1'-0"

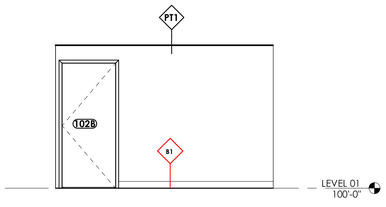

A5 INT. ELEV. - RM 102A WEST
1/4" = 1'-0"

GENERAL NOTES:

- SEE SHEET GI003 FOR GENERAL NOTES LEGENDS AND ABBREVIATIONS.
- SEE GI002 FOR DRAWING INDEX.
- DO NOT SCALE DRAWINGS.
- CONTRACTOR / SUBCONTRACTOR SHALL VERIFY ALL DIMENSIONS AND CONDITIONS BEFORE BEGINNING WORK, AND SHALL REPORT TO THE ARCHITECT ANY ERRORS, INCONSISTENCIES OR OMISSIONS BEFORE BEGINNING WORK. SEE GENERAL NOTES AND SPECIFICATIONS.
- SEE FINISH LEGEND, SHEET AE620.

KEYED NOTES:

1	SHOWER
2	ADA ROLL IN SHOWER.
3	SINK AND FAUCET, SEE PLUMBING DRAWINGS.
4	ELECTRICAL LIGHT FIXTURE, SEE ELECTRICAL DRAWINGS.
5	FIELD VERIFY CONDITIONS FOR MIRROR LOCATIONS. ALL MIRROR TO BE CENTERED ON PLUMBING FIXTURE.COORDINATE MIRROR SIZES WITH ELECTRICAL LIGHT FIXTURE LOCATIONS AND SIZES.COORDINATION REQUIRED WITH ELECTRICAL.
6	P-LAM FINISH ON APRON.
7	TALL CABINETS. SEE MILLWORK DETAILS.
8	GRAB BAR
9	ADA TOILET, SEE PLUMBING DRAWINGS
10	42" S.S. GRAB BAR.
11	SOLID SURFACE PARTITIONS. SEE FINISH LEGEND AND SPECS.
12	ADA SHOWER CONTROLS TO BE WITHIN 18" OF FOLDING SHOWER SEAT. SEE PLUMBING DRAWINGS.
13	FLOOR DRAIN. SLOPE FLOOR TO DRAIN AT 1/4" PER FT. SEE PLUMBING DWG'S.
14	ADA PRE FAB SHOWER BASE.SEE PLUMBING DRAWINGS.
15	PRE FAB SHOWER BASE.SEE PLUMBING DRAWINGS.
16	CUSTOM METAL BAR. SEE MILLWORK DETAILS.
17	ADA PIPE WRAP ON ALL EXPOSED PIPES.
18	VANITY LIGHT, SEE EXLECTRICAL DRAWINGS.
19	SCHLUTER COVE TRIM. SEE SPECIFICATIONS.
20	SCHLUTER FINEC WALL TRIM.SEE SPECIFICATIONS.
21	18" VERTICAL S.S. GRAB BAR. SEE ACCESSORY SCHEDULE.
22	36" S.S. GRAB BAR.
23	4" BACKSPLASH.
24	SOAP DISPENSER, SEE ACCESSORY SCHEDULE.
25	4" TILE BASE WITH SCHLUTER COVE TRIM. SEE FINISH LEGEND.
26	TOILET TISSUE DISPENSER, SEE ACCESSORY SCHEDULE.
27	SANITARY NAPKIN DISPENSER, SEE ACCESSORY SCHEDULE.
28	HAND DRYER, SEE ELECTRICAL DRAWINGS.
29	TOWEL DISPENSER/WASTE RECEPTACLE, SEE ACCESSORY SCHEDULE.
30	QUARTZ COUNTERTOP.SEE FINISH LEGEND.
31	FLOOR DRAIN. SEE MECHANICAL DRAWINGS.
32	SHOWER CURTAIN & ROD.
33	NEW BI-LEVEL DRINKING FOUNTAIN.
34	SHOWER DOOR.
35	ADA GRAB BARS, SEE GI004 FOR REQUIREMENTS.
36	ADA SHOWER SEAT.
37	SLOPE TO DRAIN.
38	SHOWER CURTAIN ROD, SEE ACCESSORY SCHEDULE.
39	SHOWER BENCH.

ARCHITECT 1877

ajc architects

703 east 1700 south
salt lake city, utah 84105
ph: 801.466.8818
fx: 801.466.4411
www.ajcarchitects.com

ARCHITECT / CONSULTANT

STATE OF UTAH
KENT R. RIGBY
No. 135090
05.18.2020
LICENSED ARCHITECT

OWNER INFORMATION

PROJECT DESCRIPTION

DUMKE GYMNASTICS TRAINING CENTER

1825 E. SOUTH CAMPUS DRIVE
SALT LAKE CITY, UT 84112

AHJ STAMP

SHEET NAME:
ENLARGED PLANS & INTERIOR ELEVATIONS

REVISIONS

MARK	DATE	DESCRIPTION

ISSUE DATA

ISSUE DATE:	10.18.21
ISSUE TYPE:	CD
DRAWN BY:	AT|DG
CHECKED BY:	KR
PROJECT#:	1877

SHEET NUMBER:
AE401

10/18/2021 4:31:05 PM S:\ajc users\taylor\Revit Local Files\21 0928 - 1877 - Dumke Womens Gymnastics Facility V20_detached_ataylorUV5v2.rvt

ALL IDEAS, DESIGNS, ARRANGEMENTS AND PLANS INDICATED OR REPRESENTED BY THIS DRAWING ARE OWNED BY, AND THE PROPERTY OF AJC ARCHITECTS PC AND WERE CREATED, EVOLVED, AND DEVELOPED FOR USE ON AND IN CONNECTION WITH THE SPECIFIED PROJECT. NONE OF THE IDEAS, DESIGNS, ARRANGEMENTS OR PLANS INDICATED OR REPRESENTED BY THIS DRAWING OR OTHER DOCUMENTS PREPARED BY AJC ARCHITECTS PC MAY BE USED BY OR DISCLOSED TO ANY PERSON, FIRM, OR CORPORATION FOR ANY PURPOSE WHATSOEVER WITHOUT WRITTEN CONSENT OF AJC ARCHITECTS PC. WRITTEN DIMENSIONS ON THESE DRAWINGS SHALL HAVE PRECEDENCE OVER SCALE DIMENSIONS. CONTRACTORS SHALL VERIFY AND BE RESPONSIBLE FOR ALL DIMENSIONS AND CONDITIONS ON THE JOB AND THIS OFFICE MUST BE NOTIFIED OF ANY VARIATION FROM THE DIMENSIONS AND CONDITIONS SHOWN BY THESE DRAWINGS. WARNING: REPRODUCTION HEREOF IS A CRIMINAL OFFENSE UNDER 18 U.S.C. SEC. 506. UNAUTHORIZED DISCLOSURE MAY CONSTITUTE TRADE SECRET MISAPPROPRIATION IN VIOLATION OF 12-24-2-311.1 ET. SEQ. AND OTHER LAWS.

ALL IDEAS, DESIGNS, ARRANGEMENTS AND PLANS INDICATED OR REPRESENTED BY THIS DRAWING ARE OWNED BY, AND THE PROPERTY OF, AJC ARCHITECTS PC, AND WERE CREATED, EVOLVED, AND DEVELOPED FOR USE ON, AND IN CONNECTION WITH, THE SPECIFIED PROJECT. NONE OF THE IDEAS, DESIGNS, ARRANGEMENTS OR PLANS SHALL BE USED BY OR DISCLOSED TO ANY PERSON, FIRM, OR CORPORATION FOR ANY PURPOSE WHATSOEVER WITHOUT WRITTEN CONSENT OF AJC ARCHITECTS PC. WRITTEN DIMENSIONS ON THESE DRAWINGS SHALL HAVE PRECEDENCE OVER SCALE DIMENSIONS. CONTRACTORS SHALL VERIFY AND BE RESPONSIBLE FOR ALL DIMENSIONS AND CONDITIONS ON THE JOB AND THIS OFFICE MUST BE NOTIFIED OF ANY VARIATION FROM THE DIMENSIONS AND CONDITIONS SHOWN BY THESE DRAWINGS. WARNING: REPRODUCTION HEREOF IS A CRIMINAL OFFENSE UNDER 18 U.S.C. 506; UNAUTHORIZED DISCLOSURE MAY CONSTITUTE TRADE SECRET MISAPPROPRIATION IN VIOLATION OF 17 U.S.C. § 1831 ET. SEQ. AND OTHER LAWS.

10/18/2021 4:31:11 PM S:\ajc users\taylor\Revit Local Files\21 0928 - 1877 - Dumke Womens Gymnastics Facility V20_detached_ataylorUv5V2.rvt

GENERAL NOTES:

- SEE SHEET GI003 FOR GENERAL NOTES LEGENDS AND ABBREVIATIONS.
- SEE GI002 FOR DRAWING INDEX.
- DO NOT SCALE DRAWINGS.
- CONTRACTOR / SUBCONTRACTOR SHALL VERIFY ALL DIMENSIONS AND CONDITIONS BEFORE BEGINNING WORK, AND SHALL REPORT TO THE ARCHITECT ANY ERRORS, INCONSISTENCIES OR OMISSIONS BEFORE BEGINNING WORK. SEE GENERAL NOTES AND SPECIFICATIONS.

KEYED NOTES:

1	ADA TOILET, SEE PLUMBING DRAWINGS
2	18" VERTICAL S.S. GRAB BAR, SEE ACCESSORY SCHEDULE.
3	SCHLUTER FINEC WALL TRIM.SEE SPECIFICATIONS.
4	SINK AND FAUCET, SEE PLUMBING DRAWINGS.
5	36" S.S. GRAB BAR.
6	FIELD VERIFY CONDITIONS FOR MIRROR LOCATIONS. ALL MIRROR TO BE CENTERED ON PLUMBING FIXTURE.COORDINATE MIRROR SIZES WITH ELECTRICAL LIGHT FIXTURE LOCATIONS AND SIZES.COORDINATION REQUIRED WITH ELECTRICAL.
7	SCHLUTER COVE TRIM. SEE SPECIFICATIONS.
8	ELECTRICAL LIGHT FIXTURE, SEE ELECTRICAL DRAWINGS.
9	42" S.S. GRAB BAR.
10	VANITY LIGHT, SEE EXLECTRICAL DRAWINGS.
11	SOAP DISPENSER, SEE ACCESSORY SCHEDULE.
12	ADA PIPE WRAP ON ALL EXPOSED PIPES.
13	TOILET TISSUE DISPENSER, SEE ACCESSORY SCHEDULE.
14	SANITARY NAPKIN DISPENSER, SEE ACCESSORY SCHEDULE.
15	NO GYP. ON INSIDE OF WALL.
16	FLOOR DRAIN. SLOPE FLOOR TO DRAIN AT 1/4" PER FT. SEE PLUMBING DWG'S.

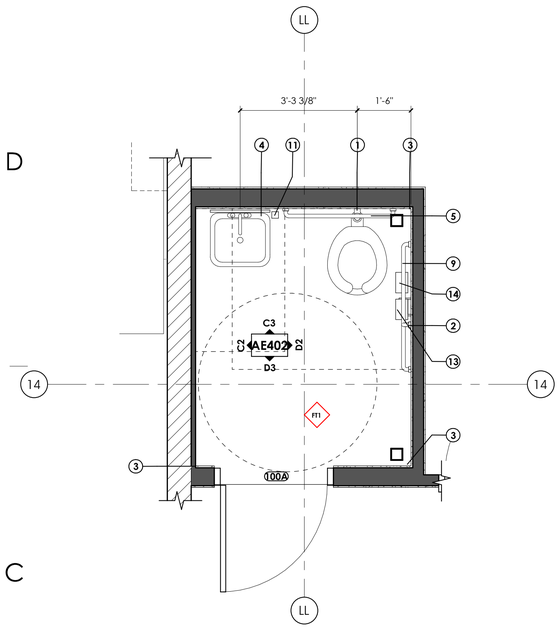

C1 PARTIAL PLAN - RM 100A
1/2" = 1'-0"

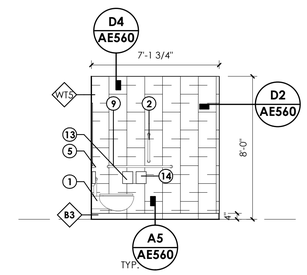

D2 INT. ELEV. - RM 100A NORTH
1/4" = 1'-0"

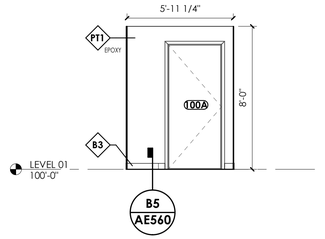

D3 INT. ELEV. - RM 100A EAST
1/4" = 1'-0"

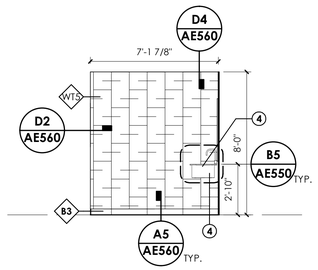

D2 INT. ELEV. - RM 100A SOUTH
1/4" = 1'-0"

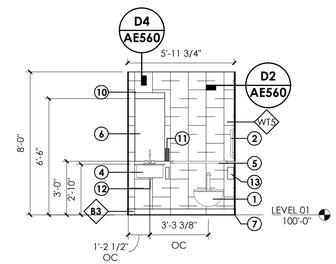

D3 INT. ELEV. - RM 100A WEST
1/4" = 1'-0"

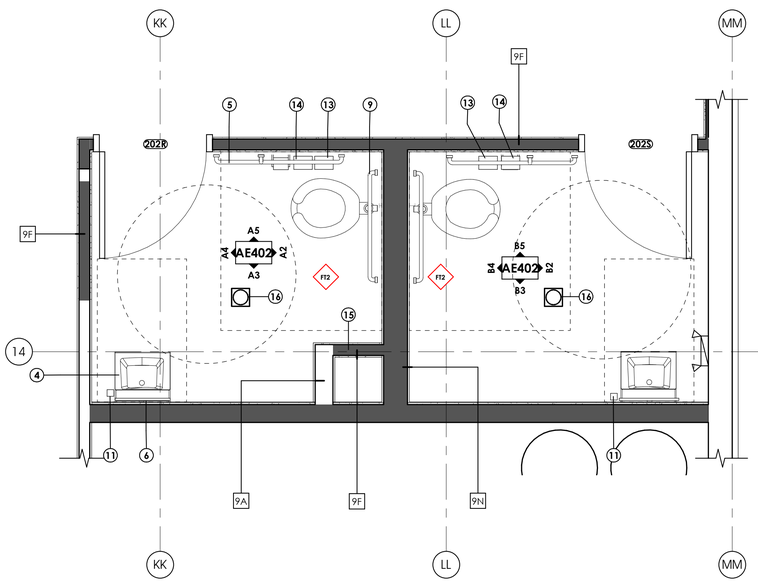

A1 PARTIAL PLAN - RM 202R / RM 202S
1/2" = 1'-0"

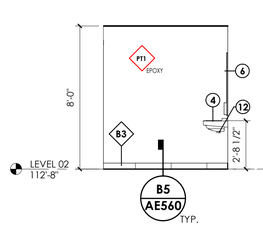

B2 INT. ELEV. - RM 202S NORTH
1/4" = 1'-0"

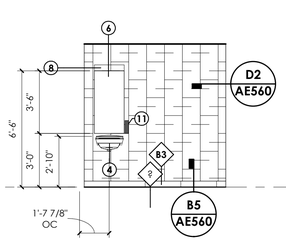

B3 INT. ELEV. - RM 202S EAST
1/4" = 1'-0"

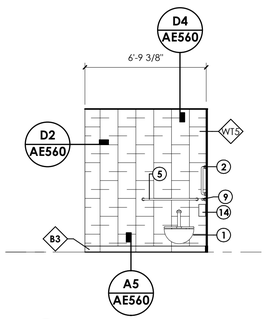

B4 INT. ELEV. - RM 202S SOUTH
1/4" = 1'-0"

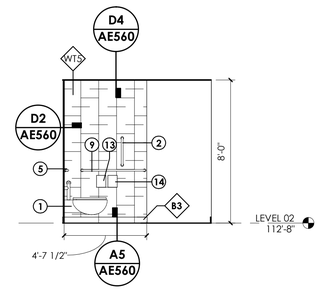

B5 INT. ELEV. - RM 202S WEST
1/4" = 1'-0"

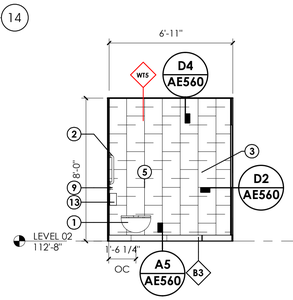

A2 INT. ELEV. - RM 202R NORTH
1/4" = 1'-0"

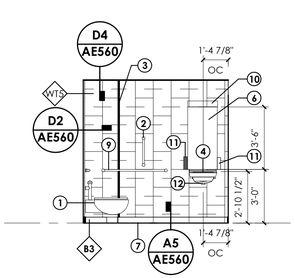

A3 INT. ELEV. - RM 202R EAST
1/4" = 1'-0"

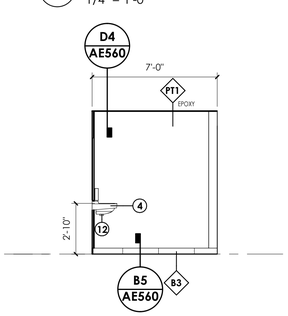

A4 INT. ELEV. - RM 202R SOUTH
1/4" = 1'-0"

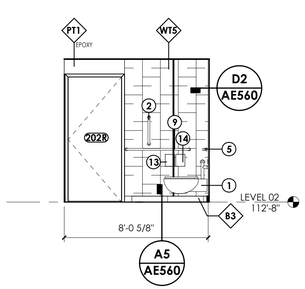

A5 INT. ELEV. - RM 202R WEST
1/4" = 1'-0"

ARCHITECT 1877
ajc architects
703 east 1700 south
salt lake city, utah 84105
ph: 801.466.8818
fx: 801.466.4411
www.ajcarchitects.com

ARCHITECT / CONSULTANT

STATE OF UTAH
KENT B. RIGBY
No. 135090
05.18.2020
LICENSED ARCHITECT

OWNER INFORMATION

PROJECT DESCRIPTION

DUMKE GYMNASTICS TRAINING CENTER
1825 E. SOUTH CAMPUS DRIVE
SALT LAKE CITY, UT 84112

AHJ STAMP

SHEET NAME:
ENLARGED PLANS & INTERIOR ELEVATIONS

REVISIONS

MARK	DATE	DESCRIPTION

ISSUE DATA

ISSUE DATE:	10.18.21
ISSUE TYPE:	CD
DRAWN BY:	AT|DG
CHECKED BY:	KR
PROJECT#:	1877

SHEET NUMBER:
AE402

ALL IDEAS, DESIGNS, ARRANGEMENTS AND PLANS INDICATED OR REPRESENTED BY THIS DRAWING ARE OWNED BY AND THE PROPERTY OF AJC ARCHITECTS PC AND WERE CREATED, EVOLVED, AND DEVELOPED FOR USE ON AND IN CONNECTION WITH THE SPECIFIED PROJECT. NONE OF THE IDEAS, DESIGNS, ARRANGEMENTS OR PLANS SHALL BE USED BY OR DISCLOSED TO ANY PERSON, FIRM, OR CORPORATION FOR ANY PURPOSE WHATSOEVER WITHOUT WRITTEN CONSENT OF AJC ARCHITECTS PC. WRITTEN DIMENSIONS ON THESE DRAWINGS SHALL HAVE PRECEDENCE OVER SCALE DIMENSIONS. CONTRACTORS SHALL VERIFY AND BE RESPONSIBLE FOR ALL DIMENSIONS AND CONDITIONS ON THE JOB AND THIS OFFICE MUST BE NOTIFIED OF ANY VARIATION FROM THE DIMENSIONS AND CONDITIONS SHOWN BY THESE DRAWINGS. WARNING: REPRODUCTION HEREOF IS A CRIMINAL OFFENSE UNDER 18 U.S.C. SEC. 506; UNAUTHORIZED DISCLOSURE MAY CONSTITUTE TRADE SECRET MISAPPROPRIATION IN VIOLATION OF 18 U.S.C. SEC. 1832, AND OTHER LAWS.

10/18/2021 4:31:17 PM S:\ajc users\taylor\Revit Local Files\21 0928 - 1877 - Dumke Womens Gymnastics Facility V20_detached_taylorUV5V2.rvt

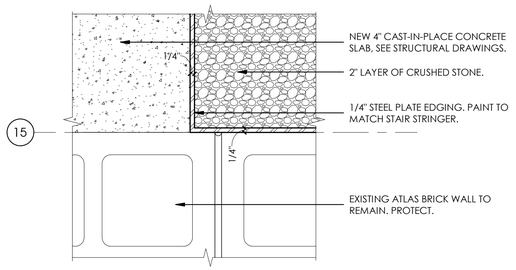

D1 STEEL EDGE DETAIL 1
3" = 1'-0"

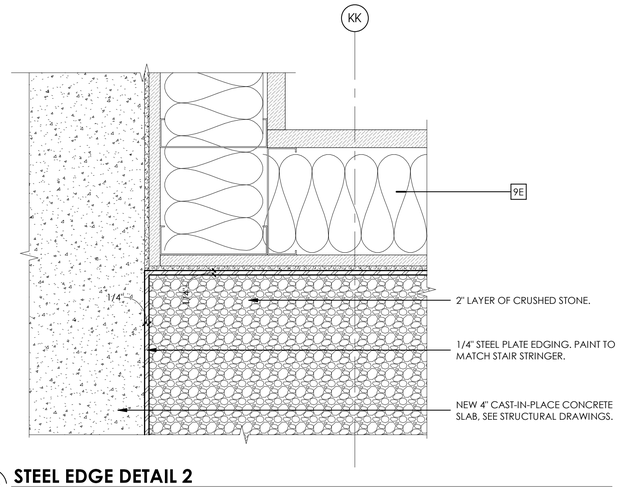

D2 STEEL EDGE DETAIL 2
3" = 1'-0"

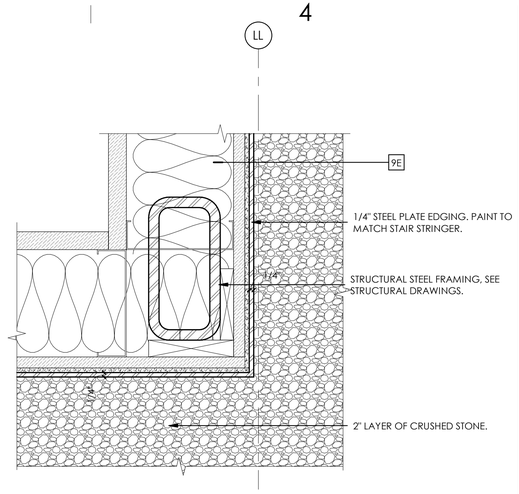

D4 STEEL EDGE DETAIL 3
3" = 1'-0"

GENERAL NOTES:

- SEE SHEET GI003 FOR GENERAL NOTES LEGENDS AND ABBREVIATIONS.
- SEE GI002 FOR DRAWING INDEX.
- DO NOT SCALE DRAWINGS.
- CONTRACTOR / SUBCONTRACTOR SHALL VERIFY ALL DIMENSIONS AND CONDITIONS BEFORE BEGINNING WORK, AND SHALL REPORT TO THE ARCHITECT ANY ERRORS, INCONSISTENCIES OR OMISSIONS BEFORE BEGINNING WORK. SEE GENERAL NOTES AND SPECIFICATIONS.

KEYED NOTES:

1	ALIGN EDGE OF CRUSHED STONE WITH FACE OF ELEVATOR CORE.
2	OUTLINE OF STAIR ABOVE.
3	1/4" STEEL PLATE EDGING. PAINT TO MATCH STAIR STRINGER.
4	EXISTING ATLAS BRICK WALL TO REMAIN. PROTECT.
5	2" LAYER OF CRUSHED STONE.
6	NEW 4" CAST-IN-PLACE CONCRETE SLAB, SEE STRUCTURAL DRAWINGS.
7	FREE DRAINING GRANULAR FILL, SEE STRUCTURAL DRAWINGS.
8	STRUCTURAL STEEL FRAMING, SEE STRUCTURAL DRAWINGS.
9	THERMALLY BROKEN ALUMINUM CURTAIN WALL SYSTEM, SEE WINDOW TYPES.
10	1 1/2" STEEL PIPE CANE DETECTION GUARD.

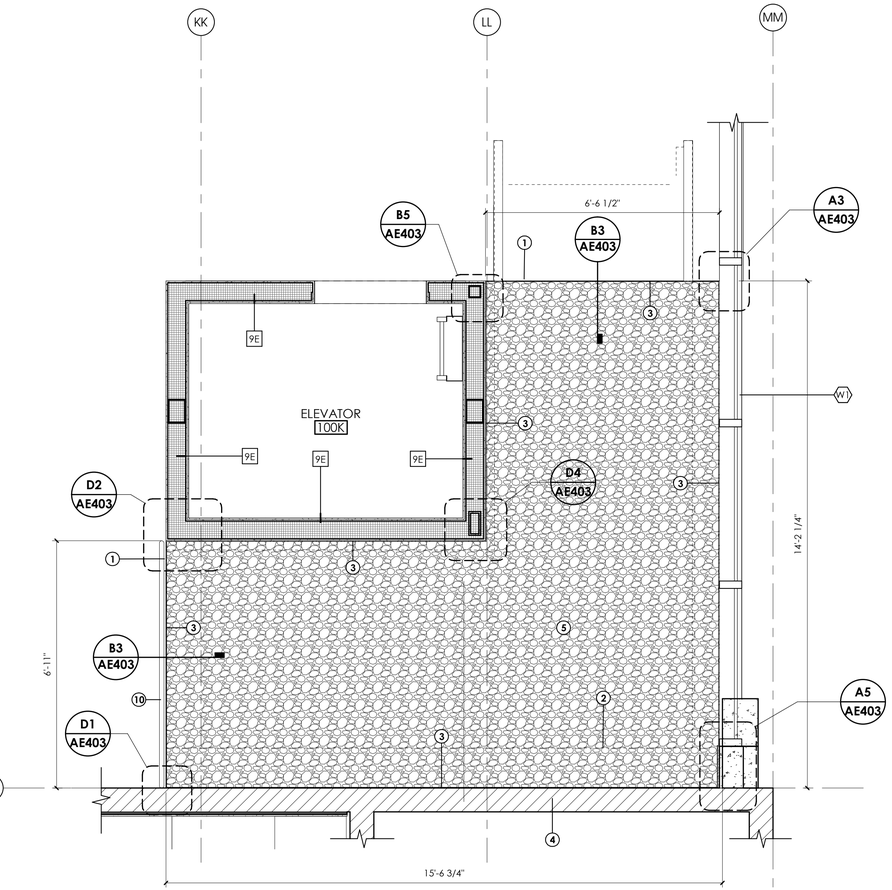

A1 PARTIAL PLAN - ROCK GARDEN
1/2" = 1'-0"

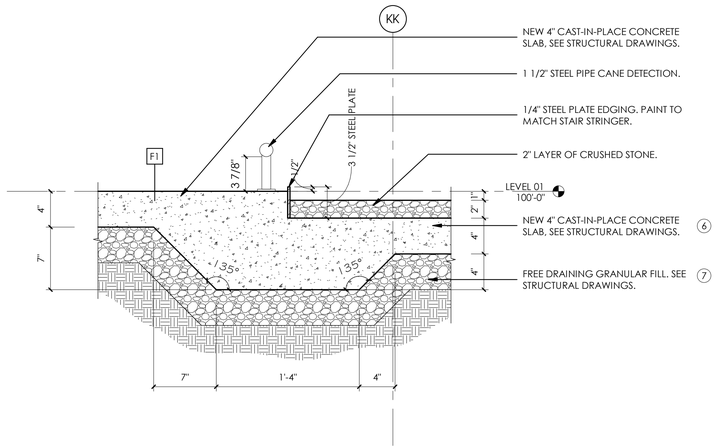

B3 SECTION DETAIL - ROCK GARDEN
1 1/2" = 1'-0"

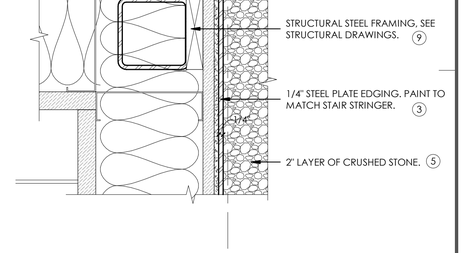

B5 STEEL EDGE DETAIL 4
3" = 1'-0"

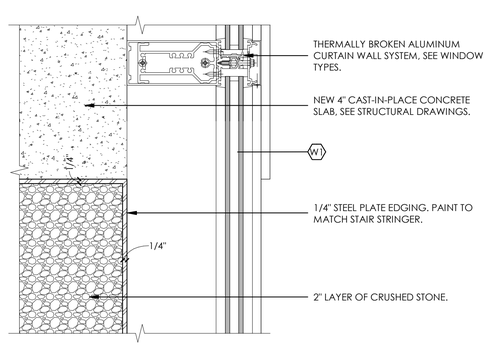

A3 STEEL EDGE DETAIL 5
3" = 1'-0"

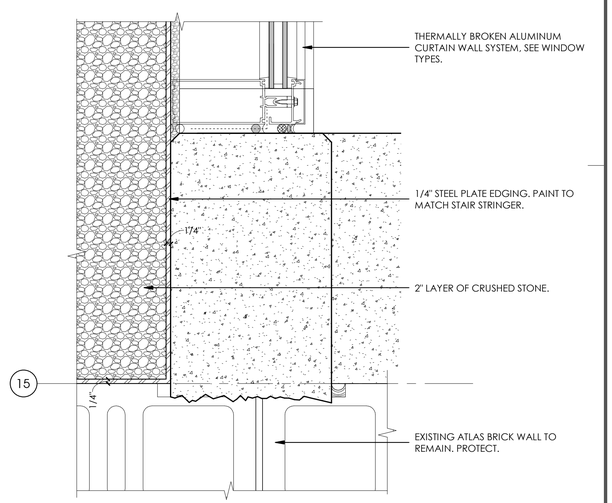

A5 STEEL EDGE DETAIL 6
3" = 1'-0"

ARCHITECT 1877
ajc architects
703 east 1700 south
salt lake city, utah 84105
ph: 801.466.8818
fx: 801.466.4411
www.ajcarchitects.com

ARCHITECT / CONSULTANT

STATE OF UTAH
KENT B. RIGBY
No. 135090
05.18.2020
LICENSED ARCHITECT

OWNER INFORMATION

PROJECT DESCRIPTION

DUMKE GYMNASTICS TRAINING CENTER

1825 E. SOUTH CAMPUS DRIVE
SALT LAKE CITY, UT 84112

AHJ STAMP

SHEET NAME:
ENLARGED PLAN

REVISIONS

MARK	DATE	DESCRIPTION

ISSUE DATA

ISSUE DATE:	10.18.21
ISSUE TYPE:	CD
DRAWN BY:	AT|DG
CHECKED BY:	KR
PROJECT#:	1877

SHEET NUMBER:
AE403

10/18/2021 4:31:18 PM S:\ajc users\ataylor\Revit Local Files\21 0928 - 1877 - Dumke Womens Gymnastics Facility V20_detached_ataylorUV5V2.rvt

ALL IDEAS, DESIGNS, ARRANGEMENTS AND PLANS INDICATED OR REPRESENTED BY THIS DRAWING ARE OWNED BY AND THE PROPERTY OF AJC ARCHITECTS PC AND WERE CREATED, EVOLVED, AND DEVELOPED FOR USE ON AND IN CONNECTION WITH THE SPECIFIED PROJECT. NONE OF THE IDEAS, DESIGNS, ARRANGEMENTS OR PLANS INDICATED IN OR REPRESENTED BY THIS DRAWING, INCLUDING WITHOUT LIMITATION, THE ARCHITECTURAL WORKS EMBODIED IN THE DRAWING, SHALL BE USED BY OR DISCLOSED TO ANY PERSON, FIRM, OR CORPORATION FOR ANY PURPOSE WHATSOEVER WITHOUT WRITTEN CONSENT OF AJC ARCHITECTS PC. WRITTEN DIMENSIONS ON THESE DRAWINGS SHALL HAVE PRECEDENCE OVER SCALE DIMENSIONS. CONTRACTORS SHALL VERIFY AND BE RESPONSIBLE FOR ALL DIMENSIONS AND CONDITIONS ON THE JOB AND THIS OFFICE MUST BE NOTIFIED OF ANY VARIATION FROM THE DIMENSIONS AND CONDITIONS SHOWN BY THESE DRAWINGS. WARNING - REPRODUCTION HEREOF IS A CRIMINAL OFFENSE UNDER 18 U.S.C. 506. UNAUTHORIZED DISCLOSURE MAY CONSTITUTE TRADE SECRET MISAPPROPRIATION IN VIOLATION OF 17 C.F.R. § 240.10b-5, 18 U.S.C. 1836, 1839 AND OTHER LAWS.

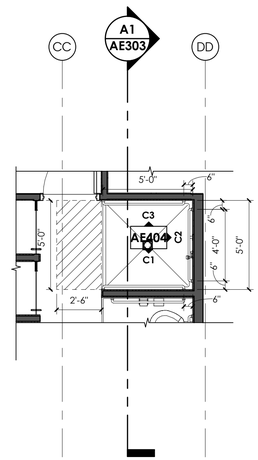

D1 ENLARGED PLAN - ADA SHOWER
1/4" = 1'-0"

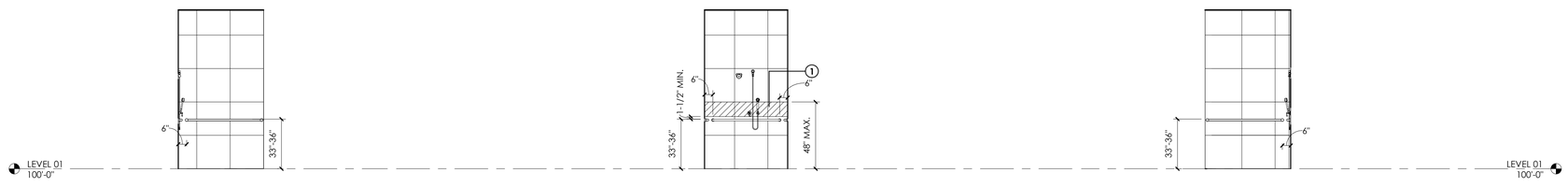

C1 ADA SHOWER - EAST
1/4" = 1'-0"

C2 ADA SHOWER - NORTH
1/4" = 1'-0"

C3 ADA SHOWER - WEST
1/4" = 1'-0"

GENERAL NOTES:

- SEE SHEET GI003 FOR GENERAL NOTES LEGENDS AND ABBREVIATIONS.
- SEE GI002 FOR DRAWING INDEX.
- DO NOT SCALE DRAWINGS.
- CONTRACTOR / SUBCONTRACTOR SHALL VERIFY ALL DIMENSIONS AND CONDITIONS BEFORE BEGINNING WORK, AND SHALL REPORT TO THE ARCHITECT ANY ERRORS, INCONSISTENCIES OR OMISSIONS BEFORE BEGINNING WORK. SEE GENERAL NOTES AND SPECIFICATIONS.
- SEE FINISH LEGEND, SHEET AE620.

KEYED NOTES:

1 ADA SHOWER CONTROLS TO BE WITHIN THE HATCHED AREA.

ARCHITECT 1877
ajc architects
703 east 1700 south
salt lake city, utah 84105
ph: 801.466.8818
fx: 801.466.4411
www.ajcarchitects.com

ARCHITECT / CONSULTANT
STATE OF UTAH
KENT R. RIGBY
No. 135090
05.18.2020
LICENSED ARCHITECT

OWNER INFORMATION

PROJECT DESCRIPTION
DUMKE
GYMNASTICS
TRAINING
CENTER
1825 E. SOUTH CAMPUS DRIVE
SALT LAKE CITY, UT 84112

AHJ STAMP

SHEET NAME:
ENLARGED PLANS &
INTERIOR ELEVATIONS

REVISIONS

MARK	DATE	DESCRIPTION

ISSUE DATA

ISSUE DATE:	10.18.21
ISSUE TYPE:	CD
DRAWN BY:	AT|DG
CHECKED BY:	KR
PROJECT#:	1877

SHEET NUMBER:
AE404

10/18/2021 4:31:22 PM S:\ajc users\taylor\Revit Local Files\21 0928 - 1877 - Dumke Womens Gymnastics Facility V20_detached_ataylorUV5V2.rvt

ALL IDEAS, DESIGNS, ARRANGEMENTS AND PLANS INDICATED OR REPRESENTED BY THIS DRAWING ARE OWNED BY AND THE PROPERTY OF AJC ARCHITECTS PC AND WERE CREATED, EVOLVED, AND DEVELOPED FOR USE ON AND IN CONNECTION WITH THE SPECIFIED PROJECT. NONE OF THE IDEAS, DESIGNS, ARRANGEMENTS OR PLANS INDICATED OR REPRESENTED BY THIS DRAWING MAY BE USED BY OR DISCLOSED TO ANY PERSON, FIRM, OR CORPORATION FOR ANY PURPOSE WHATSOEVER WITHOUT WRITTEN CONSENT OF AJC ARCHITECTS PC. WRITTEN DIMENSIONS ON THESE DRAWINGS SHALL HAVE PRECEDENCE OVER SCALE DIMENSIONS. CONTRACTORS SHALL VERIFY AND BE RESPONSIBLE FOR ALL DIMENSIONS AND CONDITIONS ON THE JOB AND THIS OFFICE MUST BE NOTIFIED OF ANY VARIATION FROM THE DIMENSIONS AND CONDITIONS SHOWN BY THESE DRAWINGS. WARNING: REPRODUCTION HEREOF IS A CRIMINAL OFFENSE UNDER 18 U.S.C. 506. UNAUTHORIZED DISCLOSURE MAY CONSTITUTE TRADE SECRET MISAPPROPRIATION IN VIOLATION OF 12-24-2 31-1 ET. SEQ. AND OTHER LAWS.

GENERAL NOTES:

- SEE SHEET GI003 FOR GENERAL NOTES LEGENDS AND ABBREVIATIONS.
- SEE GI002 FOR DRAWING INDEX.
- DO NOT SCALE DRAWINGS.
- CONTRACTOR / SUBCONTRACTOR SHALL VERIFY ALL DIMENSIONS AND CONDITIONS BEFORE BEGINNING WORK, AND SHALL REPORT TO THE ARCHITECT ANY ERRORS, INCONSISTENCIES OR OMISSIONS BEFORE BEGINNING WORK. SEE GENERAL NOTES AND SPECIFICATIONS.

KEYED NOTES:

1 REFRIGERATOR.
2 UNDER SOFFIT LIGHTING. SEE ELECTRICAL.
3 SINK AND FAUCET. SEE PLUMBING DRAWINGS.
4 FURNITURE. SEE FURNITURE SPECS BY VENDOR.
5 TALL CABINETS. SEE MILLWORK DETAILS.
6 3M1.CUSTOM RED FILM.SEE SPECS.
7 SCHLUTER FINEC WALL TRIM.SEE SPECIFICATIONS.
8 STEEL CANOPY. PAINTED.
9 INTERIOR LIGHTING. SEE ELECTRICAL DRAWINGS.
10 QUARTZ COUNTERTOP WITH WATERFALL EDGE.
11 CASEWORK PANEL. FINISH TO MATCH ADJACENT CASEWORK.
12 CASEWORK. SEE INTERIOR ELEVATIONS AND FINISH SCHEDULE.
13 P-LAM BASE
14 PAINTED. FINISH TBD.
15 STRUCTURAL SILICONE GLAZED JOINTS. EQUALLY SPACED.



D1 INT. ELEV. - RM 100G EAST
1/4" = 1'-0"

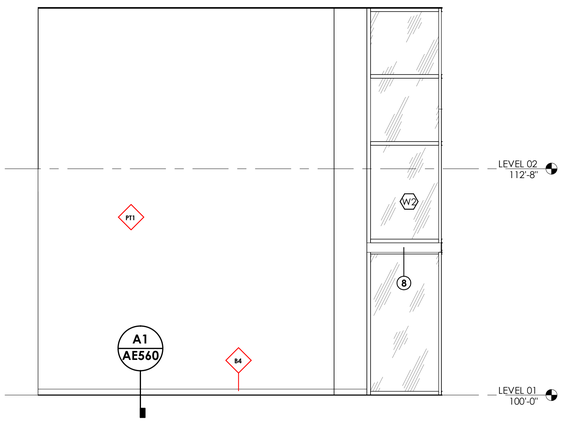

D3 INT. ELEV. - RM 100G WEST
1/4" = 1'-0"

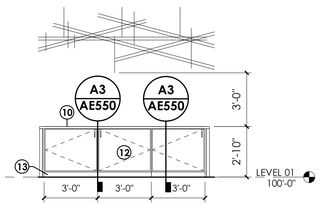

C2 INT.ELEV.-RM 101 KITC ISLAND SOUTH
1/4" = 1'-0"

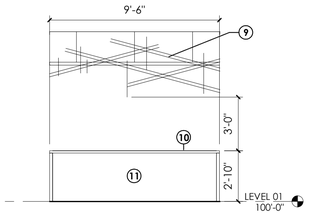

C1 INT. ELEV.-RM 101 KIT ISLAND NORTH
1/4" = 1'-0"



*SEE AE400 FOR STAIR DETAILS

B1 INT. ELEV. - RM 100G NORTH
1/4" = 1'-0"

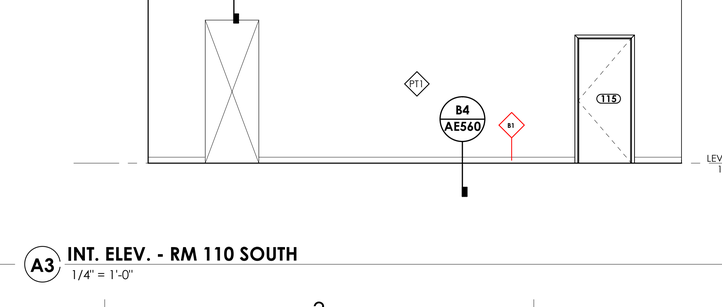

B3 INT. ELEV. - RM 100G SOUTH
1/4" = 1'-0"

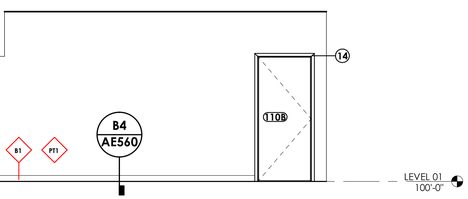

B5 INT. ELEV. - RM 110 EAST
1/4" = 1'-0"

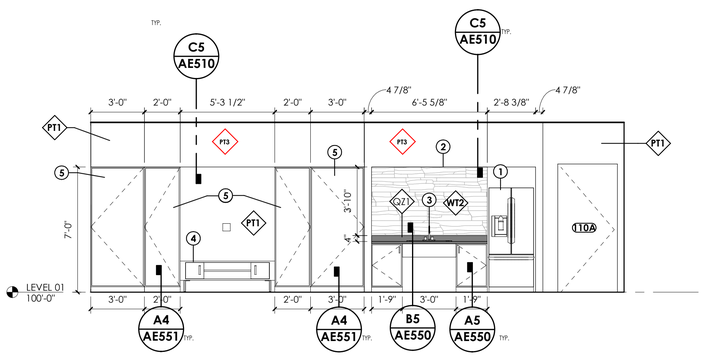

A1 INT. ELEV. - RM 110 NORTH
1/4" = 1'-0"

A3 INT. ELEV. - RM 110 SOUTH
1/4" = 1'-0"

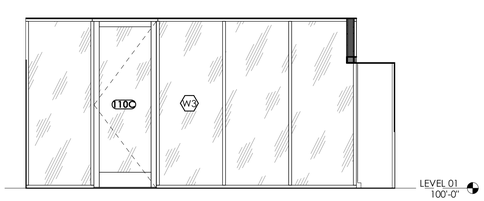

A5 INT. ELEV. - RM 110 WEST
1/4" = 1'-0"

ARCHITECT 1877

ajc architects

703 east 1700 south
salt lake city, utah 84105
ph: 801.466.8818
fx: 801.466.4411
www.ajcarchitects.com

ARCHITECT / CONSULTANT

STATE OF UTAH
KENT R. RIGBY
No. 135090
05.18.2020
LICENSED ARCHITECT

OWNER INFORMATION

PROJECT DESCRIPTION

DUMKE GYMNASTICS TRAINING CENTER

1825 E. SOUTH CAMPUS DRIVE
SALT LAKE CITY, UT 84112

AHJ STAMP

SHEET NAME:
INTERIOR ELEVATIONS

REVISIONS

MARK	DATE	DESCRIPTION

ISSUE DATA

ISSUE DATE:	10.18.21
ISSUE TYPE:	CD
DRAWN BY:	AT|DG
CHECKED BY:	KR
PROJECT#:	1877

SHEET NUMBER:

AE410

10/18/2021 4:31:26 PM S:\ajc users\ataylor\Revit Local Files\21 0928 - 1877 - Dumke Womens Gymnastics Facility V20_detached_ataylorUV5V2.rvt

ALL IDEAS, DESIGNS, ARRANGEMENTS AND PLANS INDICATED OR REPRESENTED BY THIS DRAWING ARE OWNED BY, AND THE PROPERTY OF, AJC ARCHITECTS PC, AND WERE CREATED, EVOLVED, AND DEVELOPED FOR USE ON, AND IN CONNECTION WITH, THE SPECIFIED PROJECT. NONE OF THE IDEAS, DESIGNS, ARRANGEMENTS OR PLANS INDICATED OR REPRESENTED BY THIS DRAWING OR OTHER DOCUMENTS MAY BE USED BY OR DISCLOSED TO ANY PERSON, FIRM, OR CORPORATION FOR ANY PURPOSE WHATSOEVER WITHOUT WRITTEN CONSENT OF AJC ARCHITECTS PC. WRITTEN DIMENSIONS ON THESE DRAWINGS SHALL HAVE PRECEDENCE OVER SCALE DIMENSIONS. CONTRACTORS SHALL VERIFY AND BE RESPONSIBLE FOR ALL DIMENSIONS AND CONDITIONS ON THE JOB AND THIS OFFICE MUST BE NOTIFIED OF ANY VARIATION FROM THE DIMENSIONS AND CONDITIONS SHOWN BY THESE DRAWINGS. WARNING: REPRODUCTION HEREOF IS A CRIMINAL OFFENSE UNDER 18 U.S.C. SEC. 506. UNAUTHORIZED DISCLOSURE MAY CONSTITUTE TRADE SECRET MISAPPROPRIATION IN VIOLATION OF 12-24-2-311.1 ET. SEQ. AND OTHER LAWS.

1 2 3 4 5

GENERAL NOTES:

- SEE SHEET GI003 FOR GENERAL NOTES LEGENDS AND ABBREVIATIONS.
- SEE GI002 FOR DRAWING INDEX.
- DO NOT SCALE DRAWINGS.
- CONTRACTOR / SUBCONTRACTOR SHALL VERIFY ALL DIMENSIONS AND CONDITIONS BEFORE BEGINNING WORK, AND SHALL REPORT TO THE ARCHITECT ANY ERRORS, INCONSISTENCIES OR OMISSIONS BEFORE BEGINNING WORK. SEE GENERAL NOTES AND SPECIFICATIONS.

KEYED NOTES:

1 LOCKERS.
2 4" BACKSPLASH.
3 FIELD VERIFY CONDITIONS FOR MIRROR LOCATIONS. ALL MIRROR TO BE CENTERED ON PLUMBING FIXTURE.COORDINATE MIRROR SIZES WITH ELECTRICAL LIGHT FIXTURE LOCATIONS AND SIZES.COORDINATION REQUIRED WITH ELECTRICAL.
4 P-LAM LOCKERS. FOR FINISH, SEE FINISH SCHEDULE.
5 P-LAM CABINET DOOR, SEE FINISH LEGEND
6 STACKING WASHER DRYER COMBO. REFER TO SPECS.
7 3/4" P-LAM FRAME, SEE FINISH LEGEND.
8 CUSTOM DESIGN CABINETS. SEE FINISH LEGEND FOR FINISH DETAILS.
9 18"X18" UNDER COUNTER SUPPORT BRACKET @ 32" O.C. MAX.
10 SHELVING BY SPACE SAVER. REFER TO SPECIFICATIONS FOR DETAIL AND TYPE.
11 SLOTTED FACE FOR AIRFLOW.
12 RECESSED FACE FOR NAMEPLATE.
13 LIFT UP DOOR.
14 UPHOLSTERED SEAT CUSHION.
15 APPLIANCE BASE.

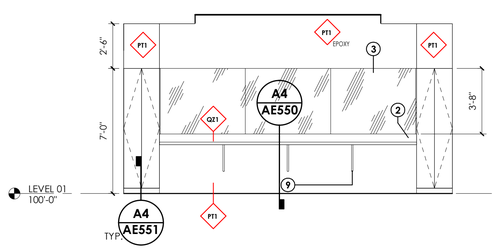

D1 INT. ELEV. - RM 120 EAST
1/4" = 1'-0"

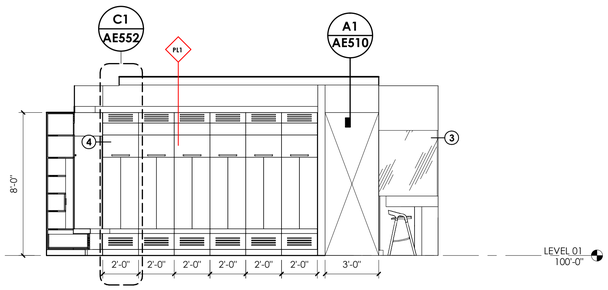

D2 INT. ELEV. - RM 120 NORTH
1/4" = 1'-0"

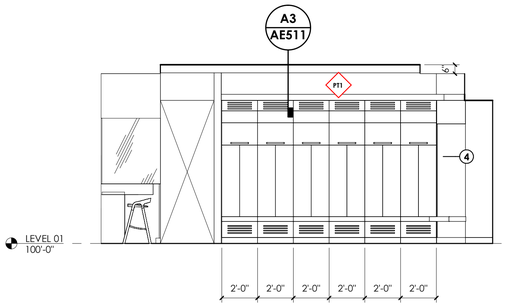

C1 INT. ELEV. - RM 120 SOUTH
1/4" = 1'-0"

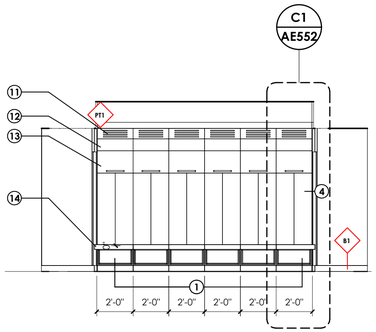

C2 INT. ELEV. - RM 120 WEST
1/4" = 1'-0"

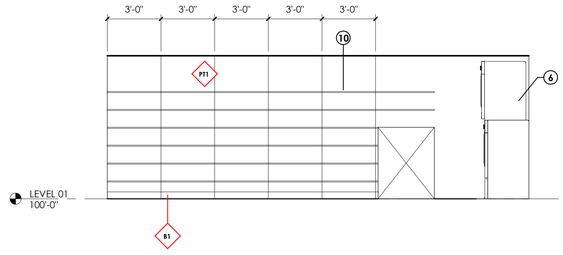

A1 INT. ELEV. - RM 115 EAST
1/4" = 1'-0"

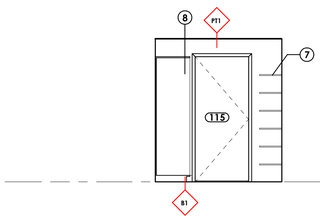

A2 INT. ELEV. - RM 115 NORTH
1/4" = 1'-0"

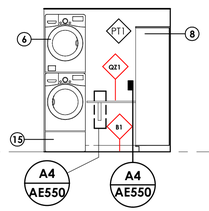

A3 INT. ELEV. - RM 115 SOUTH
1/4" = 1'-0"

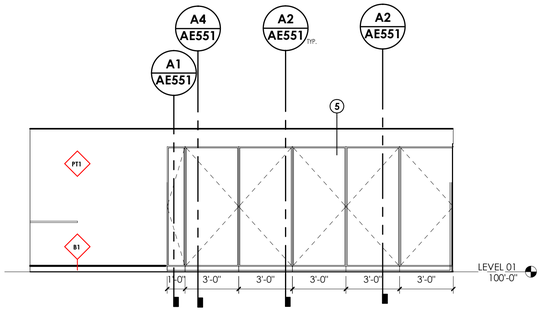

A4 INT. ELEV. - RM 115 WEST
1/4" = 1'-0"

ARCHITECT 1877
ajc architects
703 east 1700 south
salt lake city, utah 84105
ph: 801.466.8818
fx: 801.466.4411
www.ajcarchitects.com

ARCHITECT / CONSULTANT

STATE OF UTAH
KENT B. RIGBY
No. 135090
05.18.2020
LICENSED ARCHITECT

OWNER INFORMATION

PROJECT DESCRIPTION

DUMKE GYMNASTICS TRAINING CENTER

1825 E. SOUTH CAMPUS DRIVE
SALT LAKE CITY, UT 84112

AHJ STAMP

SHEET NAME:
INTERIOR ELEVATIONS

REVISIONS

MARK	DATE	DESCRIPTION

ISSUE DATA

ISSUE DATE:	10.18.21
ISSUE TYPE:	CD
DRAWN BY:	AT|DG
CHECKED BY:	KR
PROJECT#:	1877

SHEET NUMBER:
AE411

10/18/2021 4:31:30 PM S:\ajc users\taylor\Revit Local Files\21 0928 - 1877 - Dumke Womens Gymnastics Facility V20_detached_taylorUV5V2.rvt

ALL IDEAS, DESIGNS, ARRANGEMENTS AND PLANS INDICATED OR REPRESENTED BY THIS DRAWING ARE OWNED BY AND THE PROPERTY OF AJC ARCHITECTS PC AND WERE CREATED, EVOLVED, AND DEVELOPED FOR USE ON AND IN CONNECTION WITH THE SPECIFIED PROJECT. NONE OF THE IDEAS, DESIGNS, ARRANGEMENTS OR PLANS INDICATED IN THIS DRAWING ARE TO BE USED BY OR DISCLOSED TO ANY PERSON, FIRM, OR CORPORATION FOR ANY PURPOSE WHATSOEVER WITHOUT WRITTEN CONSENT OF AJC ARCHITECTS PC. WRITTEN DIMENSIONS ON THESE DRAWINGS SHALL HAVE PRECEDENCE OVER SCALE DIMENSIONS. CONTRACTORS SHALL VERIFY AND BE RESPONSIBLE FOR ALL DIMENSIONS AND CONDITIONS ON THE JOB AND THIS OFFICE MUST BE NOTIFIED OF ANY VARIATION FROM THE DIMENSIONS AND CONDITIONS SHOWN IN THESE DRAWINGS. WARNING - REPRODUCTION HEREOF IS A CRIMINAL OFFENSE UNDER 18 U.S.C. SEC. 506. UNAUTHORIZED DISCLOSURE MAY CONSTITUTE TRADE SECRET MISAPPROPRIATION IN VIOLATION OF 7 C.F.R. 24.2 31.1. ET. SEQ. AND OTHER LAWS.

GENERAL NOTES:

- SEE SHEET GI003 FOR GENERAL NOTES LEGENDS AND ABBREVIATIONS.
- SEE GI002 FOR DRAWING INDEX.
- DO NOT SCALE DRAWINGS.
- CONTRACTOR / SUBCONTRACTOR SHALL VERIFY ALL DIMENSIONS AND CONDITIONS BEFORE BEGINNING WORK, AND SHALL REPORT TO THE ARCHITECT ANY ERRORS, INCONSISTENCIES OR OMISSIONS BEFORE BEGINNING WORK. SEE GENERAL NOTES AND SPECIFICATIONS.

KEYED NOTES:

1 RECESSED FIRE EXTINGUISHER CABINET
2 TRAINING EQUIPMENT.OWNER PROVIDED.
3 SINK AND FAUCET, SEE PLUMBING DRAWINGS.
4 UNDER SOFFIT LIGHTING. SEE ELECTRICAL.
5 P-LAM CABINET DOOR, SEE FINISH LEGEND
6 EXISTING STEEL COLUMN TO REMAIN. PROTECT. PAINT.

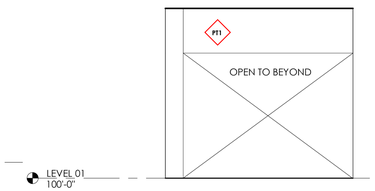

C1 INT. ELEV. - RM 100 EAST
1/4" = 1'-0"



C2 INT. ELEV. - RM 100 NORTH
1/4" = 1'-0"

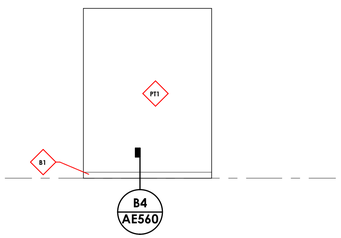

C3 INT. ELEV. - RM 100 SOUTH
1/4" = 1'-0"

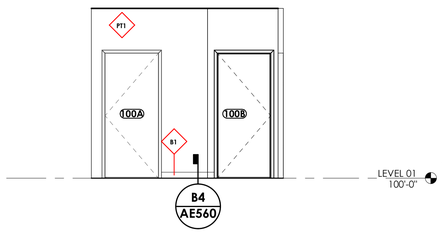

C5 INT. ELEV. - RM 100 WEST
1/4" = 1'-0"

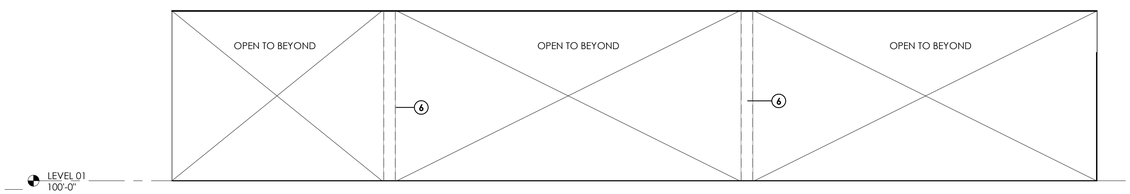

B1 INT. ELEV. - RM 108 EAST
1/4" = 1'-0"

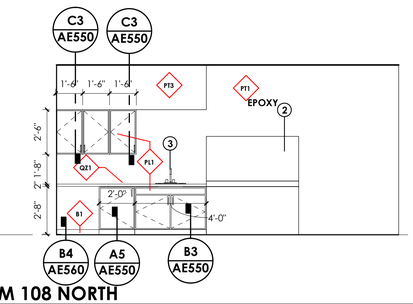

B4 INT. ELEV. - RM 108 NORTH
1/4" = 1'-0"

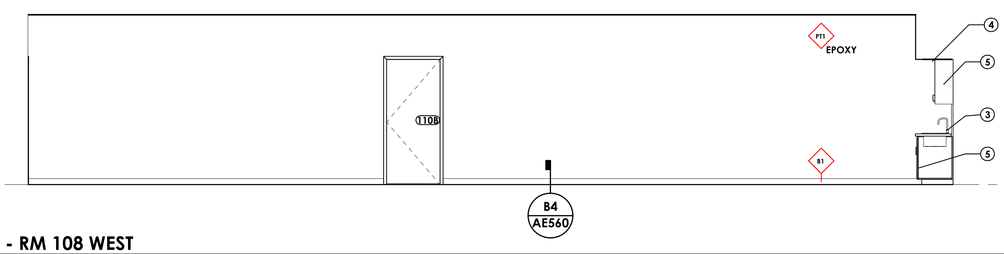

A1 INT. ELEV. - RM 108 WEST
1/4" = 1'-0"

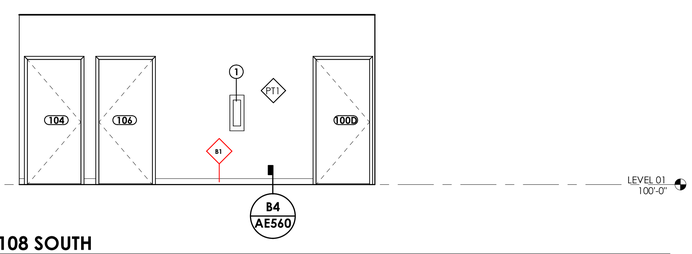

A4 INT. ELEV. - RM 108 SOUTH
1/4" = 1'-0"

ARCHITECT 1877
ajc architects
703 east 1700 south
salt lake city, utah 84105
ph: 801.466.8818
fx: 801.466.4411
www.ajcarchitects.com

ARCHITECT / CONSULTANT

STATE OF UTAH
KENT B. RIGBY
No. 135090
05.18.2020
LICENSED ARCHITECT

OWNER INFORMATION

PROJECT DESCRIPTION

DUMKE GYMNASTICS TRAINING CENTER

1825 E. SOUTH CAMPUS DRIVE
SALT LAKE CITY, UT 84112

AHJ STAMP

SHEET NAME:
INTERIOR ELEVATIONS

REVISIONS

MARK	DATE	DESCRIPTION

ISSUE DATA

ISSUE DATE:	10.18.21
ISSUE TYPE:	CD
DRAWN BY:	AT|DG
CHECKED BY:	KR
PROJECT#:	1877

SHEET NUMBER:
AE412

ALL IDEAS, DESIGNS, ARRANGEMENTS AND PLANS INDICATED OR REPRESENTED BY THIS DRAWING ARE OWNED BY AND THE PROPERTY OF AJC ARCHITECTS PC AND WERE CREATED, EVOLVED, AND DEVELOPED FOR USE ON AND IN CONNECTION WITH THE SPECIFIED PROJECT. NONE OF THE IDEAS, DESIGNS, ARRANGEMENTS OR PLANS INDICATED IN OR REPRESENTED BY THIS DRAWING, ALL OF WHICH ARE COPYRIGHTED BY AJC ARCHITECTS PC, MAY BE USED BY OR DISCLOSED TO ANY PERSON, FIRM, OR CORPORATION FOR ANY PURPOSE WHATSOEVER WITHOUT WRITTEN CONSENT OF AJC ARCHITECTS PC. WRITTEN DIMENSIONS ON THESE DRAWINGS SHALL HAVE PRECEDENCE OVER SCALE DIMENSIONS. CONTRACTORS SHALL VERIFY AND BE RESPONSIBLE FOR ALL DIMENSIONS AND CONDITIONS ON THE JOB AND THIS OFFICE MUST BE NOTIFIED OF ANY VARIATION FROM THE DIMENSIONS AND CONDITIONS SHOWN BY THESE DRAWINGS. WARNING: REPRODUCTION HEREOF IS A CRIMINAL OFFENSE UNDER 18 U.S.C. SEC. 506. UNAUTHORIZED DISCLOSURE MAY CONSTITUTE TRADE SECRET MISAPPROPRIATION IN VIOLATION OF 12-24-2-311.1 ET. SEQ. AND OTHER LAWS.

10/18/2021 4:31:33 PM S:\ajc users\taylor\Revit Local Files\21 0928 - 1877 - Dumke Womens Gymnastics Facility V20_detached_taylorUv5V2.rvt

1 2 3 4 5

D

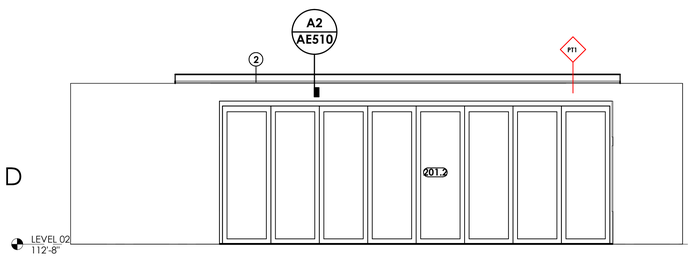

D1 INT. ELEV. - RM 201 EAST
1/4" = 1'-0"

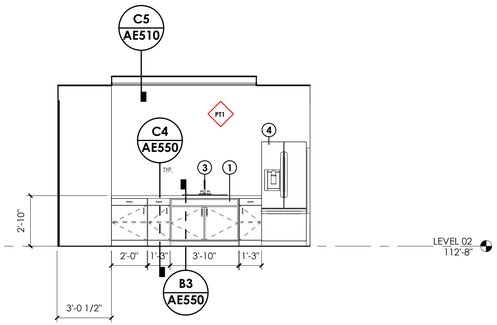

D3 INT. ELEV. - RM 201 NORTH
1/4" = 1'-0"

C

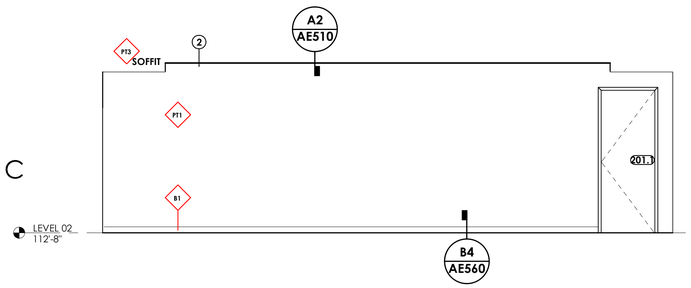

C1 INT. ELEV. - RM 201 WEST
1/4" = 1'-0"

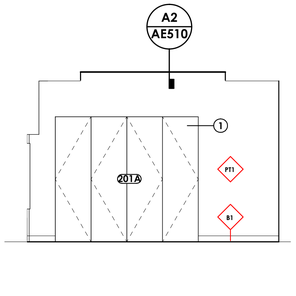

C3 INT. ELEV. - RM 201 SOUTH
1/4" = 1'-0"

B

A



A1 INT. ELEV. - RM 215 EAST
1/4" = 1'-0"

A2 INT. ELEV. - RM 215 NORTH
1/4" = 1'-0"

A3 INT. ELEV. - RM 215 SOUTH
1/4" = 1'-0"

A5 INT. ELEV. - RM 215 WEST
1/4" = 1'-0"

1 2 3 4 5

GENERAL NOTES:

- SEE SHEET GI003 FOR GENERAL NOTES LEGENDS AND ABBREVIATIONS.
- SEE GI002 FOR DRAWING INDEX.
- DO NOT SCALE DRAWINGS.
- CONTRACTOR / SUBCONTRACTOR SHALL VERIFY ALL DIMENSIONS AND CONDITIONS BEFORE BEGINNING WORK, AND SHALL REPORT TO THE ARCHITECT ANY ERRORS, INCONSISTENCIES OR OMISSIONS BEFORE BEGINNING WORK. SEE GENERAL NOTES AND SPECIFICATIONS.

KEYED NOTES:

1 P-LAM CABINET DOOR, SEE FINISH LEGEND
2 WOOD CEILING PANEL. SEE FINISH LEGEND.COORDINATE STYLE WITH OWNER AND ARCHITECT.
3 SINK AND FAUCET, SEE PLUMBING DRAWINGS.
4 REFRIGERATOR.NOT IN CONTRACT.

ARCHITECT 1877
ajc architects
703 east 1700 south
salt lake city, utah 84105
ph: 801.466.8818
fx: 801.466.4411
www.ajcarchitects.com

ARCHITECT / CONSULTANT

STATE OF UTAH
KENT R. RIGBY
No. 135090
05.18.2020
LICENSED ARCHITECT

OWNER INFORMATION

PROJECT DESCRIPTION

DUMKE GYMNASTICS TRAINING CENTER
1825 E. SOUTH CAMPUS DRIVE
SALT LAKE CITY, UT 84112

AHJ STAMP

SHEET NAME:
INTERIOR ELEVATIONS

REVISIONS

MARK	DATE	DESCRIPTION

ISSUE DATA

ISSUE DATE:	10.18.21
ISSUE TYPE:	CD
DRAWN BY:	AT|DG
CHECKED BY:	KR
PROJECT#:	1877

SHEET NUMBER:
AE413

ALL IDEAS, DESIGNS, ARRANGEMENTS AND PLANS INDICATED OR REPRESENTED BY THIS DRAWING ARE OWNED BY AND THE PROPERTY OF AJC ARCHITECTS PC AND WERE CREATED, EVOLVED, AND DEVELOPED FOR USE ON AND IN CONNECTION WITH THE SPECIFIED PROJECT. NONE OF THE IDEAS, DESIGNS, ARRANGEMENTS OR PLANS SHALL BE USED BY OR DISCLOSED TO ANY PERSON, FIRM, OR CORPORATION FOR ANY PURPOSE WHATSOEVER WITHOUT WRITTEN CONSENT OF AJC ARCHITECTS PC. WRITTEN DIMENSIONS ON THESE DRAWINGS SHALL HAVE PRECEDENCE OVER SCALE DIMENSIONS. CONTRACTORS SHALL VERIFY AND BE RESPONSIBLE FOR ALL DIMENSIONS AND CONDITIONS ON THE JOB AND THIS OFFICE MUST BE NOTIFIED OF ANY VARIATION FROM THE DIMENSIONS AND CONDITIONS SHOWN BY THESE DRAWINGS. WARNING: REPRODUCTION HEREOF IS A CRIMINAL OFFENSE UNDER 18 U.S.C. 506. UNAUTHORIZED DISCLOSURE MAY CONSTITUTE TRADE SECRET MISAPPROPRIATION IN VIOLATION OF 17 C.24.2-311.1 ET. SEQ. AND OTHER LAWS.

10/18/2021 4:31:37 PM S:\ajc users\taylor\Revit Local Files\21 0928 - 1877 - Dumke Womens Gymnastics Facility V20_detached_ataylorUv5V2.rvt

GENERAL NOTES:

- SEE SHEET GI003 FOR GENERAL NOTES LEGENDS AND ABBREVIATIONS.
- SEE GI002 FOR DRAWING INDEX.
- DO NOT SCALE DRAWINGS.
- CONTRACTOR / SUBCONTRACTOR SHALL VERIFY ALL DIMENSIONS AND CONDITIONS BEFORE BEGINNING WORK, AND SHALL REPORT TO THE ARCHITECT ANY ERRORS, INCONSISTENCIES OR OMISSIONS BEFORE BEGINNING WORK. SEE GENERAL NOTES AND SPECIFICATIONS.

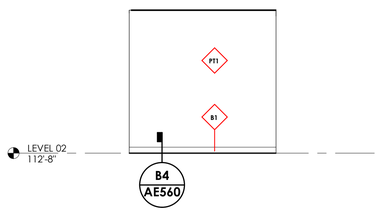

D1 INT. ELEV. - RM 213 EAST
1/4" = 1'-0"

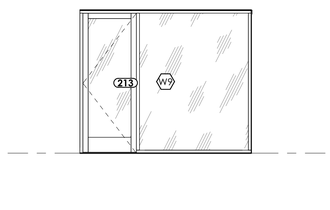

D2 INT. ELEV. - RM 213 NORTH
1/4" = 1'-0"

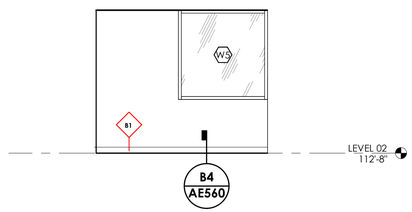

D3 INT. ELEV. - RM 213 SOUTH
1/4" = 1'-0"

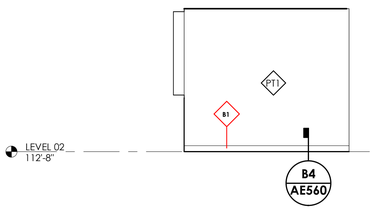

C1 INT. ELEV. - RM 213 WEST
1/4" = 1'-0"

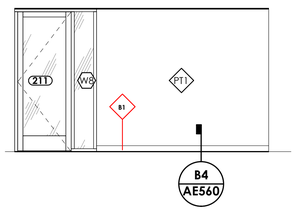

C2 INT. ELEV. - RM 211 EAST
1/4" = 1'-0"

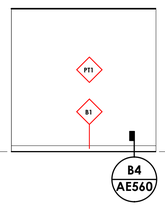

C3 INT. ELEV. - RM 211 NORTH
1/4" = 1'-0"

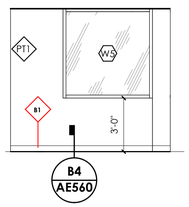

C5 INT. ELEV. - RM 211 SOUTH
1/4" = 1'-0"

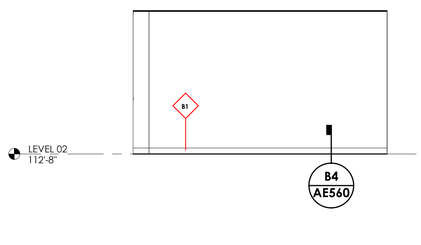

B1 INT. ELEV. - RM 211 WEST
1/4" = 1'-0"

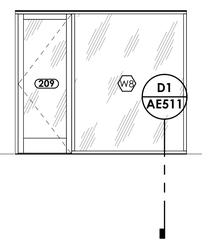

B2 INT. ELEV. - RM 209 EAST
1/4" = 1'-0"

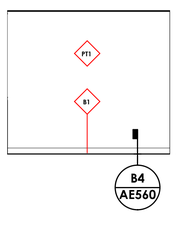

B3 INT. ELEV. - RM 209 NORTH
1/4" = 1'-0"

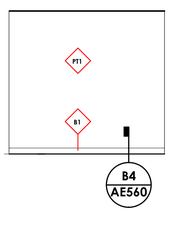

B4 INT. ELEV. - RM 209 SOUTH
1/4" = 1'-0"

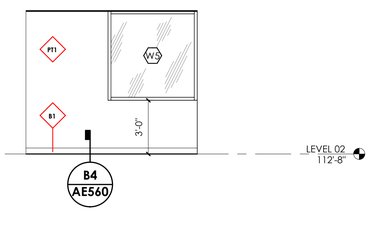

B5 INT. ELEV. - RM 209 WEST
1/4" = 1'-0"

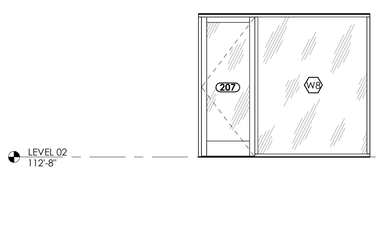

A1 INT. ELEV. - RM 207 EAST
1/4" = 1'-0"

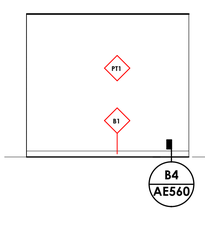

A2 INT. ELEV. - RM 207 NORTH
1/4" = 1'-0"

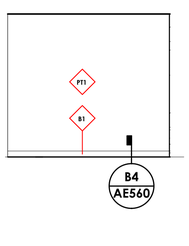

A3 INT. ELEV. - RM 207 SOUTH
1/4" = 1'-0"

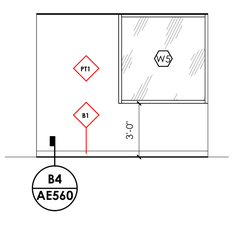

A5 INT. ELEV. - RM 207 WEST
1/4" = 1'-0"

1 2 3 4 5

ARCHITECT 1877

ajc architects
703 east 1700 south
salt lake city, utah 84105
ph: 801.466.8818
fx: 801.466.4411
www.ajcarchitects.com

ARCHITECT / CONSULTANT

STATE OF UTAH
KENT B. RIGBY
No. 135090
05.18.2020
LICENSED ARCHITECT

OWNER INFORMATION

PROJECT DESCRIPTION

DUMKE GYMNASTICS TRAINING CENTER
1825 E. SOUTH CAMPUS DRIVE
SALT LAKE CITY, UT 84112

AHJ STAMP

SHEET NAME:
INTERIOR ELEVATIONS

REVISIONS

MARK	DATE	DESCRIPTION

ISSUE DATA

ISSUE DATE:	10.18.21
ISSUE TYPE:	CD
DRAWN BY:	AT|DG
CHECKED BY:	KR
PROJECT#:	1877

SHEET NUMBER:
AE414

ALL IDEAS, DESIGNS, ARRANGEMENTS AND PLANS INDICATED OR REPRESENTED BY THIS DRAWING ARE OWNED BY, AND THE PROPERTY OF, AJC ARCHITECTS PC, AND WERE CREATED, EVOLVED, AND DEVELOPED FOR USE ON AND IN CONNECTION WITH THE SPECIFIED PROJECT. NONE OF THE IDEAS, DESIGNS, ARRANGEMENTS OR PLANS SHALL BE USED BY OR DISCLOSED TO ANY PERSON, FIRM, OR CORPORATION FOR ANY PURPOSE WHATSOEVER WITHOUT WRITTEN CONSENT OF AJC ARCHITECTS PC. WRITTEN DIMENSIONS ON THESE DRAWINGS SHALL HAVE PRECEDENCE OVER SCALE DIMENSIONS. CONTRACTORS SHALL VERIFY AND BE RESPONSIBLE FOR ALL DIMENSIONS AND CONDITIONS ON THE JOB AND THIS OFFICE MUST BE NOTIFIED OF ANY VARIATION FROM THE DIMENSIONS AND CONDITIONS SHOWN BY THESE DRAWINGS. WARNING: REPRODUCTION HEREOF IS A CRIMINAL OFFENSE UNDER 18 U.S.C. 506. UNAUTHORIZED DISCLOSURE MAY CONSTITUTE TRADE SECRET MISAPPROPRIATION IN VIOLATION OF 17 C.F.R. 240.10b-5.1, 17 U.S.C. 1832, AND OTHER LAWS.

10/18/2021 4:31:41 PM S:\ajc users\taylor\Revit Local Files\21 0928 - 1877 - Dumke Womens Gymnastics Facility V20_detached_ataylorUv5V2.rvt

1 2 3 4 5

GENERAL NOTES:

- SEE SHEET GI003 FOR GENERAL NOTES LEGENDS AND ABBREVIATIONS.
- SEE GI002 FOR DRAWING INDEX.
- DO NOT SCALE DRAWINGS.
- CONTRACTOR / SUBCONTRACTOR SHALL VERIFY ALL DIMENSIONS AND CONDITIONS BEFORE BEGINNING WORK, AND SHALL REPORT TO THE ARCHITECT ANY ERRORS, INCONSISTENCIES OR OMISSIONS BEFORE BEGINNING WORK. SEE GENERAL NOTES AND SPECIFICATIONS.

KEYED NOTES:

1 FIRE EXTINGUISHER
2 EXISTING STEEL COLUMN TO REMAIN. PROTECT. PAINT.

D



D1 INT. ELEV. - RM 205 EAST
1/4" = 1'-0"

D2 INT. ELEV. - RM 205 NORTH
1/4" = 1'-0"

C

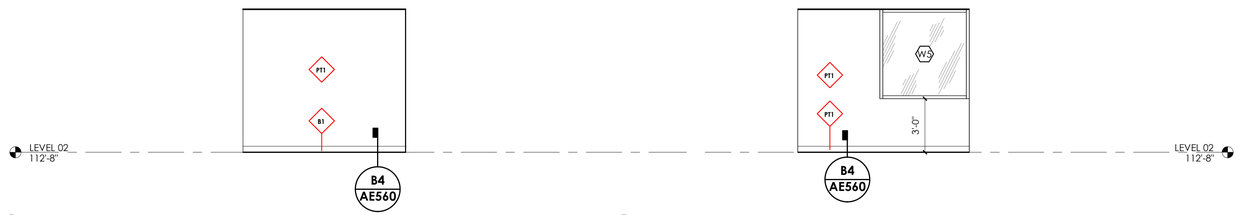

C1 INT. ELEV. - RM 205 SOUTH
1/4" = 1'-0"

C2 INT. ELEV. - RM 205 WEST
1/4" = 1'-0"

B

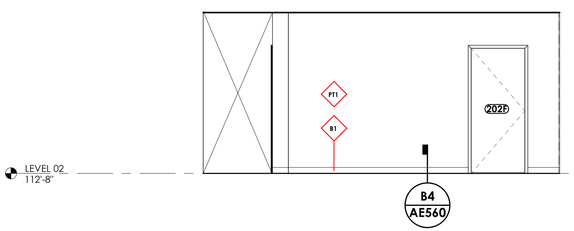

B1 INT. ELEV. - RM 202 NORTH
1/4" = 1'-0"

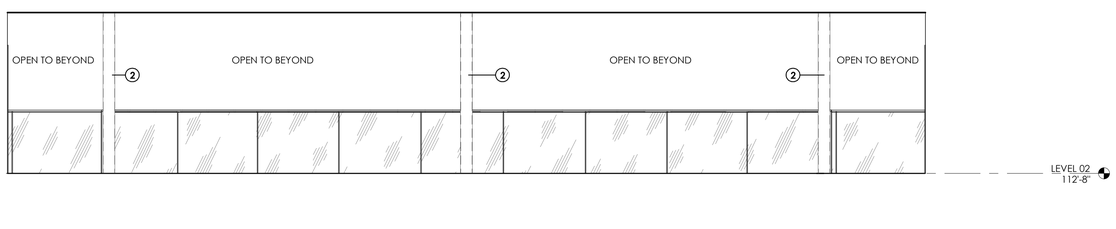

B3 INT. ELEV. - RM 202 EAST
1/4" = 1'-0"

A

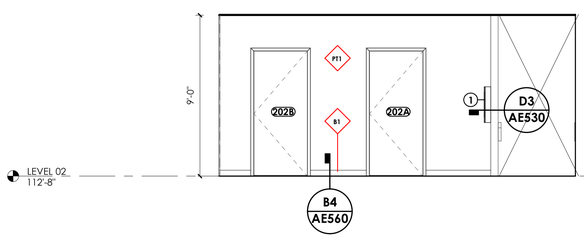

A1 INT. ELEV. - RM 202 SOUTH
1/4" = 1'-0"

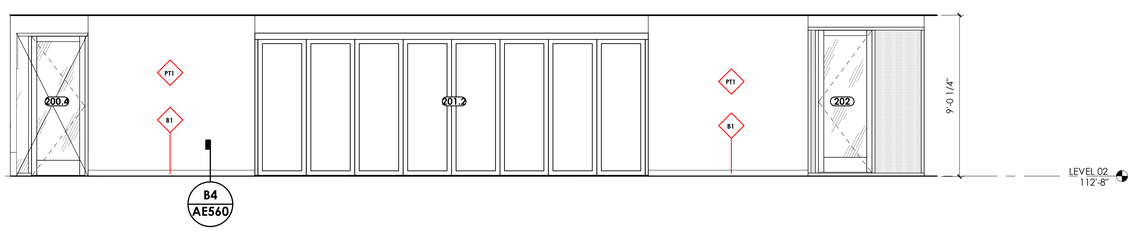

A3 INT. ELEV. - RM 202 WEST
1/4" = 1'-0"

1 2 3 4 5

ARCHITECT 1877

ajc architects

703 east 1700 south
salt lake city, utah 84105
ph: 801.466.8818
fx: 801.466.4411
www.ajcarchitects.com

ARCHITECT / CONSULTANT

STATE OF UTAH
KENT B. RIGBY
No. 135090
05.18.2020
LICENSED ARCHITECT

OWNER INFORMATION

PROJECT DESCRIPTION

DUMKE GYMNASTICS TRAINING CENTER

1825 E. SOUTH CAMPUS DRIVE
SALT LAKE CITY, UT 84112

AHJ STAMP

SHEET NAME:

INTERIOR ELEVATIONS

REVISIONS

MARK	DATE	DESCRIPTION

ISSUE DATA

ISSUE DATE:	10.18.21
ISSUE TYPE:	CD
DRAWN BY:	AT|DG
CHECKED BY:	KR
PROJECT#:	1877

SHEET NUMBER:

AE415

GENERAL NOTES:

- SEE SHEET GI003 FOR GENERAL NOTES LEGENDS AND ABBREVIATIONS.
- SEE GI002 FOR DRAWING INDEX.
- DO NOT SCALE DRAWINGS.
- CONTRACTOR / SUBCONTRACTOR SHALL VERIFY ALL DIMENSIONS AND CONDITIONS BEFORE BEGINNING WORK, AND SHALL REPORT TO THE ARCHITECT ANY ERRORS, INCONSISTENCIES OR OMISSIONS BEFORE BEGINNING WORK. SEE GENERAL NOTES AND SPECIFICATIONS.

KEYED NOTES:

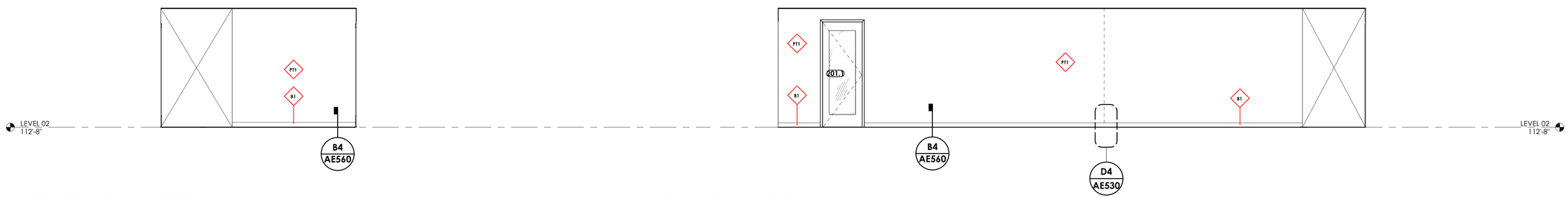

C1 INT. ELEV. - RM 20 NORTH
1/4" = 1'-0"

C3 INT. ELEV. - RM 200 EAST
1/4" = 1'-0"

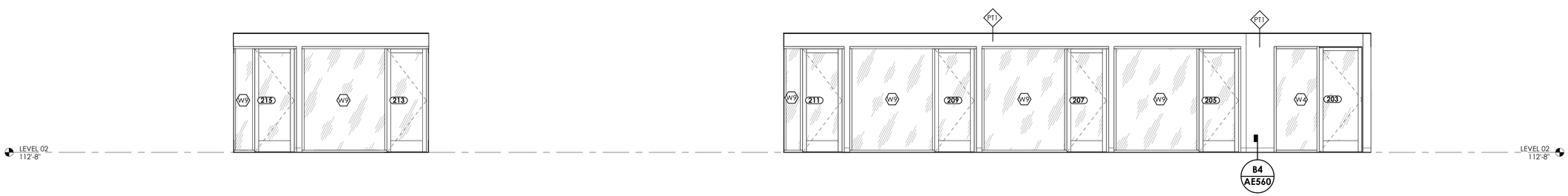

B1 INT. ELEV. - RM 200 SOUTH
1/4" = 1'-0"

B3 INT. ELEV. - RM 200 WEST
1/4" = 1'-0"

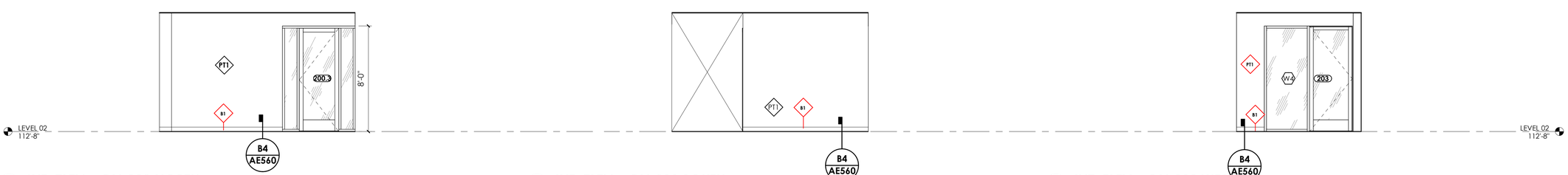

A1 INT. ELEV. - RM 203 NORTH
1/4" = 1'-0"

A3 INT. ELEV. - RM 203 SOUTH
1/4" = 1'-0"

A5 INT. ELEV. - RM 203 WEST
1/4" = 1'-0"

ARCHITECT 1877
ajc architects
703 east 1700 south
salt lake city, utah 84105
ph: 801.466.8818
fx: 801.466.4411
www.ajcarchitects.com

ARCHITECT / CONSULTANT

STATE OF UTAH
KENT R. RIGBY
No. 135096
05.18.2020
LICENSED ARCHITECT

OWNER INFORMATION

PROJECT DESCRIPTION

DUMKE GYMNASTICS TRAINING CENTER

1825 E. SOUTH CAMPUS DRIVE
SALT LAKE CITY, UT 84112

AHJ STAMP

SHEET NAME:

INTERIOR ELEVATIONS

REVISIONS

MARK	DATE	DESCRIPTION

ISSUE DATA

ISSUE DATE:	10.18.21
ISSUE TYPE:	CD
DRAWN BY:	AT|DG
CHECKED BY:	KR
PROJECT#:	1877

SHEET NUMBER:

AE416

10/18/2021 4:31:44 PM S:\ajc users\ataylor\Revit Local Files\21 0928 - 1877 - Dumke Womens Gymnastics Facility V20_detached_ataylorUV5V2.rvt
ALL IDEAS, DESIGNS, ARRANGEMENTS AND PLANS INDICATED OR REPRESENTED BY THIS DRAWING ARE OWNED BY AND THE PROPERTY OF AJC ARCHITECTS PC AND WERE CREATED, EVOLVED, AND DEVELOPED FOR USE ON AND IN CONNECTION WITH THE SPECIFIED PROJECT. NONE OF THE IDEAS, DESIGNS, ARRANGEMENTS OR PLANS SHALL BE USED BY OR DISCLOSED TO ANY PERSON, FIRM, OR CORPORATION FOR ANY PURPOSE WHATSOEVER WITHOUT WRITTEN CONSENT OF AJC ARCHITECTS PC. WRITTEN DIMENSIONS ON THESE DRAWINGS SHALL HAVE PRECEDENCE OVER SCALE DIMENSIONS. CONTRACTORS SHALL VERIFY AND BE RESPONSIBLE FOR ALL DIMENSIONS AND CONDITIONS ON THE JOB AND THIS OFFICE MUST BE NOTIFIED OF ANY VARIATION FROM THE DIMENSIONS AND CONDITIONS SHOWN BY THESE DRAWINGS. WARNING: REPRODUCTION HEREOF IS A CRIMINAL OFFENSE UNDER 18 U.S.C. SEC. 506. UNAUTHORIZED DISCLOSURE MAY CONSTITUTE TRADE SECRET MISAPPROPRIATION IN VIOLATION OF I.C.2.4-2-3.1-1 ET. SEQ. AND OTHER LAWS.

10/18/2021 4:31:49 PM S:\ajc users\taylor\Revit Local Files\21 0928 - 1877 - Dumke Womens Gymnastics Facility V20_detached_atayloUV5V2.rvt

ALL IDEAS, DESIGNS, ARRANGEMENTS AND PLANS INDICATED OR REPRESENTED BY THIS DRAWING ARE OWNED BY AND THE PROPERTY OF AJC ARCHITECTS PC AND WERE CREATED, EVOLVED, AND DEVELOPED FOR USE ON AND IN CONNECTION WITH THE SPECIFIED PROJECT. NONE OF THE IDEAS, DESIGNS, ARRANGEMENTS OR PLANS SHALL BE USED BY OR DISCLOSED TO ANY PERSON, FIRM, OR CORPORATION FOR ANY PURPOSE WHATSOEVER WITHOUT WRITTEN CONSENT OF AJC ARCHITECTS PC. WRITTEN DIMENSIONS ON THESE DRAWINGS SHALL HAVE PRECEDENCE OVER SCALE DIMENSIONS. CONTRACTORS SHALL VERIFY AND BE RESPONSIBLE FOR ALL DIMENSIONS AND CONDITIONS ON THE JOB AND THIS OFFICE MUST BE NOTIFIED OF ANY VARIATION FROM THE DIMENSIONS AND CONDITIONS SHOWN BY THESE DRAWINGS. WARNING: REPRODUCTION HEREOF IS A CRIMINAL OFFENSE UNDER 18 U.S.C. 506. UNAUTHORIZED DISCLOSURE MAY CONSTITUTE TRADE SECRET MISAPPROPRIATION IN VIOLATION OF 17 U.C.24-2-311.1 ET. SEQ. AND OTHER LAWS.

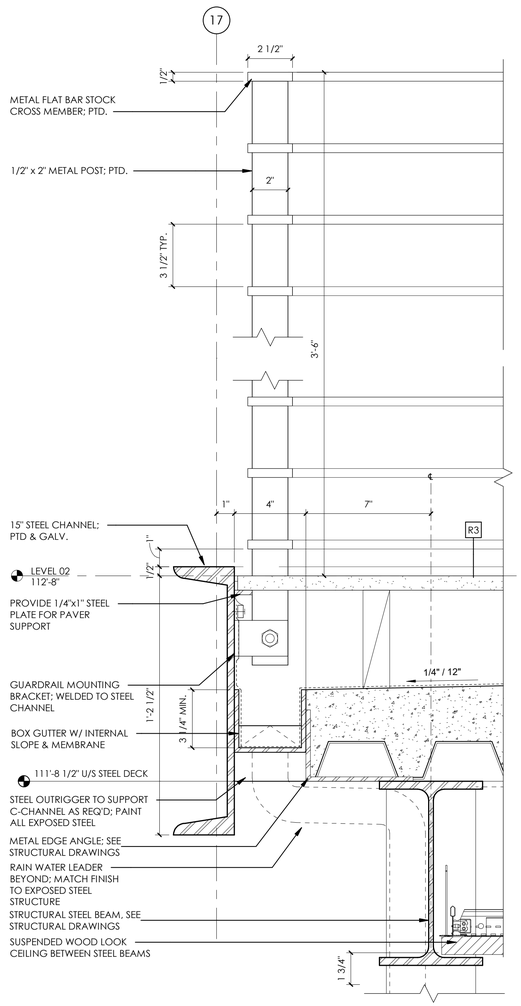

B1 BALCONY DECK @ GUTTER
3" = 1'-0"

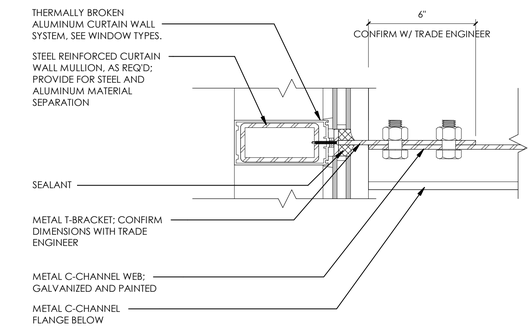

C2 ENTRY CANOPY - REINFORCED MULLION
3" = 1'-0"

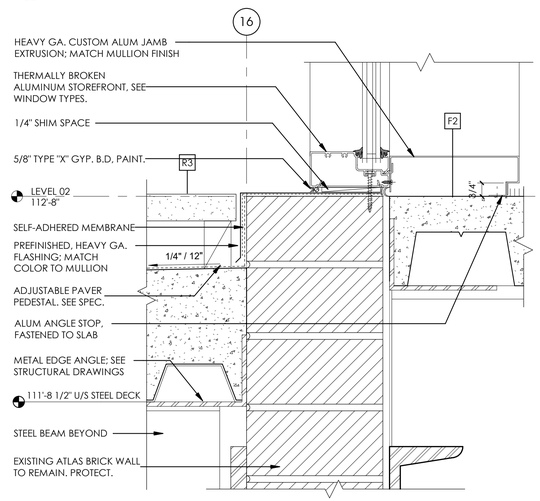

B2 BALCONY DECK @ WINDOW SILL
3" = 1'-0"

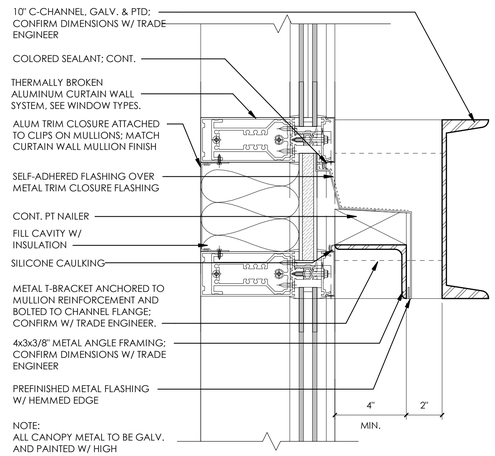

C3 ENTRY CANOPY - SECTION @ CANOPY
3" = 1'-0"

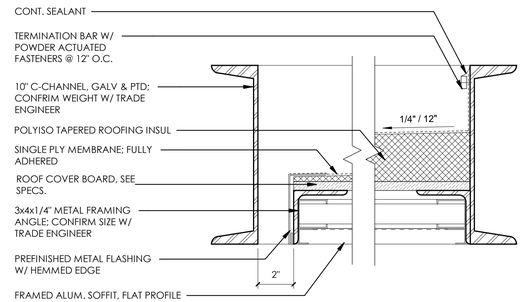

C4 ENTRY CANOPY - TANSVERSE SECTION
3" = 1'-0"

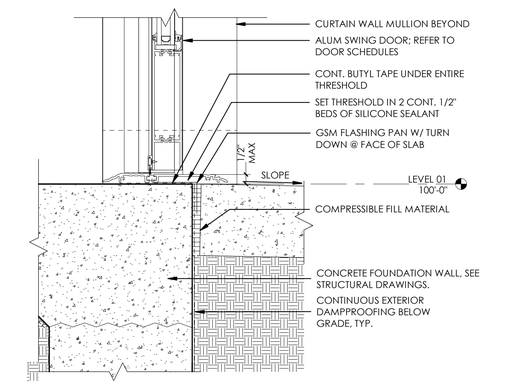

A1 DOOR - MAIN ENTRY THRESHOLD
3" = 1'-0"

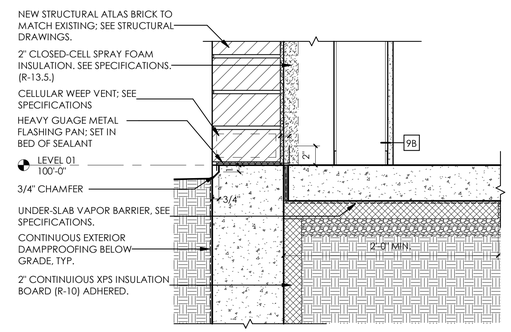

A2 FOUNDATION @ NEW STRUCTURAL BRICK WALL
1 1/2" = 1'-0"

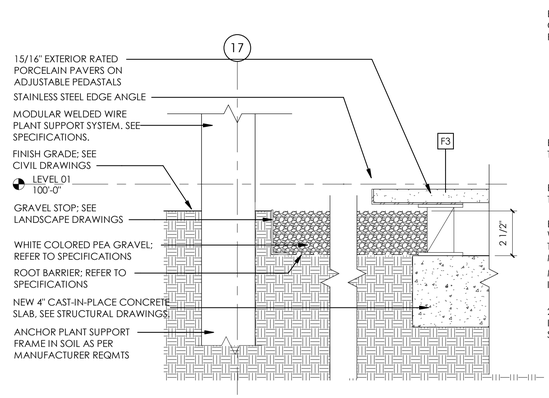

A3 FOUNDATION @ VEGITATED WALL
3" = 1'-0"

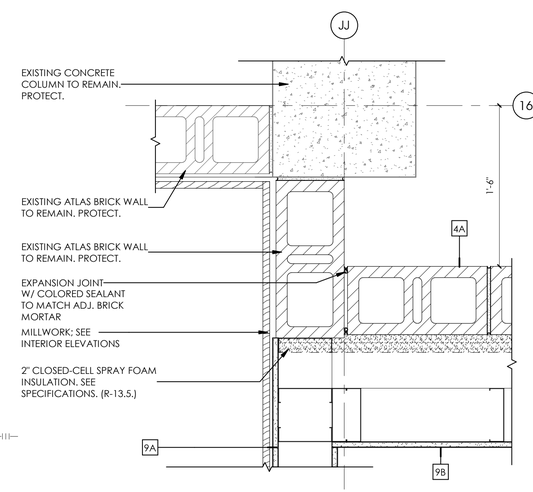

A4 WALL - EXISTING / ADDITION CORNER
1 1/2" = 1'-0"

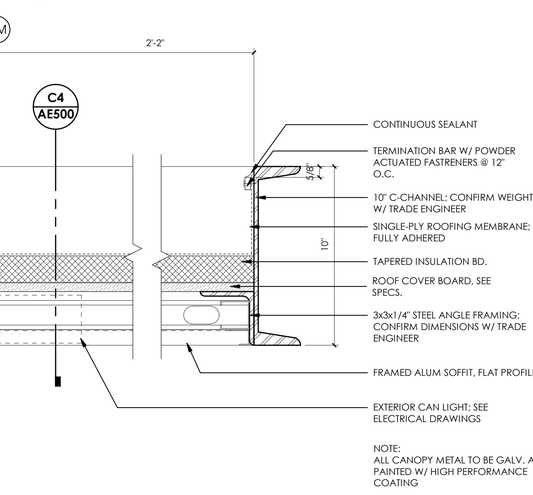

ARCHITECT 1877

ajc architects

703 east 1700 south
salt lake city, utah 84105
ph: 801.466.8818
fx: 801.466.4411
www.ajcarchitects.com

ARCHITECT / CONSULTANT

STATE OF UTAH
KENT B. RIGBY
No. 135090
05.18.2020
LICENSED ARCHITECT

OWNER INFORMATION

PROJECT DESCRIPTION

DUMKE GYMNASTICS TRAINING CENTER

1825 E. SOUTH CAMPUS DRIVE
SALT LAKE CITY, UT 84112

AHJ STAMP

SHEET NAME:

DETAILS

REVISIONS

MARK	DATE	DESCRIPTION

ISSUE DATA

ISSUE DATE:	10.18.21
ISSUE TYPE:	CD
DRAWN BY:	AT|DG
CHECKED BY:	KR
PROJECT#:	1877

SHEET NUMBER:

AE500

ALL IDEAS, DESIGNS, ARRANGEMENTS AND PLANS INDICATED OR REPRESENTED BY THIS DRAWING ARE OWNED BY, AND THE PROPERTY OF, AJC ARCHITECTS PC, AND WERE CREATED, EVOLVED, AND DEVELOPED FOR USE ON, AND IN CONNECTION WITH, THE SPECIFIED PROJECT. NONE OF THE IDEAS, DESIGNS, ARRANGEMENTS OR PLANS SHALL BE USED BY OR DISCLOSED TO ANY PERSON, FIRM, OR CORPORATION FOR ANY PURPOSE WHATSOEVER WITHOUT WRITTEN CONSENT OF AJC ARCHITECTS PC. WRITTEN DIMENSIONS ON THESE DRAWINGS SHALL HAVE PRECEDENCE OVER SCALE DIMENSIONS. CONTRACTORS SHALL VERIFY AND BE RESPONSIBLE FOR ALL DIMENSIONS AND CONDITIONS ON THE JOB AND THIS OFFICE MUST BE NOTIFIED OF ANY VARIATION FROM THE DIMENSIONS AND CONDITIONS SHOWN BY THESE DRAWINGS. WARNING: REPRODUCTION HEREOF IS A CRIMINAL OFFENSE UNDER 18 U.S.C. SEC. 506. UNAUTHORIZED DISCLOSURE MAY CONSTITUTE TRADE SECRET MISAPPROPRIATION IN VIOLATION OF 17-24.2-311.1 ET. SEQ. AND OTHER LAWS.

10/18/2021 4:31:52 PM S:\ajc users\taylor\Revit Local Files\21 0928 - 1877 - Dumke Womens Gymnastics Facility V20_detached_taylorUv5V2.rvt

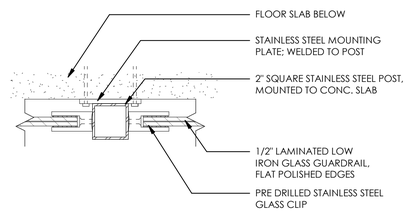

C2 GLASS GUARDRAIL POST DETAIL AT OBSERVATION DECK
3" = 1'-0"

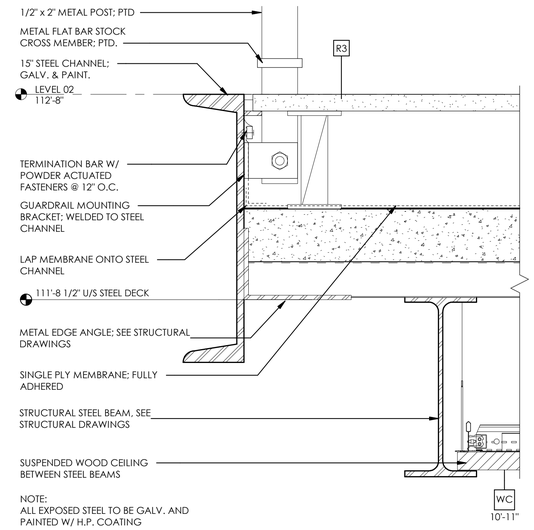

B3 BALCONY DECK @ N/S EDGE
3" = 1'-0"

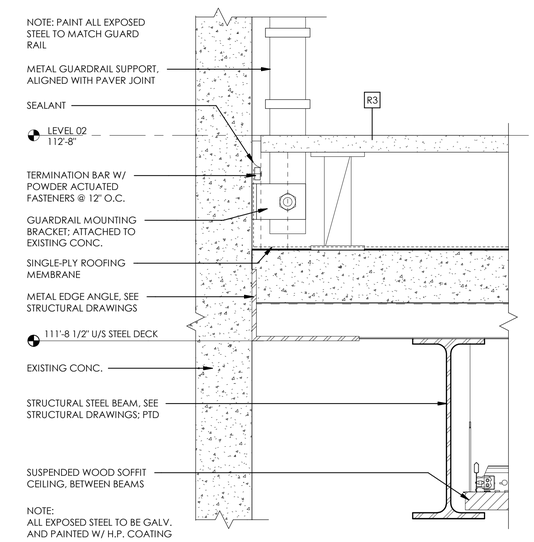

C4 BALCONY DECK @ EXISTING CONC.
3" = 1'-0"

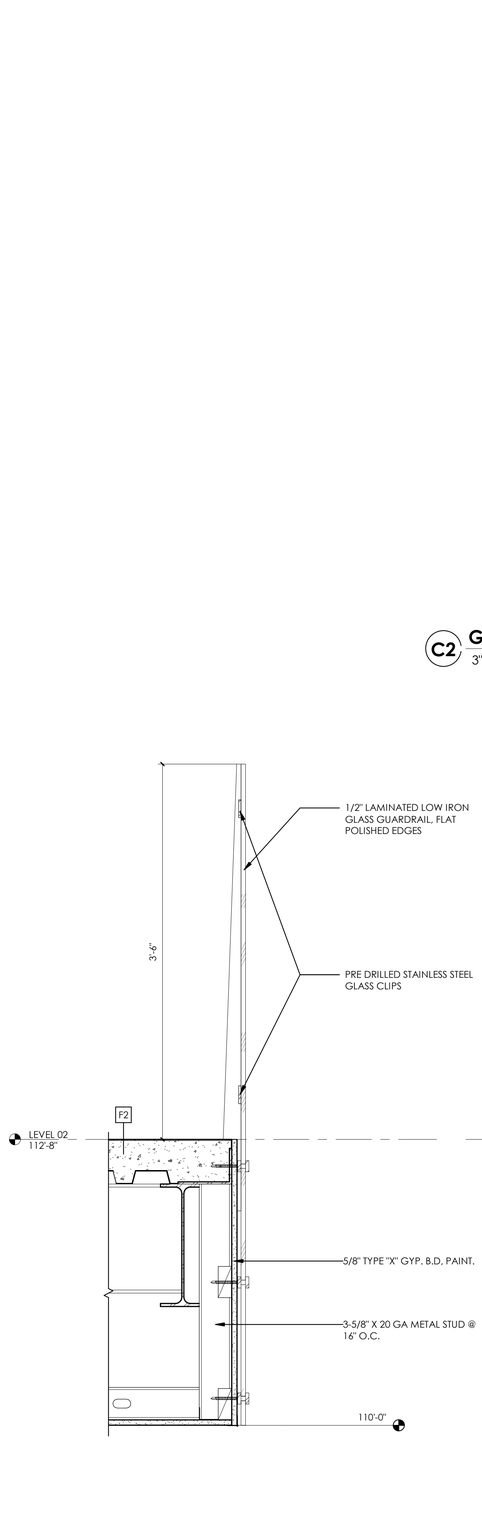

A1 DETAIL - GLASS GUARDRAIL
1 1/2" = 1'-0"

A2 DETAIL - GLASS GUARDRAIL AT OBSERVATION DECK
1 1/2" = 1'-0"

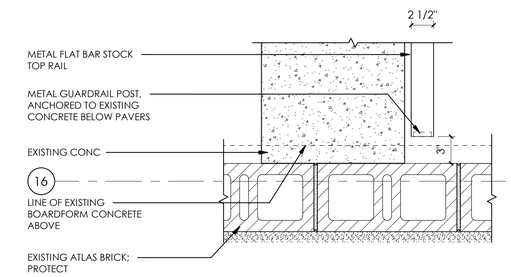

B4 BALCONY RAILING TERMINATION
1 1/2" = 1'-0"

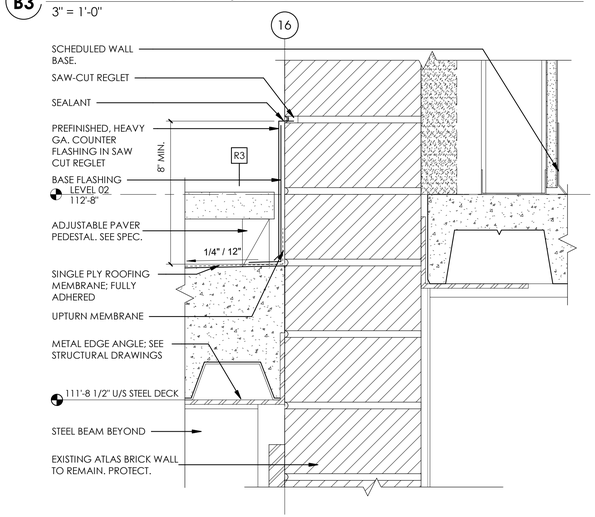

A3 BALCONY DECK @ EXISTING BRICK
3" = 1'-0"

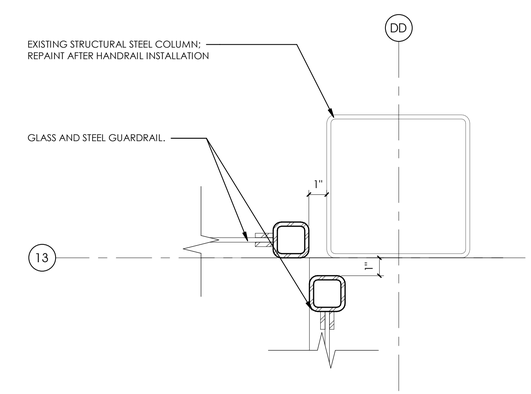

A4 DETAIL - ADD ALT # 3 RAILING DETAIL
3" = 1'-0"

1 2 3 4 5

ARCHITECT 1877

ajc architects
703 east 1700 south
salt lake city, utah 84105
ph: 801.466.8818
fx: 801.466.4411
www.ajcarchitects.com

ARCHITECT / CONSULTANT

STATE OF UTAH
KENT B. RIGBY
No. 135090
05.18.2020
LICENSED ARCHITECT

OWNER INFORMATION

PROJECT DESCRIPTION

DUMKE GYMNASTICS TRAINING CENTER

1825 E. SOUTH CAMPUS DRIVE
SALT LAKE CITY, UT 84112

AHJ STAMP

SHEET NAME:
DETAILS

REVISIONS

MARK	DATE	DESCRIPTION

ISSUE DATA

ISSUE DATE:	10.18.21
ISSUE TYPE:	CD
DRAWN BY:	AT|DG
CHECKED BY:	KR
PROJECT#:	1877

SHEET NUMBER:
AE501

ALL IDEAS, DESIGNS, ARRANGEMENTS, AND PLANS INDICATED OR REPRESENTED BY THIS DRAWING ARE OWNED BY, AND THE PROPERTY OF, AJC ARCHITECTS, PC, AND WERE CREATED, EVOLVED, AND DEVELOPED FOR USE ON, AND IN CONNECTION WITH, THE SPECIFIED PROJECT. NONE OF THE IDEAS, DESIGNS, ARRANGEMENTS OR PLANS SHALL BE USED BY OR DISCLOSED TO ANY PERSON, FIRM, OR CORPORATION FOR ANY PURPOSE WHATSOEVER WITHOUT WRITTEN CONSENT OF AJC ARCHITECTS PC. WRITTEN DIMENSIONS ON THESE DRAWINGS SHALL HAVE PRECEDENCE OVER SCALE DIMENSIONS. CONTRACTORS SHALL VERIFY AND BE RESPONSIBLE FOR ALL DIMENSIONS AND CONDITIONS ON THE JOB AND THIS OFFICE MUST BE NOTIFIED OF ANY VARIATION FROM THE DIMENSIONS AND CONDITIONS SHOWN BY THESE DRAWINGS. WARNING: REPRODUCTION HEREOF IS A CRIMINAL OFFENSE UNDER 18 U.S.C. 506. UNAUTHORIZED DISCLOSURE MAY CONSTITUTE TRADE SECRET MISAPPROPRIATION IN VIOLATION OF 17 U.S.C. § 1301 ET. SEQ. AND OTHER LAWS.

10/18/2021 4:31:56 PM S:\ajc users\taylor\Revit Local Files\21 0928 - 1877 - Dumke Womens Gymnastics Facility V20_detached_taylorUV5V2.rvt

1 2 3 4 5

D

C

B

A

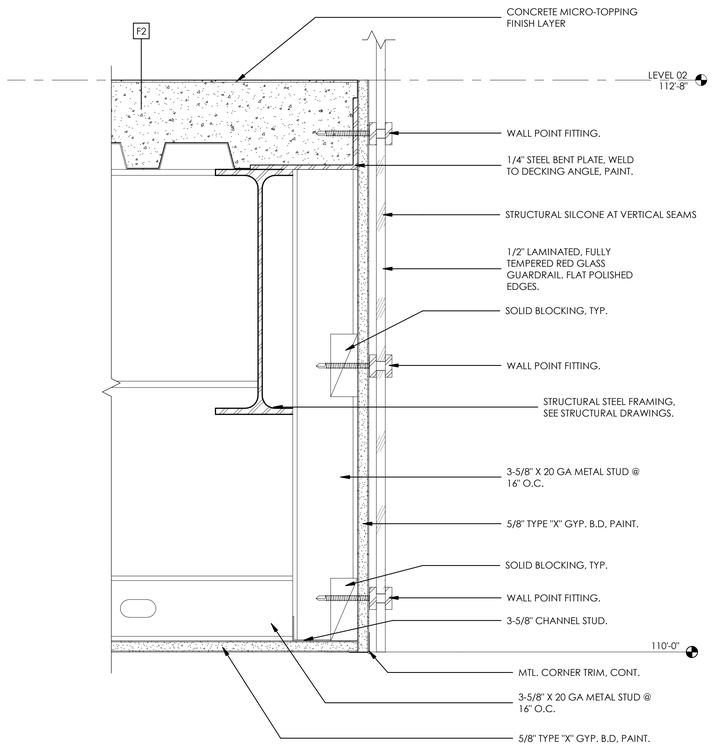

C1 GYP SOFFIT W/ GLASS
3" = 1'-0"

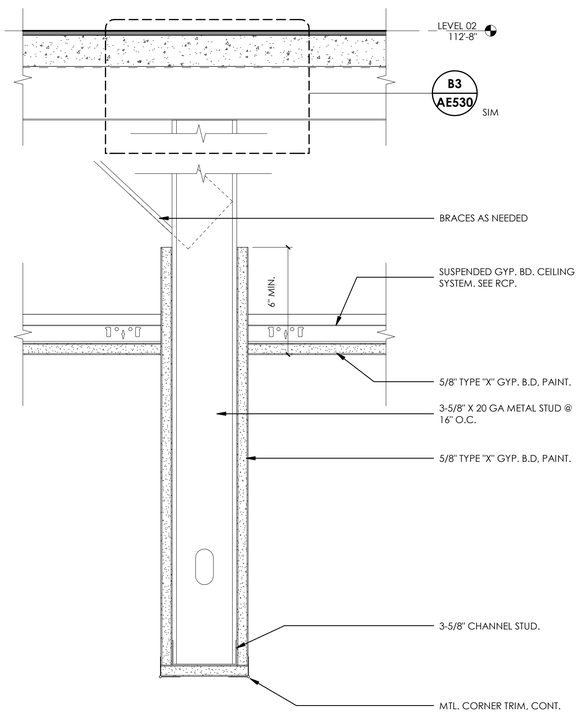

A1 GYP. CEILING @ FRAMED OPENING
3" = 1'-0"

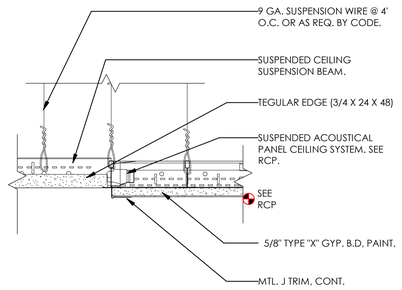

D4 ACOUSTIC TO GYP - FLUSH
3" = 1'-0"

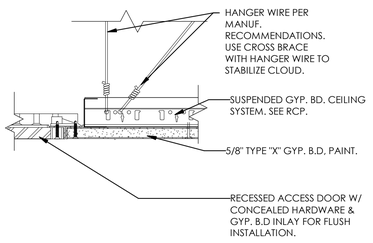

D5 CEILING ACCESS PANEL DETAIL
3" = 1'-0"

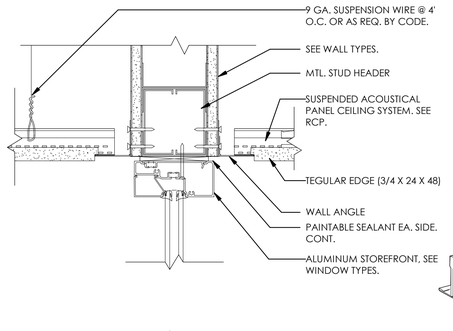

C3 ACOUSTIC TO STOREFRONT
3" = 1'-0"

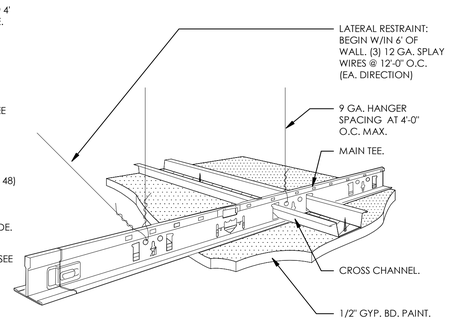

C4 CEILING - SUSPENDED GYP. BD.
3/4" = 1'-0"

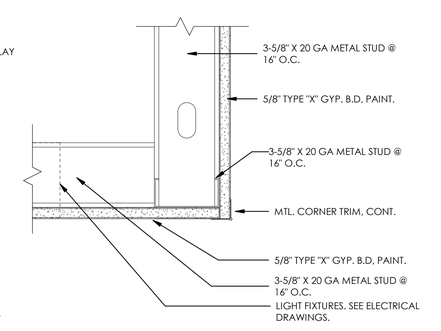

C5 GYP. SOFFIT
3" = 1'-0"

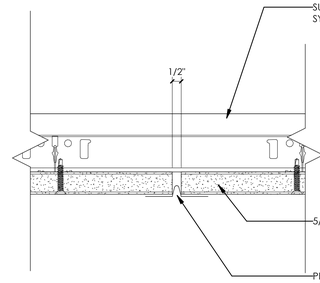

B3 GYP. BD. CEILING CONTROL JOINT
6" = 1'-0"

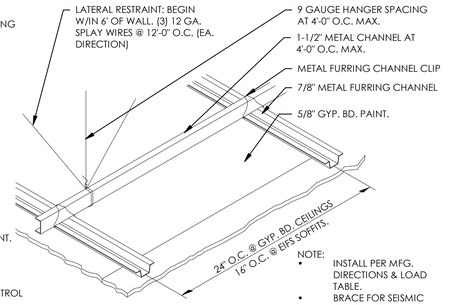

B4 ALT. SUSPENDED CEILING DETAIL
3" = 1'-0"

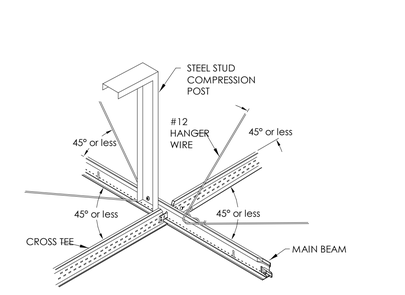

B5 TYP. CEILING BRACING
3" = 1'-0"

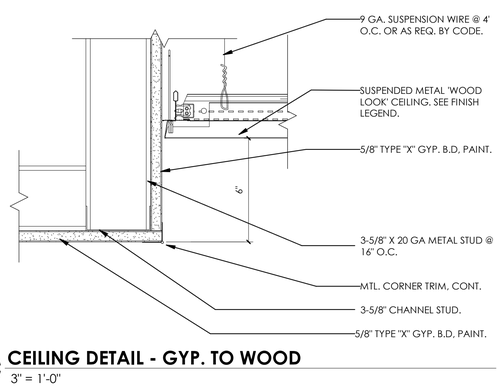

A2 CEILING DETAIL - GYP. TO WOOD
3" = 1'-0"

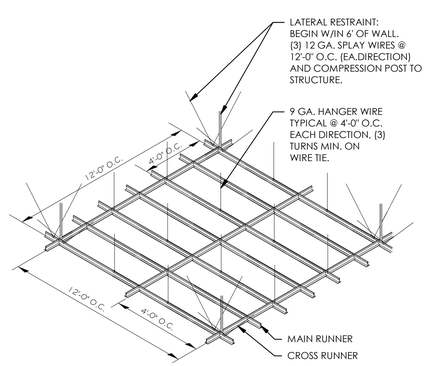

A4 2' x 4' SUSPENDED CEILING BRACING
3" = 1'-0"

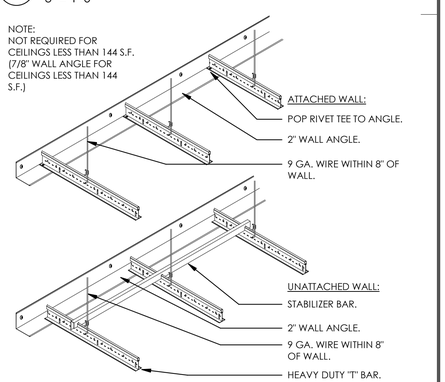

A5 SUSPENDED CEILING DETAIL
3" = 1'-0"

1 2 3 4 5

ARCHITECT 1877
ajc architects
703 east 1700 south
salt lake city, utah 84105
ph: 801.466.8818
fx: 801.466.4411
www.ajcarchitects.com

ARCHITECT / CONSULTANT

STATE OF UTAH
KENT B. RIGBY
No. 135090
05.18.2020
LICENSED ARCHITECT

OWNER INFORMATION

PROJECT DESCRIPTION

DUMKE GYMNASTICS TRAINING CENTER

1825 E. SOUTH CAMPUS DRIVE
SALT LAKE CITY, UT 84112

AHJ STAMP

SHEET NAME:
CEILING DETAILS

REVISIONS

MARK	DATE	DESCRIPTION

ISSUE DATA

ISSUE DATE:	10.18.21
ISSUE TYPE:	CD
DRAWN BY:	AT|DG
CHECKED BY:	KR
PROJECT#:	1877

SHEET NUMBER:
AE510

10/18/2021 4:31:57 PM S:\ajc users\ataylor\Revit Local Files\21 0928 - 1877 - Dumke Womens Gymnastics Facility V20_detached_ataylorUV5V2.rvt

ALL IDEAS, DESIGNS, ARRANGEMENTS AND PLANS INDICATED OR REPRESENTED BY THIS DRAWING ARE OWNED BY AND THE PROPERTY OF AJC ARCHITECTS PC AND WERE CREATED, REVISED, AND DEVELOPED FOR USE ON AND IN CONNECTION WITH THE SPECIFIED PROJECT. NONE OF THE IDEAS, DESIGNS, ARRANGEMENTS OR PLANS INDICATED OR REPRESENTED BY THIS DRAWING MAY BE USED BY OR DISCLOSED TO ANY PERSON, FIRM, OR CORPORATION FOR ANY PURPOSE WHATSOEVER WITHOUT WRITTEN CONSENT OF AJC ARCHITECTS PC. WRITTEN DIMENSIONS ON THESE DRAWINGS SHALL HAVE PRECEDENCE OVER SCALE DIMENSIONS. CONTRACTORS SHALL VERIFY AND BE RESPONSIBLE FOR ALL DIMENSIONS AND CONDITIONS ON THE JOB AND THIS OFFICE MUST BE NOTIFIED OF ANY VARIATION FROM THE DIMENSIONS AND CONDITIONS SHOWN BY THESE DRAWINGS. WARNING: REPRODUCTION HEREOF IS A CRIMINAL OFFENSE UNDER 18 U.S.C. 506. UNAUTHORIZED DISCLOSURE MAY CONSTITUTE TRADE SECRET MISAPPROPRIATION IN VIOLATION OF 17 U.S.C. § 1 ET. SEQ. AND OTHER LAWS.

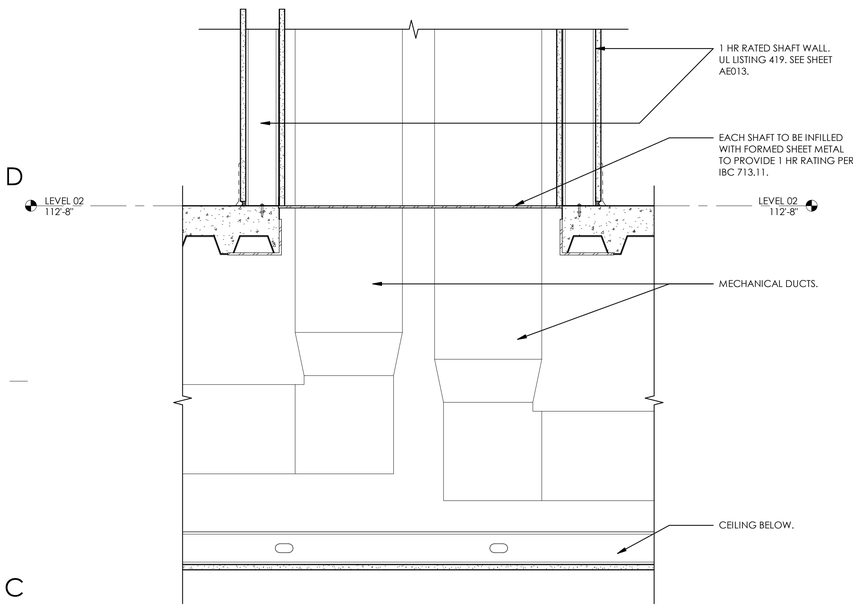

D1 CEILING DETAIL - MECH SHAFT
1 1/2" = 1'-0"

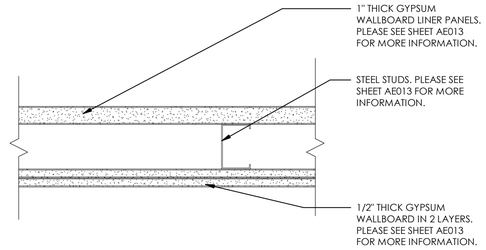

D3 CEILING DETAIL - 1-HR SEPARATION UNDER STAIRS
3" = 1'-0"
1-HOUR FIRE RATED ASSEMBLY : UL - U497

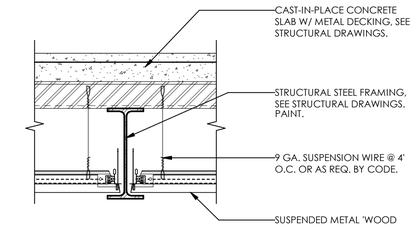

D5 CEILING DETAIL - EXT. METAL SOFFIT
1 1/2" = 1'-0"

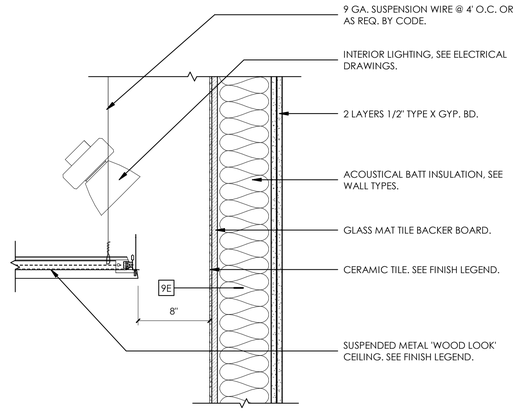

B3 CEILING DETAIL @ ELEVATOR CORE
1 1/2" = 1'-0"

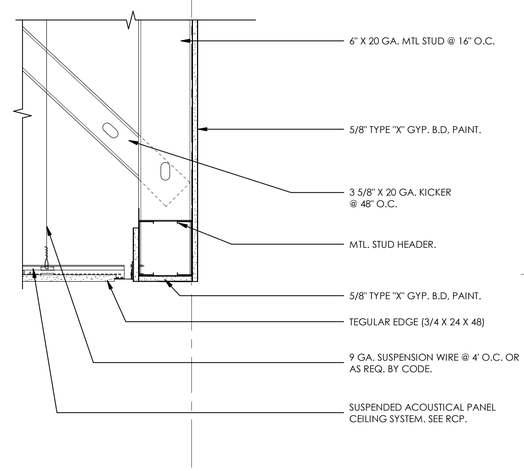

B5 CEILING - ACOUSTIC TO GYP WALL
1 1/2" = 1'-0"

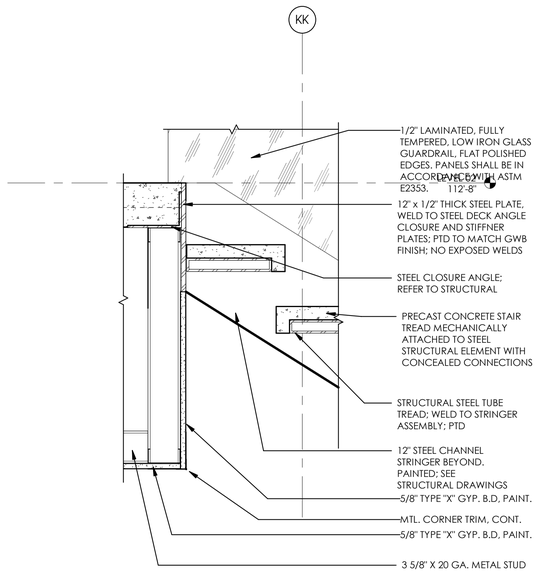

A2 CEILING DETAIL - UNDER STAIR
1 1/2" = 1'-0"

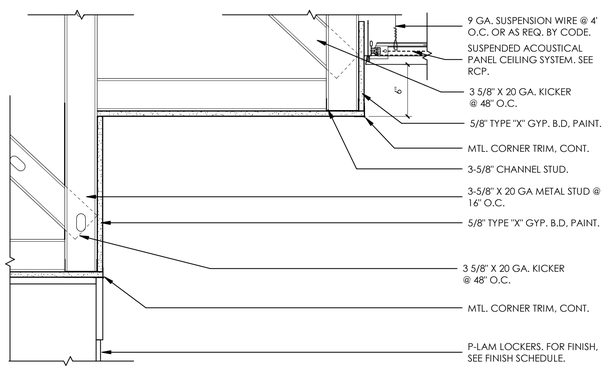

A3 CEILING DETAIL - LOCKER ROOM
1 1/2" = 1'-0"

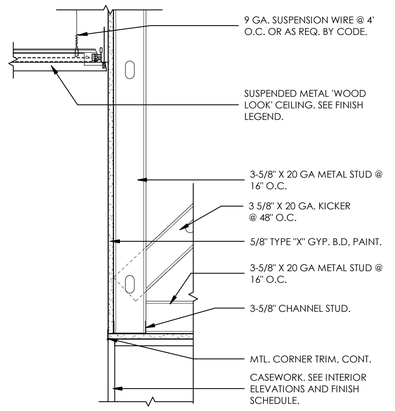

A5 CEILING DETAIL - GYP TO CASEWORK
1 1/2" = 1'-0"

ARCHITECT 1877
ajc architects
703 east 1700 south
salt lake city, utah 84105
ph: 801.466.8818
fx: 801.466.4411
www.ajcarchitects.com

ARCHITECT / CONSULTANT

STATE OF UTAH
KENT B. RIGBY
No. 135090
05.18.2020
LICENSED ARCHITECT

OWNER INFORMATION

PROJECT DESCRIPTION

DUMKE GYMNASTICS TRAINING CENTER

1825 E. SOUTH CAMPUS DRIVE
SALT LAKE CITY, UT 84112

AHJ STAMP

SHEET NAME:
CEILING DETAILS

REVISIONS

MARK	DATE	DESCRIPTION

ISSUE DATA

ISSUE DATE:	10.18.21
ISSUE TYPE:	CD
DRAWN BY:	AT|DG
CHECKED BY:	KR
PROJECT#:	1877

SHEET NUMBER:
AE511

ALL IDEAS, DESIGNS, ARRANGEMENTS AND PLANS INDICATED OR REPRESENTED BY THIS DRAWING ARE OWNED BY AND THE PROPERTY OF AJC ARCHITECTS PC AND WERE CREATED, EVOLVED, AND DEVELOPED FOR USE ON AND IN CONNECTION WITH THE SPECIFIED PROJECT. NONE OF THE IDEAS, DESIGNS, ARRANGEMENTS OR PLANS INDICATED OR REPRESENTED BY THIS DRAWING OR OTHER DOCUMENTS PREPARED BY AJC ARCHITECTS PC MAY BE USED BY OR DISCLOSED TO ANY PERSON, FIRM, OR CORPORATION FOR ANY PURPOSE WHATSOEVER WITHOUT WRITTEN CONSENT OF AJC ARCHITECTS PC. WRITTEN DIMENSIONS ON THESE DRAWINGS SHALL HAVE PRECEDENCE OVER SCALE DIMENSIONS. CONTRACTORS SHALL VERIFY AND BE RESPONSIBLE FOR ALL DIMENSIONS AND CONDITIONS ON THE JOB AND THIS OFFICE MUST BE NOTIFIED OF ANY VARIATION FROM THE DIMENSIONS AND CONDITIONS SHOWN BY THESE DRAWINGS. WARNING - REPRODUCTION HEREOF IS A CRIMINAL OFFENSE UNDER 18 U.S.C. 506. UNAUTHORIZED DISCLOSURE MAY CONSTITUTE TRADE SECRET MISAPPROPRIATION IN VIOLATION OF 17 U.S.C. § 1 ET. SEQ. AND OTHER LAWS.

10/18/2021 4:32:01 PM S:\ajc users\taylor\Revit Local Files\21 0928 - 1877 - Dumke Womens Gymnastics Facility V20_detached_taylorUV5V2.rvt

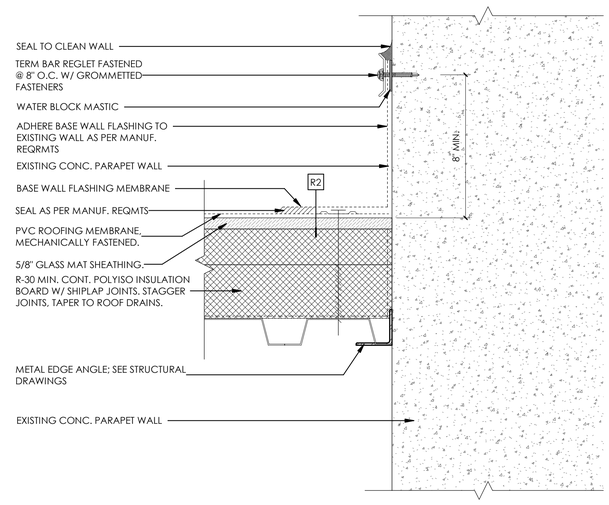

C2 ROOF - BASE FLASHING @ EX. CONC.
3" = 1'-0"

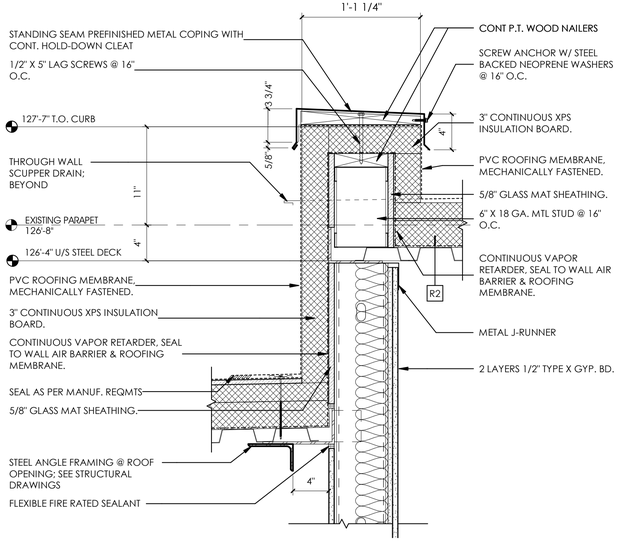

B2 ROOF - SHAFT WALL PENETRATION
1 1/2" = 1'-0"

A1 ROOF - ELEVATOR PENTHOUSE SCUPPER
1 1/2" = 1'-0"

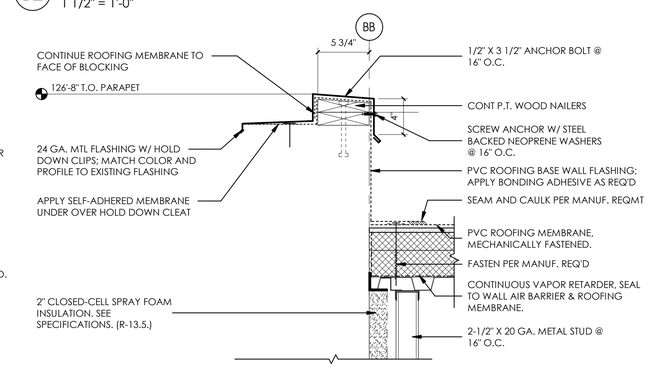

A2 ROOF - PARAPET @ NEW CONC BEAM
1 1/2" = 1'-0"

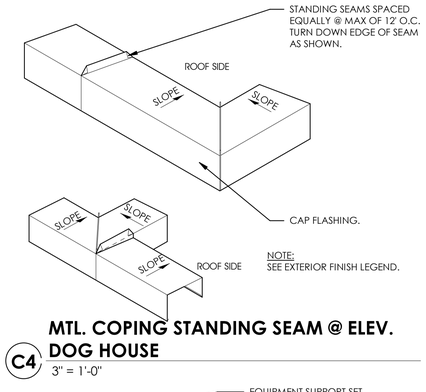

MTL. COPING STANDING SEAM @ ELEV. DOG HOUSE
C4
3" = 1'-0"

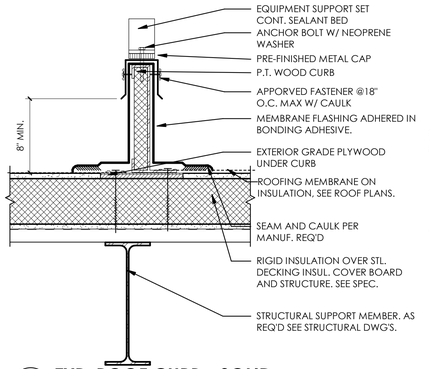

B4 TYP. ROOF CURB - SOLID
1 1/2" = 1'-0"

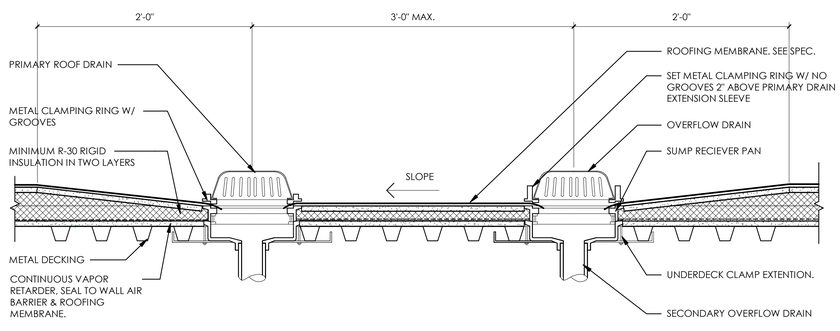

A4 ROOF - DRAIN DETAIL
1 1/2" = 1'-0"

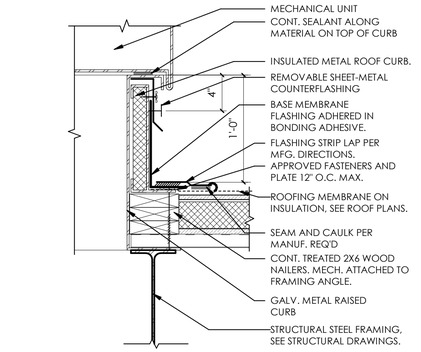

D5 ROOF - RTU CURB
1 1/2" = 1'-0"

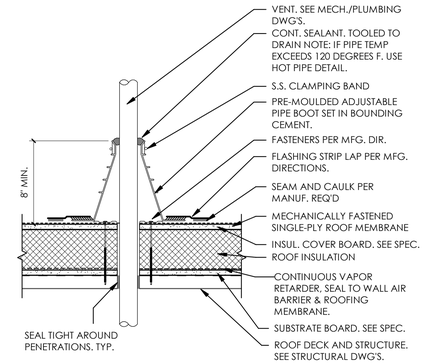

C5 ROOF - PIPE PENETRATION
1 1/2" = 1'-0"

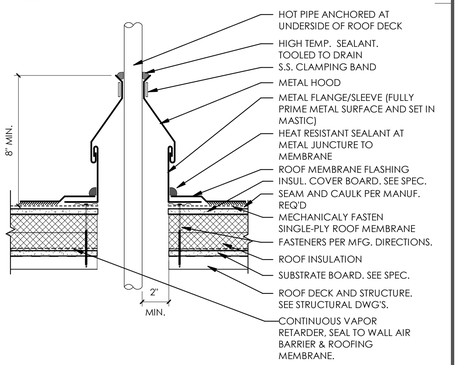

B5 ROOF - HOT PIPE PENETRATION
1 1/2" = 1'-0"

ARCHITECT 1877
ajc architects
703 east 1700 south
salt lake city, utah 84105
ph: 801.466.8818
fx: 801.466.4411
www.ajcarchitects.com

ARCHITECT / CONSULTANT

STATE OF UTAH
KENT B. RIGBY
No. 135090
05.18.2020
LICENSED ARCHITECT

OWNER INFORMATION

PROJECT DESCRIPTION

DUMKE GYMNASTICS TRAINING CENTER

1825 E. SOUTH CAMPUS DRIVE
SALT LAKE CITY, UT 84112

AHJ STAMP

SHEET NAME:
ROOF DETAILS

REVISIONS

MARK	DATE	DESCRIPTION

ISSUE DATA

ISSUE DATE:	10.18.21
ISSUE TYPE:	CD
DRAWN BY:	AT|DG
CHECKED BY:	KR
PROJECT#:	1877

SHEET NUMBER:
AE520

ALL IDEAS, DESIGNS, ARRANGEMENTS AND PLANS INDICATED OR REPRESENTED BY THIS DRAWING ARE OWNED BY AND THE PROPERTY OF AJC ARCHITECTS PC AND WERE CREATED, EVOLVED, AND DEVELOPED FOR USE ON AND IN CONNECTION WITH THE SPECIFIED PROJECT. NONE OF THE IDEAS, DESIGNS, ARRANGEMENTS OR PLANS INDICATED OR REPRESENTED BY THIS DRAWING OR OTHER DOCUMENTS PREPARED BY AJC ARCHITECTS PC, WHETHER COPYRIGHTED OR NOT, SHALL BE DISCLOSED TO ANY PERSON, FIRM, OR CORPORATION FOR ANY PURPOSE WHATSOEVER WITHOUT WRITTEN CONSENT OF AJC ARCHITECTS PC. WRITTEN DIMENSIONS ON THESE DRAWINGS SHALL HAVE PRECEDENCE OVER SCALE DIMENSIONS. CONTRACTORS SHALL VERIFY AND BE RESPONSIBLE FOR ALL DIMENSIONS AND CONDITIONS ON THE JOB AND THIS OFFICE MUST BE NOTIFIED OF ANY VARIATION FROM THE DIMENSIONS AND CONDITIONS SHOWN BY THESE DRAWINGS. WARNING: REPRODUCTION HEREOF IS A CRIMINAL OFFENSE UNDER 18 U.S.C. 506. UNAUTHORIZED DISCLOSURE MAY CONSTITUTE TRADE SECRET MISAPPROPRIATION IN VIOLATION OF 13-24-2-1, ET. SEQ. AND OTHER LAWS.

10/18/2021 4:32:04 PM S:\ajc users\ataylor\Revit Local Files\21 0928 - 1877 - Dumke Womens Gymnastics Facility V20_detached_ataylorlV5V2.rvt

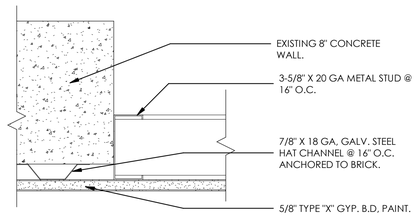

D2 WALL - GYP.BD @ EXIST. CONC. BASE BID
3" = 1'-0"

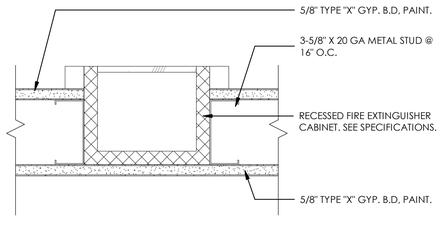

D3 RECESSED FIRE EXTINGUISHER
3" = 1'-0"

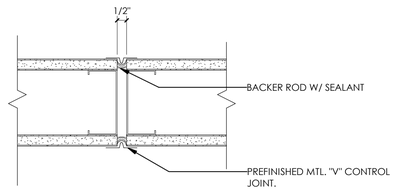

NON-RATED PARTITION

D4 CONTROL JOINT-GYP.BD
3" = 1'-0"

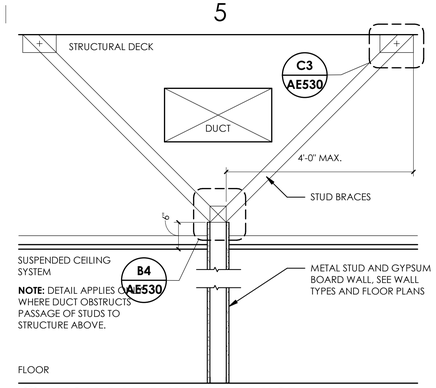

D5 NON-RATED WALL AT DUCT
3/4" = 1'-0"

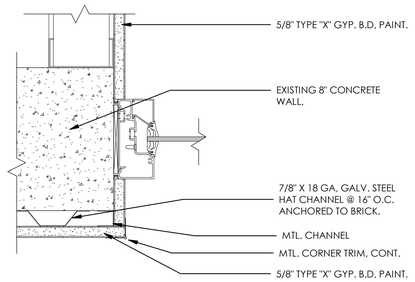

C2 WALL - GYP.BD @ EXIST. CONC. 2
3" = 1'-0"

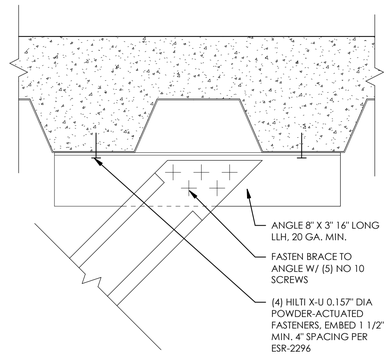

C3 PARTITION BRACING AT DECK
3" = 1'-0"

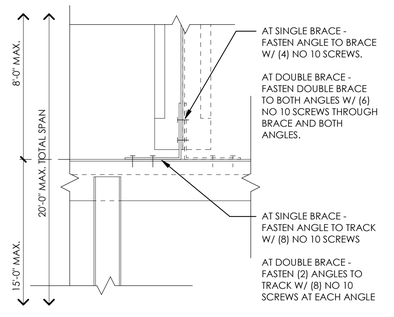

C4 PARTITION BRACING - ELEVATION
3" = 1'-0"

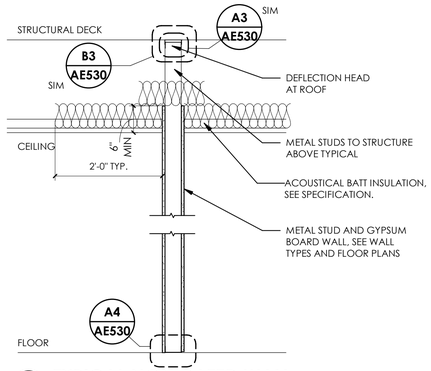

C5 TYPICAL NON-RATED WALL
3/4" = 1'-0"

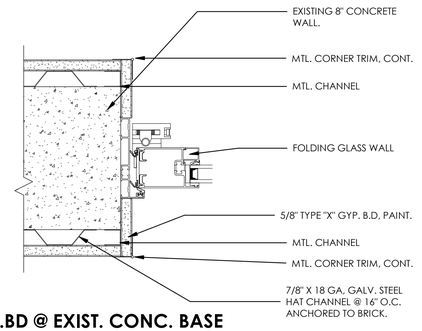

B2 WALL - GYP.BD @ EXIST. CONC. BASE BID
3" = 1'-0"

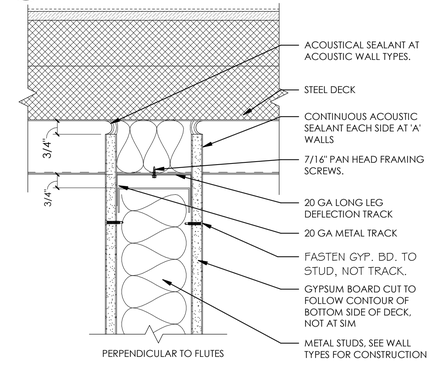

B3 DEFLECTION HEAD @ MTL DECK
3" = 1'-0"

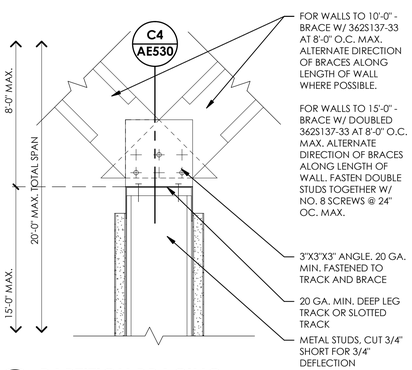

B4 PARTITION BRACING
3" = 1'-0"

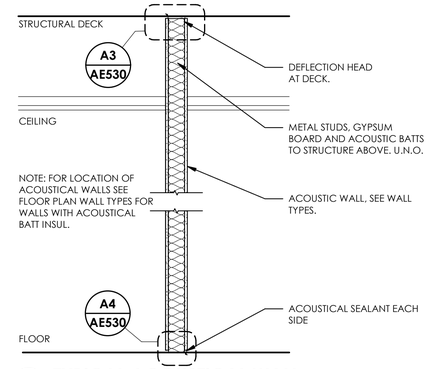

B5 TYPICAL ACOUSTICAL WALL
3/4" = 1'-0"

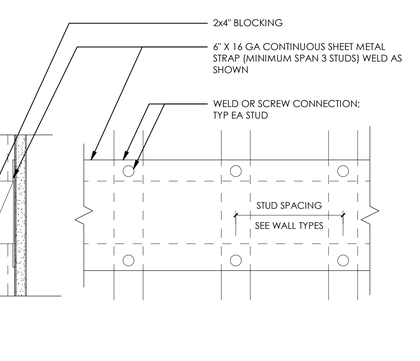

A1 TYPICAL BACKING STRAPS/BLOCKING
3" = 1'-0"

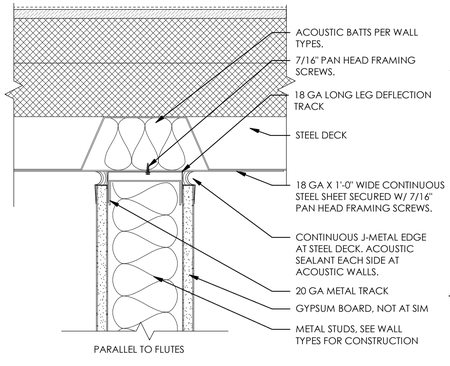

A3 DEFLECTION HEAD @ MTL DECK
3" = 1'-0"

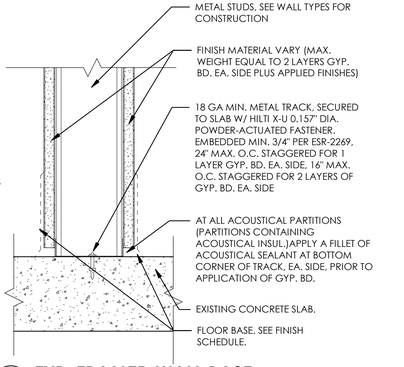

A4 TYP. FRAMED WALL BASE
3" = 1'-0"

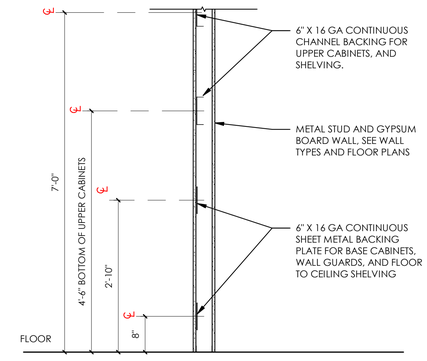

A5 BLOCKING/BACKING/STRAPS
3/4" = 1'-0"

ARCHITECT 1877
ajc architects
703 east 1700 south
salt lake city, utah 84105
ph: 801.466.8818
fx: 801.466.4411
www.ajcarchitects.com

ARCHITECT / CONSULTANT

STATE OF UTAH
KENT B. RIGBY
No. 135090
05.18.2020
LICENSED ARCHITECT

OWNER INFORMATION

PROJECT DESCRIPTION

DUMKE GYMNASTICS TRAINING CENTER

1825 E. SOUTH CAMPUS DRIVE
SALT LAKE CITY, UT 84112

AHJ STAMP

SHEET NAME:
WALL DETAILS

REVISIONS

MARK	DATE	DESCRIPTION

ISSUE DATA

ISSUE DATE:	10.18.21
ISSUE TYPE:	CD
DRAWN BY:	AT|DG
CHECKED BY:	KR
PROJECT#:	1877

SHEET NUMBER:
AE530

10/18/2021 4:32:04 PM S:\ajc users\taylor\Revit Local Files\21 0928 - 1877 - Dumke Womens Gymnastics Facility V20_detached_ataylorUV5V2.rvt

ALL IDEAS, DESIGNS, ARRANGEMENTS AND PLANS INDICATED OR REPRESENTED BY THIS DRAWING ARE OWNED BY, AND THE PROPERTY OF, AJC ARCHITECTS PC, AND WERE CREATED, EVOLVED, AND DEVELOPED FOR USE ON AND IN CONNECTION WITH THE SPECIFIED PROJECT. NONE OF THE IDEAS, DESIGNS, ARRANGEMENTS OR PLANS INDICATED OR REPRESENTED BY THIS DRAWING SHALL BE USED BY OR DISCLOSED TO ANY PERSON, FIRM, OR CORPORATION FOR ANY PURPOSE WHATSOEVER WITHOUT WRITTEN CONSENT OF AJC ARCHITECTS PC. WRITTEN DIMENSIONS ON THESE DRAWINGS SHALL HAVE PRECEDENCE OVER SCALE DIMENSIONS. CONTRACTORS SHALL VERIFY AND BE RESPONSIBLE FOR ALL DIMENSIONS AND CONDITIONS ON THE JOB AND THIS OFFICE MUST BE NOTIFIED OF ANY VARIATION FROM THE DIMENSIONS AND CONDITIONS SHOWN BY THESE DRAWINGS. WARNING: REPRODUCTION HEREOF IS A CRIMINAL OFFENSE UNDER 18 U.S.C. SEC. 506. UNAUTHORIZED DISCLOSURE MAY CONSTITUTE TRADE SECRET MISAPPROPRIATION IN VIOLATION OF 12-24-2-3 I.C. ET. SEQ. AND OTHER LAWS.

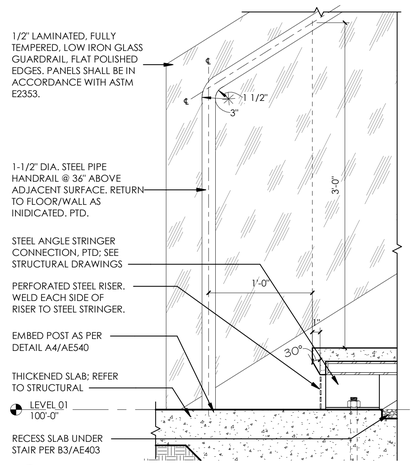

C3 MAIN STAIR - HANDRAIL DETAIL
1 1/2" = 1'-0"

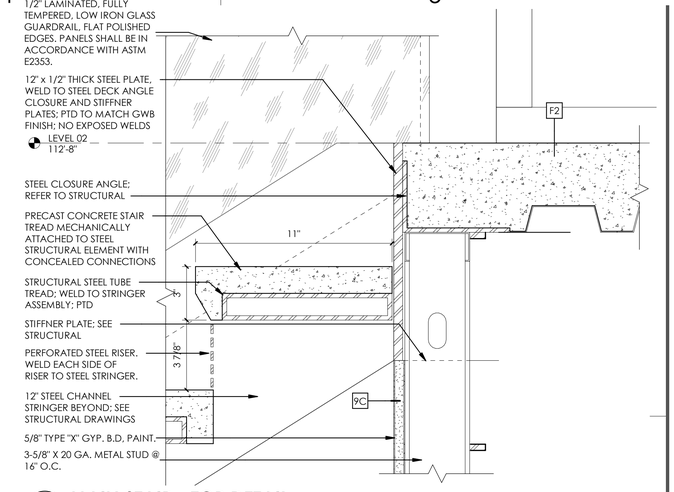

C4 MAIN STAIR - TOP DETAIL
3" = 1'-0"

B3 MAIN STAIR - HANDRAIL POST PLAN DETAIL
3" = 1'-0"

B4 MAIN STAIR - RISER/TREAD DETAIL
3" = 1'-0"

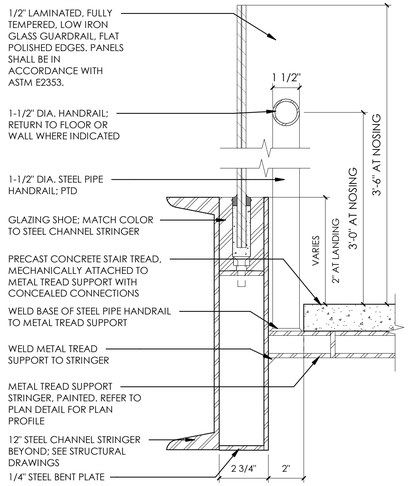

A3 MAIN STAIR - RAILING SECTION
3" = 1'-0"

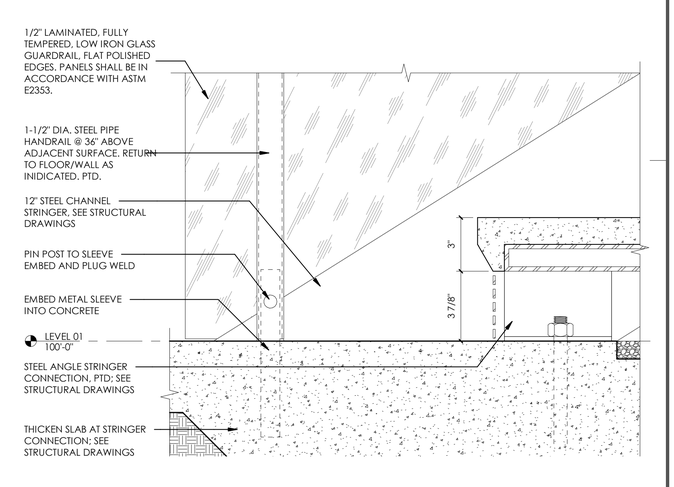

A4 MAIN STAIR - BASE DETAIL
3" = 1'-0"

ARCHITECT 1877
ajc architects
703 east 1700 south
salt lake city, utah 84105
ph: 801.466.8818
fx: 801.466.4411
www.ajcarchitects.com

ARCHITECT / CONSULTANT

STATE OF UTAH
KENT B. RIGBY
No. 135090
05.18.2020
LICENSED ARCHITECT

OWNER INFORMATION

PROJECT DESCRIPTION

DUMKE GYMNASTICS TRAINING CENTER

1825 E. SOUTH CAMPUS DRIVE
SALT LAKE CITY, UT 84112

AHJ STAMP

SHEET NAME:
STAIR & RAILING DETAILS

REVISIONS

MARK	DATE	DESCRIPTION

ISSUE DATA

ISSUE DATE:	10.18.21
ISSUE TYPE:	CD
DRAWN BY:	AT|DG
CHECKED BY:	KR
PROJECT#:	1877

SHEET NUMBER:
AE540

10/18/2021 4:32:05 PM S:\ajc users\taylor\Revit Local Files\21 0928 - 1877 - Dumke Womens Gymnastics Facility V20_detached_ataylorUv5V2.rvt

ALL IDEAS, DESIGNS, ARRANGEMENTS AND PLANS INDICATED OR REPRESENTED BY THIS DRAWING ARE OWNED BY, AND THE PROPERTY OF, AJC ARCHITECTS PC, AND WERE CREATED, EVOLVED, AND DEVELOPED FOR USE ON AND IN CONNECTION WITH THE SPECIFIED PROJECT. NONE OF THE IDEAS, DESIGNS, ARRANGEMENTS OR PLANS INDICATED OR REPRESENTED BY THIS DRAWING MAY BE USED BY OR DISCLOSED TO ANY PERSON, FIRM, OR CORPORATION FOR ANY PURPOSE WHATSOEVER WITHOUT WRITTEN CONSENT OF AJC ARCHITECTS PC. WRITTEN DIMENSIONS ON THESE DRAWINGS SHALL HAVE PRECEDENCE OVER SCALE DIMENSIONS. CONTRACTORS SHALL VERIFY AND BE RESPONSIBLE FOR ALL DIMENSIONS AND CONDITIONS ON THE JOB AND THIS OFFICE MUST BE NOTIFIED OF ANY VARIATION FROM THE DIMENSIONS AND CONDITIONS SHOWN BY THESE DRAWINGS. WARNING: REPRODUCTION HEREOF IS A CRIMINAL OFFENSE UNDER 18 U.S.C. SEC. 506. UNAUTHORIZED DISCLOSURE MAY CONSTITUTE TRADE SECRET MISAPPROPRIATION IN VIOLATION OF 17 U.S.C. § 1341 AND OTHER LAWS.

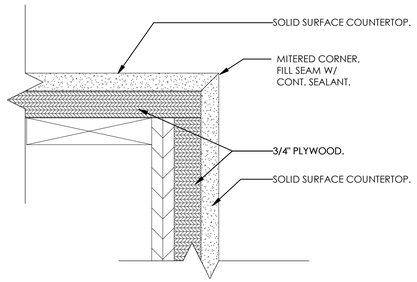

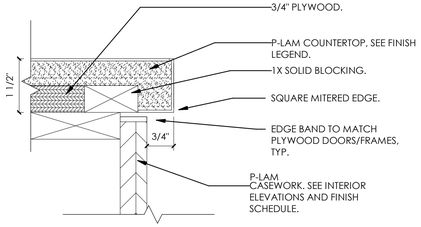

*DETAIL FOR VE OPTION

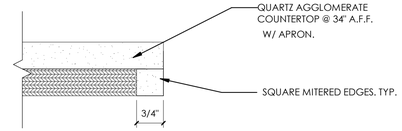

D3 CASEWORK - WATERFALL EDGE
6" = 1'-0"

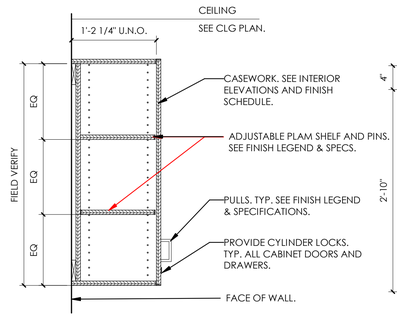

D4 NOSING - PLAM
6" = 1'-0"

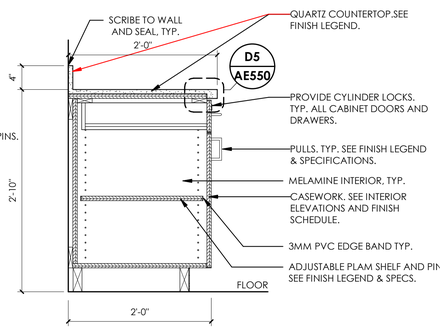

D5 NOSING - QUARTZ
6" = 1'-0"

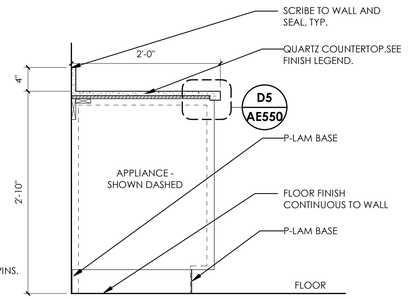

C3 CASEWORK SECTION - UPPER
1" = 1'-0"

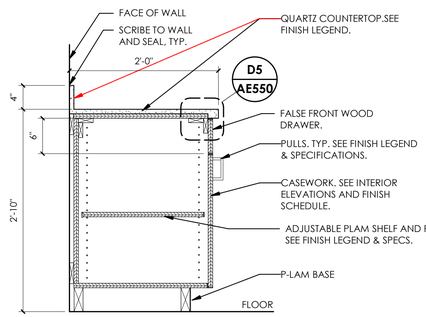

C4 BASE CABINET W/DRAWER
1" = 1'-0"

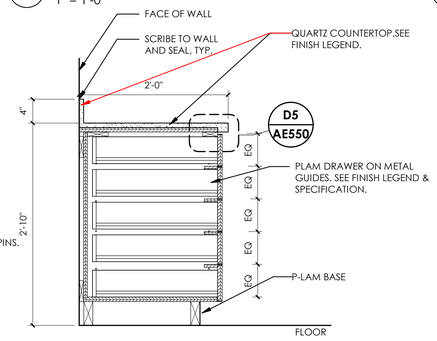

C5 CASEWORK AT APPLIANCE
1" = 1'-0"

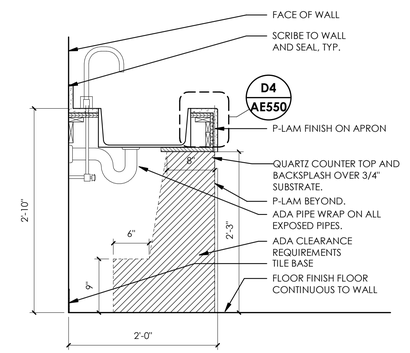

B3 FALSE DRAWER FRONT
1" = 1'-0"

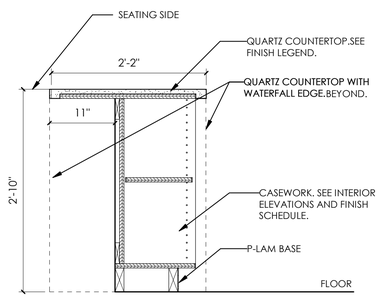

B4 5 DRAWER BASE
1" = 1'-0"

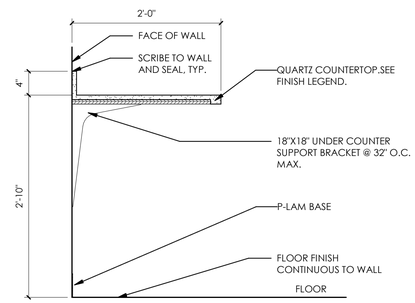

B5 OPEN CABINET W/ SINK
1" = 1'-0"

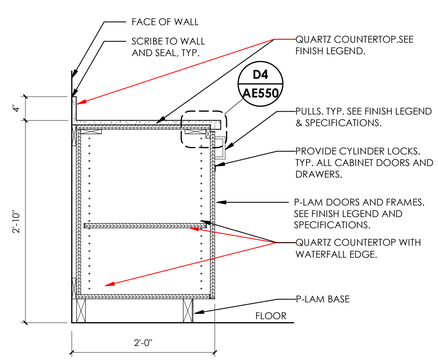

A3 CABINET BASE WITH WATERFALL EDGE
1" = 1'-0"

A4 CASEWORK SECTION - COUNTER
1" = 1'-0"

A5 BASE CABINET NO DRAWER
1" = 1'-0"

ARCHITECT 1877

ajc architects

703 east 1700 south
salt lake city, utah 84105
ph: 801.466.8818
fx: 801.466.4411
www.ajcarchitects.com

ARCHITECT / CONSULTANT

STATE OF UTAH
KENT B. RIGBY
No. 135090
05.18.2020
LICENSED ARCHITECT

OWNER INFORMATION

PROJECT DESCRIPTION

DUMKE GYMNASTICS TRAINING CENTER

1825 E. SOUTH CAMPUS DRIVE
SALT LAKE CITY, UT 84112

AHJ STAMP

SHEET NAME:

CASEWORK DETAILS

REVISIONS

MARK	DATE	DESCRIPTION

ISSUE DATA

ISSUE DATE:	10.18.21
ISSUE TYPE:	CD
DRAWN BY:	AT|DG
CHECKED BY:	KR
PROJECT#:	1877

SHEET NUMBER:

AE550

10/18/2021 4:32:06 PM S:\ajc users\taylor\Revit Local Files\21 0928 - 1877 - Dumke Womens Gymnastics Facility V20_detached_ataylorUv5V2.rvt

ALL IDEAS, DESIGNS, ARRANGEMENTS AND PLANS INDICATED OR REPRESENTED BY THIS DRAWING ARE OWNED BY AND THE PROPERTY OF AJC ARCHITECTS PC AND WERE CREATED, EVOLVED, AND DEVELOPED FOR USE ON AND IN CONNECTION WITH THE SPECIFIED PROJECT. NONE OF THE IDEAS, DESIGNS, ARRANGEMENTS OR PLANS SHALL BE USED BY OR DISCLOSED TO ANY PERSON, FIRM, OR CORPORATION FOR ANY PURPOSE WHATSOEVER WITHOUT WRITTEN CONSENT OF AJC ARCHITECTS PC. WRITTEN DIMENSIONS ON THESE DRAWINGS SHALL HAVE PRECEDENCE OVER SCALE DIMENSIONS. CONTRACTORS SHALL VERIFY AND BE RESPONSIBLE FOR ALL DIMENSIONS AND CONDITIONS ON THE JOB AND THIS OFFICE MUST BE NOTIFIED OF ANY VARIATION FROM THE DIMENSIONS AND CONDITIONS SHOWN BY THESE DRAWINGS. WARNING: REPRODUCTION HEREOF IS A CRIMINAL OFFENSE UNDER 18 U.S.C. 506. UNAUTHORIZED DISCLOSURE MAY CONSTITUTE TRADE SECRET MISAPPROPRIATION IN VIOLATION OF 17 C.F.R. 240.10b-5 AND OTHER LAWS.

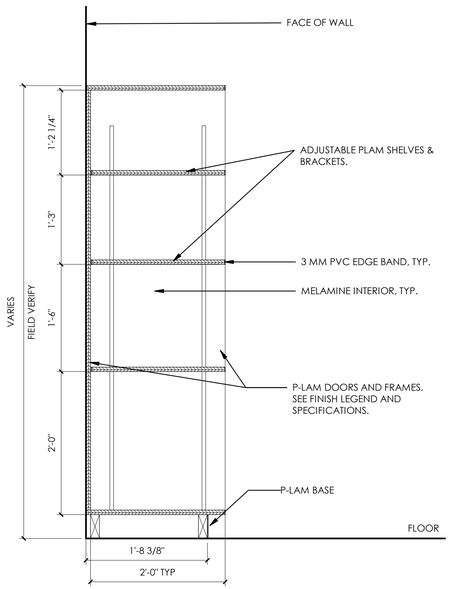

A1 TALL STORAGE CABINET
1" = 1'-0"

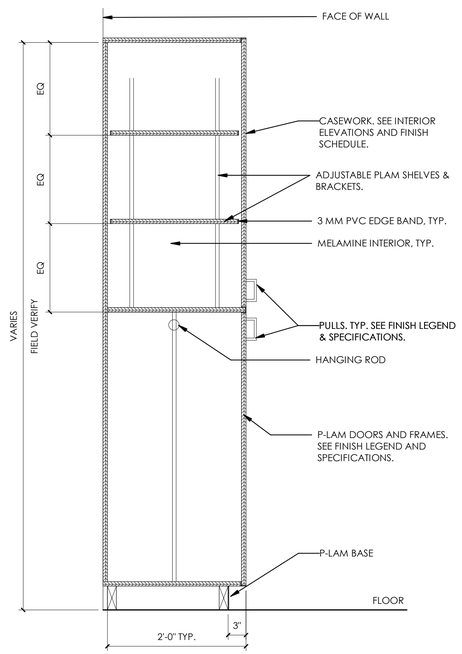

A2 TALL CABINET DBL 8FT
1" = 1'-0"

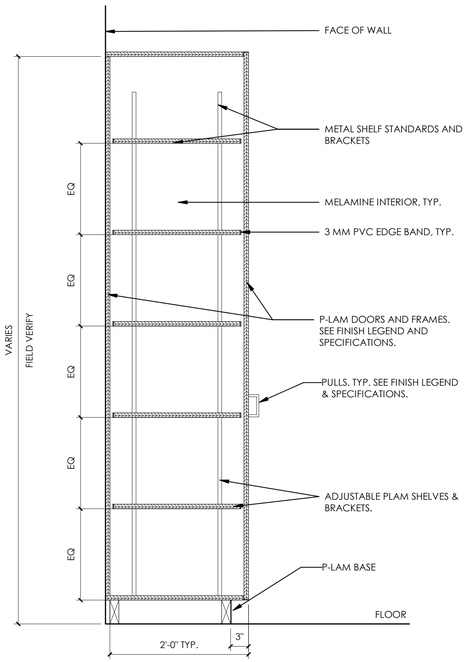

A4 CASEWORK SECTION
1" = 1'-0"

ARCHITECT 1877

ajc architects

703 east 1700 south
salt lake city, utah 84105
ph: 801.466.8818
fx: 801.466.4411
www.ajcarchitects.com

ARCHITECT / CONSULTANT

STATE OF UTAH
KENT B. RIGBY
No. 135090
05.18.2020
LICENSED ARCHITECT

OWNER INFORMATION

PROJECT DESCRIPTION

DUMKE GYMNASTICS TRAINING CENTER

1825 E. SOUTH CAMPUS DRIVE
SALT LAKE CITY, UT 84112

AHJ STAMP

SHEET NAME:
CASEWORK DETAILS

REVISIONS

MARK	DATE	DESCRIPTION

ISSUE DATA

ISSUE DATE:	10.18.21
ISSUE TYPE:	CD
DRAWN BY:	AT|DG
CHECKED BY:	KR
PROJECT#:	1877

SHEET NUMBER:

AE551

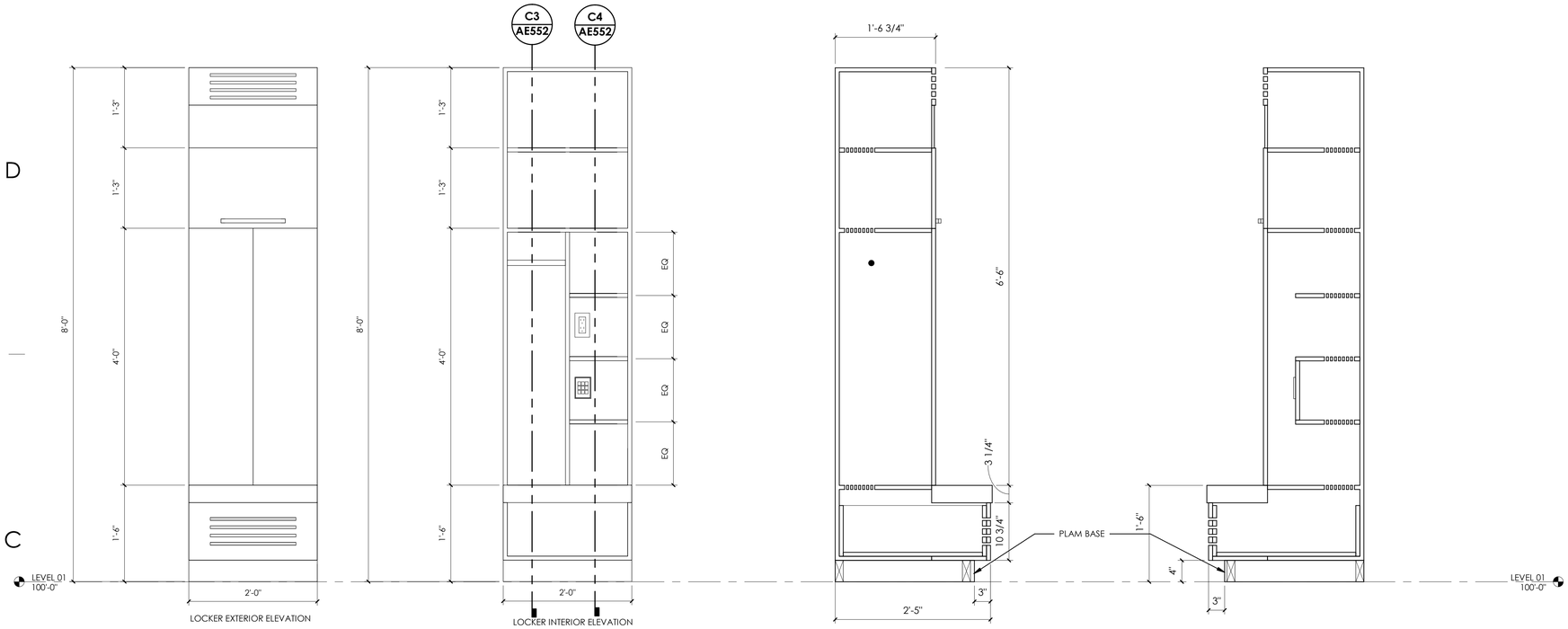

C1 LOCKER ELEVATION Copy 1

1" = 1'-0"

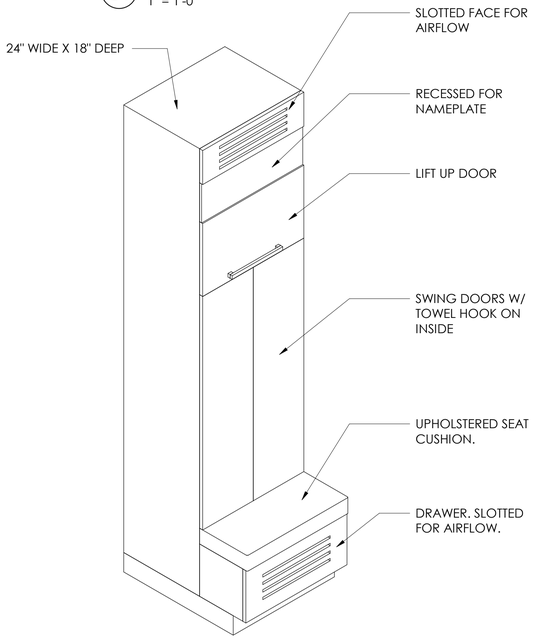

C3 LOCKER SECTION A

1" = 1'-0"

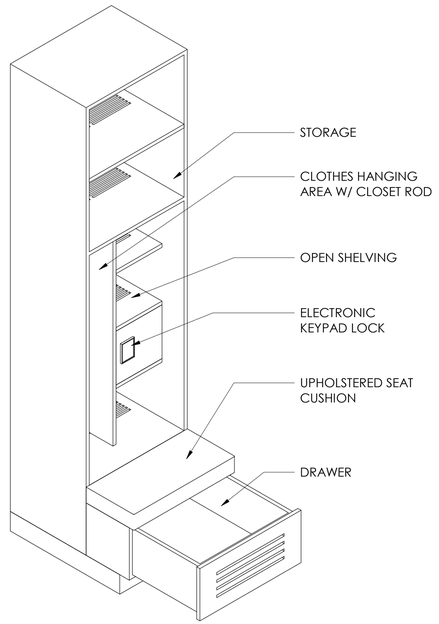

C4 LOCKER SECTION B

1" = 1'-0"

10/18/2021 4:32:08 PM S:\ajc users\atayloriRevit Local Files\21 0928 - 1877 - Dumke Womens Gymnastics Facility V20_detached_atayloriUV5V2.rvt

ALL IDEAS, DESIGNS, ARRANGEMENTS AND PLANS INDICATED OR REPRESENTED BY THIS DRAWING ARE OWNED BY AND THE PROPERTY OF AJC ARCHITECTS PC AND WERE CREATED, EVOLVED, AND DEVELOPED FOR USE ON AND IN CONNECTION WITH THE SPECIFIED PROJECT. NONE OF THE IDEAS, DESIGNS, ARRANGEMENTS OR PLANS SHALL BE USED BY OR DISCLOSED TO ANY PERSON, FIRM, OR CORPORATION FOR ANY PURPOSE WHATSOEVER WITHOUT WRITTEN CONSENT OF AJC ARCHITECTS PC. WRITTEN DIMENSIONS ON THESE DRAWINGS SHALL HAVE PRECEDENCE OVER SCALE DIMENSIONS. CONTRACTORS SHALL VERIFY AND BE RESPONSIBLE FOR ALL DIMENSIONS AND CONDITIONS ON THE JOB AND THIS OFFICE MUST BE NOTIFIED OF ANY VARIATION FROM THE DIMENSIONS AND CONDITIONS SHOWN BY THESE DRAWINGS. WARNING: REPRODUCTION HEREOF IS A CRIMINAL OFFENSE UNDER 18 U.S.C. SEC. 506. UNAUTHORIZED DISCLOSURE MAY CONSTITUTE TRADE SECRET MISAPPROPRIATION IN VIOLATION OF I.C.24-2-31-1 ET. SEQ. AND OTHER LAWS.

ARCHITECT 1877

ajc architects
703 east 1700 south
salt lake city, utah 84105
ph: 801.466.8818
fx: 801.466.4411
www.ajcarchitects.com

ARCHITECT / CONSULTANT

STATE OF UTAH
KENT R. RIGBY
No. 135096
05.18.2020
LICENSED ARCHITECT

OWNER INFORMATION

PROJECT DESCRIPTION

DUMKE GYMNASTICS TRAINING CENTER

1825 E. SOUTH CAMPUS DRIVE
SALT LAKE CITY, UT 84112

AHJ STAMP

SHEET NAME:

LOCKER DETAILS

REVISIONS

MARK	DATE	DESCRIPTION

ISSUE DATA

ISSUE DATE:	10.18.21
ISSUE TYPE:	CD
DRAWN BY:	AT|DG
CHECKED BY:	KR
PROJECT#:	1877

SHEET NUMBER:

AE552

10/18/2021 4:32:11 PM S:\ajc users\taylor\Revit Local Files\21 0928 - 1877 - Dumke Womens Gymnastics Facility V20_detached_ataylorUv5V2.rvt

ALL IDEAS, DESIGNS, ARRANGEMENTS AND PLANS INDICATED OR REPRESENTED BY THIS DRAWING ARE OWNED BY AND THE PROPERTY OF AJC ARCHITECTS PC, AND WERE CREATED, EVOLVED, AND DEVELOPED FOR USE ON AND IN CONNECTION WITH THE SPECIFIED PROJECT. NONE OF THE IDEAS, DESIGNS, ARRANGEMENTS OR PLANS INDICATED OR REPRESENTED BY THIS DRAWING MAY BE USED BY OR DISCLOSED TO ANY PERSON, FIRM, OR CORPORATION FOR ANY PURPOSE WHATSOEVER WITHOUT WRITTEN CONSENT OF AJC ARCHITECTS PC. WRITTEN DIMENSIONS ON THESE DRAWINGS SHALL HAVE PRECEDENCE OVER SCALE DIMENSIONS. CONTRACTORS SHALL VERIFY AND BE RESPONSIBLE FOR ALL DIMENSIONS AND CONDITIONS ON THE JOB AND THIS OFFICE MUST BE NOTIFIED OF ANY VARIATION FROM THE DIMENSIONS AND CONDITIONS SHOWN BY THESE DRAWINGS. WARNING: REPRODUCTION HEREOF IS A CRIMINAL OFFENSE UNDER 18 U.S.C. SEC. 506. UNAUTHORIZED DISCLOSURE MAY CONSTITUTE TRADE SECRET MISAPPROPRIATION IN VIOLATION OF 17 U.S.C. § 1 ET. SEQ. AND OTHER LAWS.

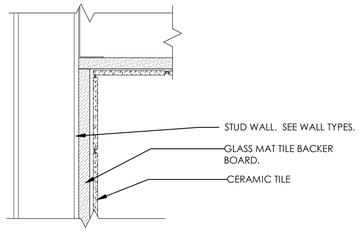

D2 TILE TRANSITION INSIDE CORNER
3" = 1'-0"

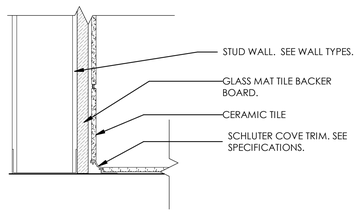

D3 TILE - METAL COVE BASE
3" = 1'-0"

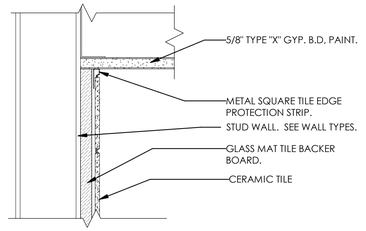

D4 TILE TRANSITION INSIDE CORNER / CEILING
3" = 1'-0"

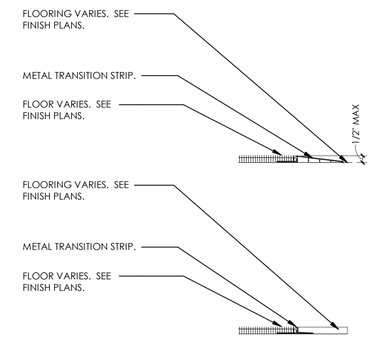

D5 METAL TRANSITION STRIP
3" = 1'-0"

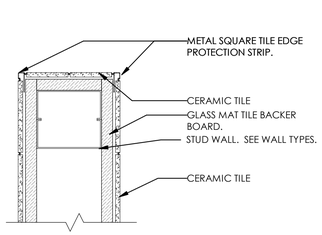

C3 TILE TRANSITION OUTSIDE CORNER
3" = 1'-0"

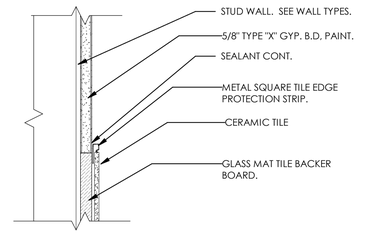

C4 TILE TO GYPSUM TRANSITION
3" = 1'-0"

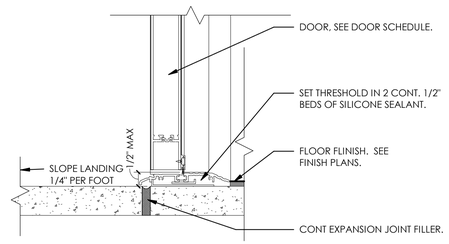

C5 ALUMINUM THRESHOLD
3" = 1'-0"

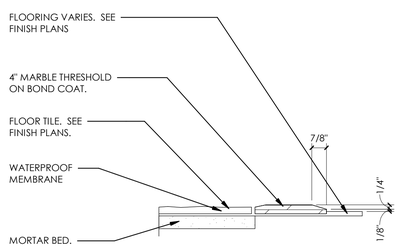

B3 MARBLE THRESHOLD
3" = 1'-0"

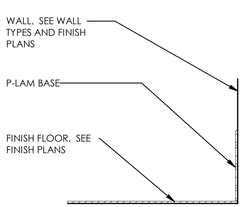

B4 BASE - RUBBER
3" = 1'-0"

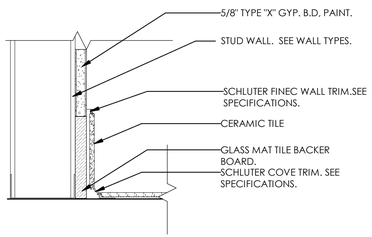

B5 TILE - METAL COVE BASE WITH GYP WALL
3" = 1'-0"

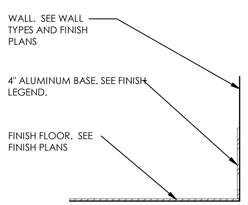

A1 BASE - ALUMINUM BASE
3" = 1'-0"

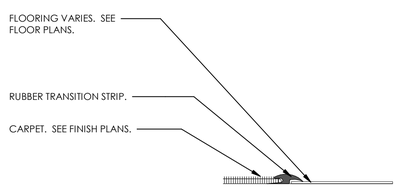

A3 RUBBER TRANSITION STRIP
3" = 1'-0"

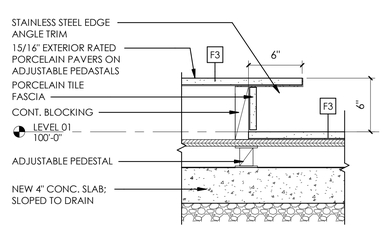

A4 TRANQUILITY GARDEN - FLOOR EDGE DETAIL
1 1/2" = 1'-0"

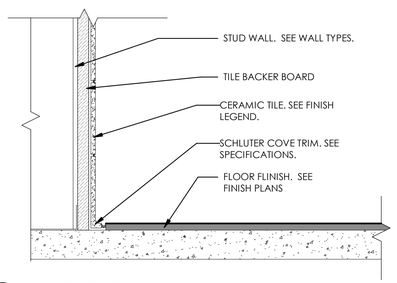

A5 BASE - TILE
3" = 1'-0"

ARCHITECT 1877

ajc architects

703 east 1700 south
salt lake city, utah 84105
ph: 801.466.8818
fx: 801.466.4411
www.ajcarchitects.com

ARCHITECT / CONSULTANT

STATE OF UTAH
KENT R. RIGBY
No. 135090
05.18.2020
LICENSED ARCHITECT

OWNER INFORMATION

PROJECT DESCRIPTION

DUMKE GYMNASTICS TRAINING CENTER

1825 E. SOUTH CAMPUS DRIVE
SALT LAKE CITY, UT 84112

AHJ STAMP

SHEET NAME:
FINISH DETAILS

REVISIONS

MARK	DATE	DESCRIPTION

ISSUE DATA

ISSUE DATE:	10.18.21
ISSUE TYPE:	CD
DRAWN BY:	AT|DG
CHECKED BY:	KR
PROJECT#:	1877

SHEET NUMBER:

AE560

10/18/2021 4:32:14 PM S:\ajc users\aytaylor\Revit Local Files\21 0928 - 1877 - Dumke Womens Gymnastics Facility V20_detached_aytaylorUV5V2.rvt

ALL IDEAS, DESIGNS, ARRANGEMENTS AND PLANS INDICATED OR REPRESENTED BY THIS DRAWING ARE OWNED BY AND THE PROPERTY OF AJC ARCHITECTS PC AND WERE CREATED, EVOLVED, AND DEVELOPED FOR USE ON AND IN CONNECTION WITH THE SPECIFIED PROJECT. NONE OF THE IDEAS, DESIGNS, ARRANGEMENTS OR PLANS INDICATED IN OR REPRESENTED BY THIS DRAWING, IN WHOLE OR IN PART, SHALL BE USED BY OR DISCLOSED TO ANY PERSON, FIRM, OR CORPORATION FOR ANY PURPOSE WHATSOEVER WITHOUT WRITTEN CONSENT OF AJC ARCHITECTS PC. WRITTEN DIMENSIONS ON THESE DRAWINGS SHALL HAVE PRECEDENCE OVER SCALE DIMENSIONS. CONTRACTORS SHALL VERIFY AND BE RESPONSIBLE FOR ALL DIMENSIONS AND CONDITIONS ON THE JOB AND THIS OFFICE MUST BE NOTIFIED OF ANY VARIATION FROM THE DIMENSIONS AND CONDITIONS SHOWN BY THESE DRAWINGS. WARNING: REPRODUCTION HEREOF IS A CRIMINAL OFFENSE UNDER 18 U.S.C. SEC. 506. UNAUTHORIZED DISCLOSURE MAY CONSTITUTE TRADE SECRET MISAPPROPRIATION IN VIOLATION OF 13-24-2-1, ET. SEQ. AND OTHER LAWS.

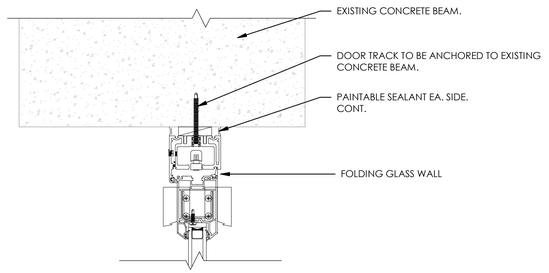

D3 DOOR - FOLDING GLASS HEAD
3" = 1'-0"

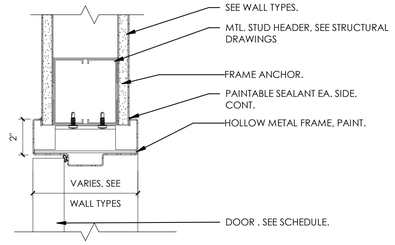

D4 DOOR - HM HEAD @ GYP BD
3" = 1'-0"

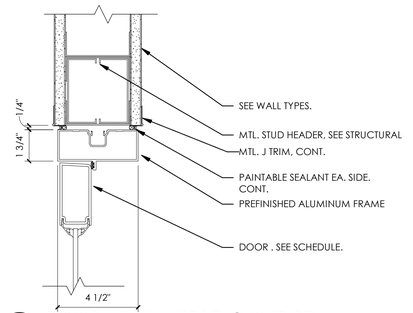

D5 DOOR - ALUM HEAD @ GYP BD
3" = 1'-0"

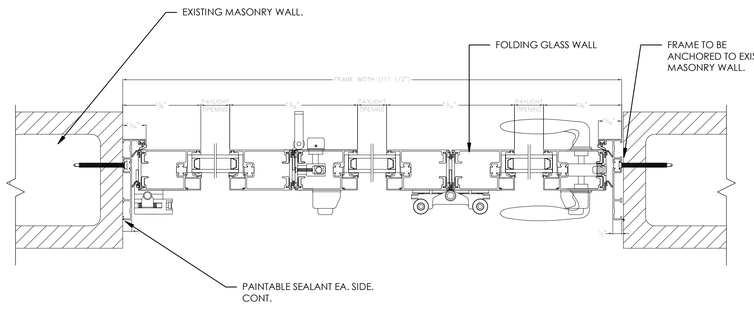

C3 DOOR - FOLDING GLASS JAMB
3" = 1'-0"

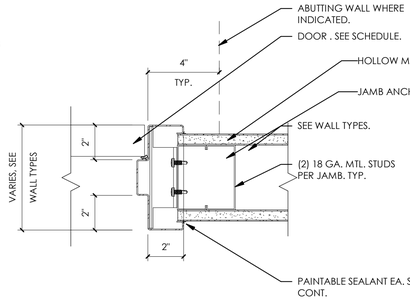

C4 DOOR - HM JAMB @ GYP BD
3" = 1'-0"

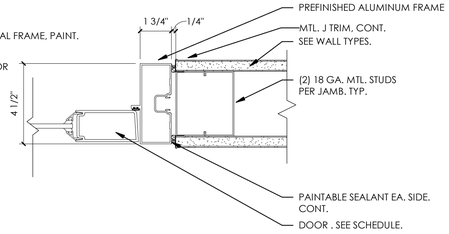

C5 DOOR - ALUM JAMB @ GYP BD
3" = 1'-0"

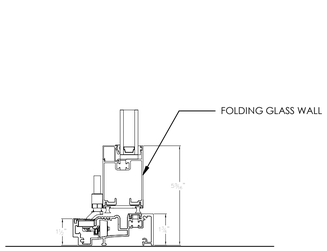

B3 DOOR - FOLDING GLASS SILL
3" = 1'-0"

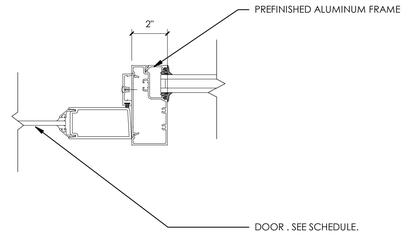

B4 DOOR - ALUM JAMB @ STOREFRONT
3" = 1'-0"

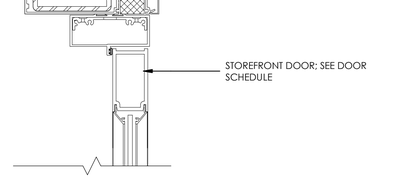

B5 DOOR - JAMB @ MAIN ENTRY
3" = 1'-0"

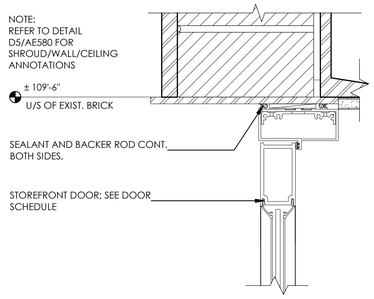

A3 DOOR - HEAD @ LOUNGE
3" = 1'-0"

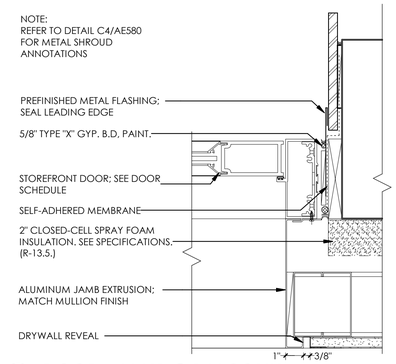

A4 DOOR - JAMB @ BALCONY
3" = 1'-0"

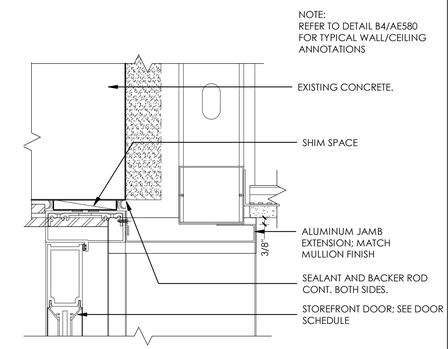

A5 DOOR - HEADER @ BALCONY
3" = 1'-0"

ARCHITECT 1877

ajc architects

703 east 1700 south
salt lake city, utah 84105
ph: 801.466.8818
fx: 801.466.4411
www.ajcarchitects.com

ARCHITECT / CONSULTANT

STATE OF UTAH
KENT B. RIGBY
No. 135090
05.18.2020
LICENSED ARCHITECT

OWNER INFORMATION

PROJECT DESCRIPTION

DUMKE GYMNASTICS TRAINING CENTER

1825 E. SOUTH CAMPUS DRIVE
SALT LAKE CITY, UT 84112

AHJ STAMP

SHEET NAME:
DOOR DETAILS

REVISIONS

MARK	DATE	DESCRIPTION

ISSUE DATA

ISSUE DATE:	10.18.21
ISSUE TYPE:	CD
DRAWN BY:	AT|DG
CHECKED BY:	KR
PROJECT#:	1877

SHEET NUMBER:

AE570

10/18/2021 4:32:19 PM S:\ajc users\ataylor\Revit Local Files\21 0928 - 1877 - Dumke Womens Gymnastics Facility V20_detached_ataylorlV5V2.rvt

ALL IDEAS, DESIGNS, ARRANGEMENTS AND PLANS INDICATED OR REPRESENTED BY THIS DRAWING ARE OWNED BY AND THE PROPERTY OF AJC ARCHITECTS PC AND WERE CREATED, EVOLVED, AND DEVELOPED FOR USE ON AND IN CONNECTION WITH THE SPECIFIED PROJECT. NONE OF THE IDEAS, DESIGNS, ARRANGEMENTS OR PLANS INDICATED IN OR REPRESENTED BY THIS DRAWING, INCLUDING WITHOUT LIMITATION, THE ARCHITECTURAL WORKS, MAY BE USED BY OR DISCLOSED TO ANY PERSON, FIRM, OR CORPORATION FOR ANY PURPOSE WHATSOEVER WITHOUT WRITTEN CONSENT OF AJC ARCHITECTS PC. WRITTEN DIMENSIONS ON THESE DRAWINGS SHALL HAVE PRECEDENCE OVER SCALE DIMENSIONS. CONTRACTORS SHALL VERIFY AND BE RESPONSIBLE FOR ALL DIMENSIONS AND CONDITIONS ON THE JOB AND THIS OFFICE MUST BE NOTIFIED OF ANY VARIATION FROM THE DIMENSIONS AND CONDITIONS SHOWN BY THESE DRAWINGS. WARNING: REPRODUCTION HEREOF IS A CRIMINAL OFFENSE UNDER 18 U.S.C. 506. UNAUTHORIZED DISCLOSURE MAY CONSTITUTE TRADE SECRET MISAPPROPRIATION IN VIOLATION OF UC 24.2.31.1 ET. SEQ. AND OTHER LAWS.

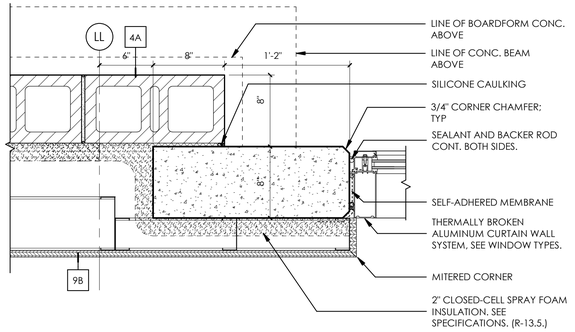

D2 CURTAIN WALL JAMB - WEST
1 1/2" = 1'-0"

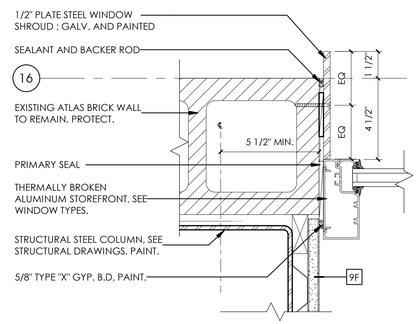

D4 WINDOW - JAMB @ LOUNGE GLAZING
3" = 1'-0"

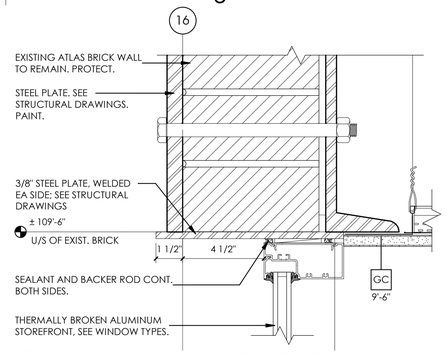

D5 WINDOW - HEAD @ LOUNGE GLAZING
3" = 1'-0"

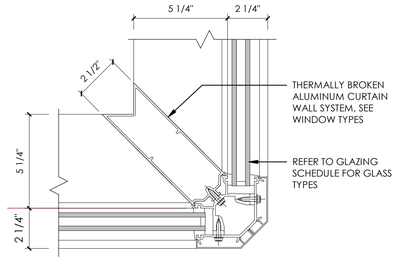

C2 CURTAIN WALL - CORNER MULLION
3" = 1'-0"

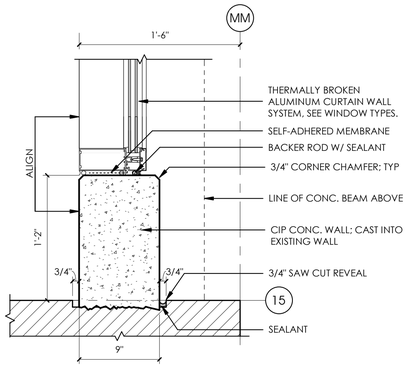

C3 CURTAIN WALL JAMB - EAST
1 1/2" = 1'-0"

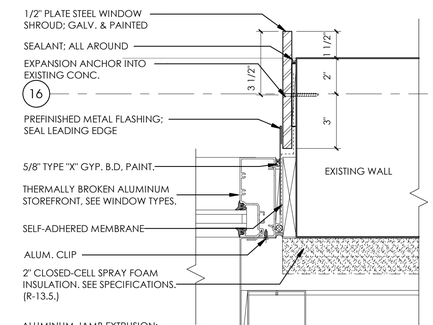

C4 WINDOW - TYP. JAMB @ EXISTING CONC.
3" = 1'-0"

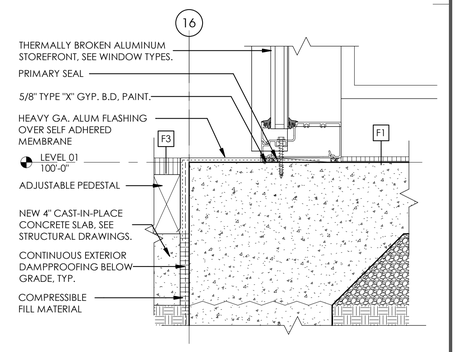

C5 WINDOW - SILL @ LOUNGE GLAZING
3" = 1'-0"

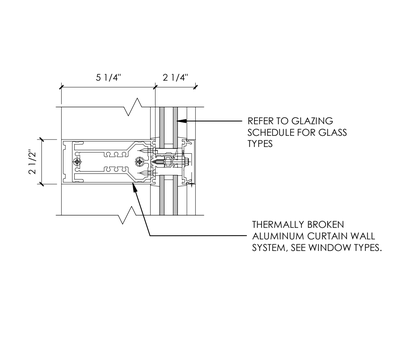

B2 CURTAIN WALL - HORIZ. MULLION
3" = 1'-0"

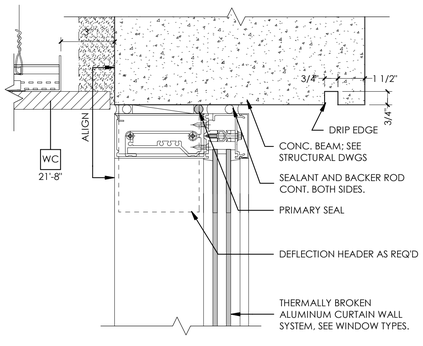

B3 CURTAIN WALL - HEADER
3" = 1'-0"

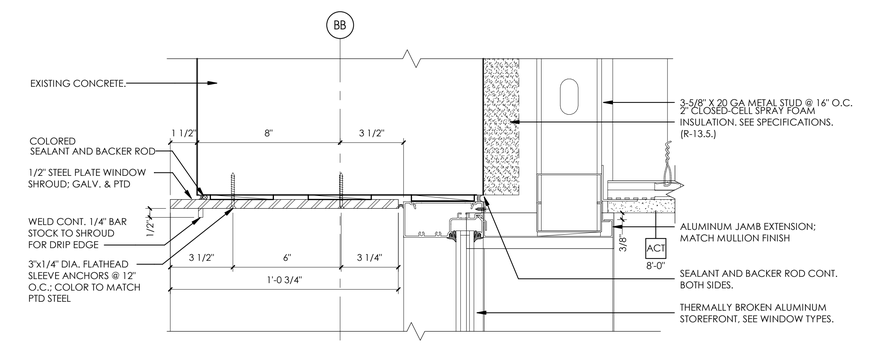

B4 WINDOW - TYP HEAD @ EXISTING CONC WALL
3" = 1'-0"

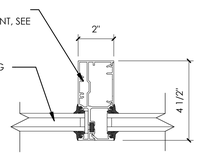

A1 EXTERIOR STOREFRONT MULLION
3" = 1'-0"

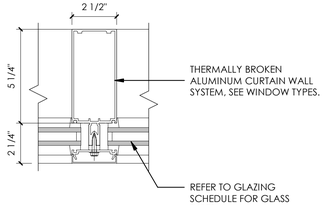

A2 CURTAIN WALL - VERT. MULLION
3" = 1'-0"

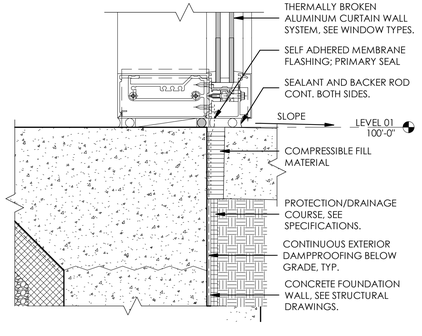

A3 CURTAIN WALL - SILL @ FOUNDATION
3" = 1'-0"

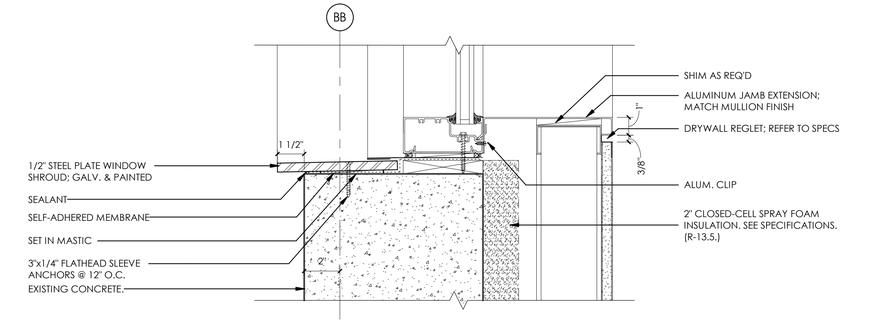

A4 WINDOW - TYP. SILL @ EXISTING CONC WALL
3" = 1'-0"

ARCHITECT 1877
ajc architects
703 east 1700 south
salt lake city, utah 84105
ph: 801.466.8818
fx: 801.466.4411
www.ajcarchitects.com

ARCHITECT / CONSULTANT

STATE OF UTAH
KENT B. RIGBY
No. 135096
05.18.2020
LICENSED ARCHITECT

OWNER INFORMATION

PROJECT DESCRIPTION

DUMKE GYMNASTICS TRAINING CENTER

1825 E. SOUTH CAMPUS DRIVE
SALT LAKE CITY, UT 84112

AHJ STAMP

SHEET NAME:
EXTERIOR WINDOW DETAILS

REVISIONS

MARK	DATE	DESCRIPTION

ISSUE DATA

ISSUE DATE:	10.18.21
ISSUE TYPE:	CD
DRAWN BY:	AT|DG
CHECKED BY:	KR
PROJECT#:	1877

SHEET NUMBER:

AE580

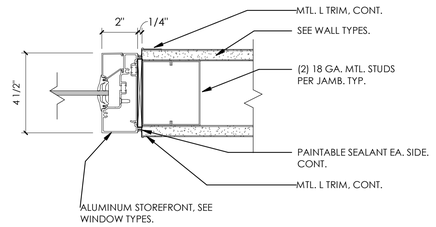

D4 STOREFRONT - JAMB @ GYP. BD
3" = 1'-0"

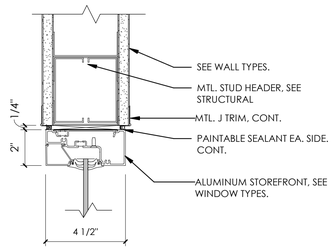

D5 STOREFRONT - TYP. HEAD @ GYP.BD
3" = 1'-0"

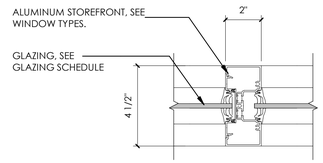

C4 STOREFRONT - VERT. MULLION
3" = 1'-0"

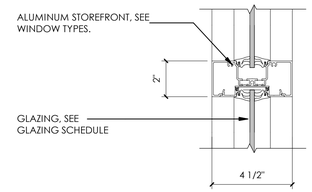

C5 STOREFRONT - HORIZ. MULLION
3" = 1'-0"

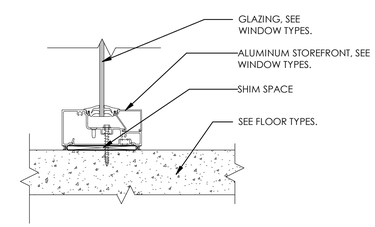

B5 STOREFRONT - TYP. BASE - INTERIOR
3" = 1'-0"

ARCHITECT 1877

ajc architects

703 east 1700 south
salt lake city, utah 84105
ph: 801.466.8818
fx: 801.466.4411
www.ajcarchitects.com

ARCHITECT / CONSULTANT



OWNER INFORMATION

PROJECT DESCRIPTION

DUMKE GYMNASTICS TRAINING CENTER

1825 E. SOUTH CAMPUS DRIVE
SALT LAKE CITY, UT 84112

AHJ STAMP

SHEET NAME:

INTERIOR WINDOW DETAILS

REVISIONS

MARK	DATE	DESCRIPTION

ISSUE DATA

ISSUE DATE:	10.18.21
ISSUE TYPE:	CD
DRAWN BY:	AT|DG
CHECKED BY:	KR
PROJECT#:	1877

SHEET NUMBER:

AE581

10/18/2021 4:32:20 PM S:\ajc users\ataylor\Revit Local Files\21 0928 - 1877 - Dumke Womens Gymnastics Facility V20_detached_atayloruV5V2.rvt

ALL IDEAS, DESIGNS, ARRANGEMENTS AND PLANS INDICATED OR REPRESENTED BY THIS DRAWING ARE OWNED BY AND THE PROPERTY OF AJC ARCHITECTS PC AND WERE CREATED, REVISED, AND DEVELOPED FOR USE ON AND IN CONNECTION WITH THE SPECIFIED PROJECT. NONE OF THE IDEAS, DESIGNS, ARRANGEMENTS OR PLANS SHALL BE USED BY OR DISCLOSED TO ANY PERSON, FIRM, OR CORPORATION FOR ANY PURPOSE WHATSOEVER WITHOUT WRITTEN CONSENT OF AJC ARCHITECTS PC. WRITTEN DIMENSIONS ON THESE DRAWINGS SHALL HAVE PRECEDENCE OVER SCALE DIMENSIONS. CONTRACTORS SHALL VERIFY AND BE RESPONSIBLE FOR ALL DIMENSIONS AND CONDITIONS ON THE JOB AND THIS OFFICE MUST BE NOTIFIED OF ANY VARIATION FROM THE DIMENSIONS AND CONDITIONS SHOWN BY THESE DRAWINGS. WARNING: REPRODUCTION HEREOF IS A CRIMINAL OFFENSE UNDER 18 U.S.C. SEC. 506. UNAUTHORIZED DISCLOSURE MAY CONSTITUTE TRADE SECRET MISAPPROPRIATION IN VIOLATION OF I.C.2.4-2-3.1-1 ET. SEQ. AND OTHER LAWS.

10/18/2021 4:32:20 PM S:\ajc users\aytaylor\Revit Local Files\21 0928 - 1877 - Dumke Womens Gymnastics Facility V20_detached_aytaylorUV5V2.rvt

ALL IDEAS, DESIGNS, ARRANGEMENTS AND PLANS INDICATED OR REPRESENTED BY THIS DRAWING ARE OWNED BY AND THE PROPERTY OF AJC ARCHITECTS PC AND WERE CREATED, EVOLVED, AND DEVELOPED FOR USE ON AND IN CONNECTION WITH THE SPECIFIED PROJECT. NONE OF THE IDEAS, DESIGNS, ARRANGEMENTS OR PLANS INDICATED OR REPRESENTED BY THIS DRAWING MAY BE USED BY OR DISCLOSED TO ANY PERSON, FIRM, OR CORPORATION FOR ANY PURPOSE WHATSOEVER WITHOUT WRITTEN CONSENT OF AJC ARCHITECTS PC. WRITTEN DIMENSIONS ON THESE DRAWINGS SHALL HAVE PRECEDENCE OVER SCALE DIMENSIONS. CONTRACTORS SHALL VERIFY AND BE RESPONSIBLE FOR ALL DIMENSIONS AND CONDITIONS ON THE JOB AND THIS OFFICE MUST BE NOTIFIED OF ANY VARIATION FROM THE DIMENSIONS AND CONDITIONS SHOWN BY THESE DRAWINGS. WARNING: REPRODUCTION HEREOF IS A CRIMINAL OFFENSE UNDER 18 U.S.C. SEC. 506. UNAUTHORIZED DISCLOSURE MAY CONSTITUTE TRADE SECRET MISAPPROPRIATION IN VIOLATION OF UT 13-24-2 AND 13-27-1 ET. SEQ. AND OTHER LAWS.

DOOR & FRAME SCHEDULE

DOOR NO.	DOOR SIZE WIDTH	DOOR SIZE HEIGHT	FIRE RATING	DOOR TYPE	FRAME TYPE	COMMENTS
100	3'-0"	6'-8"		ALFL	2	EXISTING DOOR TO REMAIN. PROTECT. PANIC HARDWARE REQUIRED.
100A	3'-0"	7'-0"		HM	1	EXISTING DOOR TO REMAIN. PROTECT.
100B	3'-0"	7'-0"		HM	1	
100C	3'-0"	7'-0"		ALFL	2	EXISTING DOOR TO REMAIN. PROTECT. PANIC HARDWARE REQUIRED.
100D	3'-0"	7'-0"		HM	1	
100G	3'-6"	8'-0"		ALFL	2	CARD ACCESS. ADA OPENER. PANIC HARDWARE REQUIRED.
102.2	7'-9"	7'-9 7/8"		ALFL	2	EXISTING DOOR TO REMAIN. PROTECT. PANIC HARDWARE REQUIRED.
102.3	7'-9"	7'-9 7/8"		ALFL	2	EXISTING DOOR TO REMAIN. PROTECT. PANIC HARDWARE REQUIRED.
102.4	2'-8"	7'-0"		HMFL	1	
102A	3'-0"	7'-0"		HM	1	
102B	3'-0"	7'-0"		HM	1	
104	3'-0"	7'-0"		HM	1	
106	3'-0"	7'-0"		HM	1	
110A	3'-0"	7'-0"		HM	1	CARD ACCESS. PANIC HARDWARE REQUIRED.
110B	3'-0"	7'-0"		HM	1	PANIC HARDWARE REQUIRED.
110C	3'-6"	9'-4"		ALFL	2	CARD ACCESS.
115	3'-0"	7'-0"		HM	1	
125A	3'-0"	7'-10"		N/A		GLASS SHOWER DOOR.
125B	3'-0"	7'-10"		N/A		GLASS SHOWER DOOR.
130	3'-0"	7'-0"		HM	1	
200.1	3'-0"	7'-0"		HM	1	THIS DOOR IS A PART OF BASE BID AND WILL NOT BE NEEDED IF ADD ALT. #1 IS TAKEN.
200.2	3'-0"	7'-0"		HM	1	THIS DOOR IS A PART OF BASE BID AND WILL NOT BE NEEDED IF ADD ALT. #1 IS TAKEN.
200.3	3'-0"	7'-10"		ALFL	2	THIS DOOR IS A PART OF ADD ALT. #1. PANIC HARDWARE REQUIRED.
200.4	3'-0"	7'-10"		ALFL	2	THIS DOOR IS A PART OF ADD ALT. #1. PANIC HARDWARE REQUIRED.
201.1	3'-0"	8'-0"		HMFL	1	THIS DOOR IS A PART OF ADD ALT. #1.
201.2	22'-0"	8'-0"		FGD		THIS DOOR IS A PART OF ADD ALT. #1.
201.3	14'-0"	8'-0"		BD	N/A	CUSTOM SLIDING 4 PANEL P LAM DOOR
201A	8'-0"	7'-0"		BF	1	THIS DOOR IS A PART OF ADD ALT. #1.
202	3'-0"	8'-0"		ALFL	2	PANIC HARDWARE REQUIRED.
202A	3'-0"	7'-0"		HM	1	EXISTING DOOR TO REMAIN. PROTECT.
202B	3'-0"	7'-0"		HM	1	EXISTING DOOR TO REMAIN. PROTECT.
202F	3'-0"	7'-0"		HM	1	EXISTING DOOR TO REMAIN. PROTECT.
202R	3'-0"	7'-0"		HM	1	
202S	3'-0"	7'-0"		HM	1	
203	3'-3"	8'-0"		ALFL	2	THIS DOOR IS A PART OF ADD ALT. #2. PANIC HARDWARE REQUIRED.
205	3'-0"	7'-10"		ALFL	2	THIS DOOR IS A PART OF ADD ALT. #1.
207	3'-0"	7'-10"		ALFL	2	THIS DOOR IS A PART OF ADD ALT. #1.
209	3'-0"	7'-10"		ALFL	2	THIS DOOR IS A PART OF ADD ALT. #1.
211	3'-0"	7'-10"		ALFL	2	THIS DOOR IS A PART OF ADD ALT. #1.
213	3'-0"	7'-10"		ALFL	2	THIS DOOR IS A PART OF ADD ALT. #1.
215	3'-0"	7'-10"		ALFL	2	THIS DOOR IS A PART OF ADD ALT. #1.

*SEE DOOR HARDWARE SPECIFICATION FOR DOOR HARDWARE GROUPS.

GLAZING TYPES

SYM.	DESCRIPTION
C1	1" CLEAR INSULATED LOW "E" GLAZING
HG	1/2" LAMINATED(MIN. 2 PLIES OF EQUAL THICKNESS), FULLY TEMPERED, LOW IRON GLASS GUARDRAIL. FLAT POLISHED EDGES. TO MEET IBC SEC. 2407.
T1	1" CLEAR INSULATED LOW "E" GLAZING - TEMPERED
T2	1/4" CLEAR TEMPERED GLAZING

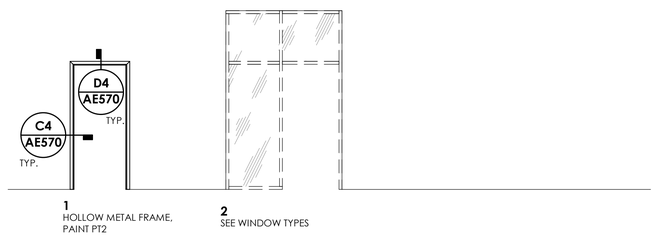

1
HOLLOW METAL FRAME, PAINT PT2

2
SEE WINDOW TYPES

C1 LEGEND - FRAME TYPES
1/4" = 1'-0"

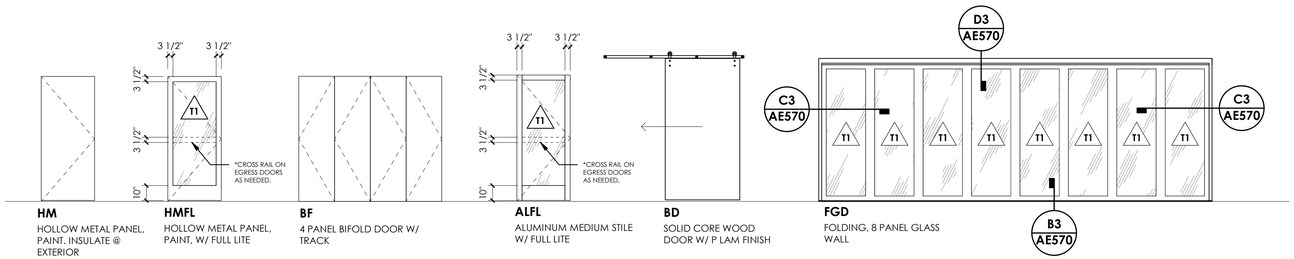

HM
HOLLOW METAL PANEL, PAINT. INSULATE @ EXTERIOR

HMFL
HOLLOW METAL PANEL, PAINT, W/ FULL LITE

BF
4 PANEL BIFOLD DOOR W/ TRACK

ALFL
ALUMINUM MEDIUM STILE W/ FULL LITE

BD
SOLID CORE WOOD DOOR W/ P LAM FINISH

FGD
FOLDING, 8 PANEL GLASS WALL

B1 DOOR TYPES
1/4" = 1'-0"

ARCHITECT 1877
ajc architects
703 east 1700 south
salt lake city, utah 84105
ph: 801.466.8818
fx: 801.466.4411
www.ajcarchitects.com

ARCHITECT / CONSULTANT

STATE OF UTAH
KENT B. RIGBY
No. 135090
05.18.2020
LICENSED ARCHITECT

OWNER INFORMATION

PROJECT DESCRIPTION

DUMKE GYMNASTICS TRAINING CENTER

1825 E. SOUTH CAMPUS DRIVE
SALT LAKE CITY, UT 84112

AHJ STAMP

SHEET NAME:
DOOR SCHEDULE & LEGEND

REVISIONS

MARK	DATE	DESCRIPTION

ISSUE DATA

ISSUE DATE:	10.18.21
ISSUE TYPE:	CD
DRAWN BY:	AT|DG
CHECKED BY:	KR
PROJECT#:	1877

SHEET NUMBER:
AE601

ALL IDEAS, DESIGNS, ARRANGEMENTS AND PLANS INDICATED OR REPRESENTED BY THIS DRAWING ARE OWNED BY AND THE PROPERTY OF AJC ARCHITECTS PC AND WERE CREATED, EVOLVED, AND DEVELOPED FOR USE ON AND IN CONNECTION WITH THE SPECIFIED PROJECT. NONE OF THE IDEAS, DESIGNS, ARRANGEMENTS OR PLANS SHALL BE USED BY OR DISCLOSED TO ANY PERSON, FIRM, OR CORPORATION FOR ANY PURPOSE WHATSOEVER WITHOUT WRITTEN CONSENT OF AJC ARCHITECTS PC. WRITTEN DIMENSIONS ON THESE DRAWINGS SHALL HAVE PRECEDENCE OVER SCALE DIMENSIONS. CONTRACTORS SHALL VERIFY AND BE RESPONSIBLE FOR ALL DIMENSIONS AND CONDITIONS ON THE JOB AND THIS OFFICE MUST BE NOTIFIED OF ANY VARIATION FROM THE DIMENSIONS AND CONDITIONS SHOWN BY THESE DRAWINGS. WARNING: REPRODUCTION HEREOF IS A CRIMINAL OFFENSE UNDER 18 U.S.C. 506. UNAUTHORIZED DISCLOSURE MAY CONSTITUTE TRADE SECRET MISAPPROPRIATION IN VIOLATION OF 17 C.F.R. 240.10B-5.

10/18/2021 4:32:25 PM S:\ajc users\taylor\Revit Local Files\21 0928 - 1877 - Dumke Womens Gymnastics Facility V20_detached_ataylorUV5V2.rvt

1 2 3 4 5

A B C D

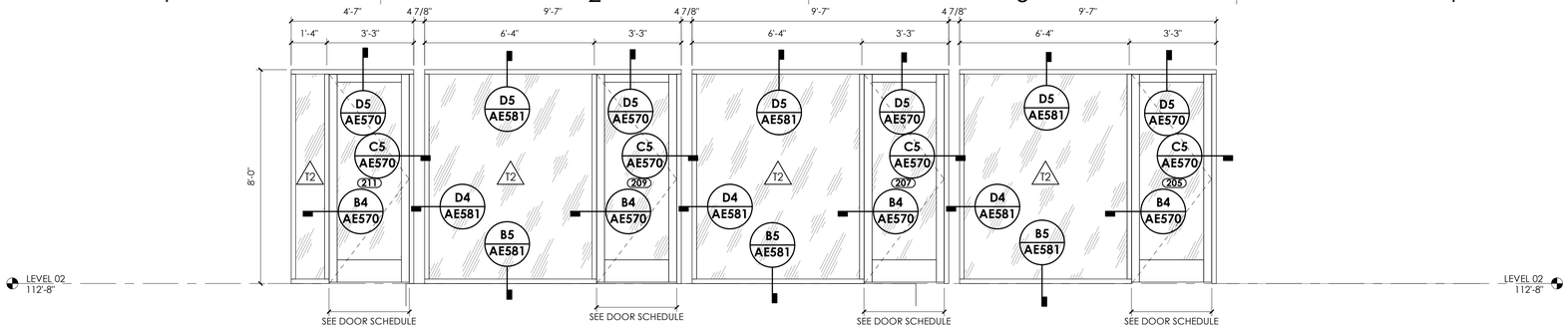

D1 W8 - INTERIOR STOREFRONT
3/8" = 1'-0"

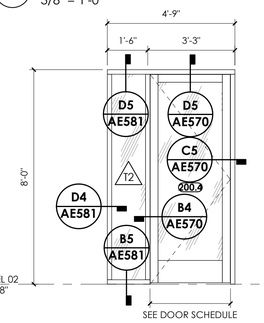

C1 W10 - INTERIOR STOREFRONT
3/8" = 1'-0"

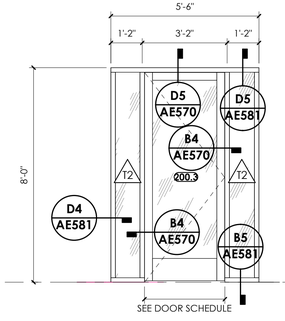

C2 W7 - INTERIOR STOREFRONT
3/8" = 1'-0"

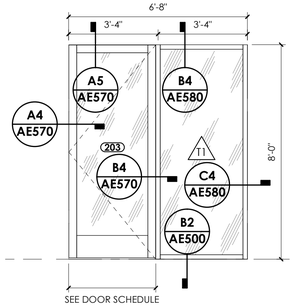

C3 W4 - BALCONY STOREFRONT
3/8" = 1'-0"

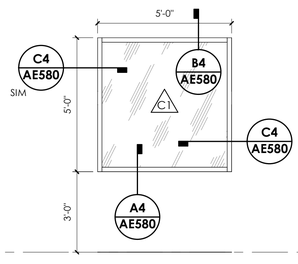

C4 W5 - ALUMINUM STOREFRONT SYSTEM
3/8" = 1'-0"

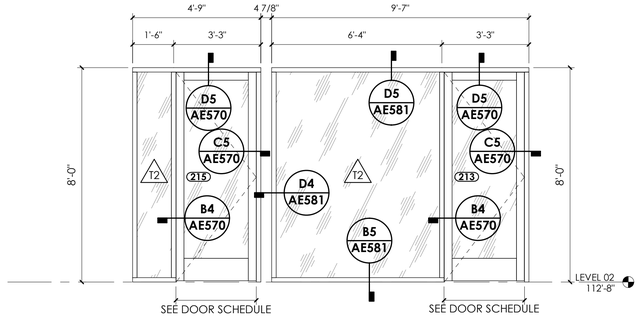

B1 W9 - INTERIOR STOREFRONT
3/8" = 1'-0"

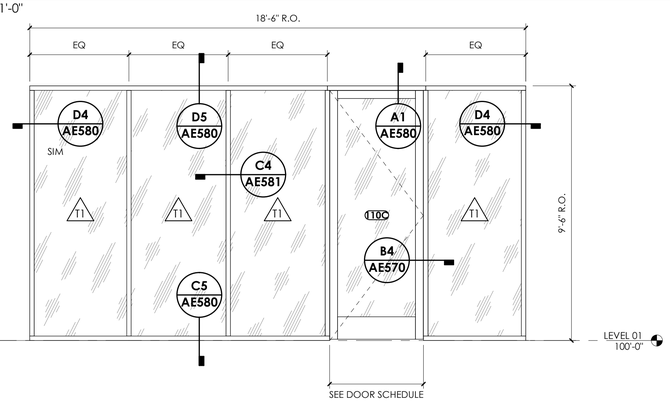

A1 W3 - LOUNGE STOREFRONT
3/8" = 1'-0"

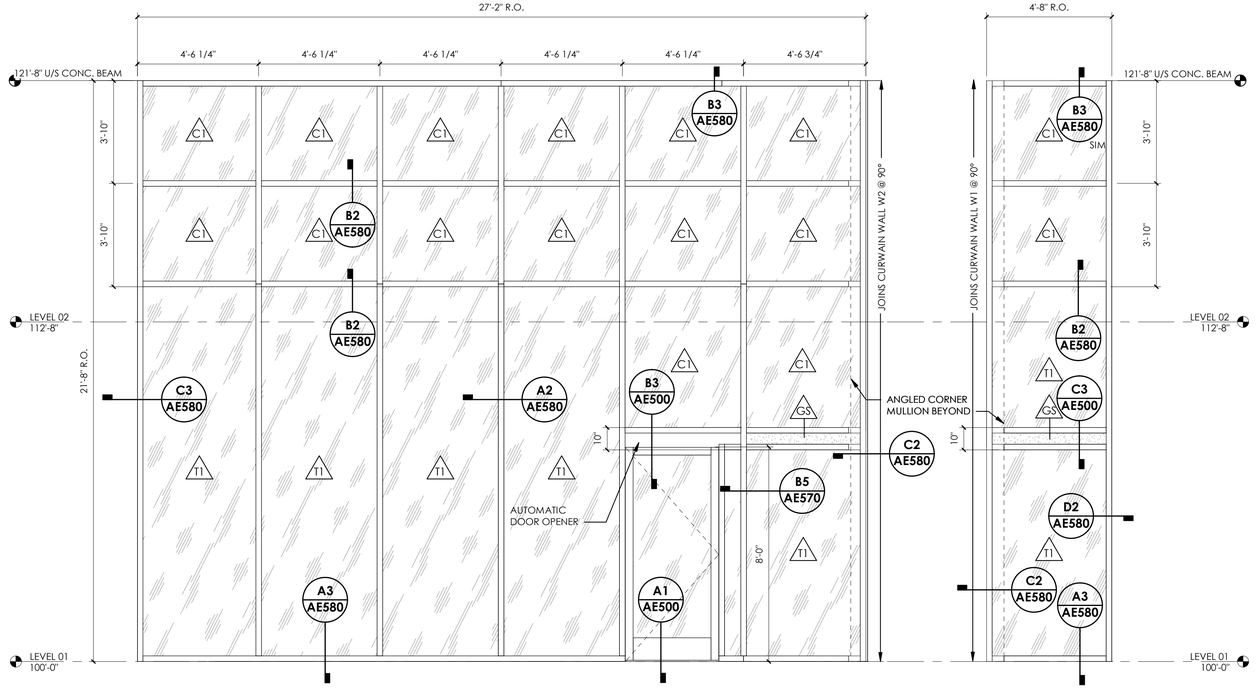

A3 W1 - NORTH CURTAIN WALL
3/8" = 1'-0"

A5 W2 - WEST CURTAIN WALL
3/8" = 1'-0"

GLAZING TYPES

SYM.	DESCRIPTION
C1	1" CLEAR INSULATED LOW "E" GLAZING
HG	1/2" LAMINATED(MIN. 2 PLIES OF EQUAL THICKNESS), FULLY TEMPERED, LOW IRON GLASS GUARDRAIL. FLAT POLISHED EDGES. TO MEET IBC SEC. 2407.
T1	1" CLEAR INSULATED LOW "E" GLAZING - TEMPERED
T2	1/4" CLEAR TEMPERED GLAZING

ARCHITECT 1877
ajc architects
703 east 1700 south
salt lake city, utah 84105
ph: 801.466.8818
fx: 801.466.4411
www.ajcarchitects.com

ARCHITECT / CONSULTANT

STATE OF UTAH
KENT B. RIGBY
No. 135090
05.18.2020
LICENSED ARCHITECT

OWNER INFORMATION

PROJECT DESCRIPTION

DUMKE GYMNASTICS TRAINING CENTER

1825 E. SOUTH CAMPUS DRIVE
SALT LAKE CITY, UT 84112

AHJ STAMP

SHEET NAME:
WINDOW TYPES

REVISIONS

MARK	DATE	DESCRIPTION

ISSUE DATA

ISSUE DATE:	10.18.21
ISSUE TYPE:	CD
DRAWN BY:	AT|DG
CHECKED BY:	KR
PROJECT#:	1877

SHEET NUMBER:
AE610

10/18/2021 4:32:28 PM S:\ajc users\ataylor\Revit Local Files\21 0928 - 1877 - Dumke Womens Gymnastics Facility V20_detached_ataylorUv5V2.rvt

ALL IDEAS, DESIGNS, ARRANGEMENTS AND PLANS INDICATED OR REPRESENTED BY THIS DRAWING ARE OWNED BY AND THE PROPERTY OF AJC ARCHITECTS PC AND WERE CREATED, EVOLVED, AND DEVELOPED FOR USE ON AND IN CONNECTION WITH THE SPECIFIED PROJECT. NONE OF THE IDEAS, DESIGNS, ARRANGEMENTS OR PLANS INDICATED IN OR REPRESENTED BY THIS DRAWING SHALL BE USED BY OR DISCLOSED TO ANY PERSON, FIRM, OR CORPORATION FOR ANY PURPOSE WHATSOEVER WITHOUT WRITTEN CONSENT OF AJC ARCHITECTS PC. WRITTEN DIMENSIONS ON THESE DRAWINGS SHALL HAVE PRECEDENCE OVER SCALE DIMENSIONS. CONTRACTORS SHALL VERIFY AND BE RESPONSIBLE FOR ALL DIMENSIONS AND CONDITIONS ON THE JOB AND THIS OFFICE MUST BE NOTIFIED OF ANY VARIATION FROM THE DIMENSIONS AND CONDITIONS SHOWN BY THESE DRAWINGS. WARNING: REPRODUCTION HEREOF IS A CRIMINAL OFFENSE UNDER FEDERAL LAW PUNISHABLE BY A FINE OF UP TO $250,000 AND IMPRISONMENT OF UP TO 5 YEARS (17 U.S.C. SECS. 506). UNAUTHORIZED DISCLOSURE MAY CONSTITUTE TRADE SECRET MISAPPROPRIATION IN VIOLATION OF UC 24.2.31.1 ET. SEQ. AND OTHER LAWS.

	ACCESSORY SCHEDULE		
PROJECT NAME:			
DUMKE GYMNASTICS TRAINING CENTER			
ROOM NUMBER	ACCESSORY	QUANITY	PROVIDER
100A			
	CLASSIC SERIES - SURFACE MOUNTED SEAT-COVER DISPENSER	1	BOBRICK
	CLASSIC SERIES - SURFACE MOUNTED PAPER TOWEL DISPENSER	1	BOBRICK
	DOUBLE-ROLL TOILET TISSUE DISPENSER	1	BOBRICK
	QUIETDRY SERIES DURADRY SURFACE-MOUNTED HAND DRYER	1	BOBRICK
	COUNTER-MOUNTED SUREFLO AUTOMATIC TOP-FILL BULK LIQUID SOAP DISPENSER	1	BOBRICK
	SURFACE MOUNTED SANITARY NAPKIN DISPOSAL	1	BOBRICK
	CLASSIC SERIES SURFACE-MOUNTED NAPKIN/TAMPON VENDOR	1	BOBRICK
102B			
	CLASSIC SERIES - SURFACE MOUNTED SEAT-COVER DISPENSER	1	BOBRICK
	CLASSIC SERIES - SURFACE MOUNTED PAPER TOWEL DISPENSER	1	BOBRICK
	DOUBLE-ROLL TOILET TISSUE DISPENSER	1	BOBRICK
	QUIETDRY SERIES DURADRY SURFACE-MOUNTED HAND DRYER	1	BOBRICK
	COUNTER-MOUNTED SUREFLO AUTOMATIC TOP-FILL BULK LIQUID SOAP DISPENSER	1	BOBRICK
	SURFACE MOUNTED SANITARY NAPKIN DISPOSAL	1	BOBRICK
	CLASSIC SERIES SURFACE-MOUNTED NAPKIN/TAMPON VENDOR	1	BOBRICK
	ADA GRAB BAR SET, PEENED; B-6806.99 X 18, B-6806.99 X 36, B-6806.99 X 42	1	BOBRICK
	24" ADA SHOWER GRAB BAR, PEENED; B-5806.99 X 24	1	BOBRICK
	30" ADA SHOWER GRAB BAR, PEENED; B-5806.99 X 30	1	BOBRICK
125			
	CLASSIC SERIES - SURFACE MOUNTED SEAT-COVER DISPENSER	3	BOBRICK
	CLASSIC SERIES - SURFACE MOUNTED PAPER TOWEL DISPENSER	1	BOBRICK
	PARTITION-MOUNTED SANITARY NAPKIN DISPOSAL	3	BOBRICK
	DOUBLE-ROLL TOILET TISSUE DISPENSER	3	BOBRICK
	QUIETDRY SERIES DURADRY SURFACE-MOUNTED HAND DRYER	1	BOBRICK
	COUNTER-MOUNTED SUREFLO AUTOMATIC TOP-FILL BULK LIQUID SOAP DISPENSER	3	BOBRICK
	CLASSIC SERIES SURFACE-MOUNTED NAPKIN/TAMPON VENDOR	3	BOBRICK
	ADA GRAB BAR SET, PEENED; B-6806.99 X 18, B-6806.99 X 36, B-6806.99 X 42	1	BOBRICK
	24" ADA SHOWER GRAB BAR, PEENED; B-5806.99 X 24	1	BOBRICK
	30" ADA SHOWER GRAB BAR, PEENED; B-5806.99 X 30	1	BOBRICK
202R			
	CLASSIC SERIES - SURFACE MOUNTED SEAT-COVER DISPENSER	1	BOBRICK
	CLASSIC SERIES - SURFACE MOUNTED PAPER TOWEL DISPENSER	1	BOBRICK
	DOUBLE-ROLL TOILET TISSUE DISPENSER	1	BOBRICK
	QUIETDRY SERIES DURADRY SURFACE-MOUNTED HAND DRYER	1	BOBRICK
	COUNTER-MOUNTED SUREFLO AUTOMATIC TOP-FILL BULK LIQUID SOAP DISPENSER	1	BOBRICK
	SURFACE MOUNTED SANITARY NAPKIN DISPOSAL	1	BOBRICK
	CLASSIC SERIES SURFACE-MOUNTED NAPKIN/TAMPON VENDOR	1	BOBRICK
	ADA GRAB BAR SET, PEENED; B-6806.99 X 18, B-6806.99 X 36, B-6806.99 X 42	1	BOBRICK
202S			
	CLASSIC SERIES - SURFACE MOUNTED SEAT-COVER DISPENSER	1	BOBRICK
	CLASSIC SERIES - SURFACE MOUNTED PAPER TOWEL DISPENSER	1	BOBRICK
	DOUBLE-ROLL TOILET TISSUE DISPENSER	1	BOBRICK
	QUIETDRY SERIES DURADRY SURFACE-MOUNTED HAND DRYER	1	BOBRICK
	COUNTER-MOUNTED SUREFLO AUTOMATIC TOP-FILL BULK LIQUID SOAP DISPENSER	1	BOBRICK
	SURFACE MOUNTED SANITARY NAPKIN DISPOSAL	1	BOBRICK
	CLASSIC SERIES SURFACE-MOUNTED NAPKIN/TAMPON VENDOR	1	BOBRICK
	ADA GRAB BAR SET, PEENED; B-6806.99 X 18, B-6806.99 X 36, B-6806.99 X 42	1	BOBRICK

BASIS OF DESIGN INDICATED BELOW. SEE SPECIFICATIONS. SUBSTITUTIONS MUST BE APPROVED BY ARCHITECT.

FINISH LEGEND

SYMBOL	DESCRIPTION	MANUFACTURER	STYLE/COLOR
CASEWORK			
P1	HINY HIDERS,WARM TONE COLOR COLLECTION,COLOR LINEN SMOOTH FINISH.	SCRANTON PRODUCTS	FLOOR MOUNT BATHROOM PARTITIONS.
PL1	WOOD GRAIN PLASTIC LAMINATE:CONTEMPORARY MAPLE W485 VL	ARBORITE	ALL VERTICAL CASEWORK
QZ1	QUARTZ COMPOSITE COUNTERTOPS	DALTILE	AMERICAN RESERVE,OQ42 FREEDOM CALACATTA
CEILING			
AC1	2'X4' ACOUSTIC TILE,CALLA,SQUARE LAY-IN, 15/16, COMPATIBLE W/TECHZONE CEILING SYSTEM,COLOR:2824 WHITE	ARMSTRONG WORLD INDUSTRIES, INC.	LAY IN ACT
EXTERIOR			
	EXPOSED EXTERIOR STEEL - GALVANIZED	SEE SPECS	HIGH PERFORMANCE EXTERIOR PAINT; SEE PT4
B	ATLAS BRICK	INTERSTATE BRICK	4"X8"X16" ATLAS BRICK - BAJA BROWN TO MATCH EXISTING
C1	ARCHITECTURAL CONCRETE	SEE SPECS	
C2	BOARD FORMED CONCRETE WALL	SEE SPECS	
FT3	COLORBODY PORCELAIN,COLOR ROCK EV04,FINISH:TEXTURED	DALTILE	SIZE:24" X 48"
MF1	EXTERIOR METAL FLASHING - COLOR #1	SEE SPECS	
PV	PORCELAIN PAVER SYSTEM	TILETECH PAVER SYSTEM	24"X24", CEMENT SERIES: CEMENT CEMENTO
FLOOR			
CONC1	TROWEL FINISH, CLEAR SEALED CONCRETE FLOOR	SEE SPECS	
CT1	MODULAR CARPET TILE - FIELD COLOR.	MILLIKEN	COLLECTION:MAJOR FRQUENCY ONE,DESIGN NAME:DISTORTION,COLOUR NAME:DTN209-118 TREMOR
CT2	MODULAR CARPET TILE - ACCENT COLOR	MILLIKEN	COLLECTION:MAJOR FREQUENCY ONE,DESIGN NAME:VIBRATION,COLOUR NAME:VBN60-79-27 RUCKUS
CT3	WALK OFF MAT,COLOR TBD	MILLIKEN	TBD
FT1	PORCELAIN FLOOR TILE,GROUT:MAPEI,COLOR #14 BISCUIT	DALTILE	KEYSTONES,COLOR:URBAN PUTTY D161,EPOXY GROUT
FT2	PORCELAIN FLOOR TILE,GROUT:MAPEI,COLOR #14 BISCUIT	DALTILE	CAESAR REVIVE,VANILLA 8"x40",EPOXY GROUT
LVT1	LAMINATED WOOD FLOOR	MILLIKEN	COLLECTION:NATURAL,DESIGN NAME:PIKE,COLOUR NAME:PIK144 CLOUD
RF1	RUBBER FLOOR.	PLAE	13MM 905 CHARCOAL
GLAZING			
C1	1" CLEAR INSULATED LOW "E" GLAZING		
HG	1/2" LAMINATED(MIN. 2 PLIES OF EQUAL THICKNESS), FULLY TEMPERED, LOW IRON GLASS GUARDRAIL, FLAT POLISHED EDGES, TO MEET IBC SEC. 2407.		
T1	1" CLEAR INSULATED LOW "E" GLAZING - TEMPERED		
T2	1/4" CLEAR TEMPERED GLAZING		
MISC			
3M1	3M FILM, CUSTOM COLOR RED	3M	FINISH TBD
3M2	3M FILM, CUSTOM PATTERN,CONF. RM/OFFICES	3M	FINISH TBD
ALM	BLACK ANODIZED ALUM.		
B1	4" RUBBER BASE,COLOR:123 CHARCOAL WITH STANDARD TOE BASE 5/8"	ROPPE	-
B2	DILEX AHK,COVE BASE	SCHLUTER	FINISH TBD
B3	4",EXHIBITION EX01 UNPOL	DALTILE	-
B4	4" BRUSHED ALUMINUM BASE	ELITE-EXPRESSIONS	-
PAINT			
PT1	SW 7566 WEST HIGHLAND WHITE	SHERWIN WILLIAMS	USE EPOXY IN WET AREAS
PT2	TBD	SHERWIN WILLIAMS	ALL DOOR AND WINDOW FRAMES
PT3	SW 7671 ON THE ROCKS,ACCENT	SHERWIN WILLIAMS	SOFFITS,OTHER LOCATIONS,SEE ELEVATIONS.
PT7	PAINT - EXPOSED EXTERIOR STEEL	SHERWIN WILLIAMS	
WALL			
TR1	FINEC WALL TRIM	SCHLUTER	FINISH TBD
WT2	S701 MAKAU BLACK STACKED STONE	DALTILE	ACCENT WALL,KITCHEN
WT5	EXIBITION EX01 UNPOL,GROUT:MAPEI,COLOR #14 BISCUIT	DALTILE	-
WT6	6MM PANORAMIC PANEL,PORCELAIN LARGE FORMAT TILE,63"X126" RECTIFIED SLAB,MORTAR,COLOR:MANOR WHITE CM 118	DALTILE	ELEVATOR WALLS,COORDINATE WITH ARCHITECT FOR SIZING.

ARCHITECT 1877

ajc architects

703 east 1700 south
salt lake city, utah 84105
ph: 801.466.8818
fx: 801.466.4411
www.ajcarchitects.com

ARCHITECT / CONSULTANT

STATE OF UTAH
KENT B. RIGBY
No. 135090
05.18.2020
LICENSED ARCHITECT

OWNER INFORMATION

PROJECT DESCRIPTION

DUMKE GYMNASTICS TRAINING CENTER

1825 E. SOUTH CAMPUS DRIVE
SALT LAKE CITY, UT 84112

AHJ STAMP

SHEET NAME:

FINISH & ACCESSORY SCHEDULE

REVISIONS

MARK	DATE	DESCRIPTION

ISSUE DATA

ISSUE DATE:	10.18.21
ISSUE TYPE:	CD
DRAWN BY:	AT|DG
CHECKED BY:	KR
PROJECT#:	1877

SHEET NUMBER:

AE620

ALL IDEAS, DESIGNS, ARRANGEMENTS AND PLANS INDICATED OR REPRESENTED BY THIS DRAWING ARE OWNED BY, AND THE PROPERTY OF, AJC ARCHITECTS PC, AND WERE CREATED, EVOLVED, AND DEVELOPED FOR USE ON, AND IN CONNECTION WITH, THE SPECIFIED PROJECT. NONE OF THE IDEAS, DESIGNS, ARRANGEMENTS OR PLANS INDICATED OR REPRESENTED BY THIS DRAWING MAY BE USED BY, OR DISCLOSED TO, ANY PERSON, FIRM, OR CORPORATION FOR ANY PURPOSE WHATSOEVER WITHOUT WRITTEN CONSENT OF AJC ARCHITECTS PC. WRITTEN DIMENSIONS ON THESE DRAWINGS SHALL HAVE PRECEDENCE OVER SCALE DIMENSIONS. CONTRACTORS SHALL VERIFY AND BE RESPONSIBLE FOR ALL DIMENSIONS AND CONDITIONS ON THE JOB AND THIS OFFICE MUST BE NOTIFIED OF ANY VARIATION FROM THE DIMENSIONS AND CONDITIONS SHOWN BY THESE DRAWINGS. WARNING: REPRODUCTION HEREOF IS A CRIMINAL OFFENSE UNDER 18 U.S.C. 506; UNAUTHORIZED DISCLOSURE MAY CONSTITUTE TRADE SECRET MISAPPROPRIATION IN VIOLATION OF 17 C.F.R. 24.2-31.1, ET. SEQ. AND OTHER LAWS.

10/18/2021 4:32:29 PM S:\ajc users\taylor\Revit Local Files\21 0928 - 1877 - Dumke Womens Gymnastics Facility V20_detached_ataylorUv5V2.rvt

A1 INTERIOR SIGNAGE TYPE RR
3" = 1'-0"

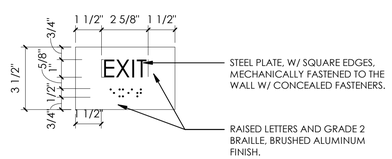

A2 INTERIOR SIGNAGE TYPE EX
3" = 1'-0"

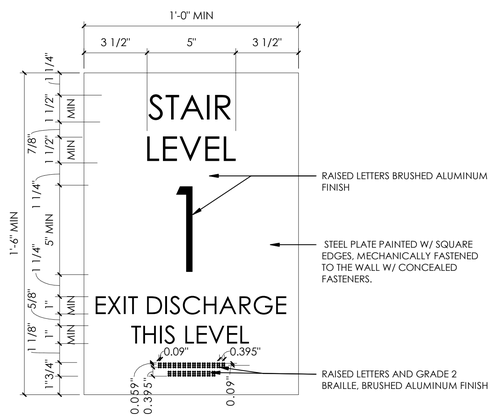

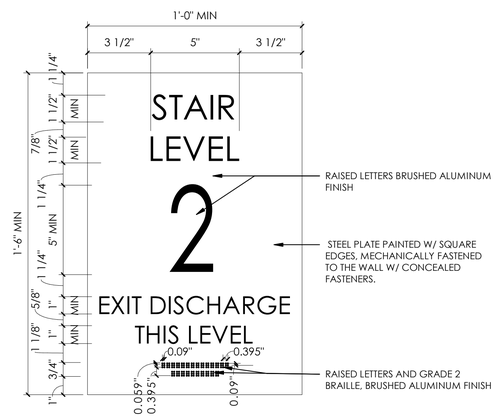

A3 INTERIOR SIGNAGE TYPE S
3" = 1'-0"

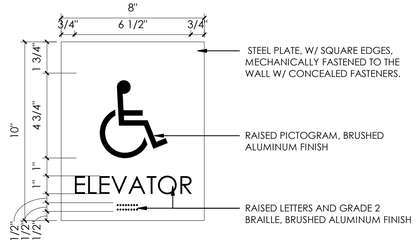

B5 INTERIOR SIGNAGE TYPE EL
3" = 1'-0"

ARCHITECT 1877
ajc architects
703 east 1700 south
salt lake city, utah 84105
ph: 801.466.8818
fx: 801.466.4411
www.ajcarchitects.com

ARCHITECT / CONSULTANT

STATE OF UTAH
KENT B. RIGBY
No. 135090
05.18.2020
LICENSED ARCHITECT

OWNER INFORMATION

PROJECT DESCRIPTION

DUMKE GYMNASTICS TRAINING CENTER

1825 E. SOUTH CAMPUS DRIVE
SALT LAKE CITY, UT 84112

AHJ STAMP

SHEET NAME:
SIGNAGE DETAILS

REVISIONS

MARK	DATE	DESCRIPTION

ISSUE DATA

ISSUE DATE:	10.18.21
ISSUE TYPE:	CD
DRAWN BY:	AT|DG
CHECKED BY:	KR
PROJECT#:	1877

SHEET NUMBER:

AE700

ALL IDEAS, DESIGNS, ARRANGEMENTS AND PLANS INDICATED OR REPRESENTED BY THIS DRAWING ARE OWNED BY AND THE PROPERTY OF AJC ARCHITECTS PC AND WERE CREATED, EVOLVED, AND DEVELOPED FOR USE ON AND IN CONNECTION WITH THE SPECIFIED PROJECT. NONE OF THE IDEAS, DESIGNS, ARRANGEMENTS OR PLANS SHALL BE USED BY OR DISCLOSED TO ANY PERSON, FIRM, OR CORPORATION FOR ANY PURPOSE WHATSOEVER WITHOUT WRITTEN CONSENT OF AJC ARCHITECTS PC. WRITTEN DIMENSIONS ON THESE DRAWINGS SHALL HAVE PRECEDENCE OVER SCALE DIMENSIONS. CONTRACTORS SHALL VERIFY AND BE RESPONSIBLE FOR ALL DIMENSIONS AND CONDITIONS ON THE JOB AND THIS OFFICE MUST BE NOTIFIED OF ANY VARIATION FROM THE DIMENSIONS AND CONDITIONS SHOWN BY THESE DRAWINGS. WARNING: REPRODUCTION HEREOF IS A CRIMINAL OFFENCE UNDER 18 U.S.C. SEC. 506. UNAUTHORIZED DISCLOSURE MAY CONSTITUTE TRADE SECRET MISAPPROPRIATION IN VIOLATION OF IC-24-2-3-01 ET. SEQ. AND OTHER LAWS.

10/6/2021 2:55:38 PM C:\Users\cld\Documents\20191093 MECH Central_cldUPA79.rvt

SYMBOL LEGEND

SYMBOL	DESCRIPTION
VALVES, METERS, AND GAUGES	
01	SHUT OFF VALVE
02	GATE VALVE
03	CHECK VALVE
04	AUTO 2-WAY VALVE
05	AUTO 3-WAY VALVE
06	GLOBE VALVE
07	BALL VALVE
08	RELIEF VALVE
10	PRESSURE REDUCING VALVE
11	BUTTERFLY VALVE
12	SOLENOID VALVE
13	ANGLE VALVE
15	BALANCING OR PLUG COCK
16	FLOW SETTER
17	EXPANSION VALVE (REFRIG.)
18	GAS COCK
20	STRAINER
21	GAUGE COCK
22	FLEXIBLE CONNECTION
23	PRESSURE GAUGE
24	THERMOMETER
25	VICTUALIC COUPLING
26	REDUCER CONCENTRIC
27	REDUCER ECCENTRIC
28	REFRIGERANT SITE GLASS
29	REFRIGERANT STRAINER
30	REFRIGERANT FILTER DRIER
31	90 DEG ELBOW UP
32	90 DEG ELBOW DOWN
33	90 DEG TEE UP
34	90 DEG TEE DOWN
35	UNION
36	CAPPED PIPE
37	ANCHOR
HVAC SYMBOLS	
T	THERMOSTAT
S	TEMPERATURE SENSOR

DEFINITIONS

NOTE: ALL DEFINITIONS MAY NOT BE USED.

INDICATED: THE TERM "INDICATED" REFERS TO GRAPHIC REPRESENTATIONS, NOTES, OR SCHEDULES ON THE DRAWINGS, OTHER PARAGRAPHS OR SCHEDULES IN THE SPECIFICATIONS, AND SIMILAR REQUIREMENTS IN THE CONTRACT DOCUMENTS. WHERE TERMS SUCH AS "SHOWN", "NOTED", "SCHEDULED", AND "SPECIFIED" ARE USED, IT IS TO HELP THE READER LOCATE THE REFERENCE, NO LIMITATION ON LOCATION IS INTENDED.

DIRECTED: TERMS SUCH AS "DIRECTED", "REQUESTED", AUTHORIZED", "SELECTED", "APPROVED", "REQUIRED", AND "PERMITTED" MEAN "DIRECTED BY THE ENGINEER", "REQUESTED BY THE ENGINEER", AND SIMILAR PHRASES.

APPROVED: THE TERM "APPROVED", WHERE USED IN CONJUNCTION WITH THE ENGINEER'S ACTION ON THE CONTRACTOR'S SUBMITTALS, APPLICATIONS, AND REQUESTS, IS LIMITED TO THE ENGINEER'S DUTIES AND RESPONSIBILITIES AS STATED IN GENERAL AND SUPPLEMENTARY CONDITIONS.

FURNISH: THE TERM "FURNISH" IS USED TO MEAN "SUPPLY AND DELIVER TO THE PROJECT SITE, READY FOR UNLOADING, UNPACKING, ASSEMBLY, INSTALLATION, AND SIMILAR OPERATIONS."

INSTALL: THE TERM "INSTALL" IS USED TO DESCRIBE OPERATIONS AT PROJECT SITE INCLUDING THE ACTUAL "UNLOADING, UNPACKING, ASSEMBLY, ERECTION, PLACING, ANCHORING, APPLYING, WORKING TO DIMENSION, FINISHING, CURING, PROTECTING, CLEANING, AND SIMILAR OPERATIONS."

PROVIDE: THE TERM "PROVIDE" MEANS "TO FURNISH AND INSTALL, COMPLETE AND READY FOR THE INTENDED USE."

INSTALLER: AN "INSTALLER" IS THE CONTRACTOR OR AN ENTITY ENGAGED BY THE CONTRACTOR, EITHER AS AN EMPLOYEE, SUBCONTRACTOR, OR SUB-SUBCONTRACTOR, FOR PERFORMANCE OF A PARTICULAR CONSTRUCTION ACTIVITY, INCLUDING INSTALLATION, ERECTION, APPLICATION, AND SIMILAR OPERATIONS. INSTALLERS ARE REQUIRED TO BE EXPERIENCED IN THE OPERATIONS THEY ARE ENGAGED TO PERFORM.

SYMBOL LEGEND

SYMBOL	DESCRIPTION
DUCT WORK	

SINGLE LINE	DOUBLE LINE	DESCRIPTION
		RECTANGULAR SUPPLY DUCT UP
		RECTANGULAR SUPPLY DUCT DOWN
		RECTANGULAR RETURN DUCT UP
		RECTANGULAR RETURN DUCT DOWN
		RECTANGULAR EXHAUST DUCT UP
		RECTANGULAR EXHAUST DUCT DOWN
		ROUND DUCT UP
		ROUND DUCT DOWN
		90° RECTANGULAR ELBOW WITH TURNING VANES
		90° RADIUS ELBOW R=1.5
		DUCT SIZE OR SHAPE TRANSITION
		OPPOSED BLADE BALANCING DAMPER (O.B.D.) IN RECT DUCT
		BUTTERFLY BALANCING DAMPER IN ROUND DUCTS
		COMBINATION TEE
		SQUARE OR RECTANGULAR CEILING DIFFUSER
		ROUND CEILING DIFFUSER
		SIDEWALL REGISTER SUPPLY OR RETURN
		ROUND FLEXIBLE DUCT
		RETURN GRILLE
		EXHAUST GRILLE
		FIRE SMOKE DAMPER
		FIRE DAMPER
FC	FC	FLEXIBLE CONNECTION
		DUCT TO BE REMOVED

SYMBOL LEGEND

SYMBOL	DESCRIPTION
REFERENCE LINES AND SYMBOLS	
# / SHEET	DETAIL INDICATOR: # INDICATES DETAIL NUMBER, SHEET INDICATES DRAWING SHEET WHERE DETAIL IS SHOWN.
# / SHEET	ELEVATION OR SECTION INDICATOR, EXTERIOR: # INDICATES ELEVATION OR SECTION NUMBER, SHEET INDICATES DRAWING SHEET WHERE ELEVATION OR SECTION IS SHOWN.
# / SHEET	ELEVATION OR SECTION INDICATOR, INTERIOR: # INDICATES ELEVATION OR SECTION NUMBER, SHEET INDICATES DRAWING SHEET WHERE ELEVATION OR SECTION IS SHOWN.
100	SPACE NUMBER
1	KEYNOTE INDICATOR
	REVISION INDICATOR
	EQUIPMENT INDICATOR
	PLUMBING FIXTURE INDICATOR
TYPE / CFM / SIZE	DIFFUSER/GRILLE INDICATOR
TYPE / SIZE	DIFFUSER/GRILLE INDICATOR
	BREAK, STRAIGHT
	BREAK, ROUND
MATCH LINE / SEE XX/X-XXX	MATCHLINE INDICATOR
	HIDDEN FEATURES LINE: HIDDEN, THIN LINE
	CONTRACT LIMIT LINE: DASHDOT, WIDE LINE
	NEW CONNECTION TO EXISTING
	POINT OF DEMOLITION

MECHANICAL GENERAL NOTES

1 THE MECHANICAL DRAWINGS SHOW THE GENERAL DESIGN, ARRANGEMENT & EXTENT OF THE MECHANICAL SYSTEM. BECAUSE OF THE SMALL SCALE OF THE DRAWINGS, THESE DRAWINGS DO NOT SHOW ALL OFFSETS, BENDS OR ELBOWS NECESSARY FOR THE COMPLETE INSTALLATION IN THE SPACE PROVIDED. CONTRACTOR SHALL MAKE SUCH SLIGHT ALTERATIONS AS MAY BE NECESSARY TO MAKE THE SYSTEM COMPLETE & OPERATIONAL IN ACCORDANCE WITH THE DESIGN INTENT.

MAJOR DEVIATIONS SUCH AS CHANGES IN COMPONENT SIZES, WEIGHTS, QUANTITIES OR MATERIAL REQUIRE PRIOR APPROVAL BY THE ARCHITECT.

2 THE DRAWINGS & SPECIFICATIONS HAVE BEEN PREPARED TO SUPPLEMENT EACH OTHER & SHALL BE INTERPRETED AS AN INTEGRAL UNIT WITH THE ITEMS SHOWN ON ONE & NOT THE OTHER BEING FURNISHED & INSTALLED AS THOUGH SHOWN & CALLED OUT IN BOTH.

3 THE ENTIRE MECHANICAL INSTALLATION SHALL CONFORM TO THE REQUIREMENTS OF THE MOST RECENTLY ADOPTED BUILDING CODES, MECHANICAL CODE, PLUMBING CODE, ELECTRICAL CODE, & ALL OTHER APPLICABLE CITY, COUNTY, STATE, & FEDERAL CODES & REGULATIONS IN EFFECT.

4 THE ENTIRE MECHANICAL INSTALLATION SHALL CONFORM TO ANY CODES, RULES, REGULATIONS & REQUIREMENTS OF THE BUILDING OWNER.

5 PRIOR TO FABRICATION & INSTALLATION OF ANY MECHANICAL COMPONENT THE CONTRACTOR SHALL COORDINATE THE INSTALLATION OF ALL MECHANICAL WORK WITH ALL OTHER BUILDING TRADES, INCLUDING BUILDING TRADES HIRED DIRECTLY BY THE OWNER. WHERE CONFLICTS MAY OCCUR, THEY SHALL BE RESOLVED PRIOR TO INSTALLATION.

6 THE SPACE ABOVE ALL CEILINGS IS LIMITED. CAREFUL COORDINATION IS REQUIRED WITH ALL TRADES BEFORE ANY PIPE, DUCT, OR EQUIPMENT IS ORDERED & OR INSTALLED. ANY CONFLICTS &/OR CHANGES FOUND DURING INSTALLATION THAT RESULTS FROM THE LACK OF COORDINATION BY THE CONTRACTOR DURING THE SHOP DRAWING PROCESS ARE THE RESPONSIBILITY OF THE CONTRACTOR.

7 ALL MECHANICAL INFORMATION IS NOT SHOWN ON THE MECHANICAL DRAWINGS. THE CONTRACTOR SHALL BE RESPONSIBLE FOR COORDINATING ALL INFORMATION ON ALL OTHER CONSTRUCTION DOCUMENT.

8 THE CONTRACTOR SHALL BE RESPONSIBLE TO REVIEW & USE, WHERE APPROPRIATE, ALL THE MECHANICAL DETAILS SHOWN ON THE DRAWINGS. DETAILS MAY OR MAY NOT BE CALLED OUT ON THE DRAWINGS WITH SYMBOLS OR KEYED NOTES. ANY CHANGES RESULTING FROM FAILURE TO INSTALL THE MECHANICAL SYSTEM WITHOUT USING THE INCLUDED DETAILS SHALL BE THE RESPONSIBILITY OF THE CONTRACTOR.

9 THE STRUCTURE SHOWN ON ALL DETAILS MAY OR MAY NOT PERTAIN TO A PORTION OR ANY PORTION OF THE BUILDING. COORDINATE ALL MOUNTING REQUIREMENTS WITH ARCHITECTURAL & STRUCTURAL DRAWINGS.

10 ANY PART OF THE MECHANICAL INSTALLATION THAT FAILS, IS UNFIT, OR BECOMES DAMAGED DURING CONSTRUCTION SHALL BE REPAIRED OR REPLACED BY THE CONTRACTOR AT NO ADDITIONAL COST TO THE OWNER.

11 SEE ARCHITECTURAL REFLECTED CEILING PLAN FOR EXACT LOCATION OF ALL CEILING DIFFUSERS & GRILLES.

12 CONTRACTOR SHALL OPERATE THE SYSTEM & DEMONSTRATE ALL ASPECTS OF THE SYSTEM TO THE ENGINEER &/OR OWNER TO PROVE ALL SYSTEMS ARE OPERATIONAL.

13 DURING CONSTRUCTION, THE CONTRACTOR SHALL MAINTAIN A SET OF AS-BUILT REDLINED RECORD DRAWING AT THE PROJECT SITE. ALL CHANGES IN LAYOUT, ROUTING, EQUIPMENT, COMPONENTS, & ACCESSORIES SHALL BE RECORDED. THESE REDLINED DRAWINGS SHALL BE GIVEN TO THE ARCHITECT AFTER THE FINAL INSPECTION IN ACCORDANCE WITH SPECIFICATIONS.

ABBREVIATIONS

NOTE: ALL ABBREVIATIONS MAY NOT BE USED.

(E)	EXISTING
(F)	FUTURE
AD	ACCESS DOOR
AIR COND	AIR CONDITION(-ING,-ED)
APD	AIR PRESSURE DROP
BD	BALANCING DAMPER
BHP	BRAKE HORSE POWER
BTU	BRITISH THERMAL UNIT
BTUH	BTU/HOUR
CD	CONDENSATE DRAIN
CFH	CUBIC FEET PER HOUR
CFM	CUBIC FEET PER MINUTE
CLG	COOLING
COND	CONDENS(-ER, -ING, -ATION)
CV	CONTROL VALVE
DB	DRY BULB TEMPERATURE
DCW	DOMESTIC COLD WATER
DHW	DOMESTIC HOT WATER
DHWR	DOMESTIC HOT WATER RECIRC
DIA	DIAMETER
DP	PRESSURE DROP OR DIFFERENCE
EA	EXHAUST AIR
EER	ENERGY EFFICIENCY RATIO
EFF	EFFICIENCY
ELEC	ELECTRIC
ELEV	ELEVATION
ENT	ENTERING
EVAP	EVAPORAT(-E, -ING, -ED, -OR)
EWT	ENTERING WATER TEMPERATURE
EXT	EXTERNAL
FD	FIRE DAMPER
FLA	FULL LOAD AMPS
FPM	FEET PER MINUTE
FPS	FEET PER SECOND
FSD	FIRE SMOKE DAMPER
GAL	GALLON(S)
GPH	GALLONS PER HOUR
GPM	GALLONS PER MINUTE
HD	HEAD
HP	HORSEPOWER
HR	HOUR
HT	HEIGHT
HTG	HEATING
HZ	HERTZ (FREQUENCY)
ID	INSIDE DIAMETER
IN	INCH
KW	KILOWATT
LAT	LEAVING AIR TEMPERATURE
LBS	POUNDS
LVG	LEAVING
LWT	LEAVING WATER TEMPERATURE
MBH	THOUSAND BTU PER HOUR
MCA	MINIMUM CIRCUIT AMPS
MFR	MANUFACTUR(-ER, -ED)
NC	NOISE CRITERIA
NIC	NOT IN CONTRACT
NO	NORMALLY OPEN
NTS	NOT TO SCALE
OA	OUTSIDE AIR
OD	OUTSIDE DIAMETER
OZ	OUNCE
PD	PRESSURE DROP OR DIFFERENCE
PH	PHASE
PPM	PARTS PER MILLION
PSF	POUNDS PER SQUARE FOOT
PSI	POUNDS PER SQUARE INCH
PSIA	PSI ABSOLUTE
PSIG	PSI GAUGE
RA	RETURN AIR
RECIRC	RECIRCULATE
REFR	REFRIGERATION
REQD	REQUIRED
RPM	REVOLUTIONS PER MINUTE
SA	SUPPLY AIR
SCFM	STANDARD CUBIC FEET PER MINUTE
SCW	SOFT COLD WATER
SP	STATIC PRESSURE
SPEC(S)	SPECIFICATION(S)
SQ	SQUARE
SS	SOIL, WASTE
STD	STANDARD
TD	TEMP. DROP OR DIFF.
TEMP	TEMPERATURE
THERM	THERMAL
TOT	TOTAL
TSTAT	THERMOSTAT
V	VOLT
V	VENT
VEL	VELOCITY
VENT	VENT, VENTILATION
VERT	VERTICAL
VFD	VARIABLE FREQUENCY DRIVE
VOL	VOLUME
WB	WET BULB TEMP
WC	WATER COLUMN
WG	WATER GAUGE
WPD	WATER PRESSURE DROP
WT	WEIGHT
WTR	WATER

GENERAL EQUIPMENT NOTES

1 ALL CAPACITIES ARE AT JOB SITE CONDITIONS & ARE MINIMUM CAPACITY.

2 ALL MECHANICAL EQUIPMENT SHALL BE INSTALLED TO CONFORM WITH LOCAL SEISMIC REQUIREMENTS & THE REQUIREMENTS OF THESE CONSTRUCTION DOCUMENTS.

3 VERIFY ALL REQUIRED SERVICE CONNECTIONS, INCLUDING ELECTRICAL CHARACTERISTICS FOR ALL EQUIPMENT PRIOR TO ORDERING EQUIPMENT.

4 ALL EQUIPMENT SHALL BE INDEPENDENTLY SUPPORTED FROM STRUCTURAL MEMBERS.

5 ALL EQUIPMENT SHALL BE INSTALLED IN ACCORDANCE WITH MANUFACTURER'S WRITTEN INSTALLATION INSTRUCTIONS.

6 ALL SIMILAR EQUIPMENT SHALL BE OF THE SAME MANUFACTURER.

7 AIR INLETS & OUTLETS SHALL BE OF THE SAME MANUFACTURER.

8 THE CONTRACTOR SHALL BE RESPONSIBLE FOR THE HVAC EQUIPMENT CHECK-IN, SAFEKEEPING, & DAMAGE.

MECHANICAL GENERAL NOTES

1. ALL EQUIPMENT TO BE SELECTED BASED OFF OF SITE INFORMATION, INCLUDING CURBS EQUAL TO OR GREATER THAN DESIGN SNOW DEPTH. ELEVATION: 5000' SDB: 97°F SWB: 62°F WDB: 0°F DESIGN SNOW DEPTH: 18"
2. ALL RECTANGULAR SUPPLY AND RETURN DUCTWORK TO BE LINED WITH 1-1/2" ACOUSTICAL INSULATION.
3. ALL ROUND SUPPLY AND RETURN DUCTWORK TO BE EXTERNALLY WRAPPED WITH INSULATION WITH AN R-VALUE OF R-6.
4. ALL DUCT DIMENSIONS ARE INSIDE CLEAR DIMENSIONS.
5. FLEXIBLE DUCT MAY BE USED AT FINAL TERMINATION OF DUCT TO DIFFUSER OR GRILLE. MAXIMUM FLEXIBLE DUCT LENGTH IS 5'-0". PROVIDE DUCT SUPPORTS EVERY 3 FEET.
6. GRILLES AND DUCTWORK ARE SIZED INDEPENDENTLY. THE NECK SIZE OF GRILLES MAY NOT MATCH THE ASSOCIATED DUCT SIZE. PROVIDE TRANSITION TO GRILLES AS NECESSARY.
7. PROVIDE BALANCING DAMPER WITH LOCKING QUADRANT IN EACH DUCT BRANCH OF SUPPLY AND EXHAUST DUCTWORK.
8. PROVIDE REMOTE CABLE OPERATED DAMPERS FOR ALL DUCTWORK ABOVE HARD LID CEILINGS OR WHERE DAMPER IS INACCESSIBLE OR PROVIDE OPPOSED BLADE DAMPER WITH NYLON BUSHINGS AT GRILLE.
9. PROVIDE ACCESS DOORS FOR ALL SERVICEABLE EQUIPMENT OR VALVES ABOVE HARD LID CEILINGS OR IN WALLS. ALL ACCESS PANELS ARE TO BE PAINTED TO MATCH ADJACENT SURFACES.
10. WHERE A DUCT PENETRATES A RATED ASSEMBLY OR FLOOR AND IS NOT REQUIRED TO BE PROTECTED BY A DAMPER, ALL SPACE BETWEEN THE DUCT AND ASSEMBLY IS TO BE FIRE CAULKED. INSULATION OR COVERINGS ARE NOT TO CONTINUE THROUGH ASSEMBLY UNLESS TESTED AS PART OF AN APPROVED PENETRATION FIRESTOP SYSTEM.
11. THIS PROJECT WILL REQUIRE AFTER HOURS AND WEEKEND WORK TO RUN PIPING/DUCTWORK OR MODIFY SYSTEMS IN OR AFFECTING OCCUPIED SPACES. COORDINATE ALL SHUTDOWNS 72 HOURS IN ADVANCE WITH OWNER.
12. CONTROLS TO MATCH EXISTING JOHNSON CONTROLS. TIE INTO EXISTING JOHNSON CONTROLS DDC SYSTEM AND UPDATED GRAPHICS. PROVIDE ENGINEER WITH 2 WEEKS OF TRENDS SHOWING PROPER OPERATION OF EQUIPMENT UPON COMPLETION OF PROJECT. TRENDING DATA SHALL INCLUDE THE FOLLOWING DATA AT A MINIMUM: SPACE TEMPERATURE, SPACE SET POINT, HEATING OR COOLING MODE, AIR FLOW (FOR VAV SYSTEMS), & VALVE POSITION (FOR VAV SYSTEMS). SEE SEQUENCE OF OPERATIONS AND CONTROLS REQUIREMENTS ON SCHEDULE SHEET/SPECIFICATIONS.
13. COORDINATE EXACT THERMOSTAT LOCATIONS WITH FURNITURE AND OWNER. FAILURE TO DO SO MAY REQUIRE MOVING THERMOSTATS AT CONTRACTORS COST.
14. ALL CONTROLS WIRING SHALL BE INSTALLED IN RACEWAYS AND BE THE RESPONSIBILITY OF THE CONTROLS CONTRACTOR. RACEWAYS SHALL CONFORM TO THE FOLLOWING ELECTRICAL SPECIFICATIONS; HANGERS AND SUPPORTS FOR ELECTRICAL SYSTEMS, RACEWAYS AND BOXES FOR ELECTRICAL SYSTEMS AND SEISMIC CONTROLS FOR ELECTRICAL SYSTEMS.
15. FIELD VERIFY EXISTING FIELD CONDITIONS PRIOR TO ORDERING OR FABRICATING.
16. PROVIDE FACTORY AUTHORIZED STARTUP OF ALL EQUIPMENT INCLUDING STARTUP OF ANY FACTORY CONTROLS TO ENSURE PROPER SEQUENCING AND/OR COMMUNICATION TO BMS.
17. GENERAL CONTRACTOR SHALL HIRE A 3RD PARTY COMMISSIONING AGENT TO COMMISSION NEW HVAC EQUIPMENT. COMMISSIONING AGENT SHALL BE LICENSED MECHANICAL ENGINEER. COMMISSIONING AGENT TO PROVIDE COMMISSIONING PLAN LISTING EQUIPMENT AND TEST TO BE PERFORMED TO ENGINEER FOR REVIEW. COMMISSIONING AGENT SHALL PROVIDE REPORT STATING ANY SYSTEM DEFICIENCIES AND LISTING ANY DEFERRED TESTS.
18. PIPING AND DUCTWORK SHALL NOT BE SUPPORTED FROM THE ROOF DECK, JOIST BRIDGING OR OTHER PIPES. HANG PIPES FROM BEAMS, JOIST OR SUPPLEMENTARY STRUCTURAL MEMBERS. WHERE POSSIBLE INSTALL ALL PIPING AND DUCTWORK WITHIN 12" FROM SUPPORTING STRUCTURE.

MECHANICAL SHEET INDEX

ME001	MECHANICAL COVER SHEET
ME501	MECHANICAL DETAILS
ME502	MECHANICAL DETAILS
ME601	MECHANICAL SCHEDULES
MD101	LEVEL 1 MECHANICAL DEMOLITION PLAN
MD102	LEVEL 2 MECHANICAL DEMOLITION PLAN
MD103	ROOF MECHANICAL DEMOLITION PLAN
MH101	LEVEL 1 MECHANICAL PLAN
MH102	LEVEL 2 MECHANICAL PLAN
MH103	ROOF MECHANICAL PLAN

ARCHITECT 1877

ajc architects

703 east 1700 south
salt lake city, utah 84105
ph: 801.466.8818
fx: 801.466.4411
www.ajcarchitects.com

CONSULTANT

SPECTRUM ENGINEERS
324 S. State St., Suite 400
Salt Lake City, UT 84111
800-678-7077
801-328-5151
fax: 801-328-5155
www.spectrum-engineers.com

OWNER INFORMATION

PROJECT DESCRIPTION

DUMKE GYMNASTICS TRAINING CENTER

1825 E. SOUTH CAMPUS DRIVE
SALT LAKE CITY, UT 84112

AHJ STAMP

PROFESSIONAL ENGINEER
10-06-21
RYAN BOOGAARD
NO. 8671128
STATE OF UTAH

SHEET NAME:
MECHANICAL COVER SHEET

REVISIONS

MARK	DATE	DESCRIPTION

ISSUE DATA

ISSUE DATE: 10.01.21
ISSUE TYPE: CD
DRAWN BY: CLD
CHECKED BY: RHB
CLIENT PROJECT#:

SHEET NUMBER:

ME001

ALL IDEAS, DESIGNS, ARRANGEMENTS AND PLANS INDICATED OR REPRESENTED BY THIS DRAWING ARE OWNED BY AND THE PROPERTY OF AJC ARCHITECTS PC AND WERE CREATED, EVOLVED, AND DEVELOPED FOR USE ON, AND IN CONNECTION WITH THE SPECIFIED PROJECT. NONE OF THE IDEAS, DESIGNS, ARRANGEMENTS OR PLANS SHALL BE USED BY OR DISCLOSED TO ANY PERSON, FIRM, OR CORPORATION FOR ANY PURPOSE WHATSOEVER WITHOUT WRITTEN CONSENT OF AJC ARCHITECTS PC. WRITTEN DIMENSIONS ON THESE DRAWINGS SHALL HAVE PRECEDENCE OVER SCALE DIMENSIONS. CONTRACTORS SHALL VERIFY AND BE RESPONSIBLE FOR ALL DIMENSIONS AND CONDITIONS ON THE JOB, AND THIS OFFICE MUST BE NOTIFIED OF ANY VARIATION FROM THE DIMENSIONS AND CONDITIONS SHOWN BY THESE DRAWINGS. WARNING: REPRODUCTION HEREOF IS A CRIMINAL OFFENSE UNDER 18 U.S.C. SEC. 506. UNAUTHORIZED DISCLOSURE MAY CONSTITUTE TRADE SECRET MISAPPROPRIATION IN VIOLATION OF C.2-84-3-11 ET. SEQ. AND OTHER LAWS.

10/6/2021 2:55:39 PM C:\Users\cld\Documents\20191093 MECH Central_cldUPA79.rvt

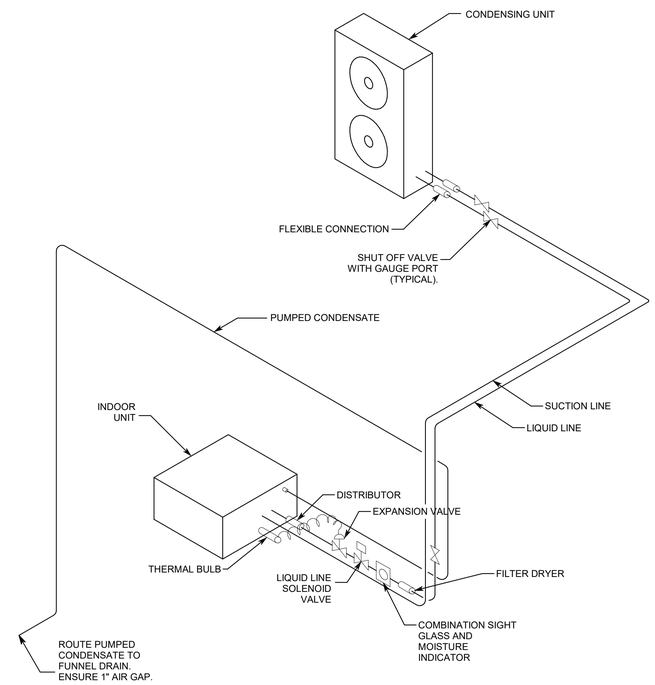

C1 SPLIT SYSTEM SCHEMATIC
1/8" = 1'-0"

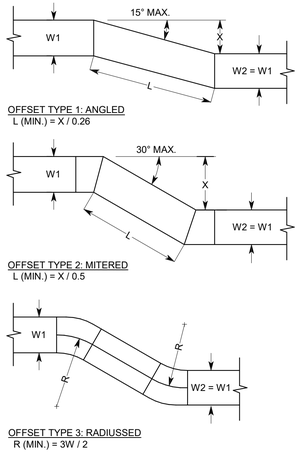

NOTES:
1. UNLESS OTHERWISE INDICATED ON PLANS, MAXIMUM ANGLES SHOWN SHALL APPLY.
2. ALL OFFSETS SHOWN ON DRAWINGS MADE BE MADE WITH ANY OF THE 3 OFFSET TYPES ABOVE.

C3 DUCT OFFSETS DETAIL
1/8" = 1'-0"

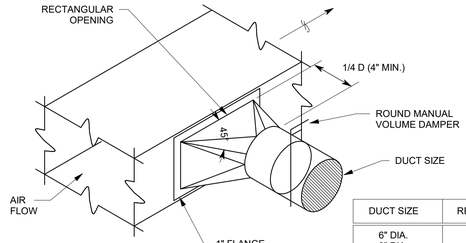

DUCT SIZE	RECT. OPNG.
6" DIA.	6" X 9"
8" DIA.	8" X 12"
10" DIA.	10" X 14"
12" DIA.	12" X 16"
14" DIA.	14" X 18"

NOTE:
CONSTRUCT FITTING PER SMACNA HVAC DUCT CONSTRUCTION STANDARDS METAL AND FLEXIBLE FIGURE 2-6.

D4 ROUND DUCT TAKE-OFF DETAIL
1/8" = 1'-0"

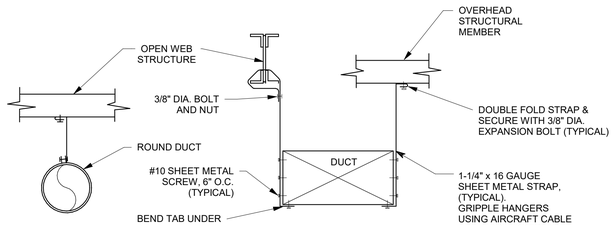

NOTE: USE SPECIFIED SPACING AND NOT LESS THAN ONE SUPPORT PER BRANCH.

NOTE: ONE HANGER REQUIRED DUCT 24" DIA. AND SMALLER, TWO HANGERS REQUIRED FOR DUCTS 26" DIA. AND LARGER.

NOTE:
REFER TO SMACNA HVAC DUCT CONSTRUCTION STANDARDS METAL AND FLEXIBLE - THIRD EDITION FOR ALL REQUIREMENTS

C4 DUCT HANGER DETAIL
1/8" = 1'-0"

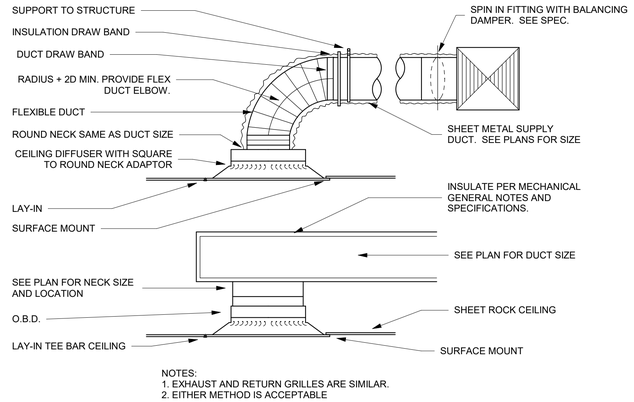

NOTES:
1. EXHAUST AND RETURN GRILLES ARE SIMILAR.
2. EITHER METHOD IS ACCEPTABLE

B4 CEILING DIFFUSER DETAIL
1/8" = 1'-0"

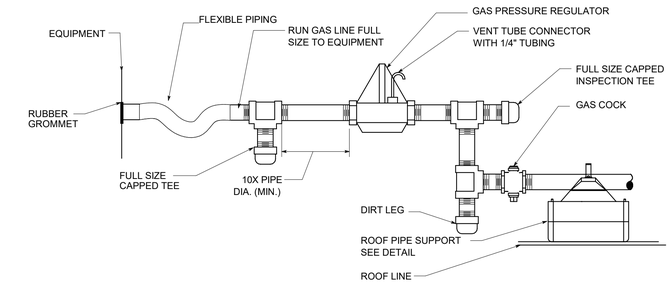

B1 EQUIPMENT GAS PIPING DETAIL
1/8" = 1'-0"

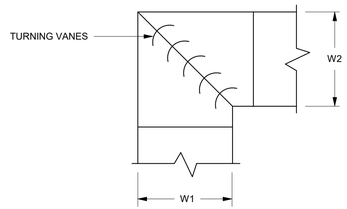

NOTES:
1. ALL TURNING VANES SHALL BE SINGLE VANE TYPE REGARDLESS OF DIMENSION.
2. ALL SINGLE VANES SHALL HAVE A 2 INCH RADIUS, 1 INCH MAXIMUM SPACE BETWEEN VANES AND A 3/4 INCH TRAILING EDGE.

B3 DUCT ELBOW DETAIL
1/8" = 1'-0"

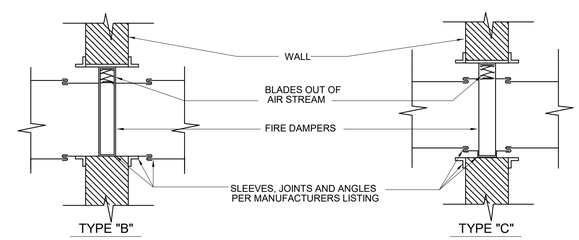

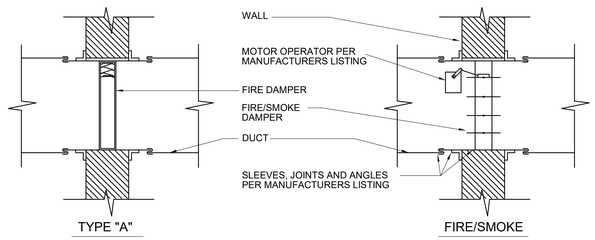

A1 FIRE DAMPER AND FIRE/SMOKE DAMPER DETAIL
1/8" = 1'-0"

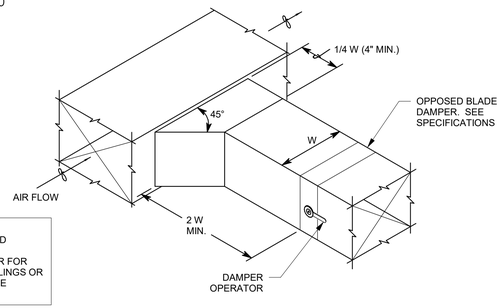

NOTE:
PROVIDE CONCEALED CEILING DAMPER REGULATOR FOR GYPSUM BOARD CEILINGS OR OTHER INACCESSIBLE LOCATIONS.

A4 BRANCH TAKE-OFF DETAIL
1/8" = 1'-0"

ARCHITECT 1877
ajc architects
703 east 1700 south
salt lake city, utah 84105
ph: 801.466.8818
fx: 801.466.4411
www.ajcarchitects.com

CONSULTANT
SPECTRUM ENGINEERS
324 S. State St., Suite 400
Salt Lake City, UT 84111
800-678-7077
801-328-5151
fax: 801-328-5155
www.spectrum-engineers.com

OWNER INFORMATION

PROJECT DESCRIPTION
DUMKE GYMNASTICS TRAINING CENTER
1825 E. SOUTH CAMPUS DRIVE
SALT LAKE CITY, UT 84112

AHJ STAMP

PROFESSIONAL ENGINEER
10-06-21
RYAN BOOGAARD
NO. 8677128
STATE OF UTAH

SHEET NAME:
MECHANICAL DETAILS

REVISIONS

MARK	DATE	DESCRIPTION

ISSUE DATA

ISSUE DATE:	10.01.21
ISSUE TYPE:	CD
DRAWN BY:	CLD
CHECKED BY:	RHB
CLIENT PROJECT#:	

SHEET NUMBER:
ME501

10/6/2021 2:55:40 PM C:\Users\cld\Documents\20191093 MECH Central_cldUPA79.rvt

ALL IDEAS, DESIGNS, ARRANGEMENTS AND PLANS INDICATED OR REPRESENTED BY THIS DRAWING ARE OWNED BY AND THE PROPERTY OF AJC ARCHITECTS PC AND WERE CREATED, EVOLVED, AND DEVELOPED FOR USE ON AND IN CONNECTION WITH THE SPECIFIED PROJECT. NONE OF THE IDEAS, DESIGNS, ARRANGEMENTS OR PLANS SHALL BE USED BY OR DISCLOSED TO ANY PERSON, FIRM, OR CORPORATION FOR ANY PURPOSE WHATSOEVER WITHOUT WRITTEN CONSENT OF AJC ARCHITECTS PC. WRITTEN DIMENSIONS ON THESE DRAWINGS SHALL HAVE PRECEDENCE OVER SCALE DIMENSIONS. CONTRACTORS SHALL VERIFY AND BE RESPONSIBLE FOR ALL DIMENSIONS AND CONDITIONS ON THE JOB AND THIS OFFICE MUST BE NOTIFIED OF ANY VARIATION FROM THE DIMENSIONS AND CONDITIONS SHOWN BY THESE DRAWINGS. WARNING: REPRODUCTION HEREOF IS A CRIMINAL OFFENSE UNDER 18 U.S.C. SEC. 506. UNAUTHORIZED DISCLOSURE MAY CONSTITUTE TRADE SECRET MISAPPROPRIATION IN VIOLATION OF 12-24-3 (1) ET. SEQ. AND OTHER LAWS.

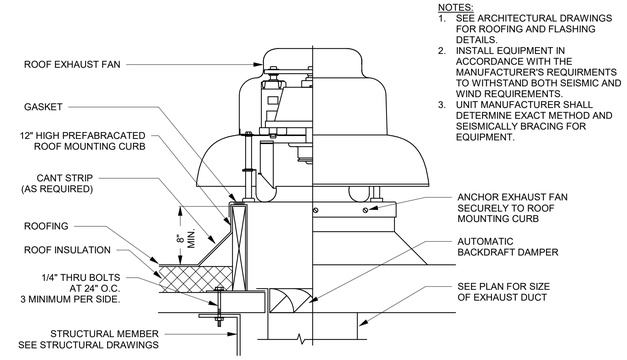

NOTES:
1. SEE ARCHITECTURAL DRAWINGS FOR ROOFING AND FLASHING DETAILS.
2. INSTALL EQUIPMENT IN ACCORDANCE WITH THE MANUFACTURER'S REQUIRMENTS TO WITHSTAND BOTH SEISMIC AND WIND REQUIREMENTS.
3. UNIT MANUFACTURER SHALL DETERMINE EXACT METHOD AND SEISMICALLY BRACING FOR EQUIPMENT.

C4 ROOF EXHAUST FAN DETAIL
1/8" = 1'-0"

METAL FASTENERS:
OMARK INSUL-PINS, DURA DYNE FASTENERS OR GRIP NAILS.
GRIP NAILS SHALL BE INSTALLED BY "GRIP NAIL AIR HAMMER" OR BY AUTOMATIC FASTENER EQUIP.

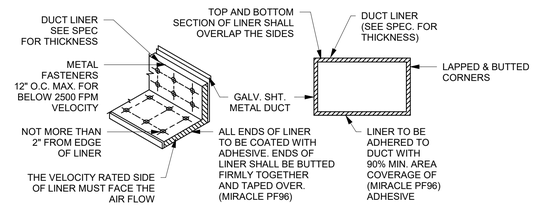

B4 DUCT LINER DETAIL
1/8" = 1'-0"

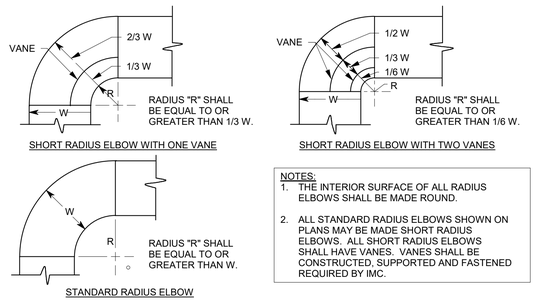

NOTES:
1. THE INTERIOR SURFACE OF ALL RADIUS ELBOWS SHALL BE MADE ROUND.
2. ALL STANDARD RADIUS ELBOWS SHOWN ON PLANS MAY BE MADE SHORT RADIUS ELBOWS. ALL SHORT RADIUS ELBOWS SHALL HAVE VANES. VANES SHALL BE CONSTRUCTED, SUPPORTED AND FASTENED REQUIRED BY IMC.

A4 ROUND DUCT ELBOW DETAIL
1/8" = 1'-0"

ARCHITECT 1877
ajc architects
703 east 1700 south
salt lake city, utah 84105
ph: 801.466.8818
fx: 801.466.4411
www.ajcarchitects.com

CONSULTANT
SPECTRUM ENGINEERS
324 S. State St., Suite 400
Salt Lake City, UT 84111
800-678-7077
801-328-5151
fax: 801-328-5155
www.spectrum-engineers.com

OWNER INFORMATION

PROJECT DESCRIPTION
DUMKE GYMNASTICS TRAINING CENTER
1825 E. SOUTH CAMPUS DRIVE
SALT LAKE CITY, UT 84112

AHJ STAMP

PROFESSIONAL ENGINEER
10-06-21
RYAN BOOGAARD
NO. 8677128
STATE OF UTAH

SHEET NAME:
MECHANICAL DETAILS

REVISIONS
MARK DATE DESCRIPTION

ISSUE DATA
ISSUE DATE: 10.01.21
ISSUE TYPE: CD
DRAWN BY: CLD
CHECKED BY: RHB
CLIENT PROJECT#:

SHEET NUMBER:
ME502

ROOFTOP UNIT SCHEDULE

LABEL	SERVES	TOTAL CFM	EXT. S.P. (WC)	MIN O. A. CFM	DESIGN CONDITIONS (BTUH)		HEATING CAPACITY (BTUH)		MCA	MOCP	VOLTAGE	PHASE	Hz	EMERGENCY POWER	DISCONNECT		WEIGHT	MANUFACTURER	MODEL	REMARKS
					COOLING CAP.	HEATING CAP.	INPUT	OUTPUT							FURN BY ELEC	FURN BY MECH				
(E)RT-4	2nd MULTIPURPOSE	2500	1.00	890	EXISTING	EXISTING	EXISTING	EXISTING	-	-	460	3	60	NO	YES	NO	1250	EXISTING	EXISTING	EXISTING
(E)RT-5	LEGACY HALL	1700	0.70	535	EXISTING	EXISTING	EXISTING	EXISTING	-	-	460	3	60	NO	YES	NO	1250	EXISTING	EXISTING	EXISTING
(E)RT-6	1st TRAINING ROOM	1700	0.70	875	EXISTING	EXISTING	EXISTING	EXISTING	-	-	460	3	60	NO	YES	NO	1250	EXISTING	EXISTING	EXISTING
RTU-2A	2nd OFFICES	800	0.60	50	12250.0	14000.0	60000.0	48600.0	19	30	230	1	60	NO	YES	NO	750	TRANE	4YCC4024A1060A	1,3,4,5,6,7,8,9,10,11,12
RTU-2B	2nd OFFICES	800	0.60	50	12190.0	13000.0	60000.0	48600.0	19	30	230	1	60	NO	YES	NO	850	TRANE	4YCC4024A1060A	1,3,4,5,6,7,8,9,10,11,12
RTU-3A	1st LOCKERS	1200	0.75	175	33260.0	35000.0	120000.0	84000.0	10	15	460	3	60	NO	YES	NO	850	TRANE	YSC036G4	1,2,4,5,6,7,8,9,10,11,12
RTU-3B	1st LOUNGE	1200	0.80	590	35570.0	66000.0	120000.0	84000.0	10	15	460	3	60	NO	YES	NO	850	TRANE	YSC036G4	1,2,4,5,6,7,8,9,10,11,12
RTU-3C	2nd CIRCULATION	1200	0.70	170	32760.0	40000.0	120000.0	84000.0	10	15	460	3	60	NO	YES	NO	850	TRANE	YSC036G4	1,2,4,5,6,7,8,9,10,11,12

1. 100% ECONOMIZER WITH DRY BULB CONTROL WITH LOW LEAK DAMPERS AND FAULT DETECTION DIAGNOSTICS.
2. 100% MODULATING POWERED EXHAUST.
3. PROVIDE WITH INTEGRAL BAROMETRIC RELIEF.
4. PROVIDE WITH 14" SEISMICALLY CALCULATED SLOPED ROOF CURB WITH HOLD DOWN CLIPS. SEE ARCHITECTRUAL DRAWINGS AND DETAILS.
5. PROVIDE WITH FACTORY MOUNTED CIRCUIT BREAKER SIZED IN ACCORDANCE WITH CURRENT NEC.
6. CONTRACTOR TO PROVIDE CONDENSATE DRAIN TRAP PER MANUFACTURER'S RECOMMENDATIONS.
7. PROVIDE CONDENSER COIL HAIL GUARD GRILLE.
8. ACCEPTABLE MANUFACTURERS: TRANE, CARRIER, DIAKIN OR PRIOR APPROVED EQUAL.
9. PROVIDE WITH MERV 13 FILTERS. PROVIDE A NEW SET OF FILTERS FOR EACH UNIT UPON SUBSTANTIAL COMPLETION.
10. PROVIDE WITH BACNET CONTROLLER. TIE INTO EXISIITNG JOHNSON CONTROLS.
11. UNITS SHALL BE PROVIDED WITH A DIFFERENTIAL PRESSURE TRANSFER SWITCH ACROSS EACH FILTER, FAN, AND COIL. THE METER SHALL BE CONNECTED AND MONITORED BY THE CAMPUS BAS SYSTEM.
    A. A DIAPHRAGM ACTUATED DIRECT READING DIAL TYPE DIFFERENTIAL PRESSURE GAUGE SHALL BE INSTALLED WITH STATIC PRESSURE TIPS ACROSS EACH FILTER SECTION.
    B. THE DIFFERENTIAL PRESSURE GAUGE SHALL BE SIMILAR TO DWYER 605 SERIES WITH APPROPRIATE OPERATING RANGE.
12. PROVIDE FACTORY AUTHORIZED STARTUP OF EQUIPMENT INCLUDING STARTUP OF ANY FACTORY CONTROLS TO ENSURE PROPER SEQUENCING AND/OR COMMUNICATION TO BMS.

SPLIT SYSTEM INDOOR UNIT SCHEDULE

LABEL	TYPE	CFM	COOLING CAPACITY	WEIGHT (LBS)	SOUND RATING	MCA	FLA	VOLTAGE	PHASE	Hz	MOCP	EMERGENCY POWER	DISCONNECT		MANUFACTURER	MODEL	REMARKS
													FURN BY ELEC	FURN BY MECH			
AC-101	COOLING ONLY / WALL MOUNTED	775	24000 Btu/h	54	45 dBA	1.0	0 A	208	1	60	25	NO	YES	NO	MITSUBISHI ELECTRIC	PKA-A24KA7	1,2,3,4,5
AC-102	COOLING ONLY / WALL MOUNTED	775	24000 Btu/h	54	45 dBA	1.0	0 A	208	1	60	25	NO	YES	NO	MITSUBISHI ELECTRIC	PKA-A24KA7	1,2,3,4,5

1. PROVIDE WITH CONDENSATE PUMP.
2. INDOOR UNIT POWERED FROM OUTDOOR UNIT.
3. ACCEPTABLE MANUFACTURERS: MITSUBISHI, LG, FUJITSU, DIAKIN OR PRIOR APPROVED EQUAL.
4. PROVIDE WITH WIND BAFFLE FOR COOLING AT -5 F.
5. PROVIDE FACTORY AUTHORIZED STARTUP OF EQUIPMENT INCLUDING STARTUP OF ANY FACTORY CONTROLS TO ENSURE PROPER SEQUENCING.

SPLIT SYSTEM CONDENSING UNIT SCHEDULE

LABEL	COOLING DATA			SOUND RATING	MCA	FLA	VOLTAGE	PHASE	Hz	MOCP	EMERGENCY POWER	DISCONNECT		WEIGHT	MANUFACTURER	MODEL	REMARKS
	CAP. (BTU)	EER	SEER									FURN BY ELEC	FURN BY MECH				
CU-101	24000	12.2	21.4	47 dBA	19	0.40 A	208	1	60	26	NO	YES	NO	165	MITSUBISHI ELECTRIC	PUY-A24NHA7	1,2,3,4,5,6,7,8,9
CU-102	24000	12.2	21.4	47 dBA	19	0.40 A	208	1	60	26	NO	YES	NO	165	MITSUBISHI ELECTRIC	PUY-A24NHA7	1,2,3,4,5,6,7,8,9

1. PROVIDE WITH HAIL GUARDS,
2. PROVIDE WITH NEOPRENE PADS AT ALL CONNECTION POINTS
3. PROVIDE LIQUID LINE SPECIALTIES INCLUDING FILTER DRIER, SIGHT GLASS, TXV, SOLENOID VALVE, 24V 1ph CONTROL WIRE BY CONTROLS CONTRACTOR.
4. PROVIDE REFRIGERANT PIPING SIZED AS PER MANUFACTURER'S RECOMMENDATIONS. "ACR" COPPER ONLY.
5. PROVIDE CRANKCASE HEATER.
6. PROVIDE WITH WIND BAFFLE FOR COOLING AT -5 F.
7. INDOOR UNIT POWERED FROM OUTDOOR UNIT.
8. ACCEPTABLE MANUFACTURERS: MITSUBISHI, LG, FUJITSU, DIAKIN OR PRIOR APPROVED EQUAL.
9. PROVIDE FACTORY AUTHORIZED STARTUP OF EQUIPMENT INCLUDING STARTUP OF ANY FACTORY CONTROLS TO ENSURE PROPER SEQUENCING.

EXHAUST FAN SCHEDULE

LABEL	CFM	STATIC PRESSURE	FAN RPM	SONES	VOLTAGE	PHASE	Hz	INPUT POWER	DISCONNECT FURN BY		WEIGHT	MANUFACTURER	MODEL	REMARKS
									ELEC	MECH				
(E)EF-4	260	0.25 in-wg	0	EXISTING	120	1	60	170 W	EXIST	EXIST	75	EXISTING	EXISTING	2 - EXISTING
EF-101	500	0.50 in-wg	1676	8.9	115	1	60	113 W	YES	NO	75	COOK	100C17DEC	2,3,4,5,6
EF-102	505	0.75 in-wg	1784	10.8	115	1	60	0.13 HP	YES	NO	75	COOK	101C28D	1,3,4,5,6

1. PROVIDE TIME CLOCK AND RUN CONTINUOUSLY DURING BUSINESS HOURS.
2. TIE INTO THERMOSTAT. EXHAUST FAN TO RAMP UP UPON A CALL FOR COOLING FROM THE THERMOSTAT.
3. PROVIDE WITH BACKDRAFT DAMPER, DISCONNECT SWITCH, SUPPORT BRACKETS AND ISOLATOR, FLEXIBLE CONNECTION, BELT TENSIONER (BELT DRIVE MODELS ONLY)
4. PROVIDE VARIABLE SPEED CONTROLLER FOR ALL DIRECT DRIVE FANS. TEST AND BALANCE SUBCONTRACTOR SHALL MARK BALANCED POSITION ON CONTROLLER.
5. ACCEPTABLE MANUFACTURERS: COOK, GREENHECK, PENN BARRY OR PRIOR APPROVED EQUAL.
6. PROVIDE FACTORY AUTHORIZED STARTUP OF EQUIPMENT INCLUDING STARTUP OF ANY FACTORY CONTROLS TO ENSURE PROPER SEQUENCING AND/OR COMMUNICATION TO BMS.

REGISTER - GRILLE- DIFFUSER SCHEDULE

LABEL	TYPE	BLOW PATTERN	MAX AIR FLOW (CFM)	FACE SIZE	NECK SIZE	NC	PRESSURE DROP (in-wg)	THROW	MANUFACTURER	MODEL	REMARKS
D-1	SQUARE PLAQUE DIFFUSER	4-WAY	200	12" X 12"	6" Ø	30	0.237	5-7-11	PRICE	SPD	1,2,3,4,7
D-2	SQUARE PLAQUE DIFFUSER	4-WAY	315	12" X 12"	8" Ø	30	0.343	6-9-14	PRICE	SPD	1,2,3,4,7
D-3	SQUARE PLAQUE DIFFUSER	4-WAY	545	20" X 20"	10" Ø	30	0.203	5-7-10	PRICE	SPD	1,2,3,4,7
D-4	SQUARE PLAQUE DIFFUSER	4-WAY	235	24" X 24"	6" Ø	30	0.093	4-5-8	PRICE	SPD	1,2,3,4,7
D-5	SQUARE PLAQUE DIFFUSER	4-WAY	350	24" X 24"	8" Ø	30	0.115	4-6-10	PRICE	SPD	1,2,3,4,7
D-6	SQUARE PLAQUE DIFFUSER	4-WAY	545	24" X 24"	10" Ø	30	0.180	5-8-12	PRICE	SPD	1,2,3,4,7
EG-1	LOUVERED FACE DIFFUSER	N/A	500	12" X 12"	N/A	30	0.140	N/A	PRICE	535	1,2,3,4,7
LSD-1	LINEAR SLOT DIFFUSER	1 SLOT - 1" SLOT WIDTH	160	48"	5" Ø	30	0.273	H: 11-14-20 V: 19	PRICE	SDB/SDS100	1,3,4,5,6,7
LSD-2	LINEAR SLOT DIFFUSER	1 SLOT - 1" SLOT WIDTH	200	60"	6" Ø	30	0.254	H: 12-16-22 V: 21	PRICE	SDB/SDS100	1,3,4,5,6,7
R-1	LOUVERED FACE DIFFUSER	N/A	500	12" X 12"	N/A	30	0.140	N/A	PRICE	535	1,2,3,4,7
R-2	LOUVERED FACE DIFFUSER	N/A	1115	14" X 14"	N/A	30	0.130	N/A	PRICE	535	1,2,3,4,7
R-3	LOUVERED FACE DIFFUSER	N/A	1750	24" X 24"	N/A	30	0.140	N/A	PRICE	535	1,2,3,4,7
TG-1	LOUVERED TRANSFER GRILLE	N/A	130	8" X 4"	8" X 4"	30	0.140	N/A	PRICE	535	1,2,3,4,7

1. PROVIDE TRANSITION AS NECESSARY.
2. PROVIDE LAY-IN MODULE AS NECESSARY.
3. PROVIDE WITH WITH LAY-IN TO HARD LID ADAPTER AS NECESSARY.
4. COLOR BY ARCHITECT.
5. PROVIDE OWNER WITH TWO LINEAR SLOT ADJUSTMENT TOOLS FOR MODIFYING AIRFLOW DIRECTION.
6. LINEAR SLOT DIFFUSER TO HAVE CONTINUOUS LOOK WHEN MULTIPLE ARE ADJACENT TO EACH OTHER.
7. ACCEPTABLE MANUFACTURERS: PRICE, KRUEGER, TITUS OR PRIOR APPROVED EQUAL.

ALL IDEAS, DESIGNS, ARRANGEMENTS AND PLANS INDICATED OR REPRESENTED BY THIS DRAWING ARE OWNED BY AND THE PROPERTY OF AJC ARCHITECTS PC AND WERE CREATED, EVOLVED, AND DEVELOPED FOR USE ON AND IN CONNECTION WITH THE SPECIFIED PROJECT. NONE OF THE IDEAS, DESIGNS, ARRANGEMENTS OR PLANS SHALL BE USED BY OR DISCLOSED TO ANY PERSON, FIRM OR CORPORATION FOR ANY PURPOSE WHATSOEVER WITHOUT WRITTEN CONSENT OF AJC ARCHITECTS PC. WRITTEN DIMENSIONS ON THESE DRAWINGS SHALL HAVE PRECEDENCE OVER SCALE DIMENSIONS. CONTRACTORS SHALL VERIFY AND BE RESPONSIBLE FOR ALL DIMENSIONS AND CONDITIONS ON THE JOB AND THIS OFFICE MUST BE NOTIFIED OF ANY VARIATION FROM THE DIMENSIONS AND CONDITIONS SHOWN BY THESE DRAWINGS. WARNING: REPRODUCTION HEREOF IS A CRIMINAL OFFENSE UNDER 18 U.S.C. SEC. 506. UNAUTHORIZED DISCLOSURE MAY CONSTITUTE TRADE SECRET MISAPPROPRIATION IN VIOLATION OF UT-234-2-311 ET. SEQ AND OTHER LAWS.

10/6/2021 2:55:42 PM C:\Users\cld\Documents\20191093 MECH Central_cldUPA79.rvt

ARCHITECT 1877
ajc architects
703 east 1700 south
salt lake city, utah 84105
ph: 801.466.8818
fx: 801.466.4411
www.ajcarchitects.com

CONSULTANT
SPECTRUM ENGINEERS
324 S. State St., Suite 400
Salt Lake City, UT 84111
800-678-7077
801-328-5151
fax: 801-328-5155
www.spectrum-engineers.com

OWNER INFORMATION

PROJECT DESCRIPTION

DUMKE GYMNASTICS TRAINING CENTER

1825 E. SOUTH CAMPUS DRIVE
SALT LAKE CITY, UT 84112

AHJ STAMP

PROFESSIONAL ENGINEER
10-06-21
RYAN BOOGAARD
NO. 8671128
STATE OF UTAH

SHEET NAME:
MECHANICAL SCHEDULES

REVISIONS

MARK	DATE	DESCRIPTION

ISSUE DATA

ISSUE DATE: 10.01.21
ISSUE TYPE: CD
DRAWN BY: CLD
CHECKED BY: RHB
CLIENT PROJECT#:

SHEET NUMBER:

ME601

ALL IDEAS, DESIGNS, ARRANGEMENTS AND PLANS INDICATED OR REPRESENTED BY THIS DRAWING ARE OWNED BY AND THE PROPERTY OF AJC ARCHITECTS PC AND WERE CREATED, EVOLVED, AND DEVELOPED FOR USE ON AND IN CONNECTION WITH THE SPECIFIED PROJECT. NONE OF THE IDEAS, DESIGNS, ARRANGEMENTS OR PLANS SHALL BE USED BY OR DISCLOSED TO ANY PERSON, FIRM, OR CORPORATION FOR ANY PURPOSE WHATSOEVER WITHOUT WRITTEN CONSENT OF AJC ARCHITECTS PC. WRITTEN DIMENSIONS ON THESE DRAWINGS SHALL HAVE PRECEDENCE OVER SCALE DIMENSIONS. CONTRACTORS SHALL VERIFY AND BE RESPONSIBLE FOR ALL DIMENSIONS AND CONDITIONS ON THE JOB AND THIS OFFICE MUST BE NOTIFIED OF ANY VARIATION FROM THE DIMENSIONS AND CONDITIONS SHOWN BY THESE DRAWINGS. WARNING: REPRODUCTION HEREOF IS A CRIMINAL OFFENSE UNDER 18 U.S.C. SEC. 506. UNAUTHORIZED DISCLOSURE MAY CONSTITUTE TRADE SECRET MISAPPROPRIATION IN VIOLATION OF 17 C.F.R.240.21-1 ET. SEQ. AND OTHER LAWS.

10/6/2021 2:55:33 PM C:\Users\cldt\Documents\20191093 MECH Central_cldUPA79.rvt

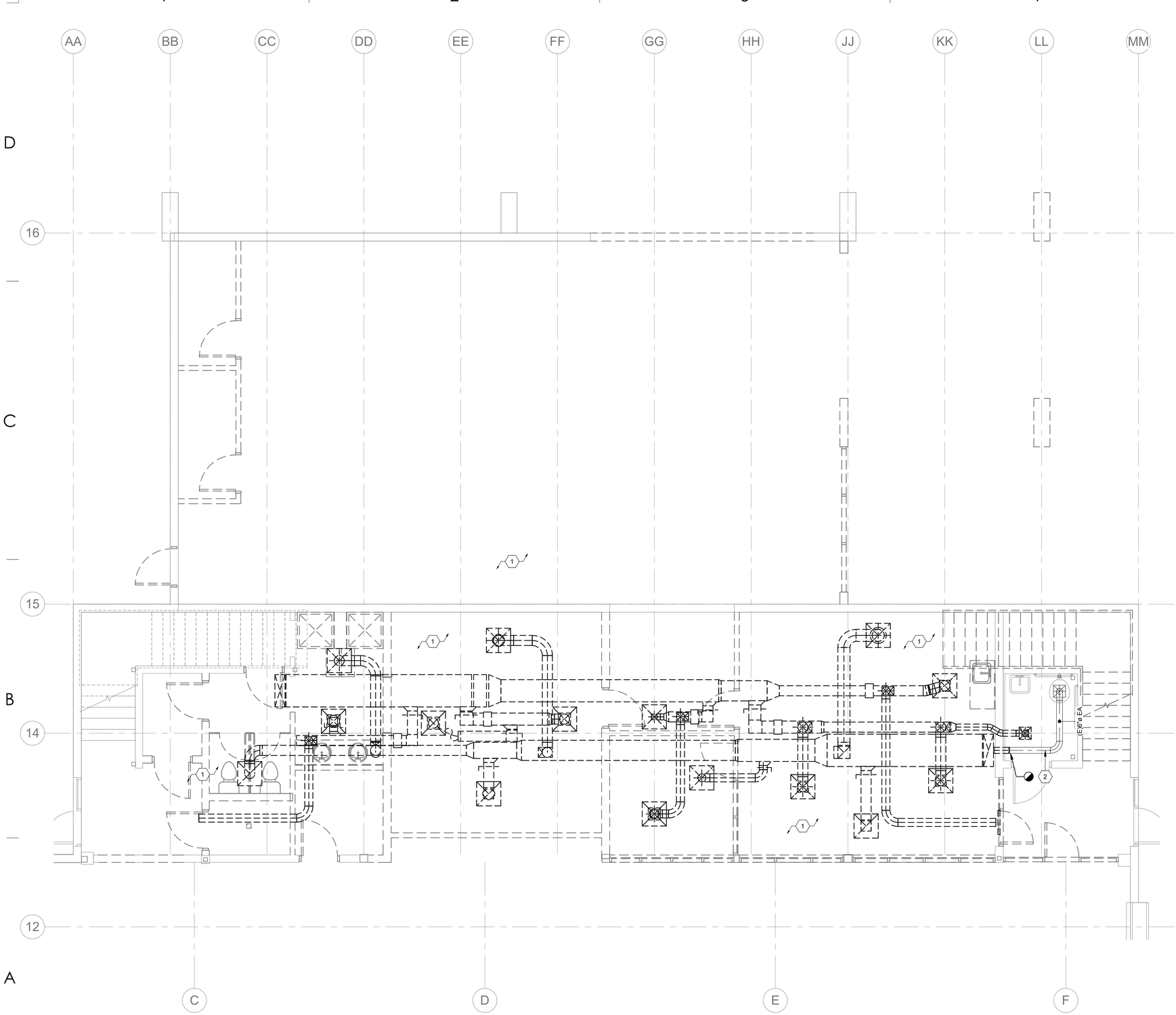

1 LEVEL 1 MECHANICAL DEMOLITION PLAN
1/4" = 1'-0"

0' 2' 4' 8' 12'
SCALE : 1/4" = 1'-0"

SHEET KEYNOTES

1 EXISTING DUCTWORK AND ALL ASSOCIATED DIFFUSERS, ELECTRIC HEATERS, ETC TO BE DEMOLISHED.

2 EXISTING DUCTWORK TO REMAIN.

ARCHITECT 1877
ajc architects
703 east 1700 south
salt lake city, utah 84105
ph: 801.466.8818
fx: 801.466.4411
www.ajcarchitects.com

CONSULTANT
SPECTRUM ENGINEERS
324 S. State St., Suite 400
Salt Lake City, UT 84111
800-678-7077
801-328-5151
fax: 801-328-5155
www.spectrum-engineers.com

OWNER INFORMATION

PROJECT DESCRIPTION

DUMKE GYMNASTICS TRAINING CENTER

1825 E. SOUTH CAMPUS DRIVE
SALT LAKE CITY, UT 84112

AHJ STAMP

PROFESSIONAL ENGINEER
10-06-21
RYAN
BOGAARD
NO. 8677128
STATE OF UTAH

SHEET NAME:
LEVEL 1 MECHANICAL DEMOLITION PLAN

REVISIONS

MARK	DATE	DESCRIPTION

ISSUE DATA

ISSUE DATE:	10.01.21
ISSUE TYPE:	CD
DRAWN BY:	CLD
CHECKED BY:	RHB
CLIENT PROJECT#:	

SHEET NUMBER:

MD101

10/6/2021 2:55:35 PM C:\Users\cldi\Documents\20191093 MECH Central_cldiUPA79.rvt

ALL IDEAS, DESIGNS, ARRANGEMENTS AND PLANS INDICATED OR REPRESENTED BY THIS DRAWING ARE OWNED BY AND THE PROPERTY OF AJC ARCHITECTS PC AND WERE CREATED, EVOLVED AND DEVELOPED FOR USE ON AND IN CONNECTION WITH THE SPECIFIED PROJECT. NONE OF THE IDEAS, DESIGNS, ARRANGEMENTS OR PLANS SHALL BE USED BY OR DISCLOSED TO ANY PERSON, FIRM OR CORPORATION FOR ANY PURPOSE WHATSOEVER WITHOUT WRITTEN CONSENT OF AJC ARCHITECTS PC. WRITTEN DIMENSIONS ON THESE DRAWINGS SHALL HAVE PRECEDENCE OVER SCALE DIMENSIONS. CONTRACTORS SHALL VERIFY AND BE RESPONSIBLE FOR ALL DIMENSIONS AND CONDITIONS ON THE JOB AND THIS OFFICE MUST BE NOTIFIED OF ANY VARIATION FROM THE DIMENSIONS AND CONDITIONS SHOWN BY THESE DRAWINGS. WARNING: REPRODUCTION HEREOF IS A CRIMINAL OFFENCE UNDER 18 U.S.C. SEC. 506. UNAUTHORIZED DISCLOSURE MAY CONSTITUTE TRADE SECRET MISAPPROPRIATION IN VIOLATION OF 17 C.24.2-311 ET. SEQ. AND OTHER LAWS

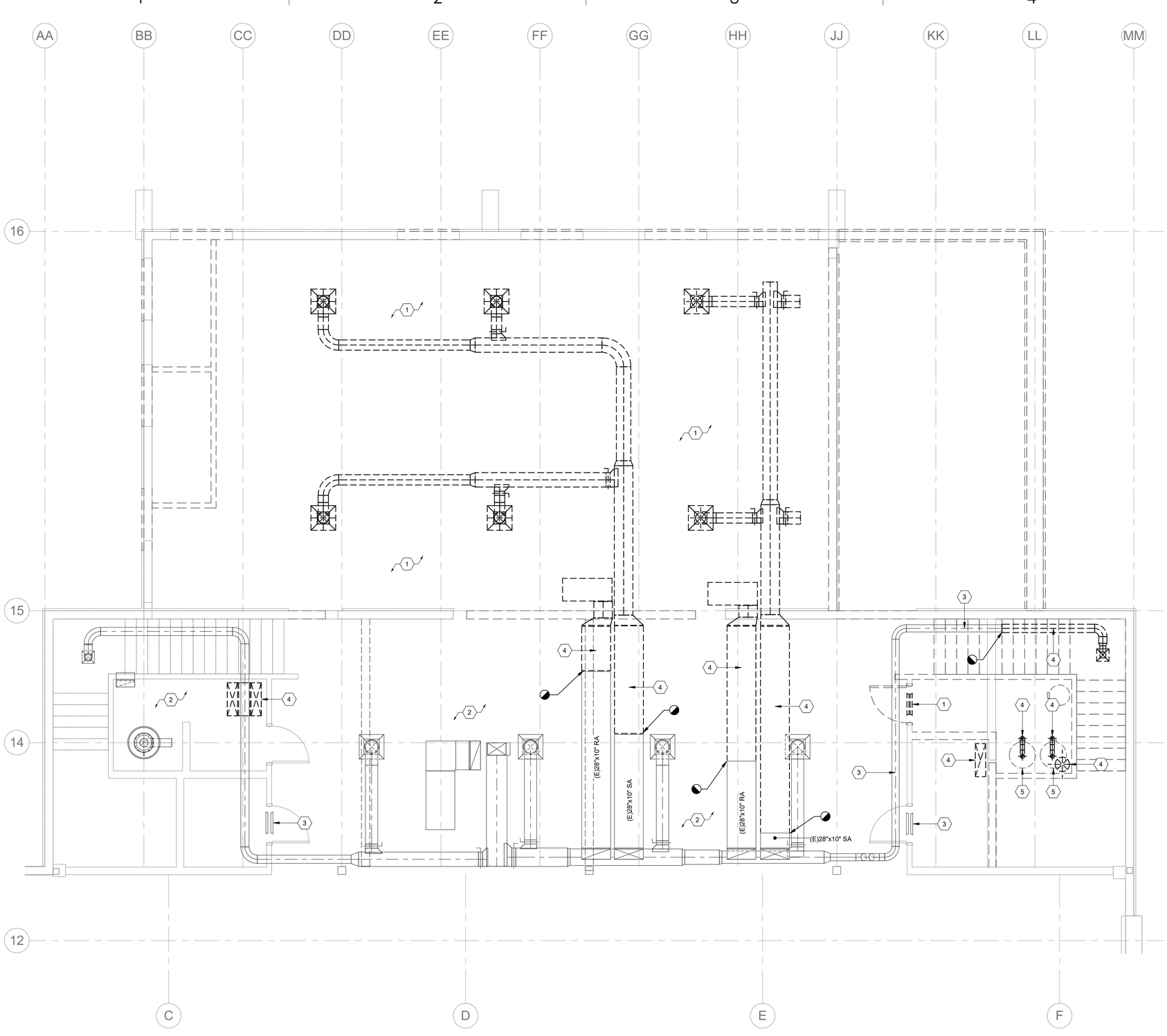

SHEET KEYNOTES

1 EXISTING DUCTWORK AND ALL ASSOCIATED DIFFUSERS, ELECTRIC HEATERS, ETC TO BE DEMOLISHED.

2 EXISTING DUCTWORK AND ALL ASSOCIATED DIFFUSERS, HANGERS, ETC TO REMAIN.

3 EXISTING DUCTWORK TO REMAIN.

4 EXISTING DUCTWORK TO BE DEMOLISHED.

5 EXISTING EQUIPMENT TO BE DEMOLISHED ALONG WITH ALL ASSOCIATED DUCTS, PIPES, AND ELECTRICAL CONNECTIONS.

1 LEVEL 2 MECHANICAL DEMOLITION PLAN
1/4" = 1'-0"

0' 2' 4' 8' 12'
SCALE : 1/4" = 1'-0"

ARCHITECT 1877
ajc architects
703 east 1700 south
salt lake city, utah 84105
ph: 801.466.8818
fx: 801.466.4411
www.ajcarchitects.com

CONSULTANT
SPECTRUM ENGINEERS
324 S. State St., Suite 400
Salt Lake City, UT 84111
800-678-7077
801-328-5151
fax: 801-328-5155
www.spectrum-engineers.com

OWNER INFORMATION

PROJECT DESCRIPTION
DUMKE GYMNASTICS TRAINING CENTER
1825 E. SOUTH CAMPUS DRIVE
SALT LAKE CITY, UT 84112

AHJ STAMP

PROFESSIONAL ENGINEER
10-06-21
RYAN BOOGAARD
NO. 8677128
STATE OF UTAH

SHEET NAME:
LEVEL 2 MECHANICAL DEMOLITION PLAN

REVISIONS

MARK	DATE	DESCRIPTION

ISSUE DATA

ISSUE DATE:	10.01.21
ISSUE TYPE:	CD
DRAWN BY:	CLD
CHECKED BY:	RHB
CLIENT PROJECT#:	

SHEET NUMBER:
MD102

10/6/2021 2:55:36 PM C:\Users\cld\Documents\20191093 MECH Central_cldUPA79.rvt

ALL IDEAS, DESIGNS, ARRANGEMENTS AND PLANS INDICATED OR REPRESENTED BY THIS DRAWING ARE OWNED BY AND THE PROPERTY OF AJC ARCHITECTS PC AND WERE CREATED, EVOLVED, AND DEVELOPED FOR USE ON AND IN CONNECTION WITH THE SPECIFIED PROJECT. NONE OF THE IDEAS, DESIGNS, ARRANGEMENTS OR PLANS SHALL BE USED BY OR DISCLOSED TO ANY PERSON, FIRM, OR CORPORATION FOR ANY PURPOSE WHATSOEVER WITHOUT WRITTEN CONSENT OF AJC ARCHITECTS PC. WRITTEN DIMENSIONS ON THESE DRAWINGS SHALL HAVE PRECEDENCE OVER SCALE DIMENSIONS. CONTRACTORS SHALL VERIFY AND BE RESPONSIBLE FOR ALL DIMENSIONS AND CONDITIONS ON THE JOB AND THIS OFFICE MUST BE NOTIFIED OF ANY VARIATION FROM THE DIMENSIONS AND CONDITIONS SHOWN BY THESE DRAWINGS. WARNING: REPRODUCTION HEREOF IS A CRIMINAL OFFENCE UNDER 18 U.S.C. SEC. 506. UNAUTHORIZED DISCLOSURE MAY CONSTITUTE TRADE SECRET MISAPPROPRIATION IN VIOLATION OF 12.24.3 H.1 ET. SEQ. AND OTHER LAWS.

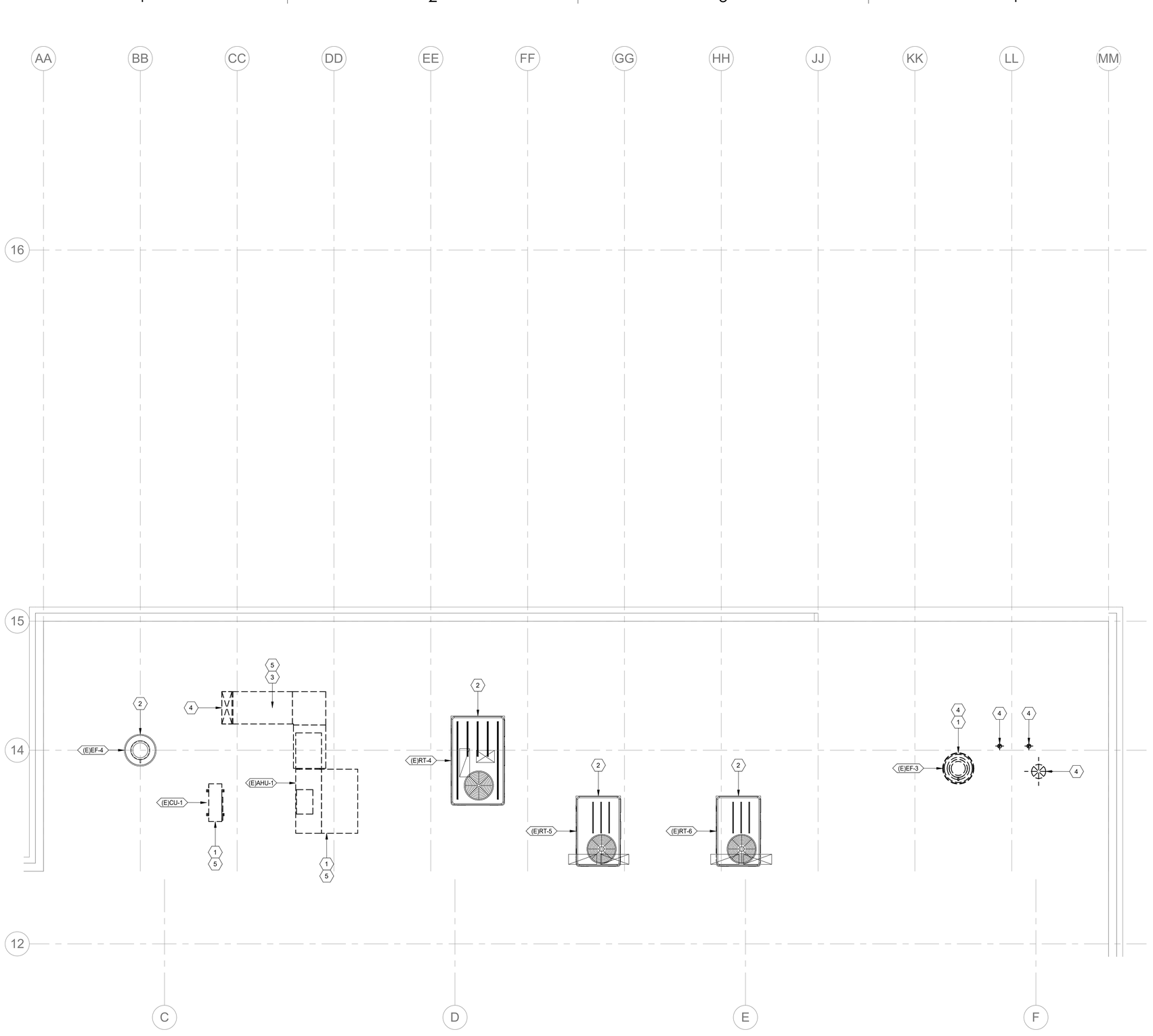

SHEET KEYNOTES

1 EXISTING EQUIPMENT TO BE DEMOLISHED ALONG WITH ALL ASSOCIATED DUCTS, PIPES, AND ELECTRICAL CONNECTIONS.

2 EXISTING EQUIPMENT TO REMAIN.

3 EXISTING DUCTWORK TO BE DEMOLISHED.

4 EXISTING DUCTWORK THROUGH ROOF TO BE DEMOLISHED. PATCH AND REPAIR ROOF. COORDINATE WITH THE ARCHITECT.

5 DEMOLISH EXISTING CURBS AND ASSOCIATED ROOF FASTENERS. INFILL ASSOCIATED EXISTING ROOF PENETRATIONS. COORDINATE WITH ARCHITECTURAL DRAWINGS.

1 ROOF MECHANICAL DEMOLITION PLAN
1/4" = 1'-0"

0' 2' 4' 8' 12'
SCALE : 1/4" = 1'-0"

ARCHITECT 1877

ajc architects
703 east 1700 south
salt lake city, utah 84105
ph: 801.466.8818
fx: 801.466.4411
www.ajcarchitects.com

CONSULTANT

SPECTRUM ENGINEERS
324 S. State St., Suite 400
Salt Lake City, UT 84111
800-678-7077
801-328-5151
fax: 801-328-5155
www.spectrum-engineers.com

OWNER INFORMATION

PROJECT DESCRIPTION

DUMKE GYMNASTICS TRAINING CENTER

1825 E. SOUTH CAMPUS DRIVE
SALT LAKE CITY, UT 84112

AHJ STAMP

PROFESSIONAL ENGINEER
10-06-21
RYAN BOOGAARD
NO. 8677128
STATE OF UTAH

SHEET NAME:
ROOF MECHANICAL DEMOLITION PLAN

REVISIONS

MARK	DATE	DESCRIPTION

ISSUE DATA

ISSUE DATE:	10.01.21
ISSUE TYPE:	CD
DRAWN BY:	CLD
CHECKED BY:	RHB
CLIENT PROJECT#:	

SHEET NUMBER:

MD103

10/6/2021 2:55:47 PM C:\Users\cld\Documents\20191093 MECH Central_cldUPA79.rvt

ALL IDEAS, DESIGNS, ARRANGEMENTS AND PLANS INDICATED OR REPRESENTED BY THIS DRAWING ARE OWNED BY AND THE PROPERTY OF AJC ARCHITECTS PC AND WERE CREATED, EVOLVED, AND DISCLOSED FOR USE ON AND IN CONNECTION WITH THE SPECIFIED PROJECT. NONE OF THE IDEAS, DESIGNS, ARRANGEMENTS OR PLANS SHALL BE USED BY OR DISCLOSED TO ANY PERSON, FIRM, OR CORPORATION FOR ANY PURPOSE WHATSOEVER WITHOUT WRITTEN CONSENT OF AJC ARCHITECTS PC. WRITTEN DIMENSIONS ON THESE DRAWINGS SHALL HAVE PRECEDENCE OVER SCALE DIMENSIONS. CONTRACTORS SHALL VERIFY AND BE RESPONSIBLE FOR ALL DIMENSIONS AND CONDITIONS ON THE JOB AND THIS OFFICE MUST BE NOTIFIED OF ANY VARIATION FROM THE DIMENSIONS AND CONDITIONS SHOWN BY THESE DRAWINGS. WARNING: REPRODUCTION HEREOF IS A CRIMINAL OFFENCE UNDER 18 U.S.C. SEC. 506. UNAUTHORIZED DISCLOSURE MAY CONSTITUTE TRADE SECRET MISAPPROPRIATION IN VIOLATION OF 17 U.S.C. § 1-311 ET. SEQ. AND OTHER LAWS.

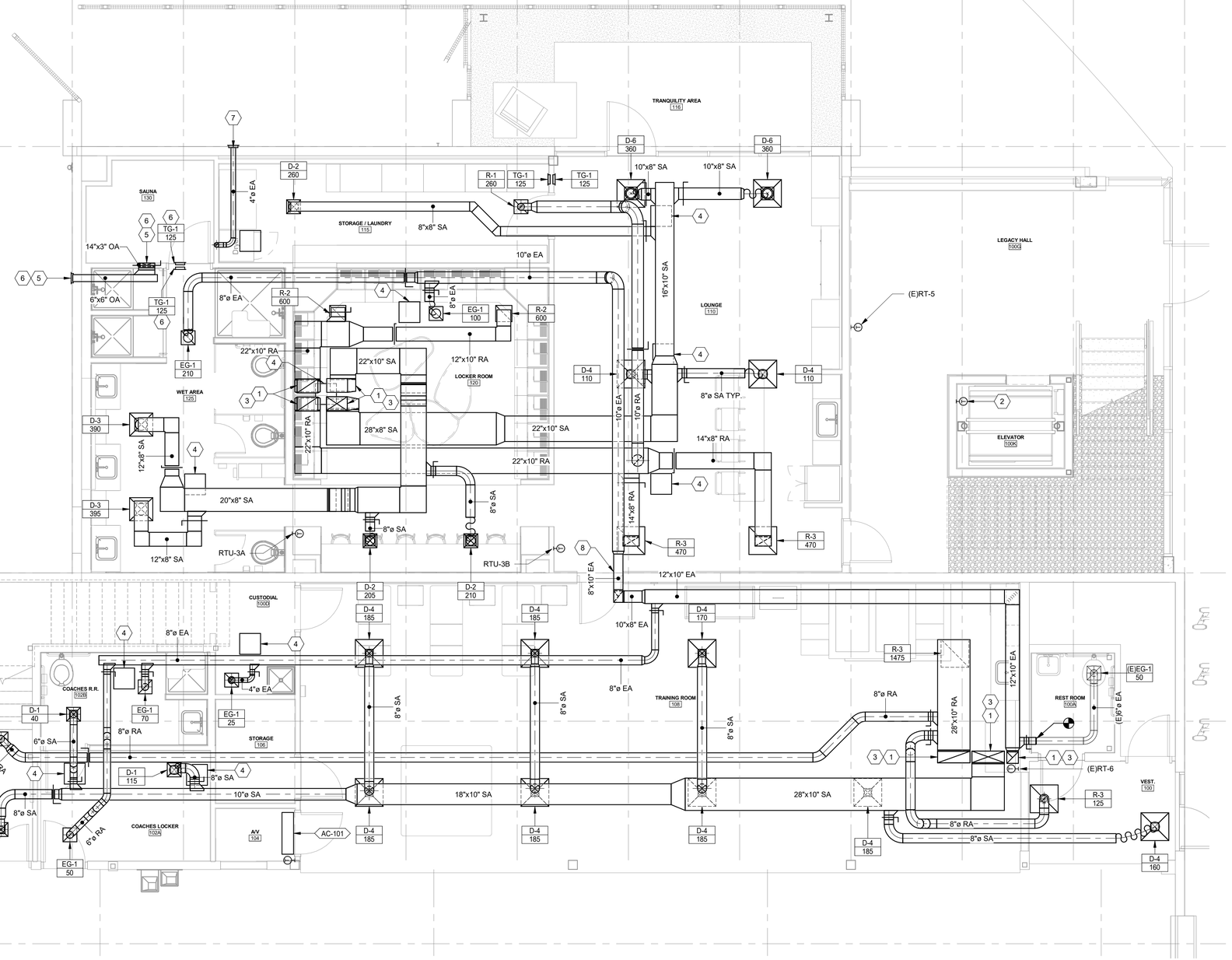

SHEET KEYNOTES

1. DUCT UP TO FLOOR ABOVE IN THIS APPROXIMATE LOCATION. SEE FLOOR ABOVE FOR CONTINUATION.
2. ELEVATOR THERMOSTAT TO TIE INTO EXHAUST FAN ON ROOF. COORDINATE WITH ELEVATOR SUBCONTRACTOR FOR THERMOSTAT LOCATION.
3. PROVIDE UL LISTED FIRE SMOKE DAMPER AT THE RATED ASSEMBLY IN THIS APPROXIMATE LOCATION.
4. PROVIDE 18" X 18" ACCESS PANEL IN THIS APPROXIMATE LOCATION.
5. OUTSIDE AIR DUCT TO DROP TO INTAKE GRILLE BELOW SAUNA HEATER. CONFIRM SIZES AND LOCATIONS WITH SAUNA AND SAUNA HEATER SHOP DRAWINGS. FOR BIDDING ASSUME 14"X3" AND 6"X6" DUCTING FROM AN XVENT 6" SINGLE OUTLET LOUVER.
6. SAUNA COMPONENTS TO BE BID AS ADD ALTERNATE 4.
7. PROVIDE LAUNDRY EXHAUST WITH EXTERIOR WALL TERMINATION KIT IN THIS APPROXIMATE LOCATION.
8. DUCT THROUGH EXISTING STRUCTURAL WALL IN THIS APPROXIMATE LOCATION. COORDINATE LOCATION WITH STRUCTURAL DRAWINGS AND SPECIFICATIONS PRIOR TO CUTTING.

1 LEVEL 1 MECHANICAL PLAN
1/4" = 1'-0"

SCALE : 1/4" = 1'-0"

ARCHITECT 1877
ajc architects
703 east 1700 south
salt lake city, utah 84105
ph: 801.466.8818
fx: 801.466.4411
www.ajcarchitects.com

CONSULTANT
SPECTRUM ENGINEERS
324 S. State St., Suite 400
Salt Lake City, UT 84111
800-678-7077
801-328-5151
fax: 801-328-5155
www.spectrum-engineers.com

OWNER INFORMATION

PROJECT DESCRIPTION

DUMKE GYMNASTICS TRAINING CENTER

1825 E. SOUTH CAMPUS DRIVE
SALT LAKE CITY, UT 84112

AHJ STAMP

PROFESSIONAL ENGINEER
10-06-21
RYAN BOOGAARD
NO. 8677128
STATE OF UTAH

SHEET NAME:
LEVEL 1
MECHANICAL PLAN

REVISIONS

MARK	DATE	DESCRIPTION

ISSUE DATA

ISSUE DATE:	10.01.21
ISSUE TYPE:	CD
DRAWN BY:	CLD
CHECKED BY:	RHB
CLIENT PROJECT#:	

SHEET NUMBER:

MH101

ALL IDEAS, DESIGNS, ARRANGEMENTS AND PLANS INDICATED OR REPRESENTED BY THIS DRAWING ARE OWNED BY AND THE PROPERTY OF AJC ARCHITECTS PC AND WERE CREATED, EVOLVED, AND DEVELOPED FOR USE ON AND IN CONNECTION WITH THE SPECIFIED PROJECT. NONE OF THE IDEAS, DESIGNS, ARRANGEMENTS OR PLANS SHALL BE USED BY OR DISCLOSED TO ANY PERSON, FIRM, OR CORPORATION FOR ANY PURPOSE WHATSOEVER WITHOUT WRITTEN CONSENT OF AJC ARCHITECTS PC. WRITTEN DIMENSIONS ON THESE DRAWINGS SHALL HAVE PRECEDENCE OVER SCALE DIMENSIONS. CONTRACTORS SHALL VERIFY AND BE RESPONSIBLE FOR ALL DIMENSIONS AND CONDITIONS ON THE JOB AND THIS OFFICE MUST BE NOTIFIED OF ANY VARIATION FROM THE DIMENSIONS AND CONDITIONS SHOWN BY THESE DRAWINGS. WARNING: REPRODUCTION HEREOF IS A CRIMINAL OFFENSE UNDER 18 U.S.C. SEC. 506. UNAUTHORIZED DISCLOSURE MAY CONSTITUTE TRADE SECRET MISAPPROPRIATION IN VIOLATION OF 7 C.F.R. 3.11 ET. SEQ. AND OTHER LAWS.

10/6/2021 2:55:51 PM C:\Users\cld\Documents\20191093 MECH Central_cldUPA79.rvt

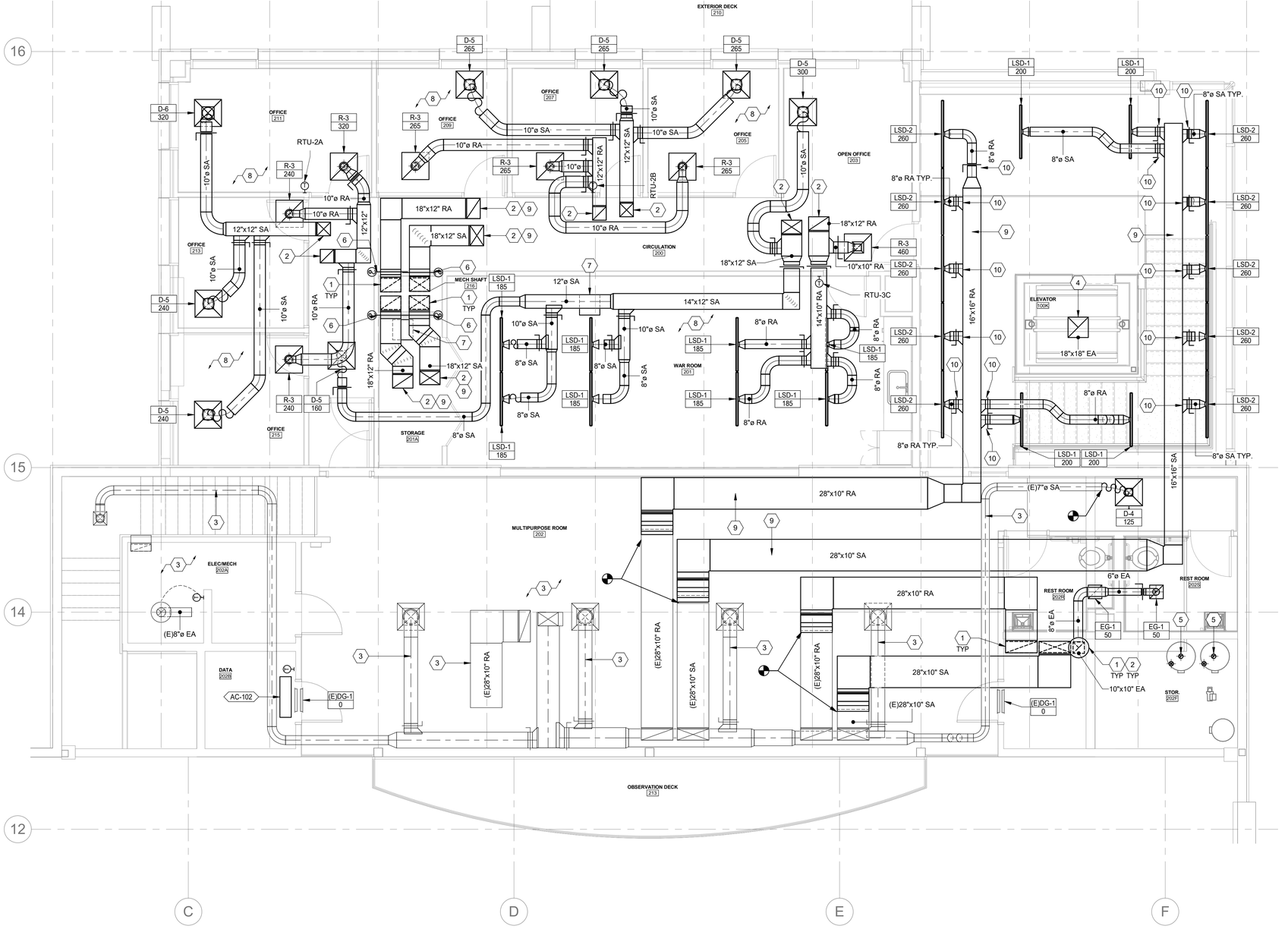

1 LEVEL 2 MECHANICAL PLAN

1/4" = 1'-0"

SCALE : 1/4" = 1'-0"

SHEET KEYNOTES

1 DUCT DOWN TO FLOOR BELOW IN THIS APPROXIMATE LOCATION. SEE FLOOR BELOW FOR CONTINUATION.

2 DUCT UP TO FLOOR ABOVE IN THIS APPROXIMATE LOCATION. SEE FLOOR ABOVE FOR CONTINUATION.

3 EXISTING DUCTWORK TO REMAIN.

4 DUCT FROM EXHAUST FAN ON ROOF STUBBED INTO SPACE. COORDINATE SPACE REQUIREMENTS WITH ELEVATOR SUBCONTRACTOR.

5 CONCENTRIC VENT THROUGH ROOF IN THIS APPROXIMATE LOCATION.

6 PROVIDE UL LISTED FIRE SMOKE DAMPER AT THE RATED ASSEMBLY IN THIS APPROXIMATE LOCATION.

7 PROVIDE 18" X 18" ACCESS PANEL IN THIS APPROXIMATE LOCATION.

8 DUCTING, DIFFUSERS, HANGERS, ETC. SERVING THIS AREA TO BE BID AS ADD ALTERNATE 1. ROOFTOP UNITS AND ALL ASSOCIATED COMPONENTS INCLUDING ALL DUCT CONNECTIONS AND DROPS FROM THE EQUIPMENT INTO THE 2ND FLOOR CEILING SPACE TO BE INCLUDED IN THE BASE BID. ALL DUCTING AND ASSOCIATED EQUIPMENT SERVING THE FIRST FLOOR TO BE INCLUDED IN THE BASE BID.

9 DUCTING AND ALL ASSOCIATED COMPONENTS TO BE INCLUDED IN THE BASE BID.

10 PROVIDE CABLE OR LINKAGE OPERATED DAMPER FOR REMOTE DAMPER ADJUSTMENT.

ARCHITECT 1877

ajc architects

703 east 1700 south
salt lake city, utah 84105
ph: 801.466.8818
fx: 801.466.4411
www.ajcarchitects.com

CONSULTANT

SPECTRUM ENGINEERS
324 S. State St., Suite 400
Salt Lake City, UT 84111
800-678-7077
801-328-5151
fax: 801-328-5155
www.spectrum-engineers.com

OWNER INFORMATION

PROJECT DESCRIPTION

DUMKE GYMNASTICS TRAINING CENTER

1825 E. SOUTH CAMPUS DRIVE
SALT LAKE CITY, UT 84112

AHJ STAMP

PROFESSIONAL ENGINEER
10-06-21
RYAN BOOGAARD
NO. 8677128
STATE OF UTAH

SHEET NAME:

LEVEL 2 MECHANICAL PLAN

REVISIONS

MARK	DATE	DESCRIPTION

ISSUE DATA

ISSUE DATE:	10.01.21
ISSUE TYPE:	CD
DRAWN BY:	CLD
CHECKED BY:	RHB
CLIENT PROJECT#:	

SHEET NUMBER:

MH102

10/6/2021 2:55:53 PM C:\Users\cld\Documents\20191093 MECH Central_cldUPA79.rvt

ALL IDEAS, DESIGNS, ARRANGEMENTS AND PLANS INDICATED OR REPRESENTED BY THIS DRAWING ARE OWNED BY AND THE PROPERTY OF AJC ARCHITECTS PC AND WERE CREATED, EVOLVED, AND DEVELOPED FOR USE ON AND IN CONNECTION WITH THE SPECIFIED PROJECT. NONE OF THE IDEAS, DESIGNS, ARRANGEMENTS OR PLANS SHALL BE USED BY OR DISCLOSED TO ANY PERSON, FIRM, OR CORPORATION FOR ANY PURPOSE WHATSOEVER WITHOUT WRITTEN CONSENT OF AJC ARCHITECTS PC. WRITTEN DIMENSIONS ON THESE DRAWINGS SHALL HAVE PRECEDENCE OVER SCALE DIMENSIONS. CONTRACTORS SHALL VERIFY AND BE RESPONSIBLE FOR ALL DIMENSIONS AND CONDITIONS ON THE JOB AND THIS OFFICE MUST BE NOTIFIED OF ANY VARIATION FROM THE DIMENSIONS AND CONDITIONS SHOWN BY THESE DRAWINGS. WARNING: REPRODUCTION HEREOF IS A CRIMINAL OFFENCE UNDER 18 U.S.C. SEC. 506. UNAUTHORIZED DISCLOSURE MAY CONSTITUTE TRADE SECRET MISAPPROPRIATION IN VIOLATION OF CC-24-3.311 ET. SEQ. AND OTHER LAWS

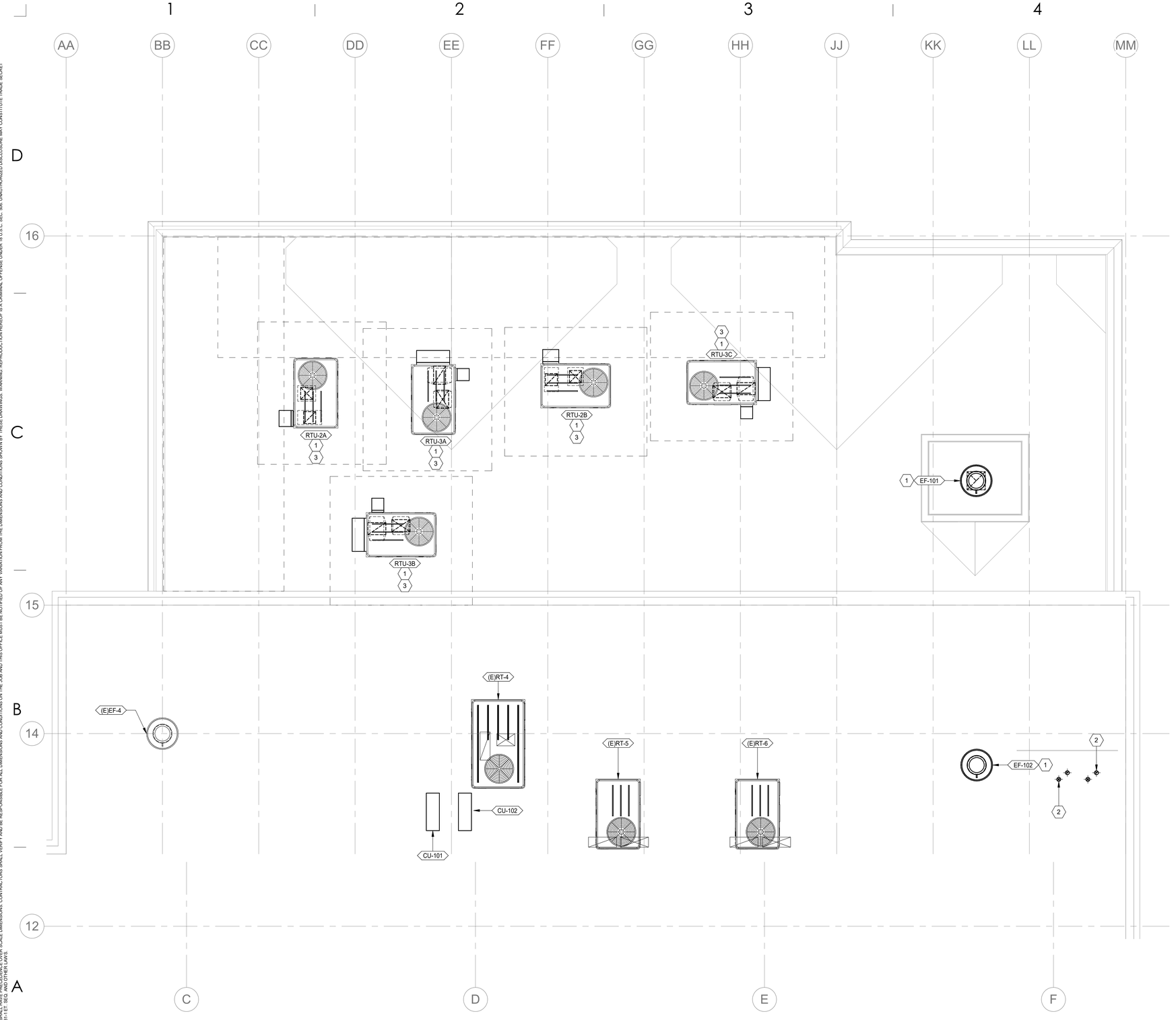

1 ROOF MECHANICAL PLAN

1/4" = 1'-0"

0' 2' 4' 8' 12'

SCALE : 1/4" = 1'-0"

SHEET KEYNOTES

1 DUCT DOWN TO FLOOR BELOW IN THIS APPROXIMATE LOCATION. SEE FLOOR BELOW FOR CONTINUATION.

2 CONCENTRIC VENT THROUGH ROOF IN THIS APPROXIMATE LOCATION.

3 ROOFTOP UNIT TO BE INSTALLED ON ROOF CURB. SEE ARCHITECTURAL DRAWINGS AND DETAILS.

ARCHITECT 1877

ajc architects

703 east 1700 south
salt lake city, utah 84105
ph: 801.466.8818
fx: 801.466.4411
www.ajcarchitects.com

CONSULTANT

SPECTRUM ENGINEERS
324 S. State St., Suite 400
Salt Lake City, UT 84111
800-678-7077
801-328-5151
fax: 801-328-5155
www.spectrum-engineers.com

OWNER INFORMATION

PROJECT DESCRIPTION

DUMKE GYMNASTICS TRAINING CENTER

1825 E. SOUTH CAMPUS DRIVE
SALT LAKE CITY, UT 84112

AHJ STAMP

PROFESSIONAL ENGINEER
10-06-21
RYAN BOOGAARD
NO. 8677128
STATE OF UTAH

SHEET NAME:
ROOF MECHANICAL PLAN

REVISIONS

MARK	DATE	DESCRIPTION

ISSUE DATA

ISSUE DATE:	10.01.21
ISSUE TYPE:	CD
DRAWN BY:	CLD
CHECKED BY:	RHB
CLIENT PROJECT#:	

SHEET NUMBER:

MH103

ALL IDEAS, DESIGNS, ARRANGEMENTS AND PLANS INDICATED OR REPRESENTED BY THIS DRAWING ARE OWNED BY AND THE PROPERTY OF AJC ARCHITECTS PC AND WERE CREATED, EVOLVED, AND DEVELOPED FOR USE ON AND IN CONNECTION WITH THE SPECIFIED PROJECT. NONE OF THE IDEAS, DESIGNS, ARRANGEMENTS OR PLANS SHALL BE USED BY OR DISCLOSED TO ANY PERSON, FIRM, OR CORPORATION FOR ANY PURPOSE WHATSOEVER WITHOUT WRITTEN CONSENT OF AJC ARCHITECTS PC. WRITTEN DIMENSIONS ON THESE DRAWINGS SHALL HAVE PRECEDENCE OVER SCALE DIMENSIONS. CONTRACTORS SHALL VERIFY AND BE RESPONSIBLE FOR ALL DIMENSIONS AND CONDITIONS ON THE JOB AND THIS OFFICE MUST BE NOTIFIED OF ANY VARIATION FROM THE DIMENSIONS AND CONDITIONS SHOWN BY THESE DRAWINGS. WARNING: REPRODUCTION HEREOF IS A CRIMINAL OFFENCE UNDER 18 U.S.C. SEC. 506. UNAUTHORIZED DISCLOSURE MAY CONSTITUTE TRADE SECRET MISAPPROPRIATION IN VIOLATION OF 17 U.S.C. § 101 ET. SEQ. AND OTHER LAWS

10/6/2021 2:56:02 PM C:\Users\cld\Documents\20191093 MECH Central_cldUPA79.rvt

MISC. SYMBOL LEGEND

SYMBOL	DESCRIPTION
# / SHEET	DETAIL INDICATOR: # INDICATES DETAIL NUMBER, SHEET INDICATES DRAWING SHEET WHERE DETAIL IS SHOWN.
# / SHEET	ELEVATION OR SECTION INDICATOR, EXTERIOR: # INDICATES ELEVATION OR SECTION NUMBER, SHEET INDICATES DRAWING SHEET WHERE ELEVATION OR SECTION IS SHOWN.
100	ROOM OR SPACE NUMBER.
1	KEYNOTE INDICATOR.
	REVISION INDICATOR.
CU-1	EQUIPMENT INDICATOR.
P-	PLUMBING FIXTURE INDICATOR.
TYPE / CFM / SIZE	DIFFUSER/GRILLE INDICATOR.
TYPE / SIZE	DIFFUSER/GRILLE INDICATOR.
	BREAK, STRAIGHT
	BREAK, ROUND.
	MATCH LINE INDICATOR
	HIDDEN FEATURES LINE: HIDDEN, THIN LINE.
	CONTRACT LIMIT LINE: DASHDOT, WIDE LINE.
	NEW CONNECTION POINT TO EXISTING

PLUMBING SYMBOL LEGEND

SYMBOL	DESCRIPTION
C.B.	CATCH BASIN
M.H.	MANHOLE
W.H.	WALL HYDRANT
H.B.	HOSE BIBB
	CLEANOUT TO GRADE
	FLOOR CLEANOUT
	WALL CLEANOUT
	1/2 GRATE
	3/4 GRATE
	FULL GRATE

DEFINITIONS

NOTE: ALL DEFINITIONS MAY NOT BE USED.

INDICATED: THE TERM "INDICATED" REFERS TO GRAPHIC REPRESENTATIONS, NOTES, OR SCHEDULES ON THE DRAWINGS, OTHER PARAGRAPHS OR SCHEDULES IN THE SPECIFICATIONS, AND SIMILAR REQUIREMENTS IN THE CONTRACT DOCUMENTS. WHERE TERMS SUCH AS "SHOWN", "NOTED", "SCHEDULED", AND "SPECIFIED" ARE USED, IT IS TO HELP THE READER LOCATE THE REFERENCE, NO LIMITATION ON LOCATION IS INTENDED.

DIRECTED: TERMS SUCH AS "DIRECTED", "REQUESTED", AUTHORIZED", "SELECTED", "APPROVED", "REQUIRED", AND "PERMITTED" MEAN "DIRECTED BY THE ENGINEER", "REQUESTED BY THE ENGINEER", AND SIMILAR PHRASES.

APPROVED: THE TERM "APPROVED", WHERE USED IN CONJUNCTION WITH THE ENGINEER'S ACTION ON THE CONTRACTOR'S SUBMITTALS, APPLICATIONS, AND REQUESTS, IS LIMITED TO THE ENGINEER'S DUTIES AND RESPONSIBILITIES AS STATED IN GENERAL AND SUPPLEMENTARY CONDITIONS.

FURNISH: THE TERM "FURNISH" IS USED TO MEAN "SUPPLY AND DELIVER TO THE PROJECT SITE, READY FOR UNLOADING, UNPACKING, ASSEMBLY, INSTALLATION, AND SIMILAR OPERATIONS."

INSTALL: THE TERM "INSTALL" IS USED TO DESCRIBE OPERATIONS AT PROJECT SITE INCLUDING THE ACTUAL "UNLOADING, UNPACKING, ASSEMBLY, ERECTION, PLACING, ANCHORING, APPLYING, WORKING TO DIMENSION, FINISHING, CURING, PROTECTING, CLEANING, AND SIMILAR OPERATIONS."

PROVIDE: THE TERM "PROVIDE" MEANS "TO FURNISH AND INSTALL, COMPLETE AND READY FOR THE INTENDED USE."

INSTALLER: AN "INSTALLER" IS THE CONTRACTOR OR AN ENTITY ENGAGED BY THE CONTRACTOR, EITHER AS AN EMPLOYEE, SUBCONTRACTOR, OR SUB-SUBCONTRACTOR, FOR PERFORMANCE OF A PARTICULAR CONSTRUCTION ACTIVITY, INCLUDING INSTALLATION, ERECTION, APPLICATION, AND SIMILAR OPERATIONS. INSTALLERS ARE REQUIRED TO BE EXPERIENCED IN THE OPERATIONS THEY ARE ENGAGED TO PERFORM.

SYMBOL LEGEND

SYMBOL	DESCRIPTION
VALVES, METERS, AND GAUGES	
01	SHUT OFF VALVE
02	GATE VALVE
03	CHECK VALVE
04	AUTO 2-WAY VALVE
05	AUTO 3-WAY VALVE
06	GLOBE VALVE
07	BALL VALVE
08	RELIEF VALVE
10	PRESSURE REDUCING VALVE
13	ANGLE VALVE
14	VENTURI
15	BALANCING OR PLUG COCK
16	FLOW SETTER
17	EXPANSION VALVE (REFRIG.)
18	GAS COCK
20	STRAINER
21	GAUGE COCK
22	FLEXIBLE CONNECTION
23	PRESSURE GAUGE
24	THERMOMETER
25	VICTUALIC COUPLING
26	REDUCER CONCENTRIC
27	REDUCER ECCENTRIC
28	REFRIGERANT SITE GLASS
29	REFRIGERANT STRAINER
30	REFRIGERANT FILTER DRIER
31	90 DEG ELBOW UP
32	90 DEG ELBOW DOWN
33	90 DEG TEE UP
34	90 DEG TEE DOWN
35	UNION
36	CAPPED PIPE
37	ANCHOR

PLUMBING PIPING LEGEND

SYMBOL	DESCRIPTION
	SANITARY SEWER (SS)
	VENT (V)
	DOMESTIC COLD WATER (DCW)
	DOMESTIC HOT WATER (DHW)
	DOMESTIC HOT WATER RECIRC (DHWR)
RW	RAINWATER
SRW	SECONDARY RAINWATER
VTR	VENT THRU ROOF
(E)	EXISTING PIPE
(E)	EXISTING PIPE TO BE REMOVED
SS	SANITARY SEWER
FP	FIRE PROTECTION
NG	NATURAL GAS

ABBREVIATIONS

NOTE: ALL ABBREVIATIONS MAY NOT BE USED.

(E)	EXISTING
(F)	FUTURE
AD	ACCESS DOOR
AIR COND	AIR CONDITION(-ING,-ED)
APD	AIR PRESSURE DROP
BD	BALANCING DAMPER
BHP	BRAKE HORSE POWER
BTU	BRITISH THERMAL UNIT
BTUH	BTU/HOUR
CD	CONDENSATE DRAIN
CFH	CUBIC FEET PER HOUR
CFM	CUBIC FEET PER MINUTE
CLG	COOLING
COND	CONDENS(-ER, -ING, -ATION)
CV	CONTROL VALVE
DB	DRY BULB TEMPERATURE
DCW	DOMESTIC COLD WATER
DHW	DOMESTIC HOT WATER
DHWR	DOMESTIC HOT WATER RECIRC
DIA	DIAMETER
DP	PRESSURE DROP OR DIFFERENCE
EA	EXHAUST AIR
EER	ENERGY EFFICIENCY RATIO
EFF	EFFICIENCY
ELEC	ELECTRIC
ELEV	ELEVATION
ENT	ENTERING
EVAP	EVAPORAT(-E, -ING, -ED, -OR)
EWT	ENTERING WATER TEMPERATURE
EXT	EXTERNAL
FD	FIRE DAMPER
FLA	FULL LOAD AMPS
FPM	FEET PER MINUTE
FPS	FEET PER SECOND
FSD	FIRE SMOKE DAMPER
GAL	GALLON(S)
GPH	GALLONS PER HOUR
GPM	GALLONS PER MINUTE
HD	HEAD
HP	HORSEPOWER
HR	HOUR
HT	HEIGHT
HTG	HEATING
HZ	HERTZ (FREQUENCY)
ID	INSIDE DIAMETER
IN	INCH
KW	KILOWATT
LAT	LEAVING AIR TEMPERATURE
LBS	POUNDS
LVG	LEAVING
LWT	LEAVING WATER TEMPERATURE
MBH	THOUSAND BTU PER HOUR
MCA	MINIMUM CIRCUIT AMPS
MFR	MANUFACTUR(-ER, -ED)
NC	NOISE CRITERIA
NIC	NOT IN CONTRACT
NO	NORMALLY OPEN
NTS	NOT TO SCALE
OA	OUTSIDE AIR
OD	OUTSIDE DIAMETER
OZ	OUNCE
PD	PRESSURE DROP OR DIFFERENCE
PH	PHASE
PPM	PARTS PER MILLION
PSF	POUNDS PER SQUARE FOOT
PSI	POUNDS PER SQUARE INCH
PSIA	PSI ABSOLUTE
PSIG	PSI GAUGE
RA	RETURN AIR
RECIRC	RECIRCULATE
REFR	REFRIGERATION
REQD	REQUIRED
RPM	REVOLUTIONS PER MINUTE
SA	SUPPLY AIR
SCFM	STANDARD CUBIC FEET PER MINUTE
SCW	SOFT COLD WATER
SP	STATIC PRESSURE
SPEC(S)	SPECIFICATION(S)
SQ	SQUARE
SS	SOIL, WASTE
STD	STANDARD
TD	TEMP. DROP OR DIFF.
TEMP	TEMPERATURE
THERM	THERMAL
TOT	TOTAL
TSTAT	THERMOSTAT
V	VOLT
V	VENT
VEL	VELOCITY
VENT	VENT, VENTILATION
VERT	VERTICAL
VFD	VARIABLE FREQUENCY DRIVE
VOL	VOLUME
WB	WET BULB TEMP
WC	WATER COLUMN
WG	WATER GAUGE
WPD	WATER PRESSURE DROP
WT	WEIGHT
WTR	WATER

PLUMBING GENERAL NOTES

1. ALL DOMESTIC WATER PIPING TO BE COPPER. ALL HOT WATER AND HOT WATER RECIRCULATING PIPING TO BE INSULATED WITH 1" UP TO 1-1/4" PIPE AND 1-1/2" INSULATION FOR PIPING 1-1/2" AND LARGER. DOMESTIC COLD WATER PIPING TO BE INSULATED WITH 1/2" UP TO 1-1/4" PIPING AND 1" INSULATION FOR PIPING 1-1/2" OR LARGER.
2. DISSIMILAR METAL PIPING CONNECTIONS SHALL HAVE DIELECTRIC ISOLATORS.
3. ALL DOMESTIC WATER PIPING TO BE PRESSURE TESTED, CLEANED, AND DISINFECTED. PRESSURE TEST PER SPECIFICATIONS.
4. BALL VALVES SHALL BE FULL PORT AND LEAD FREE. PROVIDE WITH HANDLE/STEM EXTENSIONS FOR PROPER FUNCTION WHEN FULLY INSULATED. EXTENSIONS TO BE SEALED AND VAPOR PROOF.
5. ALL DOMESTIC WATER PIPING TO BE LOCATED ON WARM SIDE OF BUILDING ENVELOPE.
6. WATER HAMMER ARRESTORS SHALL BE SIZED AND INSTALLED PER PLUMBING AND DRAINAGE INSTITUTE (STANDARD PDI-WH 201) REQUIREMENTS IN ACCESSIBLE LOCATIONS ON THE COLD WATER AND HOT WATER PIPING WHERE FLUSH VALVES OR QUICK CLOSING VALVES ARE USED.
7. ALL GAS PIPING ON ROOF TO BE ON ROLLER PIPE SUPPORT. PROVIDE RUBBER BASE OR EXTRA LAYER OF MEMBRANE UNDER EACH PIPE SUPPORT. ALL PIPE SUPPORTS TO BE A MAXIMUM OF 10' ON CENTER.
8. ALL ROOF DRAIN PIPING (PRIMARY AND SECONDARY) LOCATED IN BUILDING ENVELOPE, INCLUDING ROOF DRAIN BOWLS TO BE INSULATED.
9. ALL DOMESTIC WASTE AND VENT PIPING TO BE CAST IRON OR PVC INSULATED TO MEET FLAME SPREAD AND SMOKE DEVELOPED INDEX.
10. THIS PROJECT WILL REQUIRE AFTER HOURS AND WEEKEND WORK TO RUN PIPING/DUCTWORK OR MODIFY SYSTEMS IN OR AFFECTING OCCUPIED SPACES. COORDINATE ALL SHUTDOWNS 72 HOURS IN ADVANCE WITH OWNER.
11. PROVIDE BALANCE REPORT OF DOMESTIC WATER RECIRCULATING SYSTEM TO ENGINEER. PROVIDE P&T PORTS AND PRESSURE GAUGES ON EACH SIDE OF RECIRCULATING PUMP. PROVIDE THERMOMETER ON DISCHARGE SIDE OF PUMP.
12. PROVIDE A MARINE TOPSIDE BLACK PAINT ON ALL NEW GAS PIPING.
13. FIELD VERIFY EXISTING FIELD CONDITIONS PRIOR TO ORDERING OR FABRICATING.
14. TEST WASTE AND VENT PIPING FOR LEAKAGE PER SPECIFICATIONS.
15. COORDINATE NECESSARY SAW CUTTING, BACKFILL, AND NEW CONCRETE WITH GENERAL.
16. PROVIDE A SAND BED WITH SIX (6") INCHES MINIMUM COVERAGE AROUND ALL BELOW GRADE PIPES. PROVIDE BACKFILL FREE OF BOULDERS LARGER THAN TWO (2") INCHES. COMPACT AND TEST ALL BACKFILL ACCORDING TO ASTM COMPACTION STANDARDS OR PROVIDE PEA GRAVEL BACKFILL. PROVIDE MINIMUM TRENCH WIDTH OF NOT LESS THAN 1.5 TIMES THE PIPE OUTSIDE DIAMETER PLUS 12 INCHES.
17. PIPING SHALL NOT BE SUPPORTED FROM THE ROOF DECK, JOIST BRIDGING OR OTHER PIPES. HANG PIPES FROM BEAMS, JOIST OR SUPPLEMENTARY STRUCTURAL MEMBERS. WHERE POSSIBLE INSTALL ALL PIPING WITHIN 12" FROM SUPPORTING STRUCTURE.
18. PROVIDE PORTABLE PUMP (LITTLE GIANT UPSP-5 OR EQUAL) TO OWNER FOR HYDRAULIC ELEVATOR SUMP.
19. ALL PIPING THROUGH A FOUNDATION WALL OR UNDER A FOOTING TO BE PROVIDED WITH PIPE SLEEVE 2 PIPE SIZES LARGER THAN PIPE PASSING THROUGH WALL OR UNDER FOOTING. SEAL WITH CAULK OR FOAM. PIPE SLEEVE UNDER FOOTING TO BE A MINIMUM OF 2" BELOW FOOTING. PIPE TO BE IRON AND EXTEND BEYOND THE WIDTH OF THE FOOTING AT A 45 DEGREE ON BOTH SIDES OF FOOTING.

PLUMBING GENERAL NOTES

1 THE PLUMBING DRAWINGS SHOW THE GENERAL DESIGN, ARRANGEMENT AND EXTENT OF THE PLUMBING SYSTEM. BECAUSE OF THE SMALL SCALE OF THE DRAWINGS, THESE DRAWINGS DO NOT SHOW ALL OFFSETS, BENDS OR ELBOWS NECESSARY FOR THE COMPLETE INSTALLATION IN THE SPACE PROVIDED. CONTRACTOR SHALL MAKE SUCH SLIGHT ALTERATIONS AS MAY BE NECESSARY TO MAKE THE SYSTEM COMPLETE AND OPERATIONAL IN ACCORDANCE WITH THE DESIGN INTENT. MAJOR DEVIATIONS SUCH AS CHANGES IN COMPONENT SIZES, WEIGHTS, QUANTITIES OR MATERIAL REQUIRE PRIOR APPROVAL BY THE DESIGN ENGINEER.

2 THE DRAWINGS AND SPECIFICATIONS HAVE BEEN PREPARED TO SUPPLEMENT EACH OTHER AND SHALL BE INTERPRETED AS AN INTEGRAL UNIT WITH THE ITEMS SHOWN ON ONE AND NOT THE OTHER BEING FURNISHED AND INSTALLED AS THOUGH SHOWN AND CALLED OUT IN BOTH.

3 THE ENTIRE PLUMBING INSTALLATION SHALL CONFORM TO THE REQUIREMENTS OF THE MOST RECENTLY ADOPTED BUILDING CODES, MECHANICAL CODE, PLUMBING CODE, ELECTRICAL CODE, AND ALL OTHER APPLICABLE CITY, COUNTY, STATE, AND FEDERAL CODES AND REGULATIONS IN EFFECT.

4 THE ENTIRE PLUMBING INSTALLATION SHALL CONFORM TO ANY CODES, RULES, REGULATIONS AND REQUIREMENTS OF THE BUILDING OWNER.

5 PRIOR TO FABRICATION AND INSTALLATION OF ANY PLUMBING COMPONENT THE CONTRACTOR SHALL COORDINATE THE INSTALLATION OF ALL PLUMBING WORK WITH ALL OTHER BUILDING TRADES, INCLUDING BUILDING TRADES HIRED DIRECTLY BY THE OWNER. WHERE CONFLICTS MAY OCCUR, THEY SHALL BE RESOLVED PRIOR TO INSTALLATION.

6 ALL PLUMBING INFORMATION IS NOT SHOWN ON THE PLUMBING DRAWINGS. THE CONTRACTOR SHALL BE RESPONSIBLE FOR COORDINATING ALL INFORMATION ON ALL OTHER CONSTRUCTION DOCUMENTS.

7 . THE CONTRACTOR SHALL BE RESPONSIBLE TO REVIEW AND USE, WHERE APPROPRIATE, ALL THE PLUMBING DETAILS SHOWN ON THE DRAWINGS. DETAILS MAY OR MAY NOT BE CALLED OUT ON THE DRAWINGS WITH SYMBOLS OR KEYED NOTES. ANY CHANGES RESULTING FROM FAILURE TO INSTALL THE PLUMBING SYSTEM WITHOUT USING THE INCLUDED DETAILS SHALL BE THE RESPONSIBILITY OF THE CONTRACTOR.

8 ANY PART OF THE PLUMBING INSTALLATION THAT FAILS, IS UNFIT, OR BECOMES DAMAGED DURING CONSTRUCTION SHALL BE REPAIRED OR REPLACED BY THE CONTRACTOR AT NO ADDITIONAL COST TO THE OWNER.

9 PROVIDE PROPER PROVISIONS FOR EXPANSION, CONTRACTION, OR MOVEMENT OF ALL PIPING.

10 PROVIDE LARGE ENOUGH PIPE SLEEVES THROUGH WALL OR FLOOR TO ALLOW FOR ANTICIPATED DIFFERENTIAL MOVEMENT.

11 ALL PIPING SHALL BE SUPPORT WITH CLEVIS HANGERS (MSS TYPE 1). PERFORATED METAL STRAPS OR PLASTIC STRAPPING (PLUMBER TAPE) SHALL NOT BE USED TO SUPPORT OR BRACE ANY PIPE.

12 PROVIDE PIPE HANGERS WITHIN 18-INCHES OF ALL CHANGES OF DIRECTION.

13 PROVIDE SWAY BRACING FOR ALL PIPING 4" AND LARGER AT ALL CHANGES IN DIRECTION GREATER THAN 45-DEGREES.

14 ALL STEEL CLEVIS HANGERS USED TO SUPPORT COPPER PIPING SHALL BE COPPER OR PLASTIC COATED.

15 COPPER PIPING SHALL NOT COME IN CONTACT WITH FIRE TREATED LUMBER. PROVIDE ½" THICK SLIP-ON CLOSED CELL INSULATION WHERE COPPER PIPING IS ADJACENT TO FIRE TREATED LUMBER. CLOSED CELL INSULATION SHALL EXTEND A MINIMUM OF 1-1/2" PAST LUMBER.

16 ALL EXPOSED PIPING SHALL BE INSTALLED IN A NEATLY ARRANGED MANNER PARALLEL TO THE BUILDING STRUCTURE.

17 ALL EXPOSED DOMESTIC WATER PIPE IN OCCUPIED SPACES SHALL BE POLISHED CHROME PLATED.

18 ALL EXPOSED DRAINAGE PIPING IN OCCUPIED SPACES INCLUDING TRAPS UNDER SINKS SHALL BE POLISHED CHROME PLATED.

19 DRAWINGS SHOW GENERAL ARRANGEMENT OF THE DRAIN WASTE AND VENT SYSTEM WITH THE REQUIRED CLEANOUTS. CONTRACTOR SHALL PROVIDE ALL ADDITIONAL CLEANOUTS AS REQUIRED BY THE PLUMBING CODE.

20 ALL SANITARY DRAINAGE SYSTEM PIPING 3" AND LARGER SHALL BE SLOPED IN DIRECTION OF FLOW AT A MINIMUM OF 1/8" PER FOOT.

21 ALL SANITARY DRAINAGE SYSTEM PIPING SMALLER THAN 3" SHALL BE SLOPED IN DIRECTION OF FLOW AT A MINIMUM OF 1/4" PER FOOT.

22 SLOPE VENT SYSTEM TOWARDS DRAINAGE SYSTEM.

23 SIMILAR EQUIPMENT SHALL BE OF THE SAME MANUFACTURER.

24 ALL EQUIPMENT SHALL PROVIDE THE SCHEDULED PERFORMANCE AT THE JOB SITE ELEVATION.

25 FIXTURE AND EQUIPMENT MODEL NUMBERS SHOWN IN PLUMBING FIXTURE SCHEDULE AND PLUMBING EQUIPMENT SCHEDULE ARE SHOWN TO ESTABLISH THE TYPE OF PRODUCT THAT SHALL BE USED. THE SELECTED PRODUCT SHALL MEET THE SCHEDULED PERFORMANCE DATA SHOWN ON THE SCHEDULE EVEN IF A DIFFERENT MODEL IS SUPPLIED THAT IS DIFFERENT THAN THAT SCHEDULED.

26 ALL EQUIPMENT SHALL BE INSTALLED IN STRICT ACCORDANCE WITH THE EQUIPMENT MANUFACTURER'S INSTALLATION INSTRUCTIONS. PROVIDE ALL NECESSARY FITTINGS, TRANSITIONS, VALVES AND OTHER DEVICES AND ACCESSORIES REQUIRED FOR A COMPLETE, WORKABLE INSTALLATION.

27 SEE "PLUMBING FIXTURE SCHEDULE" FOR INDIVIDUAL TRAPS, WASTE, VENT, AND DOMESTIC WATER PIPING FOR INDIVIDUAL FIXTURES.

28 ALL PLUMBING EQUIPMENT SHALL BE LISTED AND LABELED BY AN APPROVED TESTING AGENCY.

29 FIXTURES, EQUIPMENT AND PIPING INSTALLATION SHALL MEET NSF STANDARDS.

PLUMBING SHEET INDEX

PE001	PLUMBING COVER SHEET
PE501	PLUMBING DETAILS
PE601	PLUMBING SCHEDULES
PD100	OVERALL PLUMBING DEMOLITION PLAN
PD101	LEVEL 1 PLUMBING DEMOLITION PLAN
PD102	LEVEL 2 PLUMBING DEMOLITION PLAN
PD103	ROOF PLUMBING DEMOLITION PLAN
PL100	OVERALL PLUMBING PLAN
PL101	LEVEL 1 PLUMBING PLAN - WATER
PL102	LEVEL 2 PLUMBING PLAN - WATER
PL103	LEVEL 1 PLUMBING PLAN - DWV
PL104	LEVEL 2 PLUMBING PLAN - DWV
PL105	ROOF PLUMBING PLAN

ARCHITECT 1877

ajc architects

703 east 1700 south
salt lake city, utah 84105
ph: 801.466.8818
fx: 801.466.4411
www.ajcarchitects.com

CONSULTANT

SPECTRUM ENGINEERS
324 S. State St., Suite 400
Salt Lake City, UT 84111
800-678-7077
801-328-5151
fax: 801-328-5155
www.spectrum-engineers.com

OWNER INFORMATION

PROJECT DESCRIPTION

DUMKE GYMNASTICS TRAINING CENTER

1825 E. SOUTH CAMPUS DRIVE
SALT LAKE CITY, UT 84112

AHJ STAMP

PROFESSIONAL ENGINEER
10-06-21
RYAN BOOGAARD
NO. 8677128
STATE OF UTAH

SHEET NAME:

PLUMBING COVER SHEET

REVISIONS

MARK	DATE	DESCRIPTION

ISSUE DATA

ISSUE DATE: 10.01.21
ISSUE TYPE: CD
DRAWN BY: CLD
CHECKED BY: RHB
CLIENT PROJECT#:

SHEET NUMBER:

PE001

10/6/2021 2:56:05 PM C:\Users\cld\Documents\20191093 MECH Central_cldUPA79.rvt

ALL IDEAS, DESIGNS, ARRANGEMENTS AND PLANS INDICATED OR REPRESENTED BY THIS DRAWING ARE OWNED BY AND THE PROPERTY OF AJC ARCHITECTS PC AND WERE CREATED, EVOLVED, AND DEVELOPED FOR USE ON AND IN CONNECTION WITH THE SPECIFIED PROJECT. NONE OF THE IDEAS, DESIGNS, ARRANGEMENTS OR PLANS SHALL BE USED BY OR DISCLOSED TO ANY PERSON, FIRM, OR CORPORATION FOR ANY PURPOSE WHATSOEVER WITHOUT WRITTEN CONSENT OF AJC ARCHITECTS PC. WRITTEN DIMENSIONS ON THESE DRAWINGS SHALL HAVE PRECEDENCE OVER SCALE DIMENSIONS. CONTRACTORS SHALL VERIFY AND BE RESPONSIBLE FOR ALL DIMENSIONS AND CONDITIONS ON THE JOB AND THIS OFFICE MUST BE NOTIFIED OF ANY VARIATION FROM THE DIMENSIONS AND CONDITIONS SHOWN BY THESE DRAWINGS. WARNING: REPRODUCTION HEREOF IS A CRIMINAL OFFENCE UNDER 18 U.S.C. SEC. 506. UNAUTHORIZED DISCLOSURE MAY CONSTITUTE TRADE SECRET MISAPPROPRIATION IN VIOLATION OF 17 CFR 2-311 ET. SEQ. AND OTHER LAWS.

NOTES:
METER TO HAVE THE CAPABILITY OF COMMUNICATION WITH THE UNIVERSITY'S AUTOMATED ENERGY INFORMATION SYSTEM USING A DIGITAL CONTACT CLOSURE PULSE, A 4-20 MILLIAMP SIGNAL, OR MODBUS RTU PROTOCOL WITHOUT THE NEED FOR A PURCHASE OF AN UPGRADE AFTER INSTALLATION.

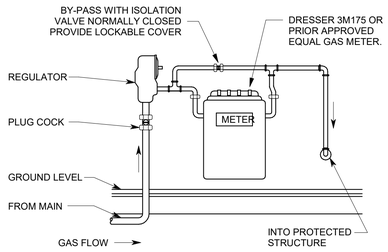

D1 GAS METER DETAIL
1/8" = 1'-0"

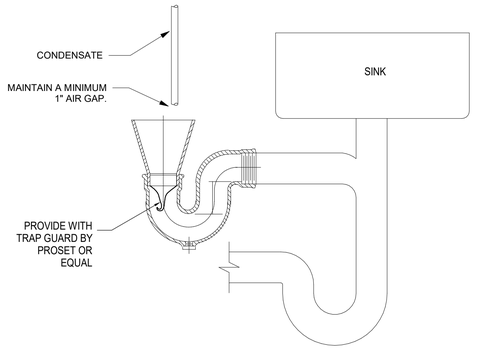

D2 FUNNEL DRAIN DETAIL
1/8" = 1'-0"

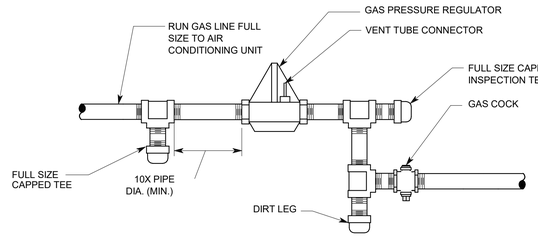

D3 GAS PRESSURE REGULATOR DETAIL
1/8" = 1'-0"

NOTE: WATER METER TO BE LOCATED APPROXIMATELY 4' A.F.F. STACK AS REQUIRED TO FIT IN SPACE SHOWN ON DRAWINGS.

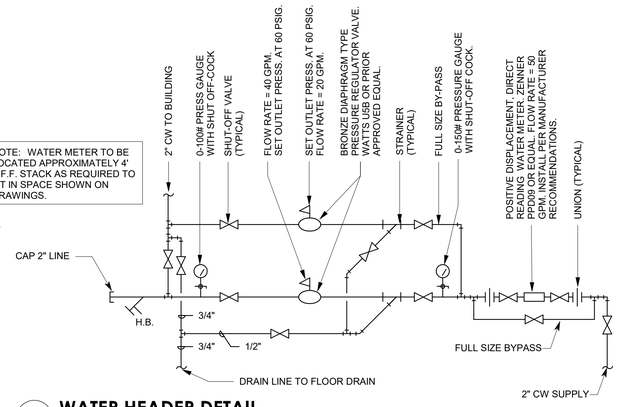

D4 WATER HEADER DETAIL
1/8" = 1'-0"

NOTES:
1. SUPPORTED PIPE AT ALL ELBOWS AND AT A MAXIMUM SPACING OF 6' ON CENTER.
2. PIPE SUPPORT BLOCK SHALL BE A MINIMUM OF ONE PIPE SIZE LARGER THAN PIPE .
3. DO NOT ATTACH PIPESTANDS TO ROOF.

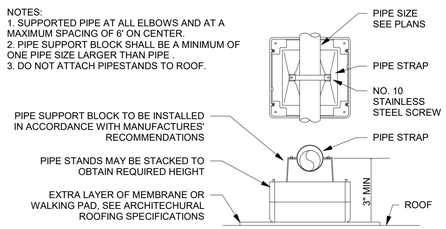

C1 ROOF PIPING DETAIL
1/8" = 1'-0"

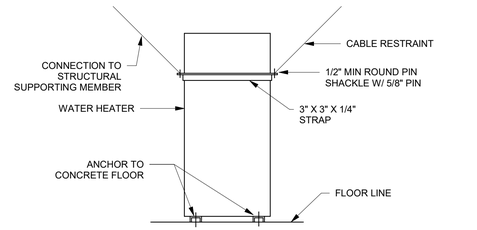

C2 WATER HEATER BRACING DETAIL
1/8" = 1'-0"

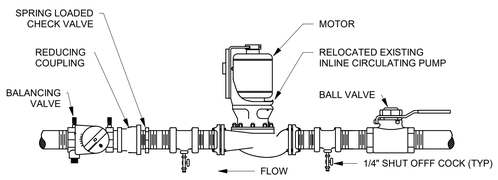

C3 PIPE MOUNTED CIRCULATING PUMP
1/8" = 1'-0"

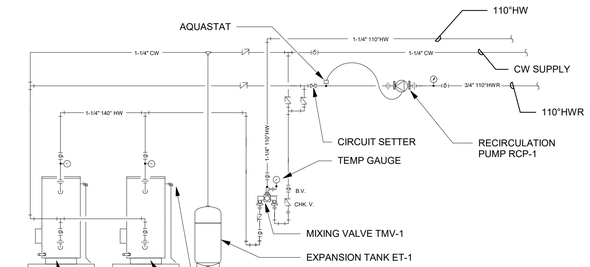

C4 WATER HEATER PIPING SCHEMATIC
3/16" = 1'-0"

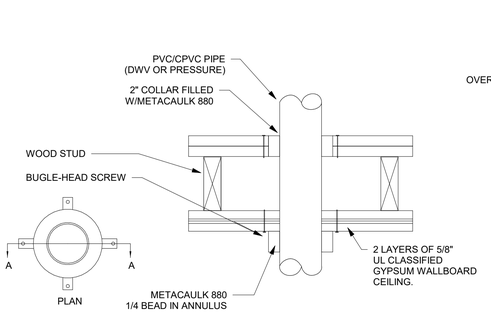

B1 PIPE COLLAR DETAIL
1/8" = 1'-0"

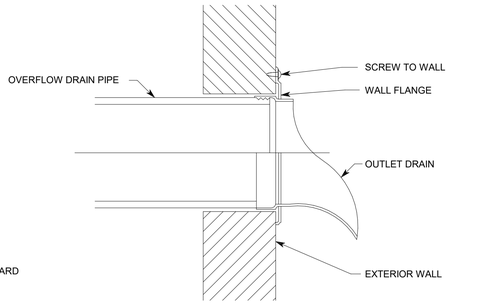

B2 DOWNSPOUT NOZZLE DETAIL
1/8" = 1'-0"

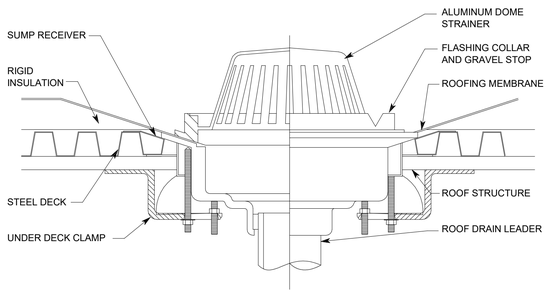

B3 ROOF DRAIN DETAIL
1/8" = 1'-0"

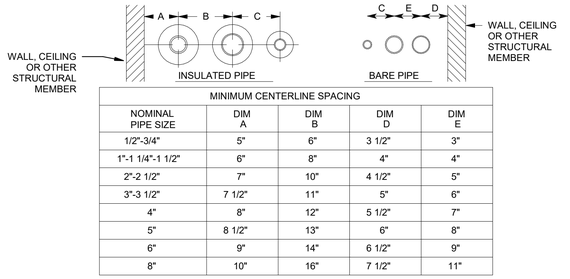

MINIMUM CENTERLINE SPACING				
NOMINAL PIPE SIZE	DIM A	DIM B	DIM D	DIM E
1/2"-3/4"	5"	6"	3 1/2"	3"
1"-1 1/4"-1 1/2"	6"	8"	4"	4"
2"-2 1/2"	7"	10"	4 1/2"	5"
3"-3 1/2"	7 1/2"	11"	5"	6"
4"	8"	12"	5 1/2"	7"
5"	8 1/2"	13"	6"	8"
6"	9"	14"	6 1/2"	9"
8"	10"	16"	7 1/2"	11"

B4 PIPE CLEARANCES DETAIL
1/8" = 1'-0"

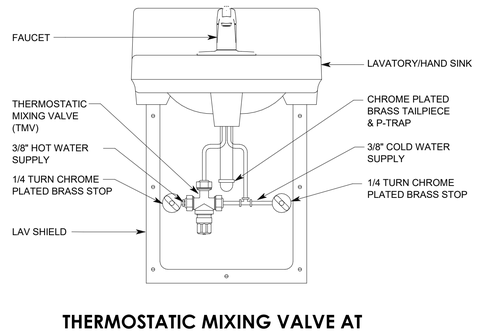

A1 WALL CLEANOUT DETAIL
1/8" = 1'-0"

THERMOSTATIC MIXING VALVE AT HAND SINK
A2
1/4" = 1'-0"

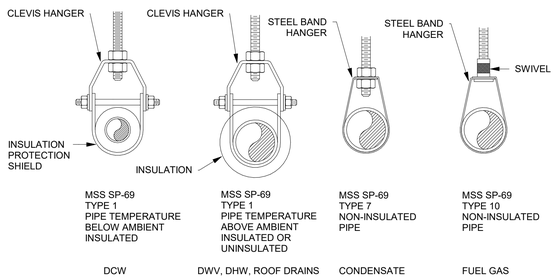

A3 PIPE HANGER DETAIL
1/8" = 1'-0"

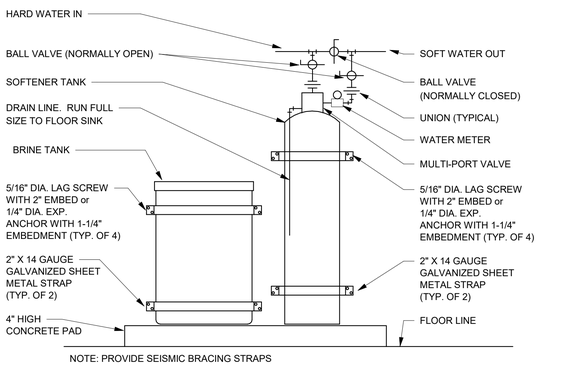

A4 WATER SOFTENER DETAIL
1/8" = 1'-0"

ARCHITECT 1877
ajc architects
703 east 1700 south
salt lake city, utah 84105
ph: 801.466.8818
fx: 801.466.4411
www.ajcarchitects.com

CONSULTANT
SPECTRUM ENGINEERS
324 S. State St., Suite 400
Salt Lake City, UT 84111
800-678-7077
801-328-5151
fax: 801-328-5155
www.spectrum-engineers.com

OWNER INFORMATION

PROJECT DESCRIPTION
DUMKE GYMNASTICS TRAINING CENTER
1825 E. SOUTH CAMPUS DRIVE
SALT LAKE CITY, UT 84112

AHJ STAMP

PROFESSIONAL ENGINEER 10-06-21 RYAN BOOGAARD NO. 8677128 STATE OF UTAH

SHEET NAME:
PLUMBING DETAILS

REVISIONS

MARK	DATE	DESCRIPTION

ISSUE DATA

ISSUE DATE:	10.01.21
ISSUE TYPE:	CD
DRAWN BY:	CLD
CHECKED BY:	RHB
CLIENT PROJECT#:	

SHEET NUMBER:
PE501

ALL IDEAS, DESIGNS, ARRANGEMENTS AND PLANS INDICATED OR REPRESENTED BY THIS DRAWING ARE OWNED BY AND THE PROPERTY OF AJC ARCHITECTS PC AND WERE CREATED, EVOLVED, AND DEVELOPED FOR USE ON, AND IN CONNECTION WITH THE SPECIFIED PROJECT. NONE OF THE IDEAS, DESIGNS, ARRANGEMENTS OR PLANS SHALL BE USED BY OR DISCLOSED TO ANY PERSON, FIRM, OR CORPORATION FOR ANY PURPOSE WHATSOEVER WITHOUT WRITTEN CONSENT OF AJC ARCHITECTS PC. WRITTEN DIMENSIONS ON THESE DRAWINGS SHALL HAVE PRECEDENCE OVER SCALE DIMENSIONS. CONTRACTORS SHALL VERIFY AND BE RESPONSIBLE FOR ALL DIMENSIONS AND CONDITIONS ON THE JOB, AND THIS OFFICE MUST BE NOTIFIED OF ANY VARIATION FROM THE DIMENSIONS AND CONDITIONS SHOWN BY THESE DRAWINGS. WARNING: REPRODUCTION HEREOF IS A CRIMINAL OFFENCE UNDER 18 U.S.C. SEC. 506. UNAUTHORIZED DISCLOSURE MAY CONSTITUTE TRADE SECRET MISAPPROPRIATION IN VIOLATION OF C.2A-2-311 ET. SEQ. AND OTHER LAWS.

10/6/2021 2:56:08 PM C:\Users\cld\Documents\20191093 MECH Central_cldUPA79.rvt

WATER HEATER SCHEDULE

LABEL	TYPE	TANK SIZE (GAL)	RECOVERY AT 90 DEG F (GPH)	EFFICIENCY	GAS INPUT(BTUH)	DESIGN PRESSURE	DRY WEIGHT (LBS)	VOLTAGE	PHASE	Hz	MANUFACTURER	MODEL	REMARKS
WH-1	POWER DIRECT VENT	50	39	0.88 UEF	100000.0	60.00 psi	275	120 V	1	60 Hz	STATE	GP6 50 YTPDT	1,2,3,4
WH-2	POWER DIRECT VENT	50	39	0.88 UEF	100000.0	60.00 psi	275	120 V	1	60 Hz	STATE	GP6 50 YTPDT	1,2,3,4

1. PROVIDE WITH CONCENTRIC VENT KIT. INSTALL PER MANUFACTURER RECOMMENDATIONS.
2. ACCEPTABLE MANUFACTURERS: LOCHINVAR, AO SMITH, BRADFORD WHITE, RHEEM, BOCK OR PRIOR APPROVED EQUAL.
3. PROVIDE WITH UPPER AND LOWER SEISMIC STRAPS WITH TWO 5/16" LAG SCREWS HAVING 2" OF EMBED AT EACH CONNECTION LOCATION.
4. WATER HEATER TO BE ULTRA LOW NOX (15 PMM AT 3% O2 UP TO 75 MBH AND 20 PMM AT 3% O2).

RECIRCULATION PUMP SCHEDULE

LABEL	PUMP TYPE	GPM	PUMP HD. (FT)	TEMP. RANGE (°F)	VOLT	PH	Hz	WATTS	MANUFACTURER	MODEL	REMARKS
RCP-1	IN-LINE ECM MOTOR	1	4	110 - 120	115 V	1	60 Hz	60	BELL & GOSSETT	ECOCIRC 19-16	1,2,3,4,5

1. BALANCE DOMESTIC HOT WATER RECIRCULATING LINE. PROVIDE BALANCING VALVE. PROVIDE P&T PORT ON INLET AND DISCHARGE OF PUMP. PROVIDE BALANCE REPORT TO ENGINEER.
2. PROVIDE WITH BRONZE, PLASTIC, OR STAINLESS STEEL IMPELLER AND STAINLESS STEEL BODY.
3. ACCEPTABLE MANUFACTURERS: BELL & GOSSETT, ARMSTRONG, TACO, GRUNDFOS OR PRIOR APPROVED EQUAL.
4. RUN IN CONSTANT PRESSURE MODE IN CONJUNCTION WITH CALEFFI MODEL 116 THERMAL BALANCING VALVES TO ALLOW PUMP TO RUN AT LOWER SPEED WHEN HOT WATER IS RUNNING.
5. PROVIDE CALEFFI THERMAL BALANCING VALVE SET TO 110 F AT EACH CONNECTION POINT OF RECIRC LINE TO HOT WATER LINE.

PLUMBING FIXTURE SCHEDULE

LABEL	DESCRIPTION	WASTE	VENT	CW	HW	MANUFACTURER	MODEL	REMARKS
(E)FS-1	FLOOR SINK	3"	0"	0"	0"	ZURN	Z1900	PROVIDE WITH TRAP GUARD BY PROSET OR APPROVED EQUAL.
DF-1	BI-LEVEL ELECTRIC WATER COOLER	2"	1 1/2"	1/2"	0"	ELKAY	EZSTL8	ELECTRICAL DATA: 120/1, 4 FLA, 370 WATTS
FD-1	FLOOR DRAIN	2"	2"	0"	0"	ZURN	Z415-BZ1	PROVID WITH TRAP GUARD BY PROSET OR APPROVED EQUAL.
FD-2	SHOWER FLOOR DRAIN	2"	2"	0"	0"	ZURN	EZ1-AB3	PROVID WITH TRAP GUARD BY PROSET OR APPROVED EQUAL.
HB-1	HOSEBIBB - FREEZEPROOF ANTI-SIPHON	0"	0"	3/4"	0"	WOODFORD	MODEL B65	HOSEBIBB TO BE FREEZEPROOF AND ANTI-SIPHONING.
HY-1	YARD HYDRANT - FREEZELESS	0"	0"	3/4"	0"	WOODFORD	RHY2-MS	PROVIDE WITH VACUUM BREAKER
L-1	UNDERMOUNT ADA LAVATORY	2"	1 1/2"	1/2"	1/2"	FIXTURE: KOHLER FAUCET: KOHLER INSULATION: TRUEBRO TMV: WEBSTONE	FIXTURE: K-2882 FAUCET: K-13461 INSULATION: LAV GAURD 2 TMV: H-77211W-TG	TMV TO BE ASSE 1070 COMPLIANT.
L-2	WALL MOUNT ADA LAVATORY	2"	1 1/2"	1/2"	1/2"	FIXTURE: KOHLER FAUCET: KOHLER INSULATION: TRUEBRO TMV: WEBSTONE	FIXTURE: K-2035-1 FAUCET: K013461 INSULATION: LAVGUARD 2	TMV TO BE ASSE 1070 COMPLIANT.
MS-1	SERVICE SINK	3"	2"	3/4"	3/4"	FIXTURE: MUSTEE FAUCET:KOHLER	FIXTURE: 63M FAUCET: K-8907	PROVIDE HOSE AND HOSE HOLDER, MOP HANGER, BUMPER AND WALL GUARDS
RD-1	ROOF DRAIN	4"	0"	0"	0"	ZURN	Z100	N/A
S-1	HAND SINK	2"	1 1/2"	1/2"	1/2"	FIXTURE: ELKAY FAUCET: CHICAGO FAUCETS INSULATION: TRUEBRO TMV: WEBSTONE	FIXTURE: LSR2722 FAUCET: 802-VE2805ABCP INSULATION: LAVGUARD2 TMV: H-77211W-TG	TMV TO BE ASSE 1070 COMPLIANT.
SH-1	SHOWER (ACCESSIBLE)	0"	0"	1/2"	1/2"	KOHLER	K-10827-4	MOUNT IN ACCORDANCE WITH ADA REQUIREMENTS.
WC-1	WALL MOUNT FLUSH VALVE WATER CLOSET (ACCESSIBLE)	4"	2"	1 1/2"	0"	FIXTURE: KOHLER FLUSH VAVLE: ZURN SEAT: BEMIS	FIXTURE: K-4325-SS FLUSH VALVE: ZER6000-CP-WS1 SEAT: 1955CTJ	
WMB-1	WASHING MACHINE OUTLET BOX	3"	0"	1/2"	1/2"	WATER-TITE	W4700 HA SERIES	PROVIDE WATER HAMMER ARRESTORS ENSURE 1" MIN. AIR GAP IS PROVIDED FOR WASTE

MIXING VALVE SCHEDULE

LABEL	DESCRIPTION	OUTLET	CW INLET	HW INLET	DESIGN FLOW	PRESSURE DROP	MANUFACTURER	MODEL
TMV-1	THERMOSTATIC MIXING VALVE W/ BYPASS	1 1/2"	1 1/4"	1 1/4"	35 GPM	5.00 psi	LAWLER SERIES 66	UNIT NO. 83004. VALVE NO. 66-125.

WATER SOFTENER SCHEDULE

LABEL	SYSTEM TANK DIAMETER	PEAK FLOW RATE	SALT CAP. (GRAINS)	GRAINS USED PER CLEANING		VOLTAGE	PHASE	Hz	MANUFACTURER	MODEL
				MAX	MIN					
WS-1	10"	30 GPM	50000	22	12	120 V	1	60 Hz	CRUSADER	CS-D-50

WATER HAMMER ARRESTOR SCHEDULE

LABEL	ARRESTOR SIZE	PRESSURE RATING	MANUFACTURER	MODEL
HA-1	A	60.00 psi	SIOUX CHIEF	653-A
HA-2	AA	60.00 psi	SIOUX CHIEF	653-A
HA-3	B	60.00 psi	SIOUX CHIEF	653-B

EXPANSION TANK SCHEDULE

LABEL	TANK VOLUME (GAL)	MAX ACCEPT. VOLUME (GAL)	DESIGN PRESSURE	DRY WEIGHT (LBS)	MANUFACTURER	MODEL
ET-1	10.3	10	60.00 psi	30	THERM-X-TROL	ST-25V

ARCHITECT 1877
ajc architects
703 east 1700 south
salt lake city, utah 84105
ph: 801.466.8818
fx: 801.466.4411
www.ajcarchitects.com

CONSULTANT
SPECTRUM ENGINEERS
324 S. State St., Suite 400
Salt Lake City, UT 84111
800-678-7077
801-328-5151
fax: 801-328-5155
www.spectrum-engineers.com

OWNER INFORMATION

PROJECT DESCRIPTION

DUMKE GYMNASTICS TRAINING CENTER

1825 E. SOUTH CAMPUS DRIVE
SALT LAKE CITY, UT 84112

AHJ STAMP

PROFESSIONAL ENGINEER
10-06-21
RYAN BOOGAARD
NO. 8677128
STATE OF UTAH

SHEET NAME:
PLUMBING SCHEDULES

REVISIONS

MARK	DATE	DESCRIPTION

ISSUE DATA

ISSUE DATE: 10.01.21
ISSUE TYPE: CD
DRAWN BY: CLD
CHECKED BY: RHB
CLIENT PROJECT#:

SHEET NUMBER:
PE601

10/6/2021 2:55:54 PM C:\Users\cld\Documents\20191093 MECH Central_cldUPA79.rvt

ALL IDEAS, DESIGNS, ARRANGEMENTS AND PLANS INDICATED OR REPRESENTED BY THIS DRAWING ARE OWNED BY AND THE PROPERTY OF AJC ARCHITECTS PC AND WERE CREATED, EVOLVED, AND DEVELOPED FOR USE ON AND IN CONNECTION WITH THE SPECIFIED PROJECT. NONE OF THE IDEAS, DESIGNS, ARRANGEMENTS OR PLANS SHALL BE USED BY OR DISCLOSED TO ANY PERSON, FIRM, OR CORPORATION FOR ANY PURPOSE WHATSOEVER WITHOUT WRITTEN CONSENT OF AJC ARCHITECTS PC. WRITTEN DIMENSIONS ON THESE DRAWINGS SHALL HAVE PRECEDENCE OVER SCALE DIMENSIONS. CONTRACTORS SHALL VERIFY AND BE RESPONSIBLE FOR ALL DIMENSIONS AND CONDITIONS ON THE JOB AND THIS OFFICE MUST BE NOTIFIED OF ANY VARIATION FROM THE DIMENSIONS AND CONDITIONS SHOWN BY THESE DRAWINGS. WARNING: REPRODUCTION HEREOF IS A CRIMINAL OFFENSE UNDER 18 U.S.C. SEC. 506. UNAUTHORIZED DISCLOSURE MAY CONSTITUTE TRADE SECRET MISAPPROPRIATION IN VIOLATION OF 12-24-3 H.I.R.T. SEC. AND OTHER LAWS.

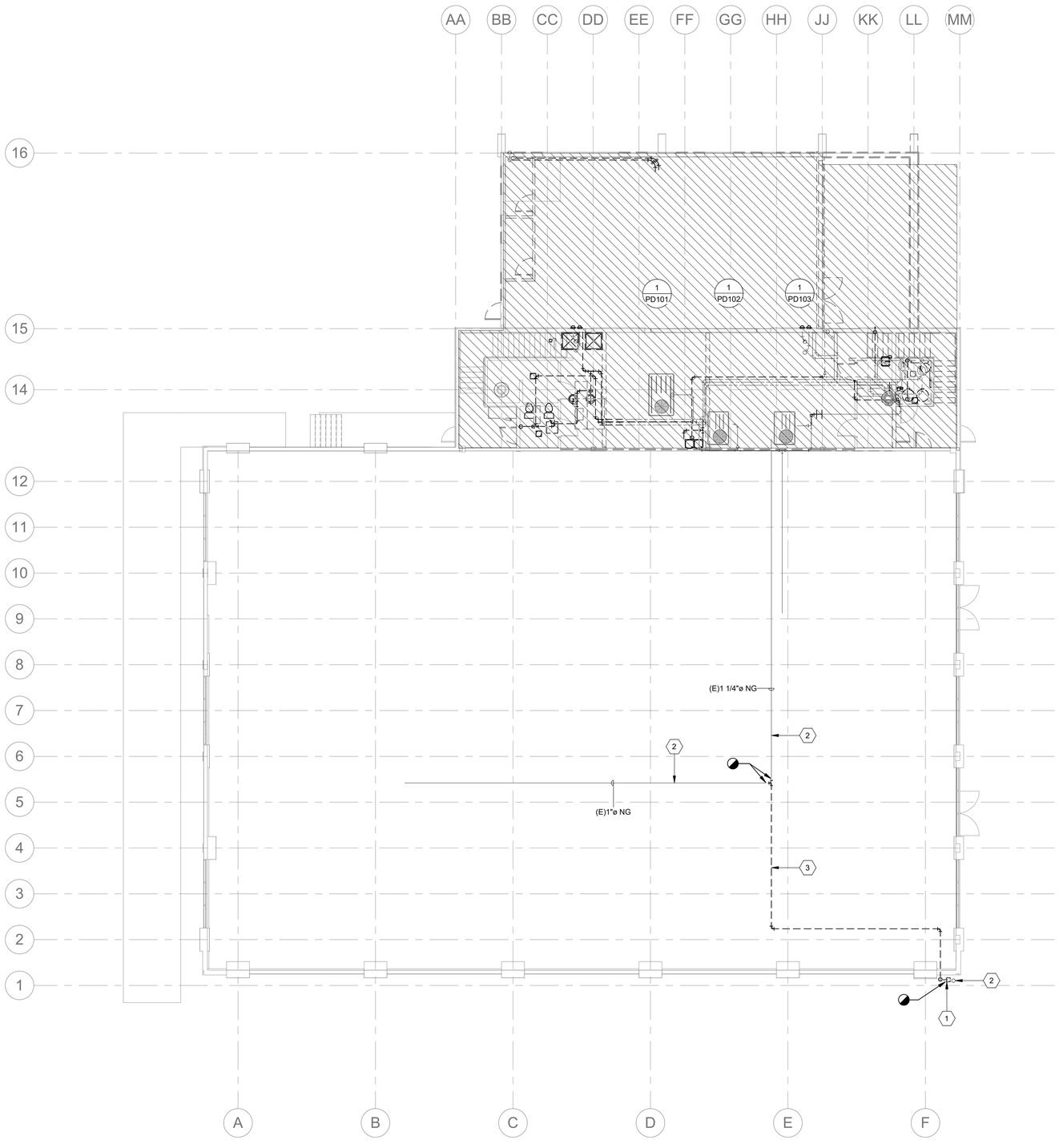

1 **OVERALL DEMOLITION PLAN**
1" = 10'-0"

0' 2' 4' 8' 12'
SCALE : 1/4" = 1'-0"

SHEET KEYNOTES

1 EXISTING GAS METER TO BE DEMOLISHED AND REPLACED. SEE SHEET PL100.

2 EXISTING PIPING TO REMAIN.

3 EXISTING PIPING TO BE DEMOLISHED.

ARCHITECT 1877

ajc architects

703 east 1700 south
salt lake city, utah 84105
ph: 801.466.8818
fx: 801.466.4411
www.ajcarchitects.com

CONSULTANT

SPECTRUM ENGINEERS
324 S. State St., Suite 400
Salt Lake City, UT 84111
800-678-7077
801-328-5151
fax: 801-328-5155
www.spectrum-engineers.com

OWNER INFORMATION

PROJECT DESCRIPTION

DUMKE GYMNASTICS TRAINING CENTER

1825 E. SOUTH CAMPUS DRIVE
SALT LAKE CITY, UT 84112

AHJ STAMP

PROFESSIONAL ENGINEER
10-06-21
RYAN BOOGAARD
NO. 8677128
STATE OF UTAH

SHEET NAME:
OVERALL PLUMBING DEMOLITION PLAN

REVISIONS

MARK	DATE	DESCRIPTION

ISSUE DATA

ISSUE DATE:	10.01.21
ISSUE TYPE:	CD
DRAWN BY:	CLD
CHECKED BY:	RHB
CLIENT PROJECT#:	

SHEET NUMBER:

PD100

ALL IDEAS, DESIGNS, ARRANGEMENTS AND PLANS INDICATED OR REPRESENTED BY THIS DRAWING ARE OWNED BY AND THE PROPERTY OF AJC ARCHITECTS PC AND WERE CREATED, EVOLVED, AND DEVELOPED FOR USE ON AND IN CONNECTION WITH THE SPECIFIED PROJECT. NONE OF THE IDEAS, DESIGNS, ARRANGEMENTS OR PLANS SHALL BE USED BY OR DISCLOSED TO ANY PERSON, FIRM, OR CORPORATION FOR ANY PURPOSE WHATSOEVER WITHOUT WRITTEN CONSENT OF AJC ARCHITECTS PC. WRITTEN DIMENSIONS ON THESE DRAWINGS SHALL HAVE PRECEDENCE OVER SCALE DIMENSIONS. CONTRACTORS SHALL VERIFY AND BE RESPONSIBLE FOR ALL DIMENSIONS AND CONDITIONS ON THE JOB AND THIS OFFICE MUST BE NOTIFIED OF ANY VARIATION FROM THE DIMENSIONS AND CONDITIONS SHOWN BY THESE DRAWINGS. WARNING: REPRODUCTION HEREOF IS A CRIMINAL OFFENCE UNDER 18 U.S.C. SEC. 506. UNAUTHORIZED DISCLOSURE MAY CONSTITUTE TRADE SECRET MISAPPROPRIATION IN VIOLATION OF 17-24-2-31 ET. SEQ. AND OTHER LAWS.

10/6/2021 2:55:57 PM C:\Users\cld\Documents\20191093 MECH Central_cldUPA79.rvt

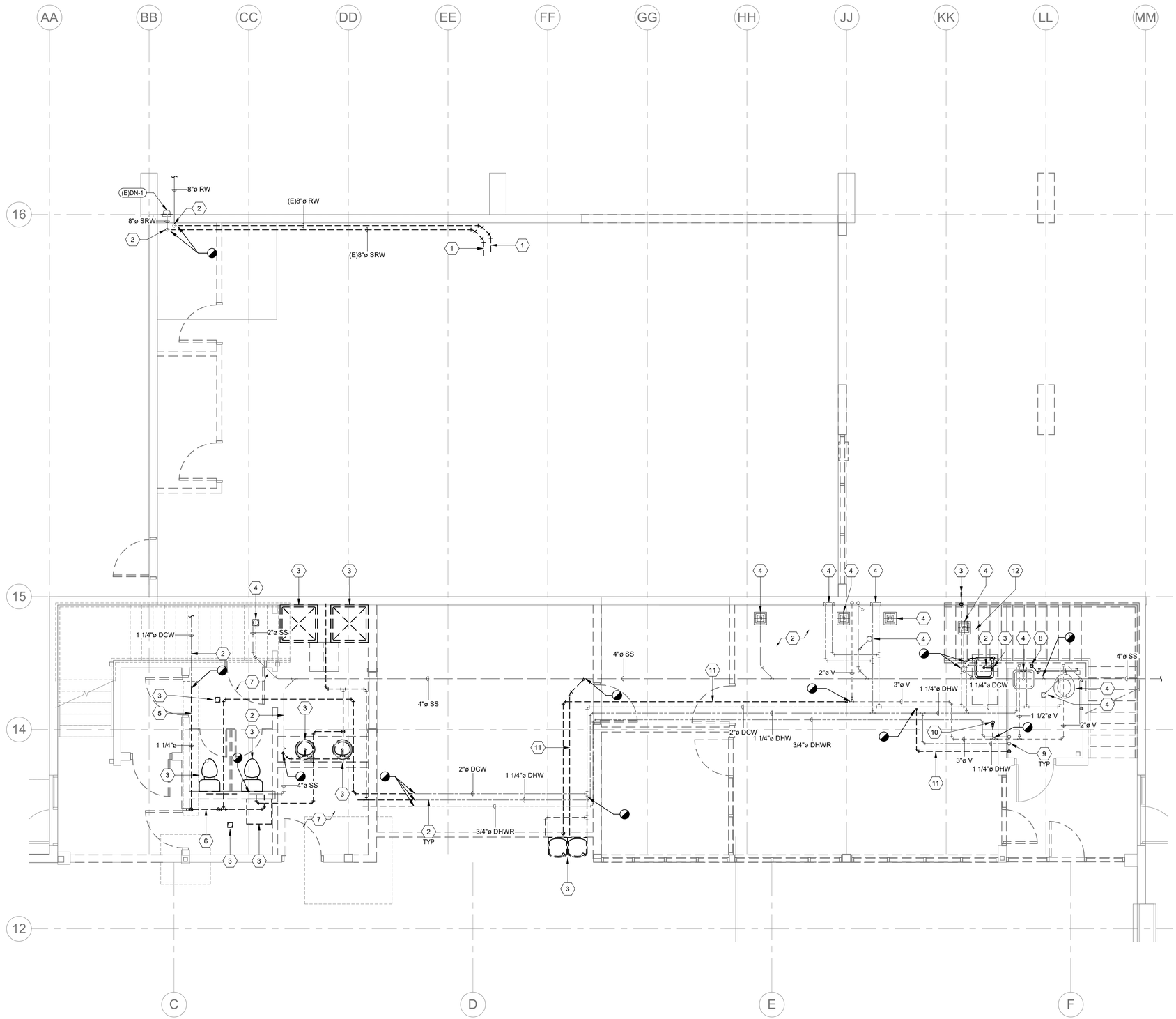

SHEET KEYNOTES

1 EXISTING ROOF DRAIN AND ASSOCIATED PIPING TO BE DEMOLISHED.

2 EXISTING PIPING TO REMAIN.

3 EXISTING PLUMBING FIXTURE AND ALL ASSOCIATED PIPING TO BE DEMOLISHED. DEMOLISH PIPING BACK TO MAIN.

4 EXISTING PLUMBING FIXTURE TO REMAIN.

5 EXISTING BELOW GRADE WATER LINE IN THIS APPROXIMATE LOCATION TO BE DEMOLISHED. COORDINATE NECESSARY SAW CUTTING, BACKFILL, AND NEW CONCRETE WITH GENERAL.

6 EXISTING WATER METER AND PRESSURE REGULATING VALVES IN THIS APPROXIMATE LOCATION TO BE DEMOLISHED.

7 ALL EXISTING DOMESTIC WATER, HOT WATER, AND HOT WATER RECIRCULATION PIPING IN THIS AREA TO BE DEMOLISHED. DEMOLISH BACK TO INDICATED LOCATION.

8 EXISTING 2" WASTE LINE RISING TO FLOOR ABOVE IN THIS APPROXIMATE LOCATION TO BE DEMOLISHED AND REPLACED WITH A 4" LINE. SEE PL104 FOR NEW CONSTRUCTION.

9 PIPE UP TO FLOOR ABOVE IN THIS APPROXIMATE LOCATION. SEE FLOOR ABOVE FOR CONTINUATION.

10 EXISTING VENT FROM 2ND FLOOR CEILING SPACE UP THROUGH ROOF TO REMAIN. VENT PIPE FROM 2ND FLOOR CEILING DOWN TO 1ST FLOOR CEILING SPACE TO BE DEMOLISHED. SEE SHEET PD101, PD102, AND PD103 FOR CONTINUATIONS.

11 EXISTING PIPING TO BE DEMOLISHED.

12 EXISTING ICE MACHINE IN THIS APPROXIMATE LOCATION AND ASSOCIATED COMPONENTS TO REMAIN.

1 LEVEL 1 PLUMBING DEMOLITION PLAN
1/4" = 1'-0"

0' 2' 4' 8' 12'
SCALE : 1/4" = 1'-0"

ARCHITECT 1877
ajc architects
703 east 1700 south
salt lake city, utah 84105
ph: 801.466.8818
fx: 801.466.4411
www.ajcarchitects.com

CONSULTANT
SPECTRUM ENGINEERS
324 S. State St., Suite 400
Salt Lake City, UT 84111
800-678-7077
801-328-5151
fax: 801-328-5155
www.spectrum-engineers.com

OWNER INFORMATION

PROJECT DESCRIPTION

DUMKE GYMNASTICS TRAINING CENTER

1825 E. SOUTH CAMPUS DRIVE
SALT LAKE CITY, UT 84112

AHJ STAMP

PROFESSIONAL ENGINEER
10-06-21
RYAN BOOGAARD
NO. 8677128
STATE OF UTAH

SHEET NAME:
LEVEL 1 PLUMBING DEMOLITION PLAN

REVISIONS

MARK	DATE	DESCRIPTION

ISSUE DATA

ISSUE DATE:	10.01.21
ISSUE TYPE:	CD
DRAWN BY:	CLD
CHECKED BY:	RHB
CLIENT PROJECT#:	

SHEET NUMBER:
PD101

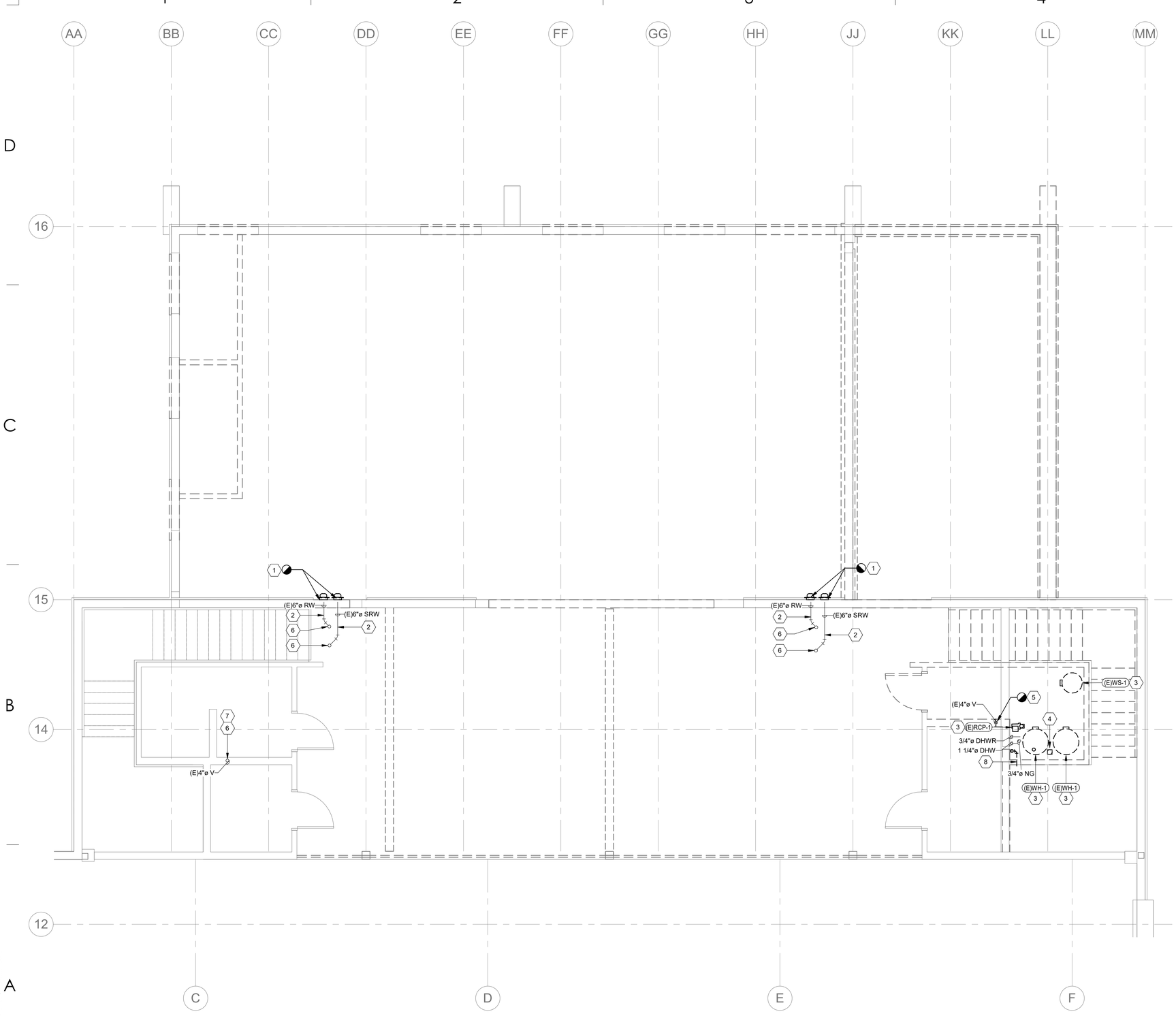

1 LEVEL 2 PLUMBING DEMOLITION PLAN
1/4" = 1'-0"

0' 2' 4' 8' 12'
SCALE : 1/4" = 1'-0"

SHEET KEYNOTES

1 EXISTING DOWNSPOUTS ABOVE ROOF TO BE DEMOLISHED.

2 EXISTING PIPING TO REMAIN.

3 EXISTING EQUIPMENT TO BE DEMOLISHED ALONG WITH ALL ASSOCIATED DUCTS, PIPES, AND ELECTRICAL CONNECTIONS.

4 EXISTING PLUMBING FIXTURE AND ALL ASSOCIATED PIPING TO BE DEMOLISHED. DEMOLISH PIPING BACK TO MAIN.

5 EXISTING VENT FROM 2ND FLOOR CEILING SPACE UP THROUGH ROOF TO REMAIN. VENT PIPE FROM 2ND FLOOR CEILING DOWN TO 1ST FLOOR CEILING SPACE TO BE DEMOLISHED. SEE SHEET PD101, PD102, AND PD103 FOR CONTINUATIONS.

6 PIPE UP TO FLOOR ABOVE IN THIS APPROXIMATE LOCATION. SEE FLOOR ABOVE FOR CONTINUATION.

7 PIPE DOWN TO FLOOR BELOW IN THIS APPROXIMATE LOCATION. SEE FLOOR BELOW FOR CONTINUATION.

8 EXISTING PIPING TO BE DEMOLISHED.

ARCHITECT 1877

ajc architects

703 east 1700 south
salt lake city, utah 84105
ph: 801.466.8818
fx: 801.466.4411
www.ajcarchitects.com

CONSULTANT

SPECTRUM ENGINEERS
324 S. State St., Suite 400
Salt Lake City, UT 84111
800-678-7077
801-328-5151
fax: 801-328-5155
www.spectrum-engineers.com

OWNER INFORMATION

PROJECT DESCRIPTION

DUMKE GYMNASTICS TRAINING CENTER

1825 E. SOUTH CAMPUS DRIVE
SALT LAKE CITY, UT 84112

AHJ STAMP

PROFESSIONAL ENGINEER
10-06-21
RYAN BOOGAARD
NO. 8677128
STATE OF UTAH

SHEET NAME:

LEVEL 2 PLUMBING DEMOLITION PLAN

REVISIONS

MARK	DATE	DESCRIPTION

ISSUE DATA

ISSUE DATE: 10.01.21
ISSUE TYPE: CD
DRAWN BY: CLD
CHECKED BY: RHB
CLIENT PROJECT#:

SHEET NUMBER:

PD102

10/6/2021 2:55:59 PM C:\Users\cld\Documents\20191093 MECH Central_cldUPA79.rvt

ALL IDEAS, DESIGNS, ARRANGEMENTS AND PLANS INDICATED OR REPRESENTED BY THIS DRAWING ARE OWNED BY AND THE PROPERTY OF AJC ARCHITECTS PC AND WERE CREATED, EVOLVED, AND DEVELOPED FOR USE ON AND IN CONNECTION WITH THE SPECIFIED PROJECT. NONE OF THE IDEAS, DESIGNS, ARRANGEMENTS OR PLANS SHALL BE USED BY OR DISCLOSED TO ANY PERSON, FIRM, OR CORPORATION FOR ANY PURPOSE WHATSOEVER WITHOUT WRITTEN CONSENT OF AJC ARCHITECTS PC. WRITTEN DIMENSIONS ON THESE DRAWINGS SHALL HAVE PRECEDENCE OVER SCALE DIMENSIONS. CONTRACTORS SHALL VERIFY AND BE RESPONSIBLE FOR ALL DIMENSIONS AND CONDITIONS ON THE JOB AND THIS OFFICE MUST BE NOTIFIED OF ANY VARIATION FROM THE DIMENSIONS AND CONDITIONS SHOWN BY THESE DRAWINGS. WARNING: REPRODUCTION HEREOF IS A CRIMINAL OFFENSE UNDER 18 U.S.C. SEC. 506. UNAUTHORIZED DISCLOSURE MAY CONSTITUTE TRADE SECRET MISAPPROPRIATION IN VIOLATION OF I.C.24-2-311 ET. SEQ. AND OTHER LAWS.

ALL IDEAS, DESIGNS, ARRANGEMENTS AND PLANS INDICATED OR REPRESENTED BY THIS DRAWING ARE OWNED BY AND THE PROPERTY OF AJC ARCHITECTS PC AND WERE CREATED, EVOLVED, AND DEVELOPED FOR USE ON AND IN CONNECTION WITH THE SPECIFIED PROJECT. NONE OF THE IDEAS, DESIGNS, ARRANGEMENTS OR PLANS SHALL BE USED BY OR DISCLOSED TO ANY PERSON, FIRM, OR CORPORATION FOR ANY PURPOSE WHATSOEVER WITHOUT WRITTEN CONSENT OF AJC ARCHITECTS PC.
WRITTEN DIMENSIONS ON THESE DRAWINGS SHALL HAVE PRECEDENCE OVER SCALE DIMENSIONS. CONTRACTORS SHALL VERIFY AND BE RESPONSIBLE FOR ALL DIMENSIONS AND CONDITIONS ON THE JOB AND THIS OFFICE MUST BE NOTIFIED OF ANY VARIATION FROM THE DIMENSIONS AND CONDITIONS SHOWN BY THESE DRAWINGS. WARNING: REPRODUCTION HEREOF IS A CRIMINAL OFFENSE UNDER 18 U.S.C. SEC. 506. UNAUTHORIZED DISCLOSURE MAY CONSTITUTE TRADE SECRET
MISAPPROPRIATION IN VIOLATION OF 17 U.S.C. § 1 ET. SEQ. AND OTHER LAWS.

10/6/2021 2:56:00 PM C:\Users\cld\Documents\20191093 MECH Central_cldUPA79.rvt

SHEET KEYNOTES

1 EXISTING EQUIPMENT TO BE DEMOLISHED ALONG WITH ALL ASSOCIATED DUCTS, PIPES, AND ELECTRICAL CONNECTIONS.

2 EXISTING PIPING TO REMAIN.

3 EXISTING PLUMBING FIXTURE AND ALL ASSOCIATED PIPING TO BE DEMOLISHED. DEMOLISH PIPING BACK TO MAIN.

4 EXISTING PLUMBING FIXTURE TO REMAIN.

5 PIPE DOWN TO FLOOR BELOW IN THIS APPROXIMATE LOCATION. SEE FLOOR BELOW FOR CONTINUATION.

6 EXISTING PIPING TO BE DEMOLISHED.

7 EXISTING GAS LINE TO GAS METER. EXISTING GAS METER TO BE DEMOLISHED AND REPLACED. SEE SHEET PL100 FOR MORE INFORMATION.

1 ROOF PLUMBING DEMOLITION PLAN
1/4" = 1'-0"

SCALE : 1/4" = 1'-0"

ARCHITECT 1877
ajc architects
703 east 1700 south
salt lake city, utah 84105
ph: 801.466.8818
fx: 801.466.4411
www.ajcarchitects.com

CONSULTANT
SPECTRUM ENGINEERS
324 S. State St., Suite 400
Salt Lake City, UT 84111
800-678-7077
801-328-5151
fax: 801-328-5155
www.spectrum-engineers.com

OWNER INFORMATION

PROJECT DESCRIPTION

DUMKE GYMNASTICS TRAINING CENTER

1825 E. SOUTH CAMPUS DRIVE
SALT LAKE CITY, UT 84112

AHJ STAMP

PROFESSIONAL ENGINEER 10-06-21 RYAN BOOGAARD NO. 8677128 STATE OF UTAH

SHEET NAME:
ROOF PLUMBING DEMOLITION PLAN

REVISIONS

MARK	DATE	DESCRIPTION

ISSUE DATA

ISSUE DATE:	10.01.21
ISSUE TYPE:	CD
DRAWN BY:	CLD
CHECKED BY:	RHB
CLIENT PROJECT#:	

SHEET NUMBER:

PD103

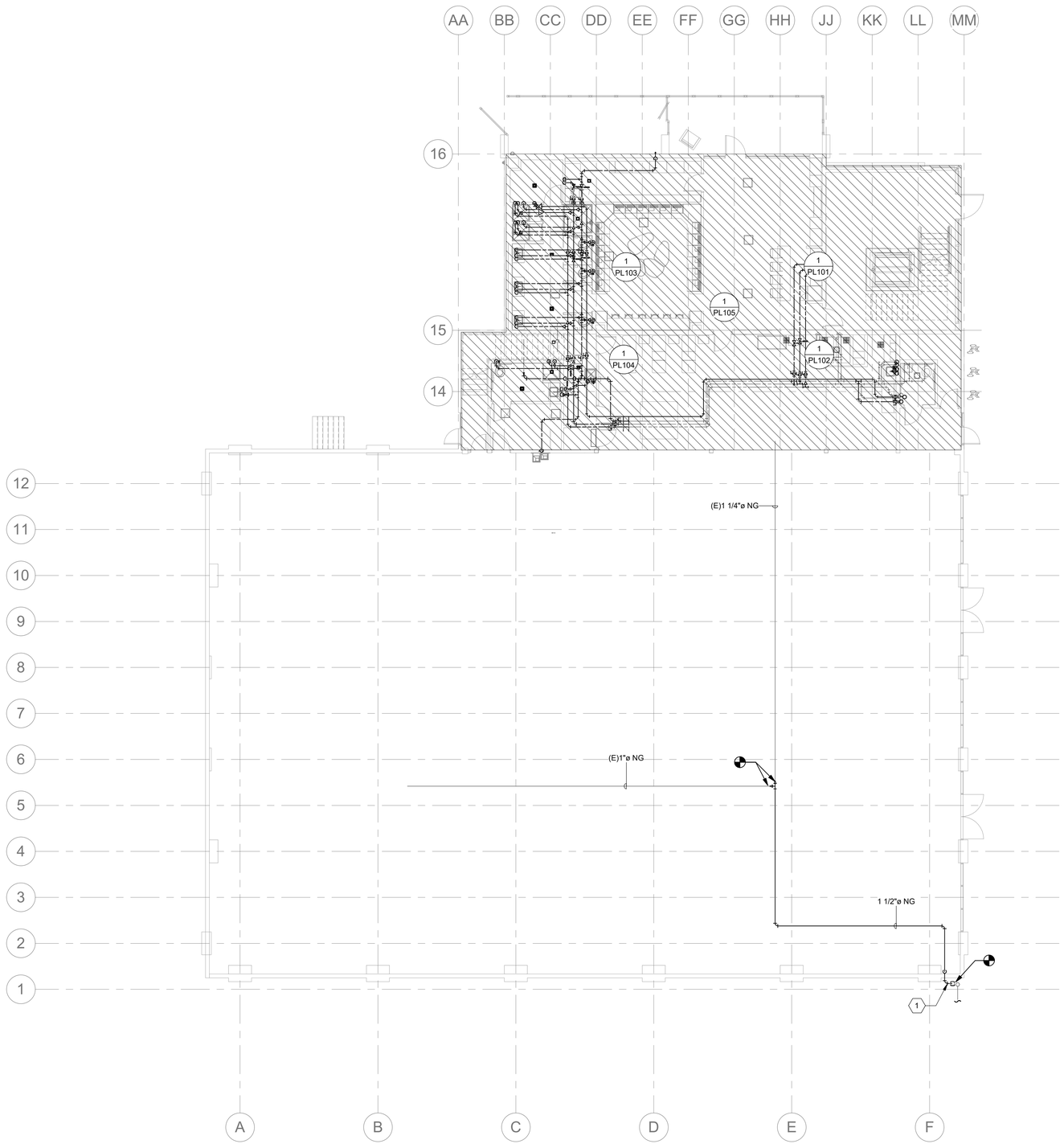

1 **OVERALL PLUMBING PLAN**
1" = 10'-0"

SHEET KEYNOTES

1 NEW GAS METER INFORMATION: LONGEST LENGTH 250FT - PRESSURE 2LB - 1950 MBH CAPACITY. SEE GAS METER DETAIL.

ARCHITECT 1877

ajc architects

703 east 1700 south
salt lake city, utah 84105
ph: 801.466.8818
fx: 801.466.4411
www.ajcarchitects.com

CONSULTANT

SPECTRUM ENGINEERS
324 S. State St., Suite 400
Salt Lake City, UT 84111
800-678-7077
801-328-5151
fax: 801-328-5155
www.spectrum-engineers.com

OWNER INFORMATION

PROJECT DESCRIPTION

DUMKE GYMNASTICS TRAINING CENTER
1825 E. SOUTH CAMPUS DRIVE
SALT LAKE CITY, UT 84112

AHJ STAMP

PROFESSIONAL ENGINEER
10-06-21
RYAN BOOGAARD
NO. 8677128
STATE OF UTAH

SHEET NAME:
OVERALL PLUMBING PLAN

REVISIONS

MARK	DATE	DESCRIPTION

ISSUE DATA

ISSUE DATE: 10.01.21
ISSUE TYPE: CD
DRAWN BY: CLD
CHECKED BY: RHB
CLIENT PROJECT#:

SHEET NUMBER:

PL100

10/6/2021 2:56:10 PM C:\Users\cld\Documents\20191093 MECH Central_cldUPA79.rvt

ALL IDEAS, DESIGNS, ARRANGEMENTS AND PLANS INDICATED OR REPRESENTED BY THIS DRAWING ARE OWNED BY AND THE PROPERTY OF AJC ARCHITECTS PC AND WERE CREATED, EVOLVED, AND DEVELOPED FOR USE ON AND IN CONNECTION WITH THE SPECIFIED PROJECT. NONE OF THE IDEAS, DESIGNS, ARRANGEMENTS OR PLANS SHALL BE USED BY OR DISCLOSED TO ANY PERSON, FIRM, OR CORPORATION FOR ANY PURPOSE WHATSOEVER WITHOUT WRITTEN CONSENT OF AJC ARCHITECTS PC. WRITTEN DIMENSIONS ON THESE DRAWINGS SHALL HAVE PRECEDENCE OVER SCALE DIMENSIONS. CONTRACTORS SHALL VERIFY AND BE RESPONSIBLE FOR ALL DIMENSIONS AND CONDITIONS ON THE JOB AND THIS OFFICE MUST BE NOTIFIED OF ANY VARIATION FROM THE DIMENSIONS AND CONDITIONS SHOWN BY THESE DRAWINGS. WARNING: REPRODUCTION HEREOF IS A CRIMINAL OFFENSE UNDER 18 U.S.C. SEC. 506. UNAUTHORIZED DISCLOSURE MAY CONSTITUTE TRADE SECRET MISAPPROPRIATION IN VIOLATION OF UC 24-2-311 ET. SEQ. AND OTHER LAWS.

10/6/2021 2:56:14 PM C:\Users\cld\Documents\20191093 MECH Central_cldUPA79.rvt

ALL IDEAS, DESIGNS, ARRANGEMENTS AND PLANS INDICATED OR REPRESENTED BY THIS DRAWING ARE OWNED BY AND THE PROPERTY OF AJC ARCHITECTS PC AND WERE CREATED, EVOLVED, AND DEVELOPED FOR USE ON AND IN CONNECTION WITH THE SPECIFIED PROJECT. NONE OF THE IDEAS, DESIGNS, ARRANGEMENTS OR PLANS SHALL BE USED BY OR DISCLOSED TO ANY PERSON, FIRM OR CORPORATION FOR ANY PURPOSE WHATSOEVER WITHOUT WRITTEN CONSENT OF AJC ARCHITECTS PC. WRITTEN DIMENSIONS ON THESE DRAWINGS SHALL HAVE PRECEDENCE OVER SCALE DIMENSIONS. CONTRACTORS SHALL VERIFY AND BE RESPONSIBLE FOR ALL DIMENSIONS AND CONDITIONS ON THE JOB AND THIS OFFICE MUST BE NOTIFIED OF ANY VARIATION FROM THE DIMENSIONS AND CONDITIONS SHOWN BY THESE DRAWINGS. WARNING: REPRODUCTION HEREOF IS A CRIMINAL OFFENSE UNDER 18 U.S.C. SEC. 506. UNAUTHORIZED DISCLOSURE MAY CONSTITUTE TRADE SECRET MISAPPROPRIATION IN VIOLATION OF 17 C.F.R. 240.10b-5 AND OTHER LAWS.

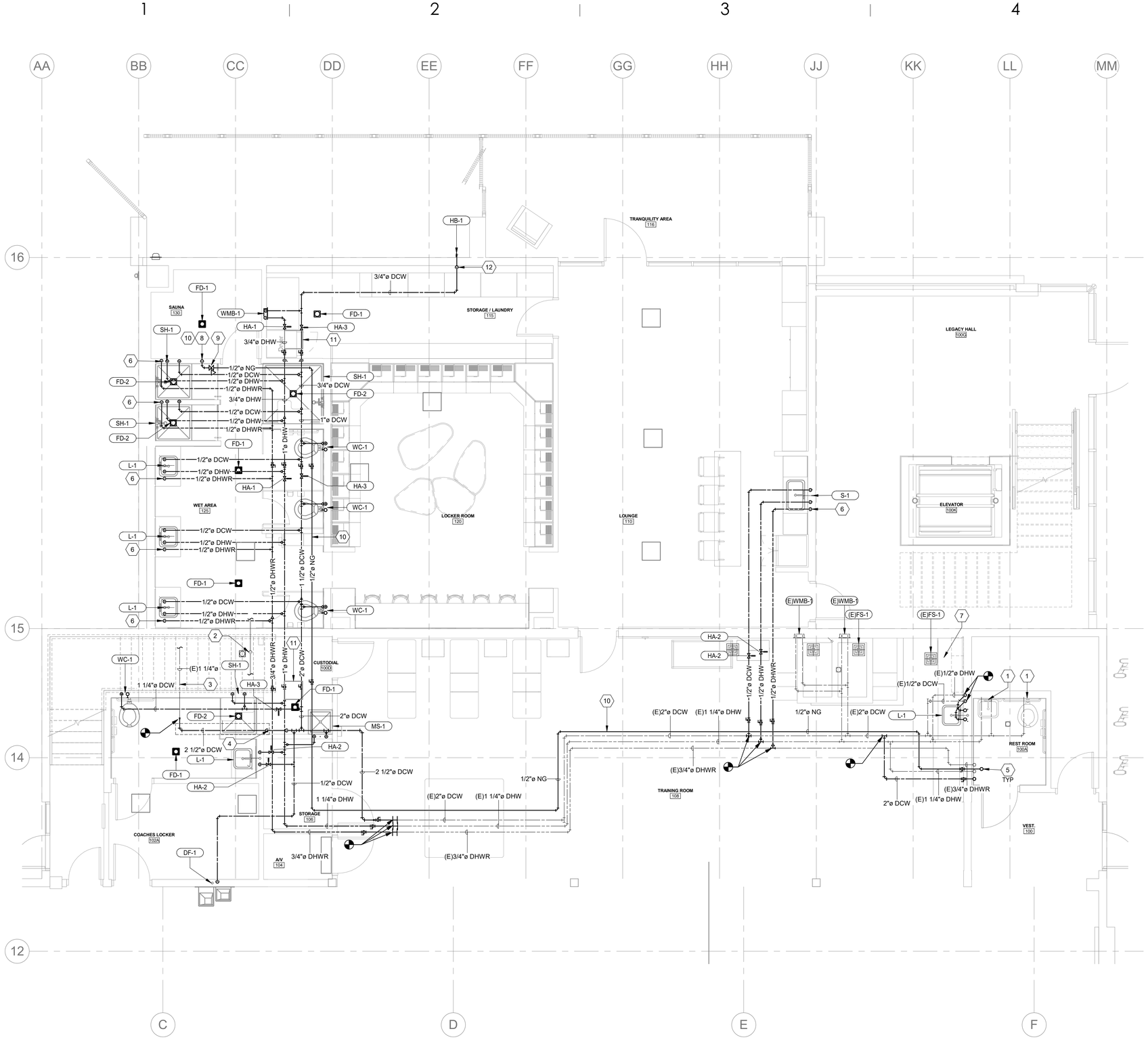

1 LEVEL 1 PLUMBING PLAN - WATER

1/4" = 1'-0"

0' 2' 4' 8' 12'

SCALE : 1/4" = 1'-0"

SHEET KEYNOTES

1 EXISTING PLUMBING FIXTURE TO REMAIN.

2 EXISTING FIRE RISER IN THIS APPROXIMATE LOCATION. SEE FIRE PROTECTION PLANS FOR CONTINUATION.

3 EXISTING BELOW GRADE WATER MAIN IN THIS APPROXIMATE LOCATION. FIELD VERIFY EXACT LOCATION BEFORE ORDERING / FABRICATING. COORDINATE NECESSARY SAW CUTTING, BACKFILL, AND NEW CONCRETE FOR NEW BELOW GRADE PIPING WITH GENERAL.

4 PROVIDE WATER METER AND PRESSURE REDUCING VALVES IN THIS APPROXIMATE LOCATION. SEE PRV STATION DETAIL.

5 PIPE UP TO FLOOR ABOVE IN THIS APPROXIMATE LOCATION. SEE FLOOR ABOVE FOR CONTINUATION.

6 PROVIDE A CALEFFI 116 THERMOSTATIC BALANCING VALVE SET TO 110°F IN THIS APPROXIMATE LOCATION. VALVE TO BE LOCATED IN AN ACCESSIBLE LOCATION.

7 EXISTING ICE MACHINE IN THIS APPROXIMATE LOCATION AND ASSOCIATED COMPONENTS TO REMAIN.

8 GAS LINE TO SAUNA HEATER IN THIS APPROXIMATE LOCATION. PROVIDE WITH SHUT OFF VALVE. COORDINATE EXACT LOCATION AND REQUIREMENTS WITH SAUNA SHOP DRAWINGS.

9 PROVIDE A 2LB TO 4OZ VENTLESS PRESSURE REGULATOR BY PIETRO FIORENTINI OR APPROVED EQUAL IN THIS APPROXIMATE LOCATION.

10 SAUNA COMPONENTS TO BE BID AS ADD ALTERNATE 4.

11 PROVIDE 18" X 18" ACCESS PANEL IN THIS APPROXIMATE LOCATION.

12 WATER LINE DROP INSIDE ROOM TO ALLOW ROOM FOR FREEZEPROOF HOSEBIBB IN THIS APPROXIMATE LOCATION. COORDINATE EXACT LOCATION WITH ARCHITECT.

ARCHITECT 1877

ajc architects

703 east 1700 south
salt lake city, utah 84105
ph: 801.466.8818
fx: 801.466.4411
www.ajcarchitects.com

CONSULTANT

SPECTRUM ENGINEERS
324 S. State St., Suite 400
Salt Lake City, UT 84111
800-678-7077
801-328-5151
fax: 801-328-5155
www.spectrum-engineers.com

OWNER INFORMATION

PROJECT DESCRIPTION

DUMKE GYMNASTICS TRAINING CENTER

1825 E. SOUTH CAMPUS DRIVE
SALT LAKE CITY, UT 84112

AHJ STAMP

PROFESSIONAL ENGINEER
10-06-21
RYAN BOOGAARD
NO. 8677128
STATE OF UTAH

SHEET NAME:
LEVEL 1 PLUMBING PLAN - WATER

REVISIONS

MARK	DATE	DESCRIPTION

ISSUE DATA

ISSUE DATE:	10.01.21
ISSUE TYPE:	CD
DRAWN BY:	CLD
CHECKED BY:	RHB
CLIENT PROJECT#:	

SHEET NUMBER:

PL101

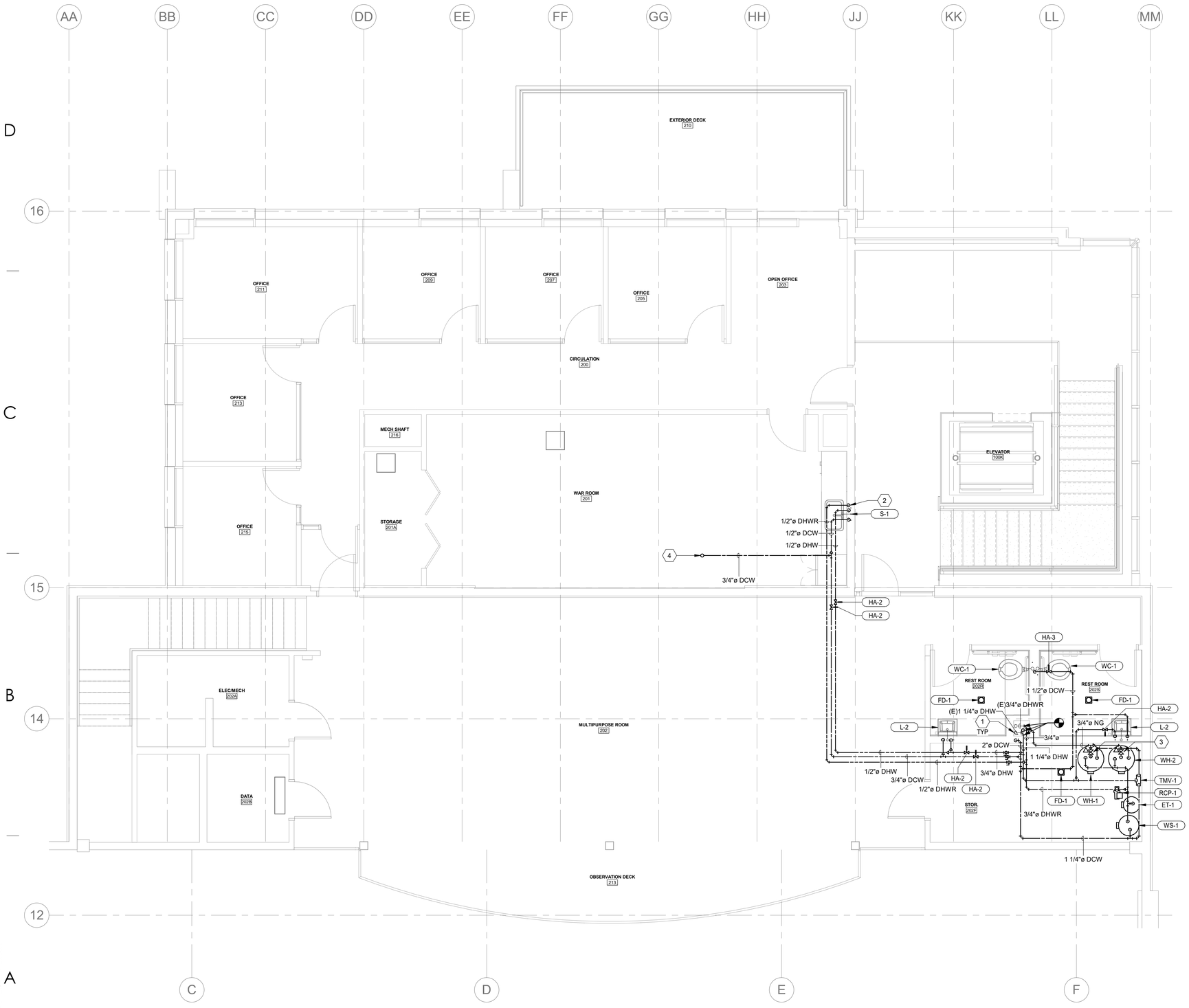

1 LEVEL 2 PLUMBING PLAN - WATER

1/4" = 1'-0"

0' 2' 4' 8' 12'

SCALE : 1/4" = 1'-0"

SHEET KEYNOTES

1. PIPE DOWN TO FLOOR BELOW IN THIS APPROXIMATE LOCATION. SEE FLOOR BELOW FOR CONTINUATION.
2. PROVIDE A CALEFFI 116 THERMOSTATIC BALANCING VALVE SET TO 110°F IN THIS APPROXIMATE LOCATION. VALVE TO BE LOCATED IN AN ACCESSIBLE LOCATION.
3. PROVIDE A 2LB TO 4OZ VENTLESS PRESSURE REGULATOR BY PIETRO FIORENTINI OR APPROVED EQUAL IN THIS APPROXIMATE LOCATION.
4. PIPE UP TO FLOOR ABOVE IN THIS APPROXIMATE LOCATION. SEE FLOOR ABOVE FOR CONTINUATION.

ARCHITECT 1877

ajc architects

703 east 1700 south
salt lake city, utah 84105
ph: 801.466.8818
fx: 801.466.4411
www.ajcarchitects.com

CONSULTANT

SPECTRUM ENGINEERS
324 S. State St., Suite 400
Salt Lake City, UT 84111
800-678-7077
801-328-5151
fax: 801-328-5155
www.spectrum-engineers.com

OWNER INFORMATION

PROJECT DESCRIPTION

DUMKE GYMNASTICS TRAINING CENTER

1825 E. SOUTH CAMPUS DRIVE
SALT LAKE CITY, UT 84112

AHJ STAMP

PROFESSIONAL ENGINEER
10-06-21
RYAN BOOGAARD
NO. 8677128
STATE OF UTAH

SHEET NAME:

LEVEL 2 PLUMBING PLAN - WATER

REVISIONS

MARK	DATE	DESCRIPTION

ISSUE DATA

ISSUE DATE: 10.01.21
ISSUE TYPE: CD
DRAWN BY: CLD
CHECKED BY: RHB
CLIENT PROJECT#:

SHEET NUMBER:

PL102

10/6/2021 2:56:17 PM C:\Users\cld\Documents\20191093 MECH Central_cldUPA79.rvt

ALL IDEAS, DESIGNS, ARRANGEMENTS AND PLANS INDICATED OR REPRESENTED BY THIS DRAWING ARE OWNED BY AND THE PROPERTY OF AJC ARCHITECTS PC AND WERE CREATED, EVOLVED AND DEVELOPED FOR USE ON AND IN CONNECTION WITH THE SPECIFIED PROJECT. NONE OF THE IDEAS, DESIGNS, ARRANGEMENTS OR PLANS SHALL BE USED BY OR DISCLOSED TO ANY PERSON, FIRM, OR CORPORATION FOR ANY PURPOSE WHATSOEVER WITHOUT WRITTEN CONSENT OF AJC ARCHITECTS PC. WRITTEN DIMENSIONS ON THESE DRAWINGS SHALL HAVE PRECEDENCE OVER SCALE DIMENSIONS. CONTRACTORS SHALL VERIFY AND BE RESPONSIBLE FOR ALL DIMENSIONS AND CONDITIONS ON THE JOB AND THIS OFFICE MUST BE NOTIFIED OF ANY VARIATION FROM THE DIMENSIONS AND CONDITIONS SHOWN BY THESE DRAWINGS. WARNING: REPRODUCTION HEREOF IS A CRIMINAL OFFENSE UNDER 18 U.S.C. SEC. 506. UNAUTHORIZED DISCLOSURE MAY CONSTITUTE TRADE SECRET

ALL IDEAS, DESIGNS, ARRANGEMENTS AND PLANS INDICATED OR REPRESENTED BY THIS DRAWING ARE OWNED BY AND THE PROPERTY OF AJC ARCHITECTS PC AND WERE CREATED, EVOLVED, AND DISCLOSED FOR USE ON AND IN CONNECTION WITH THE SPECIFIED PROJECT. NONE OF THE IDEAS, DESIGNS, ARRANGEMENTS OR PLANS SHALL BE USED BY OR DISCLOSED TO ANY PERSON, FIRM, OR CORPORATION FOR ANY PURPOSE WHATSOEVER WITHOUT WRITTEN CONSENT OF AJC ARCHITECTS PC. WRITTEN DIMENSIONS ON THESE DRAWINGS SHALL HAVE PRECEDENCE OVER SCALE DIMENSIONS. CONTRACTORS SHALL VERIFY AND BE RESPONSIBLE FOR ALL DIMENSIONS AND CONDITIONS ON THE JOB AND THIS OFFICE MUST BE NOTIFIED OF ANY VARIATION FROM THE DIMENSIONS AND CONDITIONS SHOWN BY THESE DRAWINGS. WARNING: REPRODUCTION HEREOF IS A CRIMINAL OFFENCE UNDER 18 U.S.C. SEC. 506. UNAUTHORIZED DISCLOSURE MAY CONSTITUTE TRADE SECRET MISAPPROPRIATION IN VIOLATION OF 17 C.F.R. 240.10b-5 AND OTHER LAWS.

10/6/2021 2:56:22 PM C:\Users\cld\Documents\20191093 MECH Central_cldUPA79.rvt

SHEET KEYNOTES

1 EXISTING PLUMBING FIXTURE TO REMAIN.

2 EXISTING FIRE RISER IN THIS APPROXIMATE LOCATION. SEE FIRE PROTECTION PLANS FOR CONTINUATION.

3 CONDENSATE DRAIN TO TERMINATE IN THIS APPROXIMATE LOCATION. PROVIDE WITH FUNNEL DRAIN. SEE FUNNEL DRAIN DETAIL.

4 PIPE UP TO FLOOR ABOVE IN THIS APPROXIMATE LOCATION. SEE FLOOR ABOVE FOR CONTINUATION.

1 **LEVEL 1 PLUMBING PLAN - DWV**
1/4" = 1'-0"

SCALE : 1/4" = 1'-0"

ARCHITECT 1877
ajc architects
703 east 1700 south
salt lake city, utah 84105
ph: 801.466.8818
fx: 801.466.4411
www.ajcarchitects.com

CONSULTANT
SPECTRUM ENGINEERS
324 S. State St., Suite 400
Salt Lake City, UT 84111
800-678-7077
801-328-5151
fax: 801-328-5155
www.spectrum-engineers.com

OWNER INFORMATION

PROJECT DESCRIPTION

DUMKE GYMNASTICS TRAINING CENTER

1825 E. SOUTH CAMPUS DRIVE
SALT LAKE CITY, UT 84112

AHJ STAMP

PROFESSIONAL ENGINEER 10-06-21 RYAN BOOGAARD NO. 8677128 STATE OF UTAH

SHEET NAME:
LEVEL 1 PLUMBING PLAN - DWV

REVISIONS

MARK	DATE	DESCRIPTION

ISSUE DATA

ISSUE DATE:	10.01.21
ISSUE TYPE:	CD
DRAWN BY:	CLD
CHECKED BY:	RHB
CLIENT PROJECT#:	

SHEET NUMBER:
PL103

ALL IDEAS, DESIGNS, ARRANGEMENTS AND PLANS INDICATED OR REPRESENTED BY THIS DRAWING ARE OWNED BY AND THE PROPERTY OF AJC ARCHITECTS PC AND WERE CREATED, EVOLVED, AND DEVELOPED FOR USE ON AND IN CONNECTION WITH THE SPECIFIED PROJECT. NONE OF THE IDEAS, DESIGNS, ARRANGEMENTS OR PLANS SHALL BE USED BY OR DISCLOSED TO ANY PERSON, FIRM, OR CORPORATION FOR ANY PURPOSE WHATSOEVER WITHOUT WRITTEN CONSENT OF AJC ARCHITECTS PC. WRITTEN DIMENSIONS ON THESE DRAWINGS SHALL HAVE PRECEDENCE OVER SCALE DIMENSIONS. CONTRACTORS SHALL VERIFY AND BE RESPONSIBLE FOR ALL DIMENSIONS AND CONDITIONS ON THE JOB AND THIS OFFICE MUST BE NOTIFIED OF ANY VARIATION FROM THE DIMENSIONS AND CONDITIONS SHOWN BY THESE DRAWINGS. WARNING: REPRODUCTION HEREOF IS A CRIMINAL OFFENSE UNDER 18 U.S.C. SEC. 506. UNAUTHORIZED DISCLOSURE MAY CONSTITUTE TRADE SECRET MISAPPROPRIATION IN VIOLATION OF 7 C.J.S.2-3-1 ET. SEQ. AND OTHER LAWS.

10/6/2021 2:56:25 PM C:\Users\cldt\Documents\20191093 MECH Central_cldUPA79.rvt

SHEET KEYNOTES

1 PIPE DOWN TO FLOOR BELOW IN THIS APPROXIMATE LOCATION. SEE FLOOR BELOW FOR CONTINUATION.

2 PIPE FROM SECOND FLOOR CEILING SPACE UP THROUGH ROOF IN THIS APPROXIMATE LOCATION. SEE ROOF PLAN FOR CONTINUATION.

3 PIPE UP TO FLOOR ABOVE IN THIS APPROXIMATE LOCATION. SEE FLOOR ABOVE FOR CONTINUATION.

4 CONDENSATE DRAIN TO TERMINATE IN THIS APPROXIMATE LOCATION. PROVIDE WITH FUNNEL DRAIN. SEE FUNNEL DRAIN DETAIL.

1 LEVEL 2 PLUMBING PLAN - DWV
1/4" = 1'-0"

SCALE : 1/4" = 1'-0"

ARCHITECT 1877
ajc architects
703 east 1700 south
salt lake city, utah 84105
ph: 801.466.8818
fx: 801.466.4411
www.ajcarchitects.com

CONSULTANT
SPECTRUM ENGINEERS
324 S. State St., Suite 400
Salt Lake City, UT 84111
800-678-7077
801-328-5151
fax: 801-328-5155
www.spectrum-engineers.com

OWNER INFORMATION

PROJECT DESCRIPTION

DUMKE GYMNASTICS TRAINING CENTER

1825 E. SOUTH CAMPUS DRIVE
SALT LAKE CITY, UT 84112

AHJ STAMP

PROFESSIONAL ENGINEER 10-06-21 RYAN BOGAARD NO. 8677128 STATE OF UTAH

SHEET NAME:
LEVEL 2 PLUMBING PLAN - DWV

REVISIONS

MARK	DATE	DESCRIPTION

ISSUE DATA

ISSUE DATE:	10.01.21
ISSUE TYPE:	CD
DRAWN BY:	CLD
CHECKED BY:	RHB
CLIENT PROJECT#:	

SHEET NUMBER:
PL104

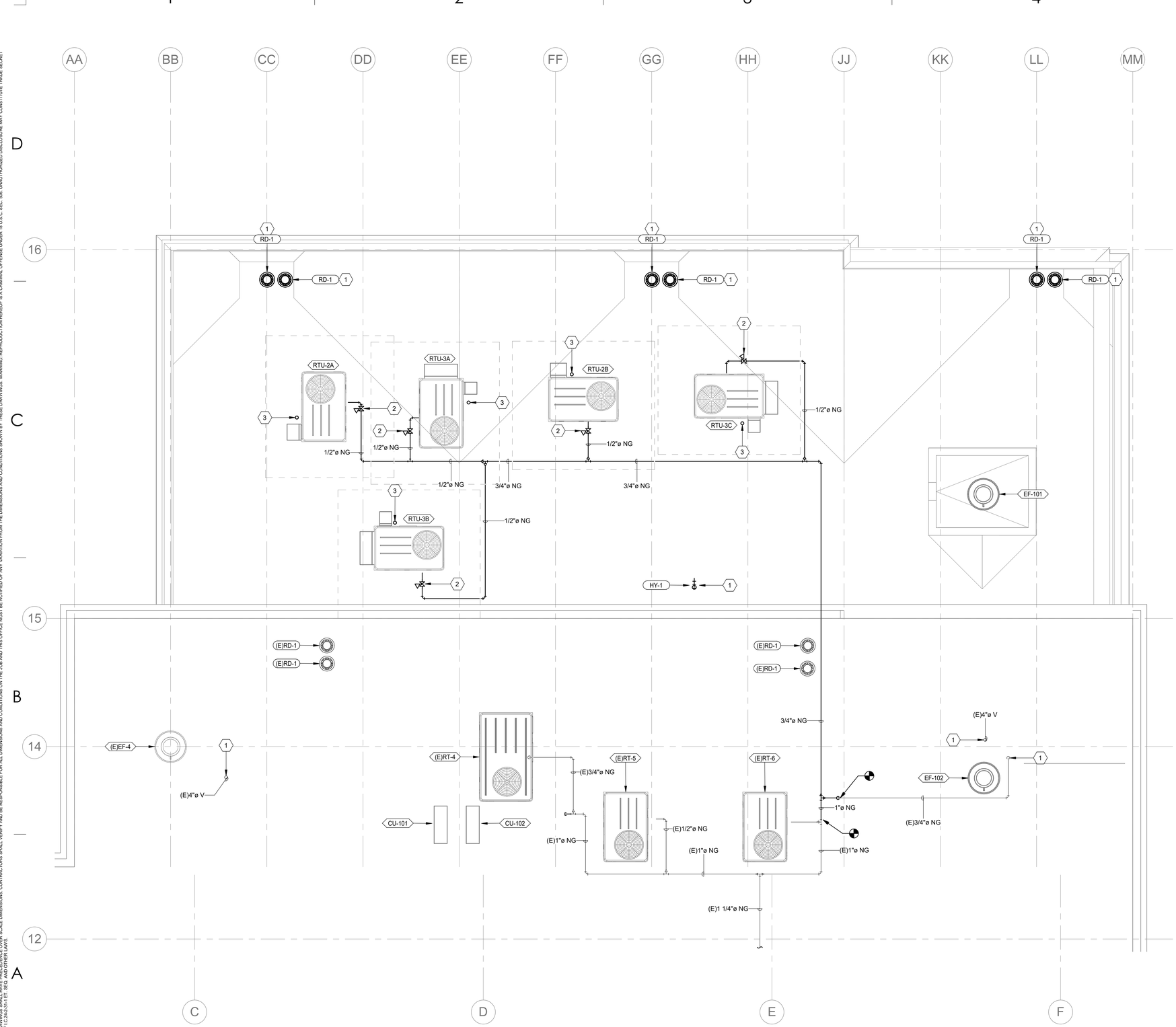

1 **ROOF PLUMBING PLAN**
1/4" = 1'-0"

0' 2' 4' 8' 12'
SCALE : 1/4" = 1'-0"

SHEET KEYNOTES

1 PIPE DOWN TO FLOOR BELOW IN THIS APPROXIMATE LOCATION. SEE FLOOR BELOW FOR CONTINUATION.

2 PROVIDE A 2LB TO 4OZ VENTLESS PRESSURE REGULATOR BY PIETRO FIORENTINI OR APPROVED EQUAL IN THIS APPROXIMATE LOCATION.

3 CONDENSATE DRAIN FROM ROOFTOP UNIT TO DROP DOWN THROUGH ROOF TO SECOND FLOOR IN THIS APPROXIMATE LOCATION. PROVIDE WITH P-TRAP AT UNIT AND WATERPROOF / WEATHERPROOF BOOT AT ROOF PENETRATION. INSTALL PER ALL MANUFACTURER RECOMMENDATIONS.

ARCHITECT 1877

ajc architects

703 east 1700 south
salt lake city, utah 84105
ph: 801.466.8818
fx: 801.466.4411
www.ajcarchitects.com

CONSULTANT

SPECTRUM ENGINEERS
324 S. State St., Suite 400
Salt Lake City, UT 84111
800-678-7077
801-328-5151
fax: 801-328-5155
www.spectrum-engineers.com

OWNER INFORMATION

PROJECT DESCRIPTION

DUMKE GYMNASTICS TRAINING CENTER

1825 E. SOUTH CAMPUS DRIVE
SALT LAKE CITY, UT 84112

AHJ STAMP

PROFESSIONAL ENGINEER
10-06-21
RYAN BOOGAARD
NO. 8677128
STATE OF UTAH

SHEET NAME:

ROOF PLUMBING PLAN

REVISIONS

MARK	DATE	DESCRIPTION

ISSUE DATA

ISSUE DATE: 10.01.21
ISSUE TYPE: CD
DRAWN BY: CLD
CHECKED BY: RHB
CLIENT PROJECT#:

SHEET NUMBER:

PL105

10/6/2021 2:56:27 PM C:\Users\cld\Documents\20191093 MECH Central_cldUPA79.rvt

ALL IDEAS, DESIGNS, ARRANGEMENTS AND PLANS INDICATED OR REPRESENTED BY THIS DRAWING ARE OWNED BY AND THE PROPERTY OF AJC ARCHITECTS PC AND WERE CREATED, EVOLVED, AND DEVELOPED FOR USE ON AND IN CONNECTION WITH THE SPECIFIED PROJECT. NONE OF THE IDEAS, DESIGNS, ARRANGEMENTS OR PLANS SHALL BE USED BY OR DISCLOSED TO ANY PERSON, FIRM, OR CORPORATION FOR ANY PURPOSE WHATSOEVER WITHOUT WRITTEN CONSENT OF AJC ARCHITECTS PC. WRITTEN DIMENSIONS ON THESE DRAWINGS SHALL HAVE PRECEDENCE OVER SCALE DIMENSIONS. CONTRACTORS SHALL VERIFY AND BE RESPONSIBLE FOR ALL DIMENSIONS AND CONDITIONS ON THE JOB AND THIS OFFICE MUST BE NOTIFIED OF ANY VARIATION FROM THE DIMENSIONS AND CONDITIONS SHOWN BY THESE DRAWINGS. WARNING: REPRODUCTION HEREOF IS A CRIMINAL OFFENSE UNDER 18 U.S.C. SEC. 506. UNAUTHORIZED DISCLOSURE MAY CONSTITUTE TRADE SECRET MISAPPROPRIATION IN VIOLATION OF 1C 24-2-311 ET. SEQ. AND OTHER LAWS.

10/3/2021 1:34:51 PM C:\Users\ibc\Desktop\Revit Local Files\2020\20191093 ELEC Central_IBC-Spectrum.rvt

ALL IDEAS, DESIGNS, ARRANGEMENTS AND PLANS INDICATED OR REPRESENTED BY THIS DRAWING ARE OWNED BY AND THE PROPERTY OF AJC ARCHITECTS PC AND WERE CREATED, EVOLVED, AND DEVELOPED FOR USE ON AND IN CONNECTION WITH THE SPECIFIED PROJECT. NONE OF THE IDEAS, DESIGNS, ARRANGEMENTS OR PLANS SHALL BE USED BY OR DISCLOSED TO ANY PERSON, FIRM, OR CORPORATION FOR ANY PURPOSE WHATSOEVER WITHOUT WRITTEN CONSENT OF AJC ARCHITECTS PC. WRITTEN DIMENSIONS ON THESE DRAWINGS SHALL HAVE PRECEDENCE OVER SCALE DIMENSIONS. CONTRACTORS SHALL VERIFY AND BE RESPONSIBLE FOR ALL DIMENSIONS AND CONDITIONS ON THE JOB AND THIS OFFICE MUST BE NOTIFIED OF ANY VARIATION FROM THE DIMENSIONS AND CONDITIONS SHOWN BY THESE DRAWINGS. WARNING: REPRODUCTION HEREOF IS A CRIMINAL OFFENSE UNDER 18 U.S.C. SEC. 506. UNAUTHORIZED DISCLOSURE MAY CONSTITUTE TRADE SECRET MISAPPROPRIATION IN VIOLATION OF I.C.24-2-31-1 ET. SEQ. AND OTHER LAWS.

System Responsibility Matrix

Version 4, 5/5/2020	Designed By	Furnished By	Installed By	Notes
Power				
Medium Voltage Equipment	NIC	NIC	NIC	
UPS	Owner	Owner	Owner	208V, 1 Phase, 30 Amp In and out.
Telecomm				
Raceways, Conduit/Cable Tray/J-Hooks	Design Team	Contractor	Contractor	Boxes, Raceways, Cabletray, ect.
Fiber Micro Duct	NIC	NIC	NIC	Existing
Backbone Airblown Fiber	NIC	NIC	NIC	Existing
Fiber Termination Shelves (FPP1, FPP2)	Design Team	Contractor	Contractor	
Copper Backbone Cabling	NIC	NIC	NIC	
Riser Patch Panels (RPP1)	Design Team	Contractor	Contractor	
Fuse Protection for Backbone Cabling	NIC	NIC	NIC	Existing
Cat 6 Horizontal Cable	Design Team	Contractor	Contractor	
Cat 6A Horizontal Cable	Design Team	Contractor	Contractor	
Patch Panels/Inserts SPP, WPP	Design Team	Contractor	Contractor	
Horizontal Wire Manager (1RU, 2RU)	Design Team	Contractor	Contractor	
Vertical Wire Manager	Design Team	Contractor	Contractor	
RJ45 Inserts, Faceplates, Surface Mount Boxes	Design Team	Contractor	Contractor	
Cat 6 and Cat 6A Patch Cords	Owner	Contractor	Contractor	Patch cord quantities and lengths to be indentified and coordinated by owner and Spectrum Engineers.
Building MDF/IDF Racks	Design Team	Owner	Contractor	
Building MDF/IDF Ladder Rack	Design Team	Owner	Contractor	
Active Network Electronics	Owner	Owner	Owner	Wireless AP's, L2/L3 network switches, etc
Rack PDUs	Design Team	Contractor	Contractor	
Emergency Responder DAS Testing	NIC	NIC	NIC	
Emergency Responder DAS System	NIC	NIC	NIC	
Cell Phone Booster System and/or DAS	NIC	NIC	NIC	
Security & Misc.				
Raceways	Design Team	Contractor	Contractor	
CCTV Security Camera System	Owner	Owner	Owner	Provide locations and roughin requirments
Access Controls System	Design Team	Contractor	Contractor	Software House C*Cure, HID Card Readers
Intrusion Detection System	NIC	NIC	NIC	Provide locations and roughin needs
Wireless Clock System	NIC	NIC	NIC	
A/V				
Raceways	Design Team	Contractor	Contractor	
Audio Systems	Owner	Owner	Owner	
Video Systems	Owner	Owner	Owner	
IVC Systems	NIC	NIC	NIC	
Digital Signage	NIC	NIC	NIC	
Projector Mounts	Owner	Owner	Owner	
Projector Screens	Owner	Owner	Owner	
TV Distribution System	NIC	NIC	NIC	
Intercom/Paging System	Owner	Owner	Owner	

DEFINITIONS

NOTE: ALL DEFINITIONS MAY NOT BE USED.

INDICATED: THE TERM "INDICATED" REFERS TO GRAPHIC REPRESENTATIONS, NOTES, OR SCHEDULES ON THE DRAWINGS, OTHER PARAGRAPHS OR SCHEDULES IN THE SPECIFICATIONS, AND SIMILAR REQUIREMENTS IN THE CONTRACT DOCUMENTS. WHERE TERMS SUCH AS "SHOWN", "NOTED", "SCHEDULED", AND "SPECIFIED" ARE USED, IT IS TO HELP THE READER LOCATE THE REFERENCE, NO LIMITATION ON LOCATION IS INTENDED.

DIRECTED: TERMS SUCH AS "DIRECTED", "REQUESTED", AUTHORIZED", "SELECTED", "APPROVED", "REQUIRED", AND "PERMITTED" MEAN "DIRECTED BY THE ENGINEER", "REQUESTED BY THE ENGINEER", AND SIMILAR PHRASES.

APPROVED: THE TERM "APPROVED", WHERE USED IN CONJUNCTION WITH THE ENGINEER'S ACTION ON THE CONTRACTOR'S SUBMITTALS, APPLICATIONS, AND REQUESTS, IS LIMITED TO THE ENGINEER'S DUTIES AND RESPONSIBILITIES AS STATED IN GENERAL AND SUPPLEMENTARY CONDITIONS.

FURNISH: THE TERM "FURNISH" IS USED TO MEAN "SUPPLY AND DELIVER TO THE PROJECT SITE, READY FOR UNLOADING, UNPACKING, ASSEMBLY, INSTALLATION, AND SIMILAR OPERATIONS."

INSTALL: THE TERM "INSTALL" IS USED TO DESCRIBE OPERATIONS AT PROJECT SITE INCLUDING THE ACTUAL "UNLOADING, UNPACKING, ASSEMBLY, ERECTION, PLACING, ANCHORING, APPLYING, WORKING TO DIMENSION, FINISHING, CURING, PROTECTING, CLEANING, AND SIMILAR OPERATIONS."

PROVIDE: THE TERM "PROVIDE" MEANS "TO FURNISH AND INSTALL, COMPLETE AND READY FOR THE INTENDED USE."

INSTALLER: AN "INSTALLER" IS THE CONTRACTOR OR AN ENTITY ENGAGED BY THE CONTRACTOR, EITHER AS AN EMPLOYEE, SUBCONTRACTOR, OR SUB-SUBCONTRACTOR, FOR PERFORMANCE OF A PARTICULAR CONSTRUCTION ACTIVITY, INCLUDING INSTALLATION, ERECTION, APPLICATION, AND SIMILAR OPERATIONS. INSTALLERS ARE REQUIRED TO BE EXPERIENCED IN THE OPERATIONS THEY ARE ENGAGED TO PERFORM.

TECHNOLOGY SYSTEMS: THE TERM "TECHNOLOGY SYSTEMS" IS USED TO DESCRIBE ALL LOW VOLTAGE SYSTEMS GENERALLY REFERRED TO AS "SPECIAL SYSTEMS". THESE SYSTEMS INCLUDE BUT ARE NOT NECESSARILY LIMITED TO ALL SYSTEMS WHICH UTILIZE VOLTAGES OF LESS THAN 71 VOLTS SUCH AS SOUND SYSTEMS, VIDEO SYSTEMS, TV SYSTEMS, SECURITY SYSTEMS, VOICE AND DATA CABLING SYSTEMS, ETC...

ELECTRICAL SHEET INDEX

EE001	SHEET INDEX, ABBREVIATIONS, AND GENERAL NOTES
EE002	SYMBOLS LEGEND
EE501	ELECTRICAL DETAILS
EE701	TYPICAL MOUNTING HEIGHT DETAILS
EE702	TYPICAL DETAILS
EE703	TYPICAL LABLING DETAILS
ED101	LEVEL 1 FLOOR DEMO PLAN
ED102	LEVEL 2 FLOOR DEMO PLAN
ED104	LEVEL 1 RCP DEMO PLAN
ED105	ENLARGED LEVEL 1 RCP DEMO PLAN
ED106	LEVEL 2 RCP DEMO PLAN
EP101	LEVEL 1 POWER PLAN
EP102	LEVEL 2 POWER PLAN
EP102.1	LEVEL 2 POWER PLAN ADD ALTERNATE #1
EP103	ROOF POWER PLAN
EP601	ONE-LINE DIAGRAM
EP602	ELECTRICAL SCHEDULES
EP603	PANEL SCHEDULES & AIC CALC & RISERS
EP604	PANEL SCHEDULES
EL101	LEVEL 1 LIGHTING PLAN
EL102	LEVEL 2 LIGHTING PLAN
EL102.1	LEVEL 2 LIGHTING PLAN ADD ALTERNATE #1
EL401	LIGHTING SECTIONS
EL601	INTERIOR LIGHTING FIXTURE SCHEDULE
EL602	EXTERIOR LIGHTING FIXTURE SCHEDULE
EL603	NETWORK LIGHTING CONTROL DIAGRAM & RISERS
EL604	LIGHTING CONTROL SCHEDULES
EL605	LIGHTING CONTROL SCHEDULES
ET001	TELECOM SCHEDULES AND NOTES
ET101	LEVEL 1 TELECOM FLOOR PLAN
ET102	LEVEL 2 TELECOM FLOOR PLAN
ET102.1	LEVEL 2 TELECOM FLOOR PLAN ADD ALTERNATE #1
ET401	ENLARGED TELECOM PLANS & RACK ELEVATION
ET501	TELECOM DETAILS
ET502	TELECOM DETAILS
ET601	CONDUIT & TELECOM RISER DIAGRAMS
EY101	LEVEL 1 AUXILIARY PLAN
EY102	LEVEL 2 AUXILIARY PLAN
EY102.1	LEVEL 2 AUXILIARY PLAN ADD ALTERNATE #1
EY501	AUXILIARY DETAILS
EY601	AUXILIARY RISER DIAGRAMS
FA101	LEVEL 1 FIRE ALARM PLAN
FA102	LEVEL 2 FIRE ALARM PLAN
FA102.1	LEVEL 2 FIRE ALARM PLAN ADD ALTERNATE #1
FA103	ROOF FIRE ALARM PLAN
FA601	FIRE ALARM RISER

ABBREVIATIONS

NOTE: ALL ABBREVIATIONS MAY NOT BE USED.

1P	SINGLE POLE
1PH	SINGLE-PHASE
1WAY	ONE-WAY
2/C	TWO-CONDUCTOR
2WAY	TWO-WAY
3/C	THREE-CONDUCTOR
3WAY	THREE-WAY
4OUT	QUADRUPLE RECEPTACLE OUTLET
4W	FOUR-WIRE
4WAY	FOUR-WAY
A	ABOVE COUNTER
AC	ARMORED CABLE
ADA	AMERICANS WITH DISABILITIES ACT
ADJ	ADJACENT
AFF	ABOVE FINISHED FLOOR
AFG	ABOVE FINISHED GRADE
AIC	AMPERE INTERRUPTING CAPACITY
ALUM	ALUMINUM
AMP	AMPERE
ANN	ANNUNCIATOR
AP	ACCESS POINT (WIRELESS DATA)
AR	AS REQUIRED
ASC	AMPS SHORT CIRCUIT
ATS	AUTOMATIC TRANSFER SWITCH
AV	AUDIO VISUAL
AWG	AMERICAN WIRE GAGE
BB XFMR	BUCK-BOOST TRANSFORMER
C	CEILING MOUNTED
CATV	COMMUNITY ANTENNA TELEVISION
CB	CIRCUIT BREAKER
CCBA	CUSTOM COLOR AS SELECTED BY ARCHITECT
CCTV	CLOSED CIRCUIT TELEVISION
CF/CI	CONTRACTOR FURNISHED/ CONTRACTOR INSTALLED
CF/OI	CONTRACTOR FURNISHED/ OWNER INSTALLED
CFBA	CUSTOM FINISH AS SELECTED BY ARCHITECT
CKT	CIRCUIT
CM	CONSTRUCTION MANAGER
CND	CONDUIT
CO	CONVENIENCE OUTLET
COR	CONTRACTING OFFICER'S REPRESENTATIVE
CP	CONTROL PANEL
CT	CURRENT TRANSFORMER
CTV	CABLE TELEVISION
CU	COPPER
dBA	UNIT OF SOUND LEVEL
DPDT	DOUBLE POLE, DOUBLE THROW
DS	DISCONNECT SWITCH
EA	EACH
EM	EMERGENCY
EMT	ELECTRICAL METALLIC TUBING
ENT	ELECTRIC NONMETALLIC TUBING
EPO	EMERGENCY POWER OFF
EQUIP	EQUIPMENT
EX	EXISTING
F	FURNITURE MOUNTED
FA	FIRE ALARM
FCP	FIRE ALARM CONTROL PANEL
FLA	FULL LOAD AMPS
FMC	FLEXIBLE METAL CONDUIT
FOB	FREIGHT ON BOARD
FVNR	FULL VOLTAGE NON-REVERSING
FVR	FULL VOLTAGE REVERSING
G	GROUND
GEN	GENERATOR
GFCI	GROUND FAULT INTERRUPTER
GFP	GROUND FAULT PROTECTION
HD	HEAVY DUTY
HID	HIGH INTENSITY DISCHARGE
HOA	HAND-OFF-AUTOMATIC
HP	HORSE POWER
HPF	HIGH POWER FACTOR
HPS	HIGH PRESSURE SODIUM
HV	HIGH VOLTAGE
HZ	HERTZ
I/O	INPUT/ OUTPUT
IG	ISOLATED GROUND
IMC	INTERMEDIATE METAL CONDUIT
IN/IS	INSULATED/ ISOLATED
IR	INFRARED
J-BOX	JUNCTION BOX
kV	KILOVOLT
kVA	KILOVOLT AMPERE
kVAR	KILOVOLT AMPERE REACTIVE
kW	KILOWATT
kWh	KILOWATT HOUR
LED	LIGHT EMITTING DIODE
LFMC	LIQUID TIGHT FLEXIBLE METAL CONDUIT
LFNC	LIQUID TIGHT FLEXIBLE NONMETALLIC CONDUIT
LPS	LOW PRESSURE SODIUM
LRA	LOCKED ROTOR AMPS
LTG	LIGHTING
LV	LOW VOLTAGE
MATV	MASTER ANTENNA TELEVISION SYSTEM
MAX	MAXIMUM
MC	METAL CLAD
MCA	MINIMUM CIRCUIT AMPS
MCB	MAIN CIRCUIT BREAKER
MCC	MOTOR CONTROL CENTER
MCP	MOTOR CIRCUIT PROTECTION
MDP	MAIN DISTRIBUTION PANEL
MG	MOTOR GENERATOR
MH	MANHOLE
MIN	MINIMUM
MLO	MAIN LUGS ONLY
MOCP	MAXIMUM OVERCURRENT PROTECTION
NA	NOT APPLICABLE
NC	NORMALLY CLOSED
NEC	NATIONAL ELECTRICAL CODE
NEMA	NATIOANL ELECTRICAL MANUFACTURERS ASSOCIATION
NFC	NATIONAL FIRE CODE
NFPA	NATIONAL FIRE PROTECTION ASSOCIATION
NIC	NOT IN CONTRACT
NL	NIGHT LIGHT
NO	NORMALLY OPEN
NTS	NOT TO SCALE
OC	ON CENTER
OCP	OVER CURRENT PROTECTION
OF/CI	OWNER FURNISHED/ CONTRACTOR INSTALLED
OF/OI	OWNER FURNISHED/ OWNER INSTALLED
OFP	OBTAIN FROM PLANS
OH DR	OVERHEAD (COILING) DOOR
OL	OVERLOAD
PB	PUSHBUTTON
PF	POWER FACTOR
PH	PHASE
PNL	PANEL
PT	POTENTIAL TRANSFORMER
PTZ	PAN/TILT/ZOOM
QTY	QUANTITY
R	REMOVE
RCP	REFLECTED CEILING PLAN
RMC	RIGID METAL CONDUIT
RNC	RIGID NONMETAL CONDUIT
RPM	REVOLUTIONS PER MINUTE
RR	REMOVE AND RELOCATE
S/S	START/STOP
SCA	SHORT CIRCUIT AMPS
SCBA	STANDARD COLOR AS SELECTED BY ARCHITECT
SF	SQUARE FOOT (FEET)
SFBA	STANDARD FINISH AS SELECTED BY ARCHITECT
SPD	SURGE PROTECTIVE DEVICE
SPDT	SINGLE POLE, DOUBLE THROW
SPEC	SPECIFICATION
SPST	SINGLE POLE, SINGLE THROW
ST	SINGLE THROW
STC	SOUND TRANSMISSION CLASS
SWBD	SWITCHBOARD
SWGR	SWITCHGEAR
TL	TWIST LOCK
TP	TELEPHONE POLE
TP	TWISTED PAIR
TTB	TELEPHONE TERMINAL BOARD
TV	TELEVISION
TVSS	TRANSIENT VOLTAGE SURGE SUPPRESSER
TYP	TYPICAL
UF	UNDERFLOOR
UGND	UNDERGROUND
UPS	UNINTERRUPTIBLE POWER SUPPLY
V	VOLTS
VA	VOLT AMPERE
VFC/VFD	VARIABLE FREQUENCY MOTOR CONTROLLER
W/	WITH
W/O	WITHOUT
WP	WEATHERPROOF
XFMR	TRANSFORMER

GENERAL ELECTRICAL NOTES

1. CLARIFICATION METHODS: AT THE TIME OF BIDDING, BIDDERS SHALL FAMILIARIZE THEMSELVES WITH THE DRAWINGS AND SPECIFICATIONS. ANY QUESTIONS, MISUNDERSTANDINGS, CONFLICTS, DELETIONS, DISCONTINUED PRODUCTS, CATALOG NUMBER DISCREPANCIES, DISCREPANCIES BETWEEN THE EQUIPMENT SUPPLIED AND THE INTENT OR FUNCTION OF THE EQUIPMENT, ETC, SHALL BE SUBMITTED TO THE ARCHITECT/ENGINEER IN WRITING FOR CLARIFICATION PRIOR TO ISSUANCE OF THE FINAL ADDENDUM AND BIDDING OF THE PROJECT. WHERE DISCREPANCIES OR MULTIPLE INTERPRETATIONS OCCUR, THE MOST STRINGENT (WHICH IS GENERALLY RECOGNIZED AS THE MOST COSTLY) THAT MEETS THE INTENT OF THE DOCUMENTS SHALL BE ENFORCED.

2. OWNER FURNISHED ITEMS: THE OWNER WILL FURNISH MATERIAL AND EQUIPMENT AS INDICATED IN THE CONTRACT DOCUMENTS TO BE INCORPORATED INTO THE WORK. THESE ITEMS ARE ASSIGNED TO THE INSTALLER AND COSTS FOR RECEIVING, HANDLING, STORAGE, IF REQUIRED, AND INSTALLATION ARE INCLUDED IN THE CONTRACT SUM.
   - A. THE INSTALLER'S RESPONSIBILITIES ARE THE SAME AS IF THE INSTALLER FURNISHED THE MATERIALS OR EQUIPMENT.
   - B. THE OWNER WILL ARRANGE AND PAY FOR DELIVERY OF OWNER FURNISHED ITEMS FREIGHT ON BOARD JOB SITE AND THE INSTALLER WILL INSPECT DELIVERIES FOR DAMAGE. IF OWNER FURNISHED ITEMS ARE DAMAGED, DEFECTIVE OR MISSING, DOCUMENT DAMAGED ITEMS WITH THE TRANSPORT COMPANY AND THE OWNER WILL ARRANGE FOR REPLACEMENT. THE OWNER WILL ALSO ARRANGE FOR MANUFACTURER'S FIELD SERVICES, AND THE DELIVERY OF MANUFACTURER'S WARRANTIES AND BONDS TO THE INSTALLER.
   - C. THE INSTALLER IS RESPONSIBLE FOR DESIGNATING THE DELIVERY DATES OF OWNER FURNISHED ITEMS AND FOR RECEIVING, UNLOADING AND HANDLING OWNER FURNISHED ITEMS AT THE SITE.THE INSTALLER IS RESPONSIBLE FOR PROTECTING OWNER FURNISHED ITEMS FROM DAMAGE, INCLUDING DAMAGE FROM EXPOSURE TO THE ELEMENTS, AND TO REPAIR OR REPLACE ITEMS DAMAGED AS A RESULT OF HIS OPERATIONS.

3. EXPOSED STRUCTURE AREAS (EXCLUDING MECHANICAL, ELECTRICAL, AND COMMUNICATION SPACES): INSTALL RACEWAYS BETWEEN DECK AND STRUCTURE WHEREVER POSSIBLE IN EXPOSED STRUCTURE CEILING AREAS. ROUTE RACEWAYS IN CONCEALED AREAS WHEREVER POSSIBLE. REFER ALL CONDITIONS WHERE RACEWAYS MUST BE INSTALLED WHICH CANNOT COMPLY WITH THESE REQUIREMENTS TO THE ARCHITECT.

4. SUBMITTALS: PROVIDE ORIGINAL ELECTRONIC PDF FORMAT, BOUND, BOOKMARKED (EACH SECTION AND PRODUCT), AND HIGHLIGHTED. JOB NAME AND SUBCONTRACTOR SHALL BE ON THE FRONT COVER. PREPARE INDEX OF EQUIPMENT SUBMITTED IN EACH TAB.

5. REFLECTED CEILING PLANS: COORDINATE THE LOCATION OF LIGHT FIXTURES WITH THE ARCHITECTURAL REFLECTED CEILING PLANS. REFER ALL DISCREPANCIES TO THE ARCHITECT AND ENGINEER.

6. ALL WORK SHALL BE DONE ACCORDING TO THE CURRENT NATIONAL ELECTRIC CODE (NEC), IBC, NFPA, AND IFC. COMPLIANCE AND FINAL APPROVAL IS SUBJECT TO THE ON SITE FIELD INSPECTION OF THE AHJ.

SITE COORDINATION

THE LOCATION, CAPACITY, AND VOLTAGE OF THE LINES ARE ALL IN ACCORDANCE WITH DATA GIVEN THIS OFFICE BY THE UTILITY COMPANY. COORDINATE WITH THE LOCAL UTILITY COMPANY FOR THE INSTALLATION OF THE ELECTRICAL SERVICE. COMPLY WITH UTILITY REGULATIONS. REPORT DISCREPANCIES TO THE ENGINEER.

ELECTRIC UTILITY

U OF U ELECTRICAL SHOP

PERSON CONTACTED: - KEVIN THOMAS
DATE: -
PHONE NUMBER: - 801-587-8760
EMAIL: - KEVIN.TOMAS@UTAH.EDU

ADD ALTERNATES

ADD ALT #01 - OFFICE/WAR ROOM BULD OUT
ADD ALT #02 - EXTERIOR DECK
ADD ALT #03 - INTERIOR OBSERVATION AREA
ADD ALT #04 - SAUNA

ARCHITECT 1877

ajc architects

703 east 1700 south
salt lake city, utah 84105
ph: 801.466.8818
fx: 801.466.4411
www.ajcarchitects.com

LICENSED PROFESSIONAL ENGINEER
No. 5497590-2202
Christopher Kelly Kobayashi
STATE OF UTAH
10.01.21

CONSULTANT

SPECTRUM ENGINEERS
324 S. State St., Suite 400
Salt Lake City, UT 84111
800-678-7077
801-328-5151
fax: 801-328-5155
www.spectrum-engineers.com

OWNER INFORMATION

PROJECT DESCRIPTION

DUMKE GYMNASTICS TRAINING CENTER:

1825 E. SOUTH CAMPUS DRIVE
SALT LAKE CITY, UT 84112

AHJ STAMP

SHEET NAME:

SHEET INDEX, ABBREVIATIONS, AND GENERAL NOTES

REVISIONS

MARK DATE DESCRIPTION

ISSUE DATA

ISSUE DATE: 10.01.21
ISSUE TYPE: CD
DRAWN BY: IBC
CHECKED BY: LSK
PROJECT#: 1877

SHEET NUMBER:

EE001

SYMBOLS LEGEND

SYMBOL	DESCRIPTION
FIRE ALARM	
FSA	FIRE SYSTEM ANNUNCIATOR.
FCP	FIRE ALARM CONTROL PANEL, SEMI-RECESSED.
FPS	FIRE ALARM NOTIFICATION POWER SUPPLY.
CM	CONTROL MODULE.
MM	MONITOR MODULE.
P	FIRE ALARM MANUAL PULL STATION.
R	SHUT DOWN RELAY: INSTALL RELAY IN CONTROL CIRCUIT OF EQUIPMENT TO BE CONTROLLED IN THE EVENT OF A FIRE.
	DETECTOR, SMOKE.
E	DETECTOR, SMOKE, ELEVATOR RECALL DESIGNATION.
	DETECTOR, SMOKE, DUCT WITH HOUSING AND SAMPLING TUBE.
	DETECTOR, HEAT.
	STROBE.
75	STROBE. SUBSCRIPT INDICATES CANDELA RATING.
WP	ALARM, HORN/SPEAKER, WEATHERPROOF.
	ALARM, HORN/STROBE, ONE ASSEMBLY.
75	ALARM, HORN/STROBE, ONE ASSEMBLY. SUBSCRIPT INDICATES CANDELA RATING.
	DETECTOR, FLOW SWITCH: FLOW SWITCHES SHALL BE PROVIDED AND INSTALLED WITH FIRE SPRINKLER SYSTEM AND SHALL BE CONNECTED TO LOCATIONS SHOWN ON THE FIRE SPRINKLER SHOP DRAWINGS.
	DETECTOR, TAMPER SWITCH WITH VALVE: TAMPER SWITCHES SHALL BE PROVIDED AND INSTALLED WITH FIRE SPRINKLER SYSTEM AND SHALL BE CONNECTED TO LOCATIONS SHOWN ON THE FIRE SPRINKLER SHOP DRAWINGS.
SD	SMOKE DAMPER.
FSD	FIRE AND SMOKE DAMPER.
CO	DETECTOR, CARBON MONOXIDE.
	DETECTOR, SMOKE/STROBE, RESIDENTIAL.
75	ALARM, HORN/STROBE, ONE ASSEMBLY, CEILING MOUNTED. SUBSCRIPT INDICATES CANDELA RATING.
75	ALARM, HORN, CEILING MOUNTED. SUBSCRIPT INDICATES CANDELA RATING.
75	ALARM, STROBE, CEILING MOUNTED. SUBSCRIPT INDICATES CANDELA RATING.
CLOCK	
C	CLOCK.
CCTV	
	CCTV CAMERA/ENCLOSURE WITH LENS, TYPICAL. SEE SCHEDULE.
SECURITY	
ACC	ACCESS CONTROL HEADEND EQUIPMENT.
CTR	SECURITY CONTROL PANEL.
SEC	INTRUSION DETECTION HEADEND EQUIPMENT.
CR	CARD READER.

SYMBOLS LEGEND

SYMBOL	DESCRIPTION
WIRING DEVICES	
	RECEPTACLE, DUPLEX: NEMA 5-20R.
A	RECEPTACLE, DUPLEX, ABOVE COUNTER: NEMA 5-20R.
C	RECEPTACLE, DUPLEX, CEILING: NEMA 5-20R.
WP	RECEPTACLE, DUPLEX, WEATHERPROOF: NEMA 5-20R.
	RECEPTACLE, DUPLEX ON EMERGENCY POWER: NEMA 5-20R.
	RECEPTACLE, DUPLEX WITH GROUND FAULT CIRCUIT INTERRUPTER: NEMA 5-20R.
WP	RECEPTACLE, DUPLEX WITH GROUND FAULT CIRCUIT INTERRUPTER, WEATHERPROOF: NEMA 5-20R.
	IN FLOOR RECEPTACLE, DUPLEX: NEMA 5-20R.
	RECEPTACLE, QUADRAPLEX: NEMA 5-20R.
	RECEPTACLE, QUADRAPLEX ON EMERGENCY POWER: NEMA 5-20R.
	RECEPTACLE, QUADRAPLEX WITH GROUND FAULT CIRCUIT INTERRUPTER: NEMA 5-20R.
	RECEPTACLE, SPECIAL PURPOSE. PROVIDE RECEPTACLE TO MATCH EQUIPMENT PLUG.
	RECEPTACLE, SPECIAL PURPOSE ON EMERGENCY POWER. PROVIDE RECEPTACLE TO MATCH EQUIPMENT PLUG.
FB#	FLUSH FLOOR BOX. "#" SHOWN ON DRAWINGS. REFER TO WIRING DEVICE SCHEDULE IN THE ELECTRICAL SPECIFICATIONS FOR CONFIGURATION AND DEVICES.
LIGHTING (REFER TO FIXTURE SCHEDULE FOR SYMBOLS)	
(W-3)	FIXTURE IDENTIFICATION: (W-3) INDICATES FIXTURE TYPE AS SCHEDULED.
(W-3)	FIXTURE IDENTIFICATION, EMERGENCY WITH BATTERY PACK, CONNECTED TO GENERATOR AS INDICATED: (W-3) INDICATES FIXTURE TYPE AS SCHEDULED.
EM	EMERGENCY.
NL	NIGHT LIGHT: DO NOT SWITCH.
↑	EGRESS DIRECTION ARROW (EXIT SIGNS).
EB	REMOTE EMERGENCY BATTERY PACK.
	EXIT SIGN: SINGLE FACE; CEILING MOUNTED
	EXIT SIGN: SINGLE FACE; WALL MOUNTED
	EXIT SIGN: DOUBLE FACE; CEILING MOUNTED
	EXIT SIGN: DOUBLE FACE; WALL MOUNTED
LIGHTING CONTROL	
	OCCUPANCY SENSOR, DUAL TECHNOLOGY, OMNI-DIRECTIONAL, CEILING.
	VACANCY SENSOR, DUAL TECHNOLOGY, OMNI-DIRECTIONAL, CEILING.
P	PHOTOCELL.
a,b $	LOW VOLTAGE DIGITAL LIGHTING CONTROL SWITCH: LETTER "a,b" INDICATES ZONING WHERE SHOWN (REFER TO PLANS, SCHEDULES, AND DETAILS FOR EXACT BUTTON CONFIGURATION AND PROGRAMMING REQUIREMENTS)
DC	DIGITAL LIGHTING DIMMING CONTROLLER
NB	LIGHTING NETWORK BRIDGE.
RC	DIGITAL LIGHTING ROOM CONTROLLER
SM	LIGHTING NETWORK SEGMENT MANAGER
L X	LIGHTING SPACE CONTROL TYPE. X INDICATES TYPE. SEE SCHEDULE / DIAGRAM.
STRUCTURED CABLING	
	DATA CONNECTION: WIRELESS ACCESS POINT (WAP). REQUIRES (2) DATA DROPS PER DEVICE
▼X	OUTLET, DATA COMMUNICATION ("X" INDICATES QUANTITY OF CABLES).
	TELEPHONE TERMINAL BOARD, FIRE TREATED PLYWOOD PAINTED.
	LAN RACK, FLOOR STANDING.
——D——	DATA CABLE, CATEGORY 5 (ONE-LINE DIAGRAM).
2WAY-M	2-WAY COMMUNICATION MAIN CONTROL PANEL.
2WAY-PS	2-WAY COMMUNICATION POWER SUPPLY.
2WAY	2-WAY COMMUNICATION CALL BUTTON.

SYMBOLS LEGEND

SYMBOL	DESCRIPTION
REFERENCE AND LINE SYMBOLS	
A5 E-501	DETAIL INDICATOR: A5 INDICATES DETAIL NUMBER, E-501 INDICATES DRAWING SHEET WHERE DETAIL IS SHOWN.
A5 E-201	ELEVATION OR SECTION INDICATOR, EXTERIOR: A5 INDICATES ELEVATION OR SECTION NUMBER, E-201 INDICATES DRAWING SHEET WHERE ELEVATION OR SECTION IS SHOWN.
ROOM NAME 100	ROOM IDENTIFIER WITH ROOM NAME AND NUMBER.
1	KEYNOTE INDICATOR.
1	REVISION INDICATOR.
X-X XMDP	MECHANICAL EQUIPMENT INDICATOR. "X-X" INDICATES EQUIPMENT MARK SHOWN ON EQUIPMENT SCHEDULE. "XMDP" IDENTIFIES PANEL EQUIPMENT IS CIRCUITED TO. REFER TO EQUIPMENT SCHEDULE FOR ADDITIONAL INFORMATION.
	BREAK, STRAIGHT: TO BREAK PARTS OF DRAWING
	BREAK, ROUND
WIRING METHODS	
	WIRING.
A-1,3,5	BRANCH CIRCUIT HOME RUN TO PANELBOARD: NUMBER OF ARROWS INDICATES NUMBER OF CIRCUITS. LETTER AND NUMBER NOTATIONS IDENTIFY PANEL AND CIRCUIT NUMBERS. USE #12 CONDUCTORS, EXCEPT #10 CONDUCTORS SHALL BE INSTALLED IF DISTANCES EXCEED THOSE SPECIFIED IN THE ELECTRICAL SPECIFICATIONS.
	LOW VOLTAGE WIRING: DIVIDE, MEDIUM LINE.
1	CONDUCTOR & CONDUIT ("CC") SCHEDULE INDICATOR. REFER TO ONE-LINE DIAGRAM.
HC	ADA ACCESS PUSH PLATE
	JUNCTION BOX.
SC	JUNCTION BOX, SYSTEMS FURNITURE COMMUNICATION CONNECTION.
	EARTH GROUND (ONE-LINE DIAGRAM).
	LADDER RACK.
	MECHANICAL EQUIPMENT CONNECTION. REFER TO EQUIPMENT SCHEDULE FOR REQUIREMENTS.
ELECTRICAL POWER AND DISTRIBUTION	
	TRANSFER SWITCH (ONE-LINE DIAGRAM).
DMM	DIGITAL MULTIMETER (ONE-LINE DIAGRAM).
	SERVICE ENTRANCE SURGE PROTECTION (ONE-LINE DIAGRAM).
G	GENERATOR, ANNUNCIATOR (ONE-LINE DIAGRAM).
G	GENERATOR, POWER (ONE-LINE DIAGRAM).
M	METER.
	DISCONNECT SWITCH, FUSED.
	DISCONNECT SWITCH, UNFUSED.
	STARTER, COMBINATION WITH DISCONNECT SWITCH.
	STARTER OR MOTOR CONTROLLER.
	PUSHBUTTONS, MOTOR CONTROL.
	PANELBOARD CABINET, FLUSH MOUNTED.
	PANELBOARD CABINET, SURFACE MOUNTED, 1 SECTION.
	PANELBOARD CABINET, SURFACE MOUNTED, 2 SECTION.
DP#__	DISTRIBUTION PANEL OR SWITCHBOARD.
LP	LIGHTING RELAY, CONTACTOR PANEL, OR DIMMING ENCLOSURE.
	LIGHTING CONTROL STATION.
	DIMMING ENTRY STATION OR CONTROL STATION, FLUSH MOUNTED.
	CENTRAL PROCESSOR UNIT.
$ST	SWITCH, TOGGLE MOTOR STARTER WITH OVERLOAD PROTECTION.
HC	ACCESSIBLE DOOR ENTRY PUSH PLATE OPERATOR.

SYMBOLS LEGEND

SYMBOL	DESCRIPTION
ELECTRICAL POWER AND DISTRIBUTION	
	FUSE WITH RATING (ONE-LINE DIAGRAM).
	DISCONNECT, FUSED (ONE-LINE DIAGRAM).
	DISCONNECT, NONFUSED (ONE-LINE DIAGRAM).
	DISCONNECT WITH FUSE AND MOTOR STARTER COMBINATION (ONE-LINE DIAGRAM).
	OVERLOAD RELAY (ONE-LINE DIAGRAM).
	STARTER (ONE-LINE DIAGRAM).
	CIRCUIT BREAKER, MOLDED CASE (ONE-LINE DIAGRAM).
	CIRCUIT BREAKER, MOLDED CASE WITH SHUNT TRIP (ONE-LINE DIAGRAM).
MCP	CIRCUIT BREAKER, MOTOR CIRCUIT PROTECTION (ONE-LINE DIAGRAM).
	CIRCUIT BREAKER, SOLID STATE (ONE-LINE DIAGRAM).
GFP	CIRCUIT BREAKER, SOLID STATE WITH GROUND FAULT PROTECTION (ONE-LINE DIAGRAM).
	MOTOR.
L	COMBINATION RESIDENTIAL EXHAUST FAN/LIGHT.
F	EXHAUST FAN OUTLET.
	HEATER, ELECTRIC RESISTANCE.
	TRANSFORMER (ONE-LINE DIAGRAM).
	TRANSFORMER, CURRENT (ONE-LINE DIAGRAM).
	BATTERY (ONE-LINE DIAGRAM).
	CAPACITOR (ONE-LINE DIAGRAM).
	DELTA CONNECTION (ONE-LINE DIAGRAM).
	WYE CONNECTION (ONE-LINE DIAGRAM).
"1H"	PANELBOARD (ONE-LINE DIAGRAM).
225/3 "1H"	PANELBOARD WITH MAIN LUGS ONLY. BUS SIZE AND PHASE AS SHOWN (ONE-LINE DIAGRAM).
225/3 "1H"	PANELBOARD WITH MAIN CIRCUIT BREAKER. SIZE AND PHASE AS SHOWN (ONE-LINE DIAGRAM).
225/3 "1H" 60/3	PANELBOARD WITH MAIN AND SUB FEED CIRCUIT BREAKER (ONE-LINE DIAGRAM).
225/3 "1H" 25/3	PANELBOARD WITH MAIN LUGS ONLY AND SURGE PROTECTION WITH CIRCUIT BREAKER (ONE-LINE DIAGRAM).

ARCHITECT 1877

ajc architects

703 east 1700 south
salt lake city, utah 84105
ph: 801.466.8818
fx: 801.466.4411
www.ajcarchitects.com

LICENSED PROFESSIONAL ENGINEER
No. 5497590-2202
Christopher Kelly Kobayashi
STATE OF UTAH
10.01.21

CONSULTANT

SPECTRUM ENGINEERS
324 S. State St., Suite 400
Salt Lake City, UT 84111
800-678-7077
801-328-5151
fax: 801-328-5155
www.spectrum-engineers.com

OWNER INFORMATION

PROJECT DESCRIPTION

DUMKE GYMNASTICS TRAINING CENTER:

1825 E. SOUTH CAMPUS DRIVE
SALT LAKE CITY, UT 84112

AHJ STAMP

SHEET NAME:

SYMBOLS LEGEND

REVISIONS

MARK DATE DESCRIPTION

ISSUE DATA

ISSUE DATE: 10.01.21
ISSUE TYPE: CD
DRAWN BY: IBC
CHECKED BY: LSK
PROJECT#: 1877

SHEET NUMBER:

EE002

10/3/2021 1:34:48 PM C:\Users\ibc\Desktop\Revit Local Files\2020\20191093 ELEC Central_IBC-Spectrum.rvt

ALL IDEAS, DESIGNS, ARRANGEMENTS AND PLANS INDICATED OR REPRESENTED BY THIS DRAWING ARE OWNED BY AND THE PROPERTY OF AJC ARCHITECTS PC AND WERE CREATED, EVOLVED, AND DEVELOPED FOR USE ON AND IN CONNECTION WITH THE SPECIFIED PROJECT. NONE OF THE IDEAS, DESIGNS, ARRANGEMENTS OR PLANS SHALL BE USED BY OR DISCLOSED TO ANY PERSON, FIRM, OR CORPORATION FOR ANY PURPOSE WHATSOEVER WITHOUT WRITTEN CONSENT OF AJC ARCHITECTS PC. WRITTEN DIMENSIONS ON THESE DRAWINGS SHALL HAVE PRECEDENCE OVER SCALE DIMENSIONS. CONTRACTORS SHALL VERIFY AND BE RESPONSIBLE FOR ALL DIMENSIONS AND CONDITIONS ON THE JOB AND THIS OFFICE MUST BE NOTIFIED OF ANY VARIATION FROM THE DIMENSIONS AND CONDITIONS SHOWN BY THESE DRAWINGS. WARNING: REPRODUCTION HEREOF IS A CRIMINAL OFFENSE UNDER 18 U.S.C. SEC. 506. UNAUTHORIZED DISCLOSURE MAY CONSTITUTE TRADE SECRET MISAPPROPRIATION IN VIOLATION OF I.C.24-2-31-1 ET. SEQ. AND OTHER LAWS.

ALL IDEAS, DESIGNS, ARRANGEMENTS AND PLANS INDICATED OR REPRESENTED BY THIS DRAWING ARE OWNED BY AND THE PROPERTY OF AJC ARCHITECTS PC AND WERE CREATED, EVOLVED AND DEVELOPED FOR USE ON AND IN CONNECTION WITH THE SPECIFIED PROJECT. NONE OF THE IDEAS, DESIGNS, ARRANGEMENTS OR PLANS SHALL BE USED BY OR DISCLOSED TO ANY PERSON, FIRM OR CORPORATION FOR ANY PURPOSE WHATSOEVER WITHOUT WRITTEN CONSENT OF AJC ARCHITECTS PC. WRITTEN DIMENSIONS ON THESE DRAWINGS SHALL HAVE PRECEDENCE OVER SCALE DIMENSIONS. CONTRACTORS SHALL VERIFY AND BE RESPONSIBLE FOR ALL DIMENSIONS AND CONDITIONS ON THE JOB AND THIS OFFICE MUST BE NOTIFIED OF ANY VARIATION FROM THE DIMENSIONS AND CONDITIONS SHOWN BY THESE DRAWINGS. WARNING: REPRODUCTION HEREOF IS A CRIMINAL OFFENCE UNDER 18 U.S.C. SEC. 506. UNAUTHORIZED DISCLOSURE MAY CONSTITUTE TRADE SECRET MISAPPROPRIATION IN VIOLATION OF 12-24-2-311 ET. SEQ. AND OTHER LAWS.

10/3/2021 1:34:47 PM C:\Users\ibc\Desktop\Revit Local Files\2020\20191093 ELEC Central_IBC-Spectrum.rvt

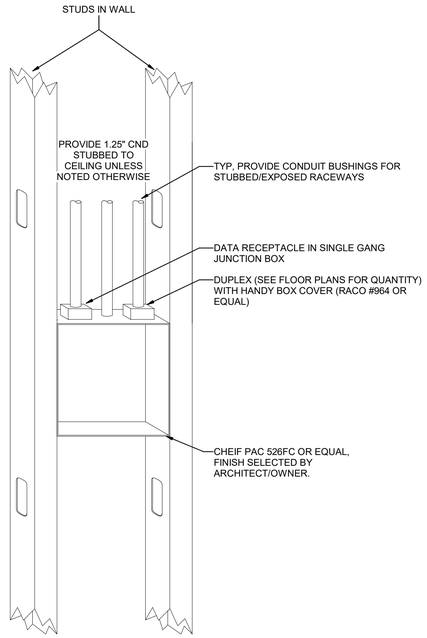

TYPICAL FLAT PANEL RECEPTACLE ROUGH-IN DETAIL

C1 SCALE: NTS

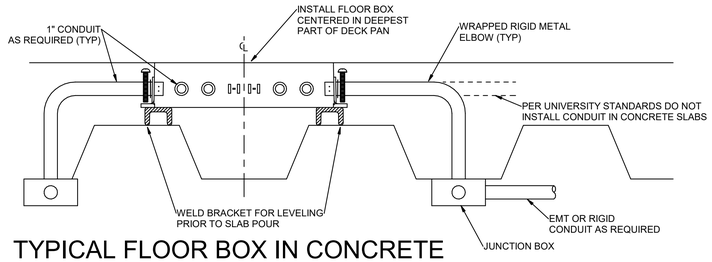

TYPICAL FLOOR BOX IN CONCRETE SLAB

D2 SCALE: NTS

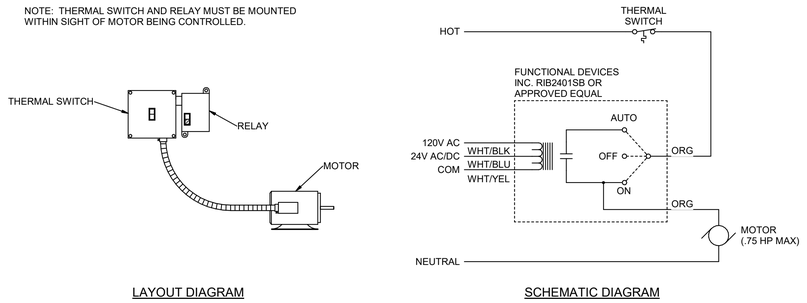

120V FRACTIONAL MOTOR CONTROL

C2 SCALE: NTS

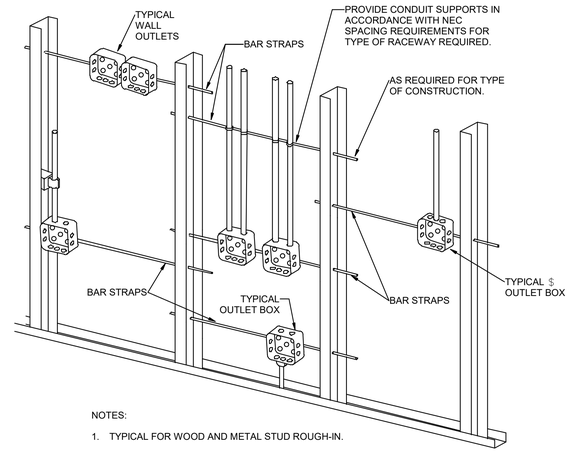

NOTES:

1. TYPICAL FOR WOOD AND METAL STUD ROUGH-IN.
2. PLASTER RINGS NOT SHOWN.
3. LOCATE ALL OUTLET BOXES IN ACCORDANCE WITH ARCHITECTURAL AND MECHANICAL DRAWINGS AND WITH ALL APPLICABLE SHOP DRAWINGS.
4. IN ACCORDANCE WITH IBC 714.3.2 EXCEPTION 1, OUTLETS ON OPPOSITE SIDES OF WALLS OR PARTITIONS IN THE SAME STUD SPACE IN A RATED FIRE SEPARATION WALL MUST BE SEPARATED BY A MINIMUM OF 24" HORIZONTAL DISTANCE OR LISTED, SOUND AND FIRE RATED PUTTY PADS SHALL BE USED ON THE OUTLET BOXES.
5. IN NON-RATED WALLS, OUTLETS ON OPPOSITE SIDES OF WALLS OR PARTITIONS MUST BE SEPARATED BY 16" FOR SOUND ATTENUATION.
6. IN SOUND TRANSMISSION RATED WALLS, NO BACK TO BACK OUTLET BOXES IN SAME STUD SPACE, COORDINATE SEALING AND PENETRATIONS WITH ARCHITECT.

TYPICAL ROUGH-IN REQUIREMENTS DETAIL

B4 SCALE: NTS

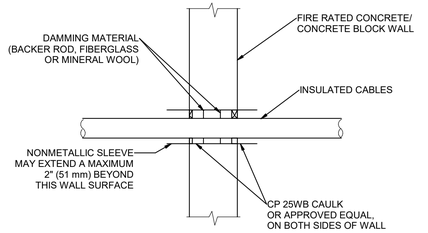

TYPICAL FIRE STOP FOR CABLES/CONDUIT THROUGH CONCRETE WALLS

B1 SCALE: NTS

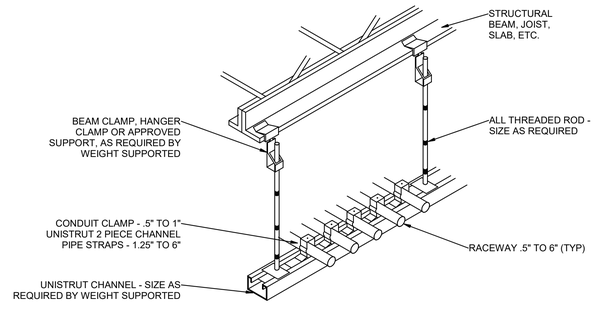

TYPICAL CONDUIT RACK DETAIL

B2 SCALE: NTS

NOTE:
TIE WIRE SHALL NOT BE USED AS A COMPONENT OF ANY RACEWAY HANGER SYSTEM.

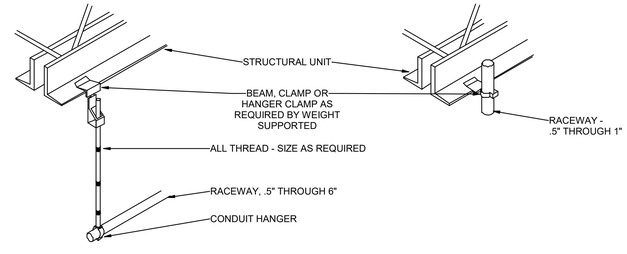

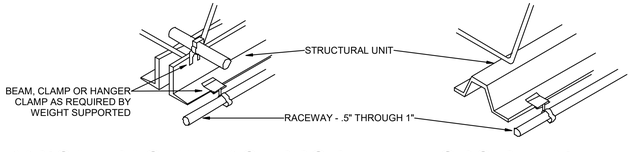

TYPICAL RACEWAY SUPPORT METHODS DETAIL

A4 SCALE: NTS

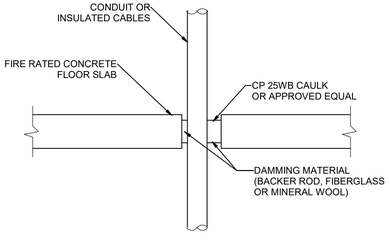

TYPICAL FIRE STOP FOR CABLES/CONDUIT THROUGH CONCRETE FLOORING

A1 SCALE: NTS

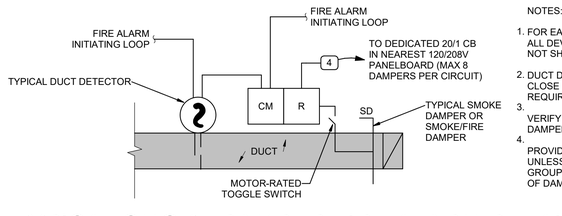

NOTES:

1. FOR EACH SMOKE DAMPER SHOWN ON PLANS, PROVIDE ALL DEVICES AND WIRING PER THIS DETAIL. THESE ARE NOT SHOWN ON PLANS FOR LEGIBILITY PURPOSES.
2. DUCT DETECTOR WITHIN 5' OF EVERY SMOKE DAMPER TO CLOSE DAMPER UPON ACTIVATION PER IMC REQUIREMENTS.
3. VERIFY QUANTITY AND LOCATIONS OF ALL SMOKE DAMPERS WITH THE HVAC INSTALLER.
4. PROVIDE ONE CONTROL MODULE PER SMOKE DAMPER, UNLESS THE REQUIRED CONTROL SEQUENCE ALLOWS GROUPING OF DAMPERS, IN WHICH CASE EACH GROUPING OF DAMPERS MAY SHARE ONE CONTROL MODULE.

TYPICAL SMOKE DAMPER FIRE ALARM DETAIL

A2 SCALE: NTS

ARCHITECT 1877
ajc architects
703 east 1700 south
salt lake city, utah 84105
ph: 801.466.8818
fx: 801.466.4411
www.ajcarchitects.com
LICENSED PROFESSIONAL ENGINEER No. 5497590-2202 Christopher Mark Kirkham STATE OF UTAH
10.01.21

CONSULTANT
SPECTRUM ENGINEERS
324 S. State St., Suite 400
Salt Lake City, UT 84111
800-678-7077
801-328-5151
fax: 801-328-5155
www.spectrum-engineers.com

OWNER INFORMATION

PROJECT DESCRIPTION

DUMKE GYMNASTICS TRAINING CENTER:

1825 E. SOUTH CAMPUS DRIVE
SALT LAKE CITY, UT 84112

AHJ STAMP

SHEET NAME:
ELECTRICAL DETAILS

REVISIONS

MARK	DATE	DESCRIPTION

ISSUE DATA

ISSUE DATE:	10.01.21
ISSUE TYPE:	CD
DRAWN BY:	IBC
CHECKED BY:	LSK
PROJECT#:	1877

SHEET NUMBER:

EE501

ALL IDEAS, DESIGNS, ARRANGEMENTS AND PLANS INDICATED OR REPRESENTED BY THIS DRAWING ARE OWNED BY AND THE PROPERTY OF AJC ARCHITECTS PC AND WERE CREATED, EVOLVED AND DEVELOPED FOR USE ON AND IN CONNECTION WITH THE SPECIFIED PROJECT. NONE OF THE IDEAS, DESIGNS, ARRANGEMENTS OR PLANS SHALL BE USED BY OR DISCLOSED TO ANY PERSON, FIRM OR CORPORATION FOR ANY PURPOSE WHATSOEVER WITHOUT WRITTEN CONSENT OF AJC ARCHITECTS PC. WRITTEN DIMENSIONS ON THESE DRAWINGS SHALL HAVE PRECEDENCE OVER SCALE DIMENSIONS. CONTRACTORS SHALL VERIFY AND BE RESPONSIBLE FOR ALL DIMENSIONS AND CONDITIONS ON THE JOB AND THIS OFFICE MUST BE NOTIFIED OF ANY VARIATION FROM THE DIMENSIONS AND CONDITIONS SHOWN BY THESE DRAWINGS. WARNING: REPRODUCTION HEREOF IS A CRIMINAL OFFENCE UNDER 18 U.S.C. SEC. 506. UNAUTHORIZED DISCLOSURE MAY CONSTITUTE TRADE SECRET MISAPPROPRIATION IN VIOLATION OF 12-24-311 ET. SEQ. AND OTHER LAWS.

10/3/2021 1:34:45 PM C:\Users\ibc\Desktop\Revit Local Files\2020\20191093 ELEC Central_IBC-Spectrum.rvt

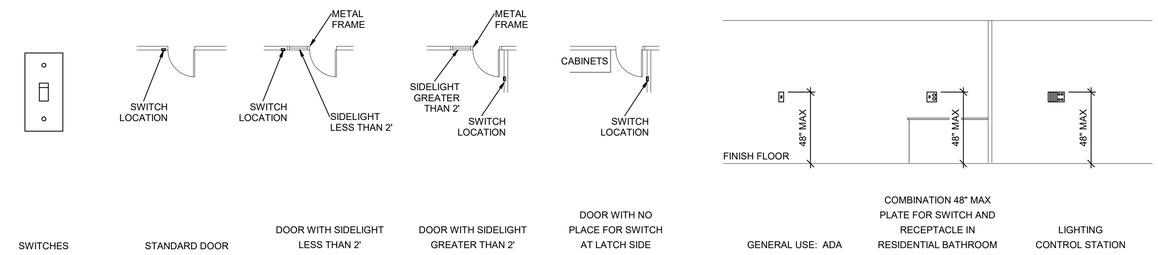

D1 SWITCH MOUNTING DETAILS

SCALE: NTS

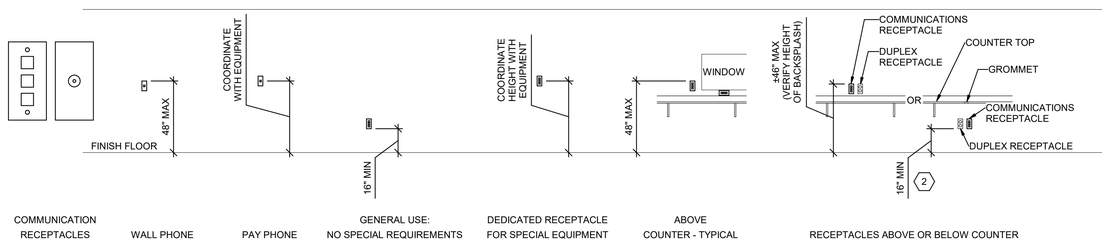

C1 COMMUNICATIONS MOUNTING DETAILS

SCALE: NTS

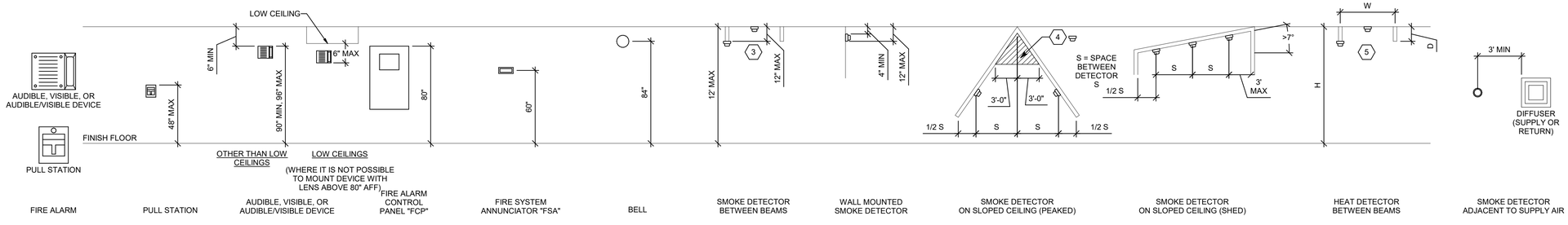

B1 FIRE ALARM MOUNTING DETAILS

SCALE: NTS

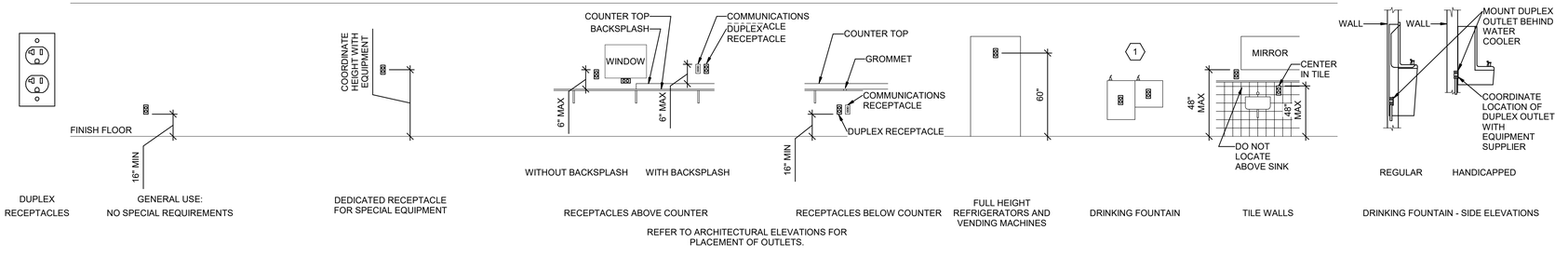

REFER TO ARCHITECTURAL ELEVATIONS FOR PLACEMENT OF OUTLETS.

A1 RECEPTACLE MOUNTING DETAILS

SCALE: NTS

GENERAL SHEET NOTES

1. DETERMINE MOUNTING HEIGHTS OF ELECTRICAL AND ELECTRONIC EQUIPMENT IN THE FOLLOWING ORDER OF PRIORITY:

   1 - ELEVATIONS (ARCHITECTURAL, ELECTRICAL, MECHANICAL, ETC).

   2 - EQUIPMENT SHOP DRAWINGS.

   3 - FIELD INSTRUCTIONS.
2. LOCATE RECEPTACLES SERVING THE SAME TYPE OF USE AT A UNIFORM HEIGHT UNLESS DIRECTED OTHERWISE.
3. MECHANICAL, ELECTRICAL, AND COMMUNICATION ROOMS: COORDINATE LOCATION OF LIGHTING AND POWER RECEPTACLES WITH EQUIPMENT, PIPING, AND DUCTWORK. DO NOT INSTALL RECEPTACLES BEHIND EQUIPMENT OR WHERE OTHERWISE INACCESSIBLE. POSITION LIGHTING REGARDLESS OF WHERE SHOWN ON DRAWING TO PROVIDE PROPER ILLUMINATION.
4. MOUNT RECEPTACLE BOXES FOR SWITCHES AND RECEPTACLES WITH LONG AXIS OF THE DEVICE VERTICAL UNLESS OTHERWISE INDICATED.
5. SET BOXES WITH PLASTER RINGS FLUSH WITH FINISHED SURFACE.
6. LOCATE BOX COVERS OR DEVICE PLATES SO THEY WILL NOT SPAN DIFFERENT TYPES OF BUILDING FINISHES EITHER VERTICALLY OR HORIZONTALLY.
7. VERIFY ALL DOOR CONDITIONS ON ARCHITECTURAL DRAWINGS PRIOR TO INSTALLING SWITCHES.
8. LOCATE WIREING DEVICES WHICH ARE ADJACENT AND ARE COMPATIBLE VOLTAGES IN ONE PLATE.
9. WHERE DEVICES ARE LOCATED IN CLOSE PROXIMITY OF THE SAME VERTICAL PLANE, ALIGN DEVICES VERTICALLY PER THE TYPICAL WALL MOUNTED DEVICES ALIGNMENT DETAIL, UNLESS OTHERWISE INDICATED.

SHEET KEYNOTES

1. LOCATE RECEPTACLES BEHIND DRINKING FOUNTAINS.
2. REFER TO ARCHITECTURAL ELEVATIONS FOR PLACEMENT OF OUTLETS.
3. LOCATE AT BOTTOM OF BEAMS (OR JOISTS) OR AT CEILING. (REDUCE SPACING BY .5 PERPENDICULAR TO BEAM OR JOIST DIRECTION.) FOR OTHER CONDITIONS, REFER TO NFPA 72.
4. LOCATE DETECTOR ANYWHERE IN SHADED AREA BUT NOT IN TOP 4" OF PEAK.
5. LOCATE AT BOTTOM OF BEAMS IF D/H < .1 OR W/H < .4; OTHERWISE, LOCATE IN BEAM POCKET. FOR D > 4 REDUCE SPACING .33 PERPENDICULAR TO BEAMS.

ARCHITECT 1877

ajc architects

703 east 1700 south
salt lake city, utah 84105
ph: 801.466.8818
fx: 801.466.4411
www.ajcarchitects.com

LICENSED PROFESSIONAL ENGINEER No. 5497590-2202 Christopher M. Kirk Kapoosh STATE OF UTAH

10.01.21

CONSULTANT

SPECTRUM ENGINEERS

324 S. State St., Suite 400
Salt Lake City, UT 84111
800-678-7077
801-328-5151
fax: 801-328-5155
www.spectrum-engineers.com

OWNER INFORMATION

PROJECT DESCRIPTION

DUMKE GYMNASTICS TRAINING CENTER:

1825 E. SOUTH CAMPUS DRIVE
SALT LAKE CITY, UT 84112

AHJ STAMP

SHEET NAME:

TYPICAL MOUNTING HEIGHT DETAILS

REVISIONS

MARK	DATE	DESCRIPTION

ISSUE DATA

ISSUE DATE:	10.01.21
ISSUE TYPE:	CD
DRAWN BY:	IBC
CHECKED BY:	LSK
PROJECT#:	1877

SHEET NUMBER:

EE701

10/3/2021 1:34:42 PM C:\Users\lbc\Desktop\Revit Local Files\2020\20191093 ELEC Central_IBC-Spectrum.rvt

ALL IDEAS, DESIGNS, ARRANGEMENTS AND PLANS INDICATED OR REPRESENTED BY THIS DRAWING ARE OWNED BY AND THE PROPERTY OF AJC ARCHITECTS PC AND WERE CREATED, EVOLVED, AND DEVELOPED FOR USE ON AND IN CONNECTION WITH THE SPECIFIED PROJECT. NONE OF THE IDEAS, DESIGNS, ARRANGEMENTS OR PLANS SHALL BE USED BY OR DISCLOSED TO ANY PERSON, FIRM, OR CORPORATION FOR ANY PURPOSE WHATSOEVER WITHOUT WRITTEN CONSENT OF AJC ARCHITECTS PC. WRITTEN DIMENSIONS ON THESE DRAWINGS SHALL HAVE PRECEDENCE OVER SCALE DIMENSIONS. CONTRACTORS SHALL VERIFY AND BE RESPONSIBLE FOR ALL DIMENSIONS AND CONDITIONS ON THE JOB AND THIS OFFICE MUST BE NOTIFIED OF ANY VARIATION FROM THE DIMENSIONS AND CONDITIONS SHOWN BY THESE DRAWINGS. WARNING: REPRODUCTION HEREOF IS A CRIMINAL OFFENCE UNDER 18 U.S.C. SEC. 506. UNAUTHORIZED DISCLOSURE MAY CONSTITUTE TRADE SECRET MISAPPROPRIATION IN VIOLATION OF 17 U.S.C. § 1 ET. SEQ. AND OTHER LAWS.

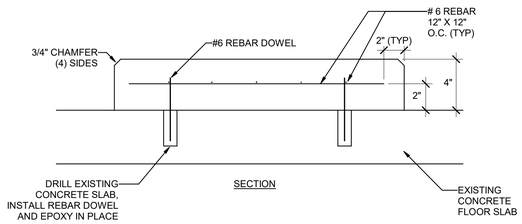

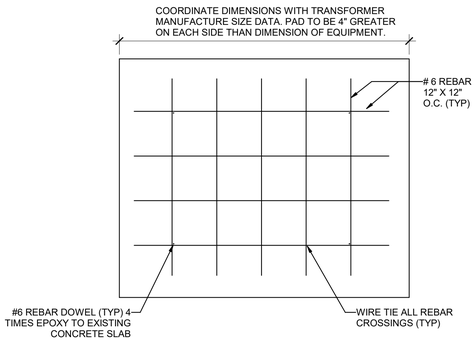

C1 EQUPMENT HOUSEKEEPING PAD
SCALE: NTS

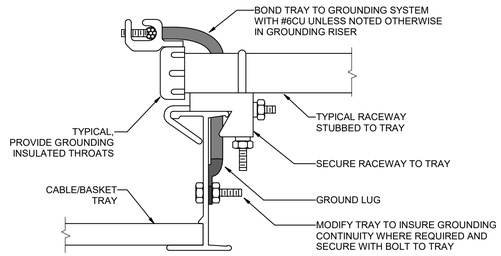

D2 RACEWAY TO TRAY DETAIL
SCALE: NTS

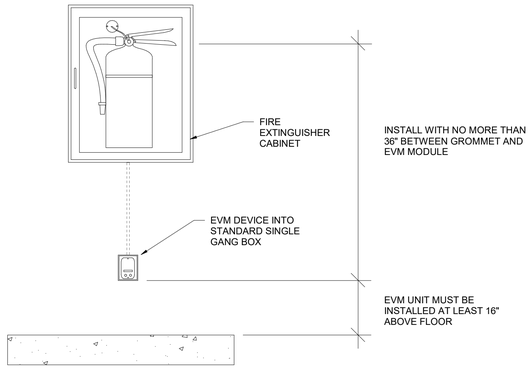

C2 TYPICAL FIRE EXTINGUISHER MONITOR
SCALE: NTS

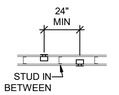

FOR LESS THAN 24" SEPERATION, PROVIDE LISTED SOUND AND FIRE PUTTY PADS

BOXES ON OPPOSITE SIDES OF WALL

C4 BOX MOUNTING DETAILS
SCALE: NTS

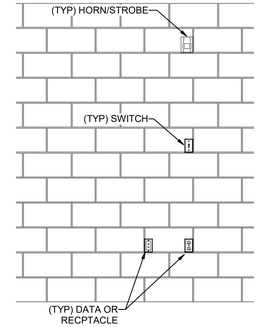

NOTE: ALL DEVICES SHALL BE INSTALLED AND LOCATED IN THE BLOCK CONSISENTLY THROUGH OUT THE BUILDING.

C5 CMU DEVICE MOUNTING ALIGNMENT DETAIL
SCALE: NTS



B4 TYPICAL ARC FLASH LABEL
SCALE: NTS

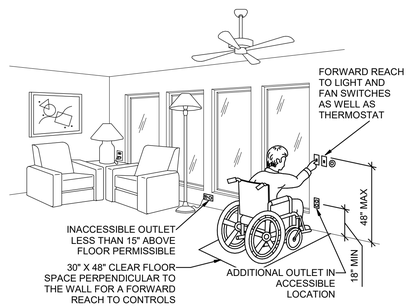

B1 ADA DETAIL
SCALE: NTS

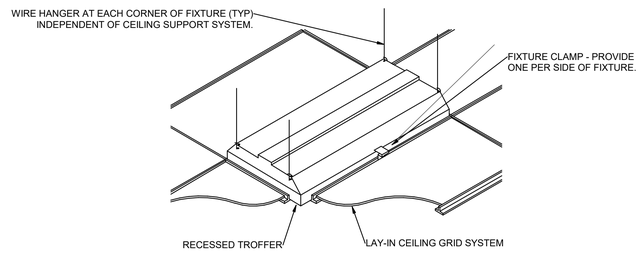

B2 RECESSED FIXTURE MOUNTING DETAIL
SCALE: NTS

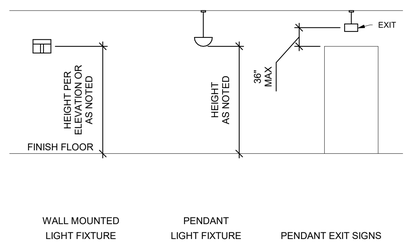

A1 LIGHTING MOUNTING DETAILS
SCALE: NTS

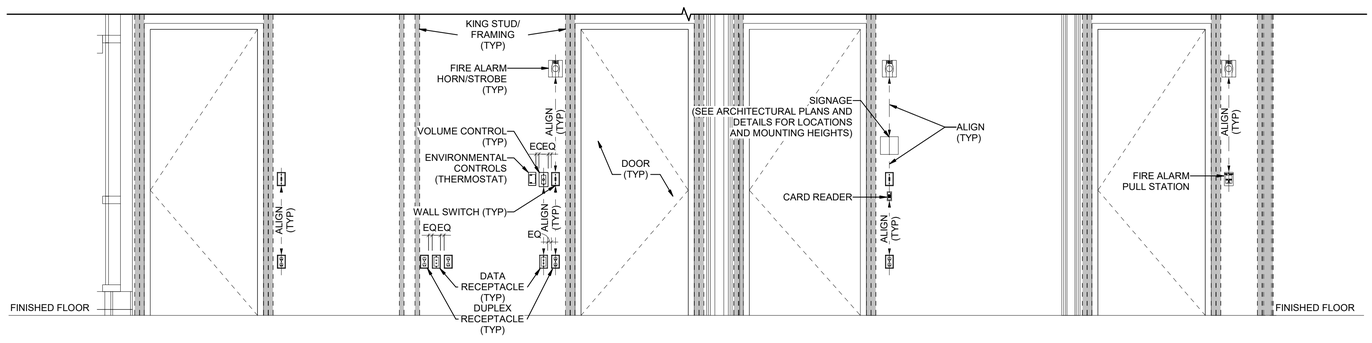

A2 TYPICAL WALL MOUNTED DEVICES ALIGNMENT DETAIL
SCALE: 1/2" = 1'-0"

ARCHITECT 1877
ajc architects
703 east 1700 south
salt lake city, utah 84105
ph: 801.466.8818
fx: 801.466.4411
www.ajcarchitects.com
LICENSED PROFESSIONAL ENGINEER No. 5497590-2202 Christopher Mark Kirkham STATE OF UTAH
10.01.21

CONSULTANT
SPECTRUM ENGINEERS
324 S. State St., Suite 400
Salt Lake City, UT 84111
800-678-7077
801-328-5151
fax: 801-328-5155
www.spectrum-engineers.com

OWNER INFORMATION

PROJECT DESCRIPTION

DUMKE GYMNASTICS TRAINING CENTER:

1825 E. SOUTH CAMPUS DRIVE
SALT LAKE CITY, UT 84112

AHJ STAMP

SHEET NAME:
TYPICAL DETAILS

REVISIONS

MARK	DATE	DESCRIPTION

ISSUE DATA

ISSUE DATE:	10.01.21
ISSUE TYPE:	CD
DRAWN BY:	IBC
CHECKED BY:	LSK
PROJECT#:	1877

SHEET NUMBER:
EE702

10/3/2021 1:34:39 PM C:\Users\ibc\Desktop\Revit Local Files\2020\20191093 ELEC Central_IBC-Spectrum.rvt

ALL IDEAS, DESIGNS, ARRANGEMENTS AND PLANS INDICATED OR REPRESENTED BY THIS DRAWING ARE OWNED BY AND THE PROPERTY OF AJC ARCHITECTS PC AND WERE CREATED, EVOLVED AND DEVELOPED FOR USE ON AND IN CONNECTION WITH THE SPECIFIED PROJECT. NONE OF THE IDEAS, DESIGNS, ARRANGEMENTS OR PLANS SHALL BE USED BY OR DISCLOSED TO ANY PERSON, FIRM OR CORPORATION FOR ANY PURPOSE WHATSOEVER WITHOUT WRITTEN CONSENT OF AJC ARCHITECTS PC. WRITTEN DIMENSIONS ON THESE DRAWINGS SHALL HAVE PRECEDENCE OVER SCALE DIMENSIONS. CONTRACTORS SHALL VERIFY AND BE RESPONSIBLE FOR ALL DIMENSIONS AND CONDITIONS ON THE JOB AND THIS OFFICE MUST BE NOTIFIED OF ANY VARIATION FROM THE DIMENSIONS AND CONDITIONS SHOWN BY THESE DRAWINGS. WARNING: REPRODUCTION HEREOF IS A CRIMINAL OFFENCE UNDER 18 U.S.C. SEC. 506. UNAUTHORIZED DISCLOSURE MAY CONSTITUTE TRADE SECRET MISAPPROPRIATION IN VIOLATION OF 12-24-311 ET. SEQ. AND OTHER LAWS.

1 | 2 | 3 | 4 | 5

D

C

B

A

1. LABEL TO BE PROVIDED AT EACH TRANSFORMER. LABEL IS TO BE SIZED APPROPRIATE, 1/16" THICK LAMINATED 2-PLY PLASTIC LAMACOID. LETTERS SHALL BE FORMED BY ENGRAVING OUTER WHITE PLY, EXPOSING BLACK PLY BENEATH.
2. LABEL IS TO BE MOUNTED USING DOUBLE SIDED ADHESIVE TAPE COVERING THE BACK OF THE LABEL.
3. FIRST LINE: LETTERING IS TO BE 3/8" HIGH, CENTERED, AND FORMATTED AS SHOWN. REPLACE THE LETTER/NUMBER WITH THOSE FOUND ON THE ONE-LINE DIAGRAM.
4. SECOND LINE: LETTERING IS TO BE 3/8" HIGH, CENTERED, AND FORMATTED AS SHOWN. REPLACE THE LETTER/NUMBER WITH THOSE FOUND ON THE ONE-LINE DIAGRAM.
5. THIRD LINE: LETTERING IS TO BE 3/8" HIGH, CENTERED, AND FORMATTED AS SHOWN. REPLACE WITH THE TRANSFORMERS VOLTAGE.
6. FOURTH LINE: LETTERING IS TO BE 3/8" HIGH, CENTERED, AND FORMATTED AS SHOWN. REPLACE WITH THE TRANSFORMERS KVA.
7. FIFTH LINE: LETTERING IS TO BE 3/8" HIGH, CENTERED, AND FORMATTED AS SHOWN. PROVIDE PANEL WHICH TRANSFORMER FEEDS.

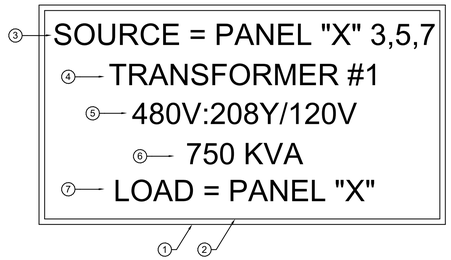

D1 TYPICAL STEP DOWN TRANSFORMER EQUIPMENT LABEL

SCALE: NTS

1. LABEL TO BE PROVIDED AT EACH SWITCHBOARD, PANELBOARD, DISCONNECT/STARTER. LABEL IS TO BE 3" X REQUIRED LENGTH X 1/16" LAMINATED 2-PLY PLASTIC LAMACOID. LETTERS SHALL BE FORMED BY ENGRAVING OUTER WHITE PLY, EXPOSING BLACK PLY BENEATH.
2. LABEL IS TO BE MOUNTED USING DOUBLE SIDED ADHESIVE TAPE COVERING THE BACK OF THE LABEL.
3. FIRST LINE: LETTERING IS TO BE 3/8" HIGH, CENTERED, AND FORMATTED AS SHOWN. REPLACE THE LETTER/NUMBER WITH THOSE FOUND ON THE ONE-LINE DIAGRAM.
4. SECOND LINE: LETTERING IS TO BE 3/8" HIGH, CENTERED, AND FORMATTED AS SHOWN. THE FOLLOWING SHALL BE PROVIDED, VOLTAGE, PHASE, NUMBER OF WIRES, AND AIC RATING OF DEVICE.
5. THIRD LINE: LETTERING IS TO BE 3/8" HIGH, CENTERED, AND FORMATTED AS SHOWN. PROVIDE "FED FROM-" AND REPLACE MDP1 WITH THE DEVICES NAME THAT FEEDS THE PANELBOARD.

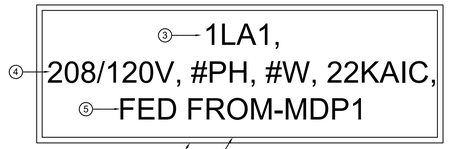

NOTE: EMERGENCY PANELS SHALL USE LAMACOID WITH RED OUTERPLY, EXPOSING WHITE LETTERING BENEATH. CONTRACTOR TO USE SAME LABEL SCHEME EXCEPT FIRST 'X' IS REPLACED WITH 'E' FOR EMERGENCY. SECOND 'X' TO BE 'L' FOR LOW OR 'H' FOR HIGH VOLTAGE (480/277V). LAST '#' TO BE REPLACED WITH LETTER INDICATING LOCATION OF PANEL.

D3 TYPICAL PANELBOARD / SWITCHBOARD / DISCONNECT / EQUIPMENT LABEL

SCALE: NTS

1. SWITCH AND RECEPTACLE LABEL TO BE PROVIDED AT EACH SWITCH OR RECEPTACLE. LABEL IS TO BE 1.5"W X .5"H. LABEL TO BE CLEAR WITH ADHESIVE ON THE BACK.
2. LETTERING IS TO BE .25" HIGH, CENTERED, AND FORMATTED AS SHOWN. FIRST SET OF SYSMBOLS CORRESPOND TO THE PANEL THE EQUIPMENT IS TIED TO, SEE TYPICAL PANELBOARD LABEL DETAIL. THIRD '#' IS TO IDENTIFY THE CIRCUIT BREAKER THE EQUIPMENT IS TIED TO.

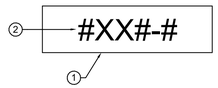

C2 TYPICAL SWITCH/RECEPTACLE LABEL

SCALE: NTS

1. PLABEL TO BE PROVIDED THAT IS TO BE 4" X REQUIRED LENGTH X 1/16" LAMINATED 2-PLY PLASTIC LAMACOID, LETTERS SHALL BE FORMED BY ENGRAVING OUTER WHITE PLY, EXPOSING BLACK PLY BENEATH.
2. LABEL IS TO BE MOUNTED USING DOUBLE SIDED ADHESIVE TAPE COVERING THE BACK OF THE LABEL.
3. FIRST LINE: LETTERING IS TO BE 3/8" HIGH, CENTERED, WITH THE EQUIPMENT ID MATCHING PLANS.
4. SECOND LINE: LETTERING IS TO BE 3/8" HIGH, CENTERED, AND FORMATTED AS SHOWN. THE FOLLOWING SHALL BE PROVIDED, VOLTAGE, PHASE, NUMBER OF WIRES, AND AIC RATING OF GEAR.
5. THIRD & FOURTH LINE: LETTERING IS TO BE 3/8" HIGH, CENTERED, AND FORMATTED AS SHOWN. LABEL WITH ACTUAL AVAILABLE FAULT CURRENT AND ASSOCIATED CLEARING TIME.

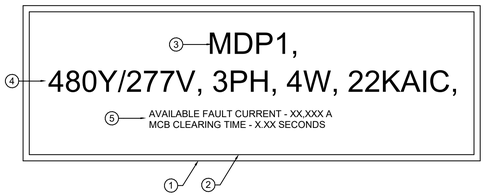

C3 TYPICAL MAIN SERVICE EQUIPMENT / GEAR LABEL

SCALE: NTS

*LABEL TO BE CENTERED IN EQUIPMENT, PREFERABLE ON FACE OF EQUIPMENT AND TOWARDS THE TOP.

**REFER TO TYPICAL SWITCH/RECEPTACLE LABELING DETAIL FOR LABEL REQUIRMENTS.

***DISPOSE OF AN EXISTING PANELBOARD NAME PLATES WHEN INSTALLING NEW NAME PLATES.

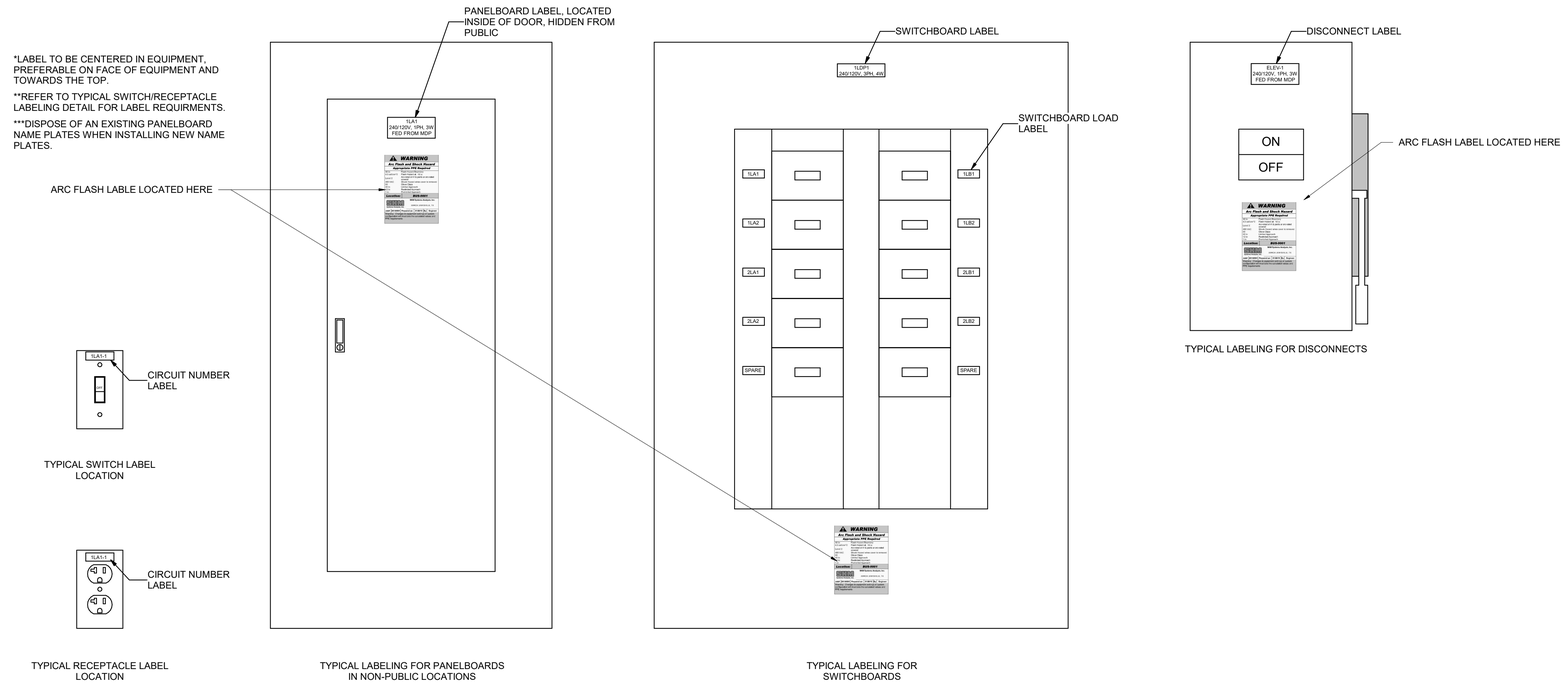

A2 TYPICAL SWITCH, RECEPTACLE AND PANELBOARD LABELING LOCATION DETAIL

SCALE: NTS

1 | 2 | 3 | 4 | 5

ARCHITECT 1877

ajc architects

703 east 1700 south
salt lake city, utah 84105
ph: 801.466.8818
fx: 801.466.4411
www.ajcarchitects.com

LICENSED PROFESSIONAL ENGINEER
No. 5497590-2202
Christopher Kirk Sorensen
STATE OF UTAH

10.01.21

CONSULTANT

SPECTRUM ENGINEERS

324 S. State St., Suite 400
Salt Lake City, UT 84111
800-678-7077
801-328-5151
fax: 801-328-5155
www.spectrum-engineers.com

OWNER INFORMATION

PROJECT DESCRIPTION

DUMKE GYMNASTICS TRAINING CENTER:

1825 E. SOUTH CAMPUS DRIVE
SALT LAKE CITY, UT 84112

AHJ STAMP

SHEET NAME:

TYPICAL LABLING DETAILS

REVISIONS

MARK	DATE	DESCRIPTION

ISSUE DATA

ISSUE DATE:	10.01.21
ISSUE TYPE:	CD
DRAWN BY:	IBC
CHECKED BY:	LSK
PROJECT#:	1877

SHEET NUMBER:

EE703

ALL IDEAS, DESIGNS, ARRANGEMENTS AND PLANS INDICATED OR REPRESENTED BY THIS DRAWING ARE OWNED BY AND THE PROPERTY OF AJC ARCHITECTS PC AND WERE CREATED, EVOLVED AND DEVELOPED FOR USE ON AND IN CONNECTION WITH THE SPECIFIED PROJECT. NONE OF THE IDEAS, DESIGNS, ARRANGEMENTS OR PLANS SHALL BE USED BY OR DISCLOSED TO ANY PERSON, FIRM OR CORPORATION FOR ANY PURPOSE WHATSOEVER WITHOUT WRITTEN CONSENT OF AJC ARCHITECTS PC. WRITTEN DIMENSIONS ON THESE DRAWINGS SHALL HAVE PRECEDENCE OVER SCALE DIMENSIONS. CONTRACTORS SHALL VERIFY AND BE RESPONSIBLE FOR ALL DIMENSIONS AND CONDITIONS ON THE JOB AND THIS OFFICE MUST BE NOTIFIED OF ANY VARIATION FROM THE DIMENSIONS AND CONDITIONS SHOWN BY THESE DRAWINGS. WARNING: REPRODUCTION HEREOF IS A CRIMINAL OFFENSE UNDER 18 U.S.C. SEC. 506. UNAUTHORIZED DISCLOSURE MAY CONSTITUTE TRADE SECRET MISAPPROPRIATION IN VIOLATION OF 17 U.S.C. § 1-212 ET. SEQ. AND OTHER LAWS.

10/3/2021 1:34:38 PM C:\Users\ibc\Desktop\Revit Local Files\2020\20191093 ELEC Central_IBC-Spectrum.rvt

GENERAL SHEET NOTES

1 UNLESS OTHERWISE INDICATED, REMOVE ALL LIGHTING FIXTURES, OUTLETS, DEVICES AND EQUIPMENT SHOWN IN DARK DASHED LINES. REMOVE ASSOCIATED CONDUIT AND WIRING BACK TO SOURCE. SYSTEMATICALLY CHECK EACH BRANCH PANELBOARD CIRCUIT TO VERIFY EACH CIRCUIT BREAKER NO LONGER HAS ANY ACTIVE LOADS, DISCONNECT THE WIRING AND TURN THE CIRCUIT BREAKER OFF. ANY REMAINING ACTIVE LOADS SHALL BE LABELED AT THE PANELBOARD AS TO WHAT LOAD IS SERVED.

2 ITEMS TO BE DEMOLISHED SHALL BE COORDINATED WITH OWNER FOR ANY ITEM OWNER WISHES TO SALVAGE, DELIVER TO OWNER UPON REQUEST AND DEMOLISH / DISPOSE OF ITEMS IN A LEGAL MANNER ANY ITEMS OWNER DOES NOT WANT SALVAGED.

3 REMOVE ALL ABANDONED RACEWAY, CONDUIT, WIRING AND CABLING WHETHER ABANDONED PREVIOUSLY TO THIS PROJECT OR AS A RESULT OF THIS PROJECT. NOT ALL ABANDONED ITEMS ARE SHOWN ON THESE PLANS AND FIELD VERIFICATION OF DEMOLITION SCOPE EXTENT IS REQUIRED.

4 PRIOR TO SUBMITTING BID, VISIT THE SITE AND FIELD VERIFY THE EXTENT OF ELECTRICAL DEMOLITION WORK TO MEET THE INTENT OF THE BID DOCUMENTS AND INCLUDE ALL COSTS IN BID.

5 PRIOR TO REMOVAL OF ANY ELECTRICAL EQUIPMENT OR WIRING, FIELD VERIFY THAT THE EQUIPMENT OR WIRING IS INACTIVE OR NO LONGER IN USE.

6 REMOVE ALL FIRE ALARM DEVICES WHERE EXISTING WALLS AND CEILINGS ARE BEING REMOVED, WITH ASSOCIATED CONDUIT AND WIRING. EXISTING FIRE ALARM DEVICES AND SYSTEM NOT INDICATED FOR REMOVAL SHALL REMAIN ACTIVE THROUGHOUT DEMOLITION AND CONSTRUCTION UNTIL THE NEW SYSTEM IS TESTED AND OPERATIONAL. MAINTAIN ALL CLASS A FIRE ALARM INITIATING AND INDICATING LOOPS WHERE EXISTING DEVICES ARE REMOVED.

SHEET KEYNOTES

1 DEMOLISH EXISTING FIRE ALARM PANEL ALONG WITH CABLING AND CONDUIT TO NEAREST DEVICE. PROTECT AND MAINTAIN EXISTING FIRE ALARM CIRCUITS/LOOPS TO BE INTERCEPTED AND EXTENDED TO NEW FIRE ALARM PANEL LOCATION.

2 DEMOLISH POWER FOR MECHANICAL EQUIPMENT.

3 PROTECT AND MAINTAIN ALL ELECTRICAL EQUIPMENT IN SPACE/ROOM UNLESS NOTED OTHERWISE.

4 PROTECT AND MAINTAIN EXISTING ELECTRICAL DEVICE. CONTRACTOR SHALL INTERCEPT EXISTING BRANCH CIRCUIT AND EXTEND IF REQUIRED FROM DEMOLITION OF OTHER DEVICES ON EXISTING CIRCUIT.

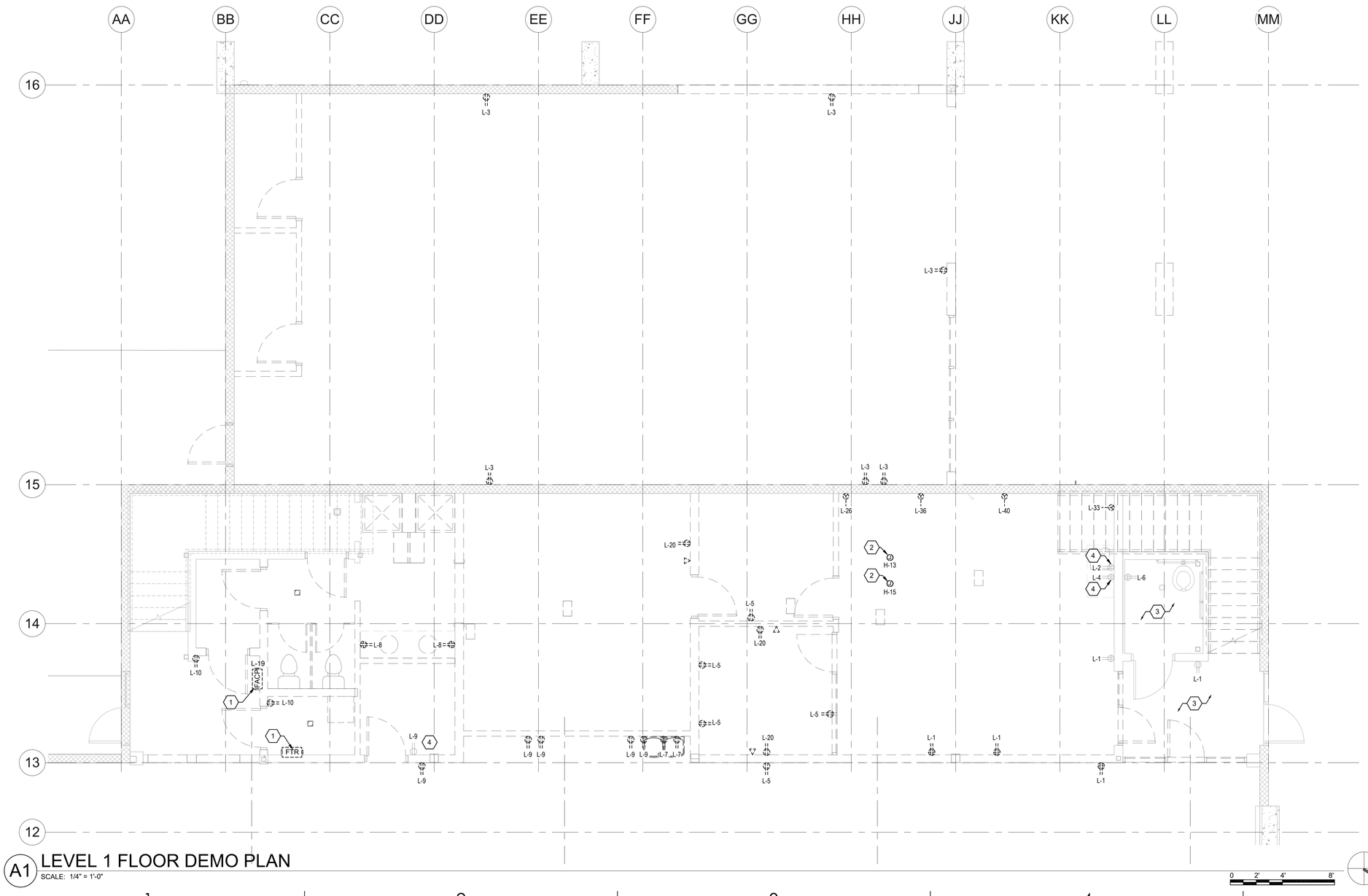

A1 LEVEL 1 FLOOR DEMO PLAN
SCALE: 1/4" = 1'-0"

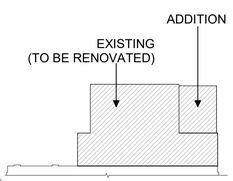

ARCHITECT 1877
ajc architects
703 east 1700 south
salt lake city, utah 84105
ph: 801.466.8818
fx: 801.466.4411
www.ajcarchitects.com
LICENSED PROFESSIONAL ENGINEER
No. 5497590-2202
Christopher Mark Kirkham
STATE OF UTAH
10.01.21

CONSULTANT
SPECTRUM ENGINEERS
324 S. State St., Suite 400
Salt Lake City, UT 84111
800-678-7077
801-328-5151
fax: 801-328-5155
www.spectrum-engineers.com

OWNER INFORMATION

PROJECT DESCRIPTION

DUMKE GYMNASTICS TRAINING CENTER:

1825 E. SOUTH CAMPUS DRIVE
SALT LAKE CITY, UT 84112

AHJ STAMP

SHEET NAME:
LEVEL 1 FLOOR DEMO PLAN

REVISIONS

MARK	DATE	DESCRIPTION

ISSUE DATA

ISSUE DATE:	10.01.21
ISSUE TYPE:	CD
DRAWN BY:	IBC
CHECKED BY:	LSK
PROJECT#:	1877

SHEET NUMBER:

ED101

ALL IDEAS, DESIGNS, ARRANGEMENTS AND PLANS INDICATED OR REPRESENTED BY THIS DRAWING ARE OWNED BY AND THE PROPERTY OF AJC ARCHITECTS PC AND WERE CREATED, EVOLVED, AND DEVELOPED FOR USE ON AND IN CONNECTION WITH THE SPECIFIED PROJECT. NONE OF THE IDEAS, DESIGNS, ARRANGEMENTS OR PLANS SHALL BE USED BY OR DISCLOSED TO ANY PERSON, FIRM, OR CORPORATION FOR ANY PURPOSE WHATSOEVER WITHOUT WRITTEN CONSENT OF AJC ARCHITECTS PC. WRITTEN DIMENSIONS ON THESE DRAWINGS SHALL HAVE PRECEDENCE OVER SCALE DIMENSIONS. CONTRACTORS SHALL VERIFY AND BE RESPONSIBLE FOR ALL DIMENSIONS AND CONDITIONS ON THE JOB AND THIS OFFICE MUST BE NOTIFIED OF ANY VARIATION FROM THE DIMENSIONS AND CONDITIONS SHOWN BY THESE DRAWINGS. WARNING: REPRODUCTION HEREOF IS A CRIMINAL OFFENSE UNDER 18 U.S.C. SEC. 506. UNAUTHORIZED DISCLOSURE MAY CONSTITUTE TRADE SECRET MISAPPROPRIATION IN VIOLATION OF CC-24-3.3-11 ET. SEQ. AND OTHER LAWS

10/3/2021 1:34:35 PM C:\Users\ibc\Desktop\Revit Local Files\2020\20191093 ELEC Central_IBC-Spectrum.rvt

GENERAL SHEET NOTES

1 UNLESS OTHERWISE INDICATED, REMOVE ALL LIGHTING FIXTURES, OUTLETS, DEVICES AND EQUIPMENT SHOWN IN DARK DASHED LINES. REMOVE ASSOCIATED CONDUIT AND WIRING BACK TO SOURCE. SYSTEMATICALLY CHECK EACH BRANCH PANELBOARD CIRCUIT TO VERIFY EACH CIRCUIT BREAKER NO LONGER HAS ANY ACTIVE LOADS, DISCONNECT THE WIRING AND TURN THE CIRCUIT BREAKER OFF. ANY REMAINING ACTIVE LOADS SHALL BE LABELED AT THE PANELBOARD AS TO WHAT LOAD IS SERVED.

2 ITEMS TO BE DEMOLISHED SHALL BE COORDINATED WITH OWNER FOR ANY ITEM OWNER WISHES TO SALVAGE, DELIVER TO OWNER UPON REQUEST AND DEMOLISH / DISPOSE OF ITEMS IN A LEGAL MANNER ANY ITEMS OWNER DOES NOT WANT SALVAGED.

3 REMOVE ALL ABANDONED RACEWAY, CONDUIT, WIRING AND CABLING WHETHER ABANDONED PREVIOUSLY TO THIS PROJECT OR AS A RESULT OF THIS PROJECT. NOT ALL ABANDONED ITEMS ARE SHOWN ON THESE PLANS AND FIELD VERIFICATION OF DEMOLITION SCOPE EXTENT IS REQUIRED.

4 PRIOR TO SUBMITTING BID, VISIT THE SITE AND FIELD VERIFY THE EXTENT OF ELECTRICAL DEMOLITION WORK TO MEET THE INTENT OF THE BID DOCUMENTS AND INCLUDE ALL COSTS IN BID.

5 PRIOR TO REMOVAL OF ANY ELECTRICAL EQUIPMENT OR WIRING, FIELD VERIFY THAT THE EQUIPMENT OR WIRING IS INACTIVE OR NO LONGER IN USE.

6 REMOVE ALL FIRE ALARM DEVICES WHERE EXISTING WALLS AND CEILINGS ARE BEING REMOVED, WITH ASSOCIATED CONDUIT AND WIRING. EXISTING FIRE ALARM DEVICES AND SYSTEM NOT INDICATED FOR REMOVAL SHALL REMAIN ACTIVE THROUGHOUT DEMOLITION AND CONSTRUCTION UNTIL THE NEW SYSTEM IS TESTED AND OPERATIONAL. MAINTAIN ALL CLASS A FIRE ALARM INITIATING AND INDICATING LOOPS WHERE EXISTING DEVICES ARE REMOVED.

SHEET KEYNOTES

1 DEMOLISH ABANDONED MULTIMODE NODE BACK TO KUED BUILDING. ALL OTHER ABANDONED IT OR A/V EQUIPMENT SHALL BE DEMOLISHED.

2 DEMOLISH EXISTING PATCH PANEL, EXTEND CABLING TO NEW PATCH PANEL. REFER TO NEW PLANS. PROTECT AND MAINTAIN EXISTING PLYWOOD.

3 DEMOLISH EXISTING POWER FEED FOR WATER HEATERS AND PUMP BACK TO SOURCE.

4 DEMOLISH EXISTING SECURITY PANEL. PROTECT AND MAINTAIN EXISTING POWER AND DATA CONNECTIONS FOR REUSE.

5 PROTECT AND MAINTAIN ALL ELECTRICAL EQUIPMENT IN SPACE/ROOM UNLESS NOTED OTHERWISE.

6 PROTECT AND MAINTAIN ELECTRICAL EQUIPMENT.

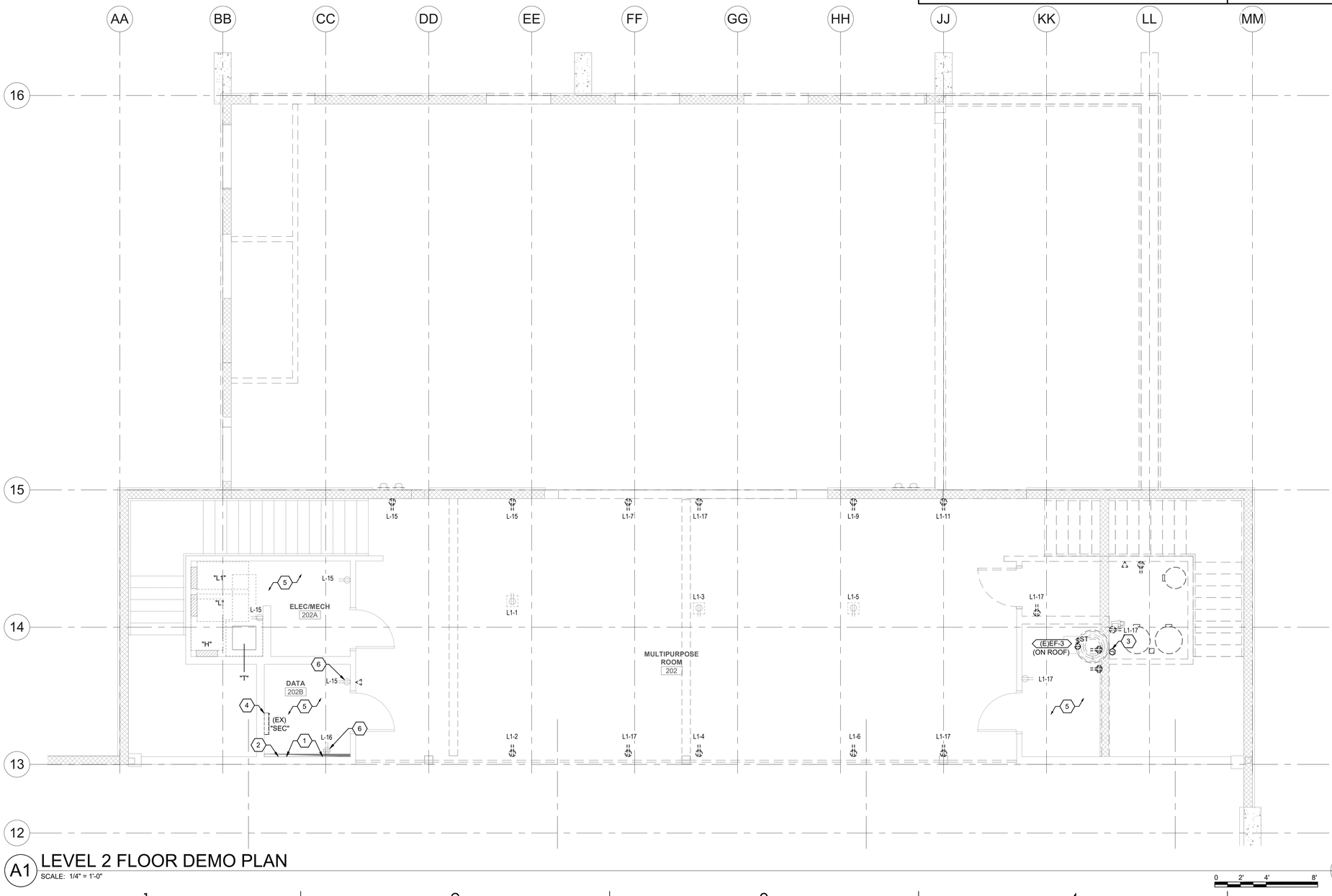

A1 LEVEL 2 FLOOR DEMO PLAN
SCALE: 1/4" = 1'-0"

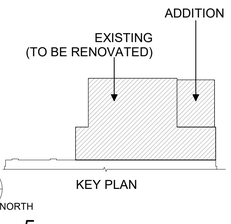

0 2' 4' 8'

ARCHITECT 1877
ajc architects
703 east 1700 south
salt lake city, utah 84105
ph: 801.466.8818
fx: 801.466.4411
www.ajcarchitects.com
LICENSED PROFESSIONAL ENGINEER
No. 5497590-2202
Christopher Mark Kopacki
STATE OF UTAH
10.01.21

CONSULTANT
SPECTRUM ENGINEERS
324 S. State St., Suite 400
Salt Lake City, UT 84111
800-678-7077
801-328-5151
fax: 801-328-5155
www.spectrum-engineers.com

OWNER INFORMATION

PROJECT DESCRIPTION

DUMKE GYMNASTICS TRAINING CENTER:

1825 E. SOUTH CAMPUS DRIVE
SALT LAKE CITY, UT 84112

AHJ STAMP

SHEET NAME:
LEVEL 2 FLOOR DEMO PLAN

REVISIONS

MARK	DATE	DESCRIPTION

ISSUE DATA

ISSUE DATE:	10.01.21
ISSUE TYPE:	CD
DRAWN BY:	IBC
CHECKED BY:	LSK
PROJECT#:	1877

SHEET NUMBER:

ED102

ALL IDEAS, DESIGNS, ARRANGEMENTS AND PLANS INDICATED OR REPRESENTED BY THIS DRAWING ARE OWNED BY AND THE PROPERTY OF AJC ARCHITECTS PC AND WERE PREPARED, EVOLVED AND DEVELOPED FOR USE ON AND IN CONNECTION WITH THE SPECIFIED PROJECT. NONE OF THE IDEAS, DESIGNS, ARRANGEMENTS OR PLANS SHALL BE USED BY OR DISCLOSED TO ANY PERSON, FIRM OR CORPORATION FOR ANY PURPOSE WHATSOEVER WITHOUT WRITTEN CONSENT OF AJC ARCHITECTS PC.
WRITTEN DIMENSIONS ON THESE DRAWINGS SHALL HAVE PRECEDENCE OVER SCALE DIMENSIONS. CONTRACTORS SHALL VERIFY AND BE RESPONSIBLE FOR ALL DIMENSIONS AND CONDITIONS ON THE JOB AND THIS OFFICE MUST BE NOTIFIED OF ANY VARIATION FROM THE DIMENSIONS AND CONDITIONS SHOWN BY THESE DRAWINGS. WARNING: REPRODUCTION HEREOF IS A CRIMINAL OFFENSE UNDER 18 U.S.C. SEC. 506. UNAUTHORIZED DISCLOSURE MAY CONSTITUTE TRADE SECRET
MISAPPROPRIATION IN VIOLATION OF 17-24-2-11 ET. SEQ. AND OTHER LAWS.

10/3/2021 1:34:32 PM C:\Users\ibc\Desktop\Revit Local Files\2020\20191093 ELEC Central_IBC-Spectrum.rvt

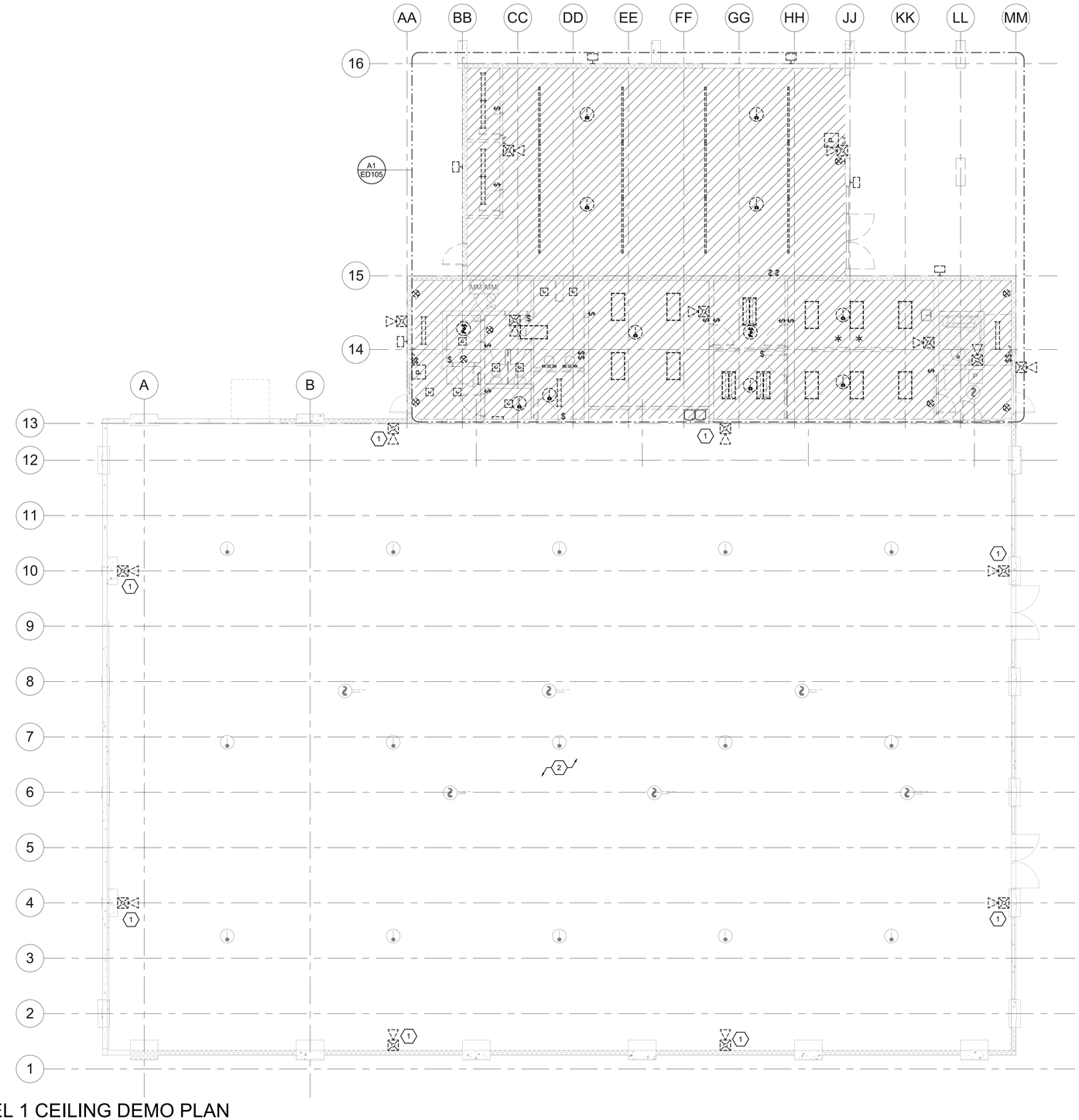

A1 LEVEL 1 CEILING DEMO PLAN
SCALE: 1/8" = 1'-0"

0 4' 8' 16'

NORTH

GENERAL SHEET NOTES

1 UNLESS OTHERWISE INDICATED, REMOVE ALL LIGHTING FIXTURES, OUTLETS, DEVICES AND EQUIPMENT SHOWN IN DARK DASHED LINES. REMOVE ASSOCIATED CONDUIT AND WIRING BACK TO SOURCE. SYSTEMATICALLY CHECK EACH BRANCH PANELBOARD CIRCUIT TO VERIFY EACH CIRCUIT BREAKER NO LONGER HAS ANY ACTIVE LOADS, DISCONNECT THE WIRING AND TURN THE CIRCUIT BREAKER OFF. ANY REMAINING ACTIVE LOADS SHALL BE LABELED AT THE PANELBOARD AS TO WHAT LOAD IS SERVED.

2 ITEMS TO BE DEMOLISHED SHALL BE COORDINATED WITH OWNER FOR ANY ITEM OWNER WISHES TO SALVAGE, DELIVER TO OWNER UPON REQUEST AND DEMOLISH / DISPOSE OF ITEMS IN A LEGAL MANNER ANY ITEMS OWNER DOES NOT WANT SALVAGED.

3 REMOVE ALL ABANDONED RACEWAY, CONDUIT, WIRING AND CABLING WHETHER ABANDONED PREVIOUSLY TO THIS PROJECT OR AS A RESULT OF THIS PROJECT. NOT ALL ABANDONED ITEMS ARE SHOWN ON THESE PLANS AND FIELD VERIFICATION OF DEMOLITION SCOPE EXTENT IS REQUIRED.

4 PRIOR TO SUBMITTING BID, VISIT THE SITE AND FIELD VERIFY THE EXTENT OF ELECTRICAL DEMOLITION WORK TO MEET THE INTENT OF THE BID DOCUMENTS AND INCLUDE ALL COSTS IN BID.

5 PRIOR TO REMOVAL OF ANY ELECTRICAL EQUIPMENT OR WIRING, FIELD VERIFY THAT THE EQUIPMENT OR WIRING IS INACTIVE OR NO LONGER IN USE.

6 REMOVE ALL FIRE ALARM DEVICES WHERE EXISTING WALLS AND CEILINGS ARE BEING REMOVED, WITH ASSOCIATED CONDUIT AND WIRING. EXISTING FIRE ALARM DEVICES AND SYSTEM NOT INDICATED FOR REMOVAL SHALL REMAIN ACTIVE THROUGHOUT DEMOLITION AND CONSTRUCTION UNTIL THE NEW SYSTEM IS TESTED AND OPERATIONAL. MAINTAIN ALL CLASS A FIRE ALARM INITIATING AND INDICATING LOOPS WHERE EXISTING DEVICES ARE REMOVED.

SHEET KEYNOTES

1 DEMOLISH EXISTING HORN/STROBE, PROTECT AND MAINTAIN EXISTING CABLING AND RACEWAY FOR RE-USE.

2 PROTECT AND MAINTAIN ALL ELECTRICAL EQUIPMENT IN SPACE/ROOM UNLESS NOTED OTHERWISE.

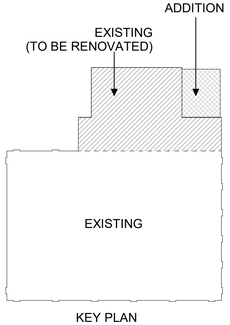

KEY PLAN

ARCHITECT 1877
ajc architects
703 east 1700 south
salt lake city, utah 84105
ph: 801.466.8818
fx: 801.466.4411
www.ajcarchitects.com
LICENSED PROFESSIONAL ENGINEER
No. 5497590-2202
Christopher Mark Kirk
STATE OF UTAH
10.01.21

CONSULTANT
SPECTRUM ENGINEERS
324 S. State St., Suite 400
Salt Lake City, UT 84111
800-678-7077
801-328-5151
fax: 801-328-5155
www.spectrum-engineers.com

OWNER INFORMATION

PROJECT DESCRIPTION

DUMKE GYMNASTICS TRAINING CENTER:

1825 E. SOUTH CAMPUS DRIVE
SALT LAKE CITY, UT 84112

AHJ STAMP

SHEET NAME:
LEVEL 1 RCP DEMO PLAN

REVISIONS

MARK	DATE	DESCRIPTION

ISSUE DATA

ISSUE DATE:	10.01.21
ISSUE TYPE:	CD
DRAWN BY:	IBC
CHECKED BY:	LSK
PROJECT#:	1877

SHEET NUMBER:

ED104

ALL IDEAS, DESIGNS, ARRANGEMENTS AND PLANS INDICATED OR REPRESENTED BY THIS DRAWING ARE OWNED BY AND THE PROPERTY OF AJC ARCHITECTS PC AND WERE CREATED, EVOLVED, AND DEVELOPED FOR USE ON AND IN CONNECTION WITH THE SPECIFIED PROJECT. NONE OF THE IDEAS, DESIGNS, ARRANGEMENTS OR PLANS SHALL BE USED BY OR DISCLOSED TO ANY PERSON, FIRM, OR CORPORATION FOR ANY PURPOSE WHATSOEVER WITHOUT WRITTEN CONSENT OF AJC ARCHITECTS PC. WRITTEN DIMENSIONS ON THESE DRAWINGS SHALL HAVE PRECEDENCE OVER SCALE DIMENSIONS. CONTRACTORS SHALL VERIFY AND BE RESPONSIBLE FOR ALL DIMENSIONS AND CONDITIONS ON THE JOB AND THIS OFFICE MUST BE NOTIFIED OF ANY VARIATION FROM THE DIMENSIONS AND CONDITIONS SHOWN BY THESE DRAWINGS. WARNING: REPRODUCTION HEREOF IS A CRIMINAL OFFENSE UNDER 18 U.S.C. SEC. 506. UNAUTHORIZED DISCLOSURE MAY CONSTITUTE TRADE SECRET MISAPPROPRIATION IN VIOLATION OF 17 C.F.R. 240.10b-5 T.E.T. SEC. 3 AND OTHER LAWS.

10/3/2021 1:34:28 PM C:\Users\ibo\Desktop\Revit Local Files\2020\20191093 ELEC Central_IBC-Spectrum.rvt

GENERAL SHEET NOTES

1 UNLESS OTHERWISE INDICATED, REMOVE ALL LIGHTING FIXTURES, OUTLETS, DEVICES AND EQUIPMENT SHOWN IN DARK DASHED LINES. REMOVE ASSOCIATED CONDUIT AND WIRING BACK TO SOURCE. SYSTEMATICALLY CHECK EACH BRANCH PANELBOARD CIRCUIT TO VERIFY EACH CIRCUIT BREAKER NO LONGER HAS ANY ACTIVE LOADS, DISCONNECT THE WIRING AND TURN THE CIRCUIT BREAKER OFF. ANY REMAINING ACTIVE LOADS SHALL BE LABELED AT THE PANELBOARD AS TO WHAT LOAD IS SERVED.

2 ITEMS TO BE DEMOLISHED SHALL BE COORDINATED WITH OWNER FOR ANY ITEM OWNER WISHES TO SALVAGE, DELIVER TO OWNER UPON REQUEST AND DEMOLISH / DISPOSE OF ITEMS IN A LEGAL MANNER ANY ITEMS OWNER DOES NOT WANT SALVAGED.

3 REMOVE ALL ABANDONED RACEWAY, CONDUIT, WIRING AND CABLING WHETHER ABANDONED PREVIOUSLY TO THIS PROJECT OR AS A RESULT OF THIS PROJECT. NOT ALL ABANDONED ITEMS ARE SHOWN ON THESE PLANS AND FIELD VERIFICATION OF DEMOLITION SCOPE EXTENT IS REQUIRED.

4 PRIOR TO SUBMITTING BID, VISIT THE SITE AND FIELD VERIFY THE EXTENT OF ELECTRICAL DEMOLITION WORK TO MEET THE INTENT OF THE BID DOCUMENTS AND INCLUDE ALL COSTS IN BID.

5 PRIOR TO REMOVAL OF ANY ELECTRICAL EQUIPMENT OR WIRING, FIELD VERIFY THAT THE EQUIPMENT OR WIRING IS INACTIVE OR NO LONGER IN USE.

6 REMOVE ALL FIRE ALARM DEVICES WHERE EXISTING WALLS AND CEILINGS ARE BEING REMOVED, WITH ASSOCIATED CONDUIT AND WIRING. EXISTING FIRE ALARM DEVICES AND SYSTEM NOT INDICATED FOR REMOVAL SHALL REMAIN ACTIVE THROUGHOUT DEMOLITION AND CONSTRUCTION UNTIL THE NEW SYSTEM IS TESTED AND OPERATIONAL. MAINTAIN ALL CLASS A FIRE ALARM INITIATING AND INDICATING LOOPS WHERE EXISTING DEVICES ARE REMOVED.

SHEET KEYNOTES

1 DEMOLISH EXISTING HORN/STROBE, PROTECT AND MAINTAIN EXISTING CABLING AND RACEWAY FOR RE-USE.

2 SALVAGE AND RETURN TO OWNERS STOCK PILE.

3 SALVAGE FOR RE-USE. REFER TO NEW PLANS.

4 PROTECT AND MAINTAIN ALL ELECTRICAL EQUIPMENT IN SPACE/ROOM UNLESS NOTED OTHERWISE.

5 SALVAGE EXISTING PIR SENSOR FOR RE-USE, REFER TO NEW PLANS FOR ADDITIONAL INFORMATION.

6 SALVAGE EXISTING ULTRASONIC SENSOR FOR RE-USE, REFER TO NEW PLANS FOR ADDITIONAL INFORMATION.

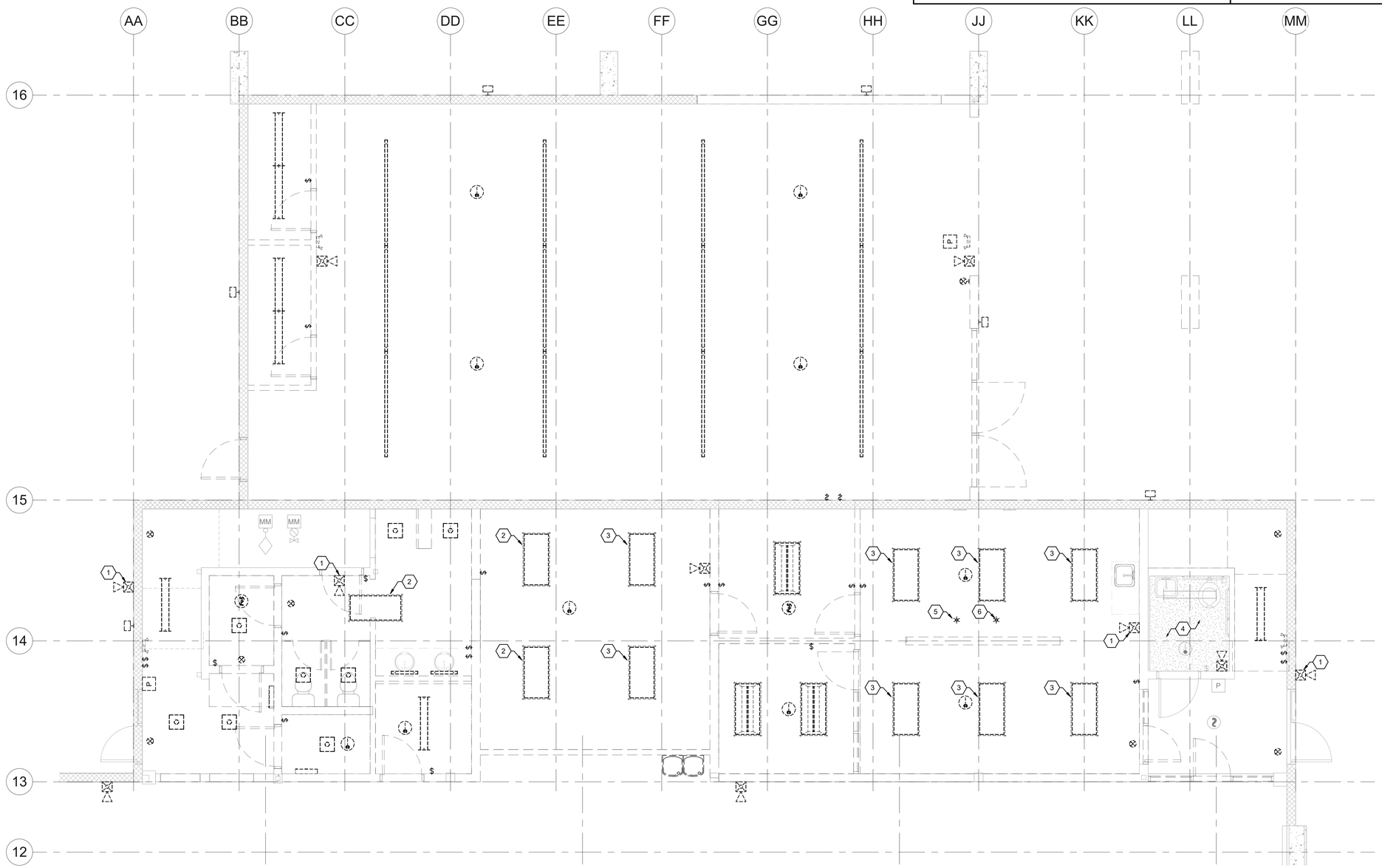

A1 ENLARGED LEVEL 1 CEILING DEMO PLAN
SCALE: 1/4" = 1'-0"

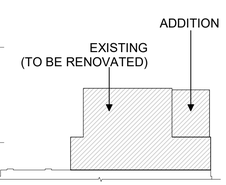

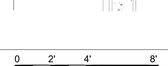

ARCHITECT 1877
ajc architects
703 east 1700 south
salt lake city, utah 84105
ph: 801.466.8818
fx: 801.466.4411
www.ajcarchitects.com

LICENSED PROFESSIONAL ENGINEER
No. 5497590-2202
Christopher Mark Kirkham
STATE OF UTAH

10.01.21

CONSULTANT

SPECTRUM ENGINEERS
324 S. State St., Suite 400
Salt Lake City, UT 84111
800-678-7077
801-328-5151
fax: 801-328-5155
www.spectrum-engineers.com

OWNER INFORMATION

PROJECT DESCRIPTION

DUMKE GYMNASTICS TRAINING CENTER:

1825 E. SOUTH CAMPUS DRIVE
SALT LAKE CITY, UT 84112

AHJ STAMP

SHEET NAME:
ENLARGED LEVEL 1 RCP DEMO PLAN

REVISIONS

MARK	DATE	DESCRIPTION

ISSUE DATA

ISSUE DATE:	10.01.21
ISSUE TYPE:	CD
DRAWN BY:	IBC
CHECKED BY:	LSK
PROJECT#:	1877

SHEET NUMBER:

ED105

ALL IDEAS, DESIGNS, ARRANGEMENTS AND PLANS INDICATED OR REPRESENTED BY THIS DRAWING ARE OWNED BY AND THE PROPERTY OF AJC ARCHITECTS PC, AND WERE CREATED, EVOLVED, AND DISCLOSED FOR USE ON AND IN CONNECTION WITH THE SPECIFIED PROJECT. NONE OF THE IDEAS, DESIGNS, ARRANGEMENTS OR PLANS SHALL BE USED BY OR DISCLOSED TO ANY PERSON, FIRM, OR CORPORATION FOR ANY PURPOSE WHATSOEVER WITHOUT WRITTEN CONSENT OF AJC ARCHITECTS PC. WRITTEN DIMENSIONS ON THESE DRAWINGS SHALL HAVE PRECEDENCE OVER SCALE DIMENSIONS. CONTRACTORS SHALL VERIFY AND BE RESPONSIBLE FOR ALL DIMENSIONS AND CONDITIONS ON THE JOB AND THIS OFFICE MUST BE NOTIFIED OF ANY VARIATION FROM THE DIMENSIONS AND CONDITIONS SHOWN BY THESE DRAWINGS. WARNING: REPRODUCTION HEREOF IS A CRIMINAL OFFENSE UNDER 18 U.S.C. SEC. 506. UNAUTHORIZED DISCLOSURE MAY CONSTITUTE TRADE SECRET MISAPPROPRIATION IN VIOLATION OF 17 C.F.R. 240.10b-5 ET. SEQ. AND OTHER LAWS.

10/3/2021 1:34:25 PM C:\Users\lbc\Desktop\Revit Local Files\2020\20191093 ELEC Central_IBC-Spectrum.rvt

GENERAL SHEET NOTES

1 UNLESS OTHERWISE INDICATED, REMOVE ALL LIGHTING FIXTURES, OUTLETS, DEVICES AND EQUIPMENT SHOWN IN DARK DASHED LINES. REMOVE ASSOCIATED CONDUIT AND WIRING BACK TO SOURCE. SYSTEMATICALLY CHECK EACH BRANCH PANELBOARD CIRCUIT TO VERIFY EACH CIRCUIT BREAKER NO LONGER HAS ANY ACTIVE LOADS, DISCONNECT THE WIRING AND TURN THE CIRCUIT BREAKER OFF. ANY REMAINING ACTIVE LOADS SHALL BE LABELED AT THE PANELBOARD AS TO WHAT LOAD IS SERVED.

2 ITEMS TO BE DEMOLISHED SHALL BE COORDINATED WITH OWNER FOR ANY ITEM OWNER WISHES TO SALVAGE, DELIVER TO OWNER UPON REQUEST AND DEMOLISH / DISPOSE OF ITEMS IN A LEGAL MANNER ANY ITEMS OWNER DOES NOT WANT SALVAGED.

3 REMOVE ALL ABANDONED RACEWAY, CONDUIT, WIRING AND CABLING WHETHER ABANDONED PREVIOUSLY TO THIS PROJECT OR AS A RESULT OF THIS PROJECT. NOT ALL ABANDONED ITEMS ARE SHOWN ON THESE PLANS AND FIELD VERIFICATION OF DEMOLITION SCOPE EXTENT IS REQUIRED.

4 PRIOR TO SUBMITTING BID, VISIT THE SITE AND FIELD VERIFY THE EXTENT OF ELECTRICAL DEMOLITION WORK TO MEET THE INTENT OF THE BID DOCUMENTS AND INCLUDE ALL COSTS IN BID.

5 PRIOR TO REMOVAL OF ANY ELECTRICAL EQUIPMENT OR WIRING, FIELD VERIFY THAT THE EQUIPMENT OR WIRING IS INACTIVE OR NO LONGER IN USE.

6 REMOVE ALL FIRE ALARM DEVICES WHERE EXISTING WALLS AND CEILINGS ARE BEING REMOVED, WITH ASSOCIATED CONDUIT AND WIRING. EXISTING FIRE ALARM DEVICES AND SYSTEM NOT INDICATED FOR REMOVAL SHALL REMAIN ACTIVE THROUGHOUT DEMOLITION AND CONSTRUCTION UNTIL THE NEW SYSTEM IS TESTED AND OPERATIONAL. MAINTAIN ALL CLASS A FIRE ALARM INITIATING AND INDICATING LOOPS WHERE EXISTING DEVICES ARE REMOVED.

SHEET KEYNOTES

1 DEMOLISH EXISTING HORN/STROBE, PROTECT AND MAINTAIN EXISTING CABLING AND RACEWAY FOR RE-USE.

2 EXISTING CIRCUITING SHOWN, REFER TO NEW LIGHTING PLANS FOR CONTINUATION.

3 PROTECT AND MAINTAIN ALL ELECTRICAL EQUIPMENT IN SPACE/ROOM UNLESS NOTED OTHERWISE.

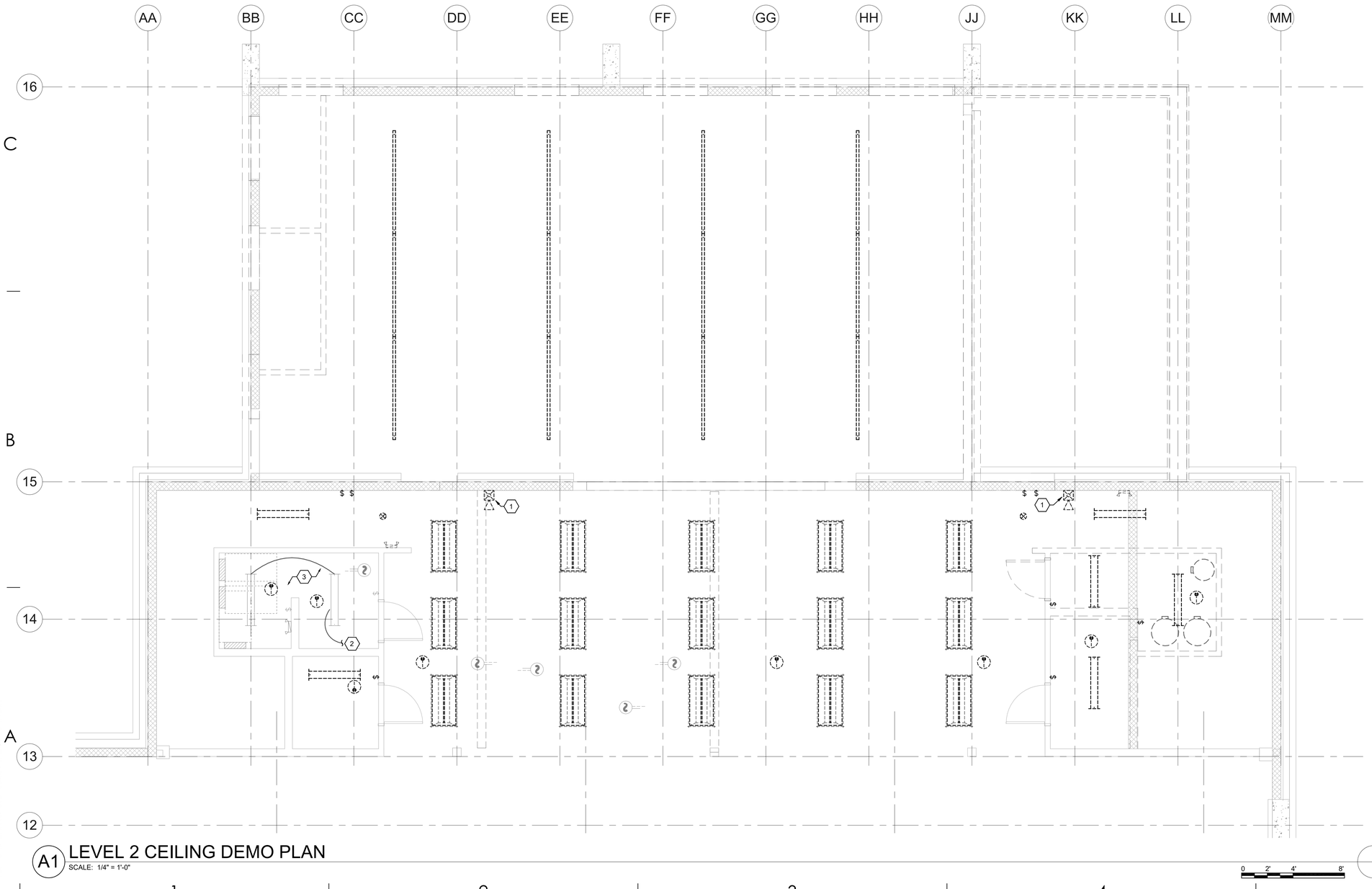

A1 LEVEL 2 CEILING DEMO PLAN
SCALE: 1/4" = 1'-0"

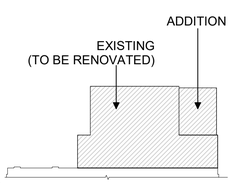

ARCHITECT 1877
ajc architects
703 east 1700 south
salt lake city, utah 84105
ph: 801.466.8818
fx: 801.466.4411
www.ajcarchitects.com
LICENSED PROFESSIONAL ENGINEER
No. 5497590-2202
Christopher Mark Kirkham
STATE OF UTAH
10.01.21

CONSULTANT
SPECTRUM ENGINEERS
324 S. State St., Suite 400
Salt Lake City, UT 84111
800-678-7077
801-328-5151
fax: 801-328-5155
www.spectrum-engineers.com

OWNER INFORMATION

PROJECT DESCRIPTION

DUMKE GYMNASTICS TRAINING CENTER:

1825 E. SOUTH CAMPUS DRIVE
SALT LAKE CITY, UT 84112

AHJ STAMP

SHEET NAME:
LEVEL 2 RCP DEMO PLAN

REVISIONS

MARK	DATE	DESCRIPTION

ISSUE DATA

ISSUE DATE:	10.01.21
ISSUE TYPE:	CD
DRAWN BY:	IBC
CHECKED BY:	LSK
PROJECT#:	1877

SHEET NUMBER:

ED106

ALL IDEAS, DESIGNS, ARRANGEMENTS AND PLANS INDICATED OR REPRESENTED BY THIS DRAWING ARE OWNED BY AND THE PROPERTY OF AJC ARCHITECTS PC AND WERE CREATED, EVOLVED, AND DEVELOPED FOR USE ON, AND IN CONNECTION WITH THE SPECIFIED PROJECT. NONE OF THE IDEAS, DESIGNS, ARRANGEMENTS OR PLANS SHALL BE USED BY OR DISCLOSED TO ANY PERSON, FIRM, OR CORPORATION FOR ANY PURPOSE WHATSOEVER WITHOUT WRITTEN CONSENT OF AJC ARCHITECTS PC. WRITTEN DIMENSIONS ON THESE DRAWINGS SHALL HAVE PRECEDENCE OVER SCALE DIMENSIONS. CONTRACTORS SHALL VERIFY AND BE RESPONSIBLE FOR ALL DIMENSIONS AND CONDITIONS ON THE JOB, AND THIS OFFICE MUST BE NOTIFIED OF ANY VARIATION FROM THE DIMENSIONS AND CONDITIONS SHOWN BY THESE DRAWINGS. WARNING: REPRODUCTION HEREOF IS A CRIMINAL OFFENSE UNDER 18 U.S.C. SEC. 506. UNAUTHORIZED DISCLOSURE MAY CONSTITUTE TRADE SECRET MISAPPROPRIATION IN VIOLATION OF C.2A-2-311 ET. SEQ. AND OTHER LAWS.

10/3/2021 1:34:22 PM C:\Users\lbc\Desktop\Revit Local Files\2020\20191093 ELEC Central_IBC-Spectrum.rvt

GENERAL SHEET NOTES

1 UNLESS NOTED OTHERWISE, ELECTRICAL ITEMS SHOWN IN DARK AND SOLID LINES ARE NEW AND THE CONTRACTOR SHALL PROVIDE THEM. ITEMS SHOWN IN SOLID LIGHT LINES ARE TO REMAIN.

2 INDICATED LOCATION OF MECHANICAL EQUIPMENT IS APPROXIMATE AND PROVIDED BY OTHERS. COORDINATE EXACT LOCATIONS OF ALL MECHANICAL EQUIPMENT WITH MECHANICAL CONTRACTOR PRIOR TO ROUGH-IN.

3 CONTRACTOR SHALL UPDATE ALL NEW AND EXISTING PANEL SCHEDULES WITH NEW CIRCUIT DATA. SCHEDULE SHALL BE ON A CARD STOCK TYPE OF MATERIAL AND TYPED WITH THE UPDATED INFORMATION.

4 TYPICAL FOR ALL OPEN TO STRUCTURE CEILING AREAS - POWER CABLING AND CONTROLS CABLING SHALL BE INSTALLED IN CONDUIT IN A NEAT AND PROFESSIONAL MANNER, PARALLEL AND PERPENDICULAR TO STRUCTURE WITH CONDUIT UP IN STUCTURE AND PAINTED TO MATCH SURFACE. ALL LOW VOLTAGE CABLING SHALL BE INSTALLED IN TRAY OR CONDUIT. INSTALLATION SHALL COMPLY WITH NECA STANDARDS.

5 PROVIDE BLANK FACEPLATES AT ALL LOCATIONS WHERE DEVICES WERE DEMOLISHED BUT RACEWAY WAS LEFT TO REMAIN AND NO NEW DEVICES ARE BEING INSTALLED AT THAT LOCATION.

6 REFER TO EE701 FOR TYPICAL MOUNTING AND ALIGNMENT OF ELECTRICAL DEVICES.

7 LOCATE ALL EQUIPMENT DISCONNECTS IN ACCESSIBLE LOCATION ADJACENT TO EQUIPMENT AND POSITIONED TO COMPLY WITH NEC WORK SPACE CLEARANCES.

8 COORDINATE EXACT LOCATIONS OF FLOORBOXES AND POKE THROUGH DEVICES WITH ARCHITECT AND BUILDING STRUCTURAL ELEMENTS PRIOR TO INSTALLATION AND ROUGH-IN.

9 ALL EXPOSED RACEWAYS LOCATED IN LABS SHALL BE ROUTED HORIZONTALLY 8FT OR HIGHER UNLESS NOTED OTHERWISE.

10 ALL PATHWAYS FOR LOW VOLTAGE CABLING NOT REQUIRED TO BE IN CONDUITS SHALL BE ROUTED IN J-HOOK PATHWAYS. CONCEAL ALL PATHWAYS ABOVE ACCESSIBLE CEILING SPACES. DO NOT RUN CABLES IN EXPOSED AREAS. WHERE CONCEALMENT IS NOT POSSIBLE IN EXPOSED AREAS, CONTRACTOR SHALL PROVIDE CONDUIT TO ROUTE CABLING WHERE VISIBLE. ALL CONDUIT SHALL BE PAINED TO MATCH CEILING AND PROVIDED WITH PROTECTIVE BUSHINGS.

11 REFER TO EY SHEETS TO ADDITIONAL SECURITY CAMERA DROP LOCATIONS.

SHEET KEYNOTES

1 TO ELEVATOR SHAFT LIGHT FIXTURE. SEE ASSOCIATED LIGHTING SHEET FOR CONTINUATION.

2 MOUNT RECEPTACLE IN COLUMN.

3 PROVIDE AS PART OF ADD ALTERNATE #4.

4 PROVIDE AS PART OF BASE BID.

5 PRIOR TO ROUGH-IN COORDINATE ALL ELECTRICAL CONNECTIONS WITH MILLWORK.

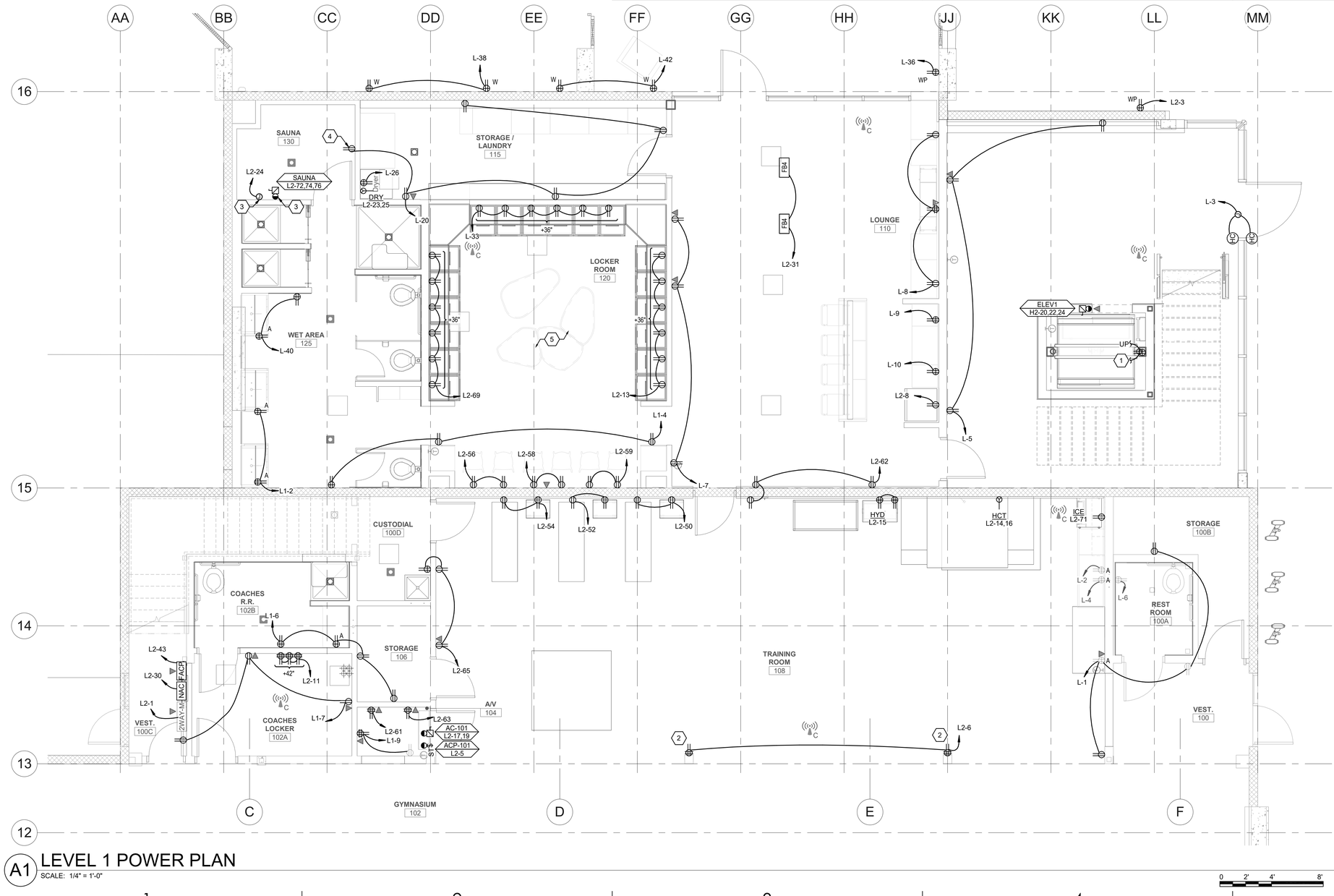

A1 LEVEL 1 POWER PLAN

SCALE: 1/4" = 1'-0"

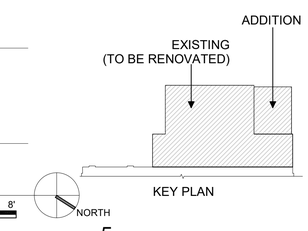

ARCHITECT 1877

ajc architects
703 east 1700 south
salt lake city, utah 84105
ph: 801.466.8818
fx: 801.466.4411
www.ajcarchitects.com

LICENSED PROFESSIONAL ENGINEER No. 5497590-2202 Christopher Michael Kapcsandi STATE OF UTAH

10.01.21

CONSULTANT

SPECTRUM ENGINEERS
324 S. State St., Suite 400
Salt Lake City, UT 84111
800-678-7077
801-328-5151
fax: 801-328-5155
www.spectrum-engineers.com

OWNER INFORMATION

PROJECT DESCRIPTION

DUMKE GYMNASTICS TRAINING CENTER:

1825 E. SOUTH CAMPUS DRIVE
SALT LAKE CITY, UT 84112

AHJ STAMP

SHEET NAME:
LEVEL 1 POWER PLAN

REVISIONS

MARK	DATE	DESCRIPTION

ISSUE DATA

ISSUE DATE:	10.01.21
ISSUE TYPE:	CD
DRAWN BY:	IBC
CHECKED BY:	LSK
PROJECT#:	1877

SHEET NUMBER:

EP101

ALL IDEAS, DESIGNS, ARRANGEMENTS AND PLANS INDICATED OR REPRESENTED BY THIS DRAWING ARE OWNED BY AND THE PROPERTY OF AJC ARCHITECTS PC AND WERE CREATED, EVOLVED, AND DEVELOPED FOR USE ON AND IN CONNECTION WITH THE SPECIFIED PROJECT. NONE OF SUCH IDEAS, DESIGNS, ARRANGEMENTS OR PLANS SHALL BE USED BY OR DISCLOSED TO ANY PERSON, FIRM, OR CORPORATION FOR ANY PURPOSE WHATSOEVER WITHOUT WRITTEN CONSENT OF AJC ARCHITECTS PC. WRITTEN DIMENSIONS ON THESE DRAWINGS SHALL HAVE PRECEDENCE OVER SCALE DIMENSIONS. CONTRACTORS SHALL VERIFY AND BE RESPONSIBLE FOR ALL DIMENSIONS AND CONDITIONS ON THE JOB AND THIS OFFICE MUST BE NOTIFIED OF ANY VARIATION FROM THE DIMENSIONS AND CONDITIONS SHOWN BY THESE DRAWINGS. WARNING: REPRODUCTION HEREOF IS A CRIMINAL OFFENSE UNDER 18 U.S.C. SEC. 506. UNAUTHORIZED DISCLOSURE MAY CONSTITUTE TRADE SECRET MISAPPROPRIATION IN VIOLATION OF 1 C.J.34-2-31-1 ET. SEQ. AND OTHER LAWS.

10/3/2021 1:34:18 PM C:\Users\ljbc\Desktop\Revit Local Files\202020191093 ELEC Central_IBC-Spectrum.rvt



D1 PANELBOARD "H" IMAGE
SCALE: NTS

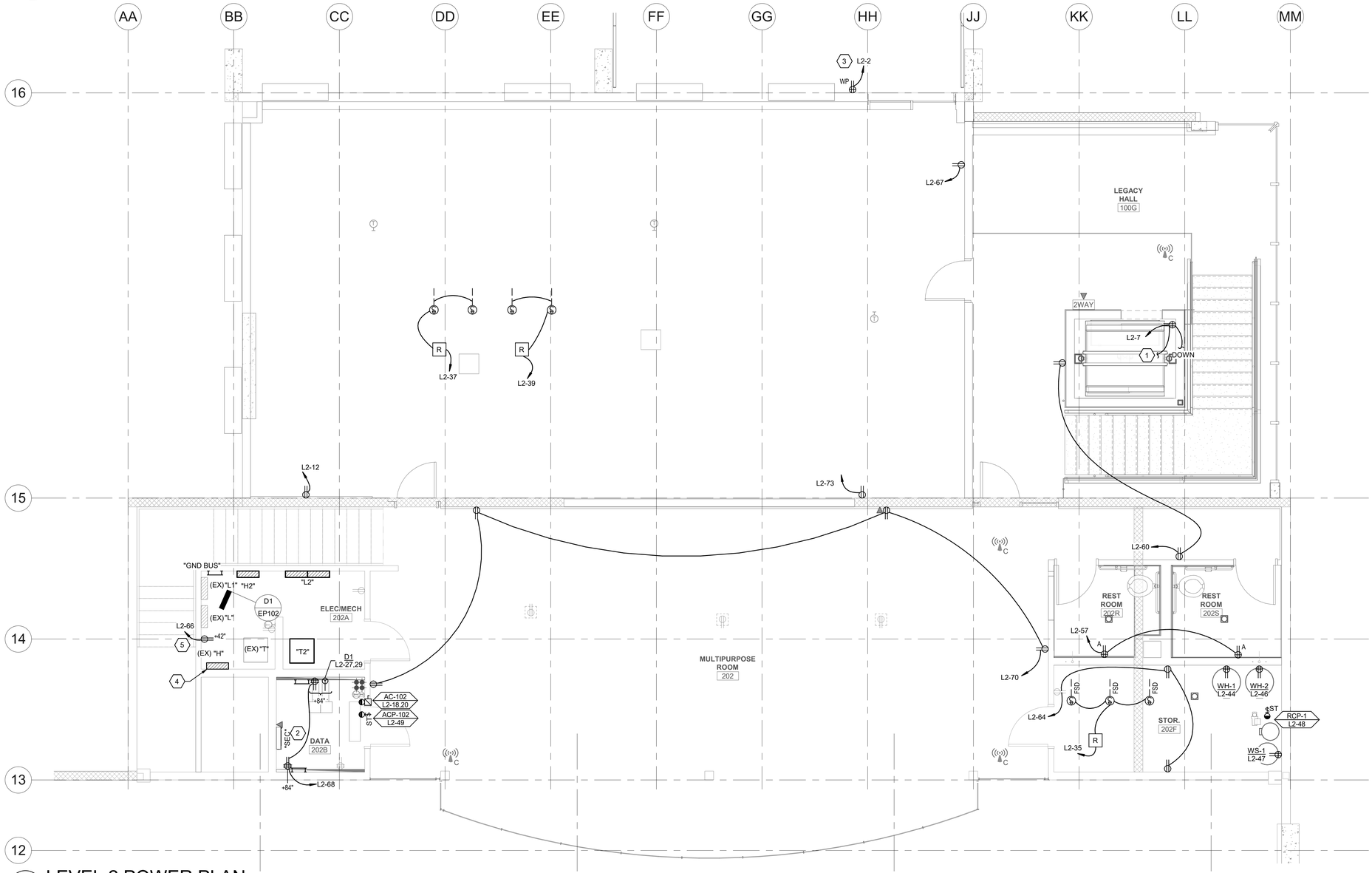

A1 LEVEL 2 POWER PLAN
SCALE: 1/4" = 1'-0"

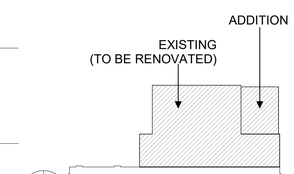

0 2' 4' 8'

NORTH

GENERAL SHEET NOTES

1 UNLESS NOTED OTHERWISE, ELECTRICAL ITEMS SHOWN IN DARK AND SOLID LINES ARE NEW AND THE CONTRACTOR SHALL PROVIDE THEM. ITEMS SHOWN IN SOLID LIGHT LINES ARE TO REMAIN.

2 INDICATED LOCATION OF MECHANICAL EQUIPMENT IS APPROXIMATE AND PROVIDED BY OTHERS. COORDINATE EXACT LOCATIONS OF ALL MECHANICAL EQUIPMENT WITH MECHANICAL CONTRACTOR PRIOR TO ROUGH-IN.

3 CONTRACTOR SHALL UPDATE ALL NEW AND EXISTING PANEL SCHEDULES WITH NEW CIRCUIT DATA. SCHEDULE SHALL BE ON A CARD STOCK TYPE OF MATERIAL AND TYPED WITH THE UPDATED INFORMATION.

4 TYPICAL FOR ALL OPEN TO STRUCTURE CEILING AREAS - POWER CABLING AND CONTROLS CABLING SHALL BE INSTALLED IN CONDUIT IN A NEAT AND PROFESSIONAL MANNER, PARALLEL AND PERPENDICULAR TO STRUCTURE WITH CONDUIT UP IN STUCTURE AND PAINTED TO MATCH SURFACE. ALL LOW VOLTAGE CABLING SHALL BE INSTALLED IN TRAY OR CONDUIT. INSTALLATION SHALL COMPLY WITH NECA STANDARDS.

5 PROVIDE BLANK FACEPLATES AT ALL LOCATIONS WHERE DEVICES WERE DEMOLISHED BUT RACEWAY WAS LEFT TO REMAIN AND NO NEW DEVICES ARE BEING INSTALLED AT THAT LOCATION.

6 REFER TO EE701 FOR TYPICAL MOUNTING AND ALIGNMENT OF ELECTRICAL DEVICES.

7 LOCATE ALL EQUIPMENT DISCONNECTS IN ACCESSIBLE LOCATION ADJACENT TO EQUIPMENT AND POSITIONED TO COMPLY WITH NEC WORK SPACE CLEARANCES.

8 COORDINATE EXACT LOCATIONS OF FLOORBOXES AND POKE THROUGH DEVICES WITH ARCHITECT AND BUILDING STRUCTURAL ELEMENTS PRIOR TO INSTALLATION AND ROUGH-IN.

9 ALL EXPOSED RACEWAYS LOCATED IN LABS SHALL BE ROUTED HORIZONTALLY 8FT OR HIGHER UNLESS NOTED OTHERWISE.

10 ALL PATHWAYS FOR LOW VOLTAGE CABLING NOT REQUIRED TO BE IN CONDUITS SHALL BE ROUTED IN J-HOOK PATHWAYS. CONCEAL ALL PATHWAYS ABOVE ACCESSIBLE CEILING SPACES. DO NOT RUN CABLES IN EXPOSED AREAS. WHERE CONCEALMENT IS NOT POSSIBLE IN EXPOSED AREAS, CONTRACTOR SHALL PROVIDE CONDUIT TO ROUTE CABLING WHERE VISIBLE. ALL CONDUIT SHALL BE PAINED TO MATCH CEILING AND PROVIDED WITH PROTECTIVE BUSHINGS.

11 REFER TO EY SHEETS TO ADDITIONAL SECURITY CAMERA DROP LOCATIONS.

SHEET KEYNOTES

1 TO ELEVATOR SHAFT LIGHT FIXTURE. SEE ASSOCIATED LIGHTING SHEET FOR CONTINUATION.

2 CONNECT NEW SECURITY PANEL TO EXISTING CIRCUIT.

3 PROVIDE AS PART OF ADD ALTERNATE #2.

4 PROVIDE NEW PANELBOARD LABEL INDICATING WHERE IT IS FED FROM.

5 PROVIDE POWER FOR LIGHTING SEGMENT MANAGER.

ARCHITECT 1877

ajc architects

703 east 1700 south
salt lake city, utah 84105
ph: 801.466.8818
fx: 801.466.4411
www.ajcarchitects.com

LICENSED PROFESSIONAL ENGINEER
No. 5497590-2202
Christopher Mark Kirk
STATE OF UTAH

10.01.21

CONSULTANT

SPECTRUM ENGINEERS
324 S. State St., Suite 400
Salt Lake City, UT 84111
800-678-7077
801-328-5151
fax: 801-328-5155
www.spectrum-engineers.com

OWNER INFORMATION

PROJECT DESCRIPTION

DUMKE GYMNASTICS TRAINING CENTER:

1825 E. SOUTH CAMPUS DRIVE
SALT LAKE CITY, UT 84112

AHJ STAMP

SHEET NAME:
LEVEL 2 POWER PLAN

REVISIONS

MARK	DATE	DESCRIPTION

ISSUE DATA

ISSUE DATE:	10.01.21
ISSUE TYPE:	CD
DRAWN BY:	IBC
CHECKED BY:	LSK
PROJECT#:	1877

SHEET NUMBER:

EP102

ALL IDEAS, DESIGNS, ARRANGEMENTS AND PLANS INDICATED OR REPRESENTED BY THIS DRAWING ARE OWNED BY AND THE PROPERTY OF AJC ARCHITECTS PC AND WERE CREATED, EVOLVED, AND DEVELOPED FOR USE ON AND IN CONNECTION WITH THE SPECIFIED PROJECT. NONE OF SUCH IDEAS, DESIGNS, ARRANGEMENTS OR PLANS SHALL BE USED BY OR DISCLOSED TO ANY PERSON, FIRM, OR CORPORATION FOR ANY PURPOSE WHATSOEVER WITHOUT WRITTEN CONSENT OF AJC ARCHITECTS PC. WRITTEN DIMENSIONS ON THESE DRAWINGS SHALL HAVE PRECEDENCE OVER SCALE DIMENSIONS. CONTRACTORS SHALL VERIFY AND BE RESPONSIBLE FOR ALL DIMENSIONS AND CONDITIONS ON THE JOB AND THIS OFFICE MUST BE NOTIFIED OF ANY VARIATION FROM THE DIMENSIONS AND CONDITIONS SHOWN BY THESE DRAWINGS. WARNING: REPRODUCTION HEREOF IS A CRIMINAL OFFENSE UNDER 18 U.S.C. SEC. 506. UNAUTHORIZED DISCLOSURE MAY CONSTITUTE TRADE SECRET MISAPPROPRIATION IN VIOLATION OF 1 C.2.34-2-31-1 ET. SEQ. AND OTHER LAWS.

10/3/2021 1:34:15 PM C:\Users\ibc\Desktop\Revit Local Files\20201219093 ELEC Central_IBC-Spectrum.rvt

GENERAL SHEET NOTES

1 UNLESS NOTED OTHERWISE, ELECTRICAL ITEMS SHOWN IN DARK AND SOLID LINES ARE NEW AND THE CONTRACTOR SHALL PROVIDE THEM. ITEMS SHOWN IN SOLID LIGHT LINES ARE TO REMAIN.

2 INDICATED LOCATION OF MECHANICAL EQUIPMENT IS APPROXIMATE AND PROVIDED BY OTHERS. COORDINATE EXACT LOCATIONS OF ALL MECHANICAL EQUIPMENT WITH MECHANICAL CONTRACTOR PRIOR TO ROUGH-IN.

3 CONTRACTOR SHALL UPDATE ALL NEW AND EXISTING PANEL SCHEDULES WITH NEW CIRCUIT DATA. SCHEDULE SHALL BE ON A CARD STOCK TYPE OF MATERIAL AND TYPED WITH THE UPDATED INFORMATION.

4 TYPICAL FOR ALL OPEN TO STRUCTURE CEILING AREAS - POWER CABLING AND CONTROLS CABLING SHALL BE INSTALLED IN CONDUIT IN A NEAT AND PROFESSIONAL MANNER, PARALLEL AND PERPENDICULAR TO STRUCTURE WITH CONDUIT UP IN STUCTURE AND PAINTED TO MATCH SURFACE. ALL LOW VOLTAGE CABLING SHALL BE INSTALLED IN TRAY OR CONDUIT. INSTALLATION SHALL COMPLY WITH NECA STANDARDS.

5 PROVIDE BLANK FACEPLATES AT ALL LOCATIONS WHERE DEVICES WERE DEMOLISHED BUT RACEWAY WAS LEFT TO REMAIN AND NO NEW DEVICES ARE BEING INSTALLED AT THAT LOCATION.

6 REFER TO EE701 FOR TYPICAL MOUNTING AND ALIGNMENT OF ELECTRICAL DEVICES.

7 LOCATE ALL EQUIPMENT DISCONNECTS IN ACCESSIBLE LOCATION ADJACENT TO EQUIPMENT AND POSITIONED TO COMPLY WITH NEC WORK SPACE CLEARANCES.

8 COORDINATE EXACT LOCATIONS OF FLOORBOXES AND POKE THROUGH DEVICES WITH ARCHITECT AND BUILDING STRUCTURAL ELEMENTS PRIOR TO INSTALLATION AND ROUGH-IN.

9 ALL EXPOSED RACEWAYS LOCATED IN LABS SHALL BE ROUTED HORIZONTALLY 8FT OR HIGHER UNLESS NOTED OTHERWISE.

10 ALL PATHWAYS FOR LOW VOLTAGE CABLING NOT REQUIRED TO BE IN CONDUITS SHALL BE ROUTED IN J-HOOK PATHWAYS. CONCEAL ALL PATHWAYS ABOVE ACCESSIBLE CEILING SPACES. DO NOT RUN CABLES IN EXPOSED AREAS. WHERE CONCEALMENT IS NOT POSSIBLE IN EXPOSED AREAS, CONTRACTOR SHALL PROVIDE CONDUIT TO ROUTE CABLING WHERE VISIBLE. ALL CONDUIT SHALL BE PAINED TO MATCH CEILING AND PROVIDED WITH PROTECTIVE BUSHINGS.

11 REFER TO EY SHEETS TO ADDITIONAL SECURITY CAMERA DROP LOCATIONS.

SHEET KEYNOTES

1 POWER AND DATA FOR PROJECTOR, COORDINATE EXACT LOCATION WITH EQUIPMENT PRIOR TO ROUGH IN.

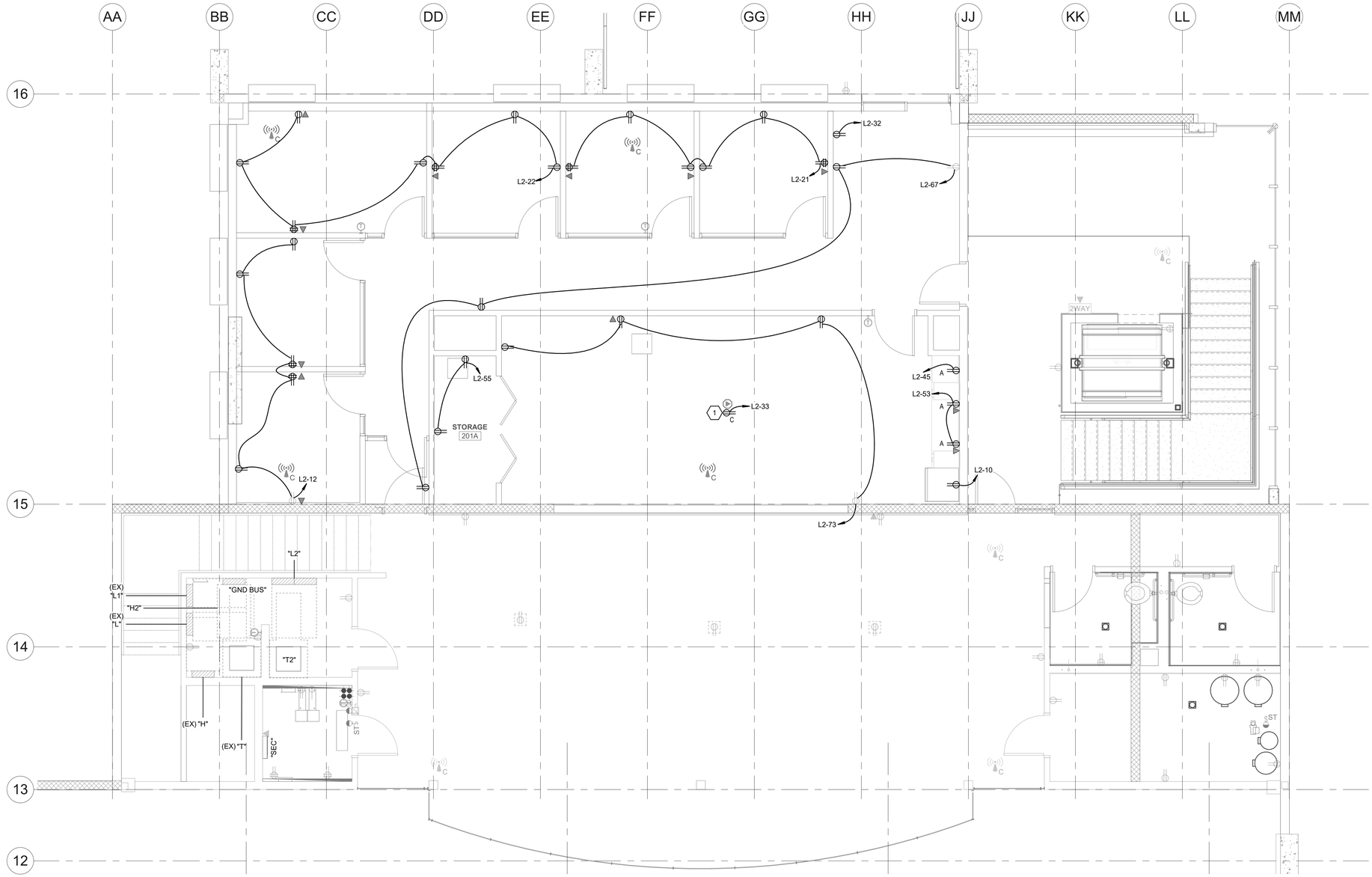

A1 LEVEL 2 POWER PLAN ADD ALTERNATE #1
SCALE: 1/4" = 1'-0"

ARCHITECT 1877
ajc architects
703 east 1700 south
salt lake city, utah 84105
ph: 801.466.8818
fx: 801.466.4411
www.ajcarchitects.com

LICENSED PROFESSIONAL ENGINEER
No. 5497590-2202
Christopher Mark Kirk
STATE OF UTAH

10.01.21

CONSULTANT
SPECTRUM ENGINEERS
324 S. State St., Suite 400
Salt Lake City, UT 84111
800-678-7077
801-328-5151
fax: 801-328-5155
www.spectrum-engineers.com

OWNER INFORMATION

PROJECT DESCRIPTION

DUMKE GYMNASTICS TRAINING CENTER:

1825 E. SOUTH CAMPUS DRIVE
SALT LAKE CITY, UT 84112

AHJ STAMP

SHEET NAME:
LEVEL 2 POWER PLAN ADD ALTERNATE #1

REVISIONS

MARK	DATE	DESCRIPTION

ISSUE DATA

ISSUE DATE:	10.01.21
ISSUE TYPE:	CD
DRAWN BY:	IBC
CHECKED BY:	LSK
PROJECT#:	1877

SHEET NUMBER:

EP102.1

GENERAL SHEET NOTES

1 UNLESS NOTED OTHERWISE, ELECTRICAL ITEMS SHOWN IN DARK AND SOLID LINES ARE NEW AND THE CONTRACTOR SHALL PROVIDE THEM. ITEMS SHOWN IN SOLID LIGHT LINES ARE TO REMAIN.

2 INDICATED LOCATION OF MECHANICAL EQUIPMENT IS APPROXIMATE AND PROVIDED BY OTHERS. COORDINATE EXACT LOCATIONS OF ALL MECHANICAL EQUIPMENT WITH MECHANICAL CONTRACTOR PRIOR TO ROUGH-IN.

3 CONTRACTOR SHALL UPDATE ALL NEW AND EXISTING PANEL SCHEDULES WITH NEW CIRCUIT DATA. SCHEDULE SHALL BE ON A CARD STOCK TYPE OF MATERIAL AND TYPED WITH THE UPDATED INFORMATION.

4 TYPICAL FOR ALL OPEN TO STRUCTURE CEILING AREAS - POWER CABLING AND CONTROLS CABLING SHALL BE INSTALLED IN CONDUIT IN A NEAT AND PROFESSIONAL MANNER, PARALLEL AND PERPENDICULAR TO STRUCTURE WITH CONDUIT UP IN STUCTURE AND PAINTED TO MATCH SURFACE. ALL LOW VOLTAGE CABLING SHALL BE INSTALLED IN TRAY OR CONDUIT. INSTALLATION SHALL COMPLY WITH NECA STANDARDS.

5 PROVIDE BLANK FACEPLATES AT ALL LOCATIONS WHERE DEVICES WERE DEMOLISHED BUT RACEWAY WAS LEFT TO REMAIN AND NO NEW DEVICES ARE BEING INSTALLED AT THAT LOCATION.

6 REFER TO EE701 FOR TYPICAL MOUNTING AND ALIGNMENT OF ELECTRICAL DEVICES.

7 LOCATE ALL EQUIPMENT DISCONNECTS IN ACCESSIBLE LOCATION ADJACENT TO EQUIPMENT AND POSITIONED TO COMPLY WITH NEC WORK SPACE CLEARANCES.

8 COORDINATE EXACT LOCATIONS OF FLOORBOXES AND POKE THROUGH DEVICES WITH ARCHITECT AND BUILDING STRUCTURAL ELEMENTS PRIOR TO INSTALLATION AND ROUGH-IN.

9 ALL EXPOSED RACEWAYS LOCATED IN LABS SHALL BE ROUTED HORIZONTALLY 8FT OR HIGHER UNLESS NOTED OTHERWISE.

10 ALL PATHWAYS FOR LOW VOLTAGE CABLING NOT REQUIRED TO BE IN CONDUITS SHALL BE ROUTED IN J-HOOK PATHWAYS. CONCEAL ALL PATHWAYS ABOVE ACCESSIBLE CEILING SPACES. DO NOT RUN CABLES IN EXPOSED AREAS. WHERE CONCEALMENT IS NOT POSSIBLE IN EXPOSED AREAS, CONTRACTOR SHALL PROVIDE CONDUIT TO ROUTE CABLING WHERE VISIBLE. ALL CONDUIT SHALL BE PAINED TO MATCH CEILING AND PROVIDED WITH PROTECTIVE BUSHINGS.

11 REFER TO EY SHEETS TO ADDITIONAL SECURITY CAMERA DROP LOCATIONS.

SHEET KEYNOTES

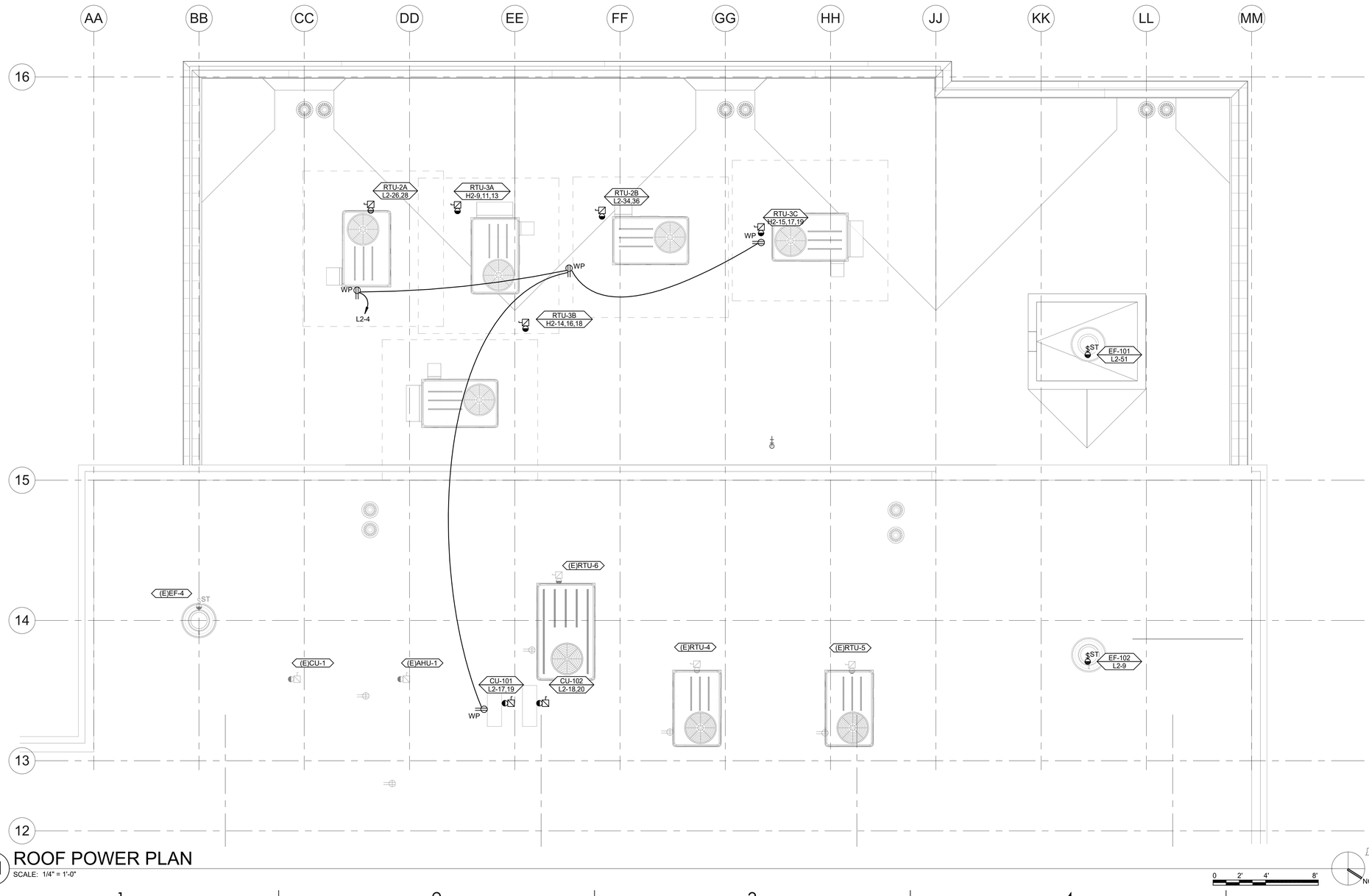

A1 ROOF POWER PLAN
SCALE: 1/4" = 1'-0"

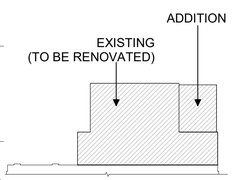

10/3/2021 1:34:11 PM C:\Users\lbc\Desktop\Revit Local Files\2020\20191093 ELEC Central_IBC-Spectrum.rvt

ALL IDEAS, DESIGNS, ARRANGEMENTS AND PLANS INDICATED OR REPRESENTED BY THIS DRAWING ARE OWNED BY AND THE PROPERTY OF AJC ARCHITECTS PC AND WERE CREATED, EVOLVED, AND DEVELOPED FOR USE ON AND IN CONNECTION WITH THE SPECIFIED PROJECT. NONE OF THE IDEAS, DESIGNS, ARRANGEMENTS OR PLANS SHALL BE USED BY OR DISCLOSED TO ANY PERSON, FIRM, OR CORPORATION FOR ANY PURPOSE WHATSOEVER WITHOUT WRITTEN CONSENT OF AJC ARCHITECTS PC. WRITTEN DIMENSIONS ON THESE DRAWINGS SHALL HAVE PRECEDENCE OVER SCALE DIMENSIONS. CONTRACTORS SHALL VERIFY AND BE RESPONSIBLE FOR ALL DIMENSIONS AND CONDITIONS ON THE JOB, AND THIS OFFICE MUST BE NOTIFIED OF ANY VARIATION FROM THE DIMENSIONS AND CONDITIONS SHOWN BY THESE DRAWINGS. WARNING: REPRODUCTION HEREOF IS A CRIMINAL OFFENSE UNDER 18 U.S.C. SEC. 506. UNAUTHORIZED DISCLOSURE MAY CONSTITUTE TRADE SECRET MISAPPROPRIATION IN VIOLATION OF C.2-24-2-1-1 ET. SEQ. AND OTHER LAWS.

ARCHITECT 1877

ajc architects

703 east 1700 south
salt lake city, utah 84105
ph: 801.466.8818
fx: 801.466.4411
www.ajcarchitects.com

LICENSED PROFESSIONAL ENGINEER
No. 5497590-2202
Christopher Mark Kirkham
STATE OF UTAH

10.01.21

CONSULTANT

SPECTRUM ENGINEERS
324 S. State St., Suite 400
Salt Lake City, UT 84111
800-678-7077
801-328-5151
fax: 801-328-5155
www.spectrum-engineers.com

OWNER INFORMATION

PROJECT DESCRIPTION

DUMKE GYMNASTICS TRAINING CENTER:

1825 E. SOUTH CAMPUS DRIVE
SALT LAKE CITY, UT 84112

AHJ STAMP

SHEET NAME:
ROOF POWER PLAN

REVISIONS

MARK	DATE	DESCRIPTION

ISSUE DATA

ISSUE DATE:	10.01.21
ISSUE TYPE:	CD
DRAWN BY:	IBC
CHECKED BY:	LSK
PROJECT#:	1877

SHEET NUMBER:

EP103

ALL IDEAS, DESIGNS, ARRANGEMENTS AND PLANS INDICATED OR REPRESENTED BY THIS DRAWING ARE OWNED BY AND THE PROPERTY OF AJC ARCHITECTS PC AND WERE CREATED, EVOLVED, AND DEVELOPED FOR USE ON AND IN CONNECTION WITH THE SPECIFIED PROJECT. NONE OF THE IDEAS, DESIGNS, ARRANGEMENTS OR PLANS SHALL BE USED BY OR DISCLOSED TO ANY PERSON, FIRM OR CORPORATION FOR ANY PURPOSE WHATSOEVER WITHOUT WRITTEN CONSENT OF AJC ARCHITECTS PC. WRITTEN DIMENSIONS ON THESE DRAWINGS SHALL HAVE PRECEDENCE OVER SCALE DIMENSIONS. CONTRACTORS SHALL VERIFY AND BE RESPONSIBLE FOR ALL DIMENSIONS AND CONDITIONS ON THE JOB AND THIS OFFICE MUST BE NOTIFIED OF ANY VARIATION FROM THE DIMENSIONS AND CONDITIONS SHOWN BY THESE DRAWINGS. WARNING: REPRODUCTION HEREOF IS A CRIMINAL OFFENCE UNDER 18 U.S.C. SEC. 506. UNAUTHORIZED DISCLOSURE MAY CONSTITUTE TRADE SECRET MISAPPROPRIATION IN VIOLATION OF 17-24.3 (H.) ET. SEQ. AND OTHER LAWS.

10/3/2021 1:34:08 PM C:\Users\lbc\Desktop\Revit Local Files\2020\20191093 ELEC Central_IBC-Spectrum.rvt

SHEET KEYNOTES

1 PROTECT AND MAINTAIN ELECTRICAL EQUIPMENT.

2 DEMOLISH PORTION OF EXISTING FEEDER TO BE INTERCEPTED AND EXTENDED.

3 INTERCEPT EXISTING FEEDER BELOW ELECTRICAL ROOM ON LEVEL 1 AND PROVIDE COMPRESSION SPLICES AND EXTEND TO NEW PANELBOARD LOCATION.

4 PROVIDE PANELBOARD WITH FULLY RATED 400AMP FEED THROUGH FOR SECOND SECTION. RE-FEED EXISTING PANELBOARD "H" FROM "H2".

5 PROVIDE A FULLY COORDINATED CIRCUIT BREAKER SOLUTION FOR THE ELEVATOR DISTRIBUTION SYSTEMS TO 0.01 SECONDS.

GENERAL SHEET NOTES

1 PROVIDE NEMA 3R ENCLOSURES FOR EQUIPMENT LOCATED OUTDOORS. REFER TO PLANS FOR EQUIPMENT LOCATIONS.

2 REFER TO PLANS FOR CONSTRAINTS ON PHYSICAL DIMENSIONS AND CLEARANCE REQUIREMENTS OF EQUIPMENT. PROVIDE EQUIPMENT DIMENSIONS THAT FALL WITHIN THE CONSTRAINTS OF EACH SPECIFIC LOCATION.

3 ALL EQUIPMENT SHALL BE CONSTRUCTED AND BRACED FOR THE SEISMIC CONDITIONS OF THE PROJECT. REFER TO ELECTRICAL SPECIFICATIONS FOR REQUIREMENTS.

4 PROVIDE PERFORMANCE TESTING FOR GROUND-FAULT PROTECTION SYSTEMS ON SITE WITH A WRITTEN RECORD OF THIS TEST SUBMITTED TO THE AUTHORITY HAVING JURISDICTION PER NEC 230.95(C).

SERVICE CALCULATION PER NEC 2017, ARTICLE 220.87:
METERED DATA PROVIDE TO SPECTRUM ENGINEERS ON 3/5/2020
FOR 1 YEAR SHOWS A MAXIMUM DEMAND OF 94.6KW FOR 6/27/2019

(MAXIMUM DEMAND) X 125% = CURRENT PEAK DEMAND PER NEC
(94.6KW) X 125% = 118.25KW

NEW LOADS PER NEC = 128KW

SERVICE CALCULATION:
NEW LOAD + CURRENT PEAK DEMAND PER NEC = SERVICE CALC
128KW + 118.25KW = 246KW
246KW/(480V X SQRT(3)) = 296AMPS

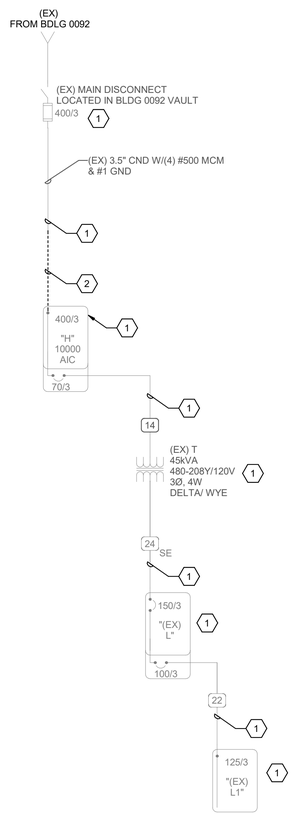

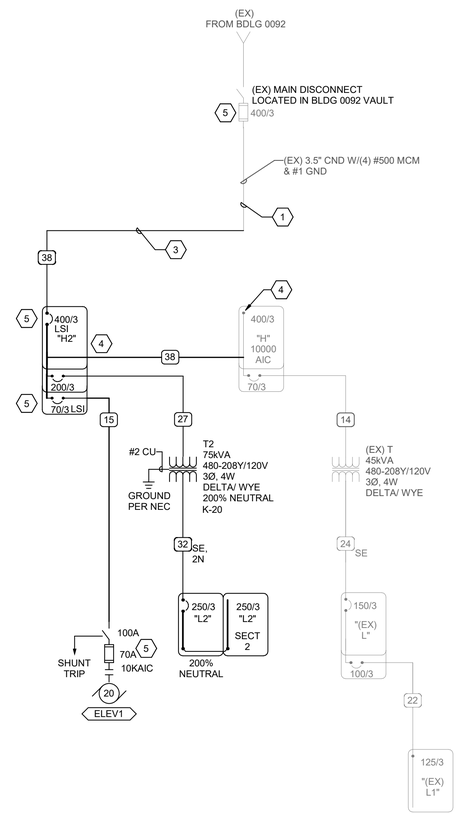

COPPER CONDUCTOR AND CONDUIT SCHEDULE

SCHEDULE NUMBER
SUBSCRIPT (NOTE 5)
(E.G. 5 IG)

SYM	AMP	HH AMPS	CONDUIT SIZE	CONDUCTOR (NOTE 1) QTY	SIZE	G	IG/HH	SE	NOTES
1	20	-	.75	2	12	12	12	8	2
2	20	-	.75	3	12	12	12	8	2,3
3	20	24	.75	4	12	12	12	8	2,3
4	30	-	.75	2	10	10	10	8	2
5	30	-	.75	3	10	10	10	8	2
6	30	32	.75	4	10	10	10	8	2
7	40	-	1	2	8	10	8	6	2
8	40	-	1	3	8	10	8	6	2
9	40	44	1	4	8	10	8	6	2
10	55	-	1	2	6	10	8	4	2
11	55	-	1	3	6	10	8	4	2
12	55	60	1.25	4	6	10	8	4	2
13	70	-	1	2	4	8	4	2	2
14	70	-	1.25	3	4	8	4	2	2
15	70	76	1.25	4	4	8	4	2	2
16	85	-	1.25	2	3	8	3	2	2
17	85	-	1.25	3	3	8	3	2	2
18	85	92	1.25	4	3	8	3	2	2
19	95	-	1.25	3	2	8	2	2	2
20	95	104	1.50	4	2	8	2	2	2
21	130	-	1.50	3	1	6	2	2	2
22	130	116	1.50	4	1	6	2	2	2
23	150	-	2	3	1/0	6	2	1/0	2
24	150	136	2	4	1/0	6	2	1/0	2
25	175	-	2	3	2/0	6	2	2/0	2
26	175	156	2	4	2/0	6	2	2/0	2
27	200	-	2	3	3/0	6	2	2/0	2
28	200	180	2.50	4	3/0	6	2	2/0	2
29	230	-	2.50	3	4/0	4	2	2/0	2
30	230	208	2.50	4	4/0	4	2	2/0	2
31	255	-	2.50	3	250	4	1	2/0	2
32	255	232	2.50	4	250	4	1	2/0	2
33	310	-	3	3	350	3	1/0	3/0	2
34	310	280	3	4	350	3	1/0	3/0	2
35	380	-	3.50	3	500	3	3/0	3/0	2
36	380	344	4	4	500	3	3/0	3/0	2
37	400	-	2 EA 2	3	3/0	3	3/0	3/0	2
38	400	360	2 EA 2.50	4	3/0	3	3/0	3/0	2
39	510	-	2 EA 2.50	3	250	1	4/0	3/0	2
40	510	464	2 EA 3	4	250	1	4/0	3/0	2
41	620	-	2 EA 3	3	350	1/0	4/0	3/0	2,4
42	620	560	2 EA 3	4	350	1/0	4/0	3/0	2,4
43	760	-	2 EA 3.50	3	500	1/0	4/0	3/0	2,4
44	760	688	2 EA 4	4	500	1/0	4/0	3/0	2,4
45	855	-	3 EA 3	3	300	2/0	4/0	3/0	2,4
46	855	768	3 EA 3	4	300	2/0	4/0	3/0	2,4
47	1000	-	3 EA 3.50	3	400	2/0	4/0	3/0	4
48	1000	912	3 EA 3.50	4	400	2/0	4/0	3/0	4
49	1140	-	3 EA 4	3	500	3/0	4/0	3/0	4
50	1140	1032	3 EA 4	4	500	3/0	4/0	3/0	4
51	1240	-	4 EA 3	3	350	3/0	4/0	3/0	4
52	1240	1120	4 EA 3	4	350	3/0	4/0	3/0	4
53	1675	1520	5 EA 4	4	400	4/0	4/0	4/0	4
54	2010	1824	6 EA 4	4	400	250	250	250	4
55	2660	2408	7 EA 4	4	500	350	350	350	4
56	3040	2752	8 EA 4	4	500	500	500	500	4
57	4180	3784	11 EA 4	4	500	500	500	500	4
58	-	-	5 EA 4	-	-	-	-	-	6
59	-	-	5	-	-	-	-	-	6
60	-	-	10 EA 4	-	-	-	-	-	6

CONDUIT AND CONDUCTOR SCHEDULE NOTES

1. CONDUCTORS SHOWN ARE SHOWN FOR EACH CONDUIT WITH MODIFICATIONS AS NOTED IN NOTE 5. ALL CONDUCTORS SHOWN ARE THWN UNLESS OTHERWISE NOTED.
2. PROVIDE EQUIPMENT GROUND CONDUCTORS PER TABLE 250-122 WHEN CIRCUIT BREAKERS ARE SIZED GREATER THAN AMPERE RATING SHOWN IN TABLE.
3. PROVIDE #10 NEUTRALS FOR MULTIWIRE BRANCH CIRCUITS SERVING COMPUTERS.
4. GROUND (G) CONDUCTOR MAY BE DELETED ON SERVICE ENTRANCE CONDUCTORS.
5. SYMBOL SUBSCRIPTS:
   - "2N": INCLUDE TWO NEUTRAL CONDUCTORS SIZED AS SCHEDULED FOR PHASE AND NEUTRAL CONDUCTORS WHERE THE CONDUCTOR IS #1/0 OR LARGER. INCLUDE A SINGLE 200% RATED CONDUCTOR THAT IS TWICE THE AMPACITY OF THE SCHEDULED PHASE AND NEUTRAL CONDUCTOR WHERE THE CONDCUTOR IS BELOW #1/0 IN SIZE.
   - "FG" FULL SIZE GROUND, SIZE EQUIPMENT GROUNDING CONDUCTOR TO BE SAME SIZE AS THE PHASE CONDUCTORS.
   - "HH": NEUTRAL CURRENTS EXIST DUE TO HIGH HARMONIC "NONLINEAR" LOADS. CURRENT CARRYING CONDUCTORS DERATED ACCORDINGLY. PROVIDE THE IG/HH SIZE FOR THE EQUIPMENT GROUNDING CONDUCTOR.
   - "IG": INCLUDE IG (INSULATED/ISOLATED GROUND CONDUCTOR) SCHEDULED ALONG WITH THE GROUND OF EQUIPMENT GROUND CONDUCTOR.
   - "SE": SUBSTITUTE "SE" CONDUCTOR FOR "G" CONDUCTOR SHOWN, WHICH IS SIZED FOR THE GROUNDING OF THE SECONDARY OF THE SEPARATELY DERIVED SYSTEM.
6. RACEWAY ONLY. CONDUCTORS PROVIDED BY UTILITY.

A1 ONE-LINE DIAGRAM DEMOLITION
SCALE: NTS

A3 ONE-LINE DIAGRAM
SCALE: NTS

ARCHITECT 1877
ajc architects
703 east 1700 south
salt lake city, utah 84105
ph: 801.466.8818
fx: 801.466.4411
www.ajcarchitects.com
LICENSED PROFESSIONAL ENGINEER No. 5497590-2202 Christopher Mark Lisk Jr. STATE OF UTAH
10.01.21

CONSULTANT
SPECTRUM ENGINEERS
324 S. State St., Suite 400
Salt Lake City, UT 84111
800-678-7077
801-328-5151
fax: 801-328-5155
www.spectrum-engineers.com

OWNER INFORMATION

PROJECT DESCRIPTION
DUMKE GYMNASTICS TRAINING CENTER:
1825 E. SOUTH CAMPUS DRIVE
SALT LAKE CITY, UT 84112

AHJ STAMP

SHEET NAME:
ONE-LINE DIAGRAM

REVISIONS
MARK DATE DESCRIPTION

ISSUE DATA
ISSUE DATE: 10.01.21
ISSUE TYPE: CD
DRAWN BY: IBC
CHECKED BY: LSK
PROJECT#: 1877

SHEET NUMBER:
EP601

EQUIPMENT SCHEDULE

xxxxxxxx

EQUIPMENT SCHEDULE KEY
E - DIVISION 26
Q - FURNISHED WITH EQUIPMENT
* - COORDINATE WITH THE DIVISION 23 TEMPERATURE CONTROL INSTALLER
** - AUTOMATIC CONTROL WIRING BY DIVISION 23

NOTES:
1. NEMA 3R
2. TOGGLE SWITCH W/ THERMAL OVERLOAD
3. PROVIDE FUSED DISCONNECT ELEVATOR POWER MODULE WITH SHUNT TRIP
4. CONTRACTOR TO PERFOM FINAL CONNECTION TO LINE VOLTAGE THERMOSTATS
5. TOGGLE SWITCH W/BACNET INTERFACE.
6. INDOOR UNITS FED FROM OUTDOOR UNIT. PROVIDE DISCONNECTS FOR BOTH.
7. PROVIDE SWITCH WITH BACNET MS/TP CAPABILITY.
8. PROVIDE LABEL ON DISCONNECT "DISCONNECT OUTDOOR UNIT PRIOR TO INDOOR."
9. LINE VOLTAGE THERMOSTAT ON WALL.
10. PROVIDE EXPLOSION PROOF DEVICES AND WIRING METHODS.
11. PROVIDE DUAL-REDUNDANT 100% RATED VFD'S FOR AIR HANLDER.
12. PROVIDE MANUAL STARTER WITH THERMAL OVERLOAD AND RELAY FOR ATC/BAS CONTROL.

			LOAD DATA								OVERCURRENT PROTECTION			DISCONNECT			STARTER										
MARK	QTY	ITEM DESCRIPTION	HP	kW	MCA	FLA	VOLT	PH	Hz	WIRE AND CONDUIT SIZE	FURN BY	DEVICE	LOCATION	FURN BY	DEVICE	LOCATION	FURN BY	DEVICE	SIZES	SELECTOR SWITCH	PILOT LAMP	NORMALLY OPEN CONTACT	NORMALLY CLOSED CONTACT	PHASE FAILURE RELAY	NOTES	MARK
AC-101	1	SPLIT SYSTEM INDOOR UNIT	-	-	-	1	208	1	60	2 #8, #10 GR 1" CND	E	30/2 CB	L2	E	40A/2P FRS-25	L2	Q	-	-	-	-	-	-	-	8	AC-101
AC-102	1	SPLIT SYSTEM INDOOR UNIT	-	-	-	1	208	1	60	2 #8, #10 GR 1" CND	E	30/2 CB	L2	E	40A/2P FRS-25	L2	Q	-	-	-	-	-	-	-	8	AC-102
ACP-101	1	SPLIT SYSTEM CONDENSATE PUMP	-	-	-	4.4	120	1	60	2 #12, 12 GR 0.75" CND	E	20/1 CB	L2	E	TOGGLE SWITCH	L2	Q	-	-	-	-	-	-	-	-	ACP-101
ACP-102	1	SPLIT SYSTEM CONDENSATE PUMP	-	-	-	4.4	120	1	60	2 #12, 12 GR 0.75" CND	E	20/1 CB	L2	E	TOGGLE SWITCH	L2	Q	-	-	-	-	-	-	-	-	ACP-102
CU-101	1	SPLIT SYSTEM CONDENSING UNIT	-	-	-	19	208	1	60	2 #8, #10 GR 1" CND	E	30/2 CB	L2	E	40A/2P FRS-25	L2	Q	-	-	-	-	-	-	-	1, 6	CU-101
CU-102	1	SPLIT SYSTEM CONDENSING UNIT	-	-	-	19	208	1	60	2 #8, #10 GR 1" CND	E	30/2 CB	L2	E	40A/2P FRS-25	L2	Q	-	-	-	-	-	-	-	1, 6	CU-102
EF-101	1	EXHAUST FAN	-	-	-	4.4	120	1	60	2 #12, 12 GR 0.75" CND	E	20/1 CB	L2	E	TOGGLE SWITCH	L2	Q	-	-	-	-	-	-	-	1	EF-101
EF-102	1	EXHAUST FAN	-	-	-	5.8	120	1	60	2 #12, 12 GR 0.75" CND	E	20/1 CB	L2	E	TOGGLE SWITCH	ADJ TO EQUIP	E	-	-	-	-	-	-	-	1, 12	EF-102
ELEV1	1	ELEVATOR	20	-	-	27	480	3	60	SEE ONE-LINE	E	-	H2	E	SEE ONE-LINE	ADJ TO EQUIP	Q	-	-	-	-	-	-	-	-	ELEV1
RCP-1	1	RECIRCULATION PUMP	-	-	-	4.4	120	1	60	2 #12, 12 GR 0.75" CND	E	20/1 CB	L2	E	TOGGLE SWITCH	L2	Q	-	-	-	-	-	-	-	1	RCP-1
RTU-2A	1	ROOF TOP UNIT	-	-	-	19	208	1	60	2 #10, 10 GR 0.75" CND	E	30/2 CB	L2	E	40A/2P FRS-30	L2	Q	-	-	-	-	-	-	-	1	RTU-2A
RTU-2B	1	ROOF TOP UNIT	-	-	-	19	208	1	60	2 #10, 10 GR 0.75" CND	E	30/2 CB	L2	E	40A/2P FRS-30	L2	Q	-	-	-	-	-	-	-	1	RTU-2B
RTU-3A	1	ROOF TOP UNIT	-	-	-	15	480	3	60	3 #12, #12GR 0.75" CND	E	20/3 CB	H2	E	30A/3P FRS-15	H2	Q	-	-	-	-	-	-	-	1	RTU-3A
RTU-3B	1	ROOF TOP UNIT	-	-	-	15	480	3	60	3 #12, #12GR 0.75" CND	E	20/3 CB	H2	E	30A/3P FRS-15	H2	Q	-	-	-	-	-	-	-	1	RTU-3B
RTU-3C	1	ROOF TOP UNIT	-	-	-	15	480	3	60	3 #12, #12GR 0.75" CND	E	20/3 CB	H2	E	30A/3P FRS-15	H2	Q	-	-	-	-	-	-	-	1	RTU-3C
SAUNA	1	SAUNA	1	-	-	33.4	208	3	60	3 #6, #10 GR 1" CND	E	50/3 CB	L2	E	60A/3P FRS-50	L2	Q	-	-	-	-	-	-	-	-	SAUNA

ELECTRICAL FIXTURE SCHEDULE

EQUIPMENT SCHEDULE KEY
E - DIVISION 26
Q - FURNISHED WITH EQUIPMENT
* - COORDINATE WITH THE DIVISION 23 TEMPERATURE CONTROL INSTALLER
** - AUTOMATIC CONTROL WIRING BY DIVISION 23

NOTES:
1. NEMA 3R
2. TOGGLE SWITCH W/ THERMAL OVERLOAD
3. PROVIDE FUSED DISCONNECT ELEVATOR POWER MODULE WITH SHUNT TRIP
4. CONTRACTOR TO PERFOM FINAL CONNECTION TO LINE VOLTAGE THERMOSTATS
5. TOGGLE SWITCH W/BACNET INTERFACE.

				LOAD DATA				LOAD DATA		CONNECTION TYPE		
ITEM NO.	QTY	DECSRIPTION	MOUNTING HEIGHT (AFF)	VOLT	PHASE	AMPS	kW	HP	WIRE AND CONDUIT SIZE	FURN BY	DEVICE	ELECTRICAL REMARKS
D1	1	TELECOM RACK	+84"	208	1	10	2.1	-	2#12, 12GR 0.75" CND	E	NEMA 6-20	
DRY	1	DRYER	+18"	208	2	20	4.2	-	3#10, 10GR 0.75" CND	E	NEMA 14-30	
HCT	1	HOT/COLD TUB	+18"	208	1	21	4.4	-	2#10, 10GR 0.75" CND	E	NEMA 6-30	
HYD	1	HYDROCOLLATOR	+18"	120	1	9	1.1	-	2#12, 12GR 0.75" CND	E	NEMA 5-20	
ICE	1	ICE MAKER	+18"	120	1	9	1.1	-	2#12, 12GR 0.75" CND	E	NEMA 5-20	
WH-1	1	WATER HEATER	+18"	120	1	2	0.2	-	2#12, 12GR 0.75" CND	E	NEMA 5-20	
WH-2	1	WATER HEATER	+18"	120	1	2	0.2	-	2#12, 12GR 0.75" CND	E	NEMA 5-20	
WS-1	1	WATER SOFTNER	+18"	120	1	2	0.2	-	2#12, 12GR 0.75" CND	E	NEMA 5-20	

FLOORBOX SCHEDULE

ABBREVIATIONS

COMPARTMENT GANG
- - NOT APPLICABLE
A/V - A/V CONNECTIONS, REFER TO A/V DRAWINGS/SPECIFICATIONS
D - DATA RECEPTACLE
DR - DUPLEX RECEPTACLE
QR - QUADRAPLEX RECEPTACLE

RATINGS
- - NOT APPLICABLE

USE
CF - CONCRETE FLOOR

FINISH
AL - ALUMINUM

CONNECTION
C1 - RECESSED CABLE CONNECTIONS BELOW FLOOR WITH HINGED LID FOR ACCESS THAT CAN BE CLOSED WHILE IN USE.

NOTES:
1 PROVIDE ALL REQUIRED HARDWARE FOR COMPLETE INSTALLATION.
2 INCLUDE SEPARATION BARRIER BETWEEN SYSTEMS AND POWER.

COVER
CV1 - FLANGED WITH CARPET INSERT FOR CARPET AREAS, FLANGELESS FLUSH GRAY BRUSHED ALUMINUM LID

		DIMENSIONS			COMPARTMENTS																
ID	DESCRIPTION	LENGTH	WIDTH	DEPTH	GANG 1	GANG 2	GANG 3	GANG 4	GANG 5	GANG 6	GANG 7	GANG 8	RATINGS	USE	CONNECTION	COVER	FINISH	MANUFACTURER 1	PART #	MANUFACTURER 2	PART #	NOTES
FB4	4 GANG POWER/DATA FLOOBOX	13"	10"	4"	DR	DR	D	D	-	-	-	-	-	CF	C1	CV1	AL	WIREMOLD	RFB4-4DBFC	HUBBEL	-	

ALL IDEAS, DESIGNS, ARRANGEMENTS AND PLANS INDICATED OR REPRESENTED BY THIS DRAWING ARE OWNED BY AND THE PROPERTY OF AJC ARCHITECTS PC AND WERE CREATED, EVOLVED, AND DEVELOPED FOR USE ON AND IN CONNECTION WITH THE SPECIFIED PROJECT. NONE OF SUCH IDEAS, DESIGNS, ARRANGEMENTS OR PLANS SHALL BE USED BY OR DISCLOSED TO ANY PERSON, FIRM OR CORPORATION FOR ANY PURPOSE WHATSOEVER WITHOUT WRITTEN CONSENT OF AJC ARCHITECTS PC.
WRITTEN DIMENSIONS ON THESE DRAWINGS SHALL HAVE PRECEDENCE OVER SCALE DIMENSIONS. CONTRACTORS SHALL VERIFY AND BE RESPONSIBLE FOR ALL DIMENSIONS AND CONDITIONS ON THE JOB AND THIS OFFICE MUST BE NOTIFIED OF ANY VARIATION FROM THE DIMENSIONS AND CONDITIONS SHOWN BY THESE DRAWINGS. WARNING: REPRODUCTION HEREOF IS A CRIMINAL OFFENCE UNDER 18 U.S.C. SEC. 506. UNAUTHORIZED DISCLOSURE MAY CONSTITUTE TRADE SECRET MISAPPROPRIATION IN VIOLATION OF 17 C.F.R. 240.21F-17, SEC. 21F, AND OTHER LAWS.

10/3/2021 1:34:03 PM C:\Users\ibc\Desktop\Revit Local Files\20201201911093 ELEC Central_IBC-Spectrum.rvt

ARCHITECT 1877
ajc architects
703 east 1700 south
salt lake city, utah 84105
ph: 801.466.8818
fx: 801.466.4411
www.ajcarchitects.com

LICENSED PROFESSIONAL ENGINEER No. 5497590-2202 Christopher Mark Lisonbee STATE OF UTAH

10.01.21

CONSULTANT
SPECTRUM ENGINEERS
324 S. State St., Suite 400
Salt Lake City, UT 84111
800-678-7077
801-328-5151
fax: 801-328-5155
www.spectrum-engineers.com

OWNER INFORMATION

PROJECT DESCRIPTION

DUMKE GYMNASTICS TRAINING CENTER:

1825 E. SOUTH CAMPUS DRIVE
SALT LAKE CITY, UT 84112

AHJ STAMP

SHEET NAME:
ELECTRICAL SCHEDULES

REVISIONS

MARK	DATE	DESCRIPTION

ISSUE DATA

ISSUE DATE:	10.01.21
ISSUE TYPE:	CD
DRAWN BY:	IBC
CHECKED BY:	LSK
PROJECT#:	1877

SHEET NUMBER:

EP602

PANEL: "H2"

VOLTS/PHASE/WIRE:	PANEL SIZE & TYPE:	MAIN SIZE AND TYPE:	FED FROM:	CABINET:	LOCATION:	NOTES:
480/277 V, 3 PH 4 WIRE	22" W x 6" D, BOLT-ON	400 AMPERE MAIN CB		SURFACE	ELEC/MECH 202A	

ACCESSORIES: PANEL DIRECTORY, IDENTIFICATION, GROUNDING BAR — AIC RATING: 12000

CKT	OCP			LOAD (kVA)				PHASE LOAD							LOAD (kVA)			OCP			CKT
NO	AMP	POLE	BKR	LTG	PWR	CO	DESCRIPTION	A		B		C		DESCRIPTION	CO	PWR	LTG	BKR	POLE	AMP	NO
1	20	1		0.2	0.0	0.0	EXTERIOR LIGHTING	0.4	0.7					LIGHTING ROOM 206, 205, 204, 202,...	0.0	0.0	0.7		1	20	2
3	20	1		0.0	0.0	0.0	ROOM 100			0.6	1.1			LIGHTING ROOM 213, 214	0.0	0.0	1.1		1	20	4
5	20	1		1.7	0.0	0.0	LIGHTING STORAGE 117					1.7	0.4	EXIT SIGNS	0.0	0.0	0.3		1	20	6
7	20	1		3.8	0.0	0.0	LIGHTING ROOM 108, 109, 113,...	4.2	22.4					TRANSFORMER "T2"	19.3	47.1	0.1		3	200	8
9	20	3		0.0	12.5	0.0	RTU-3A			4.2	22.5			--	--	--	--		--	--	10
11	--	--		--	--	--	--					4.2	21.5	--	--	--	--		--	--	12
13	--	--		--	--	--	--	4.2	4.2					RTU-3B	0.0	12.5	0.0		3	20	14
15	30	3		0.0	12.5	0.0	RTU-3C			4.2	4.2			--	--	--	--		--	--	16
17	--	--		--	--	--	--					4.2	4.2	--	--	--	--		--	--	18
19	--	--		--	--	--	--	4.2	7.5					ELEVATOR	0.0	22.5	0.0		3	70	20
21	20	1		--	--	--	SPARE			0.0	7.5			--	--	--	--		--	--	22
23	20	1		--	--	--	SPARE					0.0	7.5	--	--	--	--		--	--	24
25	20	1		--	--	--	SPARE	0.0	0.0					SPARE	--	--	--		1	20	26
27	20	1		--	--	--	SPARE			0.0	0.0			SPARE	--	--	--		1	20	28
29	20	1		--	--	--	SPARE					0.0	0.0	SPARE	--	--	--		1	20	30
31	30	3		--	--	--	SPARE	0.0	0.0					SPARE	--	--	--		3	20	32
33	--	--		--	--	--	--			0.0	0.0			--	--	--	--		--	--	34
35	--	--		--	--	--	--					0.0	0.0	--	--	--	--		--	--	36
37	100	3		--	--	--	SPARE	0.0	69.0					PANEL "H" FEED THRU	9.5	172.7	33.0		3	0	38
39	--	--		--	--	--	--			0.0	71.5			--	--	--	--		--	--	40
41	--	--		--	--	--	--					0.0	74.7	--	--	--	--		--	--	42

TOTALS:
CONNECTED kVA PER PHASE **117** **116** **118** — CONNECTED TOTAL kVA = **350**
CONNECTED AMPS PER PHASE **421** **417** **427** — AVERAGE CONNECTED AMPS PER PHASE = **421**

NEC DIVERSIFIED LOAD CALCULATIONS

LIGHTING & CONTINUOUS LOADS: **40.8 kVA @ 125% = 50.9 kVA** - 100% CONNECTED LOAD PLUS 25% — DIVERSIFIED TOTAL kVA = **357**
RECEPTACLES: **28.8 kVA @ 67% = 19.4 kVA** - FIRST 10kVA @ 100%, REMAINDER @ 50% — AVERAGE AMPS PER PHASE = **429**
ALL OTHER LOADS @ 100% : **285.2 kVA** - MOTOR TOTALS INCLUDED IN ALL OTHER LOADS WITH LARGEST MOTOR CALCULATED @ 125% PER NEC

BKR: GF=GFCI, GF3=30mA GFCI CAPABLE OF BEING LOCAKED OUT IN OPEN POSITION, IG=ISOLATED GROUND, AF=AFCI, ST=SHUNT TRIP, RED=PROVIDE RED COLORED BREAKER, AF=ARC FAULT CURRENT INTERRUPTER, GA=COMBINATION OF GROUND FAULT AND ARC FAULT CIRCUIT INTERRUPTER, GS=COMBINATION OF SHUNT TRIP WITH GFCI

PANEL: "H"

VOLTS/PHASE/WIRE:	PANEL SIZE & TYPE:	MAIN SIZE AND TYPE:	FED FROM:	CABINET:	LOCATION:	NOTES:
480/277 V, 3 PH 4 WIRE	22" W x 6" D, BOLT-ON	400 AMPERE MAIN CB	H2	SURFACE	ELEC/MECH 202A	

ACCESSORIES: PANEL DIRECTORY, IDENTIFICATION, GROUNDING BAR — AIC RATING: 10000

CKT	OCP			LOAD (kVA)				PHASE LOAD							LOAD (kVA)			OCP			CKT
NO	AMP	POLE	BKR	LTG	PWR	CO	DESCRIPTION	A		B		C		DESCRIPTION	CO	PWR	LTG	BKR	POLE	AMP	NO
1	20	1		0.3	0.0	0.0	(EX) EMER. LTG	0.3	2.2					(EX) GYM LTG	0.0	0.0	2.2		1	20	2
3	20	1		1.9	0.0	0.0	(EX) EMER. LTG			1.9	1.8			(EX) GYM LTG	0.0	0.0	1.8		1	20	4
5	20	1		3.7	0.0	0.0	(EX) GYM LTG					3.7	2.8	(EX) GYM LTG	0.0	0.0	2.8		1	20	6
7	20	1		3.7	0.0	0.0	(EX) GYM LTG	3.7	3.7					(EX) GYM LTG	0.0	0.0	3.7		1	20	8
9	20	1		2.8	0.0	0.0	(EX) GYM LTG			2.8	3.7			(EX) GYM LTG	0.0	0.0	3.7		1	20	10
11	20	1		3.7	0.0	0.0	(EX) GYM LTG					3.7	2.8	(EX) EXT LTG	0.0	0.0	2.8		1	20	12
13	30	1		--	--	--	SPARE	0.0	7.6					(EX) RT-5	0.0	22.9	0.0		3	20	14
15	30	1		--	--	--	SPARE			0.0	7.6			--	--	--	--		--	--	16
17	20	3		0.0	11.8	0.0	(EX) RT-4					3.9	7.6	--	--	--	--		--	--	18
19	--	--		--	--	--	--	3.9	12.6					(EX) RT-1	0.0	37.8	0.0		3	60	20
21	--	--		--	--	--	--			3.9	12.6			--	--	--	--		--	--	22
23	20	3		0.0	2.9	0.0	(EX) EF-1, EF-2					1.0	12.6	--	--	--	--		--	--	24
25	--	--		--	--	--	--	1.0	8.5					(EX) RT-2	0.0	25.4	0.0		3	50	26
27	--	--		--	--	--	--			1.0	8.5			--	--	--	--		--	--	28
29	30	3		0.0	2.1	0.0	(EX) AH-1					0.7	8.5	--	--	--	--		--	--	30
31	--	--		--	--	--	--	0.7	8.5					(EX) RT-3	0.0	25.4	0.0		3	50	32
33	--	--		--	--	--	--			0.7	8.5			--	--	--	--		--	--	34
35	20	1		--	--	--	SPARE					0.0	8.5	--	--	--	--		--	--	36
37	70	3		0.0	21.4	9.5	EXISTING XFMR "T"	8.7	7.6					(EX) RT-5, RT-6	0.0	22.9	0.0		3	40	38
39	--	--		--	--	--	--			10.9	7.6			--	--	--	--		--	--	40
41	--	--		--	--	--	--					11.4	7.6	--	--	--	--		--	--	42

TOTALS:
CONNECTED kVA PER PHASE **69** **71** **75** — CONNECTED TOTAL kVA = **215**
CONNECTED AMPS PER PHASE **249** **259** **271** — AVERAGE CONNECTED AMPS PER PHASE = **259**

NEC DIVERSIFIED LOAD CALCULATIONS

LIGHTING & CONTINUOUS LOADS: **33.0 kVA @ 125% = 41.2 kVA** - 100% CONNECTED LOAD PLUS 25% — DIVERSIFIED TOTAL kVA = **223**
RECEPTACLES: **9.5 kVA @ 100% = 9.5 kVA** - FIRST 10kVA @ 100%, REMAINDER @ 50% — AVERAGE AMPS PER PHASE = **269**
ALL OTHER LOADS @ 100% : **172.7 kVA** - MOTOR TOTALS INCLUDED IN ALL OTHER LOADS WITH LARGEST MOTOR CALCULATED @ 125% PER NEC

BKR: GF=GFCI, GF3=30mA GFCI CAPABLE OF BEING LOCAKED OUT IN OPEN POSITION, IG=ISOLATED GROUND, AF=AFCI, ST=SHUNT TRIP, RED=PROVIDE RED COLORED BREAKER, AF=ARC FAULT CURRENT INTERRUPTER, GA=COMBINATION OF GROUND FAULT AND ARC FAULT CIRCUIT INTERRUPTER, GS=COMBINATION OF SHUNT TRIP WITH GFCI

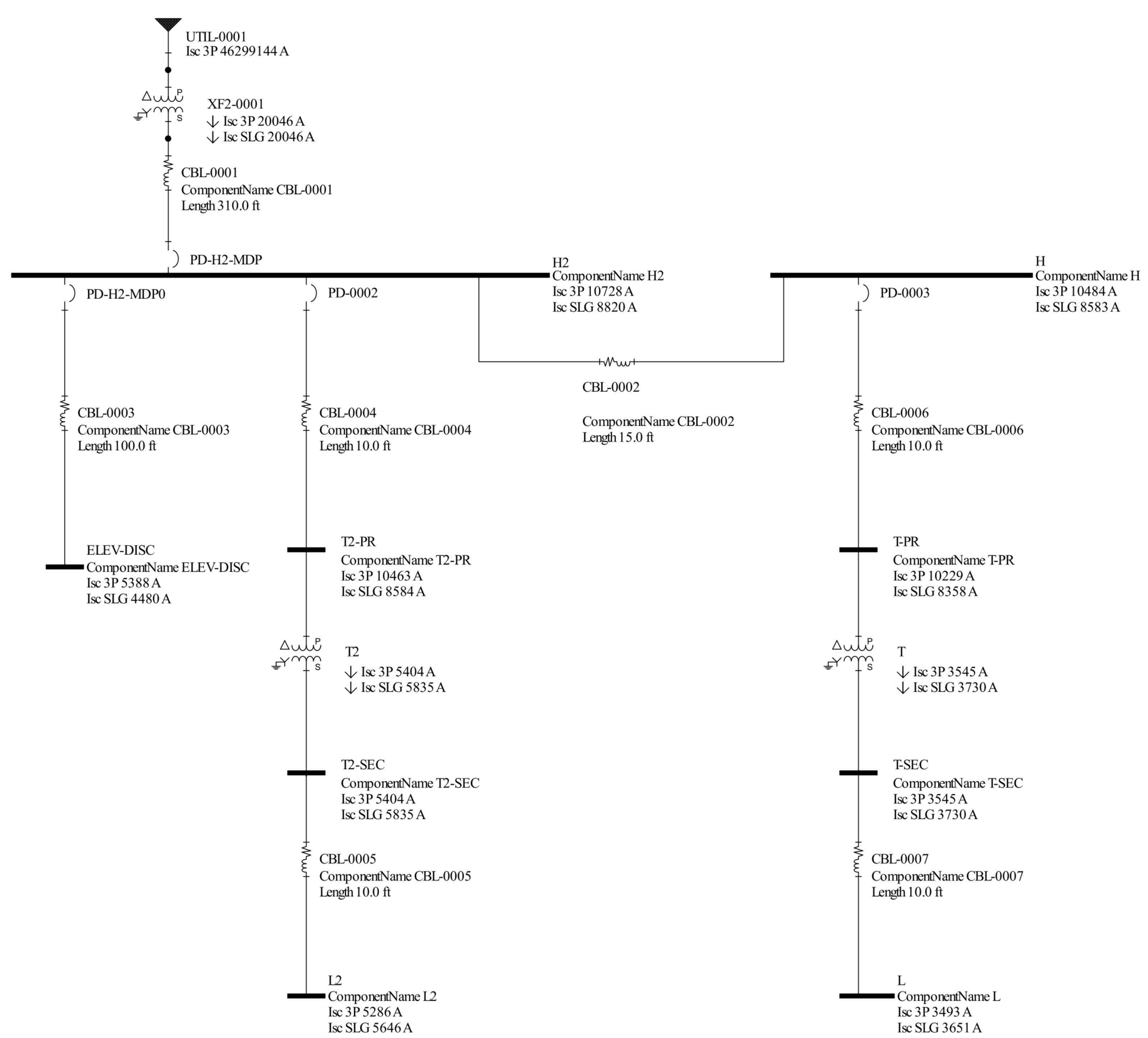

A1 1-LINE - REFERENCE AIC CALC
SCALE: NTS

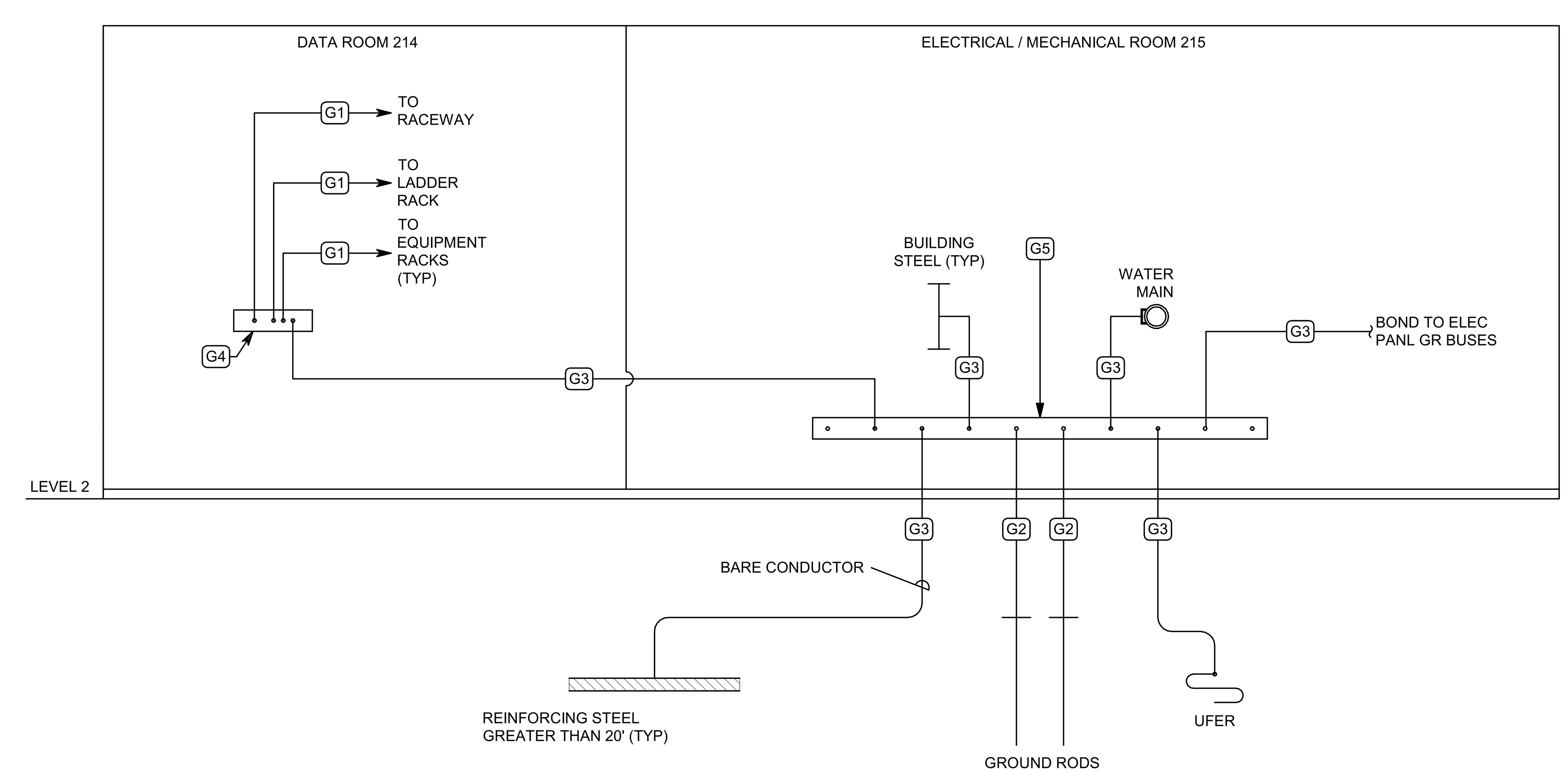

A3 GROUNDING RISER DIAGRAM
SCALE: NTS

GROUNDING SCHEDULE

ALL CONDUCTORS ARE INSULATED UNLESS INDICATED OTHERWISE

SYM	SIZE
G1	#6 CU
G2	#4 CU
G3	#1/0 CU
G4	12"X2"X1/4" COPPER BUS WITH PRE-DRILLED HOLES MOUNTED ON INSULATORS
G5	48"x4"X1/4" COPPER BUS WITH PRE-DRILLED HOLES MOUNTED ON INSULATORS

ARCHITECT 1877
ajc architects
703 east 1700 south
salt lake city, utah 84105
ph: 801.466.8818
fx: 801.466.4411
www.ajcarchitects.com

LICENSED PROFESSIONAL ENGINEER No. 5497590-2202 Christopher Kelly Kobayashi STATE OF UTAH
10.01.21

CONSULTANT
SPECTRUM ENGINEERS
324 S. State St., Suite 400
Salt Lake City, UT 84111
800-678-7077
801-328-5151
fax: 801-328-5155
www.spectrum-engineers.com

OWNER INFORMATION

PROJECT DESCRIPTION

DUMKE GYMNASTICS TRAINING CENTER:

1825 E. SOUTH CAMPUS DRIVE
SALT LAKE CITY, UT 84112

AHJ STAMP

SHEET NAME:
PANEL SCHEDULES & AIC CALC & RISERS

REVISIONS
MARK DATE DESCRIPTION

ISSUE DATA
ISSUE DATE: 10.01.21
ISSUE TYPE: CD
DRAWN BY: IBC
CHECKED BY: LSK
PROJECT#: 1877

SHEET NUMBER:
EP603

10/3/2021 1:33:56 PM C:\Users\ibc\Desktop\Revit Local Files\2020\20191093 ELEC Central_IBC-Spectrum.rvt
ALL IDEAS, DESIGNS, ARRANGEMENTS AND PLANS INDICATED OR REPRESENTED BY THIS DRAWING ARE OWNED BY AND THE PROPERTY OF AJC ARCHITECTS PC AND WERE CREATED, EVOLVED, AND DEVELOPED FOR USE ON AND IN CONNECTION WITH THE SPECIFIED PROJECT. NONE OF THE IDEAS, DESIGNS, ARRANGEMENTS OR PLANS SHALL BE USED BY OR DISCLOSED TO ANY PERSON, FIRM, OR CORPORATION FOR ANY PURPOSE WHATSOEVER WITHOUT WRITTEN CONSENT OF AJC ARCHITECTS PC. WRITTEN DIMENSIONS ON THESE DRAWINGS SHALL HAVE PRECEDENCE OVER SCALE DIMENSIONS. CONTRACTORS SHALL VERIFY AND BE RESPONSIBLE FOR ALL DIMENSIONS AND CONDITIONS ON THE JOB AND THIS OFFICE MUST BE NOTIFIED OF ANY VARIATION FROM THE DIMENSIONS AND CONDITIONS SHOWN BY THESE DRAWINGS. WARNING: REPRODUCTION HEREOF IS A CRIMINAL OFFENSE UNDER 18 U.S.C. SEC. 506. UNAUTHORIZED DISCLOSURE MAY CONSTITUTE TRADE SECRET MISAPPROPRIATION IN VIOLATION OF I.C.24-2-31-1 ET. SEQ. AND OTHER LAWS.

PANEL: "L2"

VOLTS/PHASE/WIRE:	PANEL SIZE & TYPE:	MAIN SIZE AND TYPE:	FED FROM:	CABINET:	LOCATION:	NOTES:
120/208V, 3 PH 4 WIRE	22" W x 6" D, BOLT-ON	250 AMPERE MAIN CB	T2	SURFACE	ELEC/MECH 202A	

ACCESSORIES: PANEL DIRECTORY, IDENTIFICATION, GROUNDING BAR — **AIC RATING:** 10000

CKT NO	OCP AMP	OCP POLE	OCP BKR	LOAD LTG	LOAD PWR	LOAD CO	DESCRIPTION	A	A	B	B	C	C	DESCRIPTION	LOAD CO	LOAD PWR	LOAD LTG	OCP BKR	OCP POLE	OCP AMP	CKT NO
1	20	1		0.0	0.0	0.0	2-WAY COMMUNICATIONS...	0.0	0.2					DECK EXT CO	0.2	0.0	0.0		1	20	2
3	20	1		0.0	0.0	0.2	EXTERIOR CO			0.2	0.7			CO ROOF	0.7	0.0	0.0	GF	1	20	4
5	20	1		0.0	0.3	0.0	ACP-101					0.3	0.7	CO COLUMN TRAINING ROOM 108	0.7	0.0	0.0		1	20	6
7	20	1		0.1	0.0	0.4	ELEV1 CO/LTG	0.4	0.8					REF LOUNGE 101	0.0	0.8	0.0		1	20	8
9	20	1		0.0	0.7	0.0	EF-102			0.7	0.8			REF WAR ROOM 200	0.0	0.8	0.0		1	20	10
11	20	1		0.0	0.0	1.1	CO COACHES LOCKER 112					1.1	1.4	CO ROOM 204, 205	1.4	0.0	0.0		1	20	12
13	20	1		0.0	0.0	1.1	CO LOCKER ROOM 102	1.1	2.2					TRANING ROOM WHIRLPOOL	0.0	4.4	0.0	GF	2	30	14
15	20	1		0.0	1.1	0.2	HYDROCOLLATOR			1.3	2.2			--	--	--	--		--	--	16
17	30	2		0.0	3.9	0.0	CU-101					2.0	2.0	CU-102	0.0	3.9	0.0		2	30	18
19	--	--		--	--	--	--	2.0	2.0					--	--	--	--		--	--	20
21	20	1		0.0	0.0	1.4	CO ROOM 208, 209			1.4	1.6			CO ROOM 206, 207	1.6	0.0	0.0		1	20	22
23	30	2		0.0	4.2	0.0	DRYER					2.1	0.2	SAUNA LIGHTING	0.0	0.2	0.0		1	20	24
25	--	--		--	--	--	--	2.1	2.0					RTU-2A	0.0	3.9	0.0		2	30	26
27	30	2		0.0	2.1	0.0	POWER DATA 214			1.0	2.0			--	--	--	--		--	--	28
29	--	--		--	--	--	--					1.0	0.2	NAC	0.0	0.2	0.0		1	20	30
31	20	1	GF	0.0	0.0	0.7	FB LOUNGE 101	0.7	0.2					PRINTER OPEN OFFICE 218	0.2	0.0	0.0		1	20	32
33	20	1		0.0	0.2	0.0	ROOM 200 PROJECTOR			0.2	2.0			RTU-2B	0.0	3.9	0.0		2	30	34
35	20	1		0.0	0.0	0.0	FSD					0.0	2.0	--	--	--	--		--	--	36
37	20	1		0.0	0.0	0.0	FSD	0.0	0.0					SPARE	--	--	--		1	20	38
39	20	1		0.0	0.0	0.0	FSD			0.0	0.0			SPARE	--	--	--		1	20	40
41	20	1		--	--	--	SPARE					0.0	0.0	SPARE	--	--	--		1	20	42
43	20	1		0.0	0.2	0.0	FACP	0.2	0.2					WATER HEATER (WH-1)	0.0	0.2	0.0		1	20	44
45	20	1		0.0	0.0	0.2	MICROWAVE WAR ROOM 200			0.2	0.2			WATER HEATER (WH-2)	0.0	0.2	0.0		1	20	46
47	20	1		0.0	0.2	0.0	WATER SOFTNER (WS-1)					0.2	0.3	RECIRCULATION PUMP (RCP-1)	0.0	0.3	0.0		1	20	48
49	20	1		0.0	0.3	0.0	ACP-102	0.3	0.4					CO TRAINING ROOM 108	0.4	0.0	0.0		1	20	50
51	20	1		0.0	0.3	0.0	EF-101			0.3	0.4			CO TRAINING ROOM 108	0.4	0.0	0.0		1	20	52
53	20	1		0.0	0.0	0.4	CO WAR ROOM 200					0.4	0.4	CO TRAINING ROOM 108	0.4	0.0	0.0		1	20	54
55	20	1		0.0	0.0	0.4	CO ROOM 201, 100	0.4	0.4					CO LOCKER ROOM 102	0.4	0.0	0.0		1	20	56
57	20	1		0.0	0.0	0.4	CO ROOM 203, 202			0.4	0.4			CO LOCKER ROOM 102	0.4	0.0	0.0		1	20	58
59	20	1		0.0	0.0	0.4	CO LOCKER ROOM 102					0.4	0.4	CO LEGACY HALL 100	0.4	0.0	0.0		1	20	60
61	20	1		0.0	0.4	0.0	A/V 111	0.4	0.5					CO ROOM 108, 101	0.5	0.0	0.0		1	20	62
63	20	1		0.0	0.4	0.0	A/V 111			0.4	0.5			CO STOR. 212	0.5	0.0	0.0		1	20	64
65	20	1		0.0	0.0	0.5	CO TRAINING ROOM 108					0.5	1.1	LIGHTING CONTROLS ELEC/MECH...	0.0	1.1	0.0		1	20	66
67	20	1		0.0	0.0	0.7	CO ROOM 218, 217	0.7	0.7					CO DATA 214	0.7	0.0	0.0		1	20	68
69	20	1		0.0	0.0	1.1	CO LOCKER ROOM 102			1.1	0.7			CO MULTIPURPOSE ROOM 213	0.7	0.0	0.0		1	20	70
71	20	1		0.0	1.1	0.0	ICE MACHINE TRAINING ROOM...					1.1	4.0	SAUNA 104	0.0	12.0	0.0		3	50	72
73	20	1		0.0	0.0	0.7	CO WAR ROOM 200	0.7	4.0					--	--	--	--		--	--	74
75	20	1		--	--	--	SPARE			0.0	4.0			--	--	--	--		--	--	76
77	20	1		--	--	--	SPARE					0.0	0.0	SPARE	--	--	--		1	20	78
79	20	1		--	--	--	SPARE	0.0	0.0					SPARE	--	--	--		1	20	80
81	20	1		--	--	--	SPARE			0.0	0.0			SPARE	--	--	--		1	20	82
83	20	1		--	--	--	SPARE					0.0	0.0	SPARE	--	--	--		1	20	84

TOTALS:
CONNECTED kVA PER PHASE: A **22**, B **23**, C **22** — CONNECTED TOTAL kVA = **66**
CONNECTED AMPS PER PHASE: A **188**, B **189**, C **180** — AVERAGE CONNECTED AMPS PER PHASE = **184**

NEC DIVERSIFIED LOAD CALCULATIONS

LIGHTING & CONTINUOUS LOADS: **0.1 kVA @ 125% = 0.1 kVA** - 100% CONNECTED LOAD PLUS 25% — DIVERSIFIED TOTAL kVA = **65**
RECEPTACLES: **19.3 kVA @ 76% = 14.6 kVA** - FIRST 10kVA @ 100%, REMAINDER @ 50% — AVERAGE AMPS PER PHASE = **180**
ALL OTHER LOADS @ 100% : **50.1 kVA** - MOTOR TOTALS INCLUDED IN ALL OTHER LOADS WITH LARGEST MOTOR CALCULATED @ 125% PER NEC

BKR: GF=GFCI, GF3=30mA GFCI CAPABLE OF BEING LOCAKED OUT IN OPEN POSITION, IG=ISOLATED GROUND, AF=AFCI, ST=SHUNT TRIP, RED=PROVIDE RED COLORED BREAKER, AF=ARC FAULT CURRENT INTERRUPTER, GA=COMBINATION OF GROUND FAULT AND ARC FAULT CIRCUIT INTERRUPTER, GS=COMBINATION OF SHUNT TRIP WITH GFCI

(EX) PANEL: "L"

VOLTS/PHASE/WIRE:	PANEL SIZE & TYPE:	MAIN SIZE AND TYPE:	FED FROM:	CABINET:	LOCATION:	NOTES:
120/208V, 3 PH 4 WIRE	22" W x 6" D, BOLT-ON	150 AMPERE MAIN CB	T	SURFACE	ELEC/MECH 202A	

ACCESSORIES: PANEL DIRECTORY, IDENTIFICATION, GROUNDING BAR — **AIC RATING:** 10000

CKT NO	OCP AMP	OCP POLE	OCP BKR	LOAD LTG	LOAD PWR	LOAD CO	DESCRIPTION	A	A	B	B	C	C	DESCRIPTION	LOAD CO	LOAD PWR	LOAD LTG	OCP BKR	OCP POLE	OCP AMP	CKT NO
1	20	1	NB	0.0	0.0	0.7	CO ROOM 108, 107	0.7	1.4					(EX) ROOF CO	0.2	1.2	0.0		1	20	2
3	20	1	NB	0.0	0.2	0.0	DOOR OPERATOR LEGACY HAL...			0.2	1.0			(EX) EXAUST FAN CO - BLOCK U LTG	0.2	0.8	0.0		1	20	4
5	20	1	NB	0.0	0.0	0.5	CO LEGACY HALL 100					0.5	1.4	(EX) BLINDS	0.2	1.2	0.0		1	20	6
7	20	1	NB	0.0	0.0	0.5	CO SOUTH WALL LOUNGE 101	0.5	0.7					CO NORTH WALL LOUNGE 101	0.7	0.0	0.0	NB	1	20	8
9	20	1	NB	0.0	0.0	0.2	ABOVE OUNTER CO LOUNGE 101			0.2	0.2			ABOVE OUNTER CO LOUNGE 101	0.2	0.0	0.0	NB	1	20	10
11	20	1		0.0	0.3	0.0	(EX) 2ND FLOOR CO					0.3	1.4	(EX) GYM CO	0.0	1.4	0.0		1	20	12
13	20	1		0.0	0.3	0.0	(EX) TELEPHONE POWER	0.3	0.8					(EX) MID CEILING FAN	0.0	0.8	0.0		1	20	14
15	20	1		0.0	0.3	0.0	(EX) UNKNOWN LOAD			0.3	0.4			(EX) SOUTH CEILING FAN	0.0	0.4	0.0		1	20	16
17	20	1		0.0	0.3	0.0	(EX) UNKNOWN LOAD					0.3	0.4	(EX) NORTH CEILING FAN	0.0	0.4	0.0		1	20	18
19	20	1	NB	0.0	0.0	0.4	NORTH WALL CO DATA 214	0.4	0.9					CO STORAGE/LAUNDRY 105	0.9	0.0	0.0	NB	1	20	20
21	20	1		0.0	0.3	0.0	(EX) GYM FLOOR CO			0.3	0.4			(EX) WATER HEATER & PUMP	0.0	0.4	0.0		1	20	22
23	20	1		0.0	0.3	0.0	(EX) 2ND FLOOR CO					0.3	0.5	(EX) EF-3	0.0	0.5	0.0		1	20	24
25	20	1		0.0	0.3	0.0	(EX) 2ND FLOOR CO	0.3	0.2					CO STORAGE/LAUNDRY 105	0.2	0.0	0.0	NB	1	20	26
27	20	1		0.0	0.3	0.0	(EX) 2ND FLOOR CO			0.3	1.2			(EX) 2ND FLOOR CO	0.0	1.2	0.0		1	20	28
29	20	1		0.0	0.3	0.0	(EX) TV OUTLET					0.3	1.9	(EX) L1	2.3	3.3	0.0		3	100	30
31	20	1		0.0	0.3	0.0	(EX) 2ND FLOOR CO	0.3	1.8					--	--	--	--		--	--	32
33	20	1	NB	0.0	0.0	1.1	CO LOCKER ROOM 102			1.1	1.9			--	--	--	--		--	--	34
35	20	1		0.0	0.3	0.0	(EX) 2ND FLOOR CO					0.3	0.2	EXTERIOR CO	0.2	0.0	0.0	NB	1	20	36
37	20	1		--	--	--	(EX) UNKNOWN LOAD	0.0	0.4					EXTERIOR CO	0.4	0.0	0.0	NB	1	20	38
39	30	2		0.0	6.0	0.0	(EX) WHIRLPOOL			3.0	0.4			SOUTH WALL CO WET AREA 103	0.4	0.0	0.0	NB	1	20	40
41	--	--		--	--	--	--					3.0	0.4	EXTERIOR CO	0.4	0.0	0.0	NB	1	20	42

TOTALS:
CONNECTED kVA PER PHASE: A **9**, B **11**, C **11** — CONNECTED TOTAL kVA = **31**
CONNECTED AMPS PER PHASE: A **73**, B **93**, C **97** — AVERAGE CONNECTED AMPS PER PHASE = **86**

NEC DIVERSIFIED LOAD CALCULATIONS

LIGHTING & CONTINUOUS LOADS: - 100% CONNECTED LOAD PLUS 25% — DIVERSIFIED TOTAL kVA = **31**
RECEPTACLES: **9.5 kVA @ 100% = 9.5 kVA** - FIRST 10kVA @ 100%, REMAINDER @ 50% — AVERAGE AMPS PER PHASE = **86**
ALL OTHER LOADS @ 100% : **21.4 kVA** - MOTOR TOTALS INCLUDED IN ALL OTHER LOADS WITH LARGEST MOTOR CALCULATED @ 125% PER NEC

BKR: GF=GFCI, GF3=30mA GFCI CAPABLE OF BEING LOCAKED OUT IN OPEN POSITION, IG=ISOLATED GROUND, AF=AFCI, ST=SHUNT TRIP, RED=PROVIDE RED COLORED BREAKER, AF=ARC FAULT CURRENT INTERRUPTER, GA=COMBINATION OF GROUND FAULT AND ARC FAULT CIRCUIT INTERRUPTER, GS=COMBINATION OF SHUNT TRIP WITH GFCI, NB= NEW BREAKER - COORDINATE WITH EXISTING PANEL.

NOTES:
NEW CIRCUITS SHOWN IN BOLD. PROVIDE NEW BREAKERS FOR NEW CIRCUITS. COORDINATE WITH EXISTING PANEL BOARD; CATALOG NUMBER: AQF3422ABX AXB4N2.

(EX) PANEL: "L1"

VOLTS/PHASE/WIRE:	PANEL SIZE & TYPE:	MAIN SIZE AND TYPE:	FED FROM:	CABINET:	LOCATION:	NOTES:
120/208V, 3 PH 4 WIRE	22" W x 6" D, BOLT-ON	125 AMPERE MAIN LUGS	L	SURFACE	ELEC/MECH 202A	

ACCESSORIES: PANEL DIRECTORY, IDENTIFICATION, GROUNDING BAR — **AIC RATING:** 10000

CKT NO	OCP AMP	OCP POLE	OCP BKR	LOAD LTG	LOAD PWR	LOAD CO	DESCRIPTION	A	A	B	B	C	C	DESCRIPTION	LOAD CO	LOAD PWR	LOAD LTG	OCP BKR	OCP POLE	OCP AMP	CKT NO
1	20	1		0.0	0.3	0.0	(EX) GYM OUTLET	0.3	0.4					ABOVE COUNTER CO WET AREA 103	0.4	0.0	0.0	NB	1	20	2
3	20	1		0.0	0.3	0.0	(EX) EXERCISE OUTLETS			0.3	0.5			CO LOCKER ROOM 102	0.5	0.0	0.0	NB	1	20	4
5	20	1		0.0	0.3	0.0	(EX) FIRE ALARM OUTLET					0.3	0.7	CO COACHES LOCKER 113	0.7	0.0	0.0	NB	1	20	6
7	20	1	NB	0.0	0.0	0.5	CO ROOM 112, 114	0.5	0.2					(EX) UNKNOWN LOAD	0.0	0.3	0.0		2	30	8
9	20	1	NB	0.0	0.4	0.2	CO A/V 111			0.5	0.2			--	--	--	--		--	--	10
11	20	1		0.0	0.3	0.0	(EX) SCAD RTU 103/228					0.3	0.3	(EX) UNKNOWN LOAD	0.0	0.3	0.0		1	20	12
13	20	3		0.0	0.3	0.0	(EX) GAS PILOT ROOF	0.1	0.1					(EX) AH-1 COMPRESSOR	0.0	0.3	0.0		3	45	14
15	--	--		--	--	--	--			0.1	0.1			--	--	--	--		--	--	16
17	--	--		--	--	--	--					0.1	0.1	--	--	--	--		--	--	18
19	20	1		0.0	0.3	0.0	(EX) UNKNOWN LOAD	0.3	0.0					SPACE	--	--	--		--	--	20
21	--	--		--	--	--	SPACE			0.0	0.0			SPACE	--	--	--		--	--	22
23	--	--		--	--	--	SPACE					0.0	0.0	SPACE	--	--	--		--	--	24
25	--	--		--	--	--	SPACE	0.0	0.0					SPACE	--	--	--		--	--	26
27	--	--		--	--	--	SPACE			0.0	0.0			SPACE	--	--	--		--	--	28
29	--	--		--	--	--	SPACE					0.0	0.0	SPACE	--	--	--		--	--	30

TOTALS:
CONNECTED kVA PER PHASE: A **2**, B **2**, C **2** — CONNECTED TOTAL kVA = **6**
CONNECTED AMPS PER PHASE: A **16**, B **15**, C **16** — AVERAGE CONNECTED AMPS PER PHASE = **16**

NEC DIVERSIFIED LOAD CALCULATIONS

LIGHTING & CONTINUOUS LOADS: - 100% CONNECTED LOAD PLUS 25% — DIVERSIFIED TOTAL kVA = **6**
RECEPTACLES: **2.3 kVA @ 100% = 2.3 kVA** - FIRST 10kVA @ 100%, REMAINDER @ 50% — AVERAGE AMPS PER PHASE = **16**
ALL OTHER LOADS @ 100% : **3.3 kVA** - MOTOR TOTALS INCLUDED IN ALL OTHER LOADS WITH LARGEST MOTOR CALCULATED @ 125% PER NEC

BKR: GF=GFCI, GF3=30mA GFCI CAPABLE OF BEING LOCAKED OUT IN OPEN POSITION, IG=ISOLATED GROUND, AF=AFCI, ST=SHUNT TRIP, RED=PROVIDE RED COLORED BREAKER, AF=ARC FAULT CURRENT INTERRUPTER, GA=COMBINATION OF GROUND FAULT AND ARC FAULT CIRCUIT INTERRUPTER, GS=COMBINATION OF SHUNT TRIP WITH GFCI, NB= NEW BREAKER - COORDINATE WITH EXISTING PANEL.

ARCHITECT 1877
ajc architects
703 east 1700 south
salt lake city, utah 84105
ph: 801.466.8818
fx: 801.466.4411
www.ajcarchitects.com

LICENSED PROFESSIONAL ENGINEER No. 5497590-2202 Christopher Kelly Kobayashi STATE OF UTAH
10.01.21

CONSULTANT
SPECTRUM ENGINEERS
324 S. State St., Suite 400
Salt Lake City, UT 84111
800-678-7077
801-328-5151
fax: 801-328-5155
www.spectrum-engineers.com

OWNER INFORMATION

PROJECT DESCRIPTION
DUMKE GYMNASTICS TRAINING CENTER:
1825 E. SOUTH CAMPUS DRIVE
SALT LAKE CITY, UT 84112

AHJ STAMP

SHEET NAME:
PANEL SCHEDULES

REVISIONS
MARK DATE DESCRIPTION

ISSUE DATA
ISSUE DATE: 10.01.21
ISSUE TYPE: CD
DRAWN BY: IBC
CHECKED BY: LSK
PROJECT#: 1877

SHEET NUMBER:
EP604

10/3/2021 1:33:54 PM C:\Users\ibc\Desktop\Revit Local Files\2020\20191093 ELEC Central_IBC-Spectrum.rvt
ALL IDEAS, DESIGNS, ARRANGEMENTS AND PLANS INDICATED OR REPRESENTED BY THIS DRAWING ARE OWNED BY AND THE PROPERTY OF AJC ARCHITECTS PC AND WERE CREATED, EVOLVED, AND DEVELOPED FOR USE ON AND IN CONNECTION WITH THE SPECIFIED PROJECT. NONE OF THE IDEAS, DESIGNS, ARRANGEMENTS OR PLANS SHALL BE USED BY OR DISCLOSED TO ANY PERSON, FIRM, OR CORPORATION FOR ANY PURPOSE WHATSOEVER WITHOUT WRITTEN CONSENT OF AJC ARCHITECTS PC. WRITTEN DIMENSIONS ON THESE DRAWINGS SHALL HAVE PRECEDENCE OVER SCALE DIMENSIONS. CONTRACTORS SHALL VERIFY AND BE RESPONSIBLE FOR ALL DIMENSIONS AND CONDITIONS ON THE JOB AND THIS OFFICE MUST BE NOTIFIED OF ANY VARIATION FROM THE DIMENSIONS AND CONDITIONS SHOWN BY THESE DRAWINGS. WARNING: REPRODUCTION HEREOF IS A CRIMINAL OFFENSE UNDER 18 U.S.C. SEC. 506. UNAUTHORIZED DISCLOSURE MAY CONSTITUTE TRADE SECRET MISAPPROPRIATION IN VIOLATION OF I.C.24-2-31-1 ET. SEQ. AND OTHER LAWS.

ALL IDEAS, DESIGNS, ARRANGEMENTS AND PLANS INDICATED OR REPRESENTED BY THIS DRAWING ARE OWNED BY AND THE PROPERTY OF AJC ARCHITECTS PC AND WERE CREATED, EVOLVED, AND DEVELOPED FOR USE ON AND IN CONNECTION WITH THE SPECIFIED PROJECT. NONE OF SUCH IDEAS, DESIGNS, ARRANGEMENTS OR PLANS SHALL BE USED BY OR DISCLOSED TO ANY PERSON, FIRM, OR CORPORATION FOR ANY PURPOSE WHATSOEVER WITHOUT WRITTEN CONSENT OF AJC ARCHITECTS PC. WRITTEN DIMENSIONS ON THESE DRAWINGS SHALL HAVE PRECEDENCE OVER SCALE DIMENSIONS. CONTRACTORS SHALL VERIFY AND BE RESPONSIBLE FOR ALL DIMENSIONS AND CONDITIONS ON THE JOB AND THIS OFFICE MUST BE NOTIFIED OF ANY VARIATION FROM THE DIMENSIONS AND CONDITIONS SHOWN BY THESE DRAWINGS. WARNING: REPRODUCTION HEREOF IS A CRIMINAL OFFENSE UNDER 18 U.S.C. SEC. 506. UNAUTHORIZED DISCLOSURE MAY CONSTITUTE TRADE SECRET

10/3/2021 1:33:51 PM C:\Users\ibc\Desktop\Revit Local Files\20202019109 3 ELEC Central_IBC-Spectrum.rvt

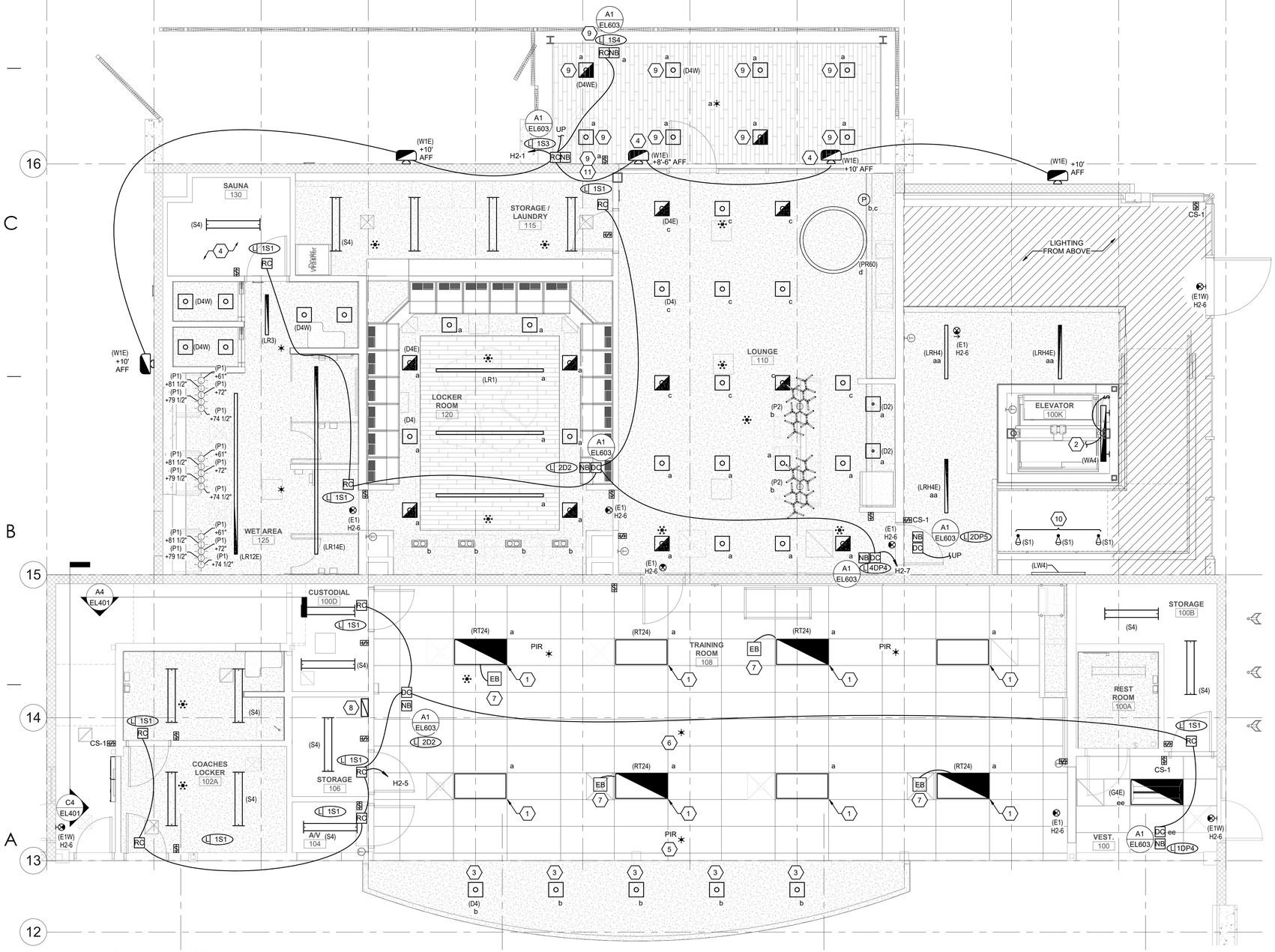

A1 LEVEL 1 LIGHTING PLAN
SCALE: 1/4" = 1'-0"

GENERAL SHEET NOTES

1 UNLESS NOTED OTHERWISE, ELECTRICAL ITEMS SHOWN IN DARK AND SOLID LINES ARE NEW AND THE CONTRACTOR SHALL PROVIDE THEM. ITEMS SHOWN IN SOLID LIGHT LINES ARE TO REMAIN.

2 COORDINATE LOCATIONS AND MOUNTING HEIGHTS OF ALL LIGHT FIXTURES ON THIS LEVEL WITH MECHANICAL EQUIPMENT, DUCT, PIPE, PLUMBING, ETC. PRIOR TO ROUGH-IN.

3 CONTRACTOR SHALL UPDATE PANEL SCHEDULES WITH NEW CIRCUIT DATA TYPED ON CARD STOCK TYPE MATERIAL.

4 ALL EXPOSED CONDUITS ROUTED IN CEILING SHALL BE PAINTED TO MATCH CEILING.

5 ALL CEILING MOUNTED DEVICES LOCATED IN LAY-IN GRID CEILINGS SHALL BE INSTALLED CENTERED IN CEILING TILES AND/OR ALIGNED WITH OTHER FIXTURES WITHIN THE SAME PLANE AND CEILING SPACE.

6 LIGHTING CONTROL DIMMING AND ROOM CONTROLLER SHALL BE LOCATED AS FOLLOWS WHERE POSSIBLE UNLESS NOTED OTHERWISE. LOCATE ABOVE ACCESSIBLE CEILING NEAR THE DOOR THAT CONTROLLER SERVES BUT OUT OF THE PATH OF EGRESS, REFER TO DETAIL FOR ADDITIONAL INFORMATION.

7 PROVIDE UNSWITCHED EMERGENCY HOT CIRCUIT TO ALL LIGHT FIXTURES WITH EMERGENCY TRANSFERS TO ALLOW FOR POWER LOSS SENSING.

8 REFER TO EE701 FOR TYPICAL MOUNTING AND ALIGNMENT OF ELECTRICAL DEVICES.

9 CONTRACTOR SHALL BE REQUIRED TO PROVIDE ALL MOUNTING HARDWARE ALONG WITH REQUIRED SEISMIC BRACING FOR EACH FIXTURE.

10 ALL EXPOSED RACEWAYS LOCATED IN LABS SHALL BE ROUTED HORIZONTALLY 8FT OR HIGHER UNLESS NOTED OTHERWISE.

11 ALL PATHWAYS FOR LOW VOLTAGE CABLING NOT REQUIRED TO BE IN CONDUITS SHALL BE ROUTED IN J-HOOK PATHWAYS. CONCEAL ALL PATHWAYS ABOVE ACCESSIBLE CEILING SPACES. DO NOT RUN CABLES IN EXPOSED AREAS. WHERE CONCEALMENT IS NOT POSSIBLE IN EXPOSED AREAS, CONTRACTOR SHALL PROVIDE CONDUIT TO ROUTE CABLING WHERE VISIBLE. ALL CONDUIT SHALL BE PAINED TO MATCH CEILING AND PROVIDED WITH PROTECTIVE BUSHINGS.

SHEET KEYNOTES

1 INSTALL SALVAGED LIGHT FIXTURE.

2 CONTINUE CIRCUIT TO RECEPTACLE LOCATED DIRECTLY BELOW REFER TO ASSOCIATE "EP" SHEET FOR CONTINUATION OF CIRCUIT.

3 PROVIDE AS PART OF ADD ALTERNATE #3.

4 PROVIDE AS PART OF BASE BID.

5 INSTALL SALVAGED PIR SENOR.

6 INSTALL SALVAGED ULTRASONIC SENOR.

7 PROVIDE REMOTE EMERGENCY BATTERY FOR LIGHT FIXTURE.

8 UV LIGHT FIXTURE CONTROLLER HOUSING LOCATION.

9 PROVIDE AS PART OF ADD ALTERNATE #2.

10 COORDINATE WITH PLATFORM FOR INSTALLATION.

11 PROVIDE WEATHER PROOF COVER FOR LOW VOLTAGE SWITCH.

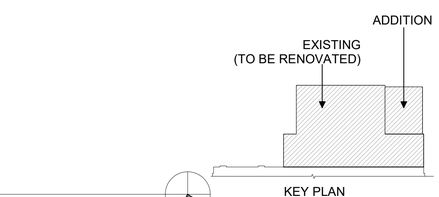

0 2' 4' 8'

NORTH

ARCHITECT 1877
ajc architects
703 east 1700 south
salt lake city, utah 84105
ph: 801.466.8818
fx: 801.466.4411
www.ajcarchitects.com
LICENSED PROFESSIONAL ENGINEER
No. 5497590-2202
Christopher Michael Kirkham
STATE OF UTAH
10.01.21

CONSULTANT
SPECTRUM ENGINEERS
324 S. State St., Suite 400
Salt Lake City, UT 84111
800-678-7077
801-328-5151
fax: 801-328-5155
www.spectrum-engineers.com

OWNER INFORMATION

PROJECT DESCRIPTION

DUMKE GYMNASTICS TRAINING CENTER:

1825 E. SOUTH CAMPUS DRIVE
SALT LAKE CITY, UT 84112

AHJ STAMP

SHEET NAME:
LEVEL 1 LIGHTING PLAN

REVISIONS

MARK	DATE	DESCRIPTION

ISSUE DATA

ISSUE DATE:	10.01.21
ISSUE TYPE:	CD
DRAWN BY:	IBC
CHECKED BY:	LSK
PROJECT#:	1877

SHEET NUMBER:

EL101

10/3/2021 1:33:31 PM C:\Users\ibc\Desktop\Revit Local Files\2020\20191093 ELEC Central_IBC-Spectrum.rvt

ALL IDEAS, DESIGNS, ARRANGEMENTS AND PLANS INDICATED OR REPRESENTED BY THIS DRAWING ARE OWNED BY AND THE PROPERTY OF AJC ARCHITECTS PC AND WERE CREATED, EVOLVED, AND DISCLOSED FOR USE ON AND IN CONNECTION WITH THE SPECIFIED PROJECT. NONE OF THE IDEAS, DESIGNS, ARRANGEMENTS OR PLANS SHALL BE USED BY OR DISCLOSED TO ANY PERSON, FIRM, OR CORPORATION FOR ANY PURPOSE WHATSOEVER WITHOUT WRITTEN CONSENT OF AJC ARCHITECTS PC. WRITTEN DIMENSIONS ON THESE DRAWINGS SHALL HAVE PRECEDENCE OVER SCALE DIMENSIONS. CONTRACTORS SHALL VERIFY AND BE RESPONSIBLE FOR ALL DIMENSIONS AND CONDITIONS ON THE JOB AND THIS OFFICE MUST BE NOTIFIED OF ANY VARIATION FROM THE DIMENSIONS AND CONDITIONS SHOWN BY THESE DRAWINGS. WARNING: REPRODUCTION HEREOF IS A CRIMINAL OFFENSE UNDER 18 U.S.C. SEC. 506. UNAUTHORIZED DISCLOSURE MAY CONSTITUTE TRADE SECRET MISAPPROPRIATION IN VIOLATION OF 17 C.24.2-311 ET. SEQ. AND OTHER LAWS.

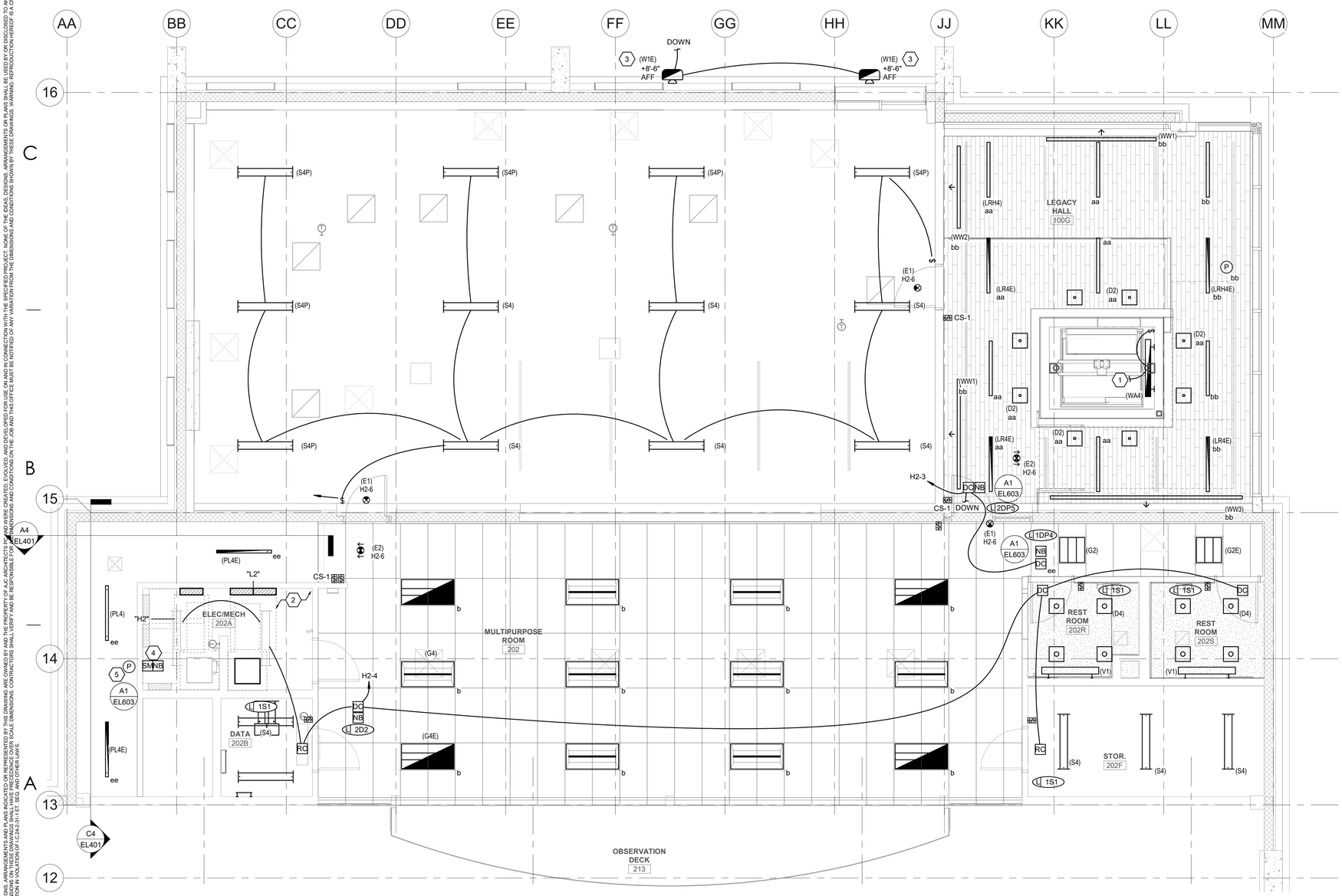

A1 LEVEL 2 LIGHTING PLAN

SCALE: 1/4" = 1'-0"

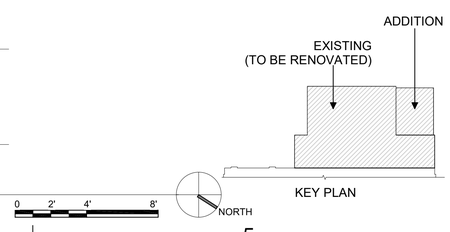

GENERAL SHEET NOTES

1. UNLESS NOTED OTHERWISE, ELECTRICAL ITEMS SHOWN IN DARK AND SOLID LINES ARE NEW AND THE CONTRACTOR SHALL PROVIDE THEM. ITEMS SHOWN IN SOLID LIGHT LINES ARE TO REMAIN.
2. COORDINATE LOCATIONS AND MOUNTING HEIGHTS OF ALL LIGHT FIXTURES ON THIS LEVEL WITH MECHANICAL EQUIPMENT, DUCT, PIPE, PLUMBING, ETC. PRIOR TO ROUGH-IN.
3. CONTRACTOR SHALL UPDATE PANEL SCHEDULES WITH NEW CIRCUIT DATA TYPED ON CARD STOCK TYPE MATERIAL.
4. ALL EXPOSED CONDUITS ROUTED IN CEILING SHALL BE PAINTED TO MATCH CEILING.
5. ALL CEILING MOUNTED DEVICES LOCATED IN LAY-IN GRID CEILINGS SHALL BE INSTALLED CENTERED IN CEILING TILES AND/OR ALIGNED WITH OTHER FIXTURES WITHIN THE SAME PLANE AND CEILING SPACE.
6. LIGHTING CONTROL DIMMING AND ROOM CONTROLLER SHALL BE LOCATED AS FOLLOWS WHERE POSSIBLE UNLESS NOTED OTHERWISE. LOCATE ABOVE ACCESSIBLE CEILING NEAR THE DOOR THAT CONTROLLER SERVES BUT OUT OF THE PATH OF EGRESS, REFER TO DETAIL FOR ADDITIONAL INFORMATION.
7. PROVIDE UNSWITCHED EMERGENCY HOT CIRCUIT TO ALL LIGHT FIXTURES WITH EMERGENCY TRANSFERS TO ALLOW FOR POWER LOSS SENSING.
8. REFER TO EE701 FOR TYPICAL MOUNTING AND ALIGNMENT OF ELECTRICAL DEVICES.
9. CONTRACTOR SHALL BE REQUIRED TO PROVIDE ALL MOUNTING HARDWARE ALONG WITH REQUIRED SEISMIC BRACING FOR EACH FIXTURE.
10. ALL EXPOSED RACEWAYS LOCATED IN LABS SHALL BE ROUTED HORIZONTALLY 8FT OR HIGHER UNLESS NOTED OTHERWISE.
11. ALL PATHWAYS FOR LOW VOLTAGE CABLING NOT REQUIRED TO BE IN CONDUITS SHALL BE ROUTED IN J-HOOK PATHWAYS. CONCEAL ALL PATHWAYS ABOVE ACCESSIBLE CEILING SPACES. DO NOT RUN CABLES IN EXPOSED AREAS. WHERE CONCEALMENT IS NOT POSSIBLE IN EXPOSED AREAS, CONTRACTOR SHALL PROVIDE CONDUIT TO ROUTE CABLING WHERE VISIBLE. ALL CONDUIT SHALL BE PAINED TO MATCH CEILING AND PROVIDED WITH PROTECTIVE BUSHINGS.

SHEET KEYNOTES

1. CONTINUE CIRCUIT TO RECEPTACLE LOCATED DIRECTLY BELOW REFER TO ASSOCIATE "EP" SHEET FOR CONTINUATION OF CIRCUIT.
2. RE-CIRCUIT EXISTING LIGHTING IN SPACE TO NEW CIRCUIT.
3. PROVIDE AS PART OF ADD ALTERNATE #2.
4. LOCATION OF NETWORKED LIGHTING CONTROLLER.
5. PROVIDE EXTERIOR RATED PHOTOCELL ON ROOF AND CONNECT TO NETWORK LIGHTING CONTROLLER.

ARCHITECT 1877

ajc architects

703 east 1700 south
salt lake city, utah 84105
ph: 801.466.8818
fx: 801.466.4411
www.ajcarchitects.com

LICENSED PROFESSIONAL ENGINEER
No. 5497590-2202
Christopher Kirk Kapp
STATE OF UTAH

10.01.21

CONSULTANT

SPECTRUM ENGINEERS

324 S. State St., Suite 400
Salt Lake City, UT 84111
800-678-7077
801-328-5151
fax: 801-328-5155
www.spectrum-engineers.com

OWNER INFORMATION

PROJECT DESCRIPTION

DUMKE GYMNASTICS TRAINING CENTER:

1825 E. SOUTH CAMPUS DRIVE
SALT LAKE CITY, UT 84112

AHJ STAMP

SHEET NAME:

LEVEL 2 LIGHTING PLAN

REVISIONS

MARK	DATE	DESCRIPTION

ISSUE DATA

ISSUE DATE:	10.01.21
ISSUE TYPE:	CD
DRAWN BY:	IBC
CHECKED BY:	LSK
PROJECT#:	1877

SHEET NUMBER:

EL102

ALL IDEAS, DESIGNS, ARRANGEMENTS AND PLANS INDICATED OR REPRESENTED BY THIS DRAWING ARE OWNED BY AND THE PROPERTY OF AJC ARCHITECTS PC AND WERE CREATED, EVOLVED, AND DISCLOSED FOR USE ON AND IN CONNECTION WITH THE SPECIFIED PROJECT. NONE OF THE IDEAS, DESIGNS, ARRANGEMENTS OR PLANS SHALL BE USED BY OR DISCLOSED TO ANY PERSON, FIRM, OR CORPORATION FOR ANY PURPOSE WHATSOEVER WITHOUT WRITTEN CONSENT OF AJC ARCHITECTS PC. WRITTEN DIMENSIONS ON THESE DRAWINGS SHALL HAVE PRECEDENCE OVER SCALE DIMENSIONS. CONTRACTORS SHALL VERIFY AND BE RESPONSIBLE FOR ALL DIMENSIONS AND CONDITIONS ON THE JOB AND THIS OFFICE MUST BE NOTIFIED OF ANY VARIATION FROM THE DIMENSIONS AND CONDITIONS SHOWN BY THESE DRAWINGS. WARNING: REPRODUCTION HEREOF IS A CRIMINAL OFFENSE UNDER 18 U.S.C. SEC. 506. UNAUTHORIZED DISCLOSURE MAY CONSTITUTE TRADE SECRET MISAPPROPRIATION IN VIOLATION OF 17 C.F.R. 240.10b-5 ET. SEQ. AND OTHER LAWS.

10/3/2021 1:33:27 PM C:\Users\ljbc\Desktop\Revit Local Files\2020\20191093 ELEC Central_IBC-Spectrum.rvt

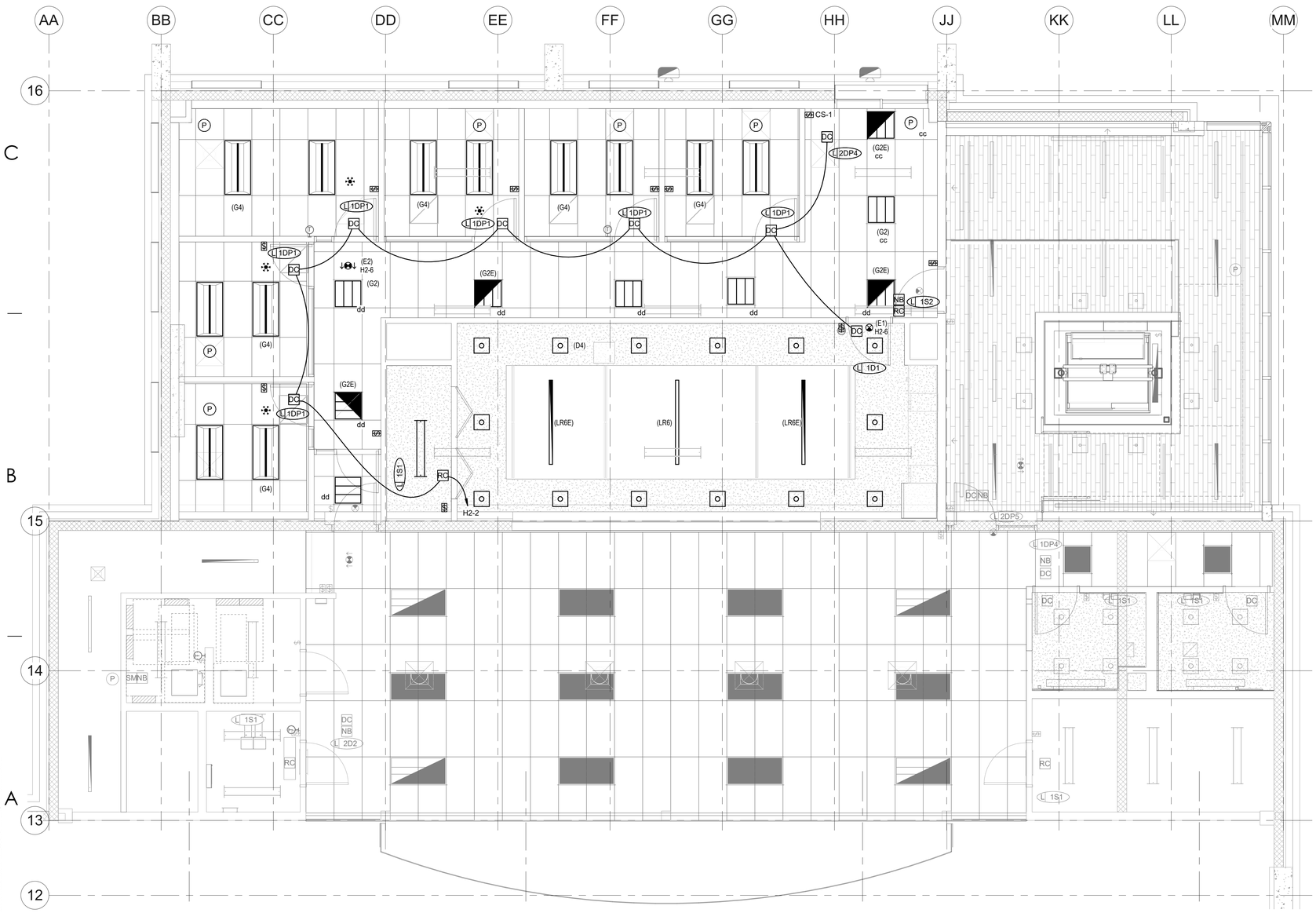

A1 LEVEL 2 LIGHTING PLAN ADD ALTERNATE #1
SCALE: 1/4" = 1'-0"

0 2' 4' 8' NORTH

GENERAL SHEET NOTES

1 UNLESS NOTED OTHERWISE, ELECTRICAL ITEMS SHOWN IN DARK AND SOLID LINES ARE NEW AND THE CONTRACTOR SHALL PROVIDE THEM. ITEMS SHOWN IN SOLID LIGHT LINES ARE TO REMAIN.

2 COORDINATE LOCATIONS AND MOUNTING HEIGHTS OF ALL LIGHT FIXTURES ON THIS LEVEL WITH MECHANICAL EQUIPMENT, DUCT, PIPE, PLUMBING, ETC. PRIOR TO ROUGH-IN.

3 CONTRACTOR SHALL UPDATE PANEL SCHEDULES WITH NEW CIRCUIT DATA TYPED ON CARD STOCK TYPE MATERIAL.

4 ALL EXPOSED CONDUITS ROUTED IN CEILING SHALL BE PAINTED TO MATCH CEILING.

5 ALL CEILING MOUNTED DEVICES LOCATED IN LAY-IN GRID CEILINGS SHALL BE INSTALLED CENTERED IN CEILING TILES AND/OR ALIGNED WITH OTHER FIXTURES WITHIN THE SAME PLANE AND CEILING SPACE.

6 LIGHTING CONTROL DIMMING AND ROOM CONTROLLER SHALL BE LOCATED AS FOLLOWS WHERE POSSIBLE UNLESS NOTED OTHERWISE. LOCATE ABOVE ACCESSIBLE CEILING NEAR THE DOOR THAT CONTROLLER SERVES BUT OUT OF THE PATH OF EGRESS, REFER TO DETAIL FOR ADDITIONAL INFORMATION.

7 PROVIDE UNSWITCHED EMERGENCY HOT CIRCUIT TO ALL LIGHT FIXTURES WITH EMERGENCY TRANSFERS TO ALLOW FOR POWER LOSS SENSING.

8 REFER TO EE701 FOR TYPICAL MOUNTING AND ALIGNMENT OF ELECTRICAL DEVICES.

9 CONTRACTOR SHALL BE REQUIRED TO PROVIDE ALL MOUNTING HARDWARE ALONG WITH REQUIRED SEISMIC BRACING FOR EACH FIXTURE.

10 ALL EXPOSED RACEWAYS LOCATED IN LABS SHALL BE ROUTED HORIZONTALLY 8FT OR HIGHER UNLESS NOTED OTHERWISE.

11 ALL PATHWAYS FOR LOW VOLTAGE CABLING NOT REQUIRED TO BE IN CONDUITS SHALL BE ROUTED IN J-HOOK PATHWAYS. CONCEAL ALL PATHWAYS ABOVE ACCESSIBLE CEILING SPACES. DO NOT RUN CABLES IN EXPOSED AREAS. WHERE CONCEALMENT IS NOT POSSIBLE IN EXPOSED AREAS, CONTRACTOR SHALL PROVIDE CONDUIT TO ROUTE CABLING WHERE VISIBLE. ALL CONDUIT SHALL BE PAINED TO MATCH CEILING AND PROVIDED WITH PROTECTIVE BUSHINGS.

SHEET KEYNOTES

ARCHITECT 1877

ajc architects

703 east 1700 south
salt lake city, utah 84105
ph: 801.466.8818
fx: 801.466.4411
www.ajcarchitects.com

LICENSED PROFESSIONAL ENGINEER
No. 5497590-2202
Christopher Kirk Sant
STATE OF UTAH

10.01.21

CONSULTANT

SPECTRUM ENGINEERS
324 S. State St., Suite 400
Salt Lake City, UT 84111
800-678-7077
801-328-5151
fax: 801-328-5155
www.spectrum-engineers.com

OWNER INFORMATION

PROJECT DESCRIPTION

DUMKE GYMNASTICS TRAINING CENTER:

1825 E. SOUTH CAMPUS DRIVE
SALT LAKE CITY, UT 84112

AHJ STAMP

SHEET NAME:
LEVEL 2 LIGHTING PLAN ADD ALTERNATE #1

REVISIONS

MARK	DATE	DESCRIPTION

ISSUE DATA

ISSUE DATE:	10.01.21
ISSUE TYPE:	CD
DRAWN BY:	IBC
CHECKED BY:	LSK
PROJECT#:	1877

SHEET NUMBER:

EL102.1

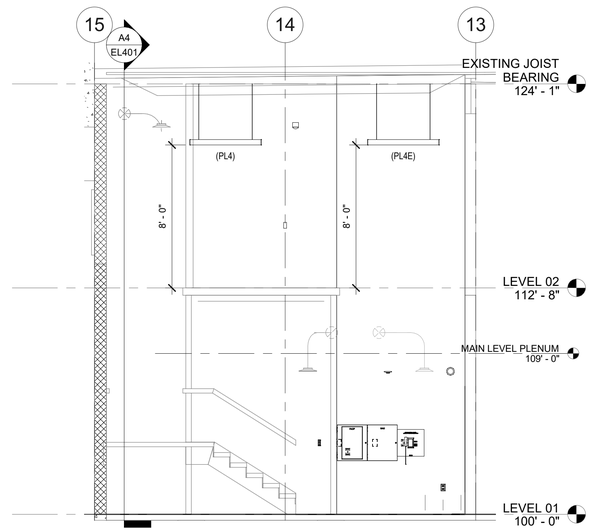

C4 SOUTH STAIR SECTION 2
SCALE: 1/4" = 1'-0"

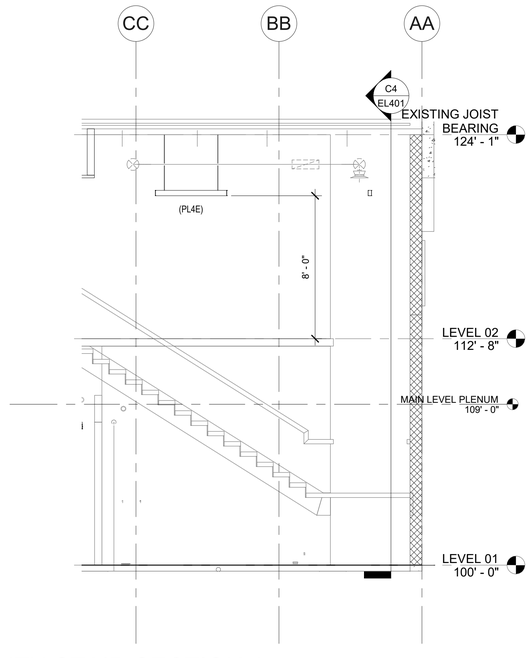

A4 SOUTH STAIR SECTION 1
SCALE: 1/4" = 1'-0"

ARCHITECT 1877

ajc architects

703 east 1700 south
salt lake city, utah 84105
ph: 801.466.8818
fx: 801.466.4411
www.ajcarchitects.com

CENSED PROFESSIONAL ENGINEER No. 5497590-2202 Christopher Kelly Kobayashi STATE OF UTAH

10.01.21

CONSULTANT

SPECTRUM ENGINEERS

324 S. State St., Suite 400
Salt Lake City, UT 84111
800-678-7077
801-328-5151
fax: 801-328-5155
www.spectrum-engineers.com

OWNER INFORMATION

PROJECT DESCRIPTION

DUMKE GYMNASTICS TRAINING CENTER:

1825 E. SOUTH CAMPUS DRIVE
SALT LAKE CITY, UT 84112

AHJ STAMP

SHEET NAME:

LIGHTING SECTIONS

REVISIONS

MARK	DATE	DESCRIPTION

ISSUE DATA

ISSUE DATE:	10.01.21
ISSUE TYPE:	CD
DRAWN BY:	IBC
CHECKED BY:	LSK
PROJECT#:	1877

SHEET NUMBER:

EL401

10/3/2021 1:33:24 PM C:\Users\ibc\Desktop\Revit Local Files\2020\20191093 ELEC Central_IBC-Spectrum.rvt

ALL IDEAS, DESIGNS, ARRANGEMENTS AND PLANS INDICATED OR REPRESENTED BY THIS DRAWING ARE OWNED BY AND THE PROPERTY OF AJC ARCHITECTS PC AND WERE CREATED, EVOLVED AND DEVELOPED FOR USE ON AND IN CONNECTION WITH THE SPECIFIED PROJECT. NONE OF THE IDEAS, DESIGNS, ARRANGEMENTS OR PLANS SHALL BE USED BY OR DISCLOSED TO ANY PERSON, FIRM, OR CORPORATION FOR ANY PURPOSE WHATSOEVER WITHOUT WRITTEN CONSENT OF AJC ARCHITECTS PC. WRITTEN DIMENSIONS ON THESE DRAWINGS SHALL HAVE PRECEDENCE OVER SCALE DIMENSIONS. CONTRACTORS SHALL VERIFY AND BE RESPONSIBLE FOR ALL DIMENSIONS AND CONDITIONS ON THE JOB AND THIS OFFICE MUST BE NOTIFIED OF ANY VARIATION FROM THE DIMENSIONS AND CONDITIONS SHOWN BY THESE DRAWINGS. WARNING: REPRODUCTION HEREOF IS A CRIMINAL OFFENSE UNDER 18 U.S.C. SEC. 506. UNAUTHORIZED DISCLOSURE MAY CONSTITUTE TRADE SECRET MISAPPROPRIATION IN VIOLATION OF 1C.24-2-31-1 ET. SEQ. AND OTHER LAWS.

INTERIOR LIGHTING FIXTURE SCHEDULE

ABBREVIATIONS

MOUNTING

B - BASE
C - CEILING
F - FLANGE
G - GRID
P - PENDANT
PL POLE
R - RECESSED
S - SURFACE
W - WALL

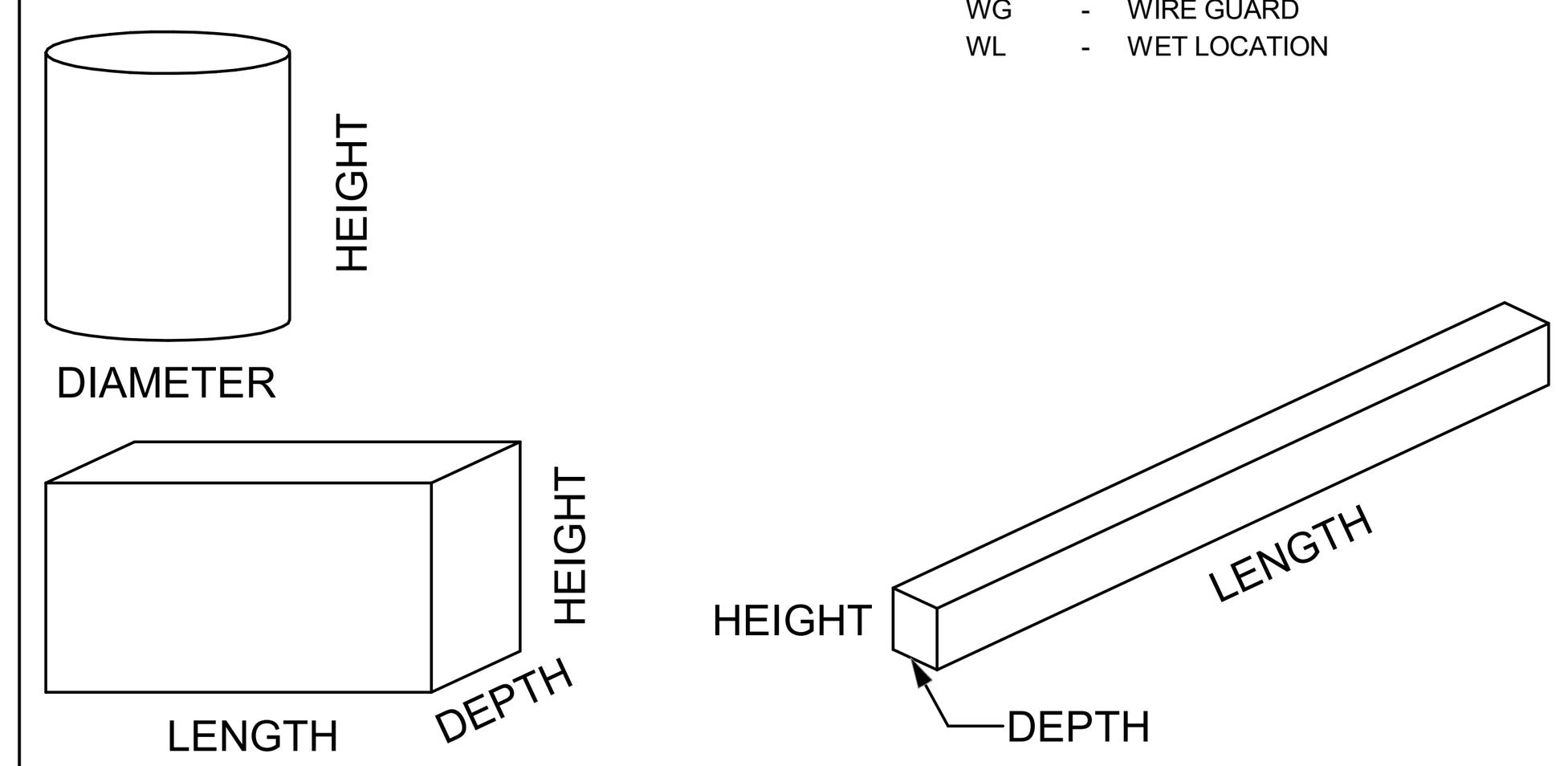

LUMINAIRE OPTIONS

ARHR - AIR RETURN AND HEAT REJECTION
DL - DAMP LOCATION
EB - EMERGNECY BATTERY PACK
EQC - EARTHQUAKE CLIPS
F - FUSING
HLD - HINGED AND LATCHED DOOR
HS - HOUSE SIDE SHIELD
PS - PHOTOCELL SWITCH
QRS - QUARTZ RESTRIKE
ST - STATIC
WG - WIRE GUARD
WL - WET LOCATION

FINISH

MW - MATTE WHITE
BL - BLACK
SL - SILVER
GL - GOLD
CL - CLEAR
PW - PAINTED WHITE
EA - EXTRUDED ALUMINUM
S - STEEL
GS - GALVANIZED STEEL
C - CAST
CBA - COLOR BY ARCHITECT
SCBA - STANDARD COLOR BY ARCHITECT
CCA - CUSTOM COLOR BY ARCHITECT
FS 209D - MEETS FEDERAL STANDARD 209D
TP - THERMALLY PROTECTED
FL - FLUSH
R - REGRESS
M - MITERED

DIFFUSER/LENS

#A - ACRYLIC #THICK
#OA - ACRYLIC #THICK (OPAL)
GC - GLASS (CLEAR)
GO - GLASS (OPAL)
GF - GLASS (FROSTED)
SGL - SOFT GLOW LENS
HPL - HIGH PERFORMANCE LENS
DO - DROP OPAL
CGL - CONVEX GLASS LENS
S - SATIN LENS

REFLECTOR

OP - NONE/OPEN
SP - SPECULAR
SS - SEMI-SPECULAR
D - DIFFUSE (WHITE ENAMEL)
SC - SPECULAR (COLORED)
PR - PRISMATIC
FDR - FULL DEPTH REFLECTOR
DS - DIFFUSE (SEMI SPECULAR) SILVER
LI - LOW IRIDESCENT
IR - IRIDESCENT
SL - SILVER
GL - GOLD
CA - CLEAR ALZAK

NOTES

1 PROVIDE EMERGENCY BATTERY PACK FOR EXISTING LIGHT FIXTURE.

GENERAL NOTES

1. PROVIDE UNIT PRICES AND FIXTURE BRAND SELECTED FOR ADD/DELETE CHANGES FOR EACH FIXTURE TYPES SHOWN WITHIN 48 BUSINESS HOURS OF THE BID DATE. FAILURE TO COMPLY WITH THIS REQUIREMENT MAY DISQUALIFY THE PRODUCTS AND EMPOWER THE ENGINEER TO DETERMINE FAIR VALUE FOR FIXTURE AND INSTALLATION CHANGES, WITHOUT FURTHER INPUT FROM THE CONTRACTOR OR INSTALLER.
2. CONTRACTOR ALLOWANCE PRICES ARE ACCURATE WHEN THIS JOB WAS SPECIFIED, CONTRACTOR AND ELECTRICAL DISTRIBUTOR SHALL VERIFY THIS ALLOWANCE AND REPORT ANY PROBLEMS TO THE ENGINEER BEFORE THE BID. ALLOWANCE PRICE MAY OR MAY NOT INCLUDE LAMP(S) OR FREIGHT AS NOTED, AND DO NOT INCLUDE ANY TAXES.
3. SUBSTITUTIONS AND/OR EQUAL FIXTURES MUST RECEIVE APPROVAL PRIOR TO BIDDING, THEY MUST BE SUBMITTED TO THE ENGINEER NO LESS THAN 2 WEEKS PRIOR TO BID OPENING.
4. SAMPLES MUST BE PROVIDED FOR ANY AND ALL FIXTURES UPON A/E REQUEST PRIOR TO RELEASING FIXTURES.
5. ALL FIXTURES SHALL BE LISTED AND APPROVED FOR THEIR INTENDED USE AND LOCATION.
6. VERIFY THE PROPER MOUNTING KITS OR ACCESSORIES TO FACILITATE INSTALLATION AS SHOWN AT EACH LOCATION ON THE DRAWINGS.
7. COMPLY WITH THE "INTERIOR LIGHTING" SECTION OF THE SPECIFICATIONS.
8. REFER TO SPECIFICATIONS FOR IMPORTANT TECHNICAL REQUIREMENTS FOR LIGHTING FIXTURES, DRIVERS, AND LAMPS.
9. ALL LIGHT FIXTURES TO BE EITHER "DLC" OR "LIGHTING FACTS" LISTED OR TO BE APPROVED BY ARCHITECT/ENGINEER AND OWNER.

		NOMINAL SIZE																	MANUFACTURER (CATALOG SERIES)			
ID	DESCRIPTION	LENGTH	DEPTH	HEIGHT	DIAMETER/ APERTURE	MOUNTING	TYPE	COLOR TEMP	CRI	DRIVER CONFIGURATION	VOLTAGE	WATTS	FINISH	FIXTURE LUMENS	DIFFUSER/LENS	REFLECTOR	OPTIONS	NOTES	OPTION 1	OPTION 2	OPTION 3	OPTION 4
(D2)	RECESSED LED 2" DOWN LIGHT	16"	16"	6"	2"	F,R	LED	4000K	80+	LED DRIVER (0-10V DIMMING) 1%	120/277	3	SCBA	250	-	SS	-	-	GOTHAM (INCITO 2)	OR PRIOR APPROVED EQUAL	WAC LIGHTING (R2RD2T)	INTRA LIGHTING (FLEA)
(D4)	RECESSED LED 4" DOWN LIGHT	16"	16"	6"	4"	F,R	LED	4000K	80+	LED DRIVER (0-10V DIMMING) 1%	120/277	15	SCBA	1500	-	SS	-	-	LITHONIA (LDN4)	HALO (HC4)	PRESCOLITEL (LTR-4RD)	WILLIAMS (4DR)
(D4E)	RECESSED LED 4" DOWN LIGHT WITH EMERGENCY BATTERY PACK	16"	16"	6"	4"	F,R	LED	4000K	80+	LED DRIVER (0-10V DIMMING) 1%	120/277	15	SCBA	1500	-	SS	EB	-	LITHONIA (LDN4)	HALO (HC4)	PRESCOLITEL (LTR-4RD)	WILLIAMS (4DR)
(D4W)	RECESSED LED 4" DOWN LIGHT. WET LISTED	16"	16"	6"	4"	F,R	LED	4000K	80+	LED DRIVER (0-10V DIMMING) 1%	120/277	28	SCBA	2300	-	SS	WL	-	LITHONIA (LDN4)	HALO (HC4)	PRESCOLITEL (LTR-4RD)	WILLIAMS (4DR)
(D4WE)	RECESSED LED 4" DOWN LIGHT, WET LISTED, WITH EMERGENCY BATTERY PACK	16"	16"	6"	4"	F,R	LED	4000K	80	LED DRIVER (0-10V DIMMING) 1%	120/277	28	SCBA	2800	-	SS	WL, EB	-	LITHONIA (LDN4)	HALO (HC4)	PRESCOLITEL (LTR-4RD)	WILLIAMS (4DR)
(DA2)	LED RECESSED 2 HEAD DOWNLIGHT	14"	8"	6"	-	F, R	LED	4000K	80+	LED DRIVER (0-10V DIMMING)	120/277	24	SCBA	2500	-	-	-	-	TECH LIGHTING (ELEMENT MULTIPLES)	COOPER (RSA-MRZ)	SOLAVANTI (SCEKLP10)	INTENSE (GRTR2)
(E1)	EXIT SIGN, EDGE LIT, LED, CEILING MOUNTED, RECESSED DRIVER, WITH EMERGENCY BATTERY PACK (SINGLE FACE)	13"	0.5"	12"	-	C	LED	GREEN	-	LED DRIVER	120/277	3	SCBA	0	-	-	EB	-	LITHONIA (EDGR)	EVENLITE (TEX)	COMPASS (CEL)	OR PRIOR APPROVED EQUAL
(E1W)	EXIT SIGN, EDGE LIT, LED, WALL MOUNTED, SURFACE MOUNTED DRIVER, WITH EMERGENCY BATTERY PACK (SINGLE FACE)	13"	0.5"	12"	-	W	LED	GREEN	-	LED DRIVER	120/277	3	SCBA	0	-	-	EB	-	LITHONIA (EDGR)	EVENLITE (TEX)	COMPASS (CEL)	OR PRIOR APPROVED EQUAL
(E2)	EXIT SIGN, EDGE LIT, LED, CEILING MOUNTED, RECESSED DRIVER, WITH EMERGENCY BATTERY PACK (DUAL FACE)	13"	0.5"	12"	-	C	LED	GREEN	-	LED DRIVER	120/277	3	SCBA	0	-	-	EB	-	LITHONIA (EDGR)	EVENLITE (TEX)	COMPASS (CEL)	OR PRIOR APPROVED EQUAL
(G2)	RECESSED TROFFER (2X2)	2'	2'	5"	-	CRG	LED	4000K	80	LED DRIVER (0-10V DIMMING) 1%	120/277	26	CBA	3300	-	-	ST, EQC, HLD	-	LITHONIA (2BLT)	METALUX (22CZ)	COLUMBIA (LCAT22)	WILLIAMS (LT)
(G2E)	RECESSED TROFFER (2X2),WITH EMERGENCY BATTERY PACK	2'	2'	5"	-	CRG	LED	4000K	80	LED DRIVER (0-10V DIMMING) 1%	120/277	26	CBA	3300	-	-	ST, EQC, HLD, EB	-	LITHONIA (2BLT)	METALUX (22CZ)	COLUMBIA (LCAT22)	WILLIAMS (LT)
(G4)	VOLUMETRIC RECESSED TROFFER 2x4 (LED)	4'	2'	6"	-	C,R,G	LED	4000K	80+	LED DRIVER (0-10V DIMMING) 1%	120/277	40	CBA	4800	-	-	ST, EQC, HLD	-	LITHONIA (2BLT)	METALUX (24CZ)	COLUMBIA (LCAT24)	WILLIAMS (LT)
(G4E)	VOLUMETRIC RECESSED TROFFER 2x4 (LED) WITH EMERGENCY BATTERY PACK	4'	2'	6"	-	C,R,G	LED	4000K	80+	LED DRIVER (0-10V DIMMING) 1%	120/77	40	CBA	4800	-	-	ST, EQC, HLD, EB	-	LITHONIA (2BLT)	METALUX (24CZ)	COLUMBIA (LCAT24)	WILLIAMS (LT)
(LR1)	1" RECESSED LINEAR	96"	1"	5"	-	WS	LED	4000K	80+	LED DRIVER (0-10V DIMMING)	120/277	43	CBA	2900	-	-	-	-	ALW (LP1)	NULITE (RF1)	OR PRIOR APPROVED EQUAL	PINNACLE (EV1)
(LR3)	2.5" RECESSED LINEAR	36"	2.5"	2.75"	-	F,R	LED	4000K	80+	LED DRIVER (0-10V DIMMING)	120/277	22	CBA	2100	-	-	-	-	ALW (LP2)	NEO-RAY (S122)	CORONET (RUSH)	PINNACLE (EV2)
(LR4)	2.5" RECESSED LINEAR	48"	2.5"	2.75"	-	F,R	LED	4000K	80+	LED DRIVER (0-10V DIMMING)	120/277	29	CBA	2800	-	-	-	-	ALW (LP2)	NEO-RAY (S122)	LITECONTROL (2L)	PINNACLE (EV2)
(LR4E)	2.5" RECESSED LINEAR WITH EMERGENCY BATTERY PACK	48"	2.5"	2.75"	-	F,R	LED	4000K	80+	LED DRIVER (0-10V DIMMING)	120/277	29	CBA	2800	-	-	EB	-	ALW (LP2)	NEO-RAY (S122)	LITECONTROL (2L)	PINNACLE (EV2)
(LR6)	2.5" RECESSED LINEAR	72"	3.5"	5"	-	WS	LED	4000K	80+	LED DRIVER (0-10V DIMMING)	120/277	43	CBA	2900	-	-	-	-	ALW (LP2)	NEO-RAY (S122)	LITECONTROL (2L)	PINNACLE (EV2)
(LR6E)	2.5" RECESSED LINEAR	72"	3.5"	5"	-	WS	LED	4000K	80+	LED DRIVER (0-10V DIMMING)	120/277	43	CBA	2900	-	-	-	-	ALW (LP2)	NEO-RAY (S122)	LITECONTROL (2L)	PINNACLE (EV2)
(LR12E)	2.5" RECESSED LINEAR WITH EMERGENCY BATTERY PACK	144"	2.5"	2.75"	-	F,R	LED	4000K	80+	LED DRIVER (0-10V DIMMING)	120/277	86	CBA	8400	-	-	EB	-	ALW (LP2)	NEO-RAY (S122)	LITECONTROL (2L)	PINNACLE (EV2)
(LR14E)	2.5" RECESSED LINEAR WITH EMERGENCY BATTERY PACK	168"	2.5"	2.75"	-	F,R	LED	4000K	80+	LED DRIVER (0-10V DIMMING)	120/277	101	CBA	9800	-	-	EB	-	ALW (LP2)	NEO-RAY (S122)	LITECONTROL (2L)	PINNACLE (EV2)
(LRH4)	2.5" RECESSED LINEAR	48"	2.5"	2.75"	-	F,R	LED	4000K	80+	LED DRIVER (0-10V DIMMING)	120/277	36	CBA	3600	-	-	-	-	ALW (LP2)	NEO-RAY (S122)	LITECONTROL (2L)	PINNACLE (EV2)
(LRH4E)	2.5" RECESSED LINEAR WITH EMERGENCY BATTERY PACK	48"	2.5"	2.75"	-	F,R	LED	4000K	80+	LED DRIVER (0-10V DIMMING)	120/277	36	CBA	3600	-	-	EB	-	ALW (LP2)	NEO-RAY (S122)	LITECONTROL (2L)	PINNACLE (EV2)
(LW4)	2.5" WALL MOUNTED LINEAR	48"	2.5"	2.75"	-	S,W	LED	4000K	80+	LED DRIVER (0-10V DIMMING)	120/277	29	CBA	3700	-	-	-	-	ALW (LP2)	NEO-RAY (S122)	LITECONTROL (2L)	PINNACLE (EX2)
(P1)	SPHERE PENDANT	-	-	6'	3"	CP	LED	4000K	80+	LED DRIVER (0-10V DIMMING)	120/277	8	CBA	400	-	-	-	-	TECH LIGHTING (AUDRA)	OR PRIOR APPROVED EQUAL	OR PRIOR APPROVED EQUAL	PABLO (BOLA)
(P2)	LED PENDANT	55"	28"	15"	-	P	LED	3000K	90+	LED DRIVER (0-10V DIMMING)	120/277	46	CBA	1245			-	-	MODERN FORMS (KRYPTONITE)	OR PRIOR APPROVED EQUAL	ZANEEN (D10-1691)	
(PL4)	LINEAR PENDANT DIRECT	4'	2"	3"	-	CP	LED	4000K	80+	LED DRIVER (0-10V DIMMING) 1%	120/277	41	CBA	2000	-	-	-	-	ALW (LP2)	NEO RAY (S122)	LITECONTROL (2L)	PINNACLE (EX2)
(PL4E)	LINEAR PENDANT DIRECT WITH EMERGENCY BATTERY PACK	4'	2"	3"	-	CP	LED	4000K	80+	LED DRIVER (0-10V DIMMING) 1%	120/277	41	CBA	2000	-	-	EB	-	ALW (LP2)	NEO RAY (S122)	LITECONTROL (2L)	PINNACLE (EX2)
(PR60)	RING PENDANT - 60"	-	-	4.25"	60"	P	LED	4000K	80+	LED DRIVER (0-10V DIMMING) 10%	120/277	58	CBA	5900	-	-	-	-	ALW (MR3)	PMC LIGHTING (ARC X)	SOLAVANTI (HALO)	BATACALCO (RING)
(RT24)	UV LED 2X4 TROFFER (EXISTING LIGHT TO BE RELOCATED, FOR REFERENCE ONLY)	48"	24"	4"	-	C	LED	4000K	80	LED DRIVER (0-10V DIMMING)	120/277	162	CBA	12391	-	-	EB	1	KENALL (INDIGO-CLEAN M4SEDIC)	-	-	-
(S1)	LED SPOT LIGHT	-	-	7"	5.25"	S	LED	4000K	80	LED DRIVER PHASE DIMMING	120/277	10	CBA	750	-	-	-	-	TECH LIGHTING (CHAPARRAL SM LED)	VISTA PRO (1043)	OR PRIOR APPROVED EQUAL	HOLM (DCST-9)
(S4)	GENERAL LED STRIP LIGHT WITH SUSPENSION CABLES	4'	2"	2"	-	S,P	LED	4000K	80+	LED DRIVER (0-10V DIMMING) 10%	120/277	25	WH	3000	-	-	-	-	LITHONIA (ZL1N)	METALUX (SNLED)	COLUMBIA (MPS)	WILLIAMS (75R)
(S4P)	GENERAL LED STRIP LIGHT WITH SUSPENSION CABLES & INTERGRAL PHOTOCELL	4'	2"	2"	-	S,P	LED	4000K	80+	LED DRIVER (0-10V DIMMING) 10%	120/277	25	WH	3000	-	-	PS	-	LITHONIA (ZL1N)	METALUX (SNLED)	COLUMBIA (MPS)	WILLIAMS (75R)
(V1)	WALL MOUNTED VANITY LIGHT	4'	4"	5"	-	W	LED	4000K	80+	LED DRIVER	120/277	39	WH	4000	-	-	-	-	TECH LIGHTING (LUFE ROUND 48 BATH)	OXYGEN (ZENITH II)	ASL (VBEB)	LED-C4 (05-654-21-M1U)
(WA4)	LED LINEAR WRAP, ELEVATOR PIT	4'	3.2"	5"	-	W	LED	4000K	80+	LED DRIVER	120/277	28	WH	3000	-	-	-	-	LITHONIA (WL4)	METALUX (BCLED)	OR PRIOR APPROVED EQUAL	WILLIAMS (SLF)
(WW1)	WALL WASH - 1" RECESSED LINEAR	96"	2"	2.75"	-	WS	LED	4000K	80+	LED DRIVER (0-10V DIMMING)	120/277	38	CBA	2400	-	-	-	-	ALW (LP2)	NEO-RAY (S122)	LITECONTROL (2L)	PINNACLE (EV1)
(WW2)	WALL WASH - 1" RECESSED LINEAR	72"	2"	2.75"	-	WS	LED	4000K	80+	LED DRIVER (0-10V DIMMING)	120/277	28	CBA	1800	-	-	-	-	ALW (LP2)	NEO-RAY (S122)	LITECONTROL (2L)	PINNACLE (EV1)
(WW3)	WALL WASH - 1" RECESSED LINEAR	168"	2"	2.75"	-	WS	LED	4000K	80+	LED DRIVER (0-10V DIMMING)	120/277	66	CBA	4200	-	-	-	-	ALW (LP2)	NEO-RAY (S122)	LITECONTROL (2L)	PINNACLE (EV1)

ARCHITECT 1877
ajc architects
703 east 1700 south
salt lake city, utah 84105
ph: 801.466.8818
fx: 801.466.4411
www.ajcarchitects.com

LICENSED PROFESSIONAL ENGINEER
No. 5497590-2202
Christopher Kelly Kobayashi
STATE OF UTAH
10.01.21

CONSULTANT
SPECTRUM ENGINEERS
324 S. State St., Suite 400
Salt Lake City, UT 84111
800-678-7077
801-328-5151
fax: 801-328-5155
www.spectrum-engineers.com

OWNER INFORMATION

PROJECT DESCRIPTION

DUMKE GYMNASTICS TRAINING CENTER:

1825 E. SOUTH CAMPUS DRIVE
SALT LAKE CITY, UT 84112

AHJ STAMP

SHEET NAME:

INTERIOR LIGHTING FIXTURE SCHEDULE

REVISIONS

MARK DATE DESCRIPTION

ISSUE DATA

ISSUE DATE: 10.01.21
ISSUE TYPE: CD
DRAWN BY: IBC
CHECKED BY: LSK
PROJECT#: 1877

SHEET NUMBER:

EL601

10/3/2021 1:33:21 PM C:\Users\ibc\Desktop\Revit Local Files\2020\20191093 ELEC Central_IBC-Spectrum.rvt

ALL IDEAS, DESIGNS, ARRANGEMENTS AND PLANS INDICATED OR REPRESENTED BY THIS DRAWING ARE OWNED BY AND THE PROPERTY OF AJC ARCHITECTS PC AND WERE CREATED, EVOLVED, AND DEVELOPED FOR USE ON AND IN CONNECTION WITH THE SPECIFIED PROJECT. NONE OF THE IDEAS, DESIGNS, ARRANGEMENTS OR PLANS SHALL BE USED BY OR DISCLOSED TO ANY PERSON, FIRM, OR CORPORATION FOR ANY PURPOSE WHATSOEVER WITHOUT WRITTEN CONSENT OF AJC ARCHITECTS PC. WRITTEN DIMENSIONS ON THESE DRAWINGS SHALL HAVE PRECEDENCE OVER SCALE DIMENSIONS. CONTRACTORS SHALL VERIFY AND BE RESPONSIBLE FOR ALL DIMENSIONS AND CONDITIONS ON THE JOB AND THIS OFFICE MUST BE NOTIFIED OF ANY VARIATION FROM THE DIMENSIONS AND CONDITIONS SHOWN BY THESE DRAWINGS. WARNING: REPRODUCTION HEREOF IS A CRIMINAL OFFENSE UNDER 18 U.S.C. SEC. 506. UNAUTHORIZED DISCLOSURE MAY CONSTITUTE TRADE SECRET MISAPPROPRIATION IN VIOLATION OF I.C.24-2-31-1 ET. SEQ. AND OTHER LAWS.

EXTERIOR LIGHTING FIXTURE SCHEDULE

ABBREVIATIONS

LUMINAIRE

ARHR	-	AIR RETURN AND HEAT REJECTION
DL	-	DAMP LOCATION
EB	-	EMERGNECY BATTERY PACK
EQC	-	EARTHQUAKE CLIPS
F	-	FUSING
HLD	-	HINGED AND LATCHED DOOR
HS	-	HOUSE SIDE SHIELD
PS	-	PHOTOCELL SWITCH
QRS	-	QUARTZ RESTRIKE
ST	-	STATIC
WG	-	WIRE GUARD
WL	-	WET LOCATION

MOUNTING

B	-	BASE
C	-	CEILING
F	-	FLANGE
G	-	GRID
P	-	PENDANT
PL	-	POLE
R	-	RECESSED
S	-	SURFACE
W	-	WALL

CONFIGURATION

BA	-	BANNER ARMS
BH	-	BULL HORN
DL	-	2 "L" SHAPE
DS	-	2 @ 180
PT	-	INLINE POST TOP
Q	-	QUAD
SH	-	SHEPHERDS HOOK
SL	-	SINGLE
T	-	3 "T" SHAPE

POLE

RS	-	ROUND STRAIGHT
RT	-	ROUND TAPERED
SS	-	SQUARE STRAIGHT
ST	-	SQUARE TAPERED

EMERGENCY

NE	-	NORMAL AND EMERGENCY CONNECTIONS
EB	-	EMERGENCY BATTERY PACK
ET	-	EMERGENCY TRANSFER DEVICE

BALLAST

IS	-	INSTANT START
RS	-	RAPID START
PS	-	PROGRAM START, PARALLEL LAMP OPERATION
PSMH	-	PULSE START METAL HALLIDE (CWA OR ELECTRONIC)
PPLF	-	PROVIDE POWER LINE FILTER
LVTM	-	LOW VOLTAGE TRANSFORMER (MAGNETIC)
LVTE	-	LOW VOLTAGE TRANSFORMER (ELECTRONIC)

DIMMING BALLAST

D2	-	2 WIRE DIMMER
D3	-	3 WIRE DIMMER
D4	-	4 WIRE DIMMER
DD	-	DIGITAL DIMMER
SDP	-	STEP DIMMER BALLAST

FINISH

MW	-	MATTE WHITE
BL	-	BLACK
SL	-	SILVER
GL	-	GOLD
CL	-	CLEAR
PW	-	PAINTED WHITE
EA	-	EXTRUDED ALUMINUM
S	-	STEEL
GS	-	GALVANIZED STEEL
C	-	CAST
CBA	-	COLOR BY ARCHITECT
SCBA	-	STANDARD COLOR BY ARCHITECT
CCA	-	CUSTOM COLOR BY ARCHITECT
FS 209D	-	MEETS FEDERAL STANDARD 209D
TP	-	THERMALLY PROTECTED
FL	-	FLUSH
R	-	REGRESS
M	-	MITERED

LENS

#A	-	ACRYLIC #THICK
#OA	-	ACRYLIC #THICK (OPAL)
GC	-	GLASS (CLEAR)
GO	-	GLASS (OPAL)
GF	-	GLASS (FROSTED)
SGL	-	SOFT GLOW LENS
HPL	-	HIGH PERFORMANCE LENS
DO	-	DROP OPAL
CGL	-	CONVEX GLASS LENS
S	-	SATIN LENS

REFLECTOR AND DISTRIBUTION

I	-	TYPE I
II	-	TYPE II
III	-	TYPE III
IV	-	TYPE IV
V	-	TYPE V
VSQ	-	TYPE V SQUARE
SA	-	SPUN ALLUMINUM
SR	-	SEGMENTED REFLECTOR
BW#	-	NEMA BEAM WIDTH 1 THRU 7

CUTOFF CLASSIFICATION

FC	-	FULL CUTOFF
CO	-	CUTTOFF
SC	-	SEMI CUTOFF
NC	-	NONCUTOFF

NOTES

1. PROVIDE UNIT PRICES AND FIXTURE BRAND SELECTED FOR ADD/DELETE CHANGES FOR EACH FIXTURE TYPES SHOWN WITHIN 48 BUSINESS HOURS OF THE BID DATE. FAILURE TO COMPLY WITH THIS REQUIREMENT MAY DISQUALIFY THE PRODUCTS AND EMPOWER THE ENGINEER TO DETERMINE FAIR VALUE FOR FIXTURE AND INSTALLATION CHANGES, WITHOUT FURTHER INPUT FROM THE CONTRACTOR OR INSTALLER.
2. CONTRACTOR ALLOWANCE PRICES ARE ACCURATE WHEN THIS JOB WAS SPECIFIED, CONTRACTOR AND ELECTRICAL DISTRIBUTOR SHALL VERIFY THIS ALLOWANCE AND REPORT ANY PROBLEMS TO THE ENGINEER BEFORE THE BID. ALLOWANCE PRICE MAY OR MAY NOT INCLUDE LAMP(S) OR FREIGHT AS NOTED, AND DO NOT INCLUDE ANY TAXES.

1. VERIFY THE PROPER MOUNTING KITS OR ACCESSORIES TO FACILITATE INSTALLATION AS SHOWN AT EACH LOCATION ON THE DRAWINGS.
2. COMPLY WITH THE "EXTERIOR LIGHTING" SECTION OF THE SPECIFICATIONS.
3. REFER TO SPECIFICATIONS FOR IMPORTANT TECHNICAL REQUIREMENTS FOR LIGHTING FIXTURES, BALLASTS, AND LAMPS.
4. ALL FIXTURES SHALL BE APPROVED BY UL OR ANOTHER ACCEPTABLE TESTING LAB FOR THE PURPOSE INTENDED AND WITH THE LAMP AND BALLAST PROPOSED.

		LUMINAIRE								LAMP				DRIVER		FINISH		LENS	REFLECTOR	MOUNTING						MANUFACTURER (CATALOG SERIES)			
		BUG RATING			SIZE (NOMINAL)																								
ID	TYPE	BACK	UP	GLARE	LENGTH	WIDTH	DEPTH	DIAMETER/ APERTURE	OPTIONS	COLOR	TYPE	INITIAL LUMENS @ 1.0BF	QUANTITY	INPUT VOLTS	ANSI WATTS	HOUSING	TRIM	TYPE	DISTRIBUTION TYPE	TYPE	CONFIGURATION	POLE BASE HEIGHT	POLE HEIGHT	WIND RATING	OPTIONS	OPTION 1	OPTION_2	OPTION 3	OPTION 4
(W1E)	WALL SCONCE WITH EMERGENCY BATTERY PACK	0	0	1	11"	9.5"	2"	-	-	4000K	LED	1500	1	277	18	-	-	-	III	W	-	0' - 0"	0' - 0"	-	EB	LITHONIA (DSXW1)	OR PRIOR APPROVED EQUAL	OR PRIOR APPROVED EQUAL	VISIONARE LIGHTING (VSC-II)

ARCHITECT 1877

ajc architects

703 east 1700 south
salt lake city, utah 84105
ph: 801.466.8818
fx: 801.466.4411
www.ajcarchitects.com

LICENSED PROFESSIONAL ENGINEER
No. 5497590-2202
Christopher Mark Kirk
STATE OF UTAH

10.01.21

CONSULTANT

SPECTRUM ENGINEERS

324 S. State St., Suite 400
Salt Lake City, UT 84111
800-678-7077
801-328-5151
fax: 801-328-5155
www.spectrum-engineers.com

OWNER INFORMATION

PROJECT DESCRIPTION

DUMKE GYMNASTICS TRAINING CENTER:

1825 E. SOUTH CAMPUS DRIVE
SALT LAKE CITY, UT 84112

AHJ STAMP

SHEET NAME:

EXTERIOR LIGHTING FIXTURE SCHEDULE

REVISIONS

MARK	DATE	DESCRIPTION

ISSUE DATA

ISSUE DATE:	10.01.21
ISSUE TYPE:	CD
DRAWN BY:	IBC
CHECKED BY:	LSK
PROJECT#:	1877

SHEET NUMBER:

EL602

10/3/2021 1:33:16 PM C:\Users\ibc\Desktop\Revit Local Files\2020\20191093 ELEC Central_IBC-Spectrum.rvt

ALL IDEAS, DESIGNS, ARRANGEMENTS AND PLANS INDICATED OR REPRESENTED BY THIS DRAWING ARE OWNED BY AND THE PROPERTY OF AJC ARCHITECTS PC AND WERE CREATED, EVOLVED, AND DEVELOPED FOR USE ON AND IN CONNECTION WITH THE SPECIFIED PROJECT. NONE OF THE IDEAS, DESIGNS, ARRANGEMENTS OR PLANS SHALL BE USED BY OR DISCLOSED TO ANY PERSON, FIRM OR CORPORATION FOR ANY PURPOSE WHATSOEVER WITHOUT WRITTEN CONSENT OF AJC ARCHITECTS PC. WRITTEN DIMENSIONS ON THESE DRAWINGS SHALL HAVE PRECEDENCE OVER SCALE DIMENSIONS. CONTRACTORS SHALL VERIFY AND BE RESPONSIBLE FOR ALL DIMENSIONS AND CONDITIONS ON THE JOB AND THIS OFFICE MUST BE NOTIFIED OF ANY VARIATION FROM THE DIMENSIONS AND CONDITIONS SHOWN BY THESE DRAWINGS. WARNING: REPRODUCTION HEREOF IS A CRIMINAL OFFENCE UNDER 18 U.S.C. SEC. 506. UNAUTHORIZED DISCLOSURE MAY CONSTITUTE TRADE SECRET MISAPPROPRIATION IN VIOLATION OF 12.24.2-11 ET. SEQ. AND OTHER LAWS

ALL IDEAS, DESIGNS, ARRANGEMENTS AND PLANS INDICATED OR REPRESENTED BY THIS DRAWING ARE OWNED BY AND THE PROPERTY OF AJC ARCHITECTS PC AND WERE CREATED, EVOLVED, AND DEVELOPED FOR USE ON AND IN CONNECTION WITH THE SPECIFIED PROJECT. NONE OF THE IDEAS, DESIGNS, ARRANGEMENTS OR PLANS SHALL BE USED BY OR DISCLOSED TO ANY PERSON, FIRM OR CORPORATION FOR ANY PURPOSE WHATSOEVER WITHOUT WRITTEN CONSENT OF AJC ARCHITECTS PC. WRITTEN DIMENSIONS ON THESE DRAWINGS SHALL HAVE PRECEDENCE OVER SCALE DIMENSIONS. CONTRACTORS SHALL VERIFY AND BE RESPONSIBLE FOR ALL DIMENSIONS AND CONDITIONS ON THE JOB AND THIS OFFICE MUST BE NOTIFIED OF ANY VARIATION FROM THE DIMENSIONS AND CONDITIONS SHOWN BY THESE DRAWINGS. WARNING: REPRODUCTION HEREOF IS A CRIMINAL OFFENSE UNDER 18 U.S.C. SEC. 506. UNAUTHORIZED DISCLOSURE MAY CONSTITUTE TRADE SECRET MISAPPROPRIATION IN VIOLATION OF 17-24.3 (H.) ET. SEQ. AND OTHER LAWS.

10/3/2021 1:33:09 PM C:\Users\ibc\Desktop\Revit Local Files\2020\20191093 ELEC Central_IBC-Spectrum.rvt

LOW VOLTAGE PUSH-BUTTON SCHEDULE

SWITCH ID: CS-1

LV SWITCH	BUTTON	ZONES & DIMMING/ROOM CONTROLLERS TO BE CONTROLLED	CONTROL DESCRIPTION	LABEL ID
2-BUTTON	1	LEVEL 1 CORRIDOR/COMMON SPACE LIGHTING ON	MANUAL OVERRIDE ON FOR 2 HRS	LVL 1
	2	LEVEL 2 CORRIDOR/COMMON SPACE LIGHTING OFF	MANUAL OVERRIDE ON FOR 2 HRS	LVL 2

LOW VOLTAGE PUSH-BUTTON SCHEDULE

SWITCH ID: CS-2

LV SWITCH	BUTTON	ZONES/RELAYS CONTROLLED	CONTROL DESCRIPTION	LABEL ID
6-BUTTON	1	ALL LEVELS (1 & 2) CORRIDOR/COMMON SPACE LIGHTING ON	MANUAL ON	BLDG ALL ON
	2	ALL LEVELS (1 & 2) CORRIDOR/COMMON SPACE LIGHTING OFF	MANUAL OFF	BLDG ALL OFF
	3	EXTERIOR BUILDING MOUNTED LIGHTING ON	MANUAL ON	BLDG EXT ON
	4	EXTERIOR BUILDING MOUNTED LIGHTING OFF	MANUAL OFF	BLDG EXT OFF
	5	SPARE TO BE PROGRAMMED AS DIRECTED BY OWNER	PROGRAM AS DIRECTED BY OWNER	
	6	SPARE TO BE PROGRAMMED AS DIRECTED BY OWNER	PROGRAM AS DIRECTED BY OWNER	

APPROVED LIGHTING CONTROLS MANUFACTURERS	GENERAL REQUIREMENTS AND NOTES
1. WATTSTOPPER (BASIS OF DESIGN) 2. NLIGHT 3. CRESTRON	1. COORDINATE INITIAL PROGRAMMING REQUIREMENTS AND SETTINGS WITH OWNER AND MODIFY PROGRAMMING, CONTROL TIMES, AND OPERATION AS DIRECTED BY OWNER. 2. PROVIDE FINE TUNING PROGRAMMING AND ADJUSTMENTS AS DIRECTED BY OWNER WITHIN THE FIRST 3 TO 6 MONTHS AFTER SUBSTATIAL COMPLETION AND BUILDING OCCUPANCY. 3. PROVIDE CUSTOMIZED PERMANENT ENGRAVED BUTTON LABELING ON EACH OVERRIDE SWITCH. LABEL FOR EACH BUTTON SHALL CLEARLY INDICATE FUNCTION OF BUTTON OR ZONE SERVED. 4. PART NUMBERS SHOWN ARE BASED ON THE BASIS OF DESIGN MANUFACTURER NOTED. 5. THE CONTRACTOR IS RESPONSIBLE TO PROVIDE A COMPLETE FUNCTIONING LIGHITNG CONTROL SYSTEM MEETING ALL PROJECT REQUIREMENTS, DESIGN INTENT AND FEATURES/FUNCTIONS OF THE BASIS OF DESIGN PRODUCTS. 6. LIGHTING CONTROL PANEL SHALL EITHER BE FACTORY OR UL508 SHOP ASSEMBLED INCLUDING ALL REQUIRED COMPONENTS SUCH AS, BUT NOT LIMITED TO ENCLOSURE, POWER SUPPLIES, RELAYS, DIMMING MODULES, TERMINAL BLOCKS, SIGNAL INTERFACE, PROCESSOR, TIMECLOCK, WIRE MANAGEMENT, ETC. CONTRACTOR OR FIELD BUILT LIGHTING CONTROL PANELS WILL NOT BE PERMITTED. 7. THE LIGHTING CONTROL PANEL AND SEGMENT MANAGER MUST BE NETWORKED TOGETHER AND SHALL PROVIDE ALL FEATURES AND FUNCTIONS AVAILABLE TO THE LIGHTING CONTROL SYSTEM THROUGH THE NETWORK.

NETWORK LIGHTING CONTROL DIAGRAM

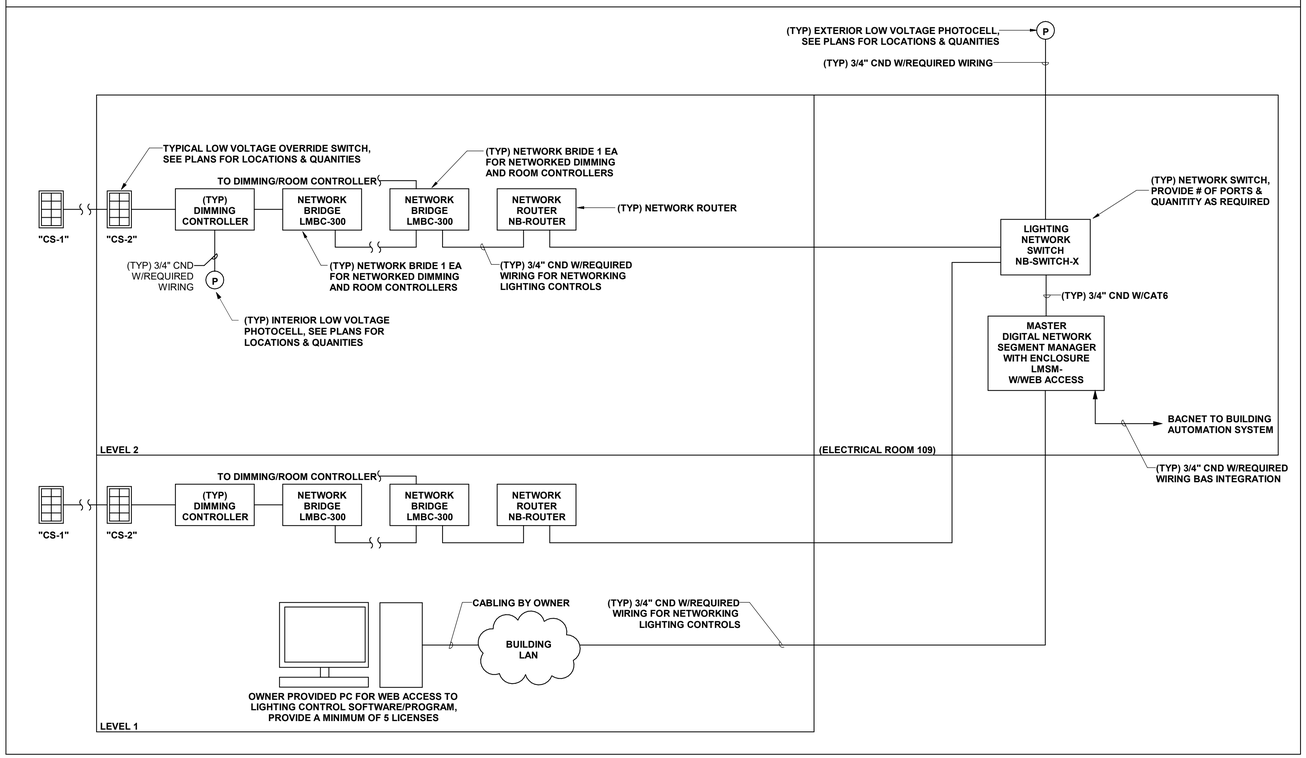

A1 NETWORK LIGHTING CONTROL DIAGRAM
SCALE: NTS

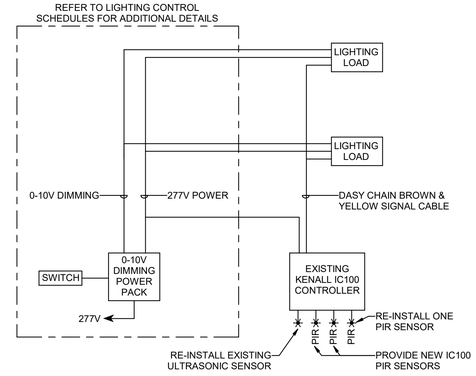

B4 UV LIGHT FIXTURE WIRING DIAGRAM
SCALE: NTS

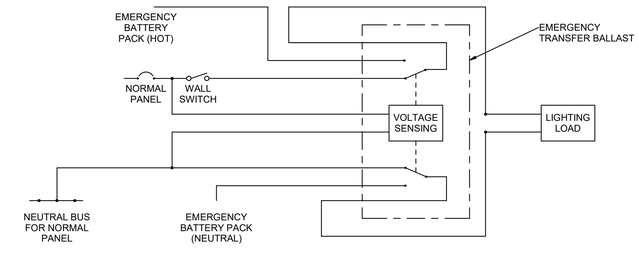

NORMAL OPERATION
LIGHTING LOAD CONTROLLED BY LOCAL SWITCHING MEANS.

EMERGENCY OPERATION
LIGHTING LOAD IS INDEPENDENT OF LOCAL SWITCHING MEANS.

A4 EMERGENCY LIGHTING REMOTE BATTTERY DETAIL
SCALE: NTS

ARCHITECT 1877
ajc architects
703 east 1700 south
salt lake city, utah 84105
ph: 801.466.8818
fx: 801.466.4411
www.ajcarchitects.com
LICENSED PROFESSIONAL ENGINEER No. 5497590-2202 Christopher Mark Kapchinski STATE OF UTAH
10.01.21

CONSULTANT
SPECTRUM ENGINEERS
324 S. State St., Suite 400
Salt Lake City, UT 84111
800-678-7077
801-328-5151
fax: 801-328-5155
www.spectrum-engineers.com

OWNER INFORMATION

PROJECT DESCRIPTION

DUMKE GYMNASTICS TRAINING CENTER:

1825 E. SOUTH CAMPUS DRIVE
SALT LAKE CITY, UT 84112

AHJ STAMP

SHEET NAME:
NETWORK LIGHTING CONTROL DIAGRAM & RISERS

REVISIONS

MARK	DATE	DESCRIPTION

ISSUE DATA

ISSUE DATE:	10.01.21
ISSUE TYPE:	CD
DRAWN BY:	IBC
CHECKED BY:	LSK
PROJECT#:	1877

SHEET NUMBER:
EL603

LIGHTING/SPACE CONTROL TYPE SCHEDULE

WIRING LEGEND

- ——— LINE VOLTAGE WIRING
- - - - - 0-10V WIRING
- ·-·-·-· CAT5E CABLING
- ——— WIRING BY OTHERS
- —O—O— TMP SEGMENT NETWORK CABLING

APPROVED MANUFACTURERS

1. WATTSTOPPER (BASIS OF DESIGN)
2. NLIGHT
3. DOUGLAS LIGHTING CONTROLS
4. GREENGATE
5. CRESTRON

LIGHTING CONTROL ID

1. # = NUMBER OF ZONES
2. D = DIMMING, S = SWITCHING
3. P = DAYLIGHT PHOTOCELL
4. L = PLUG LOAD CONTROLLER
5. # = INSTANCE

GENERAL NOTES

1. COORDINATE INITIAL PROGRAMMING WITH OWNER AND MODIFY CONTROL TIMES AND OPERATION AS REQUESTED BY OWNER.
2. PROVIDE FINE TUNING PROGRAMMING AND ADJUSTMENTS UPON REQUEST BY OWNER WITHIN FIRST 6 MONTHS AFTER SUBSTANTIAL COMPLETION.
3. PROVIDE CUSTOMIZED ENGRAVED PERMANENT BUTTON LABELS ON EACH SWITCH, LABEL TO MATCH BUTTON LABEL ID OR AS DIRECTED BY OWNER.
4. PART NUMBERS SHOWN ARE BASED ON WATTSTOPPER AS THE BASIS OF DESIGN. ALL APPROVED MANUFACTURERS ARE SUBJECT TO MEETING ALL FUNCTIONS AND CAPABILITIES OF THE BASIS OF DESIGN SYSTEM AND PRODUCTS. FAILURE TO MEET THESE SHALL REQUIRE THE CONTRACTOR TO PROVIDE A SYSTEM THAT DOES AT NOT ADDITIONAL COST.

GENERAL NOTES

5. REFER TO PLANS FOR LOCATIONS AND QUANTITIES OF DEVICES.
6. INSTALL ONE OF EACH CONTROL TYPE WITH PROGRAMMING, ADJUST, AND OBTAIN OWNERS APPROVAL PRIOR TO PROGRAMMING THE REMAINING CONTROLS.
7. WIRING MAY VARY BETWEEN MANUFACTURERS. CONTRACTOR IS RESPONSIBLE FOR PROVIDING THE REQUIRED WIRING THAT WILL BOTH MEET THE MANUFACTURERS REQUIREMENTS AND MATCH WITH THE SHOWN SYSTEM.
8. PROVIDE COMPLETE SHOP DRAWING SUBMITTALS INCLUDING OCCUPANCY SENSOR LAYOUT AND COVERAGE PATTERNS. PROVIDE ADDITIONAL SENSORS AS REQUIRED FOR 100% COVERAGE OF SPACES WITH OCCUPANCY SENSOR CONTROL.

ID / DETAIL	LIGHTS ON CONTROL	LIGHTS OFF CONTROL	LIGHTING CONTROL TYPE	DAYLIGHT SENSOR SETTING (FC)	TIME DELAY TO OFF (MIN.)	BAS AUX RELAY SIGNAL	PLUG LOAD CONTROLLER	NETWORKED CONTROLS	BUTTON_1	BUTTON_2	BUTTON_3	BUTTON_4	BUTTON_5	BUTTON_6	BUTTON_7	BUTTON_8	BUTTON_9	NOTES
1D1 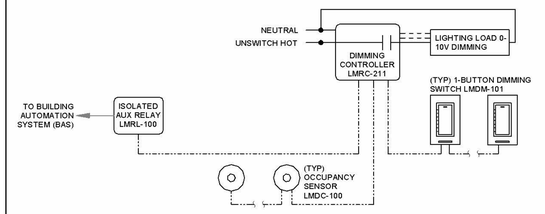	MANUAL & OCCUPANCY	MANUAL OR OCCUPANCY	DIMMING 0-10V	-	15	RELAY CLOSED ON OCCUPANCY	-	-	FUNCTION: PRESS TOP-ON, HOLD TOP-RAISE LABEL ID: TOP-"ON/RAISE" BOTTOM-"OFF/ LOWER"	-	-	-	-	-	-	-	-	-	
1DP1 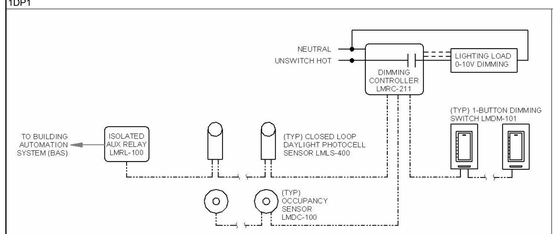	MANUAL & OCCUPANCY	MANUAL OR OCCUPANCY	DIMMING 0-10V	30	15	RELAY CLOSED ON OCCUPANCY	-	-	FUNCTION: PRESS TOP-ON, HOLD TOP-RAISE LABEL ID: TOP-"ON/RAISE" BOTTOM-"OFF/ LOWER"	-	-	-	-	-	-	-	-	-	
1DP4 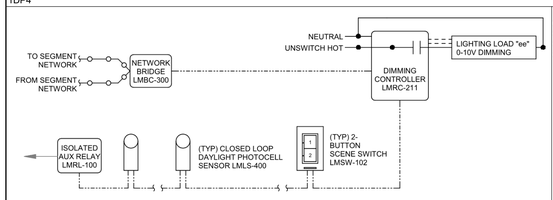	TIME ON AT 6AM MON-SAT, CAN MANUAL OVER-RIDE ON FOR 2HRS	TIME OFF AT 11PM DAILY, BLINK LIGHTS 10 MIN WARNING	DIMMING 0-10V	30	-	-	-	YES	REFER TO COMMON SPACE/ EXTERIOR LOW VOLTAGE SWITCH CONTROL SCHEDULES	-	-	-	-	-	-	-	-	-	
1S1 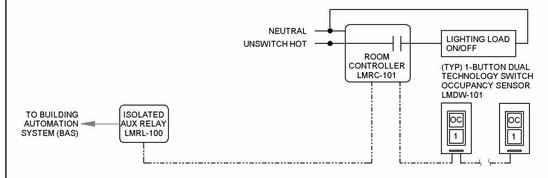	MANUAL & OCCUPANCY	MANUAL OR OCCUPANCY	ON/OFF	-	15	RELAY CLOSED ON OCCUPANCY	-	-	FUNTION: PRESS-ON PRESS-OFF LABEL ID:"ON/OFF"	-	-	-	-	-	-	-	-	-	
1S2 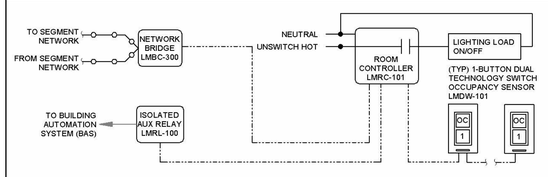	TIME ON AT 6AM MON-SAT, CAN MANUAL OVER-RIDE ON FOR 2HRS	TIME OFF AT 11PM DAILY, BLINK LIGHTS 10 MIN WARNING	ON/OFF	-	15	RELAY CLOSED ON OCCUPANCY	-	-	FUNTION: PRESS-ON PRESS-OFF LABEL ID:"ON/OFF"	-	-	-	-	-	-	-	-	-	
1S3 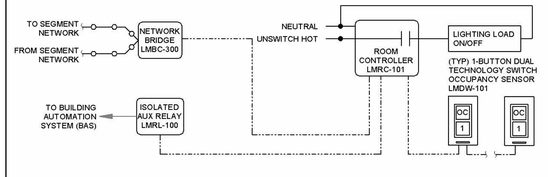	DUSK	DAWN	ON/OFF	-	15	RELAY CLOSED ON OCCUPANCY	-	-	REFER TO COMMON SPACE/ EXTERIOR LOW VOLTAGE SWITCH CONTROL SCHEDULES	-	-	-	-	-	-	-	-	-	

ALL IDEAS, DESIGNS, ARRANGEMENTS AND PLANS INDICATED OR REPRESENTED BY THIS DRAWING ARE OWNED BY AND THE PROPERTY OF AJC ARCHITECTS PC AND WERE CREATED, EVOLVED, AND DEVELOPED FOR USE ON AND IN CONNECTION WITH THE SPECIFIED PROJECT. NONE OF THE IDEAS, DESIGNS, ARRANGEMENTS OR PLANS SHALL BE USED BY OR DISCLOSED TO ANY PERSON, FIRM OR CORPORATION FOR ANY PURPOSE WHATSOEVER WITHOUT WRITTEN CONSENT OF AJC ARCHITECTS PC. WRITTEN DIMENSIONS ON THESE DRAWINGS SHALL HAVE PRECEDENCE OVER SCALE DIMENSIONS. CONTRACTORS SHALL VERIFY AND BE RESPONSIBLE FOR ALL DIMENSIONS AND CONDITIONS ON THE JOB AND THIS OFFICE MUST BE NOTIFIED OF ANY VARIATION FROM THE DIMENSIONS AND CONDITIONS SHOWN BY THESE DRAWINGS. WARNING: REPRODUCTION HEREOF IS A CRIMINAL OFFENCE UNDER 18 U.S.C. SEC. 506. UNAUTHORIZED DISCLOSURE MAY CONSTITUTE TRADE SECRET MISAPPROPRIATION IN VIOLATION OF 17 U.S.C. 1401 ET. SEQ. AND OTHER LAWS.

10/3/2021 1:33:06 PM C:\Users\ibc\Desktop\Revit Local Files\2020\20191093 ELEC Central_IBC-Spectrum.rvt

ARCHITECT 1877

ajc architects

703 east 1700 south
salt lake city, utah 84105
ph: 801.466.8818
fx: 801.466.4411
www.ajcarchitects.com

LICENSED PROFESSIONAL ENGINEER No. 5497590-2202 Christopher Michael Kapchinski STATE OF UTAH

10.01.21

CONSULTANT

SPECTRUM ENGINEERS
324 S. State St., Suite 400
Salt Lake City, UT 84111
800-678-7077
801-328-5151
fax: 801-328-5155
www.spectrum-engineers.com

OWNER INFORMATION

PROJECT DESCRIPTION

DUMKE GYMNASTICS TRAINING CENTER:

1825 E. SOUTH CAMPUS DRIVE
SALT LAKE CITY, UT 84112

AHJ STAMP

SHEET NAME:

LIGHTING CONTROL SCHEDULES

REVISIONS

MARK	DATE	DESCRIPTION

ISSUE DATA

ISSUE DATE:	10.01.21
ISSUE TYPE:	CD
DRAWN BY:	IBC
CHECKED BY:	LSK
PROJECT#:	1877

SHEET NUMBER:

EL604

LIGHTING/SPACE CONTROL TYPE SCHEDULE

WIRING LEGEND

- LINE VOLTAGE WIRING
- 0-10V WIRING
- CAT5E CABLING
- WIRING BY OTHERS
- TMP SEGMENT NETWORK CABLING

APPROVED MANUFACTURERS

1. WATTSTOPPER (BASIS OF DESIGN)
2. NLIGHT
3. DOUGLAS LIGHTING CONTROLS
4. GREENGATE
5. CRESTRON

LIGHTING CONTROL ID

1. # = NUMBER OF ZONES
2. D = DIMMING, S = SWITCHING
3. P = DAYLIGHT PHOTOCELL
4. L = PLUG LOAD CONTROLLER
5. # = INSTANCE

GENERAL NOTES

1. COORDINATE INITIAL PROGRAMMING WITH OWNER AND MODIFY CONTROL TIMES AND OPERATION AS REQUESTED BY OWNER.
2. PROVIDE FINE TUNING PROGRAMMING AND ADJUSTMENTS UPON REQUEST BY OWNER WITHIN FIRST 6 MONTHS AFTER SUBSTANTIAL COMPLETION.
3. PROVIDE CUSTOMIZED ENGRAVED PERMANENT BUTTON LABELS ON EACH SWITCH, LABEL TO MATCH BUTTON LABEL ID OR AS DIRECTED BY OWNER.
4. PART NUMBERS SHOWN ARE BASED ON WATTSTOPPER AS THE BASIS OF DESIGN. ALL APPROVED MANUFACTURERS ARE SUBJECT TO MEETING ALL FUNCTIONS AND CAPABILITIES OF THE BASIS OF DESIGN SYSTEM AND PRODUCTS. FAILURE TO MEET THESE SHALL REQUIRE THE CONTRACTOR TO PROVIDE A SYSTEM THAT DOES AT NOT ADDITIONAL COST.

GENERAL NOTES

5. REFER TO PLANS FOR LOCATIONS AND QUANTITIES OF DEVICES.
6. INSTALL ONE OF EACH CONTROL TYPE WITH PROGRAMMING, ADJUST, AND OBTAIN OWNERS APPROVAL PRIOR TO PROGRAMMING THE REMAINING CONTROLS.
7. WIRING MAY VARY BETWEEN MANUFACTURERS. CONTRACTOR IS RESPONSIBLE FOR PROVIDING THE REQUIRED WIRING THAT WILL BOTH MEET THE MANUFACTURERS REQUIREMENTS AND MATCH WITH THE SHOWN SYSTEM.
8. PROVIDE COMPLETE SHOP DRAWING SUBMITTALS INCLUDING OCCUPANCY SENSOR LAYOUT AND COVERAGE PATTERNS. PROVIDE ADDITIONAL SENSORS AS REQUIRED FOR 100% COVERAGE OF SPACES WITH OCCUPANCY SENSOR CONTROL.

ID	DETAIL	LIGHTS ON CONTROL	LIGHTS OFF CONTROL	LIGHTING CONTROL TYPE	DAYLIGHT SENSOR SETTING (FC)	TIME DELAY TO OFF (MIN.)	BAS AUX RELAY SIGNAL	PLUG LOAD CONTROLLER	NETWORKED CONTROLS	BUTTON_1	BUTTON_2	BUTTON_3	BUTTON_4	BUTTON_5	BUTTON_6	BUTTON_7	BUTTON_8	BUTTON_9	NOTES
1S4	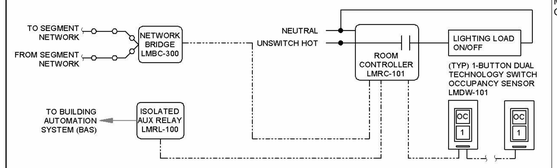	MANUAL & OCCUPANCY	MANUAL OR OCCUPANCY	ON/OFF	-	15	RELAY CLOSED ON OCCUPANCY	-	-	FUNTION: PRESS-ON PRESS-OFF LABEL ID:"ON/OFF"	-	-	-	-	-	-	-	-	
2D2	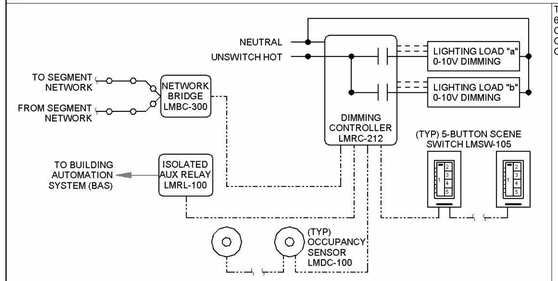	TIME ON AT 6AM MON-SAT, CAN MANUAL OVER-RIDE ON FOR 2HRS	TIME OFF AT 11PM DAILY, BLINK LIGHTS 10 MIN WARNING	DIMMING 0-10V	-	-	RELAY CLOSED ON OCCUPANCY	-	YES	FUNCTION: PRESS TOP-ON, HOLD TOP-RAISE PRESS BOTTOM-OFF, HOLD BOTTOM-LOWER LABEL ID: TOP-"ON/RAISE" BOTTOM-"OFF/LOWER"	FUNCTION: PRESS-PRESET SCENE #01 ZONE "a" 0% ZONE "b" 50% ZONE "c" 100% LABEL ID: "PRE #1"	FUNCTION: PRESS-PRESET SCENE #02 ZONE "a" 0% ZONE "b" 50% LABEL ID: "PRE #2"	FUNCTION: PRESS-SELECT ZONE "a" FOR DIMMING LABEL ID: "ZONE a"	FUNCTION: PRESS-SELECT ZONE "b" FOR DIMMING LABEL ID: "ZONE b"	-	-	-	-	
2DP4	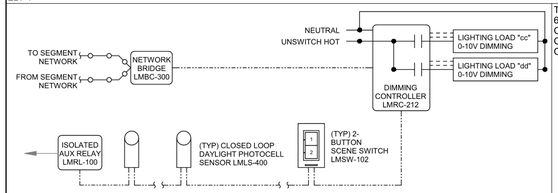	TIME ON AT 6AM MON-SAT, CAN MANUAL OVER-RIDE ON FOR 2HRS	TIME OFF AT 11PM DAILY, BLINK LIGHTS 10 MIN WARNING	DIMMING 0-10V	30	-	-	-	YES	REFER TO COMMON SPACE/ EXTERIOR LOW VOLTAGE SWITCH CONTROL SCHEDULES	-	-	-	-	-	-	-	-	
2DP5	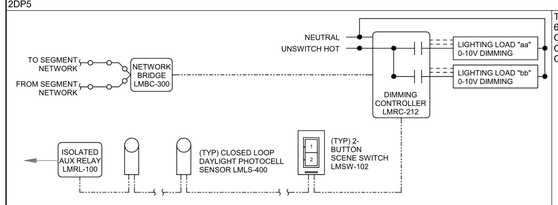	TIME ON AT 6AM MON-SAT, CAN MANUAL OVER-RIDE ON FOR 2HRS	TIME OFF AT 11PM DAILY, BLINK LIGHTS 10 MIN WARNING	DIMMING 0-10V	30	-	-	-	YES	FUNCTION: PRESS TOP-ON, HOLD TOP-RAISE LABEL ID: TOP-"ON/RAISE" BOTTOM-"OFF/LOWER"	-	-	-	-	-	-	-	-	
4DP4	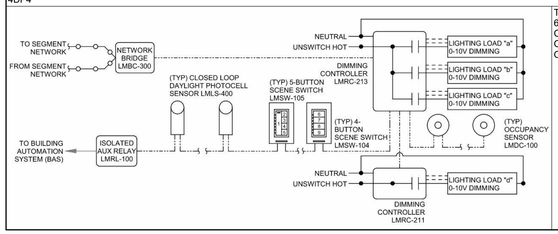	TIME ON AT 6AM MON-SAT, CAN MANUAL OVER-RIDE ON FOR 2HRS	TIME OFF AT 11PM DAILY, BLINK LIGHTS 10 MIN WARNING	DIMMING 0-10V	30	-	RELAY CLOSED ON OCCUPANCY	-	YES	FUNCTION: PRESS TOP-ON, HOLD TOP-RAISE PRESS BOTTOM-OFF, HOLD BOTTOM-LOWER LABEL ID: TOP-"ON/RAISE" BOTTOM-"OFF/LOWER"	FUNCTION: PRESS-SELECT ZONE "a" FOR DIMMING LABEL ID: "ZONE a"	FUNCTION: PRESS-SELECT ZONE "b" FOR DIMMING LABEL ID: "ZONE b"	FUNCTION: PRESS-SELECT ZONE "c" FOR DIMMING LABEL ID: "ZONE c"	FUNCTION: PRESS-SELECT ZONE "d" FOR DIMMING LABEL ID: "ZONE d"	FUNCTION: PRESS-PRESET SCENE #01 ZONE "a" 75% ZONE "b" 75% ZONE "c" 75% ZONE "d" 75% LABEL ID: "PRE #1"	FUNCTION: PRESS-PRESET SCENE #02 ZONE "a" 50% ZONE "b" 50% ZONE "c" 50% ZONE "d" 50% LABEL ID: "PRE #2"	FUNCTION: PRESS-PRESET SCENE #03 ZONE "a" 0% ZONE "b" 100% ZONE "c" 100% ZONE "d" 0% LABEL ID: "PRE #3"	FUNCTION: PRESS-PRESET SCENE #04 ZONE "a" 0% ZONE "b" 50% ZONE "c" 50% ZONE "d" 100% LABEL ID: "PRE #4"	-

10/3/2021 1:33:06 PM C:\Users\lbc\Desktop\Revit Local Files\2020\20191093 ELEC Central_IBC-Spectrum.rvt

ALL IDEAS, DESIGNS, ARRANGEMENTS AND PLANS INDICATED OR REPRESENTED BY THIS DRAWING ARE OWNED BY AND THE PROPERTY OF AJC ARCHITECTS PC AND WERE CREATED, EVOLVED, AND DEVELOPED FOR USE ON AND IN CONNECTION WITH THE SPECIFIED PROJECT. NONE OF THE IDEAS, DESIGNS, ARRANGEMENTS OR PLANS SHALL BE USED BY OR DISCLOSED TO ANY PERSON, FIRM OR CORPORATION FOR ANY PURPOSE WHATSOEVER WITHOUT WRITTEN CONSENT OF AJC ARCHITECTS PC. WRITTEN DIMENSIONS ON THESE DRAWINGS SHALL HAVE PRECEDENCE OVER SCALE DIMENSIONS. CONTRACTORS SHALL VERIFY AND BE RESPONSIBLE FOR ALL DIMENSIONS AND CONDITIONS ON THE JOB AND THIS OFFICE MUST BE NOTIFIED OF ANY VARIATION FROM THE DIMENSIONS AND CONDITIONS SHOWN BY THESE DRAWINGS. WARNING: REPRODUCTION HEREOF IS A CRIMINAL OFFENCE UNDER 18 U.S.C. SEC. 506. UNAUTHORIZED DISCLOSURE MAY CONSTITUTE TRADE SECRET MISAPPROPRIATION IN VIOLATION OF 17.24.3 (H.) ET. SEQ. AND OTHER LAWS.

ARCHITECT 1877

ajc architects

703 east 1700 south
salt lake city, utah 84105
ph: 801.466.8818
fx: 801.466.4411
www.ajcarchitects.com

LICENSED PROFESSIONAL ENGINEER
No. 5497590-2202
Christopher Mark Lisk
STATE OF UTAH

10.01.21

CONSULTANT

SPECTRUM ENGINEERS

324 S. State St., Suite 400
Salt Lake City, UT 84111
800-678-7077
801-328-5151
fax: 801-328-5155
www.spectrum-engineers.com

OWNER INFORMATION

PROJECT DESCRIPTION

DUMKE GYMNASTICS TRAINING CENTER:

1825 E. SOUTH CAMPUS DRIVE
SALT LAKE CITY, UT 84112

AHJ STAMP

SHEET NAME:

LIGHTING CONTROL SCHEDULES

REVISIONS

MARK	DATE	DESCRIPTION

ISSUE DATA

ISSUE DATE:	10.01.21
ISSUE TYPE:	CD
DRAWN BY:	IBC
CHECKED BY:	LSK
PROJECT#:	1877

SHEET NUMBER:

EL605

EQUIPMENT/CABLE LIST

THE ITEMS INDICATED BELOW SHALL NOT BE CONSTRUED AS A "BILL OF MATERIALS". THIS LIST IDENTIFIES ITEMS OF SIGNIFICANCE USED DURING THE DESIGN OF THE CABLING INSTALLATION. WHERE THE ITEMS INDICATED ARE ONE PORTION OF AN ASSEMBLY, THE ENTIRE ASSEMBLY SHALL BE PROVIDED UNLESS SPECIFIED OTHERWISE.
PROVIDE ALL MISCELLANEOUS HARDWARE AND SUPPORTS WHICH MAY NOT BE LISTED HERE, FOR A COMPLETE INSTALLATION. COMPARE CATALOG NUMBERS WITH DESCRIPTIONS AND NOTIFY ENGINEER OF DISCREPANCIES PRIOR TO BID. IF CATALOG NUMBERS DO NOT MATCH DESCRIPTIONS, THE DESCRIPTIONS TAKE PRECEDENCE.
PROVIDE COMPLETE SUBMITTAL FOR APPROVAL PRIOR TO PURCHASING ANY EQUIPMENT OR CABLE. REFER TO SPECIFICATIONS FOR ADDITIONAL REQUIREMENTS.

SYMBOL	ITEM DESCRIPTION	ACCEPTABLE TYPES
	STATION CABLE, DATA - CATEGORY 6, UTP, PLENUM, PINK, SECURITY	COMMSCOPE 4765614/10
	STATION CABLE, DATA - CATEGORY 6, UTP, PLENUM, WHITE, DATA	COMMSCOPE 4763314/10
	STATION CABLE, DATA - CATEGORY 6, UTP, PLENUM, VIOLET, SCADA	COMMSCOPE 4768314/10
	STATION CABLE, DATA - CATEGORY 6A, UTP, PLENUM, GRAY, WIRELESS	COMMSCOPE 760107078
	STATION CABLE, DATA - CATEGORY 6, UTP, OSP, BLACK, IRRIGATION CONTROL	COMMSCOPE 4665904/10
	25 PAIR CATEGORY 3, RISER RATED	COMMSCOPE 106824329
	100 PAIR CATEGORY 3, OSP RATED	GENERAL CABLE 7527161 OR APPROVED EQUAL
	100 PAIR FUSE PROTECTION, 110/110 TERMINATION, WITH COVER	CIRCA 1880ECA1-100 OR APPROVED EQUAL
	5 PIN PROTECTION MODULE, 240V SOLID STATE MODULE	CIRCA 4B1FS-240 OR APPROVED EQUAL
	4 PAIR PROTECTION, 110 SERIES TERMINATION	CIRCA 604 110 SERIES
	OUTDOOR/INDOOR TUBE CABLE, 7 TUBE	SUMITOMO TC07MTX
	AIR BLOWN SINGLE MODE FIBER, 48 STRAND	SUMITOMO FB48SX
	AIR BLOWN SINGLE MODE FIBER, 24 STRAND	SUMITOMO FB24SX
▽E	VOICE OUTLET, TWO GANG BOX MOUNTED, ANALOG DEVICE	VIKING ELECTRONICS OR APPROVED EQUAL
	CATEGORY 6 JACK - DATA, WHITE	COMMSCOPE, PANDUIT, LEVITON, BELDEN
▼2	DATA OUTLET, SINGLE GANG FACEPLATE, WHITE, 2 POSITION	COMMSCOPE 108333014
	CATEGORY 6 JACK - DATA , WHITE	COMMSCOPE 700206725
▼4	DATA OUTLET, SINGLE GANG FACEPLATE, WHITE, 4 POSITION	COMMSCOPE 108333162
	CATEGORY 6 JACK - DATA , WHITE	COMMSCOPE 700206725
C	DATA OUTLET, SURFACE MOUNT BOX, WHITE, 2 POSITION	COMMSCOPE 107984056
	CATEGORY 6 JACK - WIRELESS, GRAY	COMMSCOPE 760149997
▼2AV	DATA OUTLET, SINGLE GANG FACEPLATE, WHITE, 2 POSITION	COMMSCOPE 108333014
	CATEGORY 6 JACK - AV, WHITE	COMMSCOPE 700206725
2AV	DATA OUTLET, SURFACE MOUNT BOX, WHITE, 2 POSITION	COMMSCOPE 108168469
	CATEGORY 6 JACK - AV, WHITE	COMMSCOPE 700206725
▼OSP	DATA OUTLET, SURFACE MOUNT BOX, WHITE, 1 POSITION	COMMSCOPE 107984015
	CATEGORY 6 JACK - DATA, WHITE	COMMSCOPE 700206725
	WEATHERPROOF BOX, IP67 RATED, PROVIDED BY DIVISION 26 CONTRACTOR	
	DATA OUTLET, WHITE, 1 POSITION	COMMSCOPE 107984015
	CATEGORY 6 JACK - SECURITY, WHITE	COMMSCOPE 700206725
WPP	WIRELESS PATCH PANEL,CAT 6A, 48-PORT, BLACK, 2RU	COMMSCOPE 760152595
SPP1	STATION PATCH PANEL,CAT 6, 48-PORT, BLACK, 2RU	COMMSCOPE 760152579
RPP	RISER PATCH PANEL 24-PORT 110 TERMINATION STYLE, BLACK 1RU	COMMSCOPE 760080000
FPP1	FIBER PATCH PANEL, 4RU	CORNING CCH-04U
	SPLICE CASSETTE - WITH SC/APC PIGTAILS, SINGLE-MODE	CORNING CCH-CS12-D9-P00RE
	BLANK FILLER PANEL	CORNING CCH-BLNK
FPP2	FIBER PATCH PANEL, 2RU	CORNING CCH-04U
	SPLICE CASSETTE - WITH SC/APC PIGTAILS, SINGLE-MODE	CORNING CCH-CS12-D9-P00RE
	BLANK FILLER PANEL	CORNING CCH-BLNK
VWM	VERTICAL WIRE MANAGER, BLACK 10", FRONT AND REAR DOORS	CHATSWORTH 13904-703
HWM	HORIZONTAL WIRE MANAGER, BLACK, 2RU, FRONT ONLY	CHATSWORTH 13930-702
SHELF	RACK MOUNT SHELF, BLACK, 2RU	CHATSWORTH 10758-701
PS	EQUIPMENT RACK POWER STRIP, 10 POSITION, BLACK, 5-20P	APC AP9562
	EQUIPMENT RACK, 2 POST, BLACK	CHATSWORTH 55053-703
	CABLE RUNWAY, 12" BLACK WITH ALL REQUIRED MOUNTING ACCESSORIES	CHATSWORTH 10250-712
	BUTT SPLICE KIT, BLACK	CHATSWORTH 11301-001
	JUNCTION SPLICE KIT, BLACK	CHATSWORTH 11302-001
	ADJ JUNCTION SPLICE KIT, BLACK	CHATSWORTH 10616-001
	FOOT KIT, BLACK	CHATSWORTH 11309-701
	3" CHANNEL RACK TO RUNWAY, BLACK	CHATSWORTH 10595-712
	TRIANGLE BRACKETS 12", BLACK	CHATSWORTH 11312-712
	END CLOSING KIT, CABLE RUNWAY, BLACK	CHATSWORTH 11700-712
	RUNWAY WALL BRACKETS, BLACK	CHATSWORTH 10608-701
	SWIVEL SPLICE KIT, BLACK	CHATSWORTH 10488-701
	CABLE RUNWAY ELEVATION KIT, 6"	CHATSWORTH 10506-706
	PLYWOOD BACKBOARD, 4'X8', GRADE AC, FIRE-TREATED AND PAINTED	
	TELECOMMUNICATIONS MAIN GROUNDING BUS BAR	PANDUIT GB4B0624TPI-1
	TELECOMMUNICATIONS GROUNDING BUS BAR	PANDUIT GB2B0306TPI-1

NOTE: ALL RACKS, LADDER, PATCH PANELS AND ACCESSORIES SHALL BE BLACK IN COLOR.

GENERAL PROJECT NOTES

1. UNLESS OTHERWISE NOTED, INSTALL ALL CABLE INSIDE RACEWAY SYSTEMS. WHERE RACEWAY SYSTEMS HAVE NOT BEEN PROVIDED OR SPECIFIED, INSTALL CABLE THROUGH THE SPECIFIED "CADDY" CLIPS AT THE MINIMUM INTERVALS IDENTIFIED IN THE SPECIFICATIONS. SUPPORT "CADDY" CLIPS DIRECTLY FROM THE BUILDING STRUCTURE, NOT FROM OTHER BUILDING SYSTEM SUPPORT WIRES OR CABLE.
2. PROVIDE PLENUM RATED CABLE FOR ALL SPECIFIED CABLE.
3. LABEL ALL CABLE INSTALLED UNDER THIS CONTRACT REGARDLESS OF LENGTH. ACCORDING TO WRITTEN SPECIFICATION.
4. THE EQUIPMENT LABELING IDENTIFIED ON DETAILS IN THESE DRAWINGS ARE EXAMPLES ONLY OF THE ACTUAL LABELING WHICH IS REQUIRED AS PART OF THIS CONTRACT. PRIOR TO FABRICATION, SUBMIT THE NOMENCLATURE FOR ALL LABELS TO THE OWNER FOR REVIEW. THIS REQUIREMENT INCLUDES BUT IS NOT LIMITED TO ALL CABLE LABELING, AND ALL EQUIPMENT LABELING.
5. GROUND ALL EQUIPMENT RACKS LADDER RACK, AND EQUIPMENT INSTALLED UNDER THIS CONTRACT IN COMPLIANCE WITH THE CONTRACT DOCUMENTS AND WRITTEN SPECIFICATION.
6. PROVIDE THE QUANTITY OF PATCH PANELS REQUIRED +20% FOR THE TOTAL VOICE AND DATA OUTLETS SHOWN ON FLOOR PLANS FOR THE PARTICULAR LEVEL.
7. COORDINATE WITH OWNER I.T. PERSONNEL ON RACK PATCH PANEL DENSITY PRIOR TO ANY CABLE TERMINATION.
8. FACEPLATE COLOR WILL BE DETERMINED BY THE ARCHITECT AND OWNER. FACEPLATE COLOR SHOULD MATCH ELECTRICAL FACEPLATE COLOR, UNLESS OTHERWISE SPECIFIED.
9. FOR EVERY CABLE PULL SPECIFIED, COIL 15' OF EXCESS CABLE AT THE STATION END FOR FUTURE USE. NEATLY COIL 15' ABOVE THE CEILING OR BELOW FLOOR WHERE APPLICABLE.

ABBREVIATIONS

NOTE: ALL ABBREVIATIONS MAY NOT BE USED.

A - AUGMENTED
ER - EQUIPMENT ROOM
CAT - CATEGORY
E - ENHANCED
EA - EACH
FPP - FIBER PATCH PANEL
GIG - GIGA HERTZ
HWM - HORIZONTAL WIRE MANAGEMENT
TC - TELECOMMUNICATIONS ROOM
NIC - NOT IN CONTRACT
OE - OWNER ELECTRONICS
OFCI - OWNER FURNISHED CONTRACTOR INSTALLED
PNM - PLENUM
PR - PAIR
PS - POWER SUPPLY
RPP - RISER PATCH PANEL
SPP - TYPE S PATCH PANEL
TYP - TYPICAL
VWM - VERTICLE WIRE MANAGEMENT

DEFINITIONS

NOTE: ALL DEFINITIONS MAY NOT BE USED.

INDICATED: THE TERM "INDICATED" REFERS TO GRAPHIC REPRESENTATIONS, NOTES, OR SCHEDULES ON THE DRAWINGS, OTHER PARAGRAPHS OR SCHEDULES IN THE SPECIFICATIONS, AND SIMILAR REQUIREMENTS IN THE CONTRACT DOCUMENTS. WHERE TERMS SUCH AS "SHOWN", "NOTED", "SCHEDULED", AND "SPECIFIED" ARE USED, IT IS TO HELP THE READER LOCATE THE REFERENCE, NO LIMITATION ON LOCATION IS INTENDED.

DIRECTED: TERMS SUCH AS "DIRECTED", "REQUESTED", AUTHORIZED", "SELECTED", "APPROVED", "REQUIRED", AND "PERMITTED" MEAN "DIRECTED BY THE ENGINEER", "REQUESTED BY THE ENGINEER", AND SIMILAR PHRASES.

APPROVE: THE TERM "APPROVED", WHERE USED IN CONJUNCTION WITH THE ENGINEER'S ACTION ON THE CONTRACTOR'S SUBMITTALS, APPLICATIONS, AND REQUESTS, IS LIMITED TO THE ENGINEER'S DUTIES AND RESPONSIBILITIES AS STATED IN GENERAL AND SUPPLEMENTARY CONDITIONS.

FURNISH: THE TERM "FURNISH" IS USED TO MEAN "SUPPLY AND DELIVER TO THE PROJECT SITE, READY FOR UNLOADING, UNPACKING, ASSEMBLY, INSTALLATION, AND SIMILAR OPERATIONS."

INSTALL: THE TERM "INSTALL" IS USED TO DESCRIBE OPERATIONS AT PROJECT SITE INCLUDING THE ACTUAL "UNLOADING, UNPACKING, ASSEMBLY, ERECTION, PLACING, ANCHORING, APPLYING, WORKING TO DIMENSION, FINISHING, CURING, PROTECTING, CLEANING, AND SIMILAR OPERATIONS."

PROVIDE: THE TERM "PROVIDE" MEANS "TO FURNISH AND INSTALL, COMPLETE AND READY FOR THE INTENDED USE."

INSTALLER: AN "INSTALLER" IS THE CONTRACTOR OR AN ENTITY ENGAGED BY THE CONTRACTOR, EITHER AS AN EMPLOYEE, SUBCONTRACTOR, OR SUB-SUBCONTRACTOR, FOR PERFORMANCE OF A PARTICULAR CONSTRUCTION ACTIVITY, INCLUDING INSTALLATION, ERECTION, APPLICATION, AND SIMILAR OPERATIONS. INSTALLERS ARE REQUIRED TO BE EXPERIENCED IN THE OPERATIONS THEY ARE ENGAGED TO PERFORM.

ELECTRONIC SYSTEMS: THE TERM "ELECTRONIC SYSTEMS" IS USED TO DESCRIBE ALL LOW VOLTAGE SYSTEMS GENERALLY REFERRED TO AS "SPECIAL SYSTEMS". THESE SYSTEMS INCLUDE BUT ARE NOT NECESSARILY LIMITED TO ALL SYSTEMS WHICH UTILIZE VOLTAGES OF LESS THAN 71 VOLTS SUCH AS SOUND SYSTEMS, VIDEO SYSTEMS, TV SYSTEMS, SECURITY SYSTEMS, VOICE AND DATA CABLING SYSTEMS, ETC...

ARCHITECT 1877

ajc architects

703 east 1700 south
salt lake city, utah 84105
ph: 801.466.8818
fx: 801.466.4411
www.ajcarchitects.com

LICENSED PROFESSIONAL ENGINEER
No. 5497590-2202
Christopher Kelly Kobayashi
STATE OF UTAH
10.01.21

CONSULTANT

SPECTRUM ENGINEERS
324 S. State St., Suite 400
Salt Lake City, UT 84111
800-678-7077
801-328-5151
fax: 801-328-5155
www.spectrum-engineers.com

OWNER INFORMATION

PROJECT DESCRIPTION

DUMKE GYMNASTICS TRAINING CENTER:

1825 E. SOUTH CAMPUS DRIVE
SALT LAKE CITY, UT 84112

AHJ STAMP

SHEET NAME:

TELECOM SCHEDULES AND NOTES

REVISIONS

MARK DATE DESCRIPTION

ISSUE DATA

ISSUE DATE: 10.01.21
ISSUE TYPE: CD
DRAWN BY: IBC
CHECKED BY: LSK
PROJECT#: 1877

SHEET NUMBER:

ET001

10/3/2021 1:33:04 PM C:\Users\ibc\Desktop\Revit Local Files\2020\20191093 ELEC Central_IBC-Spectrum.rvt

ALL IDEAS, DESIGNS, ARRANGEMENTS AND PLANS INDICATED OR REPRESENTED BY THIS DRAWING ARE OWNED BY AND THE PROPERTY OF AJC ARCHITECTS PC AND WERE CREATED, EVOLVED, AND DEVELOPED FOR USE ON AND IN CONNECTION WITH THE SPECIFIED PROJECT. NONE OF THE IDEAS, DESIGNS, ARRANGEMENTS OR PLANS SHALL BE USED BY OR DISCLOSED TO ANY PERSON, FIRM, OR CORPORATION FOR ANY PURPOSE WHATSOEVER WITHOUT WRITTEN CONSENT OF AJC ARCHITECTS PC. WRITTEN DIMENSIONS ON THESE DRAWINGS SHALL HAVE PRECEDENCE OVER SCALE DIMENSIONS. CONTRACTORS SHALL VERIFY AND BE RESPONSIBLE FOR ALL DIMENSIONS AND CONDITIONS ON THE JOB AND THIS OFFICE MUST BE NOTIFIED OF ANY VARIATION FROM THE DIMENSIONS AND CONDITIONS SHOWN BY THESE DRAWINGS. WARNING: REPRODUCTION HEREOF IS A CRIMINAL OFFENSE UNDER 18 U.S.C. SEC. 506. UNAUTHORIZED DISCLOSURE MAY CONSTITUTE TRADE SECRET MISAPPROPRIATION IN VIOLATION OF I.C.24-2-31-1 ET. SEQ. AND OTHER LAWS.

ALL IDEAS, DESIGNS, ARRANGEMENTS AND PLANS INDICATED OR REPRESENTED BY THIS DRAWING ARE OWNED BY AND THE PROPERTY OF AJC ARCHITECTS PC AND WERE CREATED, EVOLVED, AND DEVELOPED FOR USE ON AND IN CONNECTION WITH THE SPECIFIED PROJECT. NONE OF THE IDEAS, DESIGNS, ARRANGEMENTS OR PLANS SHALL BE USED BY OR DISCLOSED TO ANY PERSON, FIRM, OR CORPORATION FOR ANY PURPOSE WHATSOEVER WITHOUT WRITTEN CONSENT OF AJC ARCHITECTS PC. WRITTEN DIMENSIONS ON THESE DRAWINGS SHALL HAVE PRECEDENCE OVER SCALE DIMENSIONS. CONTRACTORS SHALL VERIFY AND BE RESPONSIBLE FOR ALL DIMENSIONS AND CONDITIONS ON THE JOB, AND THIS OFFICE MUST BE NOTIFIED OF ANY VARIATION FROM THE DIMENSIONS AND CONDITIONS SHOWN BY THESE DRAWINGS. WARNING: REPRODUCTION HEREOF IS A CRIMINAL OFFENSE UNDER 18 U.S.C. SEC. 506. UNAUTHORIZED DISCLOSURE MAY CONSTITUTE TRADE SECRET MISAPPROPRIATION IN VIOLATION OF IC 24-2-3-1 ET. SEQ. AND OTHER LAWS.

10/3/2021 1:33:02 PM C:\Users\lbc\Desktop\Revit Local Files\2020\20191093 ELEC Central_IBC-Spectrum.rvt

GENERAL SHEET NOTES

1 UNLESS NOTED OTHERWISE, ELECTRICAL ITEMS SHOWN IN DARK AND SOLID LINES ARE NEW AND THE CONTRACTOR SHALL PROVIDE THEM. ITEMS SHOWN IN SOLID LIGHT LINES ARE TO REMAIN.

2 INDICATED LOCATION OF MECHANICAL EQUIPMENT IS APPROXIMATE AND PROVIDED BY OTHERS. COORDINATE EXACT LOCATIONS OF ALL MECHANICAL EQUIPMENT WITH MECHANICAL CONTRACTOR PRIOR TO ROUGH-IN.

3 CONTRACTOR SHALL UPDATE ALL NEW AND EXISTING PANEL SCHEDULES WITH NEW CIRCUIT DATA. SCHEDULE SHALL BE ON A CARD STOCK TYPE OF MATERIAL AND TYPED WITH THE UPDATED INFORMATION.

4 TYPICAL FOR ALL OPEN TO STRUCTURE CEILING AREAS - POWER CABLING AND CONTROLS CABLING SHALL BE INSTALLED IN CONDUIT IN A NEAT AND PROFESSIONAL MANNER, PARALLEL AND PERPENDICULAR TO STRUCTURE WITH CONDUIT UP IN STUCTURE AND PAINTED TO MATCH SURFACE. ALL LOW VOLTAGE CABLING SHALL BE INSTALLED IN TRAY OR CONDUIT. INSTALLATION SHALL COMPLY WITH NECA STANDARDS.

5 PROVIDE BLANK FACEPLATES AT ALL LOCATIONS WHERE DEVICES WERE DEMOLISHED BUT RACEWAY WAS LEFT TO REMAIN AND NO NEW DEVICES ARE BEING INSTALLED AT THAT LOCATION.

6 REFER TO EE701 FOR TYPICAL MOUNTING AND ALIGNMENT OF ELECTRICAL DEVICES.

7 LOCATE ALL EQUIPMENT DISCONNECTS IN ACCESSIBLE LOCATION ADJACENT TO EQUIPMENT AND POSITIONED TO COMPLY WITH NEC WORK SPACE CLEARANCES.

8 COORDINATE EXACT LOCATIONS OF FLOORBOXES AND POKE THROUGH DEVICES WITH ARCHITECT AND BUILDING STRUCTURAL ELEMENTS PRIOR TO INSTALLATION AND ROUGH-IN.

9 ALL EXPOSED RACEWAYS LOCATED IN LABS SHALL BE ROUTED HORIZONTALLY 8FT OR HIGHER UNLESS NOTED OTHERWISE.

10 ALL PATHWAYS FOR LOW VOLTAGE CABLING NOT REQUIRED TO BE IN CONDUITS SHALL BE ROUTED IN J-HOOK PATHWAYS. CONCEAL ALL PATHWAYS ABOVE ACCESSIBLE CEILING SPACES. DO NOT RUN CABLES IN EXPOSED AREAS. WHERE CONCEALMENT IS NOT POSSIBLE IN EXPOSED AREAS, CONTRACTOR SHALL PROVIDE CONDUIT TO ROUTE CABLING WHERE VISIBLE. ALL CONDUIT SHALL BE PAINED TO MATCH CEILING AND PROVIDED WITH PROTECTIVE BUSHINGS.

11 REFER TO EY SHEETS TO ADDITIONAL SECURITY CAMERA DROP LOCATIONS.

SHEET KEYNOTES

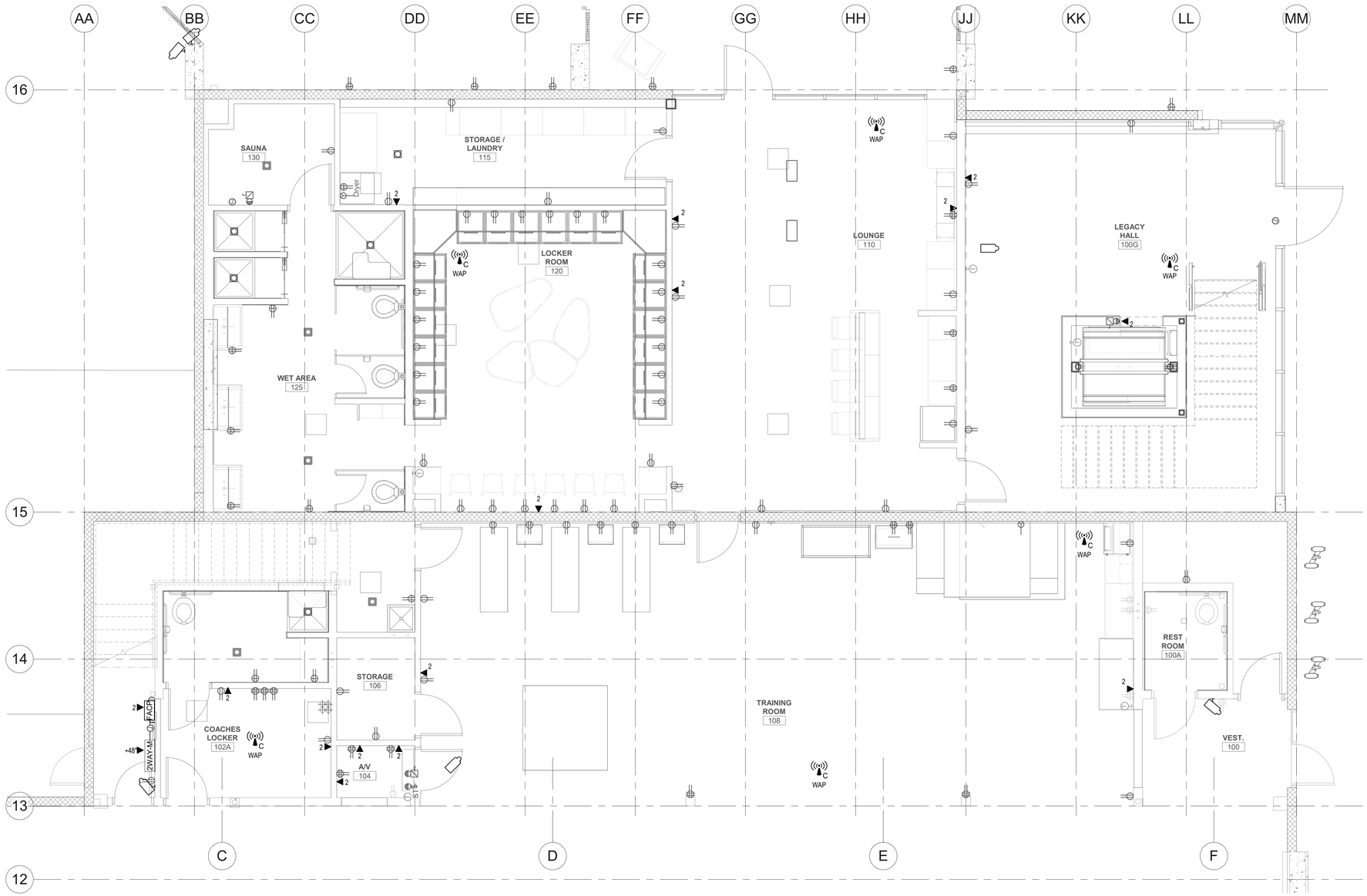

A1 LEVEL 1 TELECOMMUNICATIONS FLOOR PLAN
SCALE: 1/4" = 1'-0"

0 2' 4' 8'

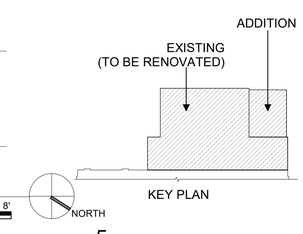

ARCHITECT 1877
ajc architects
703 east 1700 south
salt lake city, utah 84105
ph: 801.466.8818
fx: 801.466.4411
www.ajcarchitects.com
LICENSED PROFESSIONAL ENGINEER
No. 5497590-2202
Christopher Mark Kirkham
STATE OF UTAH
10.01.21

CONSULTANT
SPECTRUM ENGINEERS
324 S. State St., Suite 400
Salt Lake City, UT 84111
800-678-7077
801-328-5151
fax: 801-328-5155
www.spectrum-engineers.com

OWNER INFORMATION

PROJECT DESCRIPTION

DUMKE GYMNASTICS TRAINING CENTER:

1825 E. SOUTH CAMPUS DRIVE
SALT LAKE CITY, UT 84112

AHJ STAMP

SHEET NAME:
LEVEL 1 TELECOM FLOOR PLAN

REVISIONS

MARK	DATE	DESCRIPTION

ISSUE DATA

ISSUE DATE:	10.01.21
ISSUE TYPE:	CD
DRAWN BY:	IBC
CHECKED BY:	LSK
PROJECT#:	1877

SHEET NUMBER:

ET101

ALL IDEAS, DESIGNS, ARRANGEMENTS AND PLANS INDICATED OR REPRESENTED BY THIS DRAWING ARE OWNED BY AND THE PROPERTY OF AJC ARCHITECTS PC AND WERE CREATED, EVOLVED, AND DEVELOPED FOR USE ON AND IN CONNECTION WITH THE SPECIFIED PROJECT. NONE OF THE IDEAS, DESIGNS, ARRANGEMENTS OR PLANS SHALL BE USED BY OR DISCLOSED TO ANY PERSON, FIRM, OR CORPORATION FOR ANY PURPOSE WHATSOEVER WITHOUT WRITTEN CONSENT OF AJC ARCHITECTS PC. WRITTEN DIMENSIONS ON THESE DRAWINGS SHALL HAVE PRECEDENCE OVER SCALE DIMENSIONS. CONTRACTORS SHALL VERIFY AND BE RESPONSIBLE FOR ALL DIMENSIONS AND CONDITIONS ON THE JOB AND THIS OFFICE MUST BE NOTIFIED OF ANY VARIATION FROM THE DIMENSIONS AND CONDITIONS SHOWN BY THESE DRAWINGS. WARNING: REPRODUCTION HEREOF IS A CRIMINAL OFFENSE UNDER 18 U.S.C. SEC. 506. UNAUTHORIZED DISCLOSURE MAY CONSTITUTE TRADE SECRET MISAPPROPRIATION IN VIOLATION OF 12-24-3 (1) ET. SEQ. AND OTHER LAWS.

10/3/2021 1:32:59 PM C:\Users\lbc\Desktop\Revit Local Files\2020\20191093 ELEC Central_IBC-Spectrum.rvt

GENERAL SHEET NOTES

1 UNLESS NOTED OTHERWISE, ELECTRICAL ITEMS SHOWN IN DARK AND SOLID LINES ARE NEW AND THE CONTRACTOR SHALL PROVIDE THEM. ITEMS SHOWN IN SOLID LIGHT LINES ARE TO REMAIN.

2 INDICATED LOCATION OF MECHANICAL EQUIPMENT IS APPROXIMATE AND PROVIDED BY OTHERS. COORDINATE EXACT LOCATIONS OF ALL MECHANICAL EQUIPMENT WITH MECHANICAL CONTRACTOR PRIOR TO ROUGH-IN.

3 CONTRACTOR SHALL UPDATE ALL NEW AND EXISTING PANEL SCHEDULES WITH NEW CIRCUIT DATA. SCHEDULE SHALL BE ON A CARD STOCK TYPE OF MATERIAL AND TYPED WITH THE UPDATED INFORMATION.

4 TYPICAL FOR ALL OPEN TO STRUCTURE CEILING AREAS - POWER CABLING AND CONTROLS CABLING SHALL BE INSTALLED IN CONDUIT IN A NEAT AND PROFESSIONAL MANNER, PARALLEL AND PERPENDICULAR TO STRUCTURE WITH CONDUIT UP IN STUCTURE AND PAINTED TO MATCH SURFACE. ALL LOW VOLTAGE CABLING SHALL BE INSTALLED IN TRAY OR CONDUIT. INSTALLATION SHALL COMPLY WITH NECA STANDARDS.

5 PROVIDE BLANK FACEPLATES AT ALL LOCATIONS WHERE DEVICES WERE DEMOLISHED BUT RACEWAY WAS LEFT TO REMAIN AND NO NEW DEVICES ARE BEING INSTALLED AT THAT LOCATION.

6 REFER TO EE701 FOR TYPICAL MOUNTING AND ALIGNMENT OF ELECTRICAL DEVICES.

7 LOCATE ALL EQUIPMENT DISCONNECTS IN ACCESSIBLE LOCATION ADJACENT TO EQUIPMENT AND POSITIONED TO COMPLY WITH NEC WORK SPACE CLEARANCES.

8 COORDINATE EXACT LOCATIONS OF FLOORBOXES AND POKE THROUGH DEVICES WITH ARCHITECT AND BUILDING STRUCTURAL ELEMENTS PRIOR TO INSTALLATION AND ROUGH-IN.

9 ALL EXPOSED RACEWAYS LOCATED IN LABS SHALL BE ROUTED HORIZONTALLY 8FT OR HIGHER UNLESS NOTED OTHERWISE.

10 ALL PATHWAYS FOR LOW VOLTAGE CABLING NOT REQUIRED TO BE IN CONDUITS SHALL BE ROUTED IN J-HOOK PATHWAYS. CONCEAL ALL PATHWAYS ABOVE ACCESSIBLE CEILING SPACES. DO NOT RUN CABLES IN EXPOSED AREAS. WHERE CONCEALMENT IS NOT POSSIBLE IN EXPOSED AREAS, CONTRACTOR SHALL PROVIDE CONDUIT TO ROUTE CABLING WHERE VISIBLE. ALL CONDUIT SHALL BE PAINED TO MATCH CEILING AND PROVIDED WITH PROTECTIVE BUSHINGS.

11 REFER TO EY SHEETS TO ADDITIONAL SECURITY CAMERA DROP LOCATIONS.

SHEET KEYNOTES

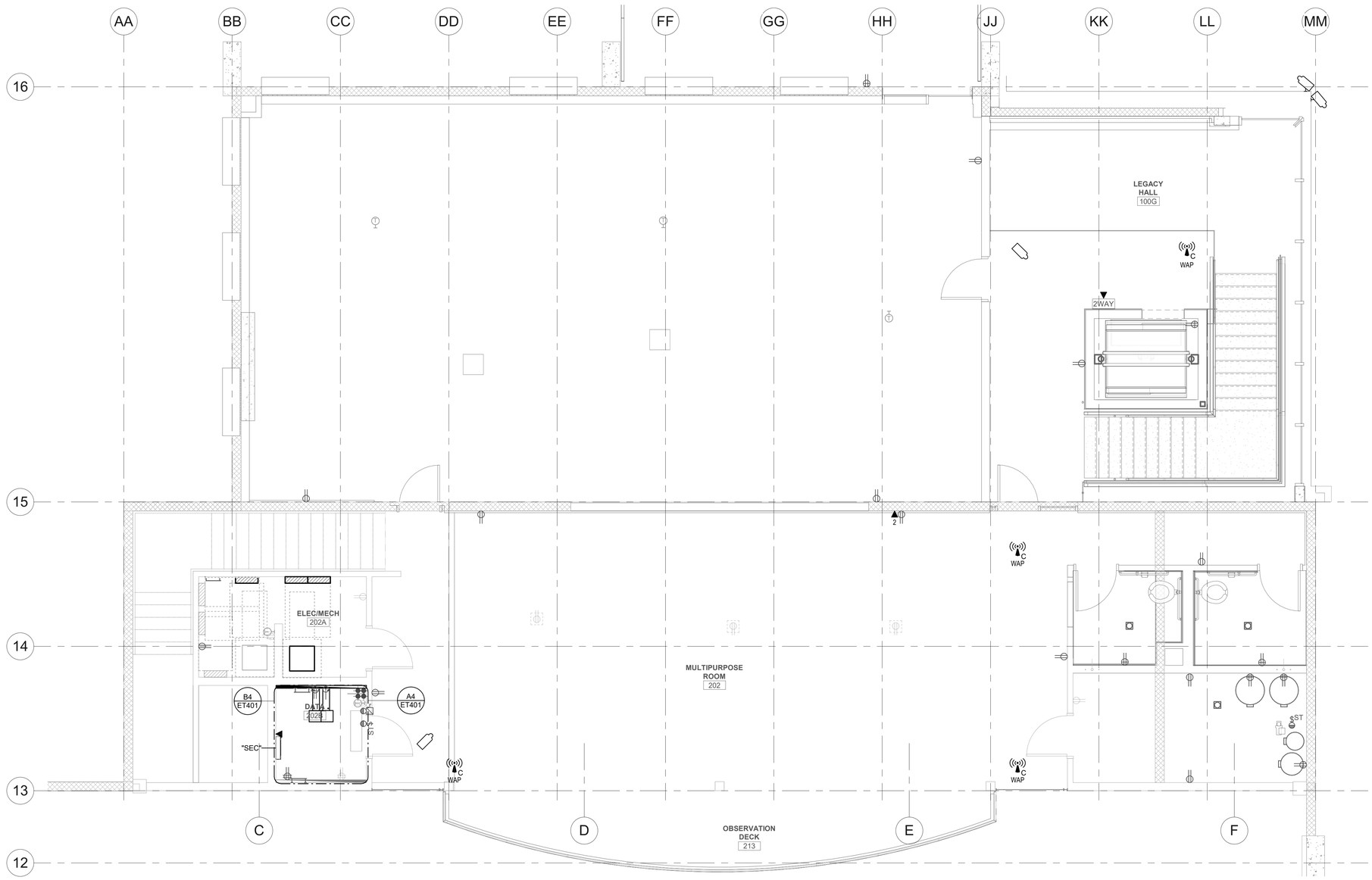

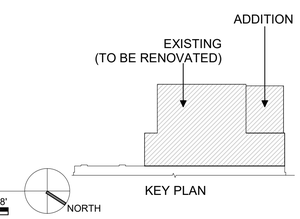

A1 LEVEL 2 TELECOMMUNICATIONS FLOOR PLAN
SCALE: 1/4" = 1'-0"

0 2' 4' 8'

ARCHITECT 1877
ajc architects
703 east 1700 south
salt lake city, utah 84105
ph: 801.466.8818
fx: 801.466.4411
www.ajcarchitects.com
LICENSED PROFESSIONAL ENGINEER No. 5497590-2202 Christopher Mark Kirk STATE OF UTAH
10.01.21

CONSULTANT
SPECTRUM ENGINEERS
324 S. State St., Suite 400
Salt Lake City, UT 84111
800-678-7077
801-328-5151
fax: 801-328-5155
www.spectrum-engineers.com

OWNER INFORMATION

PROJECT DESCRIPTION

DUMKE GYMNASTICS TRAINING CENTER:

1825 E. SOUTH CAMPUS DRIVE
SALT LAKE CITY, UT 84112

AHJ STAMP

SHEET NAME:
LEVEL 2 TELECOM FLOOR PLAN

REVISIONS

MARK	DATE	DESCRIPTION

ISSUE DATA

ISSUE DATE:	10.01.21
ISSUE TYPE:	CD
DRAWN BY:	IBC
CHECKED BY:	LSK
PROJECT#:	1877

SHEET NUMBER:
ET102

ALL IDEAS, DESIGNS, ARRANGEMENTS AND PLANS INDICATED OR REPRESENTED BY THIS DRAWING ARE OWNED BY AND THE PROPERTY OF AJC ARCHITECTS PC AND WERE CREATED, EVOLVED, AND DEVELOPED FOR USE ON AND IN CONNECTION WITH THE SPECIFIED PROJECT. NONE OF THE IDEAS, DESIGNS, ARRANGEMENTS OR PLANS SHALL BE USED BY OR DISCLOSED TO ANY PERSON, FIRM, OR CORPORATION FOR ANY PURPOSE WHATSOEVER WITHOUT WRITTEN CONSENT OF AJC ARCHITECTS PC. WRITTEN DIMENSIONS ON THESE DRAWINGS SHALL HAVE PRECEDENCE OVER SCALE DIMENSIONS. CONTRACTORS SHALL VERIFY AND BE RESPONSIBLE FOR ALL DIMENSIONS AND CONDITIONS ON THE JOB, AND THIS OFFICE MUST BE NOTIFIED OF ANY VARIATION FROM THE DIMENSIONS AND CONDITIONS SHOWN BY THESE DRAWINGS. WARNING: REPRODUCTION HEREOF IS A CRIMINAL OFFENSE UNDER 18 U.S.C. SEC. 506. UNAUTHORIZED DISCLOSURE MAY CONSTITUTE TRADE SECRET MISAPPROPRIATION IN VIOLATION OF 17 C.F.R. 240.21F-17. SEC 9 AND OTHER LAWS.

10/3/2021 1:32:55 PM C:\Users\lbc\Desktop\Revit Local Files\2020\20191093 ELEC Central_IBC-Spectrum.rvt

GENERAL SHEET NOTES

1 UNLESS NOTED OTHERWISE, ELECTRICAL ITEMS SHOWN IN DARK AND SOLID LINES ARE NEW AND THE CONTRACTOR SHALL PROVIDE THEM. ITEMS SHOWN IN SOLID LIGHT LINES ARE TO REMAIN.

2 INDICATED LOCATION OF MECHANICAL EQUIPMENT IS APPROXIMATE AND PROVIDED BY OTHERS. COORDINATE EXACT LOCATIONS OF ALL MECHANICAL EQUIPMENT WITH MECHANICAL CONTRACTOR PRIOR TO ROUGH-IN.

3 CONTRACTOR SHALL UPDATE ALL NEW AND EXISTING PANEL SCHEDULES WITH NEW CIRCUIT DATA. SCHEDULE SHALL BE ON A CARD STOCK TYPE OF MATERIAL AND TYPED WITH THE UPDATED INFORMATION.

4 TYPICAL FOR ALL OPEN TO STRUCTURE CEILING AREAS - POWER CABLING AND CONTROLS CABLING SHALL BE INSTALLED IN CONDUIT IN A NEAT AND PROFESSIONAL MANNER, PARALLEL AND PERPENDICULAR TO STRUCTURE WITH CONDUIT UP IN STUCTURE AND PAINTED TO MATCH SURFACE. ALL LOW VOLTAGE CABLING SHALL BE INSTALLED IN TRAY OR CONDUIT. INSTALLATION SHALL COMPLY WITH NECA STANDARDS.

5 PROVIDE BLANK FACEPLATES AT ALL LOCATIONS WHERE DEVICES WERE DEMOLISHED BUT RACEWAY WAS LEFT TO REMAIN AND NO NEW DEVICES ARE BEING INSTALLED AT THAT LOCATION.

6 REFER TO EE701 FOR TYPICAL MOUNTING AND ALIGNMENT OF ELECTRICAL DEVICES.

7 LOCATE ALL EQUIPMENT DISCONNECTS IN ACCESSIBLE LOCATION ADJACENT TO EQUIPMENT AND POSITIONED TO COMPLY WITH NEC WORK SPACE CLEARANCES.

8 COORDINATE EXACT LOCATIONS OF FLOORBOXES AND POKE THROUGH DEVICES WITH ARCHITECT AND BUILDING STRUCTURAL ELEMENTS PRIOR TO INSTALLATION AND ROUGH-IN.

9 ALL EXPOSED RACEWAYS LOCATED IN LABS SHALL BE ROUTED HORIZONTALLY 8FT OR HIGHER UNLESS NOTED OTHERWISE.

10 ALL PATHWAYS FOR LOW VOLTAGE CABLING NOT REQUIRED TO BE IN CONDUITS SHALL BE ROUTED IN J-HOOK PATHWAYS. CONCEAL ALL PATHWAYS ABOVE ACCESSIBLE CEILING SPACES. DO NOT RUN CABLES IN EXPOSED AREAS. WHERE CONCEALMENT IS NOT POSSIBLE IN EXPOSED AREAS, CONTRACTOR SHALL PROVIDE CONDUIT TO ROUTE CABLING WHERE VISIBLE. ALL CONDUIT SHALL BE PAINED TO MATCH CEILING AND PROVIDED WITH PROTECTIVE BUSHINGS.

11 REFER TO EY SHEETS TO ADDITIONAL SECURITY CAMERA DROP LOCATIONS.

SHEET KEYNOTES

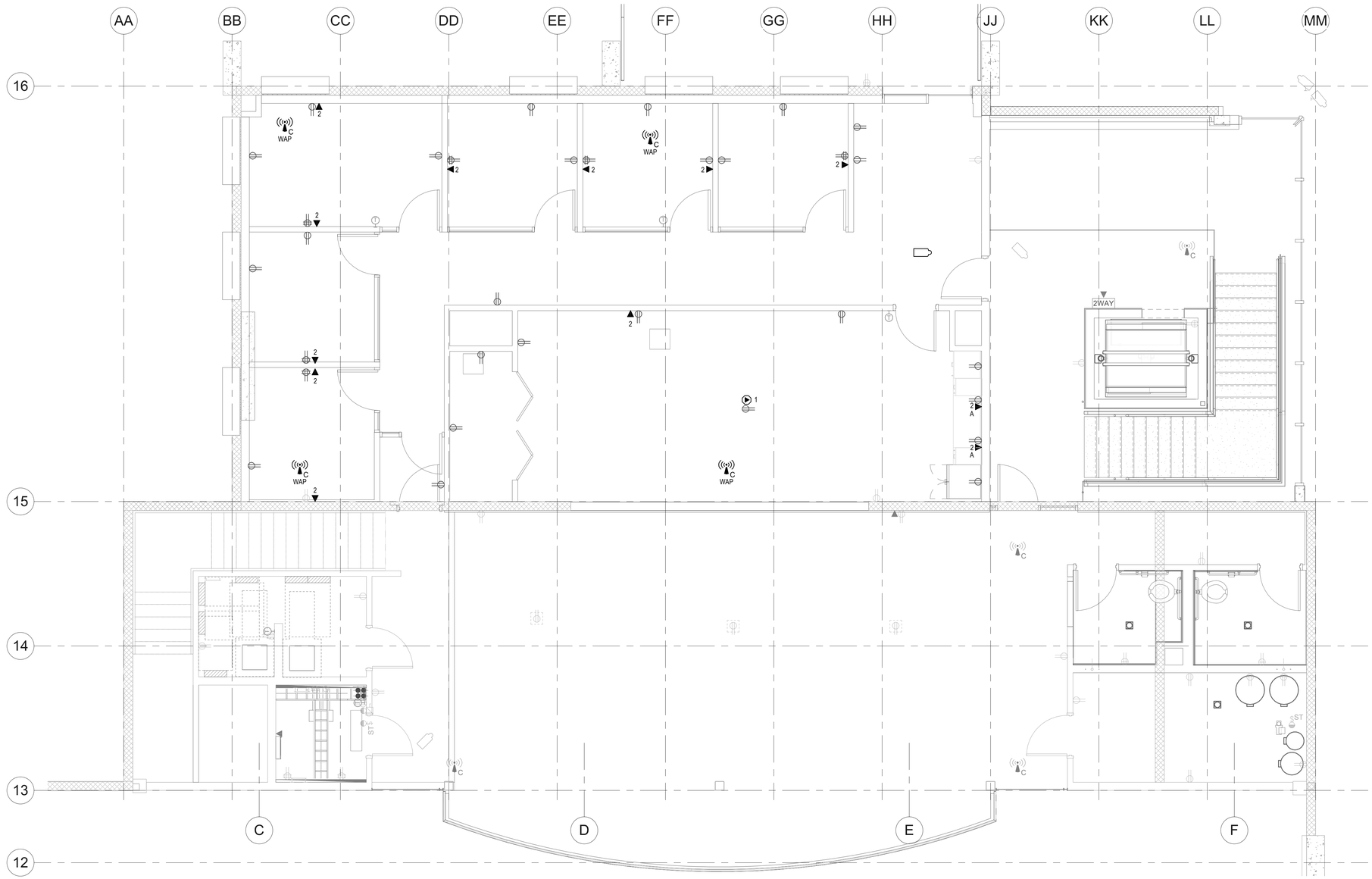

A1 LEVEL 2 TELECOMMUNICATIONS FLOOR PLAN ADD ALTERNATE #1
SCALE: 1/4" = 1'-0"

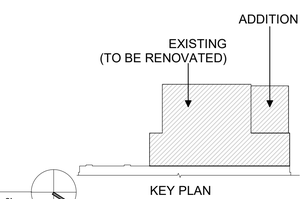

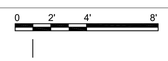

ARCHITECT 1877
ajc architects
703 east 1700 south
salt lake city, utah 84105
ph: 801.466.8818
fx: 801.466.4411
www.ajcarchitects.com

LICENSED PROFESSIONAL ENGINEER
No. 5497590-2202
Christopher Mark Kirkham
STATE OF UTAH

10.01.21

CONSULTANT

SPECTRUM ENGINEERS
324 S. State St., Suite 400
Salt Lake City, UT 84111
800-678-7077
801-328-5151
fax: 801-328-5155
www.spectrum-engineers.com

OWNER INFORMATION

PROJECT DESCRIPTION

DUMKE GYMNASTICS TRAINING CENTER:

1825 E. SOUTH CAMPUS DRIVE
SALT LAKE CITY, UT 84112

AHJ STAMP

SHEET NAME:
LEVEL 2 TELECOM FLOOR PLAN ADD ALTERNATE #1

REVISIONS

MARK	DATE	DESCRIPTION

ISSUE DATA

ISSUE DATE:	10.01.21
ISSUE TYPE:	CD
DRAWN BY:	IBC
CHECKED BY:	LSK
PROJECT#:	1877

SHEET NUMBER:
ET102.1

ALL IDEAS, DESIGNS, ARRANGEMENTS AND PLANS INDICATED OR REPRESENTED BY THIS DRAWING ARE OWNED BY AND THE PROPERTY OF AJC ARCHITECTS PC AND WERE CREATED, EVOLVED, AND DEVELOPED FOR USE ON AND IN CONNECTION WITH THE SPECIFIED PROJECT. NONE OF THE IDEAS, DESIGNS, ARRANGEMENTS OR PLANS SHALL BE USED BY OR DISCLOSED TO ANY PERSON, FIRM, OR CORPORATION FOR ANY PURPOSE WHATSOEVER WITHOUT WRITTEN CONSENT OF AJC ARCHITECTS PC. WRITTEN DIMENSIONS ON THESE DRAWINGS SHALL HAVE PRECEDENCE OVER SCALE DIMENSIONS. CONTRACTORS SHALL VERIFY AND BE RESPONSIBLE FOR ALL DIMENSIONS AND CONDITIONS ON THE JOB AND THIS OFFICE MUST BE NOTIFIED OF ANY VARIATION FROM THE DIMENSIONS AND CONDITIONS SHOWN BY THESE DRAWINGS. WARNING: REPRODUCTION HEREOF IS A CRIMINAL OFFENSE UNDER 18 U.S.C. SEC. 506. UNAUTHORIZED DISCLOSURE MAY CONSTITUTE TRADE SECRET MISAPPROPRIATION IN VIOLATION OF 12-24-3 H.1 ET. SEQ. AND OTHER LAWS.

10/3/2021 1:32:52 PM C:\Users\ibc\Desktop\Revit Local Files\2020\20191093 ELEC Central_IBC-Spectrum.rvt

DATA DEVICE DROP SCHEDULE - DATA CLOSET 214	
DATA DEVICE TYPE	# OF DROPS
CEILING WIRELESS ACCESS POINT (2-DROP)	20
SECURITY CAMERA (1-DROP)	16
Wall Data - 2 Drop	36
Grand total	72

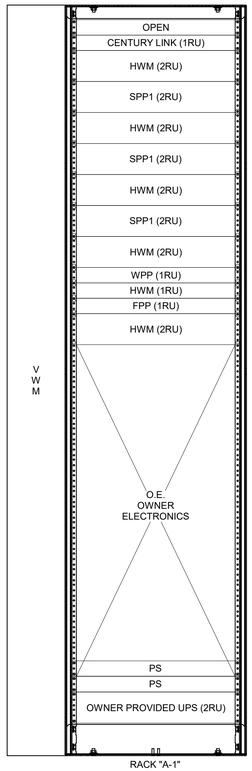

A1 DATA 214 EQUIPMENT RACK ELEVATION
SCALE: NTS

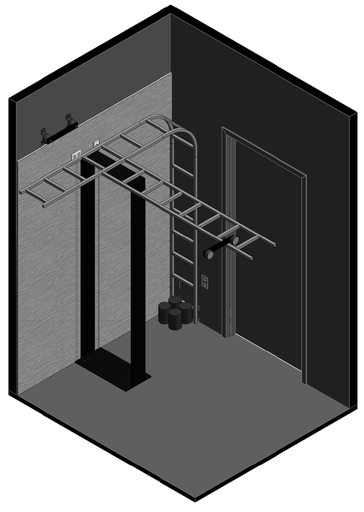

A3 DATA 214 ISO
SCALE:

SHEET KEYNOTES

1 RELOCATE EXISTING UPS TO NEW TELECOM RACK. EXTEND CABLING AS REQUIRED.

2 PROTECT AND MAINTAIN EXISTING SCADA EQUIPMENT AND CABLING.

3 RELOCATE ALL EXISTING TELECOM EQUIPMENT IN SPACE TO NEW TELECOM RACK UNLESS OTHERWISE NOTED. EXTEND CABLING AS REQUIRED.

4 12"X1" LADDER RACK MOUNTED AT +7'-0" AFF.

5 SUSPEND TRAY ON THIS END. PROVIDE ALL REQUIRED HARDWARE TO SECURE AND SEISMICALLY BRACE.

6 GROUND BUS BAR MOUNTED AT +8'-0" AFF, REFER TO RISER FOR SIZE AND ADDITIONAL DETAILS.

7 CONDUIT SLEEVES, REFER TO TELECOM RISER FOR SIZE AND QUANTITY.

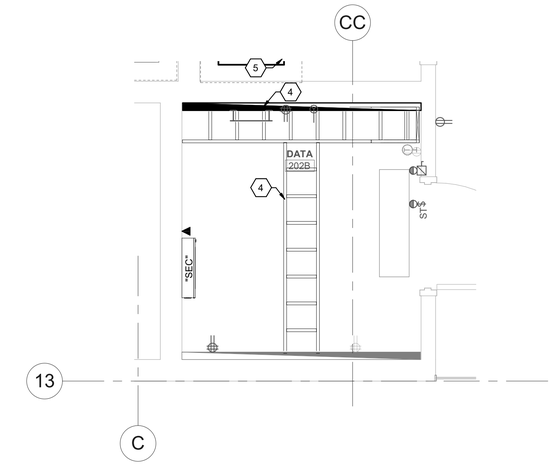

B4 ENLARGED DATA 214 LADDER RACK PLAN
SCALE: 1/2" = 1'-0"

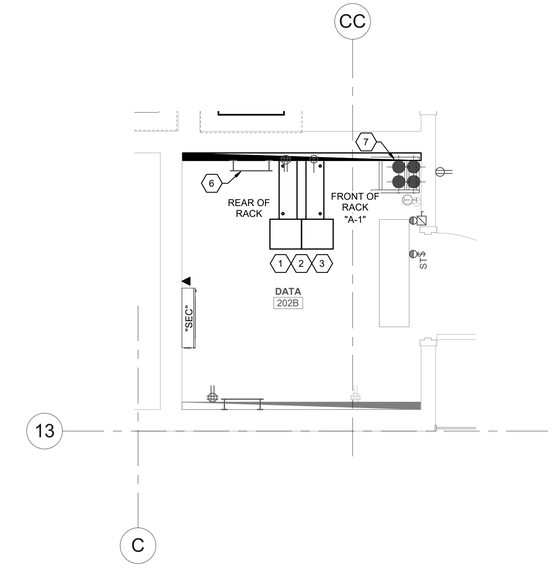

A4 ENLARGED DATA 214 EQUIPMENT RACK PLAN
SCALE: 1/2" = 1'-0"

ARCHITECT 1877

ajc architects
703 east 1700 south
salt lake city, utah 84105
ph: 801.466.8818
fx: 801.466.4411
www.ajcarchitects.com

LICENSED PROFESSIONAL ENGINEER No. 5497590-2202 Christopher Mark Kirkham STATE OF UTAH

10.01.21

CONSULTANT

SPECTRUM ENGINEERS
324 S. State St., Suite 400
Salt Lake City, UT 84111
800-678-7077
801-328-5151
fax: 801-328-5155
www.spectrum-engineers.com

OWNER INFORMATION

PROJECT DESCRIPTION

DUMKE GYMNASTICS TRAINING CENTER:

1825 E. SOUTH CAMPUS DRIVE
SALT LAKE CITY, UT 84112

AHJ STAMP

SHEET NAME:
ENLARGED TELECOM PLANS & RACK ELEVATION

REVISIONS

MARK	DATE	DESCRIPTION

ISSUE DATA

ISSUE DATE:	10.01.21
ISSUE TYPE:	CD
DRAWN BY:	IBC
CHECKED BY:	LSK
PROJECT#:	1877

SHEET NUMBER:
ET401

10/3/2021 1:32:25 PM C:\Users\ibc\Desktop\Revit Local Files\2020\20191093 ELEC Central_IBC-Spectrum.rvt

ALL IDEAS, DESIGNS, ARRANGEMENTS AND PLANS INDICATED OR REPRESENTED BY THIS DRAWING ARE OWNED BY AND THE PROPERTY OF AJC ARCHITECTS PC AND WERE CREATED, EVOLVED AND DEVELOPED FOR USE ON AND IN CONNECTION WITH THE SPECIFIED PROJECT. NONE OF THE IDEAS, DESIGNS, ARRANGEMENTS OR PLANS SHALL BE USED BY OR DISCLOSED TO ANY PERSON, FIRM, OR CORPORATION FOR ANY PURPOSE WHATSOEVER WITHOUT WRITTEN CONSENT OF AJC ARCHITECTS PC. WRITTEN DIMENSIONS ON THESE DRAWINGS SHALL HAVE PRECEDENCE OVER SCALE DIMENSIONS. CONTRACTORS SHALL VERIFY AND BE RESPONSIBLE FOR ALL DIMENSIONS AND CONDITIONS ON THE JOB AND THIS OFFICE MUST BE NOTIFIED OF ANY VARIATION FROM THE DIMENSIONS AND CONDITIONS SHOWN BY THESE DRAWINGS. WARNING: REPRODUCTION HEREOF IS A CRIMINAL OFFENSE UNDER 18 U.S.C. SEC. 506. UNAUTHORIZED DISCLOSURE MAY CONSTITUTE TRADE SECRET MISAPPROPRIATION IN VIOLATION OF 12-24-311 ET. SEQ. AND OTHER LAWS.

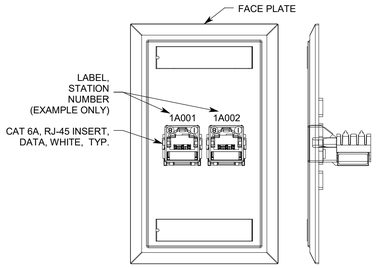

D1 WALL DATA OUTLET
SCALE: NTS

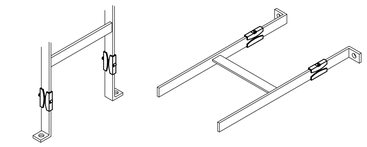

D2 FOOT/WALL ATTACHMENT DETAIL
SCALE: NTS

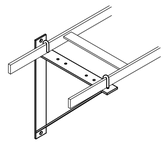

D3 TRIANGLE BRACKET DETAIL
SCALE: NTS

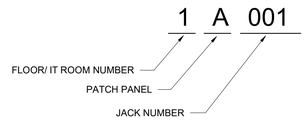

D4 CABLE ID EXAMPLE DETAIL
SCALE: NTS

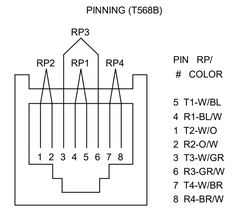

D5 VOICE/DATA OUTLET PINNING DETAIL
SCALE: NTS

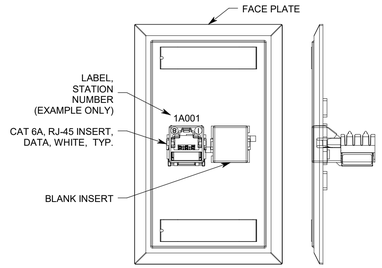

C1 WALL DATA OUTLET
SCALE: NTS

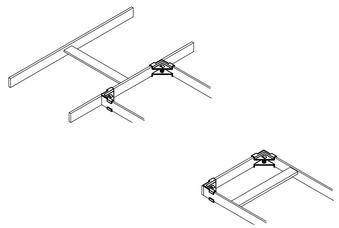

C2 CABLE RUNWAY END/CLOSING SPLICE DETAIL
SCALE: NTS

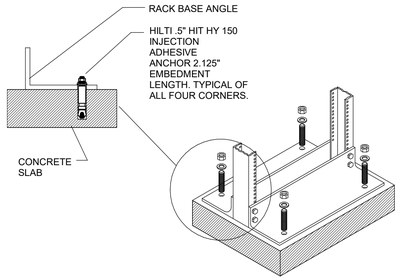

C3 EQUIPMENT RACK/ ANCHORAGE DETAIL
SCALE: NTS

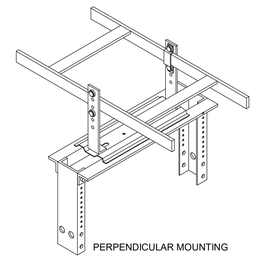

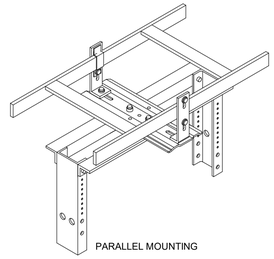

C4 6" CHANNEL RACK-TO-RUNWAY MOUNTING PLATE
SCALE: NTS

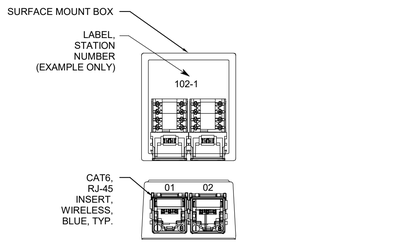

B1 DATA OUTLET
SCALE: NTS

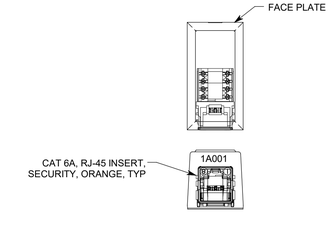

A1 CAMERA DATA OUTLET
SCALE: NTS

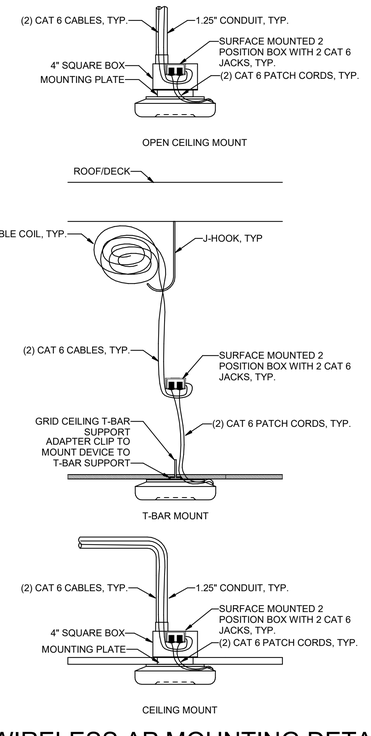

A2 WIRELESS AP MOUNTING DETAIL
SCALE: NTS

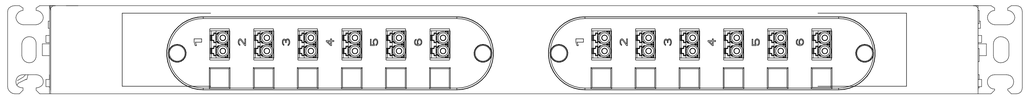

B3 FIBER PATCH PANNEL (FPP1), TYPICAL
SCALE: NTS

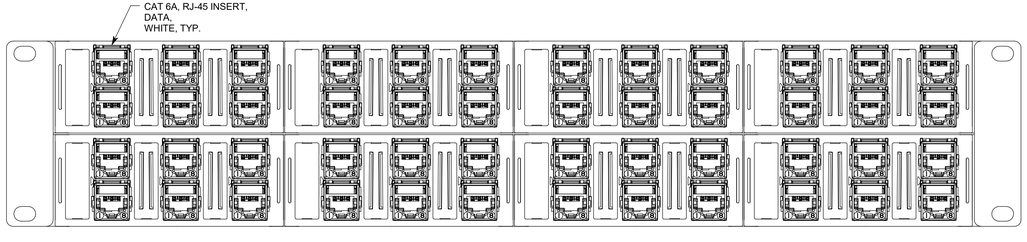

A3 STATION PATCH PANEL, SPP1
SCALE: NTS

ARCHITECT 1877
ajc architects
703 east 1700 south
salt lake city, utah 84105
ph: 801.466.8818
fx: 801.466.4411
www.ajcarchitects.com
LICENSED PROFESSIONAL ENGINEER No. 5497590-2202 Christopher Mark Kirk Jorgensen STATE OF UTAH
10.01.21

CONSULTANT
SPECTRUM ENGINEERS
324 S. State St., Suite 400
Salt Lake City, UT 84111
800-678-7077
801-328-5151
fax: 801-328-5155
www.spectrum-engineers.com

OWNER INFORMATION

PROJECT DESCRIPTION

DUMKE GYMNASTICS TRAINING CENTER:

1825 E. SOUTH CAMPUS DRIVE
SALT LAKE CITY, UT 84112

AHJ STAMP

SHEET NAME:
TELECOM DETAILS

REVISIONS

MARK	DATE	DESCRIPTION

ISSUE DATA

ISSUE DATE:	10.01.21
ISSUE TYPE:	CD
DRAWN BY:	IBC
CHECKED BY:	LSK
PROJECT#:	1877

SHEET NUMBER:
ET501

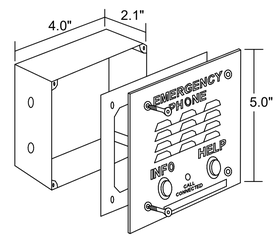

A3 EMERGENCY PHONE (1-DROP)
SCALE: NTS

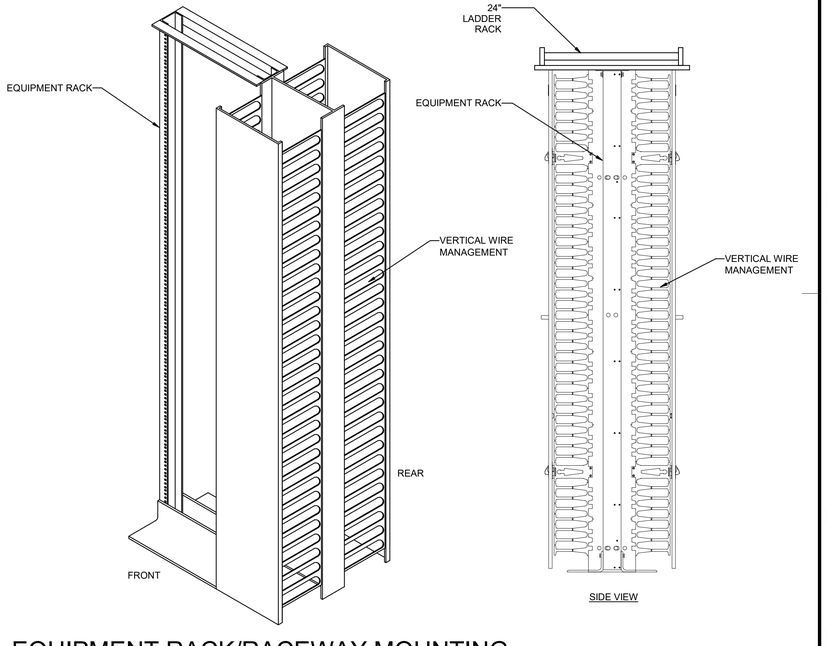

A4 EQUIPMENT RACK/RACEWAY MOUNTING
SCALE: NTS

ARCHITECT 1877

ajc architects

703 east 1700 south
salt lake city, utah 84105
ph: 801.466.8818
fx: 801.466.4411
www.ajcarchitects.com

10.01.21

CONSULTANT

SPECTRUM ENGINEERS

324 S. State St., Suite 400
Salt Lake City, UT 84111
800-678-7077
801-328-5151
fax: 801-328-5155
www.spectrum-engineers.com

OWNER INFORMATION

PROJECT DESCRIPTION

DUMKE GYMNASTICS TRAINING CENTER:

1825 E. SOUTH CAMPUS DRIVE
SALT LAKE CITY, UT 84112

AHJ STAMP

SHEET NAME:

TELECOM DETAILS

REVISIONS

MARK	DATE	DESCRIPTION

ISSUE DATA

ISSUE DATE:	10.01.21
ISSUE TYPE:	CD
DRAWN BY:	IBC
CHECKED BY:	LSK
PROJECT#:	1877

SHEET NUMBER:

ET502

10/3/2021 1:32:21 PM C:\Users\ibc\Desktop\Revit Local Files\2020\20191093 ELEC Central_IBC-Spectrum.rvt
ALL IDEAS, DESIGNS, ARRANGEMENTS AND PLANS INDICATED OR REPRESENTED BY THIS DRAWING ARE OWNED BY AND THE PROPERTY OF AJC ARCHITECTS PC AND WERE CREATED, EVOLVED, AND DEVELOPED FOR USE ON AND IN CONNECTION WITH THE SPECIFIED PROJECT. NONE OF THE IDEAS, DESIGNS, ARRANGEMENTS OR PLANS SHALL BE USED BY OR DISCLOSED TO ANY PERSON, FIRM, OR CORPORATION FOR ANY PURPOSE WHATSOEVER WITHOUT WRITTEN CONSENT OF AJC ARCHITECTS PC.
WRITTEN DIMENSIONS ON THESE DRAWINGS SHALL HAVE PRECEDENCE OVER SCALE DIMENSIONS. CONTRACTORS SHALL VERIFY AND BE RESPONSIBLE FOR ALL DIMENSIONS AND CONDITIONS ON THE JOB AND THIS OFFICE MUST BE NOTIFIED OF ANY VARIATION FROM THE DIMENSIONS AND CONDITIONS SHOWN BY THESE DRAWINGS. WARNING: REPRODUCTION HEREOF IS A CRIMINAL OFFENSE UNDER 18 U.S.C. SEC. 506. UNAUTHORIZED DISCLOSURE MAY CONSTITUTE TRADE SECRET
MISAPPROPRIATION IN VIOLATION OF 1C 24-2-31-1 ET. SEQ. AND OTHER LAWS.

10/3/2021 1:32:20 PM C:\Users\ajc\Desktop\Revit Local Files\2020\20191093 ELEC Central_IBC-Spectrum.rvt

ALL IDEAS, DESIGNS, ARRANGEMENTS AND PLANS INDICATED OR REPRESENTED BY THIS DRAWING ARE OWNED BY AND THE PROPERTY OF AJC ARCHITECTS PC AND WERE CREATED, EVOLVED, AND DEVELOPED FOR USE ON AND IN CONNECTION WITH THE SPECIFIED PROJECT. NONE OF THE IDEAS, DESIGNS, ARRANGEMENTS OR PLANS SHALL BE USED BY OR DISCLOSED TO ANY PERSON, FIRM, OR CORPORATION FOR ANY PURPOSE WHATSOEVER WITHOUT WRITTEN CONSENT OF AJC ARCHITECTS PC. WRITTEN DIMENSIONS ON THESE DRAWINGS SHALL HAVE PRECEDENCE OVER SCALE DIMENSIONS. CONTRACTORS SHALL VERIFY AND BE RESPONSIBLE FOR ALL DIMENSIONS AND CONDITIONS ON THE JOB AND THIS OFFICE MUST BE NOTIFIED OF ANY VARIATION FROM THE DIMENSIONS AND CONDITIONS SHOWN BY THESE DRAWINGS. WARNING: REPRODUCTION HEREOF IS A CRIMINAL OFFENSE UNDER 18 U.S.C. SEC. 506. UNAUTHORIZED DISCLOSURE MAY CONSTITUTE TRADE SECRET MISAPPROPRIATION IN VIOLATION OF 12-24-3 (1) ET. SEQ. AND OTHER LAWS.

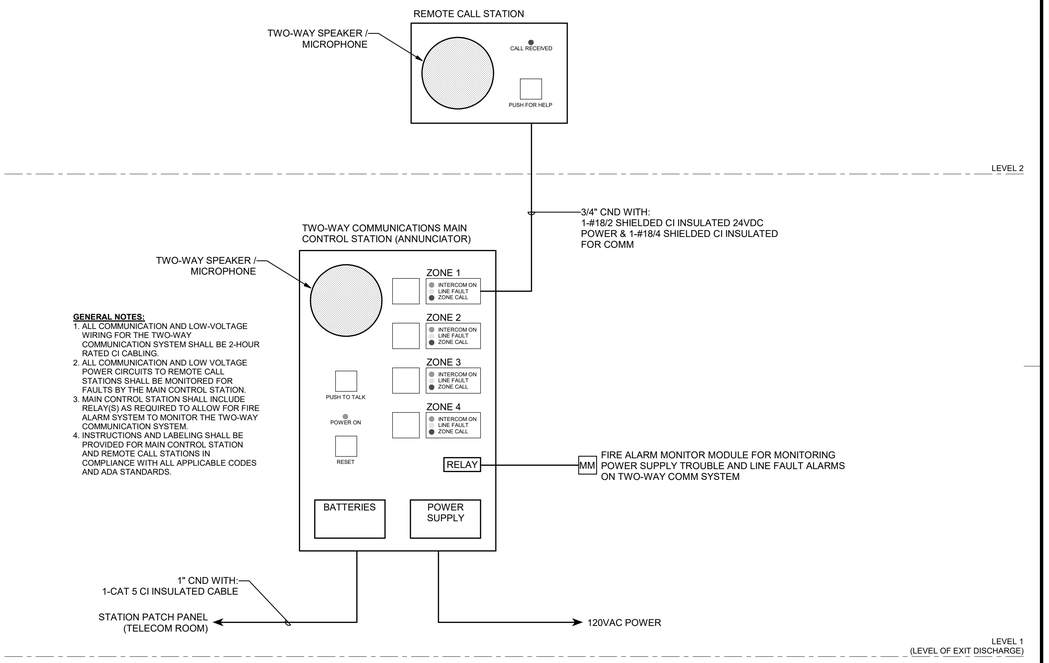

GENERAL NOTES:

1. ALL COMMUNICATION AND LOW-VOLTAGE WIRING FOR THE TWO-WAY COMMUNICATION SYSTEM SHALL BE 2-HOUR RATED CI CABLING.
2. ALL COMMUNICATION AND LOW VOLTAGE POWER CIRCUITS TO REMOTE CALL STATIONS SHALL BE MONITORED FOR FAULTS BY THE MAIN CONTROL STATION.
3. MAIN CONTROL STATION SHALL INCLUDE RELAY(S) AS REQUIRED TO ALLOW FOR FIRE ALARM SYSTEM TO MONITOR THE TWO-WAY COMMUNICATION SYSTEM.
4. INSTRUCTIONS AND LABELING SHALL BE PROVIDED FOR MAIN CONTROL STATION AND REMOTE CALL STATIONS IN COMPLIANCE WITH ALL APPLICABLE CODES AND ADA STANDARDS.

C3 TWO-WAY COMMUNICATION SYSTEM RISER DIAGRAM

SCALE: NTS

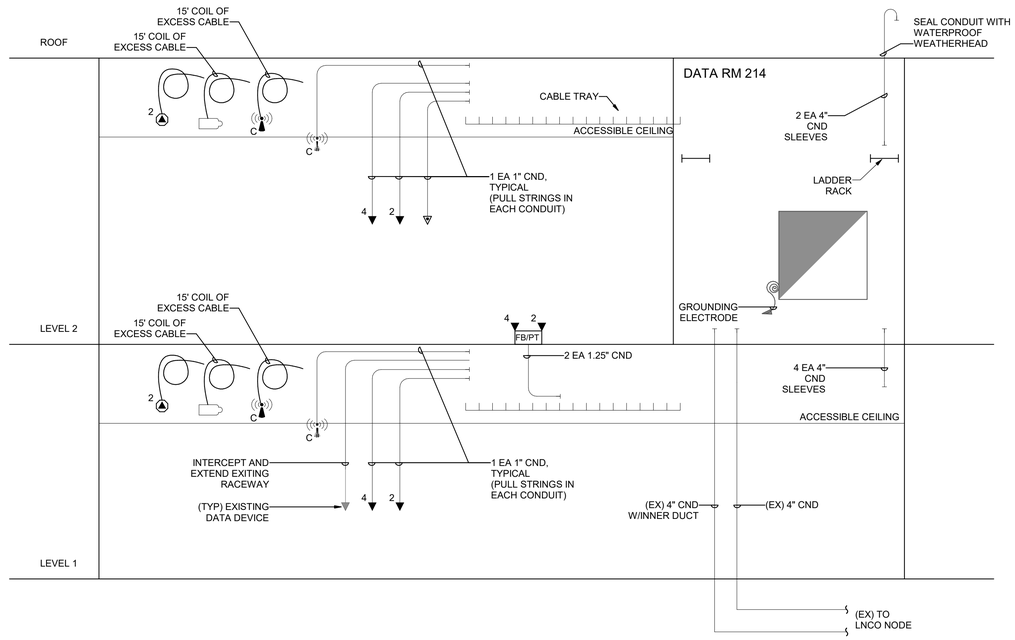

A1 VOICE/ DATA CONDUIT RISER DIAGRAM

SCALE: NTS

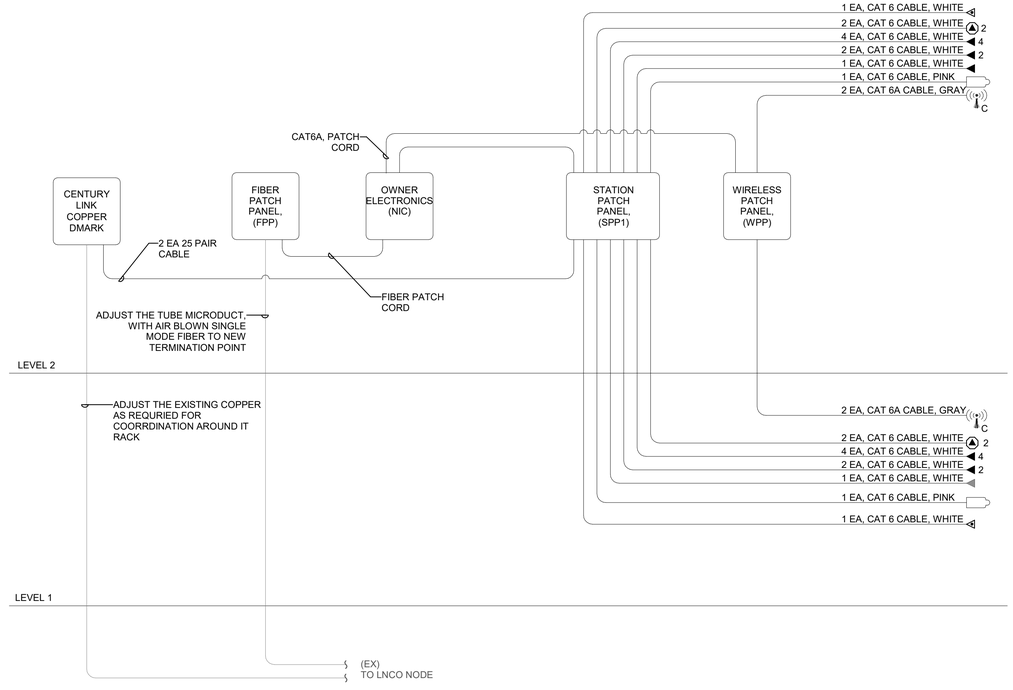

A3 TELECOMMUNICATIONS RISER DIAGRAM

SCALE: NTS

ARCHITECT 1877

ajc architects

703 east 1700 south
salt lake city, utah 84105
ph: 801.466.8818
fx: 801.466.4411
www.ajcarchitects.com

LICENSED PROFESSIONAL ENGINEER No. 5497590-2202 Christopher Mark Lisk Spectrum STATE OF UTAH

10.01.21

CONSULTANT

SPECTRUM ENGINEERS

324 S. State St., Suite 400
Salt Lake City, UT 84111
800-678-7077
801-328-5151
fax: 801-328-5155
www.spectrum-engineers.com

OWNER INFORMATION

PROJECT DESCRIPTION

DUMKE GYMNASTICS TRAINING CENTER:

1825 E. SOUTH CAMPUS DRIVE
SALT LAKE CITY, UT 84112

AHJ STAMP

SHEET NAME:

CONDUIT & TELECOM RISER DIAGRAMS

REVISIONS

MARK	DATE	DESCRIPTION

ISSUE DATA

ISSUE DATE:	10.01.21
ISSUE TYPE:	CD
DRAWN BY:	IBC
CHECKED BY:	LSK
PROJECT#:	1877

SHEET NUMBER:

ET601

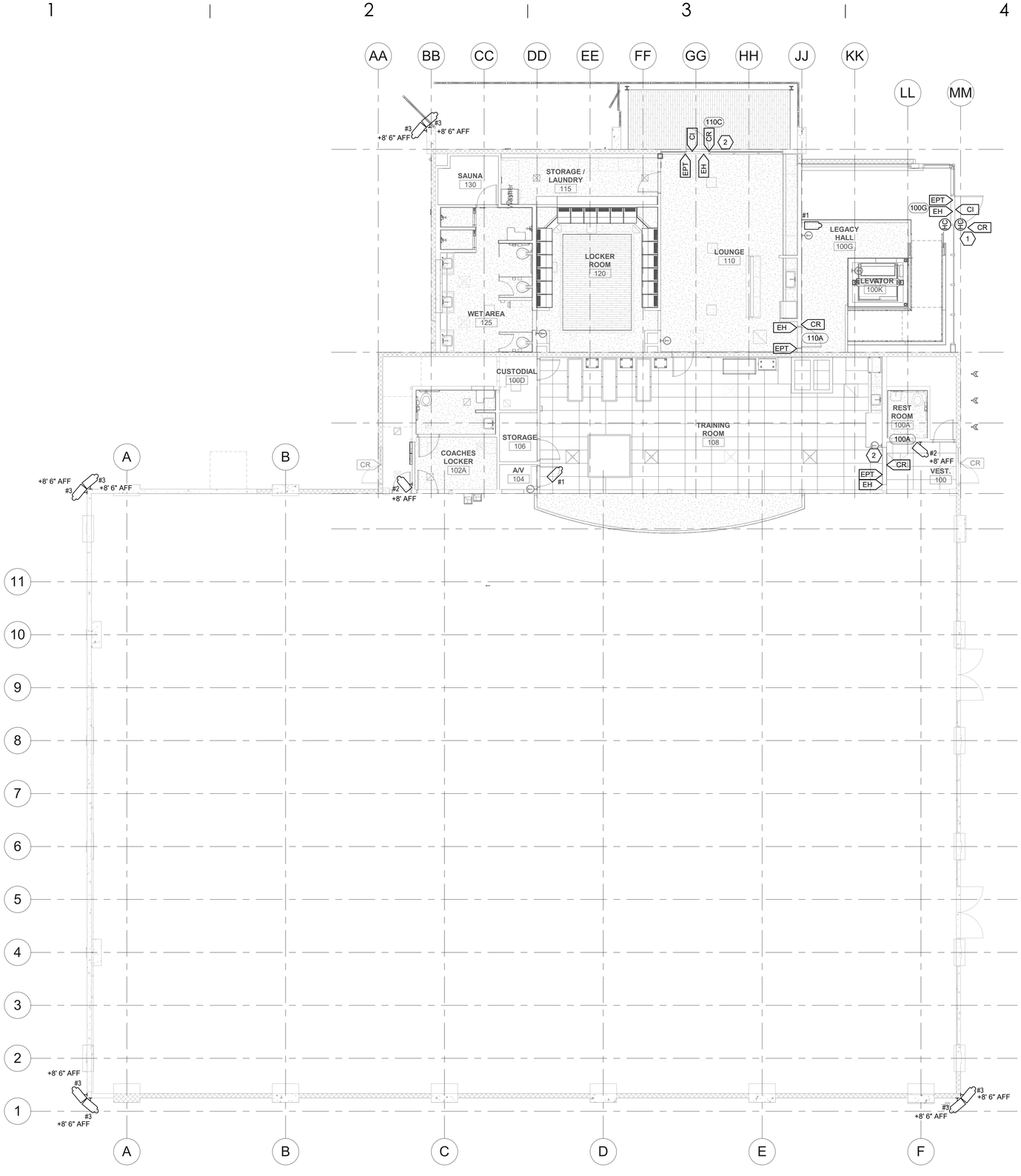

A1 LEVEL 1 AUXILIARY PLAN

SCALE: 1/8" = 1'-0"

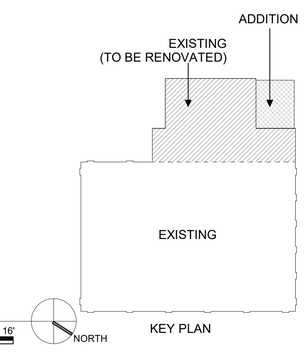

KEY PLAN

GENERAL SHEET NOTES

1 TYPICAL, WHERE POSSIBLE LOCATE CEILING CAMERAS IN THE CENTER OF CEILING TILES.

2 COORDINATE CEILING MOUNTED LOCATIONS WITH LIGHT FIXTURES, LIGHTING CONTROL EQUIPMENT, MECHANICAL EQUIPMENT, ECT AND ADJUST AS REQUIRED.

3 PRIOR TO ROUGH-IN COORDINATE CAMERA LOCATIONS WITH OWNER.

4 ALL PATHWAYS FOR LOW VOLTAGE CABLING NOT REQUIRED TO BE IN CONDUITS SHALL BE ROUTED IN J-HOOK PATHWAYS. CONCEAL ALL PATHWAYS ABOVE ACCESSIBLE CEILING SPACES. DO NOT RUN CABLES IN EXPOSED AREAS. WHERE CONCEALMENT IS NOT POSSIBLE IN EXPOSED AREAS, CONTRACTOR SHALL PROVIDE CONDUIT TO ROUTE CABLING WHERE VISIBLE. ALL CONDUIT SHALL BE PAINED TO MATCH CEILING AND PROVIDED WITH PROTECTIVE BUSHINGS.

SHEET KEYNOTES

1 PROVIDE MULLION MOUNTED ADA OPERATORS AND CARD READER AT THIS DOOR.

2 PROVIDE MULLION MOUNTED CARD READER AT THIS DOOR.

ARCHITECT 1877

ajc architects

703 east 1700 south
salt lake city, utah 84105
ph: 801.466.8818
fx: 801.466.4411
www.ajcarchitects.com

LICENSED PROFESSIONAL ENGINEER
No. 5497590-2202
Christopher Kelly Kobayashi
STATE OF UTAH

10.01.21

CONSULTANT

SPECTRUM ENGINEERS

324 S. State St., Suite 400
Salt Lake City, UT 84111
800-678-7077
801-328-5151
fax: 801-328-5155
www.spectrum-engineers.com

OWNER INFORMATION

PROJECT DESCRIPTION

DUMKE GYMNASTICS TRAINING CENTER:

1825 E. SOUTH CAMPUS DRIVE
SALT LAKE CITY, UT 84112

AHJ STAMP

SHEET NAME:

LEVEL 1 AUXILIARY PLAN

REVISIONS

MARK	DATE	DESCRIPTION

ISSUE DATA

ISSUE DATE:	10.01.21
ISSUE TYPE:	CD
DRAWN BY:	IBC
CHECKED BY:	LSK
PROJECT#:	1877

SHEET NUMBER:

EY101

10/4/2021 7:31:21 AM C:\Users\ibc\Desktop\Revit Local Files\2020\20191093 ELEC Central_IBC-Spectrum.rvt

ALL IDEAS, DESIGNS, ARRANGEMENTS AND PLANS INDICATED OR REPRESENTED BY THIS DRAWING ARE OWNED BY AND THE PROPERTY OF AJC ARCHITECTS PC AND WERE CREATED, EVOLVED, AND DEVELOPED FOR USE ON AND IN CONNECTION WITH THE SPECIFIED PROJECT. NONE OF THE IDEAS, DESIGNS, ARRANGEMENTS OR PLANS SHALL BE USED BY OR DISCLOSED TO ANY PERSON, FIRM, OR CORPORATION FOR ANY PURPOSE WHATSOEVER WITHOUT WRITTEN CONSENT OF AJC ARCHITECTS PC. WRITTEN DIMENSIONS ON THESE DRAWINGS SHALL HAVE PRECEDENCE OVER SCALE DIMENSIONS. CONTRACTORS SHALL VERIFY AND BE RESPONSIBLE FOR ALL DIMENSIONS AND CONDITIONS ON THE JOB AND THIS OFFICE MUST BE NOTIFIED OF ANY VARIATION FROM THE DIMENSIONS AND CONDITIONS SHOWN BY THESE DRAWINGS. WARNING: REPRODUCTION HEREOF IS A CRIMINAL OFFENSE UNDER 18 U.S.C. SEC. 506. UNAUTHORIZED DISCLOSURE MAY CONSTITUTE TRADE SECRET MISAPPROPRIATION IN VIOLATION OF I.C.24-2-31-1 ET. SEQ. AND OTHER LAWS.

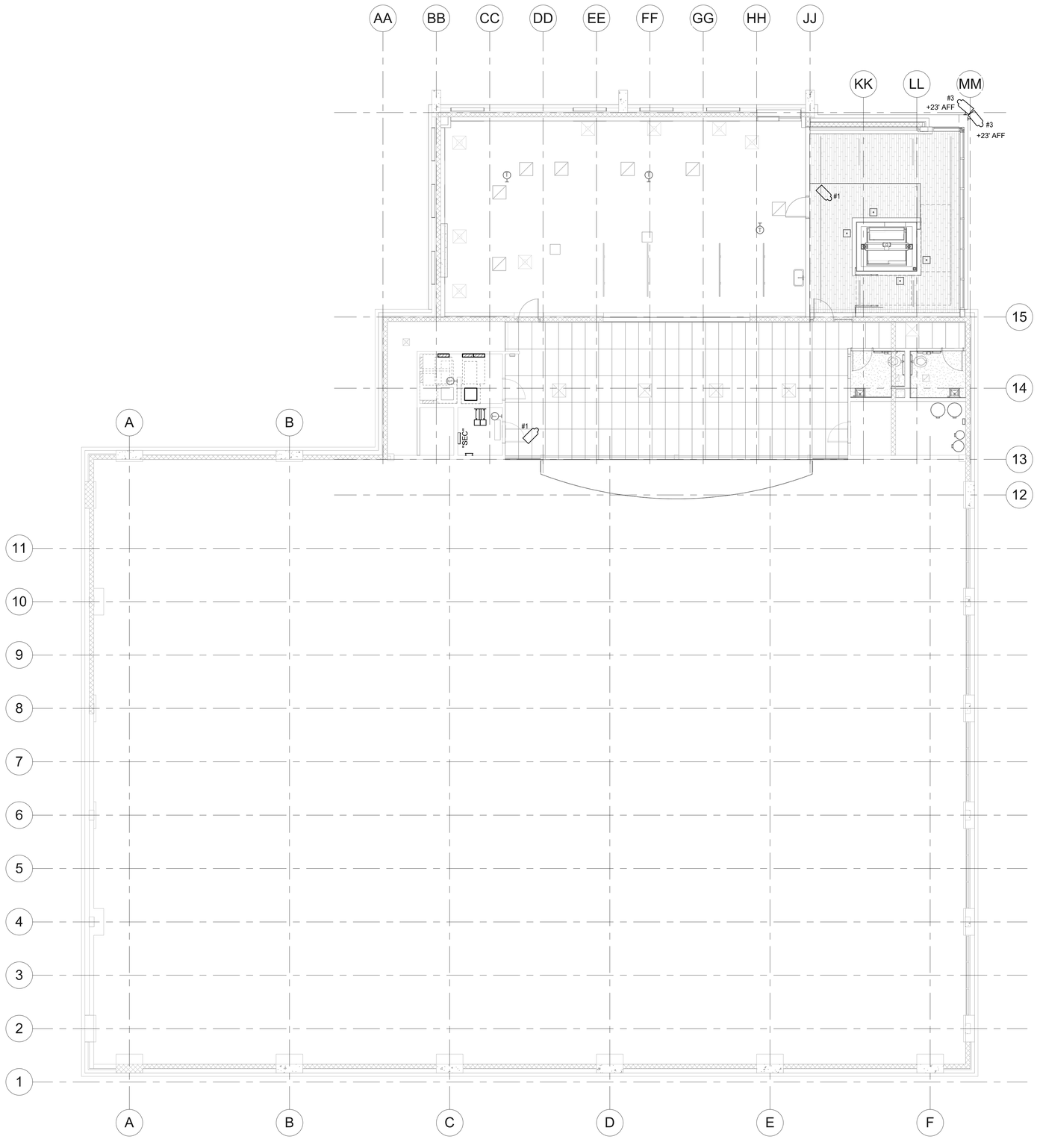

A1 LEVEL 2 AUXILIARY PLAN
SCALE: 1/8" = 1'-0"

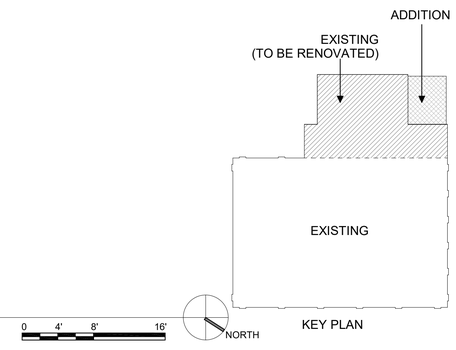

KEY PLAN

0 4' 8' 16'

GENERAL SHEET NOTES

1 TYPICAL, WHERE POSSIBLE LOCATE CEILING CAMERAS IN THE CENTER OF CEILING TILES.

2 COORDINATE CEILING MOUNTED LOCATIONS WITH LIGHT FIXTURES, LIGHTING CONTROL EQUIPMENT, MECHANICAL EQUIPMENT, ECT AND ADJUST AS REQUIRED.

3 PRIOR TO ROUGH-IN COORDINATE CAMERA LOCATIONS WITH OWNER.

4 ALL PATHWAYS FOR LOW VOLTAGE CABLING NOT REQUIRED TO BE IN CONDUITS SHALL BE ROUTED IN J-HOOK PATHWAYS. CONCEAL ALL PATHWAYS ABOVE ACCESSIBLE CEILING SPACES. DO NOT RUN CABLES IN EXPOSED AREAS. WHERE CONCEALMENT IS NOT POSSIBLE IN EXPOSED AREAS, CONTRACTOR SHALL PROVIDE CONDUIT TO ROUTE CABLING WHERE VISIBLE. ALL CONDUIT SHALL BE PAINED TO MATCH CEILING AND PROVIDED WITH PROTECTIVE BUSHINGS.

SHEET KEYNOTES

ARCHITECT 1877

ajc architects

703 east 1700 south
salt lake city, utah 84105
ph: 801.466.8818
fx: 801.466.4411
www.ajcarchitects.com

LICENSED PROFESSIONAL ENGINEER No. 5497590-2202 Christopher Kelly Kohayashi STATE OF UTAH

10.01.21

CONSULTANT

SPECTRUM ENGINEERS

324 S. State St., Suite 400
Salt Lake City, UT 84111
800-678-7077
801-328-5151
fax: 801-328-5155
www.spectrum-engineers.com

OWNER INFORMATION

PROJECT DESCRIPTION

DUMKE GYMNASTICS TRAINING CENTER:

1825 E. SOUTH CAMPUS DRIVE
SALT LAKE CITY, UT 84112

AHJ STAMP

SHEET NAME:

LEVEL 2 AUXILIARY PLAN

REVISIONS

MARK	DATE	DESCRIPTION

ISSUE DATA

ISSUE DATE: 10.01.21
ISSUE TYPE: CD
DRAWN BY: IBC
CHECKED BY: LSK
PROJECT#: 1877

SHEET NUMBER:

EY102

10/3/2021 1:32:14 PM C:\Users\ibc\Desktop\Revit Local Files\2020\20191093 ELEC Central_IBC-Spectrum.rvt

ALL IDEAS, DESIGNS, ARRANGEMENTS AND PLANS INDICATED OR REPRESENTED BY THIS DRAWING ARE OWNED BY AND THE PROPERTY OF AJC ARCHITECTS PC AND WERE CREATED, EVOLVED, AND DEVELOPED FOR USE ON AND IN CONNECTION WITH THE SPECIFIED PROJECT. NONE OF THE IDEAS, DESIGNS, ARRANGEMENTS OR PLANS SHALL BE USED BY OR DISCLOSED TO ANY PERSON, FIRM, OR CORPORATION FOR ANY PURPOSE WHATSOEVER WITHOUT WRITTEN CONSENT OF AJC ARCHITECTS PC. WRITTEN DIMENSIONS ON THESE DRAWINGS SHALL HAVE PRECEDENCE OVER SCALE DIMENSIONS. CONTRACTORS SHALL VERIFY AND BE RESPONSIBLE FOR ALL DIMENSIONS AND CONDITIONS ON THE JOB AND THIS OFFICE MUST BE NOTIFIED OF ANY VARIATION FROM THE DIMENSIONS AND CONDITIONS SHOWN BY THESE DRAWINGS. WARNING: REPRODUCTION HEREOF IS A CRIMINAL OFFENSE UNDER 18 U.S.C. SEC. 506. UNAUTHORIZED DISCLOSURE MAY CONSTITUTE TRADE SECRET MISAPPROPRIATION IN VIOLATION OF I.C.24-2-31-1 ET. SEQ. AND OTHER LAWS.

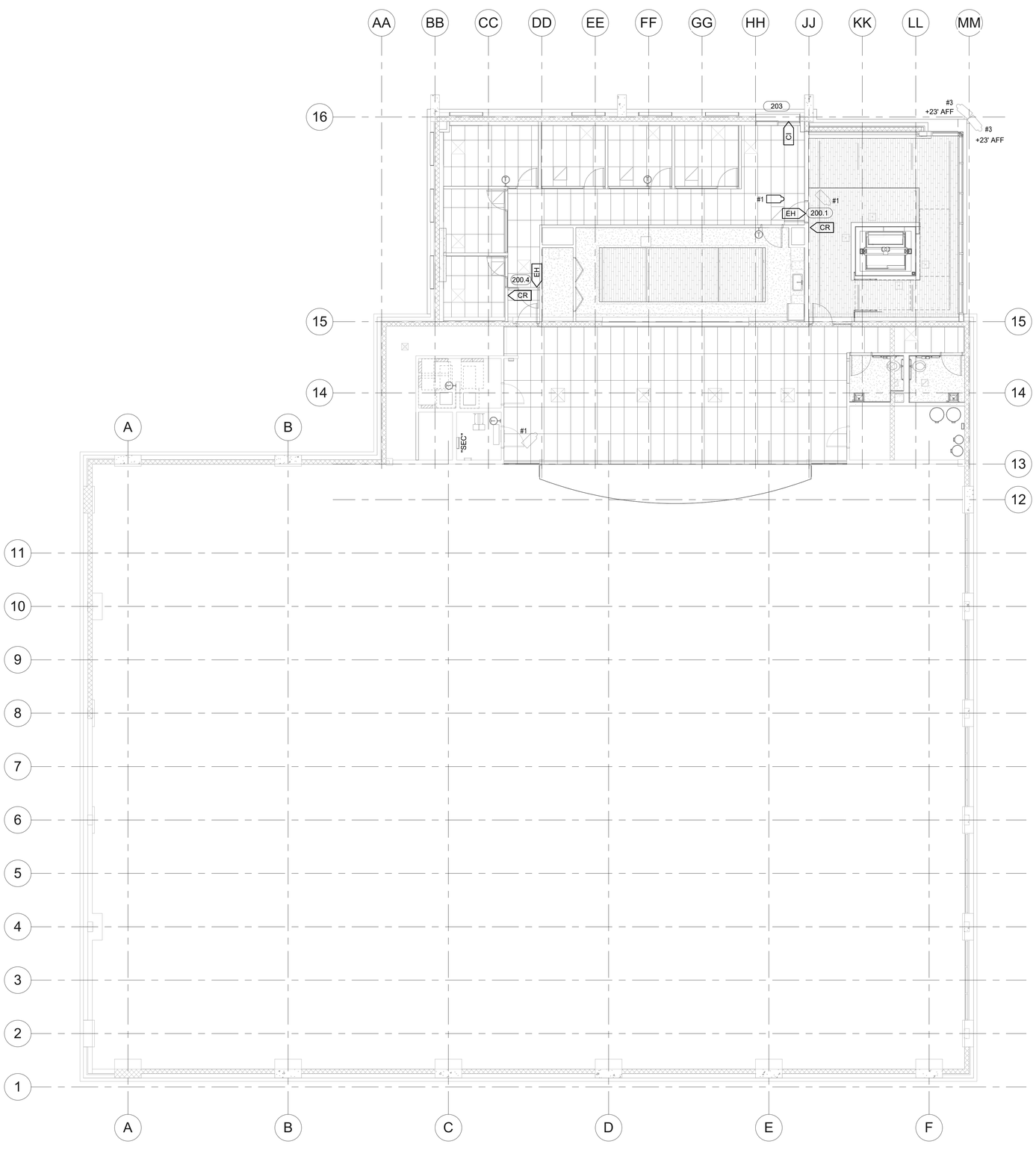

A1 LEVEL 2 AUXILIARY PLAN ADD ALTERNATE #1

SCALE: 1/8" = 1'-0"

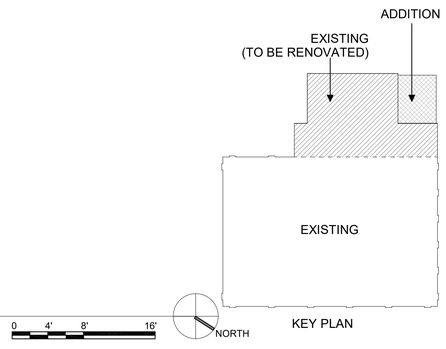

KEY PLAN

0 4' 8' 16'

GENERAL SHEET NOTES

1 TYPICAL, WHERE POSSIBLE LOCATE CEILING CAMERAS IN THE CENTER OF CEILING TILES.

2 COORDINATE CEILING MOUNTED LOCATIONS WITH LIGHT FIXTURES, LIGHTING CONTROL EQUIPMENT, MECHANICAL EQUIPMENT, ECT AND ADJUST AS REQUIRED.

3 PRIOR TO ROUGH-IN COORDINATE CAMERA LOCATIONS WITH OWNER.

4 ALL PATHWAYS FOR LOW VOLTAGE CABLING NOT REQUIRED TO BE IN CONDUITS SHALL BE ROUTED IN J-HOOK PATHWAYS. CONCEAL ALL PATHWAYS ABOVE ACCESSIBLE CEILING SPACES. DO NOT RUN CABLES IN EXPOSED AREAS. WHERE CONCEALMENT IS NOT POSSIBLE IN EXPOSED AREAS, CONTRACTOR SHALL PROVIDE CONDUIT TO ROUTE CABLING WHERE VISIBLE. ALL CONDUIT SHALL BE PAINED TO MATCH CEILING AND PROVIDED WITH PROTECTIVE BUSHINGS.

SHEET KEYNOTES

ARCHITECT 1877

ajc architects

703 east 1700 south
salt lake city, utah 84105
ph: 801.466.8818
fx: 801.466.4411
www.ajcarchitects.com

LICENSED PROFESSIONAL ENGINEER No. 5497590-2202 Christopher Kelley Kohayashi STATE OF UTAH

10.01.21

CONSULTANT

SPECTRUM ENGINEERS

324 S. State St., Suite 400
Salt Lake City, UT 84111
800-678-7077
801-328-5151
fax: 801-328-5155
www.spectrum-engineers.com

OWNER INFORMATION

PROJECT DESCRIPTION

DUMKE GYMNASTICS TRAINING CENTER:

1825 E. SOUTH CAMPUS DRIVE
SALT LAKE CITY, UT 84112

AHJ STAMP

SHEET NAME:

LEVEL 2 AUXILIARY PLAN ADD ALTERNATE #1

REVISIONS

MARK	DATE	DESCRIPTION

ISSUE DATA

ISSUE DATE: 10.01.21
ISSUE TYPE: CD
DRAWN BY: IBC
CHECKED BY: LSK
PROJECT#: 1877

SHEET NUMBER:

EY102.1

10/3/2021 1:32:11 PM C:\Users\ibc\Desktop\Revit Local Files\2020\20191093 ELEC Central_IBC-Spectrum.rvt

ALL IDEAS, DESIGNS, ARRANGEMENTS AND PLANS INDICATED OR REPRESENTED BY THIS DRAWING ARE OWNED BY AND THE PROPERTY OF AJC ARCHITECTS PC AND WERE CREATED, EVOLVED, AND DEVELOPED FOR USE ON AND IN CONNECTION WITH THE SPECIFIED PROJECT. NONE OF THE IDEAS, DESIGNS, ARRANGEMENTS OR PLANS SHALL BE USED BY OR DISCLOSED TO ANY PERSON, FIRM, OR CORPORATION FOR ANY PURPOSE WHATSOEVER WITHOUT WRITTEN CONSENT OF AJC ARCHITECTS PC. WRITTEN DIMENSIONS ON THESE DRAWINGS SHALL HAVE PRECEDENCE OVER SCALE DIMENSIONS. CONTRACTORS SHALL VERIFY AND BE RESPONSIBLE FOR ALL DIMENSIONS AND CONDITIONS ON THE JOB AND THIS OFFICE MUST BE NOTIFIED OF ANY VARIATION FROM THE DIMENSIONS AND CONDITIONS SHOWN BY THESE DRAWINGS. WARNING: REPRODUCTION HEREOF IS A CRIMINAL OFFENSE UNDER 18 U.S.C. SEC. 506. UNAUTHORIZED DISCLOSURE MAY CONSTITUTE TRADE SECRET MISAPPROPRIATION IN VIOLATION OF I.C.24-2-31-1 ET. SEQ. AND OTHER LAWS.

ALL IDEAS, DESIGNS, ARRANGEMENTS AND PLANS INDICATED OR REPRESENTED BY THIS DRAWING ARE OWNED BY AND THE PROPERTY OF AJC ARCHITECTS PC AND WERE CREATED, EVOLVED, AND DEVELOPED FOR USE ON AND IN CONNECTION WITH THE SPECIFIED PROJECT. NONE OF THE IDEAS, DESIGNS, ARRANGEMENTS OR PLANS SHALL BE USED BY OR DISCLOSED TO ANY PERSON, FIRM, OR CORPORATION FOR ANY PURPOSE WHATSOEVER WITHOUT WRITTEN CONSENT OF AJC ARCHITECTS PC. WRITTEN DIMENSIONS ON THESE DRAWINGS SHALL HAVE PRECEDENCE OVER SCALE DIMENSIONS. CONTRACTORS SHALL VERIFY AND BE RESPONSIBLE FOR ALL DIMENSIONS AND CONDITIONS ON THE JOB AND THIS OFFICE MUST BE NOTIFIED OF ANY VARIATION FROM THE DIMENSIONS AND CONDITIONS SHOWN BY THESE DRAWINGS. WARNING: REPRODUCTION HEREOF IS A CRIMINAL OFFENCE UNDER 18 U.S.C. SEC. 506. UNAUTHORIZED DISCLOSURE MAY CONSTITUTE TRADE SECRET MISAPPROPRIATION IN VIOLATION OF 17 C.F.R. 240.10B-5 AND OTHER LAWS.

10/3/2021 1:32:07 PM C:\Users\ibc\Desktop\Revit Local Files\2020\20191093 ELEC Central_IBC-Spectrum.rvt



A1 CAMERA - ACCESSIBLE CEILING MOUNT DETAIL
SCALE: NTS

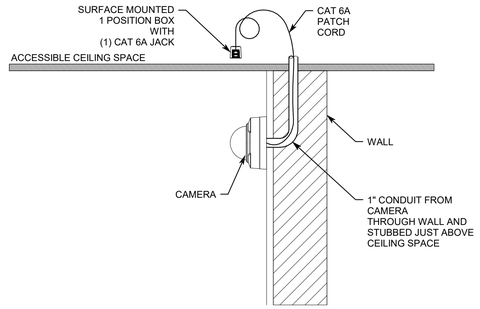

D3 CAMERA - WALL MOUNT DETAIL
SCALE: NTS

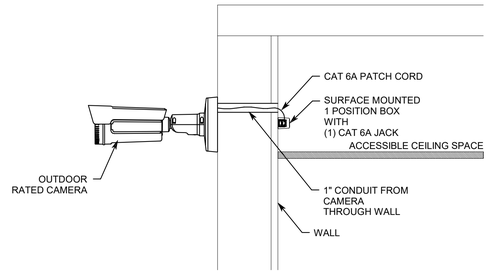

D4 CAMERA - EXTERIOR WALL MOUNT DETAIL
SCALE: NTS

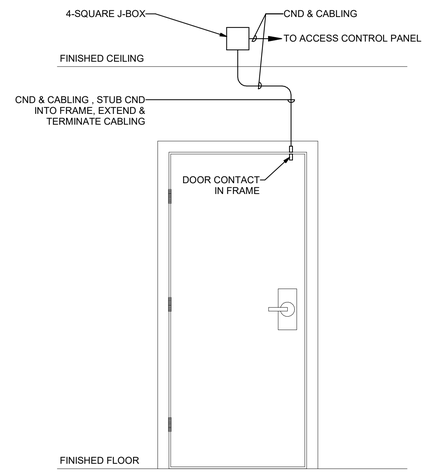

B3 SINGLE DOOR WITH DOOR CONTACT DETAIL
SCALE: NTS

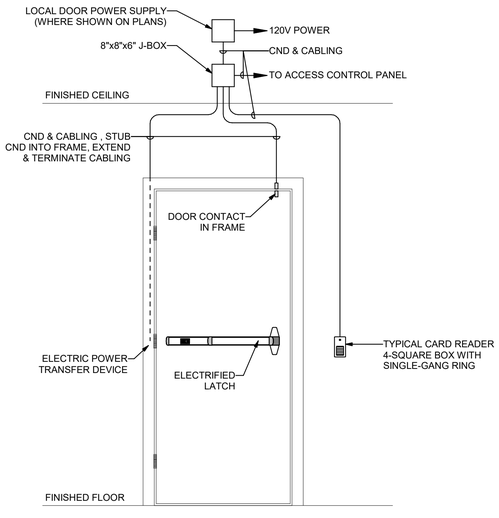

B4 SINGLE DOOR ELECTRIFIED LATCH EXIT DEVICE DETAIL
SCALE: NTS

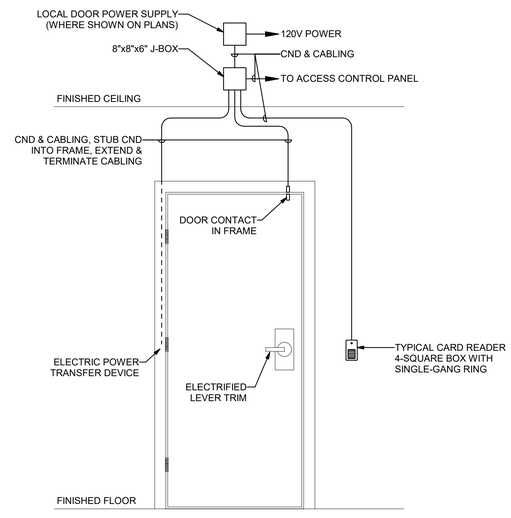

A3 SINGLE DOOR ELECTRIFIED LEVER TRIM DEVICE DETAIL
SCALE: NTS

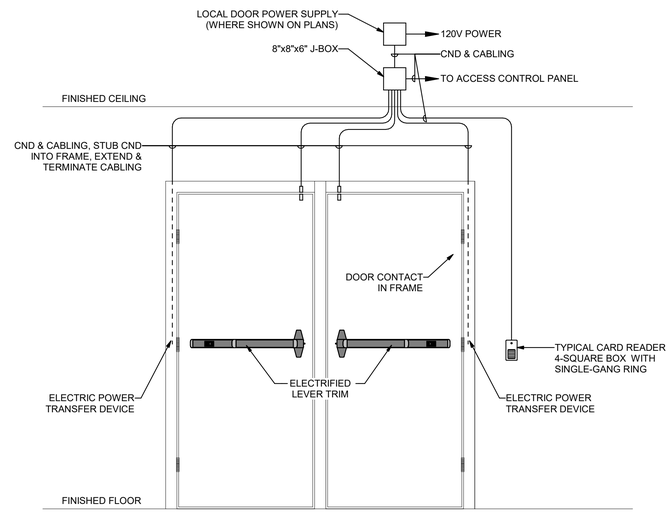

A4 DOUBLE DOOR ELECTRIFIED LATCH EXIT DEVICE DETAIL
SCALE: NTS

ARCHITECT 1877
ajc architects
703 east 1700 south
salt lake city, utah 84105
ph: 801.466.8818
fx: 801.466.4411
www.ajcarchitects.com

LICENSED PROFESSIONAL ENGINEER
No. 5497590-2202
Christopher Mark Kirkham
STATE OF UTAH

10.01.21

CONSULTANT
SPECTRUM ENGINEERS
324 S. State St., Suite 400
Salt Lake City, UT 84111
800-678-7077
801-328-5151
fax: 801-328-5155
www.spectrum-engineers.com

OWNER INFORMATION

PROJECT DESCRIPTION

DUMKE GYMNASTICS TRAINING CENTER:

1825 E. SOUTH CAMPUS DRIVE
SALT LAKE CITY, UT 84112

AHJ STAMP

SHEET NAME:
AUXILIARY DETAILS

REVISIONS

MARK	DATE	DESCRIPTION

ISSUE DATA

ISSUE DATE:	10.01.21
ISSUE TYPE:	CD
DRAWN BY:	IBC
CHECKED BY:	LSK
PROJECT#:	1877

SHEET NUMBER:
EY501

10/3/2021 1:32:06 PM C:\Users\ibc\Desktop\Revit Local Files\2020\20191093 ELEC Central_IBC-Spectrum.rvt

ALL IDEAS, DESIGNS, ARRANGEMENTS AND PLANS INDICATED OR REPRESENTED BY THIS DRAWING ARE OWNED BY AND THE PROPERTY OF AJC ARCHITECTS PC AND WERE CREATED, EVOLVED AND DEVELOPED FOR USE ON AND IN CONNECTION WITH THE SPECIFIED PROJECT. NONE OF THE IDEAS, DESIGNS, ARRANGEMENTS OR PLANS SHALL BE USED BY OR DISCLOSED TO ANY PERSON, FIRM OR CORPORATION FOR ANY PURPOSE WHATSOEVER WITHOUT WRITTEN CONSENT OF AJC ARCHITECTS PC. WRITTEN DIMENSIONS ON THESE DRAWINGS SHALL HAVE PRECEDENCE OVER SCALE DIMENSIONS. CONTRACTORS SHALL VERIFY AND BE RESPONSIBLE FOR ALL DIMENSIONS AND CONDITIONS ON THE JOB AND THIS OFFICE MUST BE NOTIFIED OF ANY VARIATION FROM THE DIMENSIONS AND CONDITIONS SHOWN BY THESE DRAWINGS. WARNING: REPRODUCTION HEREOF IS A CRIMINAL OFFENSE UNDER 18 U.S.C. SEC. 506. UNAUTHORIZED DISCLOSURE MAY CONSTITUTE TRADE SECRET MISAPPROPRIATION IN VIOLATION OF 12.24.2-11 ET. SEQ. AND OTHER LAWS.

ACCESS CONTROL SYSTEM CONDUIT AND CABLING SCHEDULE

—A—	1" CND W/ (1) #22/6 TWSP, (2) #22/2 TSP, (1) #18/2 TWP, (1) #12 TWP
—B—	0.75" CND W/ (1) #12/2 TWP
—C—	0.75" CND W/ (2) #22/2 TWP

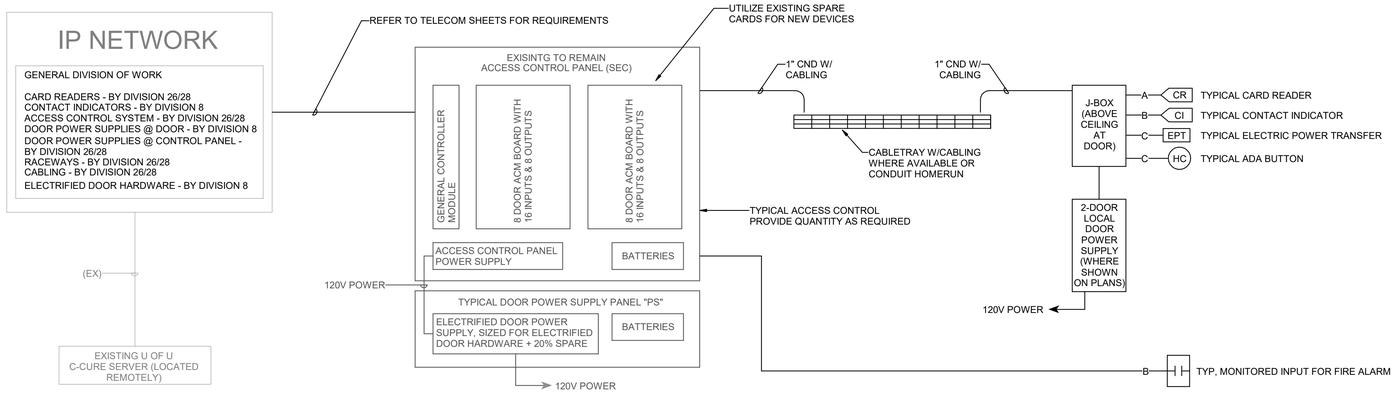

C2 ACCESS CONTROL RISER DIAGRAM
SCALE: NTS

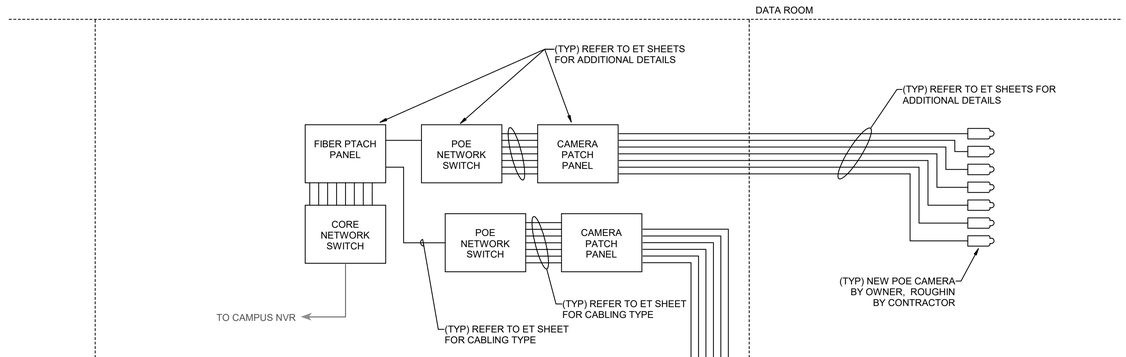

CAMERA TYPE SCHEDULE

SYMBOL	CAMERA TAG	DESCRIPTION	BOD/SCOPE
	#1	INTERIOR CELING MOUNTED SECUIRITY CAMERA	OFOI
	#2	INTERIOR WALL MOUNTED SECURITY CAMERA	OFOI
	#3	EXTERIOR CORNER MOUNTED SECURITY CAMERA	OFOI

A3 CCTV RISER DIAGRAM
SCALE: NTS

ARCHITECT 1877
ajc architects
703 east 1700 south
salt lake city, utah 84105
ph: 801.466.8818
fx: 801.466.4411
www.ajcarchitects.com
LICENSED PROFESSIONAL ENGINEER No. 5497590-2202 Christopher Kirkham STATE OF UTAH
10.01.21
CONSULTANT
SPECTRUM ENGINEERS
324 S. State St., Suite 400
Salt Lake City, UT 84111
800-678-7077
801-328-5151
fax: 801-328-5155
www.spectrum-engineers.com
OWNER INFORMATION

PROJECT DESCRIPTION

DUMKE GYMNASTICS TRAINING CENTER:

1825 E. SOUTH CAMPUS DRIVE
SALT LAKE CITY, UT 84112

AHJ STAMP

SHEET NAME:
AUXILIARY RISER DIAGRAMS

REVISIONS

MARK	DATE	DESCRIPTION

ISSUE DATA

ISSUE DATE:	10.01.21
ISSUE TYPE:	CD
DRAWN BY:	IBC
CHECKED BY:	LSK
PROJECT#:	1877

SHEET NUMBER:
EY601

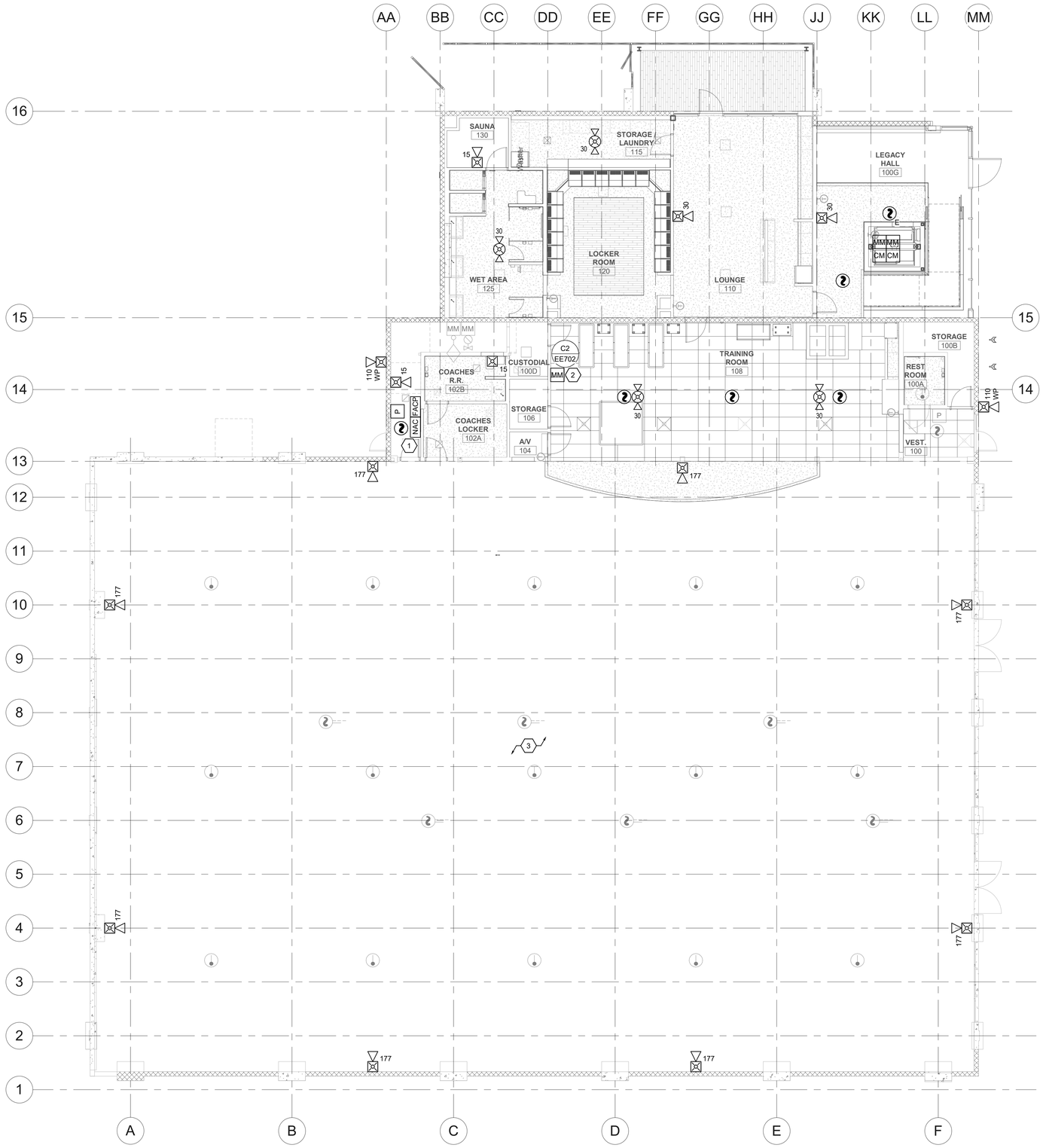

A1 LEVEL 1 FIRE ALARM PLAN

SCALE: 1/8" = 1'-0"

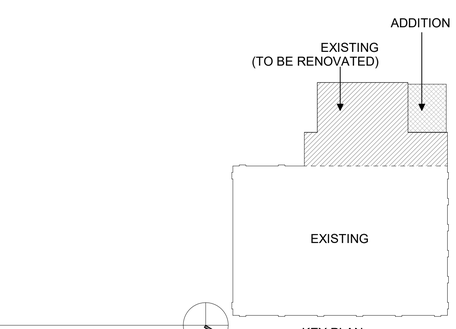

KEY PLAN

0 4' 8' 16'

GENERAL SHEET NOTES

1 FIRE ALARM NOTIFICATION DEVICES SHALL BE ADJUSTED AS REQUIRED TO PROVIDE PROPER COVERAGE AND SOUND LEVELS.

2 ALL FIRE ALARM DEVICES SHALL BE MOUNTED SUCH THAT THEY ARE VISIBLE FROM THE GROUND AND EASILY ACCESSIBLE FOR MAINTENANCE.

3 CONTROL MODULE AND RELAY TIED INTO BAS PANEL FOR INPUT TO FAN SHUTDOWN UPON ACTIVATION OF DUCT OR SMOKE DETECTORS. COORDINATE RELAY SIZE AND VOLTAGE WITH EQUIPMENT.

4 PROVIDE POTTER SASH-24 WEATHERPROOF EXTERIOR HORN/STROBE OR EQUAL AT FIRE DEPARTMENT CONNECTION LOCATION. DEVICE SHALL BE 24VDC POWERED BY FACP AND DIRECTLY WIRED THROUGH FLOW SWITCH SUCH THAT THE DEVICE WILL OPERATE UPON WATER FLOW AND SILENCE ONLY UPON CESSATION OF WATER FLOW. COORDINATE AND ADJUST LOCATION TO WITHIN 5 FEET OF FIRE DEPARTMENT CONNECTION LOCATION.

5 TYPICAL: CORRIDOR SMOKE DETECTOR SPACING SHALL NOT EXCEED 30FT ON CENTER.

6 ALL EXPOSED RACEWAYS LOCATED IN LABS SHALL BE ROUTED HORIZONTALLY 8FT OR HIGHER UNLESS NOTED OTHERWISE.

SHEET KEYNOTES

1 EXTEND EXISTING AND NEW FIRE ALARM CIRCUITS/LOOPS TO NEW PANEL LOCATION.

2 PROVIDE EN GAUGE EVM MODULE FOR FIRE EXTINGUISHER TIED TO FIRE ALARM SYSTEM.

3 ALL EXISTING FIRE ALARM DEVICE CIRCUITS THAT ARE TO REMAIN SHALL BE INTERCEPTED AND EXTENDED TO TO FIRE ALARM CONTROL PANEL.

ARCHITECT 1877

ajc architects

703 east 1700 south
salt lake city, utah 84105
ph: 801.466.8818
fx: 801.466.4411
www.ajcarchitects.com

LICENSED PROFESSIONAL ENGINEER No. 5497590-2202 Christopher Kelly Kobayashi STATE OF UTAH

10.01.21

CONSULTANT

SPECTRUM ENGINEERS

324 S. State St., Suite 400
Salt Lake City, UT 84111
800-678-7077
801-328-5151
fax: 801-328-5155
www.spectrum-engineers.com

OWNER INFORMATION

PROJECT DESCRIPTION

DUMKE GYMNASTICS TRAINING CENTER:

1825 E. SOUTH CAMPUS DRIVE
SALT LAKE CITY, UT 84112

AHJ STAMP

SHEET NAME:

LEVEL 1 FIRE ALARM PLAN

REVISIONS

MARK	DATE	DESCRIPTION

ISSUE DATA

ISSUE DATE:	10.01.21
ISSUE TYPE:	CD
DRAWN BY:	IBC
CHECKED BY:	LSK
PROJECT#:	1877

SHEET NUMBER:

FA101

10/3/2021 1:32:04 PM C:\Users\ibc\Desktop\Revit Local Files\2020\20191093 ELEC Central_IBC-Spectrum.rvt

ALL IDEAS, DESIGNS, ARRANGEMENTS AND PLANS INDICATED OR REPRESENTED BY THIS DRAWING ARE OWNED BY AND THE PROPERTY OF AJC ARCHITECTS PC AND WERE CREATED, EVOLVED, AND DEVELOPED FOR USE ON AND IN CONNECTION WITH THE SPECIFIED PROJECT. NONE OF THE IDEAS, DESIGNS, ARRANGEMENTS OR PLANS SHALL BE USED BY OR DISCLOSED TO ANY PERSON, FIRM, OR CORPORATION FOR ANY PURPOSE WHATSOEVER WITHOUT WRITTEN CONSENT OF AJC ARCHITECTS PC. WRITTEN DIMENSIONS ON THESE DRAWINGS SHALL HAVE PRECEDENCE OVER SCALE DIMENSIONS. CONTRACTORS SHALL VERIFY AND BE RESPONSIBLE FOR ALL DIMENSIONS AND CONDITIONS ON THE JOB AND THIS OFFICE MUST BE NOTIFIED OF ANY VARIATION FROM THE DIMENSIONS AND CONDITIONS SHOWN BY THESE DRAWINGS. WARNING: REPRODUCTION HEREOF IS A CRIMINAL OFFENSE UNDER 18 U.S.C. SEC. 506. UNAUTHORIZED DISCLOSURE MAY CONSTITUTE TRADE SECRET MISAPPROPRIATION IN VIOLATION OF 12-24-2-311 ET. SEQ. AND OTHER LAWS.

ALL IDEAS, DESIGNS, ARRANGEMENTS AND PLANS INDICATED OR REPRESENTED BY THIS DRAWING ARE OWNED BY AND THE PROPERTY OF AJC ARCHITECTS PC AND WERE PREPARED, EVOLVED AND DEVELOPED FOR USE ON AND IN CONNECTION WITH THE SPECIFIED PROJECT. NONE OF THE IDEAS, DESIGNS, ARRANGEMENTS OR PLANS SHALL BE USED BY OR DISCLOSED TO ANY PERSON, FIRM OR CORPORATION FOR ANY PURPOSE WHATSOEVER WITHOUT WRITTEN CONSENT OF AJC ARCHITECTS PC. WRITTEN DIMENSIONS ON THESE DRAWINGS SHALL HAVE PRECEDENCE OVER SCALE DIMENSIONS. CONTRACTORS SHALL VERIFY AND BE RESPONSIBLE FOR ALL DIMENSIONS AND CONDITIONS ON THE JOB AND THIS OFFICE MUST BE NOTIFIED OF ANY VARIATION FROM THE DIMENSIONS AND CONDITIONS SHOWN BY THESE DRAWINGS. WARNING: REPRODUCTION HEREOF IS A CRIMINAL OFFENCE UNDER 18 U.S.C. SEC. 506. UNAUTHORIZED DISCLOSURE MAY CONSTITUTE TRADE SECRET MISAPPROPRIATION IN VIOLATION OF 12-44-311 ET. SEQ. AND OTHER LAWS.

10/3/2021 1:31:59 PM C:\Users\ibc\Desktop\Revit Local Files\2020\20191093 ELEC Central_IBC-Spectrum.rvt

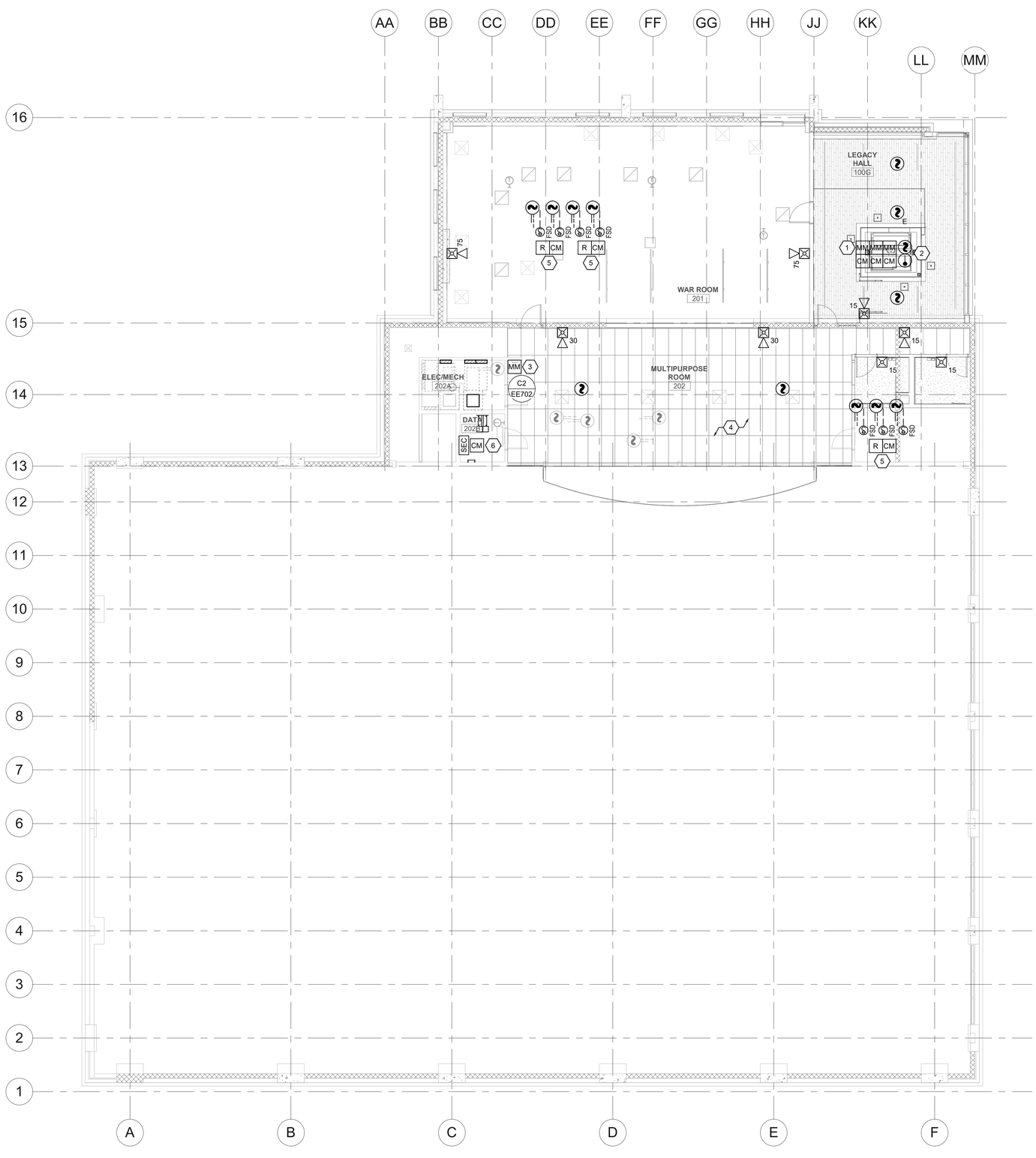

A1 LEVEL 2 FIRE ALARM PLAN
SCALE: 1/8" = 1'-0"

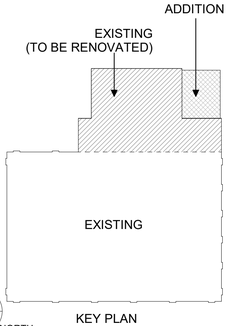

0 4' 8' 16'

GENERAL SHEET NOTES

1 FIRE ALARM NOTIFICATION DEVICES SHALL BE ADJUSTED AS REQUIRED TO PROVIDE PROPER COVERAGE AND SOUND LEVELS.

2 ALL FIRE ALARM DEVICES SHALL BE MOUNTED SUCH THAT THEY ARE VISIBLE FROM THE GROUND AND EASILY ACCESSIBLE FOR MAINTENANCE.

3 CONTROL MODULE AND RELAY TIED INTO BAS PANEL FOR INPUT TO FAN SHUTDOWN UPON ACTIVATION OF DUCT OR SMOKE DETECTORS. COORDINATE RELAY SIZE AND VOLTAGE WITH EQUIPMENT.

4 PROVIDE POTTER SASH-24 WEATHERPROOF EXTERIOR HORN/STROBE OR EQUAL AT FIRE DEPARTMENT CONNECTION LOCATION. DEVICE SHALL BE 24VDC POWERED BY FACP AND DIRECTLY WIRED THROUGH FLOW SWITCH SUCH THAT THE DEVICE WILL OPERATE UPON WATER FLOW AND SILENCE ONLY UPON CESSATION OF WATER FLOW. COORDINATE AND ADJUST LOCATION TO WITHIN 5 FEET OF FIRE DEPARTMENT CONNECTION LOCATION.

5 TYPICAL: CORRIDOR SMOKE DETECTOR SPACING SHALL NOT EXCEED 30FT ON CENTER.

6 ALL EXPOSED RACEWAYS LOCATED IN LABS SHALL BE ROUTED HORIZONTALLY 8FT OR HIGHER UNLESS NOTED OTHERWISE.

SHEET KEYNOTES

1 FIRE ALARM CONTROL MODULES FOR ELEVATOR SHUTDOWN, RECALL ALTERNATE RECALL, FIREMAN CONTROL. FIRE ALARM MONITOR MODULES TO MONITOR POWER TO THE SHUNT TRIP DISCONNECT COIL.

2 LOCATE DETECTION WITHIN 24" OF SPRINKLER HEAD.

3 PROVIDE EN GAUGE EVM MODULE FOR FIRE EXTINGUISHER TIED TO FIRE ALARM SYSTEM.

4 ALL EXISTING FIRE ALARM DEVICE CIRCUITS THAT ARE TO REMAIN SHALL BE INTERCEPTED AND EXTENDED TO TO FIRE ALARM CONTROL PANEL.

5 INSTALL INDICATED DUCT DETECTOR WITHIN 5FT OF FIRE/SMOKE DAMPER OR RETURN AIR SHAFT OPENING AT APPROXIMATE LOCATION INDICATED PER NFPA 72 REQUIREMENTS. COORDINATE INSTALLATION WITH ACTUAL DUCTWORK CONFIGURATION DURING CONSTRUCTION.

6 PROVIDE CONTROL MODULE FOR SECURITY SYSTEM INTERFACING WITH FIRE ALARM SYSTEM.

ARCHITECT 1877
ajc architects
703 east 1700 south
salt lake city, utah 84105
ph: 801.466.8818
fx: 801.466.4411
www.ajcarchitects.com
LICENSED PROFESSIONAL ENGINEER No. 5497590-2202 Christopher Kirk Skousen STATE OF UTAH
10.01.21

CONSULTANT
SPECTRUM ENGINEERS
324 S. State St., Suite 400
Salt Lake City, UT 84111
800-678-7077
801-328-5151
fax: 801-328-5155
www.spectrum-engineers.com

OWNER INFORMATION

PROJECT DESCRIPTION

DUMKE GYMNASTICS TRAINING CENTER:

1825 E. SOUTH CAMPUS DRIVE
SALT LAKE CITY, UT 84112

AHJ STAMP

SHEET NAME:
LEVEL 2 FIRE ALARM PLAN

REVISIONS

MARK	DATE	DESCRIPTION

ISSUE DATA

ISSUE DATE:	10.01.21
ISSUE TYPE:	CD
DRAWN BY:	IBC
CHECKED BY:	LSK
PROJECT#:	1877

SHEET NUMBER:
FA102

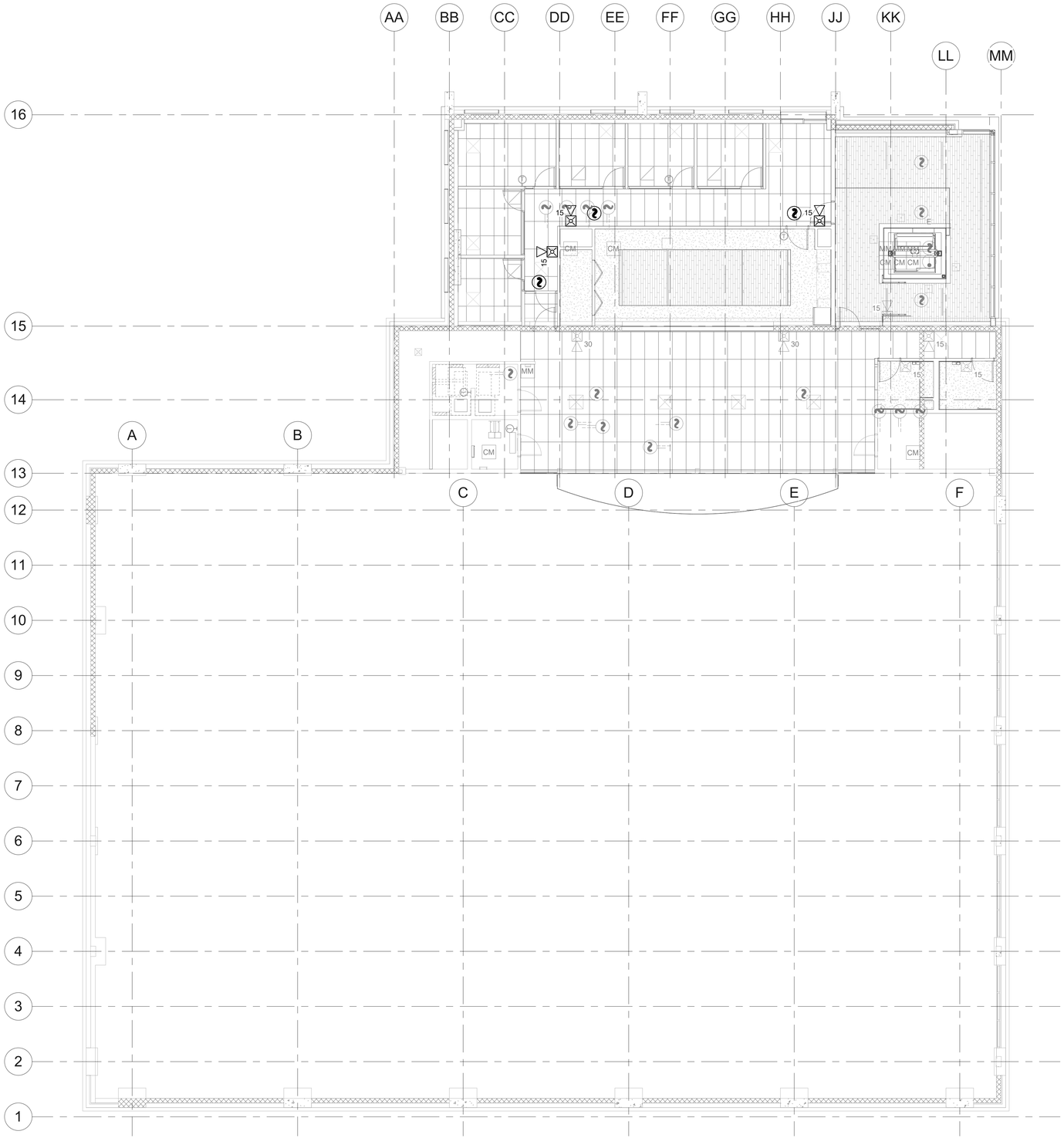

A1 LEVEL 2 FIRE ALARM PLAN ADD ALTERNATE #1

SCALE: 1/8" = 1'-0"

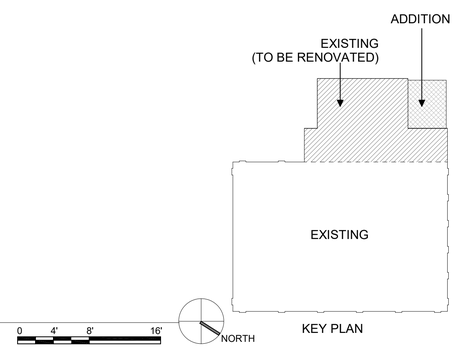

KEY PLAN

0 4' 8' 16'

GENERAL SHEET NOTES

1 FIRE ALARM NOTIFICATION DEVICES SHALL BE ADJUSTED AS REQUIRED TO PROVIDE PROPER COVERAGE AND SOUND LEVELS.

2 ALL FIRE ALARM DEVICES SHALL BE MOUNTED SUCH THAT THEY ARE VISIBLE FROM THE GROUND AND EASILY ACCESSIBLE FOR MAINTENANCE.

3 CONTROL MODULE AND RELAY TIED INTO BAS PANEL FOR INPUT TO FAN SHUTDOWN UPON ACTIVATION OF DUCT OR SMOKE DETECTORS. COORDINATE RELAY SIZE AND VOLTAGE WITH EQUIPMENT.

4 PROVIDE POTTER SASH-24 WEATHERPROOF EXTERIOR HORN/STROBE OR EQUAL AT FIRE DEPARTMENT CONNECTION LOCATION. DEVICE SHALL BE 24VDC POWERED BY FACP AND DIRECTLY WIRED THROUGH FLOW SWITCH SUCH THAT THE DEVICE WILL OPERATE UPON WATER FLOW AND SILENCE ONLY UPON CESSATION OF WATER FLOW. COORDINATE AND ADJUST LOCATION TO WITHIN 5 FEET OF FIRE DEPARTMENT CONNECTION LOCATION.

5 TYPICAL: CORRIDOR SMOKE DETECTOR SPACING SHALL NOT EXCEED 30FT ON CENTER.

6 ALL EXPOSED RACEWAYS LOCATED IN LABS SHALL BE ROUTED HORIZONTALLY 8FT OR HIGHER UNLESS NOTED OTHERWISE.

ARCHITECT 1877

ajc architects

703 east 1700 south
salt lake city, utah 84105
ph: 801.466.8818
fx: 801.466.4411
www.ajcarchitects.com

LICENSED PROFESSIONAL ENGINEER No. 5497590-2202 Christopher Kelly Kohajoshi STATE OF UTAH

10.01.21

CONSULTANT

SPECTRUM ENGINEERS

324 S. State St., Suite 400
Salt Lake City, UT 84111
800-678-7077
801-328-5151
fax: 801-328-5155
www.spectrum-engineers.com

OWNER INFORMATION

PROJECT DESCRIPTION

DUMKE GYMNASTICS TRAINING CENTER:

1825 E. SOUTH CAMPUS DRIVE
SALT LAKE CITY, UT 84112

AHJ STAMP

SHEET NAME:

LEVEL 2 FIRE ALARM PLAN ADD ALTERNATE #1

REVISIONS

MARK	DATE	DESCRIPTION

ISSUE DATA

ISSUE DATE:	10.01.21
ISSUE TYPE:	CD
DRAWN BY:	IBC
CHECKED BY:	LSK
PROJECT#:	1877

SHEET NUMBER:

FA102.1

10/3/2021 1:31:55 PM C:\Users\ibc\Desktop\Revit Local Files\2020\20191093 ELEC Central_IBC-Spectrum.rvt

ALL IDEAS, DESIGNS, ARRANGEMENTS AND PLANS INDICATED OR REPRESENTED BY THIS DRAWING ARE OWNED BY AND THE PROPERTY OF AJC ARCHITECTS PC AND WERE CREATED, EVOLVED, AND DEVELOPED FOR USE ON AND IN CONNECTION WITH THE SPECIFIED PROJECT. NONE OF THE IDEAS, DESIGNS, ARRANGEMENTS OR PLANS SHALL BE USED BY OR DISCLOSED TO ANY PERSON, FIRM, OR CORPORATION FOR ANY PURPOSE WHATSOEVER WITHOUT WRITTEN CONSENT OF AJC ARCHITECTS PC. WRITTEN DIMENSIONS ON THESE DRAWINGS SHALL HAVE PRECEDENCE OVER SCALE DIMENSIONS. CONTRACTORS SHALL VERIFY AND BE RESPONSIBLE FOR ALL DIMENSIONS AND CONDITIONS ON THE JOB AND THIS OFFICE MUST BE NOTIFIED OF ANY VARIATION FROM THE DIMENSIONS AND CONDITIONS SHOWN BY THESE DRAWINGS. WARNING: REPRODUCTION HEREOF IS A CRIMINAL OFFENSE UNDER 18 U.S.C. SEC. 506. UNAUTHORIZED DISCLOSURE MAY CONSTITUTE TRADE SECRET MISAPPROPRIATION IN VIOLATION OF 1C 24-2-31-1 ET. SEQ. AND OTHER LAWS.

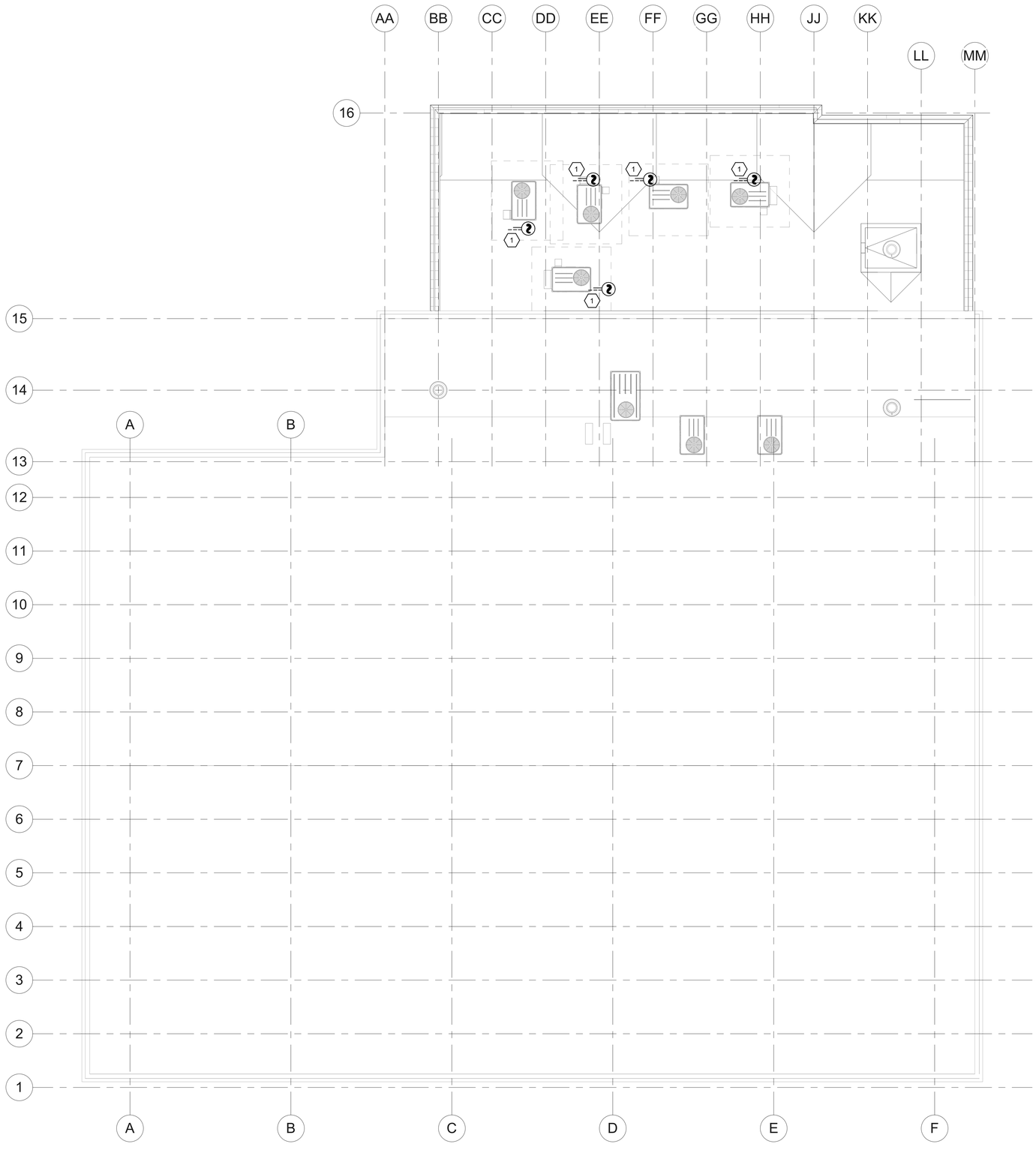

A1 ROOF FIRE ALARM PLAN
SCALE: 1/8" = 1'-0"

GENERAL SHEET NOTES

1 FIRE ALARM NOTIFICATION DEVICES SHALL BE ADJUSTED AS REQUIRED TO PROVIDE PROPER COVERAGE AND SOUND LEVELS.

2 ALL FIRE ALARM DEVICES SHALL BE MOUNTED SUCH THAT THEY ARE VISIBLE FROM THE GROUND AND EASILY ACCESSIBLE FOR MAINTENANCE.

3 CONTROL MODULE AND RELAY TIED INTO BAS PANEL FOR INPUT TO FAN SHUTDOWN UPON ACTIVATION OF DUCT OR SMOKE DETECTORS. COORDINATE RELAY SIZE AND VOLTAGE WITH EQUIPMENT.

4 PROVIDE POTTER SASH-24 WEATHERPROOF EXTERIOR HORN/STROBE OR EQUAL AT FIRE DEPARTMENT CONNECTION LOCATION. DEVICE SHALL BE 24VDC POWERED BY FACP AND DIRECTLY WIRED THROUGH FLOW SWITCH SUCH THAT THE DEVICE WILL OPERATE UPON WATER FLOW AND SILENCE ONLY UPON CESSATION OF WATER FLOW. COORDINATE AND ADJUST LOCATION TO WITHIN 5 FEET OF FIRE DEPARTMENT CONNECTION LOCATION.

5 TYPICAL: CORRIDOR SMOKE DETECTOR SPACING SHALL NOT EXCEED 30FT ON CENTER.

6 ALL EXPOSED RACEWAYS LOCATED IN LABS SHALL BE ROUTED HORIZONTALLY 8FT OR HIGHER UNLESS NOTED OTHERWISE.

SHEET KEYNOTES

1 DUCT DETECTOR IN RETURN/SUPPLY AIR RISER, INSTALL IN STRAIGHT SECTION OF DUCT AS PER NFPA 72 REQUIREMENTS.

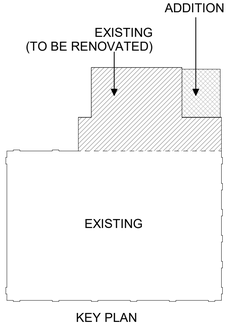

KEY PLAN

0 4' 8' 16'
NORTH

ARCHITECT 1877

ajc architects
703 east 1700 south
salt lake city, utah 84105
ph: 801.466.8818
fx: 801.466.4411
www.ajcarchitects.com

LICENSED PROFESSIONAL ENGINEER
No. 5497590-2202
Christopher Kelly Kobayashi
STATE OF UTAH

10.01.21

CONSULTANT

SPECTRUM ENGINEERS
324 S. State St., Suite 400
Salt Lake City, UT 84111
800-678-7077
801-328-5151
fax: 801-328-5155
www.spectrum-engineers.com

OWNER INFORMATION

PROJECT DESCRIPTION

DUMKE GYMNASTICS TRAINING CENTER:

1825 E. SOUTH CAMPUS DRIVE
SALT LAKE CITY, UT 84112

AHJ STAMP

SHEET NAME:

ROOF FIRE ALARM PLAN

REVISIONS

MARK	DATE	DESCRIPTION

ISSUE DATA

ISSUE DATE: 10.01.21
ISSUE TYPE: CD
DRAWN BY: IBC
CHECKED BY: LSK
PROJECT#: 1877

SHEET NUMBER:

FA103

10/3/2021 1:31:51 PM C:\Users\ibc\Desktop\Revit Local Files\2020\20191093 ELEC Central_IBC-Spectrum.rvt
ALL IDEAS, DESIGNS, ARRANGEMENTS AND PLANS INDICATED OR REPRESENTED BY THIS DRAWING ARE OWNED BY AND THE PROPERTY OF AJC ARCHITECTS PC AND WERE CREATED, EVOLVED, AND DEVELOPED FOR USE ON AND IN CONNECTION WITH THE SPECIFIED PROJECT. NONE OF THE IDEAS, DESIGNS, ARRANGEMENTS OR PLANS SHALL BE USED BY OR DISCLOSED TO ANY PERSON, FIRM, OR CORPORATION FOR ANY PURPOSE WHATSOEVER WITHOUT WRITTEN CONSENT OF AJC ARCHITECTS PC. WRITTEN DIMENSIONS ON THESE DRAWINGS SHALL HAVE PRECEDENCE OVER SCALE DIMENSIONS. CONTRACTORS SHALL VERIFY AND BE RESPONSIBLE FOR ALL DIMENSIONS AND CONDITIONS ON THE JOB AND THIS OFFICE MUST BE NOTIFIED OF ANY VARIATION FROM THE DIMENSIONS AND CONDITIONS SHOWN BY THESE DRAWINGS. WARNING: REPRODUCTION HEREOF IS A CRIMINAL OFFENSE UNDER 18 U.S.C. SEC. 506. UNAUTHORIZED DISCLOSURE MAY CONSTITUTE TRADE SECRET MISAPPROPRIATION IN VIOLATION OF I.C.24-2-31-1 ET. SEQ. AND OTHER LAWS.

10/3/2021 1:31:48 PM C:\Users\ibc\Desktop\Revit Local Files\2020\20191093 ELEC Central_IBC-Spectrum.rvt

ALL IDEAS, DESIGNS, ARRANGEMENTS AND PLANS INDICATED OR REPRESENTED BY THIS DRAWING ARE OWNED BY AND THE PROPERTY OF AJC ARCHITECTS PC AND WERE CREATED, EVOLVED AND DEVELOPED FOR USE ON AND IN CONNECTION WITH THE SPECIFIED PROJECT. NONE OF THE IDEAS, DESIGNS, ARRANGEMENTS OR PLANS SHALL BE USED BY OR DISCLOSED TO ANY PERSON, FIRM OR CORPORATION FOR ANY PURPOSE WHATSOEVER WITHOUT WRITTEN CONSENT OF AJC ARCHITECTS PC. WRITTEN DIMENSIONS ON THESE DRAWINGS SHALL HAVE PRECEDENCE OVER SCALE DIMENSIONS. CONTRACTORS SHALL VERIFY AND BE RESPONSIBLE FOR ALL DIMENSIONS AND CONDITIONS ON THE JOB AND THIS OFFICE MUST BE NOTIFIED OF ANY VARIATION FROM THE DIMENSIONS AND CONDITIONS SHOWN BY THESE DRAWINGS. WARNING: REPRODUCTION HEREOF IS A CRIMINAL OFFENCE UNDER 18 U.S.C. SEC. 506. UNAUTHORIZED DISCLOSURE MAY CONSTITUTE TRADE SECRET MISAPPROPRIATION IN VIOLATION OF 17.24.2-311 ET. SEQ. AND OTHER LAWS.

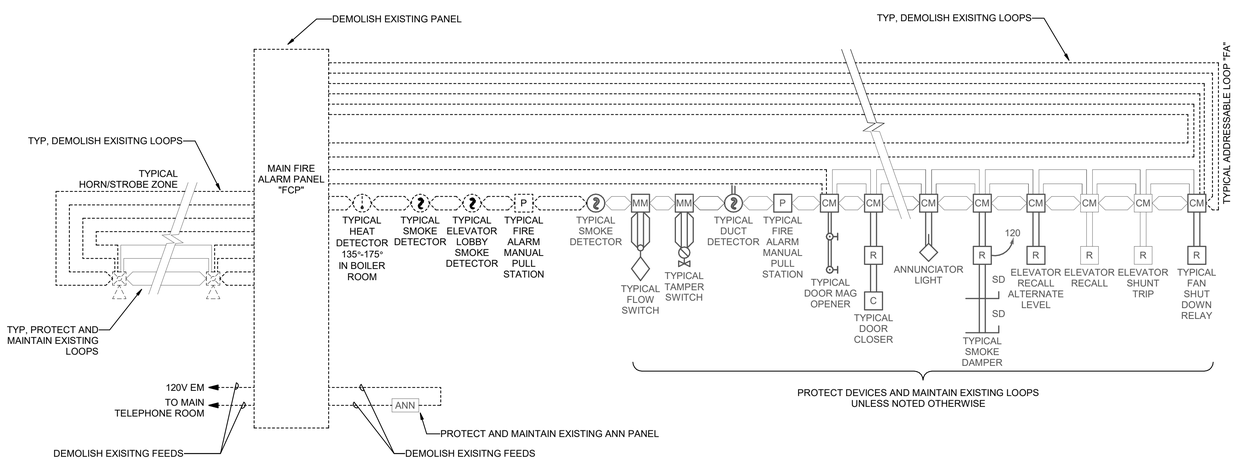

LEVEL 1

C1 FIRE ALARM RISER - DEMO

SCALE: NTS

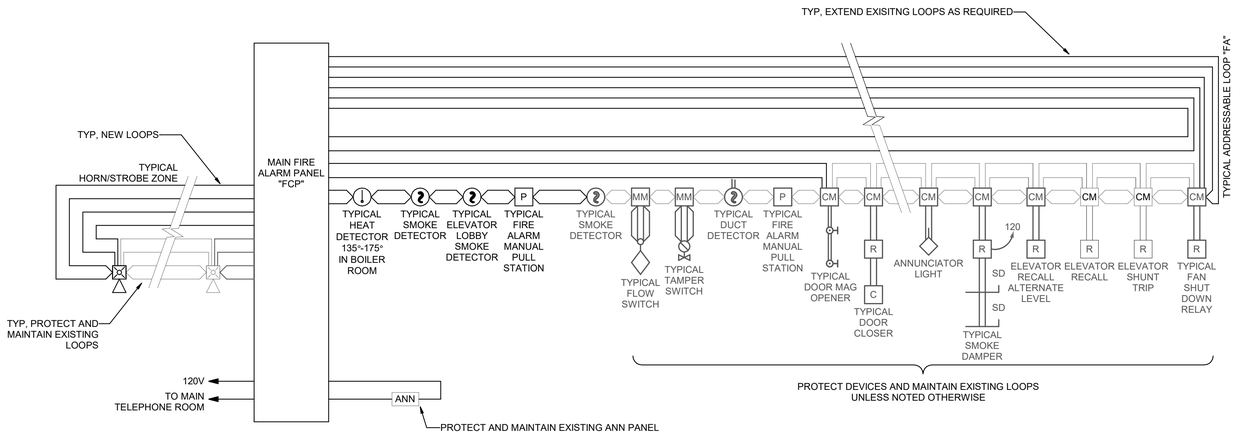

LEVEL 1

A1 FIRE ALARM RISER - NEW

SCALE: NTS

GENERAL SHEET NOTES

1 PLANS ARE BASED UPON 99 MONITOR AND CONTROL DEVICES PER ADDRESSABLE LOOP. OTHER CONFIGURATIONS ARE ACCEPTABLE SUBJECT TO CONTRACTOR ALLOWING FOR INCREASED WIRING REQUIREMENTS AND SUBMITTAL DRAWINGS SHOWING NEW WIRING CONFIGURATION. MAXIMUM INITIAL DEVICES PER LOOP SHALL NOT EXCEED 75% MAXIMUM ALLOWABLE.

2 PLANS ARE BASED UPON THE WIRING SCHEDULE SHOWN. WHERE MANUFACTURER'S REQUIREMENTS EXCEED REQUIREMENTS SHOWN, INCLUDE ADDITIONAL ASSOCIATED COSTS AND SUBMITTAL DRAWINGS INDICATING NEW WIRING CONFIGURATION.

3 PLANS ARE BASED UPON 2 AMPS AT 24 VDC, NOT TO EXCEED 75% (1.50 AMPS AVAILABLE), POWER SUPPLY CAPACITY PER NOTIFICATION CIRCUIT. NOTIFICATION DEVICE LOADS ARE BASED UPON NOTIFICATION DEVICE SCHEDULE SHOWN. INCLUDE ADDITIONAL ASSOCIATED COSTS FOR INCREASED WIRING AND POWER SUPPLY CAPACITY IF LOADS OF ACTUAL DEVICES PROVIDED EXCEED CIRCUIT CAPACITY, OR IF LOAD OUTPUT OF ACTUAL POWER SUPPLIES PROVIDED IS SIZED DIFFERENTLY. PROVIDE SUBMITTAL DRAWINGS SHOWING NEW WIRING CONFIGURATION.

4 FLOW AND TAMPER CONFIGURATION BASED UPON FIRE SPRINKLER DESIGN CONCEPT. FIELD VERIFY ACTUAL REQUIREMENTS. INCLUDE ANY ADDITIONAL MONITOR MODULES REQUIRED BY ACTUAL DESIGN REQUIREMENTS.

5 HEAT DETECTORS WHEN INSTALLED IN ELEVATOR SHAFTS OR MECHANICAL ROOMS FOR ELEVATOR SHUT DOWN SHALL HAVE HEAT DETECTOR WITH LOWER RESPONSE TIME INDEX THAN SPRINKLER HEAD.

6 PROVIDE POWER SUPPLY CAPACITY AS REQUIRED FOR DOOR HOLD OPENS SHOWN.

7 BATTERY CAPACITY TO BE ADEQUATE TO OPERATE 15 MINUTES AFTER 24 HOURS PLUS 25% SPARE CAPACITY.

8 VFD REQUIRES TWO RELAYS, ONE FOR SMOKE CONTROL, ONE SPARE.

9 RUN SPARE LOOPS IN SAME CONDUIT. DO NOT EXCEED 40% AREA FILL OF CONDUITS.

10 PROVIDE DUCT DETECTORS FOR SUPPLY AND RETURN AIR SYSTEMS OVER 2000 CFM. INSTALL DUCT DETECTORS PER NFPA 72 REQUIREMENTS AND PROVIDE ADDITIONAL DUCT DETECTORS DEPENDING UPON FINAL DUCT ARRANGEMENT.

11 PROVIDE DUCT DETECTOR AT EACH FLOOR, PRIOR TO CONNECTION TO A COMMON RETURN AND PRIOR TO RECIRCULATING OR FRESH AIR INLET IN AIR RETURN SYSTEMS OVER 15,000 CFM CAPACITY AND SERVING MORE THAN ONE STORY.

12 PROVIDE MANUAL PULL STATIONS IN BOILER ROOMS AND KITCHENS.

13 PROVIDE ONE YEAR OFF SITE MONITORING INCLUDING ALL INTERFACE DEVICES AND MONITORING CHARGES. COORDINATE WITH BUILDING OWNER'S OFF SITE MONITORING COMPANY.

14 LOCATE SMOKE DETECTORS MINIMUM 3' FROM AIR SUPPLY AND RETURN LOUVERS.

15 PROVIDE SYNCHRONIZED STROBES THROUGHOUT FACILITY. PROVIDE SYNCHRONIZATION MODULES PER MANUFACTURER'S REQUIREMENTS. INCLUDE ADDITIONAL WIRING, IF REQUIRED.

16 INITIATING AND INDICATING LOOPS SHALL NOT SERVE AN AREA OF GREATER THAN 22,500 SQUARE FEET. PROVIDE ADDITIONAL LOOPS FOR AREAS LARGER THAN THIS.

17 ALL OUTPUT DEVICES ARE DESIGNED ON SYSTEMS WITH 2 AMP POWER SUPPLY.

18 HORN/STROBE BASED ON 120 MILLIAMPS, DOOR HOLDERS BASED ON 70 MILLIAMPS.

19 INSTALL DUCT DETECTORS PER NFPA 72 REQUIREMENTS AND PROVIDE ADDITIONAL DUCT DETECTORS DEPENDING UPON FINAL DUCT ARRANGEMENT.

ARCHITECT 1877

ajc architects

703 east 1700 south
salt lake city, utah 84105
ph: 801.466.8818
fx: 801.466.4411
www.ajcarchitects.com

LICENSED PROFESSIONAL ENGINEER
No. 5497590-2202
Christopher Mark Kirkham
STATE OF UTAH

10.01.21

CONSULTANT

SPECTRUM ENGINEERS
324 S. State St., Suite 400
Salt Lake City, UT 84111
800-678-7077
801-328-5151
fax: 801-328-5155
www.spectrum-engineers.com

OWNER INFORMATION

PROJECT DESCRIPTION

DUMKE GYMNASTICS TRAINING CENTER:

1825 E. SOUTH CAMPUS DRIVE
SALT LAKE CITY, UT 84112

AHJ STAMP

SHEET NAME:
FIRE ALARM RISER

REVISIONS

MARK	DATE	DESCRIPTION

ISSUE DATA

ISSUE DATE:	10.01.21
ISSUE TYPE:	CD
DRAWN BY:	IBC
CHECKED BY:	LSK
PROJECT#:	1877

SHEET NUMBER:

FA601