U OF U BLDG. 303 SEISMIC UPGRADE, PROJ. #22508 - PHASE 4 VE

FFKR ARCHITECTS

CONSTRUCTION SET
10-10-2022



ABBREVIATIONS

AFF	ABOVE FINISH FLOOR
CMU	CONCRETE MASONRY UNIT
EIFS	EXTERIOR INSULATED FINISH
EQ	EQUAL
MAX	MAXIMUM
MIN	MINIMUM
NIC	NOT IN CONTRACT
O.C.	ON CENTER
SPEC	SPECIFICATION
SIM	SIMILIAR
TYP	TYPICAL
T.O.	TOP OF
B.O.	BOTTOM OF

MATERIAL LEGEND

- GYPSUM BOARD OR CONCRETE SURFACE
- CONCRETE
- STUD WALL
- GRAVEL
- COMPACTED FILL AND/OR EARTH
- CMU (CONCRETE MASONRY UNIT)
- BATT INSULATION
- RIGID INSULATION

SYMBOLS LEGEND

ROOM IDENTIFICATION NUMBER — ROOM NAME / NUM — ROOM NAME, ROOM NUMBER

DOOR NUMBER — XXX

REFERENCE NOTE — XX.XX

GLAZING TYPE — X

PARTITON WALL TYPE — XX

INTERIOR ELEVATION — A1 (SHADE INDICATES ELEVATED WALL), A4, A2 (ELEVATION NUMBER), A3 (SHEET NUMBER)

BUILDING SECTION — SECTION NUMBER, SHEET NUMBER

WALL SECTION — SECTION NUMBER, SHEET NUMBER

EXTERIOR ELEVATION — ELEVATION NUMBER, SHEET NUMBER

DETAIL — DETAIL NUMBER, SHEET NUMBER

DETAIL TITLE — A1 DETAIL, SCALE:

REVISION DELTA — 2, REVISION NUMBER

SITE MAP

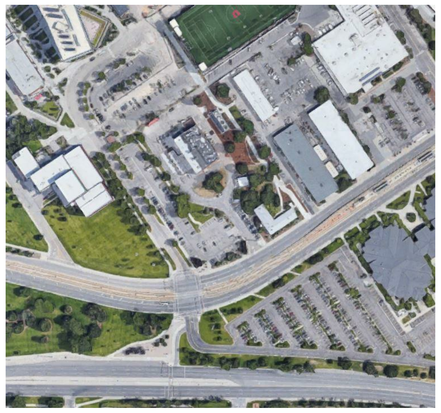

VICINITY MAP



PROJECT TEAM

PROJECT ARCHITECT
FFKR ARCHITECTS
730 PACIFIC AVE
SALT LAKE CITY, UTAH 84104
801-521-6186

CIVIL ENGINEER
TALISMAN CIVIL CONSULTANTS
5217 S. STATE ST.
MURRAY, UT 84107
(801) 743-1308

STRUCTURAL ENGINEER
ARW ENGINEERS
1594 PARK CIRCLE
OGDEN, UTAH 84404
(801) 782-6008

MECHANICAL ENGINEER
RMH ENGINEERS
12600 W. COLFAX AVE., STE A-400
LAKEWOOD, CO 80215
(303) 239-0909

ELECTRICAL ENGINEER
RMH ENGINEERS
12600 W. COLFAX AVE., STE A-400
LAKEWOOD, CO 80215
(303) 239-0909

GEOTECHNICAL ENGINEER
AGEC
600 WEST SANDY PARKWAY
SANDY, UTAH 84070
(801) 566-6399

DRAWING INDEX

SHEET NO.	SHEET NAME
GENERAL INFORMATION	
G-001-4	COVER SHEET
G-002-4	PHASING SCHEDULE
G-003-4	CODE REVIEW
G-004	PARKING PLAN
CIVIL DRAWINGS	
C001	GENERAL CIVIL NOTES
C101-4	DEMOLITION PLAN PHASE 4
C201-4	SITE HORIZONTAL CONTROL & UTILITY PLAN PHASE 4
C401-4	GRADING PLAN PHASE 4
C601-4	EROSION CONTROL PLAN PHASE 4
C700-4	CIVIL DETAILS PHASE 4
ARCHITECTURAL SITE DRAWINGS	
AS-101-4	OVERALL SITE PLAN PHASE 4
DEMO DRAWINGS	
AD-101-4	DEMO FLOOR & ROOF PLANS PHASE 4
AD-201-4	DEMO EXTERIOR ELEVATIONS PHASE 4
AD-301	DEMO WALL SECTIONS
AD-501	DEMO DETAILS
ARCHITECTURAL	
AE-101-4	OPERATING LEVEL FLOOR PLAN PHASE 4
AE-102-4	PIPING LEVEL FLOOR PLAN PHASE 4
AE-103-4	FAN LEVEL FLOOR PLAN PHASE 4
AE-104-4	ROOF PLAN PHASE 4
AE-111-4	OPERATING LEVEL RCP PHASE 4
AE-201-4	EXTERIOR ELEVATIONS PHASE 4
AE-301-4	BUILDING SECTIONS PHASE 4
AE-310	WALL SECTIONS
AE-311	WALL SECTIONS
AE-400-4	ENLARGED OFFICE BLDG. SLAB PLAN
AE-401-4	ENLARGED OFFICE BLDG. FLOOR PLAN
AE-402-4	ENLARGED OFFICE BLDG. ROOF PLAN
AE-403-4	ENLARGED OFFICE BLDG. RCP
AE-410	ENLARGED STAIRS PLANS AND SECTIONS
AE-501	PLAN DETAILS
AE-503	TYPICAL CEILING DETAILS
AE-505	ROOF DETAILS
AE-506	ROOF DETAILS
AE-600-4	FINISH SCHEDULE AND PLAN
AE-601	DOORS AND WINDOW SCHEDULE
AE-602	PARTITION TYPES & DETAILS
AE-603	ADA RESTROOM ACCESS & SIGNAGE DIAGRAMS
STRUCTURAL DRAWINGS	
SG-001	STRUCTURAL NOTES AND SCHEDULES
SG-002	SCHEDULES
SG-003	SCHEDULES
SG-004	SCHEDULES
SG-005	SCHEDULES
S-101-4	OPERATING FLOOR PLAN - PHASE 4
S-102-4	PIPING FLOOR PLAN - PHASE 4
S-103A-4	SUB-FAN FLOOR FRAMING PLAN - PHASE 4
S-103B-4	FAN FLOOR FRAMING PLAN - PHASE 4
S-104-4	ROOF FRAMING PLAN - PHASE 4
S-201-4	PHASE 4 DETAILS
S-202-4	PHASE 4 DETAILS
S-203-4	PHASE 4 DETAILS
S-204-4	PHAST 4 DETAILS - BID ALTERNATE
S-301-4	WALL ELEVATIONS
MECHANICAL DRAWINGS	
M-000-4	MECHANICAL LEGEND
M-001-4	EQUIPMENT SCHEDULES
MD-100-4	BASEMENT FLOOR - MECHANICAL DEMOLITION PLAN
MD-101-4	OPERATING FLOOR - MECHANICAL DEMOLITION PLAN
M-100-4	BASEMENT FLOOR - MECHANICAL PLAN
M-101-4	OPERATING FLOOR - MECHANICAL PLAN
M-102-4	PIPING FLOOR - MECHANICAL PLAN
M-201-4	OFFICE - MECHANICAL PLAN
M-202-4	OFFICE - MECHANICAL ROOF PLAN
M-601-4	MECHANICAL DETAILS
PLUMBING DRAWINGS	
P-201-4	OFFICE PLUMBING PLAN
P-601-4	PLUMBING ISOMETRIC DRAWINGS AND DETAILS
ELECTRICAL DRAWINGS	
E-000-4	ELECTRICAL LEGEND DIAGRAM
ED-201-4	OFFICE-ELECTRICAL PLAN DEMOLITION
E-100-4	BASEMENT FLOOR - POWER PLAN
E-102-4	PIPING FLOOR - POWER PLAN
E-201-4	OFFICE - ELECTRICAL PLAN & SPECIAL SYSTEMS
E-202-4	OFFICE - ELECTRICAL ROOF PLAN
E-203-4	BUTTRESS ELECTRICAL PLAN
E-500-4	ELECTRICAL ONE LINE DIAGRAM
E-501-4	ELECTRICAL ONE LINE DIAGRAM
E-502-4	ELECTRICAL SCHEDULES
E-600-4	ELECTRICAL DETAILS
EL-201-4	OFFICE-LIGHTING PLAN

U OF U BLDG. 303 SEISMIC UPGRADE
SALT LAKE CITY UTAH

PROJECT NUMBER: 18136

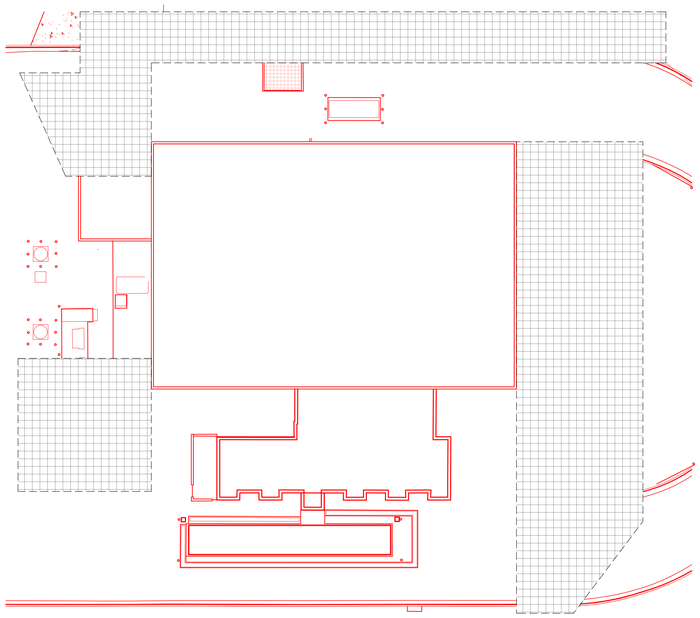

PHASE I

Demo: Existing curb, NW- Brine tank, electric, NE- Gas Line, chill water line, dumpster enclosure, MCC #5 (Gen 5/9 project)

New: Civil curb alignment, NW- Brine tank, electric, NE- Gas Line, chill water line; water lines cap off (inside the bldg)

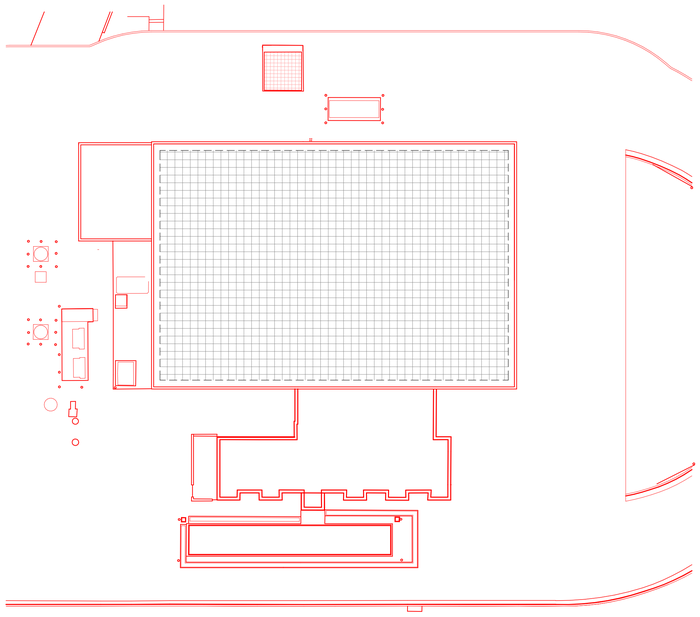

PHASE II

DEMO: ROOF SCREEN WALL, ROOF ASSEMBLY, REMOVE ROOF EXHAUST FANS, OIL COOLER, CONDENSATE TANK, HOPPERS. STAIRS BY GEN 4.

NEW: OIL COOLER, ROOF ASSEMBLY (CURB, ROOF DRAINS, PARAPET, ROOF BRACING, INT. DIAPHRAM, CONDENSATE TANK, INTERIOR DIAPHRAM, ROOF TOP EXHAUST FANS, WATER TANK FOR A RESEARCH PROJECT

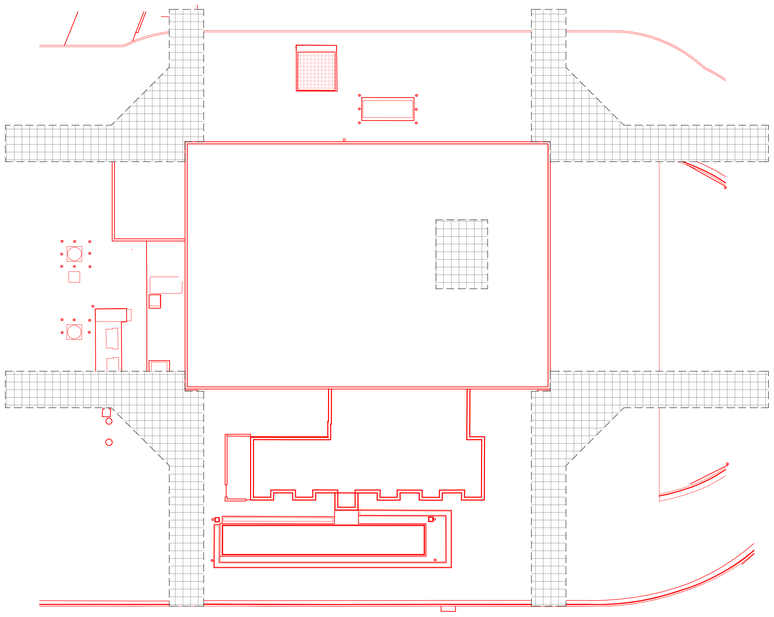

PHASE III

DEMO: ASPHALT REMOVAL AT 4 BUILDING CORNERS.

NEW: ALL 4 BUTTRESS FOUNDATIONS, MICRO PILE, UNDERPIN, CONCRETE CAP, STEEL BEAMS, COLUMNS, AND LINKS.

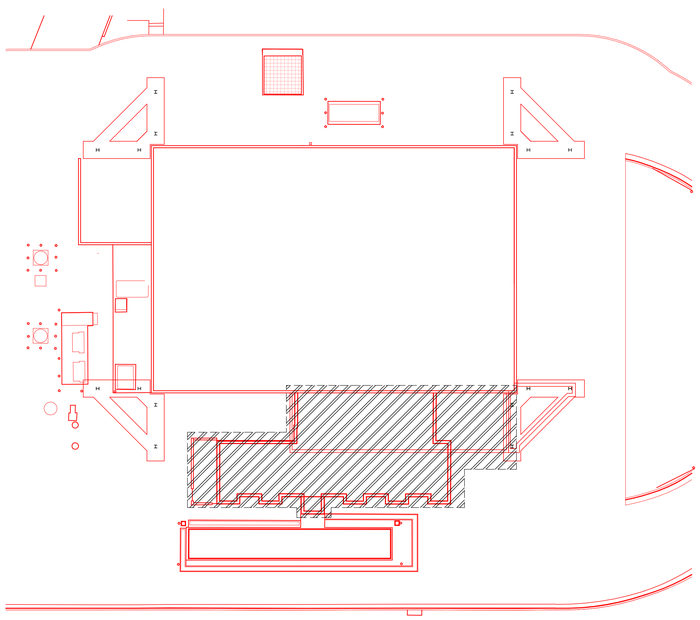

PHASE IV

DEMO: OFFICE BUILDING AND WEST BRICK WALL.

NEW: OFFICE BUILDING & PARTIAL FIRE RISER AND SPRINKLER
PLANT: WEST BUILDING ENVELOPE & EXO STEEL, FIRE SPRINKLER @ OFFICE ONLY

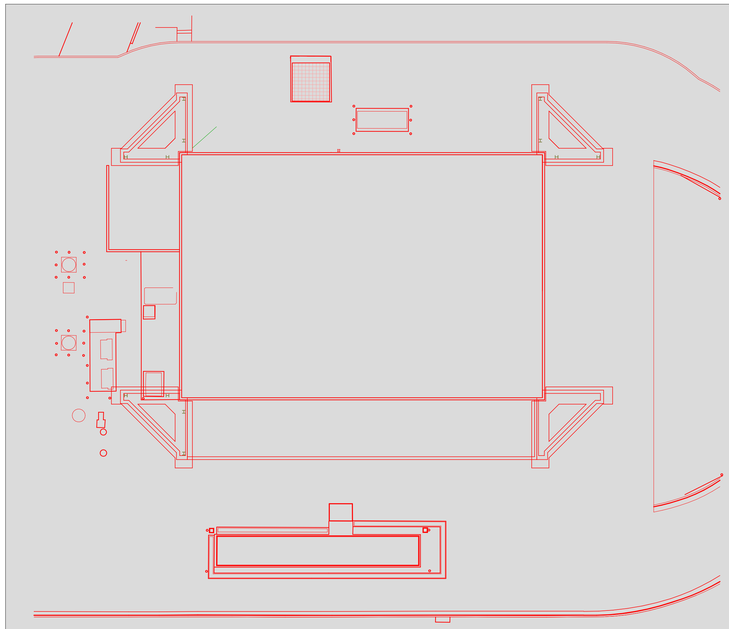

PHASE V

DEMO: EAST & SOUTH BRICK WALLS.

NEW: EAST & SOUTH BUILDING ENVELOPE & EXO STEEL.
NE, SE, NW BUTTRESS ENVELOPES.

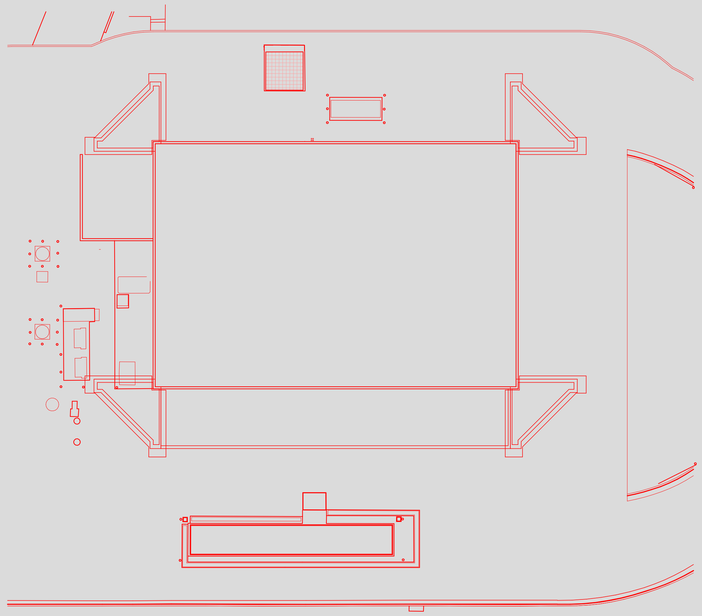

PHASE VI

DEMO: NORTH BRICK WALL

NEW: NORTH BUILDING ENVELOPE & EXO STEEL, EQUIP & PIPE BRACING & INSULATION, ASPHALT REPAIR & REPLACE, MAKE UP AIR UNIT ON ROOF (SUPPLY AND EXHAUST), PENTHOUSE AND STAIR FROM FAN LEVEL TO ROOF, DUMPSTER ENCLOSURE.

PHASING LEGEND

- CURRENT PHASE, AREA OF WORK
- FUTURE PHASE
- PAST PHASE

A1 PHASING PLAN - PHASE 4

SCALE: 3/64" = 1'-0"

10/10/2022 2:02:33 PM

FFKR ARCHITECTS
730 Pacific Avenue · Salt Lake City, Utah 84104
O 801.521.6186 · FFKR.COM

U OF U BLDG. 303 SEISMIC UPGRADE PROJECT #22508 - PHASE 4 VE

SALT LAKE CITY UTAH

CONSTRUCTION SET - 10-10-2022

STATE OF UTAH
JACKSON FERGUSON, AIA
#5340047-0301
LICENSED ARCHITECT
10.10.22

△	DATE	REVISION
6	3-30-22	Phase 4 RC #1

PROJECT NUMBER 18136

PHASING SCHEDULE

G-002-4

THE UNIVERSITY OF UTAH

CODE ANALYSIS FORM – 2018 INTERNATIONAL BUILDING CODE

BUILDING IDENTIFICATION:	U303 –High Temperature Water Plant
	1705 E. South Campus Dr.
	SLC UT 84112

CODE ANALYSIS COMPLETION DATE:	3/30/2022

PART 1

APPLICABLE CODE	YEAR	APPLICABLE CODE	YEAR
International Building Code (IBC)	2018	ADA (ADAAG)	2010
International Existing Building Code	2018	ICC/ANSI A117.1	2017
International Fire Code (IFC)	2018	NFPA 101 Life Safety Code (State)	2018
International Mechanical Code (IMC)	2018	NFPA 101 Life Safety Code (Federal)	2015
International Energy Conservation Code (IECC)	2018	NFPA 99 Health Care Facilities Code	2018
International Plumbing Code (IBC)	2018	FGI Health Care Guidelines	2018
National Electric Code	2020		

PART 2

Occupancy Group (Chapter 3)			(T601) Const. Type (*1)	Area (506)*5				Height (T504.3) *6		Stories (T504.4) *6		(508) Mixed Use Type (*3)	(508.4.2) *4 Area Ratio
Floor	Name	Group		Tabular NS (T506.2)	Tabular SM or S1 (T506.2)	Aa (*2)	Actual ft²	Tabular T504.3 ft	Actual ft	Tabular (T504.4)	Actual		
Basement - Floor Total:													
1st - Floor Total:													
	Office	B	IIB		92,000	95,910	1,570	75	17	4	1		
2nd Floor Total:													
3rd Floor Total:													
Building Total (*2)							1,570						

*(*1) Construction Type shall be the most restrictive occupancy requirement for the entire building (508.3 & 508.4)*
*(*2) Area- Total building Area dependent on Single or Mixed Occupancy Building (506.2.1 through 506.2.4) & Frontage Increase (506.3)*
*(*3) Mixed Use - IAO=Incidental Accessory Occupancy / AO=Accessory Occupancy / SO=Separated Occupancies / NSO=Nonseparated Occupancies; gsf= gross square feet; nsf= net square feet; (E) = Existing*
*(*4) IBC Section 508.4.2: In each story, the building area shall be such that the sum of the ratios of the actual building area of each separated occupancy divided by the allowable building area of each separated occupancy shall not exceed 1.*
*(*5) 506.2.4 Mixed-occupancy, multistory buildings more than 3 stories above grade plan: Total building area shall be such that the aggregate sum of the ratios of the actual area of each story divided by the allowable area of such stories shall not exceed three for NS and four for S.*
*(*6) IBC 504.2 Mixed occupancy: In a building containing mixed occupancies in accordance with Section 508, no individual occupancy shall exceed the height and number of story limits specified in this section for the applicable occupancies.*

PART 3 - ALLOWABLE AREA DETERMINATION (506.2.1 through 506.2.4 & 506.3)

FRONTAGE INCREASE: If = [F/P- 0.25]W/30 = (Provide Analysis)

SINGLE-OCCUPANCY, ONE STORY BUILDINGS (506.2.1):
Allowable Area: Aa = At + (NS × If) = (Provide Analysis)
Level X, X Occupancy: Aa = At + (NS × If) = SF

If = [F/P – 0.25] W/30
If = [121'/284' – 0.25] W/30
If = [0.42 – 0.25] 30/30
If = 0.17 x 1
If = 0.17

Aa = [At + (NS x If) Sa
Aa = [92,000 + (23,000 x 0.17) x 1
Aa = [92,000 + 3,910] x 1
Aa = 95,910

PART 4 - GRADE PLANE ELEVATION & HEIGHT & STORIES (504)

BUILDING WALL	AVERAGE ELEVATION	GRADE PLANE ELEVATION
NORTH	17'-0"	17'-0"
SOUTH	17'-0"	17'-0"
EAST	17'-0"	17'-0"
WEST	17'-0"	17'-0"
	TOTAL BUILDING G.P.E.	17'-0"

STORY	FINISHED FLOOR ELEVATION	STORY ABOVE G.P.E.	HEIGHT
BASEMENT	N/A		
1ST FLOOR	0'	1	17'
2ND FLOOR	N/A		
3RD FLOOR			
TOTAL BUILDING		1-STORIES	17'-0"

PART 5 - AUTOMATIC FIRE SPRINKLER (903 & T903.2.11.6)

ITEM	REFERENCE	COMMENTS
Required		

PART 6 - OCCUPANCY SEPARATIONS (T508.4)

OCCUPANCY/OCCUPANCY	RATING	IBC/UL DESIGN #
B	Not required	

PART 7 - OTHER BUILDING ELEMENTS (T601 and T602)

ELEMENT	MATERIAL	RATING	IBC/UL DESIGN #
Interior Bearing Wall		0	
Interior Non-Bearing Wall	Metal stud assembly	0	N/A
Structural Frame	Steel	0	N/A
Exterior Structural Frame	Steel	0	N/A
Shaft Enclosure [a,b]		N/A	N/A
Floor / Ceiling Assembly		N/A	N/A
Roof / Ceiling Assembly	Steel, metal decking, rigid insulation	0	N/A
Vertical Exit Enclosure [a,b]		N/A	N/A

a. Fire-resistance rating not less than the floor assembly penetrated (713.4) (1023.2).
b. 2 hours where connecting four stories or more and 1 hour where connecting less than four stories, including basements. (713.4) (1023.2).

PART 8 - EXTERIOR WALL & OPENING PROTECTION (T705.8)

WALL LOCATION	PROTECTED	UNPROTECTED	PARAPET REQ'D (705.11)
NORTH	N/A		
SOUTH	N/A		
EAST	N/A		
WEST	N/A		

PART 9 - EXIT REQUIREMENTS

FLOOR LEVEL	ROOM OCCUPANCY GROUPS	AREA	OCCUPANT LOAD FACTOR (T1004.5)	# OF OCCUPANTS (1004)	# OF EXITS (1006)	REQ'D EGRESS WIDTH (1005)	REQ'D STAIR WIDTH (1005.3)	REQ'D AISLE WIDTH (1016)	COMMON PATH OF TRAVEL DISTANCE (T1006.2.1) (Worst case)	TOTAL TRAVEL DISTANCE (1017) (Worst case)
Level A Total:										
Level 1 Total:										
	Business office	500	150	4	1					
	Assembly	150	15	10	1					
Level 2 Total:										
Level 3 Total:										
Building Total:		550		14	1	N/A	N/A	N/A	26'	98'

PART 10 - ADDITIONAL REQUIREMENTS

ACCESSIBLE MEANS OF EGRESS (1009):	
ACCESSIBLE ROUTE (1104 & INTERNATIONAL EXISTING BUILDING CODE):	Complied
SPECIAL OCCUPANCY REQUIREMENTS (CHAPTER 4):	Complied

PLUMBING FIXTURES (T 2902.1)

TOTAL NUMBER OF REQUIRED FIXTURES:

		WATER CLOSETS					LAVATORIES			DRINKING FOUNTAINS	
OCCUPANCY	OCC. LOAD	RATIO	MEN	Urinals	RATIO	WOMEN	RATIO	MEN	WOMEN	RATIO	TOTAL
A3		1 PER 125	0.0	0.0	1 PER 65	0.0	1 PER 200	0.0	0.0	1 PER 1000	0
B	22	1 PER 25 <50	0.2	0.2	1 PER 25 <50	0.4	1 PER 40 <80	0.3	0.3	1 PER 100	0.22
		1 PER 50 >50	0.0	0.0	1 PER 50 >50	0.0	1 PER 80 >80	0.0	0.0		
E		1 PER 50	0.0	0.0	1 PER 50	0.0	1 PER 100	0.0	0.0	1 PER 100	0
I2 - Hosp, Ambul		1 PER ROOM			1 PER ROOM		1 PER ROOM			1 PER 100	0
I2 - Staff		1 PER 25	0.0	0.0	1 PER 25	0.0	1 PER 35	0.0	0.0	1 PER 100	0
I2 - Visitors		1 PER 75	0.0	0.0	1 PER 75	0.0	1 PER 100	0.0	0.0	1 PER 500	0
S1, S2		1 PER 100	0.0	0.0	1 PER 100	0.0	1 PER 100	0.0	0.0	1 PER 1000	0
TOTAL REQUIRED			1	1		1		1	1		1
TOTAL PROVIDED			1	1		1		1	1		1

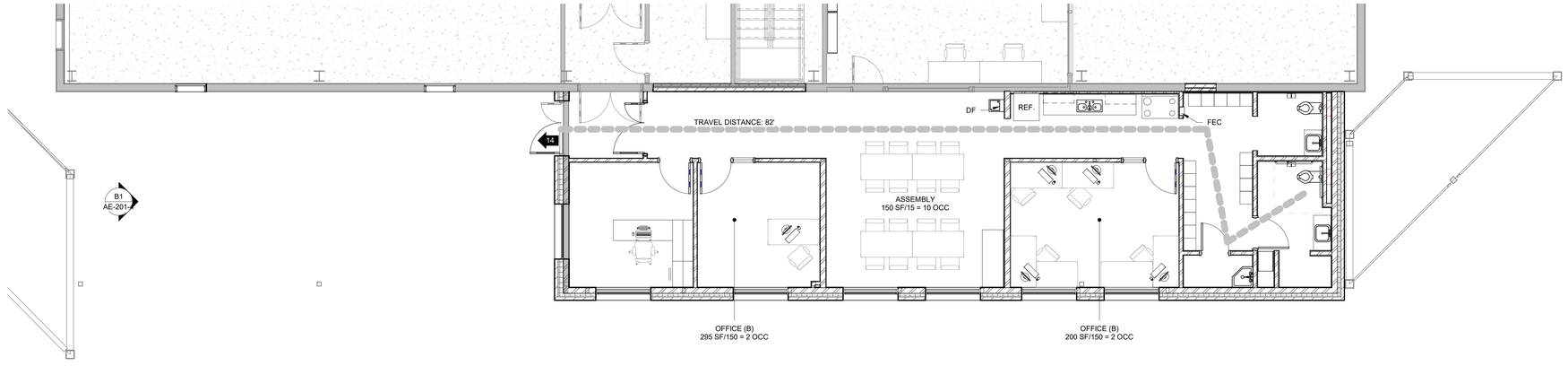

Note:
The means of egress, including the exit discharge, will be illuminated to a level of not less than one foot-candle at the walking surface at all times the building space served by the means of egress is occupied

A2 OPERATING LEVEL LIFE SAFETY PLAN
SCALE: 3/16" = 1'-0"

FFKR ARCHITECTS
730 Pacific Avenue · Salt Lake City, Utah 84104
O 801.521.6186 · FFKR.COM

U OF U BLDG. 303 SEISMIC UPGRADE PROJECT #22508 - PHASE 4 VE
SALT LAKE CITY UTAH
CONSTRUCTION SET - 10-10-2022

STATE OF UTAH · JACKSON FERGUSON, AIA · #534047-0301 · LICENSED ARCHITECT · 10.10.22

△	DATE	REVISION
6	3-30-22	Phase 4 RC #1
8	4-15-22	Phase 4 RC #2

PROJECT NUMBER 18136

CODE REVIEW

G-003-4

10/10/2022 2:02:34 PM

REFERENCE NOTES

THE UNIVERSITY OF UTAH

PROJECT PARKING PLAN WORKSHEET

The objective of a Project Parking Plan is to establish the parking impact during and after a construction Project. This Plan is to be done during the design process to provide direction in the contract documents that will inform the bidding and successful contractor what the project during construction. This plan is to be developed jointly by the Design Team, Project Manager, Project Planner, and Commuter Services. Once prepared, the Project Manager should submit it to Commuter Services for review and approval before including it in contract documents.

General Contractor - Reference this form to request permits electronically via our website @ commuterservices.utah.edu

PROJECT MANAGEMENT INFORMATION:

Project Name: HTW High temperature water plant seismic upgrade

Project Number: 22210 Project Client/User: FM

Project Manager & Phone: Stephen Laraway Project Planner:

Design Team: FFKRArchitects

Is there Abatement: ○ YES ◉ NO If yes, list firm:

PARKING IMPACT OF PROJECT:

Describe Project Limit Lines:

The staging area will be on the north side of building 303, and the parking area in the lot to the west of 303.

List all Parking lot #(s) being impacted by project scope N/A

Final Parking space changes as result of Project: Eliminated 0 Added 0 Net (add+/loss-) 0

CONSTRUCTION CONTRACTOR & SUBCONTRACTOR PARKING IMPACT: (Include information in contract documents)

Construction Start date: Aug 1st 2019 Duration: March 30 , (months)

Describe Construction Staging Area Limit Lines:

see attached map

Number of spaces (at contractor discretion) estimated available within the construction staging area 0

Number of Permits requested for purchase in campus lots per month (expand table as needed)

Permit type	Month:	1	2	3	4	5	6	7	8	9	10	11	12	13	14	15
CV	# of Permits >	11	11	11	11											
	# of Permits >															
	# of Permits >															

Permit types explained on following pages.

COMMUTER SERVICES REVIEW/APPROVAL:

Approved 7/3/19

Revision/notes:

Commuter Services
Parking • Shuttles • Transit
1901 E South Campus Drive Room 101
Salt Lake City, Utah 84112-9350

PERMIT DESCRIPTIONS

1. "CS" (staging) Permits –virtual permit
   a. Staging permit, available for FREE
   b. Location specific
      i. Location will be identified on permit
      ii. Vehicle must be parked in:
         1. Loading dock (include building number)
         2. Construction area designated with cones, fencing, bollards, etc...
         3. Sidewalk with cones, fencing, bollards, etc. without blocking pedestrian access
   c. Used only for construction vehicles, no personal/commuter cars
2. "Con" (regular) Permits – virtual permit
   a. Call (801)581-6415 for current pricing
   b. Available in monthly or daily terms
   c. Valid in A and U stalls
      i. Only valid in lots 32, 40, and/or 75
3. "CV" (vendor/maintenance) Permits –virtual permit
   a. Call (801)581-6415 for current pricing
   b. Available in monthly or daily terms
   c. Valid in A, U, E, Maintenance Stalls and Meters/Pay-by-phone without payment
      i. May not park in Load Zone meters
      ii. Campus wide excluding LDSI parking lots (15,17,18,19,21)

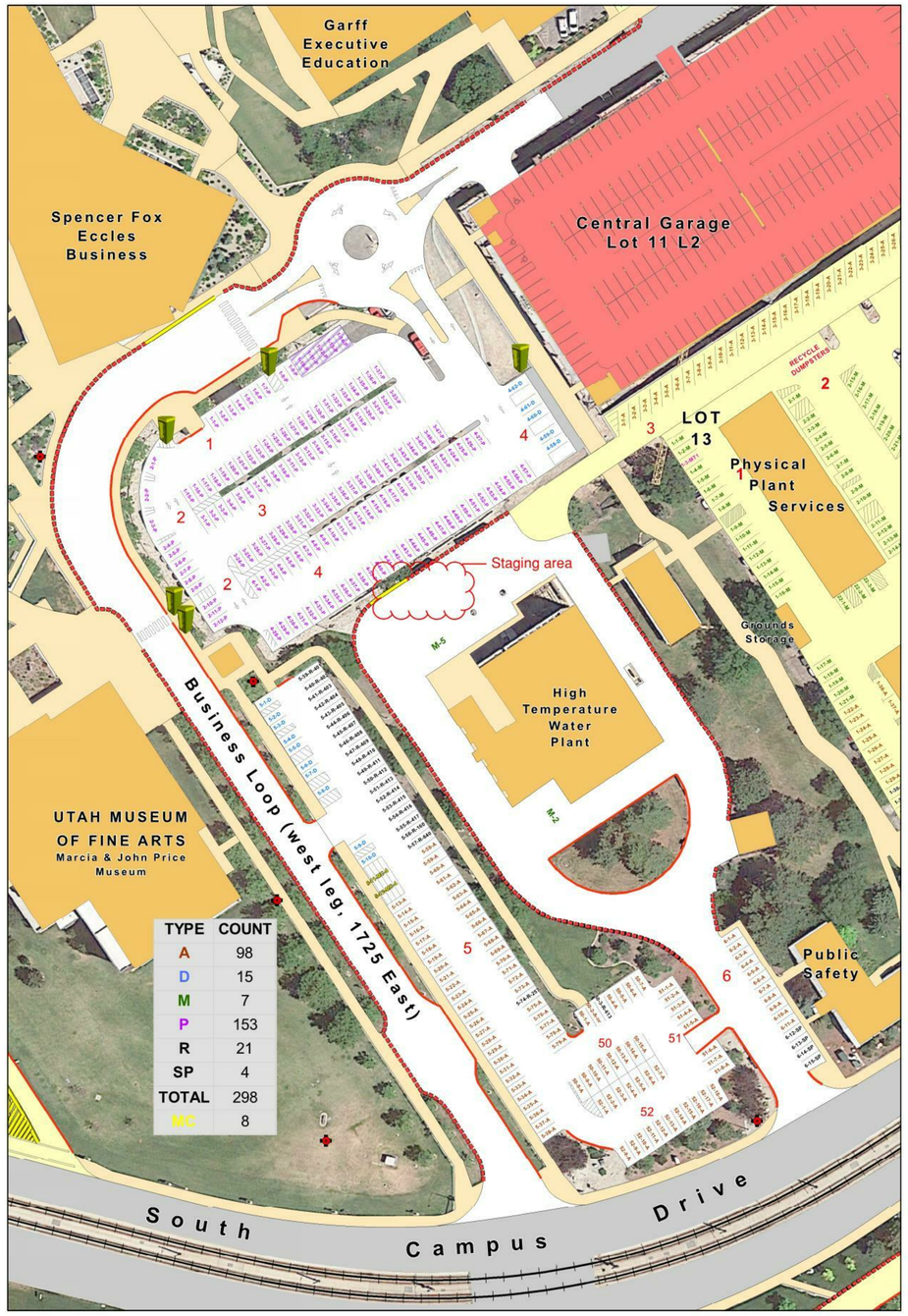

TYPE	COUNT
A	98
D	15
M	7
P	153
R	21
SP	4
TOTAL	298
MC	8

12 : April 29, 2019 map print date

Edit: 22aug18. non-MC Stalls: 298. 13 Count DECREASE Area: 16,634. Area DECREASE. Sq. METERS

Lot 12
BUSINESS

File: Z:\LOT MAPS PHOTOS\map_comps\lot12.mxd Scale 1:800
(C) Commuter Services UofU. User: u0103012

FFKR ARCHITECTS
730 Pacific Avenue · Salt Lake City, Utah 84104
O 801.521.6186 · FFKR.COM

U OF U BLDG. 303 SEISMIC UPGRADE PROJECT #22508 - PHASE 4 VE
SALT LAKE CITY UTAH
CONSTRUCTION SET - 10-10-2022

STATE OF UTAH JACKSON FERGUSON, AIA #5340047-0301 LICENSED ARCHITECT 10.10.22

DATE REVISION

PROJECT NUMBER 18136

PARKING PLAN

G-004

10/10/2022 2:02:34 PM

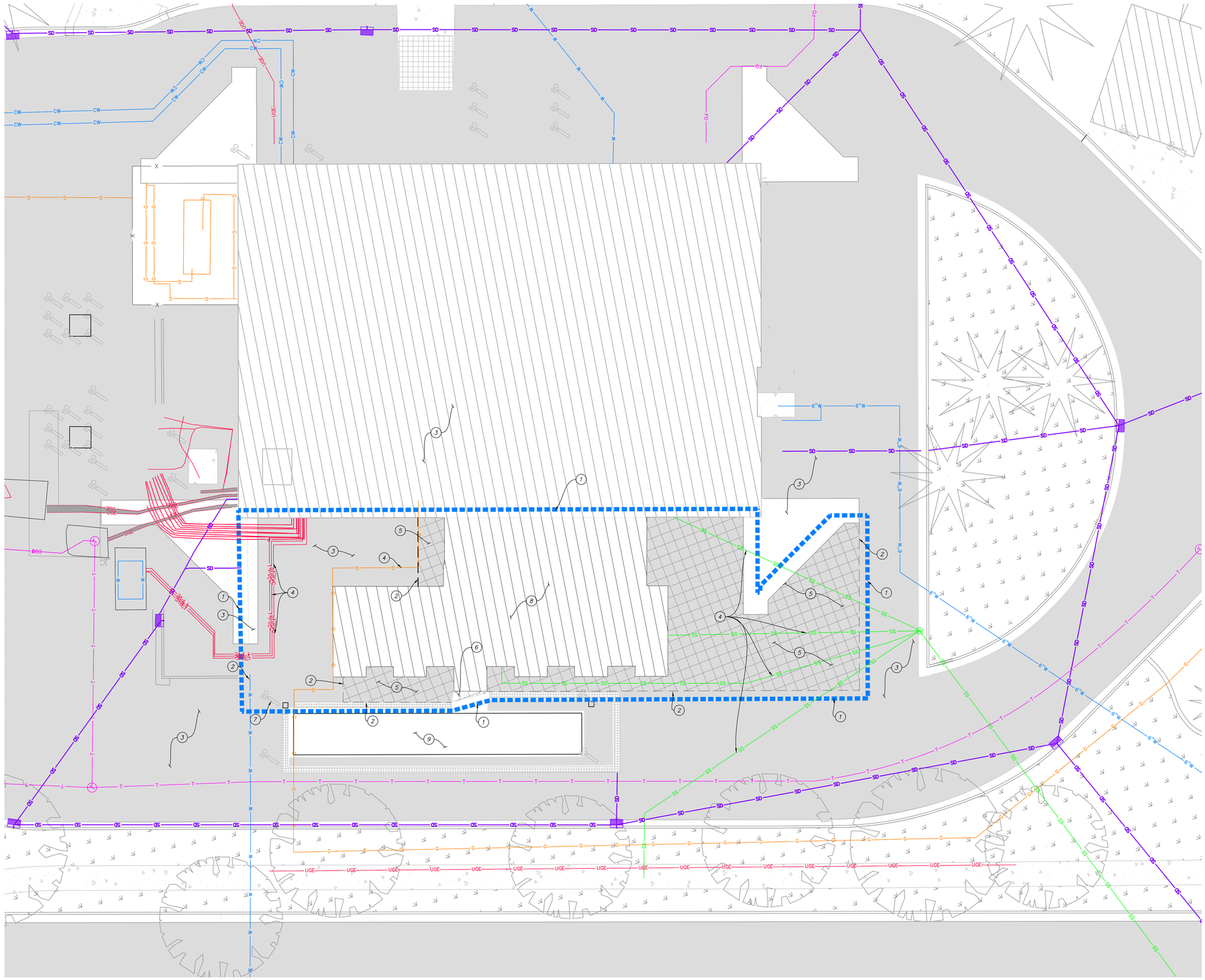

GENERAL NOTES:

1. EXISTING UTILITY INFORMATION SHOWN IS FOR INFORMATIONAL PURPOSES ONLY. IT IS DERIVED FROM RECORD DRAWINGS AND MAY NOT BE LOCATED CORRECTLY AND IS NOT ALL INCLUSIVE. CONTRACTOR SHALL FIELD LOCATE ALL UTILITIES BEFORE BEGINNING DEMOLITION/CONSTRUCTION AND NOTIFY ENGINEER WHEN UNEXPECTED UTILITIES ARE DISCOVERED.

2. THE CONTRACTOR SHALL BE FULLY RESPONSIBLE FOR LOCATING AND PROTECTING FROM DAMAGE ALL EXISTING UTILITIES AND IMPROVEMENTS WHETHER OR NOT SHOWN ON THESE PLANS. THE FACILITIES AND IMPROVEMENTS ARE BELIEVED TO BE CORRECTLY SHOWN BUT THE CONTRACTOR IS REQUIRED TO SATISFY HIMSELF AS TO THE COMPLETENESS AND ACCURACY OF THE LOCATIONS. ANY CONTRACTOR PERFORMING WORK ON THIS PROJECT SHALL FAMILIARIZE THEMSELVES WITH THE SITE AND SHALL BE HELD SOLELY RESPONSIBLE FOR ANY DAMAGE TO EXISTING FACILITIES RESULTING DIRECTLY, OR INDIRECTLY, FROM THEIR OPERATIONS, WHETHER OR NOT SAID FACILITIES ARE SHOWN ON THESE PLANS.

3. PROVIDE ALL CONDUITS AND WIRE NECESSARY TO ENSURE THAT ALL EXISTING SITE LIGHTING RETAINS FULL FUNCTIONALITY THROUGH ALL DEMOLITION AND NEW CONSTRUCTION. ALL EXISTING LIGHTING IS TO BE FUNCTIONAL EACH NIGHT. IF EXISTING CONDUIT OR WIRE IS DAMAGED OR DEMOLISHED, NEW OR TEMPORARY WIRING SHALL BE INSTALLED TO ENSURE THE LIGHTS ARE ON BEFORE DARK

4. ALL CONDUITS AND WIRE FOR DEMOLISHED SITE LIGHTING CIRCUITS TO BE REMOVED BACK TO SOURCE, OR FIX FIXTURE TO REMAIN COMPLETE AND NOT ABANDONED IN PLACE.

SCOPE OF WORK:

1. APPROXIMATE LIMITS–OF–DISTRUBANCE.
2. SAWCUT TO PROVIDE SMOOTH CLEAN EDGE.
3. PRESERVE AND PROTECT EXISTING IMPROVEMENTS AND STRUCTURES BEYOND LIMITS OF DISTURBANCE.
4. PROTECT IN PLACE EXISTING UTILITY.
5. REMOVE AND PROPERLY DISPOSE OF ASPHALT CONCRETE.
6. REMOVE AND PROPERLY DISPOSE OF CONCRETE PAVEMENT.
7. PROTECT IN PLACE EXISTING BOLLARD.
8. REFER TO ARCHITECTURAL DRAWINGS.
9. PROTECT IN PLACE EXISTING SCALE. CONTRACTOR TO COORDINATE WITH UNIVERSITY FACILITIES STAFF OVER SCALED ELECTRICAL COMPONENTS.

SCALE
HORIZONTAL: 1" = 10
0 2.5 5 10 15

FFKR ARCHITECTS
730 Pacific Avenue • Salt Lake City, Utah 84104
© 801.521.5186 • FFKR.COM

TALISMAN CIVIL CONSULTANTS
1588 SOUTH MAIN STREET
SUITE 200
SALT LAKE CITY, UT 84115
801.743.1300

U OF U BLDG. 303 SEISMIC UPGRADE, PROJECT # 22508 - PHASE 4 VE
SALT LAKE CITY UTAH
-
CONSTRUCTION SET - 10-10-2022

REGISTERED PROFESSIONAL LANDSCAPE ARCHITECT
No. 12617457
STATE OF UTAH
10/10/22

△	DATE	REVISION
1	5-17-2022	PHASE 4 ADDENDUM #1
2	10-10-2022	PHASE 4 REDESIGN

PROJECT NUMBER 19-800.66

DEMOLITION PLAN PHASE 4

C101

5/23/2019 2:35:36 PM

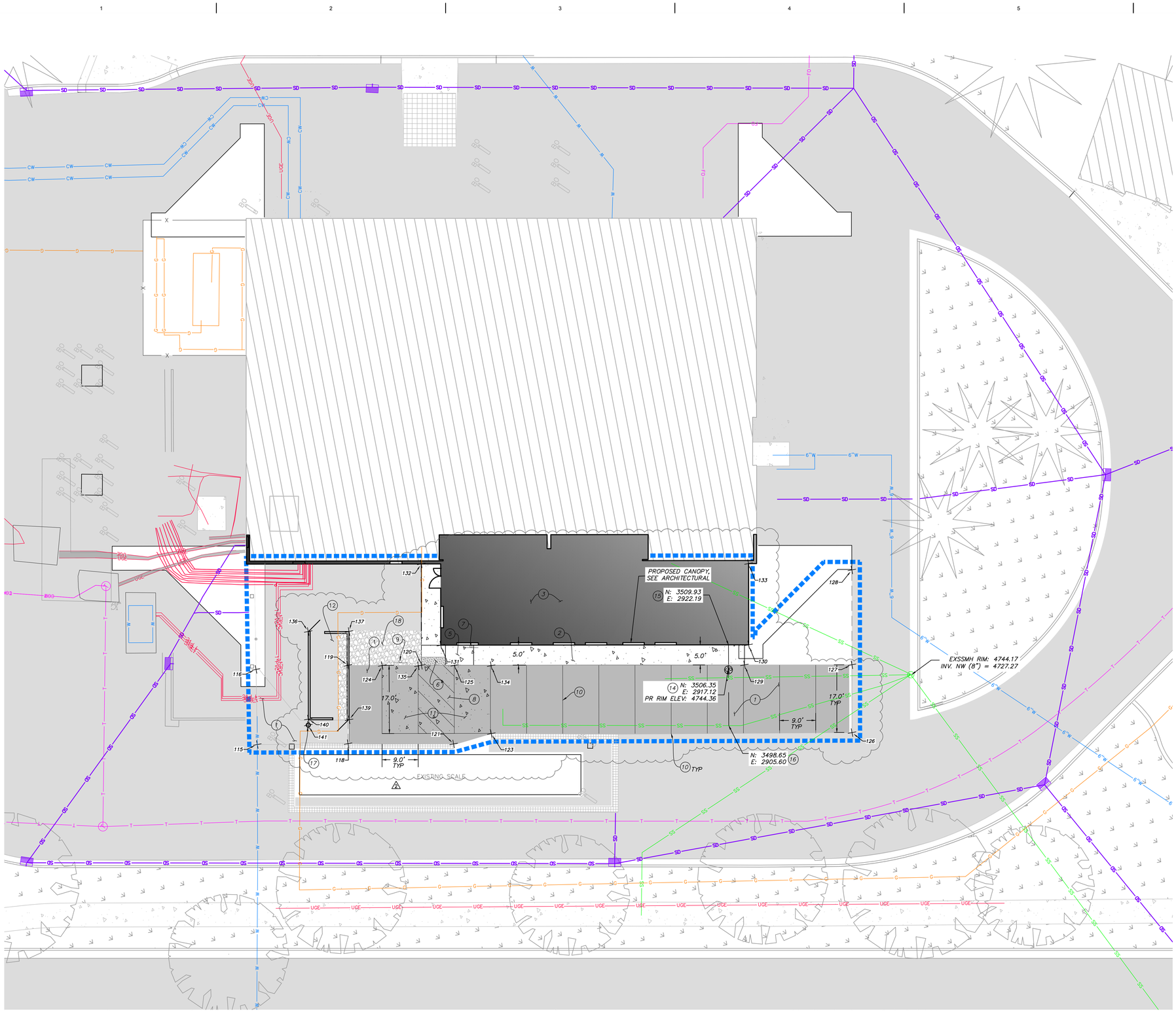

SITE GENERAL NOTES:

EXISTING UNDERGROUND UTILITIES AND IMPROVEMENTS ARE SHOWN IN THEIR APPROXIMATE LOCATIONS BASED UPON RECORD INFORMATION AVAILABLE AT THE TIME OF PREPARATION OF PLANS. LOCATIONS MAY NOT HAVE BEEN VERIFIED IN THE FIELD AND NO GUARANTEE IS MADE AS TO ACCURACY OR COMPLETENESS OF THE INFORMATION SHOWN. IT SHALL BE THE RESPONSIBILITY OF THE CONTRACTOR TO DETERMINE THE EXISTENCE AND LOCATION OF THOSE UTILITIES SHOWN ON THESE PLANS OR INDICATED IN THE FIELD BY LOCATING SERVICES. ANY ADDITIONAL COSTS INCURRED AS A RESULT OF CONTRACTOR'S FAILURE TO VERIFY LOCATIONS OF EXISTING UTILITIES PRIOR TO BEGINNING OF CONSTRUCTION IN THEIR VICINITY SHALL BE BORNE BY THE CONTRACTOR AND ASSUMED INCLUDED IN THE CONTRACT.

LOCATION OF ALL UNDERGROUND UTILITIES SHOWN ARE APPROXIMATE. CONTRACTOR IS TO VERIFY CONNECTION POINTS WITH EXISTING UTILITIES. CONTRACTOR IS RESPONSIBLE FOR ANY DAMAGE CAUSED TO EXISTING UTILITIES AND UTILITY STRUCTURES THAT ARE TO REMAIN.

ALL SURFACE IMPROVEMENTS DISTURBED BY CONSTRUCTION SHALL BE RESTORED OR REPLACED, INCLUDING TREES, DECORATIVE SHRUBS, SOD, FENCES, WALLS AND STRUCTURES, WHETHER OR NOT THEY ARE SPECIFICALLY SHOWN ON THE CONTRACT DOCUMENTS.

SITE SCOPE OF WORK:

PROVIDE, INSTALL AND/OR CONSTRUCT THE FOLLOWING PER THE SPECIFICATIONS GIVEN OR REFERENCED, THE DETAILS NOTED, AND/OR AS SHOWN ON THE CONSTRUCTION DRAWINGS:

1. INSTALL ASPHALT PAVEMENT PER DETAIL C SHEET C700.
2. INSTALL THICKENED EDGE CONCRETE PAVEMENT PER DETAIL A SHEET C700.
3. FUTURE BUILDING. SEE ARCHITECTURAL PLANS.
4. LOADING ZONE STRIPING PER LATEST VERSION M.U.T.C.D.
5. INSTALL CURB CUT ASSEMBLY PER APWA PLAN 236.3, SHEET C700.
6. INSTALL DETECTABLE WARNING SURFACE PER APWA PLAN 238, SHEET C700.
7. INSTALL WALL MOUNTED ADA PARKING SIGN R7-8 PER LATEST VERSION M.U.T.C.D.
8. INSTALL ADA STRIPING PER LATEST VERSION OF M.U.T.C.D.
9. INSTALL WALL MOUNTED VAN ACCESSIBLE ADA PARKING SIGN R7-8b PER LATEST VERSION M.U.T.C.D.
10. 4" WIDE YELLOW PARKING PARKING STRIPE PER M.U.T.C.D.
11. INSTALL VEHICULAR CONCRETE PAVEMENT PER DETAIL B SHEET C700.
12. PROPOSED LOW PRESSURE GAS YARD. SEE ARCHITECTURAL PLANS.
13. PROPOSED SCALE HOUSE. SEE ARCHITECTURAL PLANS.
14. INSTALL SANITARY SEWER CLEANOUT PER APWA PLAN 431 SHEET C700.
15. INSTALL 4" PVC SDR-35. REFER TO MECHANICAL FOR INVERT TO BUILDING.
16. TIE INTO EXISTING 8" SANITARY SEWER LINE WITH WYE CONNECTION.
17. INSTALL 6" STEEL BOLLARD PER UNIVERSITY STANDARDS.
18. CONTRACTOR TO FILL IN EXCAVATED AREA WITH BLENDED BORROW FILL AND TOP WITH A MINIMUM OF 6" GRAVEL.

Point Table		
Point #	Northing	Easting
115	3593.1049	2835.7994
116	3603.8815	2851.0999
118	3574.5346	2848.6795
119	3585.5080	2864.7980
120	3570.3949	2875.0849
121	3552.7528	2863.3790
123	3546.4240	2870.7870
124	3578.4348	2869.5540
125	3563.5250	2879.7258
126	3472.2739	2921.4603
127	3481.7810	2935.4232
128	3495.0712	2954.9426

Point Table		
Point #	Northing	Easting
129	3503.8975	2920.3614
130	3505.8505	2925.0806
131	3569.2138	2881.9381
132	3584.5999	2895.9477
133	3517.2414	2941.8104
134	3555.9714	2884.7668
135	3570.9445	2874.5529
136	3598.4404	2866.2097
137	3590.0367	2871.9315
139	3577.6499	2853.7421
140	3586.1642	2848.1797
141	3585.3200	2846.9398

SCALE
HORIZONTAL: 1" = 10
0 2.5 5 10 15

5/23/2019 2:35:36 PM

FFKR ARCHITECTS
730 Pacific Avenue • Salt Lake City, Utah 84104
© 801.521.8186 • FFKR.COM

TALISMAN CIVIL CONSULTANTS
1588 SOUTH MAIN STREET
SUITE 200
SALT LAKE CITY, UT 84115
801.743.1300

U OF U BLDG. 303 SEISMIC UPGRADE, PROJECT # 22508 - PHASE 4 VE

SALT LAKE CITY UTAH

-

CONSTRUCTION SET - 10-10-2022

REGISTERED PROFESSIONAL ENGINEER
No. 12617457
KYLE W. TALISMAN
10/10/22
STATE OF UTAH

	DATE	REVISION
1	5-17-2022	PHASE 4 ADDENDUM #1
2	10-10-2022	PHASE 4 REDESIGN

PROJECT NUMBER 19-800.66

SITE HORIZONTAL CONTROL & UTILITY PLAN PHASE 4

C201

DATA FROM RECORD DRAWINGS 1964;
OPERATING FLOOR ELEVATION (DATUM FOR BUILDING ELEVATIONS): 4742.0'
BASEMENT FLOOR ELEVATION: 4730.0'

SURVEYED AT OPERATING FLOOR
ELEVATION (DATUM FOR SITE ELEVATIONS): 4745.0'
DELTA: 3.0'

GRADING: GEOTECHNICAL NOTES/REQUIREMENTS:

1) ALL IMPORTED MATERIAL TO BE APPROVED IN WRITING BY GEOTECHNICAL ENGINEER.

2) ALL COMPACTION FOR INTERIOR AND EXTERIOR BACKFILL ADJACENT TO BUILDINGS TO BE VERIFIED IN WRITING BY GEOTECHNICAL ENGINEER.

GRADING GENERAL NOTES:

SITE GRADING SHALL BE PERFORMED IN ACCORDANCE WITH THESE PLANS AND SPECIFICATIONS AND THE RECOMMENDATIONS SET FORTH IN THE GEOTECHNICAL REPORT. THE CONTRACTOR SHALL BE RESPONSIBLE FOR REMOVING AND REPLACING ALL SOFT, YIELDING OR UNSUITABLE MATERIALS AND REPLACING THEM WITH SUITABLE MATERIALS AS SPECIFIED IN THE GEOTECHNICAL REPORT. ALL EXCAVATED OR FILLED AREAS SHALL BE COMPACTED TO 95% OF MODIFIED PROCTOR MAXIMUM DENSITY PER ASTM TEST D-1557 EXCEPT UNDER BUILDING FOUNDATIONS WHERE IT SHALL BE 95% MIN. OF MAXIMUM DENSITY. MOISTURE CONTENT AT TIME OF PLACEMENT SHALL NOT EXCEED 2% ABOVE NOR 3% BELOW OPTIMUM. CONTRACTOR SHALL SUBMIT A COMPACTION REPORT PREPARED BY A QUALIFIED REGISTERED GEOTECHNICAL ENGINEER, VERIFYING THAT ALL FILLED AREAS AND SUBGRADE AREAS WITHIN THE BUILDING PAD AREA AND AREAS TO BE PAVED HAVE BEEN COMPACTED IN ACCORDANCE WITH THESE PLANS & SPECIFICATIONS AND THE RECOMMENDATIONS SET FORTH IN THE GEOTECHNICAL REPORT.

CONTRACTOR SHALL BECOME FAMILIAR WITH EXISTING SOIL CONDITIONS.

THE CONTRACTOR IS TO USE BEST MANAGEMENT PRACTICES FOR PROVIDING EROSION CONTROL AND DUST SUPPRESSION FOR CONSTRUCTION OF THIS PROJECT. SPECIFIC INFORMATION SHOWN ON DRAWINGS C-600 SHALL BE USED IN COMBINATION WITH OTHER ACCEPTED LOCAL PRACTICES.

EXISTING UNDERGROUND UTILITIES AND IMPROVEMENTS ARE SHOWN IN THEIR APPROXIMATE LOCATIONS BASED UPON RECORD INFORMATION AVAILABLE AT THE TIME OF PREPARATION OF PLANS. LOCATIONS MAY NOT HAVE BEEN VERIFIED IN THE FIELD AND NO GUARANTEE IS MADE AS TO ACCURACY OR COMPLETENESS OF THE INFORMATION SHOWN. IT SHALL BE THE RESPONSIBILITY OF THE CONTRACTOR TO DETERMINE THE EXISTENCE AND LOCATION OF THOSE UTILITIES SHOWN ON THESE PLANS OR INDICATED IN THE FIELD BY LOCATING SERVICES. ANY ADDITIONAL COSTS INCURRED AS A RESULT OF CONTRACTOR'S FAILURE TO VERIFY LOCATIONS OF EXISTING UTILITIES PRIOR TO BEGINNING OF CONSTRUCTION IN THEIR VICINITY SHALL BE BORNE BY THE CONTRACTOR AND ASSUMED INCLUDED IN THE CONTRACT.

LOCATIONS OF ALL UNDERGROUND UTILITIES SHOWN ARE APPROXIMATE. CONTRACTOR IS TO VERIFY CONNECTION POINTS WITH EXISTING UTILITIES. CONTRACTOR IS RESPONSIBLE FOR ANY DAMAGE CAUSED TO EXISTING UTILITIES AND UTILITY STRUCTURES THAT ARE TO REMAIN.

ALL SURFACE IMPROVEMENTS DISTURBED BY CONSTRUCTION SHALL BE RESTORED OR REPLACED, INCLUDING TREES, DECORATIVE SHRUBS, SOD, FENCES, WALLS AND STRUCTURES, WHETHER OR NOT THEY ARE SPECIFICALLY SHOWN ON THE CONTRACT DOCUMENTS.

ALL CURB IS ASSUMED TO BE CATCH CURB UNLESS OTHERWISE SPECIFIED.

— – XXXX – — EXISTING ELEVATION CONTOURS

ADA ACCESSIBILITY PATH

NOTE:

NORTHING AND EASTING IS ON UNIVERSITY OF UTAH SURVEY CONTROL. CONTACT UNIVERSITY SURVEYOR TO ESTABLISH CONTROL.

ABBREVIATIONS:

MA	MATCH
EX	EXISTING
EP	EDGE OF PAVEMENT
SW	EDGE OF SIDEWALK
TBC	TOP BACK OF CURB

NOTE: MAY CONTAIN ABBREVIATIONS THAT ARE NOT USED IN THIS PLAN SET.

SCALE

HORIZONTAL: 1" = 10

0 2.5 5 10 15

FFKR ARCHITECTS
730 Pacific Avenue • Salt Lake City, Utah 84104
© 801.521.5186 • FFKR.COM

TALISMAN
CIVIL CONSULTANTS
1588 SOUTH MAIN STREET
SUITE 200
SALT LAKE CITY, UT 84115
801.743.1300

U OF U BLDG. 303 SEISMIC UPGRADE, PROJECT # 22508 - PHASE 4 VE

SALT LAKE CITY UTAH

-

CONSTRUCTION SET - 10-10-2022

REGISTERED PROFESSIONAL ENGINEER No. 12617457 STATE OF UTAH 10/10/22

	DATE	REVISION
1	5-17-2022	PHASE 4 ADDENDUM #1
2	10-10-2022	PHASE 4 REDESIGN

PROJECT NUMBER 19-800.66

GRADING PLAN PHASE 4

C401-4

5/23/2019 2:35:36 PM

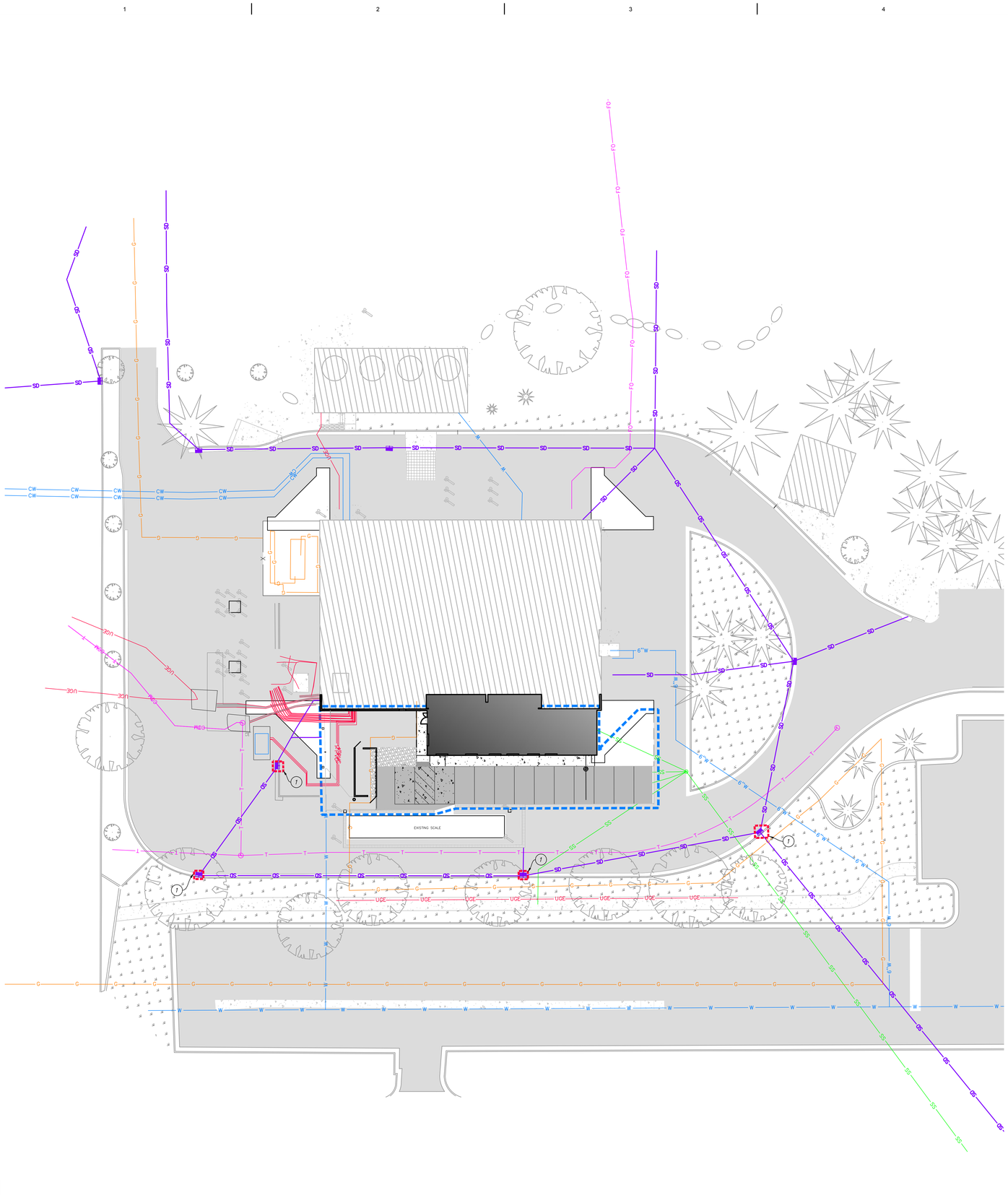

GENERAL NOTES:

THE CONTRACTOR TO USE BEST MANAGEMENT PRACTICES FOR PROVIDING EROSION CONTROL FOR CONSTRUCTION OF THIS PROJECT. SPECIFIC DETAILS SHOWN ON C401 SHALL BE USED IN COMBINATION WITH OTHER ACCEPTED LOCAL PRACTICES.

ALL MATERIAL AND WORKMANSHIP SHALL CONFORM TO THE UNIVERSITY OF UTAH'S EROSION CONTROL STANDARDS AND SPECIFICATIONS AND ALL WORK SHALL BE SUBJECT TO INSPECTION BY THE UNIVERSITY OF UTAH. ALSO INSPECTORS WILL HAVE THE RIGHT TO CHANGE THE FACILITIES AS NEEDED.

THE CONTRACTOR SHALL BE RESPONSIBLE FOR FIELD VERIFYING THE LOCATION OF ALL EXISTING UTILITIES. IF CONFLICTS OCCUR, THE CONTRACTOR SHALL NOTIFY THE ENGINEER PRIOR TO CONSTRUCTION TO DETERMINE IF ANY FIELD ADJUSTMENTS SHOULD BE MADE.

THE CONTRACTOR SHALL PROVIDE ADEQUATE DUST CONTROL.

WHEN GRADING OPERATIONS ARE COMPLETED AND THE DISTURBED GROUND IS LEFT "OPEN" FOR 30 DAYS OR MORE, THE AREA SHALL BE FURROWED PARALLEL TO THE CONTOURS.

THE CONTRACTOR SHALL MODIFY EROSION CONTROL MEASURES TO ACCOMMODATE PROJECT PLANNING.

ALL BEST MANAGEMENT PRACTICES (BMP'S) SHOWN ON THIS PLAN MUST BE MAINTAINED AT ALL TIMES UNTIL A CERTIFICATE OF OCCUPANCY IS ISSUED BY OGDEN CITY.

ALL ACCESS TO PROPERTY WILL BE FROM PUBLIC RIGHT-OF-WAYS.

MAINTENANCE:

THE CONTRACTOR'S RESPONSIBILITY SHALL INCLUDE MAKING ROUTINE CHECKS ON ALL EROSION CONTROL MEASURES TO DETERMINE IF REPAIR OR SEDIMENT REMOVAL IS NECESSARY. CHECKS SHALL BE MADE BASED ON CONDITIONS THAT MAY ARISE IN THE FIELD OR ADDITIONAL CONTROL AS DEEMED NECESSARY.

SEDIMENT DEPOSITS SHOULD BE REMOVED AFTER EACH RAINFALL. THEY MUST BE REMOVED WHEN THE LEVEL OF DEPOSITION REACHES APPROXIMATELY ONE-HALF THE HEIGHT OF BARRIER.

NECESSARY REPAIRS TO BARRIERS OR REPLACEMENT OF FILTER SOCK SHALL BE ACCOMPLISHED PROMPTLY.

CLOSE ATTENTION SHALL BE PAID TO THE REPAIR OF DAMAGED FILTER SOCK, END RUNS, AND UNDERCUTTING BENEATH FILTER SOCK.

FILTER SOCK BARRIERS SHALL BE INSPECTED IMMEDIATELY AFTER EACH RAINFALL AND AT LEAST DAILY DURING PROLONGED RAINFALL.

SCOPE OF WORK:

PROVIDE, INSTALL AND/OR CONSTRUCT THE FOLLOWING PER THE SPECIFICATIONS GIVEN OR REFERENCED, THE DETAILS NOTED, AND/OR AS SHOWN ON THE CONSTRUCTION DRAWINGS:

(1) INLET PROTECTION AROUND EXISTING OR NEW STORM DRAIN CATCH BASINS OR INLETS. SEE DETAIL D, SHEET 700.

LEGEND:

INLET PROTECTION

SCALE

HORIZONTAL: 1" = 20

0 5 10 20 30

5/23/2019 2:35:36 PM

FFKR ARCHITECTS
730 Pacific Avenue • Salt Lake City, Utah 84104
© 801.521.6186 • FFKR.COM

TALISMAN
CIVIL CONSULTANTS
1588 SOUTH MAIN STREET
SUITE 200
SALT LAKE CITY, UT 84115
801.743.1300

U OF U BLDG. 303 SEISMIC UPGRADE, PROJECT # 22508 - PHASE 4 VE

SALT LAKE CITY UTAH

-

CONSTRUCTION SET - 10-10-2022

REGISTERED PROFESSIONAL ENGINEER
No. 12617457
STATE OF UTAH
10/10/22

△	DATE	REVISION
1	5-17-2022	PHASE 4 ADDENDUM #1
2	10-10-2022	PHASE 4 REDESIGN

PROJECT NUMBER 19-800.66

EROSION CONTROL PLAN PHASE 4

C601-4

Mid-block curb cut assembly

1. **GENERAL**
   - A. Where existing elements or spaces are altered to receive an assembly; slopes and dimensions shall comply with slopes and dimensions shown on the drawing, or to the maximum extent feasible permitted by the ENGINEER. Final configuration of the assembly may be different than shown.
   - B. Installation of a curb wall is ENGINEER's choice.
   - C. Definitions and supplemental requirements are specified in APWA Section 32 16 14.

2. **PRODUCTS**
   - A. Base Course: Untreated base course, APWA Section 32 11 23. Do not use gravel as a base course without ENGINEER's permission.
   - B. Expansion Joint Filler: 1/2-inch thick type F1 full depth, APWA Section 32 13 73..
   - C. Detectable Warning Surface: Paver, ribbed composite panel, or tile. Provide a color that contrasts with adjacent walking surface, either light-on-dark or dark-on-light. ENGINEER to select type and color unless indicated elsewhere.
   - D. Concrete: Class 4000, APWA Section 03 30 04.
   - E. Concrete Curing Agent: Clear membrane forming compound with fugitive dye (Type ID Class A), APWA Section 03 39 00.

3. **EXECUTION**
   - A. Base Course Placement: APWA Section 32 05 10. Maximum lift thickness before compaction is 8-inches when using riding equipment or 6-inches when using hand held equipment. Compaction is95 percent or greater relative to a modified proctor density, APWA Section 31 23 26.
   - B. Curb Modifications:
     1) The sloped surface created to accommodate the ramp or approach areas shall be perpendicular to the back of curb.
     2) No grade break shall exist between the flow-line and the turning space. Length of the curb modification abutting the turning space is 4 feet minimum.
   - C. Curb Ramp: Length not required to exceed 15 feet. Grade breaks are perpendicular to the direction of ramp run and are not permitted on the ramp or turning space surface. Sides are parallel to each other and perpendicular to the ends.
   - D. Curb Wall: Set top of curb wall equal to elevation of extended lateral lines of sidewalk.
   - E. Concrete Placement: APWA Section 03 30 10.
     1) Maximum length to width ratio for rectangular panel joints is 1.5 to 1. Joint spacing measured in feet not to exceed twice slab thickness measured in inches or a maximum of 15 feet.
     2) Install expansion joints vertical, full depth, with top of filler set flush with concrete surface. Install contraction joints vertical, 1/8-inch wide, and 1/4 of the depth of the concrete flatwork.
     3) Provide 1/2-inch radius edges. Apply a broom finish. Apply a curing agent.
   - F. Clear Space: No trip hazards in the clear space.

TURNING SPACE AT STREET LEVEL

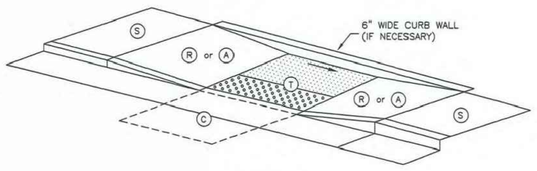

EXAMPLE 5

ELEMENT	DIMENSION
R A	4 FEET WIDE MINIMUM
C T	4 FEET SQUARE MINIMUM

WHERE TURNING SPACE IS CONSTRAINED ON 2 SIDES, PROVIDE 5 FEET IN THE DIRECTION OF THE CROSSWALK

TABLE OF DIMENSIONS

		RUNNING SLOPE (%) MAXIMUM	CROSS SLOPE (%) MAXIMUM
TURNING SPACE	T	STREET GRADE	2
CURB RAMP	R	8.33	2
CLEAR SPACE	C	5	STREET GRADE
SIDEWALK	S	STREET GRADE	2
APPROACHE	A	8.33	2

(a) RUNNING SLOPE IS IN THE DIRECTION OF PEDESTRIAN TRAVEL. RUNNING SLOPE OF FLARE IS PARALLEL TO BACK OF CURB
(b) CROSS SLOPE IS PERPENDICULAR TO DIRECTION OF PEDESTRIAN TRAVEL

SLOPE TABLE

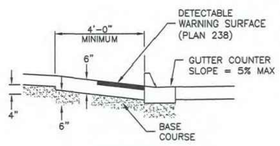

MATERIALS

APWA Utah Chapter — ***Mid-block curb cut assembly*** — Plan 236.3 September 2011

Detectable warning surface

1. **GENERAL**
   - A. Detectable warnings consist of a surface of truncated domes aligned in a square or radial grid pattern with dome size, dome spacing, contrast and panel size as indicated.
   - C. Definitions and supplemental requirements are specified in APWA Section 32 16 14.

2. **PRODUCTS**
   - A. Pavers:
     1) Concrete, APWA Section 32 14 13.
     2) Brick and Mortar, APWA Section 32 14 16.
   - B. Tile: Unless indicated elsewhere, selection is by CONTRACTOR as allowed by ENGINEER.
   - C. Ribbed Composite Panel: Unless indicated elsewhere, selection is by CONTRACTOR as allowed by ENGINEER.
   - D. Bedding Sand, Joint Sand, Geotextile: APWA Section 32 14 13.

3. **EXECUTION**
   - A. Layout:
     1) Joints Between Units: 3/16 inch maximum or manufacturer's recommendation.
     2) Flares: Do not install detectable warning units on flared surfaces.
     3) Alignment: Where a ramp, turning space, or blended transition provides access to the street continuously around a corner, align the vertical rows of truncated domes to be perpendicular or radial to the grade break between the ramp and the street for a 4 feet minimum width for each crosswalk served.
     4) Transition 1 or 2: Selection is by ENGINEER unless indicated elsewhere.
     5) At Rail Crossings: The edge of the detectable warning surface nearest the rail crossing is 6 feet minimum and 15 feet maximum from the centerline of the nearest rail.
   - B. Paver Installation: APWA Section 32 14 13. If paver must be cut, minimum paver cut length is 3/4 paver, or 1/2 paver length providing the adjacent paver is also reduced no more than 1/2 its original length. Do not cut pavers longitudinally. Remove domes that were cut.
   - C. Tile Installation: Install according to manufacturer's recommendations. Remove domes that were cut.
   - D. Ribbed Composite Panel Installation: Install according to manufacturer's recommendation. Remove domes that were cut. Seal cuts to prevent water intrusion.

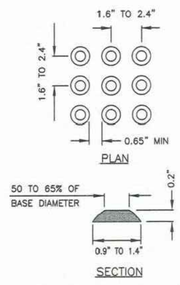

TRUNCATED DOME DETAIL

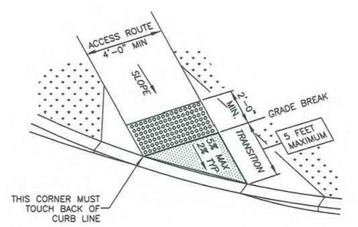

TRANSITION 1

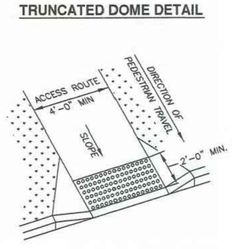

PERPENDICULAR ASSEMBLY

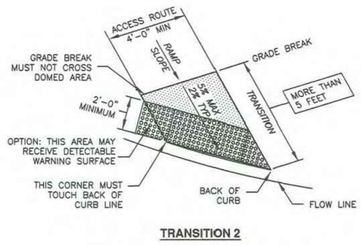

TRANSITION 2

NON-PERPENDICULAR ASSEMBLY

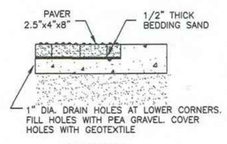

STYLE P

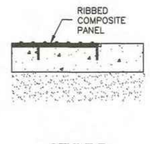

STYLE R

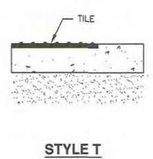

STYLE T

APWA Utah Chapter — ***Detectable warning surface*** — Plan 238 July 2011

Sewer lateral connection

1. **GENERAL**
   - A. Before installation, secure acceptance by ENGINEER for all pipe, fittings, and couplings to be used.
   - B. Before backfilling, secure inspection of installation by ENGINEER. Give at least 24 hours notice.
   - C. Verify if CONTRACTOR or agency is to install the wye.

2. **PRODUCTS**
   - A. Base Course: Untreated base course, APWA Section 32 11 23. Do not use gravel as a base course without ENGINEER's permission.
   - B. Backfill: Common fill, APWA Section 31 05 13. Maximum particle size 2-inches.
   - C. Provide agency approved wye or tee with appropriate donut.
   - D. Stainless steel straps required.

3. **EXECUTION**
   - A. Tape wrap pipe as required by soil conditions.
   - B. Remove core plug from sewer main. Do not break into sewer main to make connection.
   - C. Base Course and Backfill Placement: Maximum lift thickness is 8-inches before compaction. Compaction is 95 percent or greater relative to a standard proctor density, APWA Section 31 23 26.

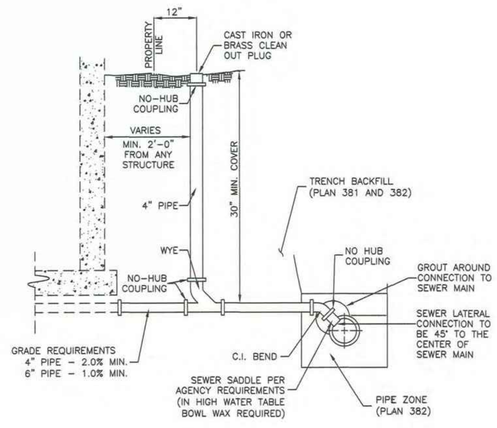

APWA Utah Chapter — ***Sewer lateral connection*** — Plan 431 January 2011

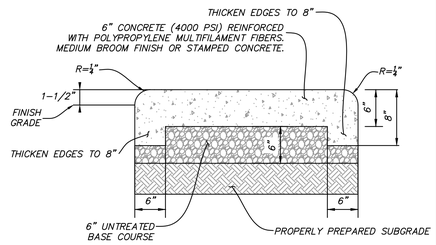

NOTE:
EXPANSION AND CONTRACTION JOINTS ARE TO BE PLACED PER APWA STANDARD PLAN NO. 231 FOR LONGITUDINAL WALKWAYS.

PEDESTRIAN CONCRETE PAVEMENT SECTION
A — SCALE: N.T.S.

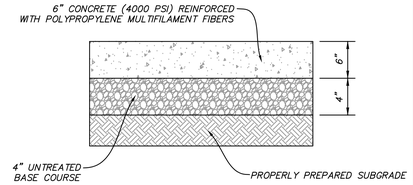

NOTE:
EXPANSION AND CONTRACTION JOINTS ARE TO BE PLACED ON A 10' GRID SPACING (CONTRACTION JOINTS) AND 50' GRID SPACING (EXPANSION JOINTS).

VEHICULAR CONCRETE PAVEMENT SECTION
B — SCALE: N.T.S.

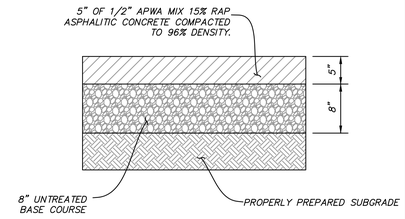

ASPHALT PAVEMENT SECTION
C — SCALE: N.T.S.

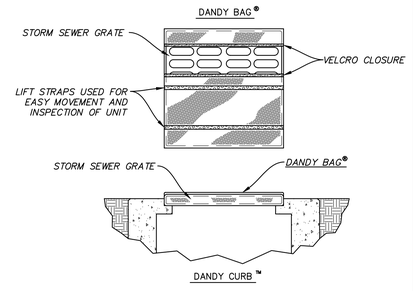

INLET PROTECTION
D — NOT TO SCALE

FFKR ARCHITECTS
730 Pacific Avenue • Salt Lake City, Utah 84104
© 801.521.5186 • FFKR.COM

TALISMAN CIVIL CONSULTANTS

U OF U BLDG. 303 SEISMIC UPGRADE, PROJECT # 22508 - PHASE 4 VE
SALT LAKE CITY UTAH
-
CONSTRUCTION SET - 10-10-2022

REGISTERED PROFESSIONAL ENGINEER — No. 12617457 — STATE OF UTAH — 10/10/22

△	DATE	REVISION
1	5-17-2022	PHASE 4 ADDENDUM #1
2	10-10-2022	PHASE 4 REDESIGN

PROJECT NUMBER 19-800.66

CIVIL DETAILS PHASE 4

C700-4

5/23/2019 2:35:36 PM

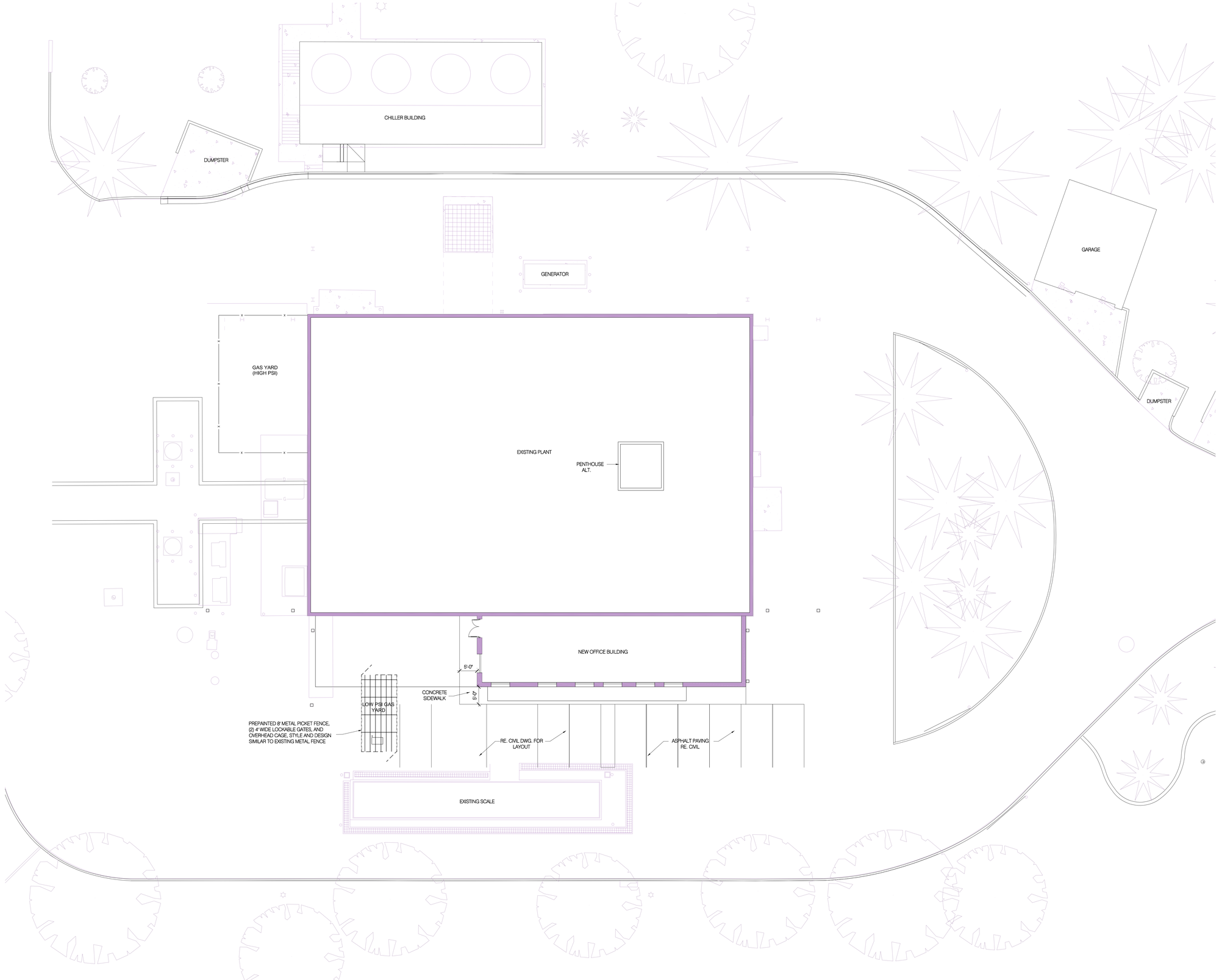

A1 OVERALL SITE PLAN

SCALE: 3/32" = 1'-0"

SYMBOL LEGEND

EXISTING CURB, GUTTER AND ASPHALT TO BE REMOVED

EXISTING GRAVEL

FFKR ARCHITECTS
730 Pacific Avenue · Salt Lake City, Utah 84104
© 801.521.6186 · FFKR.COM

U OF U BLDG. 303 SEISMIC UPGRAGE, PROJ. #22508 - PHASE 4 VE

SALT LAKE CITY UTAH

- CONSTRUCTION SET 10-10-2022

△	DATE	REVISION
1	5-17-22	Ph. 4 Add #1

PROJECT NUMBER 18136

OVERALL SITE PLAN PH-4

AS-101-4

REFERENCE NOTES

02.01 REMOVE EXISTING WINDOW
02.02 REMOVE EXISTING MASONRY WALL FROM 11'-0" A.F.F. AND UP. BRACE EXISTING MASONRY, MEP EQUIPMENT, CONDUITS, PIPES, ETC. AS REQ'D. SALVAGE @ 40 SF FOR PATCH & REPAIR
02.03 REMOVE EXISTING MASONRY WALL
02.12 REMOVE ENTIRE OFFICE BUILDING, CONCRETE SLAB, FOOTING AND FOUNDATION
02.15 REMOVE EXISTING WALL
02.22 EXISTING STAIRS TO REMAIN
02.33 EXISTING WALL TO REMAIN
02.35 EXISTING BUTTRESS FRAMEWORK FROM PREVIOUS PHASE TO REMAIN AND PROTECT
02.39 NO WORK PERFORMED IN THIS AREA
02.56 PEEL ROOFING BACK 3'-0" OR AS REQ'D, TO BE REUSED WITH NEW ROOFING OR WALL ASSEMBLY
02.67 EXISTING CONCRETE FLOOR/SLAB OR ASPHALT PAVING TO REMAIN
02.72 PROTECT EXSTING GAS LINES
02.77 REMOVE EXISTING ANALOG SCALE, COORDINATE WITH SCALE CONVERSION COMPANY
02.79 REMOVE EXISTING CONCRETE/ASPHALT & FOOTING AND FOUNDATION, PREP FOR NEW CONSTRUCTION,
02.80 REMOVE EXISTING METAL WALL PANEL, PREP FOR NEW INSULATED METAL PANEL

PHASE 4 DEMO LEGEND

EXISTING TO BE REMOVED

CONCRETE FLOOR

FLOOR GRATE

NO WORK PERFORMED IN THIS AREA

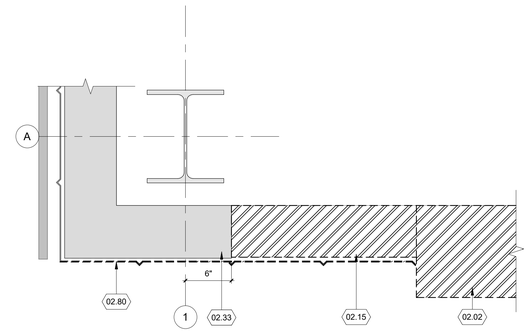

C5 BUTTRESS CORNER DEMO
SCALE: 1 1/2" = 1'-0"

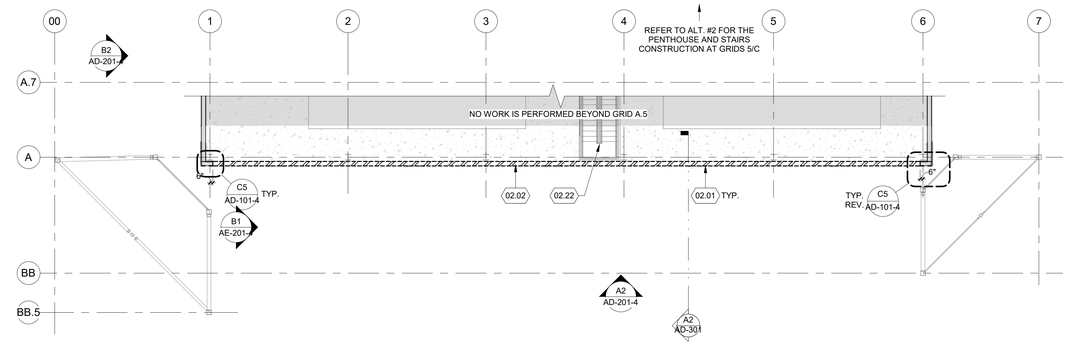

C1 DEMO-FAN FLOOR PLAN (EL. 4772'-0")
SCALE: 3/32" = 1'-0"

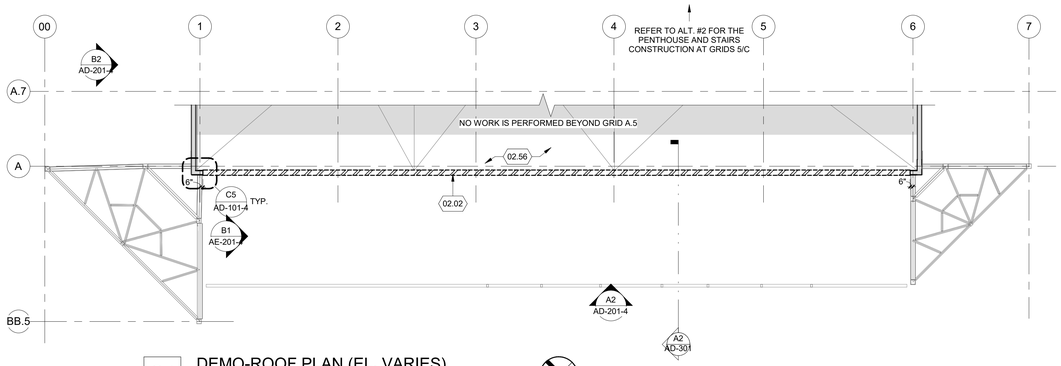

C4 DEMO-ROOF PLAN (EL. VARIES)
SCALE: 3/32" = 1'-0"

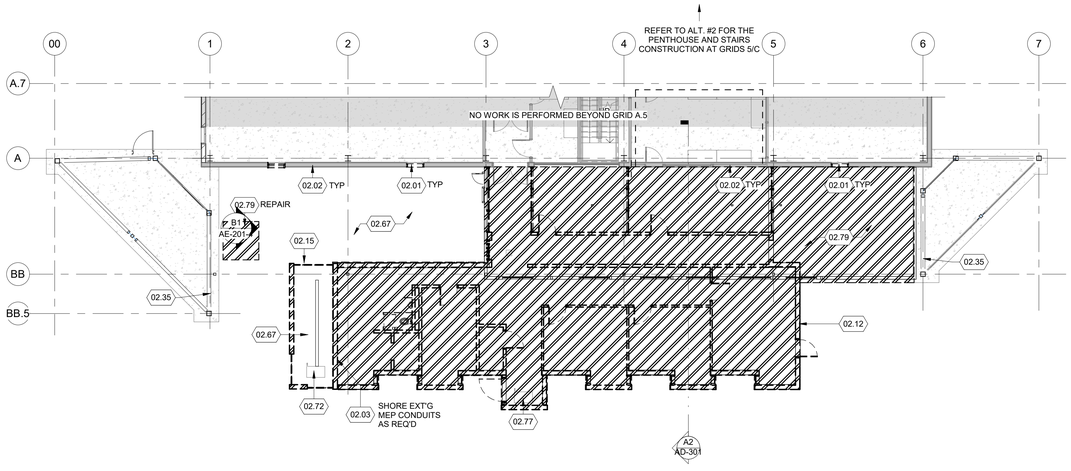

A1 DEMO-OPERATING FLOOR PLAN
SCALE: 3/32" = 1'-0"

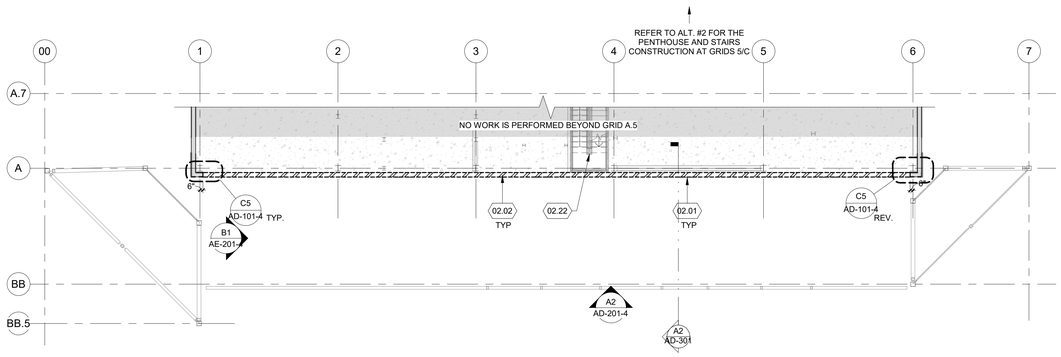

A4 DEMO-PIPING FLOOR PLAN (EL. 4757'-0")
SCALE: 3/32" = 1'-0"

FFKR ARCHITECTS
730 Pacific Avenue · Salt Lake City, Utah 84104
O 801.521.6186 · FFKR.COM

U OF U BLDG. 303 SEISMIC UPGRADE PROJECT #22508 - PHASE 4 VE
SALT LAKE CITY UTAH
CONSTRUCTION SET - 10-10-2022

STATE OF UTAH · JACKSON FERGUSON, AIA · #514062-2001 · LICENSED ARCHITECT · 10.10.22

△	DATE	REVISION
9	5-17-22	Ph. 4 Add #1

PROJECT NUMBER 18136

DEMO FLOOR & ROOF PLANS PHASE 4

AD-101-4

10/10/2022 2:01:45 PM

REFERENCE NOTES

02.01 REMOVE EXISTING WINDOW
02.02 REMOVE EXISTING MASONRY WALL FROM 11'-0" A.F.F. AND UP, BRACE EXISTING MASONRY, MEP EQUIPMENT, CONDUITS, PIPES, ETC. AS REQ'D. SALVAGE @ 40 SF FOR PATCH & REPAIR
02.06 EXISTING MASONRY WALL TO REMAIN TO 11'-0" A.F.F.
02.12 REMOVE ENTIRE OFFICE BUILDING, CONCRETE SLAB, FOOTING AND FOUNDATION
02.35 EXISTING BUTTRESS FRAMEWORK FROM PREVIOUS PHASE TO REMAIN AND PROTECT
02.72 PROTECT EXISTING GAS LINES
02.80 REMOVE EXISTING METAL WALL PANEL, PREP FOR NEW INSULATED METAL PANEL

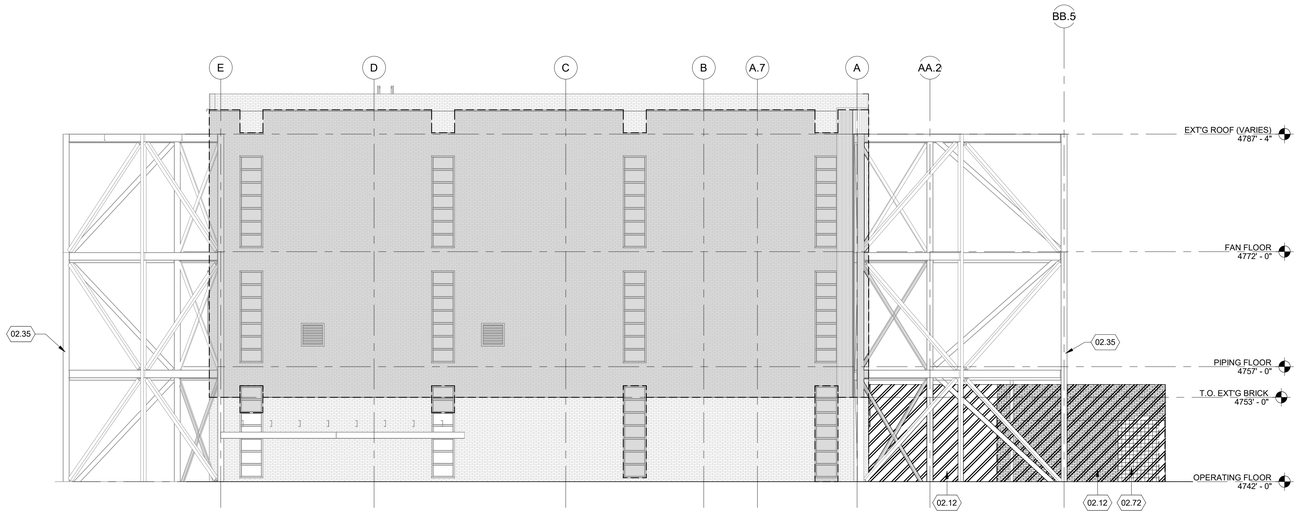

B2 DEMO-NORTH ELEVATION
SCALE: 1/8" = 1'-0"

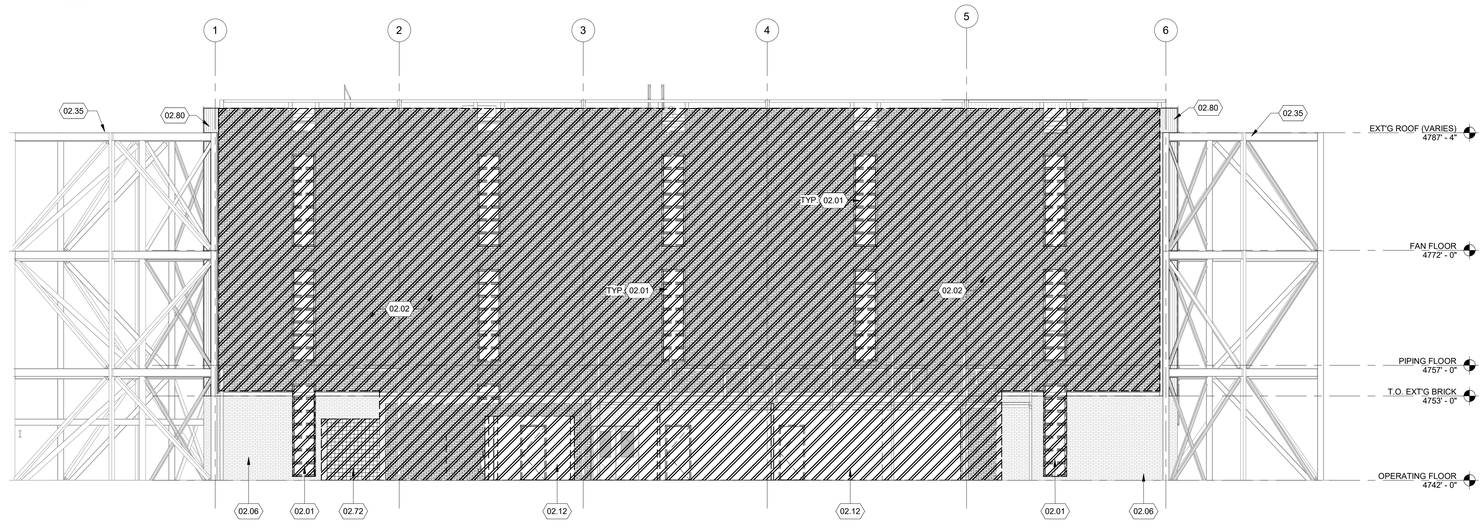

A2 DEMO-WEST ELEVATION
SCALE: 1/8" = 1'-0"

PHASE 4 DEMO LEGEND

EXISTING TO BE REMOVED

MASONRY WALL

FFKR ARCHITECTS
730 Pacific Avenue · Salt Lake City, Utah 84104
O 801.521.6186 · **FFKR.COM**

U OF U BLDG. 303 SEISMIC UPGRADE PROJECT #22508 - PHASE 4 VE
SALT LAKE CITY UTAH
CONSTRUCTION SET - 10-10-2022

STATE OF UTAH · JACKSON FERGUSON, AIA · #534047-4301 · LICENSED ARCHITECT · 10.10.22

△	DATE	REVISION
9	5-17-22	Ph. 4 Add #1

PROJECT NUMBER 18136

DEMO EXTERIOR ELEVATIONS PHASE 4

AD-201-4

10/10/2022 2:01:49 PM

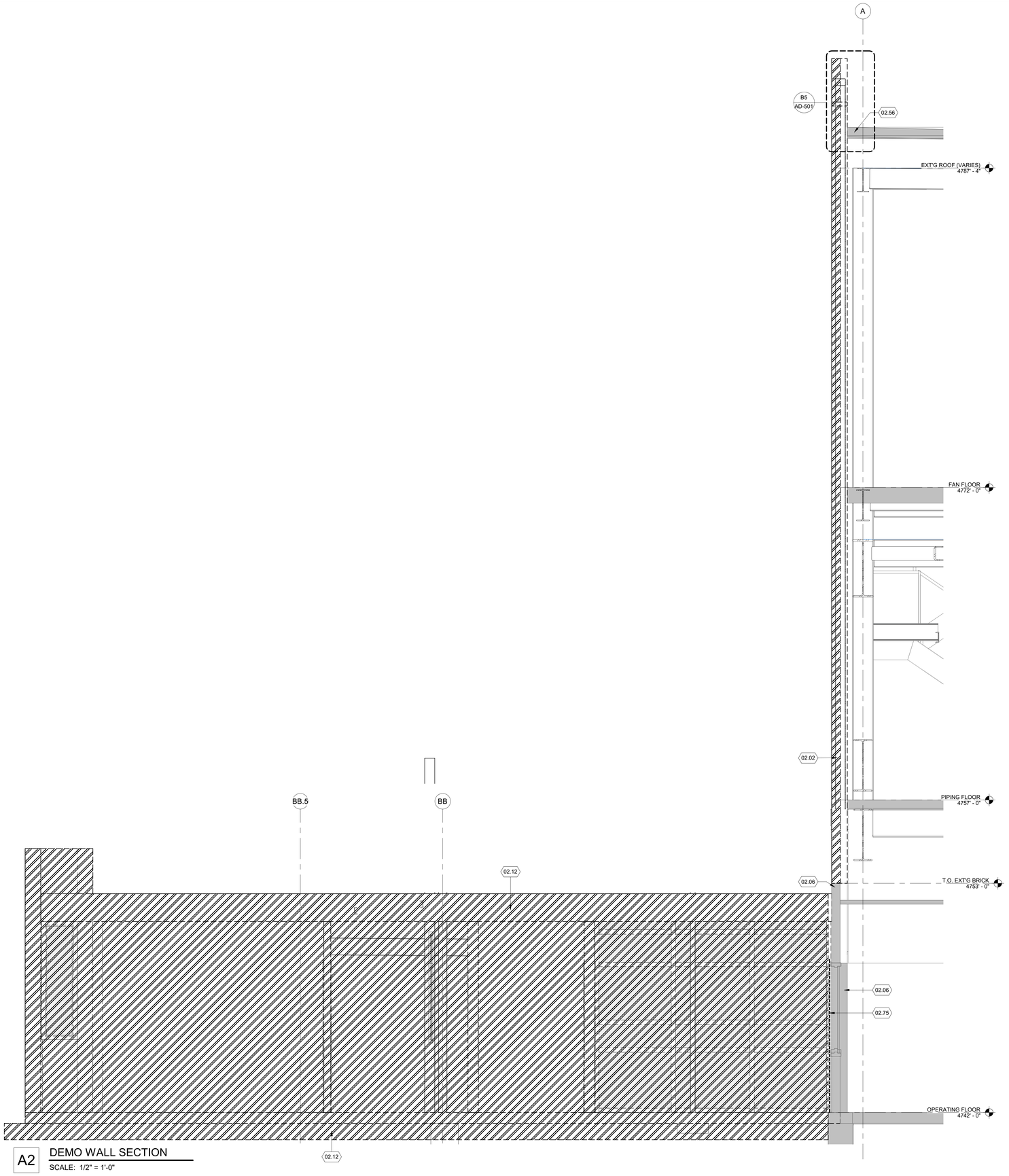

A2 DEMO WALL SECTION
SCALE: 1/2" = 1'-0"

REFERENCE NOTES

02.02 REMOVE EXISTING MASONRY WALL FROM 11'-0" A.F.F. AND UP, BRACE EXISTING MASONRY, MEP EQUIPMENT, CONDUITS, PIPES, ETC. AS REQ'D. SALVAGE @ 40 SF FOR PATCH & REPAIR

02.06 EXISTING MASONRY WALL TO REMAIN TO 11'-0" A.F.F.

02.12 REMOVE ENTIRE OFFICE BUILDING, CONCRETE SLAB, FOOTING AND FOUNDATION

02.56 PEEL ROOFING BACK 3'-0" OR AS REQ'D, TO BE REUSED WITH NEW ROOFING OR WALL ASSEMBLY

02.75 SOLID & DUST PROOF CONSTRUCTION BARRIER

FFKR ARCHITECTS
730 Pacific Avenue · Salt Lake City, Utah 84104
O 801.521.6186 · FFKR.COM

U OF U BLDG. 303 SEISMIC UPGRADE PROJECT #22508 - PHASE 4 VE
SALT LAKE CITY UTAH
CONSTRUCTION SET - 10-10-2022

STATE OF UTAH
JACKSON FERGUSON, AIA
#5340047-0301
LICENSED ARCHITECT
10.10.22

△	DATE	REVISION

PROJECT NUMBER 18136

DEMO WALL SECTIONS

AD-301

10/10/2022 2:01:50 PM

REFERENCE NOTES

02.02	REMOVE EXISTING MASONRY WALL FROM 11'-0" A.F.F. AND UP. BRACE EXISTING MASONRY, MEP EQUIPMENT, CONDUITS, PIPES, ETC. AS REQ'D. SALVAGE @ 40 SF FOR PATCH & REPAIR
02.07	EXISTING MASONRY WALL TO REMAIN
02.10	EXISTING DECKING TO REMAIN FROM GRID A TO B
02.24	REMOVE EXISTING ROOFING AND INSULATION
02.30	EXISTING ROOFING AND INSULATION TO REMAIN
02.45	REMOVE EXISTING RAIL AT CUTOUT
02.46	EXISTING STRUCTURE TO REMAIN
02.56	PEEL ROOFING BACK 3'-0" OR AS REQ'D, TO BE REUSED WITH NEW ROOFING OR WALL ASSEMBLY
02.58	REMOVE EXISTING METAL COPING AND ASSOCIATED BLOCKING
02.59	REMOVE EXISTING ROOFING, INSULATION AND DECKING BELOW
05.07	6" METAL STUD
05.08	METAL ROOF DECKING, PAINTED IF EXPOSED
05.28	STEEL STUB, RE. STR. DWG.
07.01	RIGID ROOF INSULATION. MIN. R 32,, THICKNESS VARIES
07.14	VAPOR RETARDER, TO SPAN CONTINUOUSLY BELOW NEW CONCRETE SLAB ON GRADE, ABOVE METAL ROOF DECK, AND ON THE INSIDE OF METAL STUD WALL, TAPE AT ALL EXPOSED JOINTS
07.19	SINGLE PLY ROOFING MEMBRANE TO WRAP OVER CURB WALL
07.20	1/2" EXTERIOR GLASS MAT SHEATHING
07.23	2" RIGID INSULATION, MIN. R12
09.17	5/8" COVER BOARD

REMOVE/DEMOLISH PENTHOUSE CURB FROM THE PHASE 2 PROJECT SCOPE

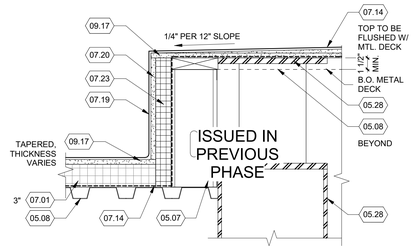

NOTE: TOP OF THE PENTHOUSE CURB TO BE LEVELED, SLOPING IS ACHIEVED THROUGH TAPERED INSULATION OR SLOPED METAL DECK

C4 PENTHOUSE CURB @ CORNER-DEMO

SCALE: 1 1/2" = 1'-0"

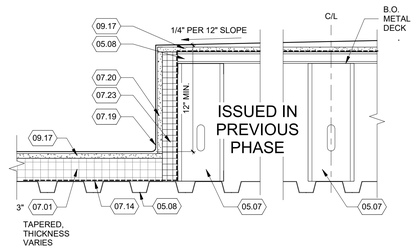

NOTE: TOP OF THE PENTHOUSE CURB TO BE LEVELED, UNIFORMED THROUGHOUT, SLOPING IS ACHIEVED THROUGH TAPERED INSULATION OR SLOPED METAL DECK

B4 PENTHOUSE CURB-DEMO

SCALE: 1 1/2" = 1'-0"

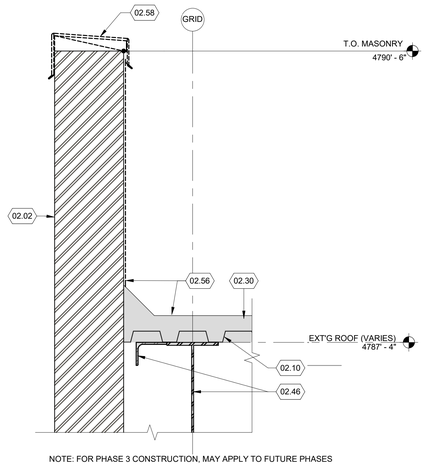

NOTE: FOR PHASE 3 CONSTRUCTION, MAY APPLY TO FUTURE PHASES

B5 PARAPET DEMO SECTION

SCALE: 1 1/2" = 1'-0"

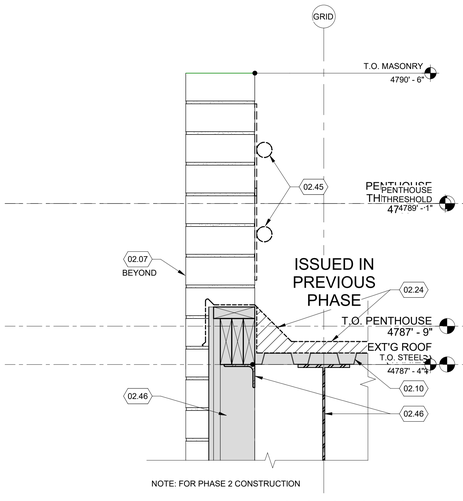

NOTE: FOR PHASE 2 CONSTRUCTION

A2 PARAPET DEMO SECTION GRIDS A-B (ABOVE EXISTING WINDOWS)

SCALE: 1 1/2" = 1'-0"

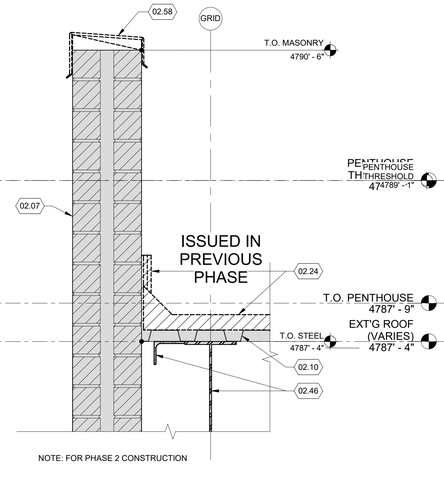

NOTE: FOR PHASE 2 CONSTRUCTION

A3 PARAPET DEMO SECTION GRIDS A-B

SCALE: 1 1/2" = 1'-0"

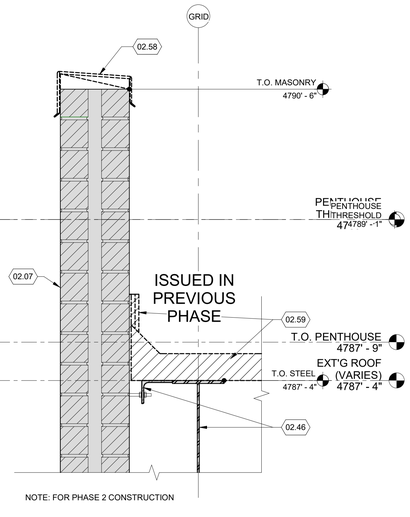

NOTE: FOR PHASE 2 CONSTRUCTION

A4 PARAPET DEMO SECTION GRIDS B-E

SCALE: 1 1/2" = 1'-0"

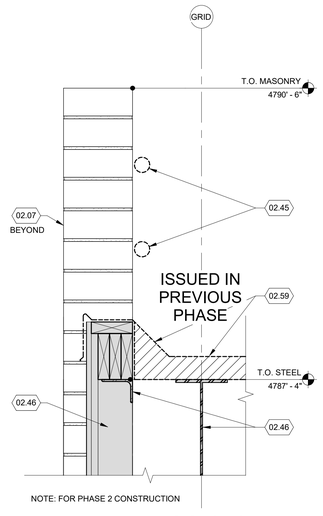

NOTE: FOR PHASE 2 CONSTRUCTION

A5 PARAPET DEMO SECTION (ABOVE EXISTING WINDOWS)

SCALE: 1 1/2" = 1'-0"

PHASE 4 NOTES

1. NO FURRING NOR TILE BEHIND THE LOWER MILLWORK AT THE EXISTING WALL @ WARMING KITCHEN.
2. NOT ALL SECTIONS NOR DETAILS ARE APPLIED TO THIS PHASE. CERTAIN INFORMATION WERE ISSUED PREVIOUSLY

DATUM NOTES

1. THE ELEVATION MARKERS ON THE ARCHITECTURAL, STRUCTURAL, MECHANICAL, PLUMBING, AND ELECTRICAL DRAWINGS ARE 3'-0" LOWER THAN THE SURVEY (UNIVERSITY BENCHMARK). DO NOT USE THESE MARKERS OUTSIDE OF THE BUILDING ENVELOPE.
2. THE CIVIL DRAWINGS ARE INLINE WITH THE CURRENT UNIVERSITY BENCHMARK.

FFKR ARCHITECTS
730 Pacific Avenue · Salt Lake City, Utah 84104
O 801.521.6186 · **FFKR.COM**

U OF U BLDG. 303 SEISMIC UPGRADE PROJECT #22508 - PHASE 4 VE

SALT LAKE CITY UTAH

CONSTRUCTION SET - 10-10-2022

STATE OF UTAH · JACKSON FERGUSON, AIA · #12306427-5301 · LICENSED ARCHITECT · 10.10.22

△	DATE	REVISION
2	5-3-21	Phase 3 PR #4
10	Date 10	Prev phase

PROJECT NUMBER 18136

DEMO DETAILS

AD-501

10/10/2022 2:01:51 PM

A2

OPERATING LEVEL FLOOR PLAN (4742'-0")

SCALE: 1/8" = 1'-0"

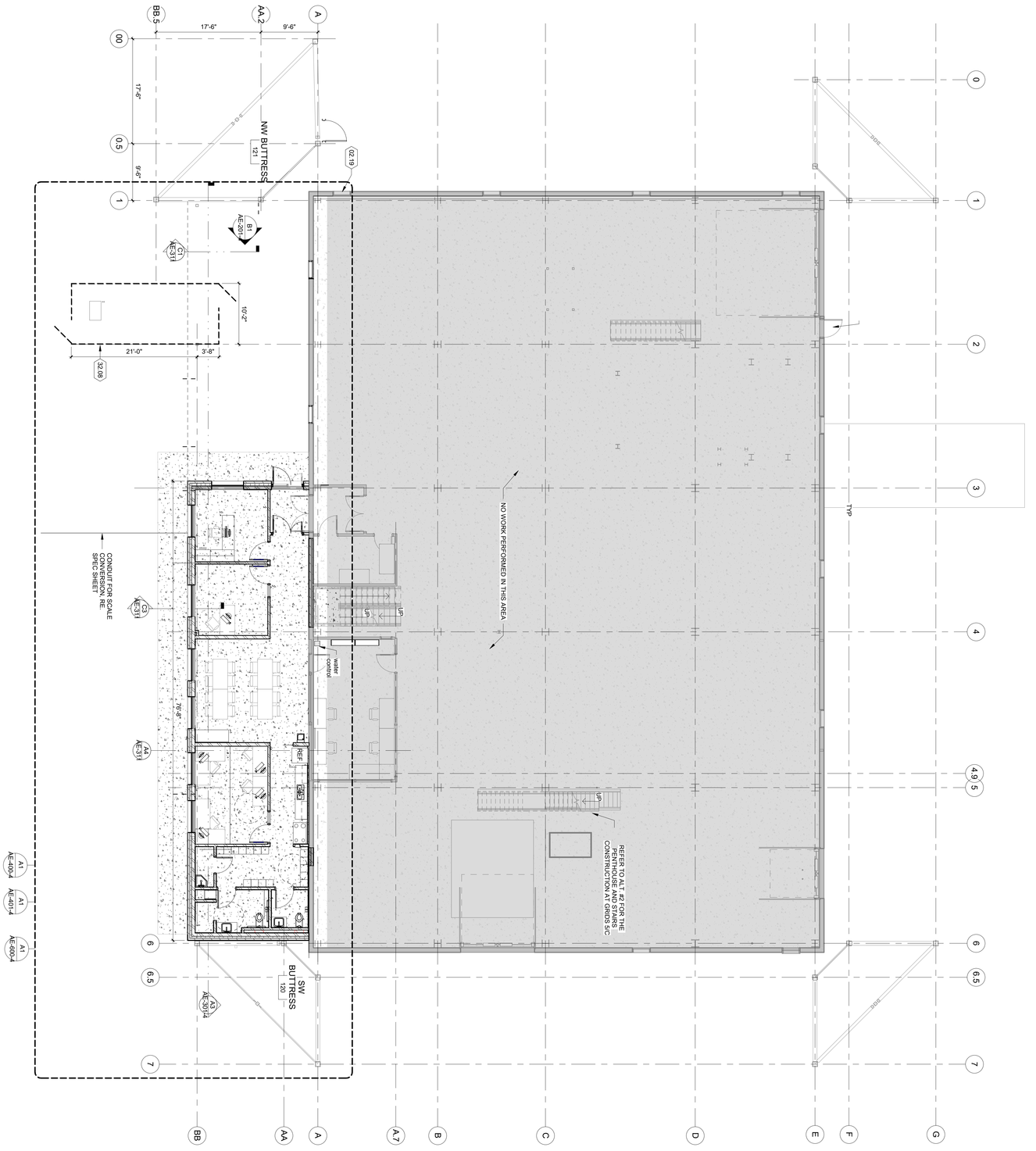

REFERENCE NOTES

02.19 EXISTING WINDOW TO REMAIN

32.08 GAS YARD ENCLOSURE WITH PREPAINTED 8' METAL PRIVACY SLATS WITH DOUBLE GATES, AND OVERHEAD LOCK STYLE AND DESIGN SIMILAR TO EXISTING METAL FENCE

U OF U BLDG. 303 SEISMIC UPGRADE PROJECT #22508 - PHASE 4 VE

SALT LAKE CITY UTAH

CONSTRUCTION SET - 10-10-2022

△	DATE	REVISION
6	3-30-22	Phase 4 RC #1
9	5-17-22	Ph. 4 Add #1

PROJECT NUMBER 18136

OPERATING LEVEL FLOOR PLAN PHASE 4

AE-101-4

FFKR ARCHITECTS
730 Pacific Avenue · Salt Lake City, Utah 84104
O 801.521.6186 · FFKR.COM

A2

PIPING LEVEL FLOOR PLAN - PHASE 4

SCALE: 1/8" = 1'-0"

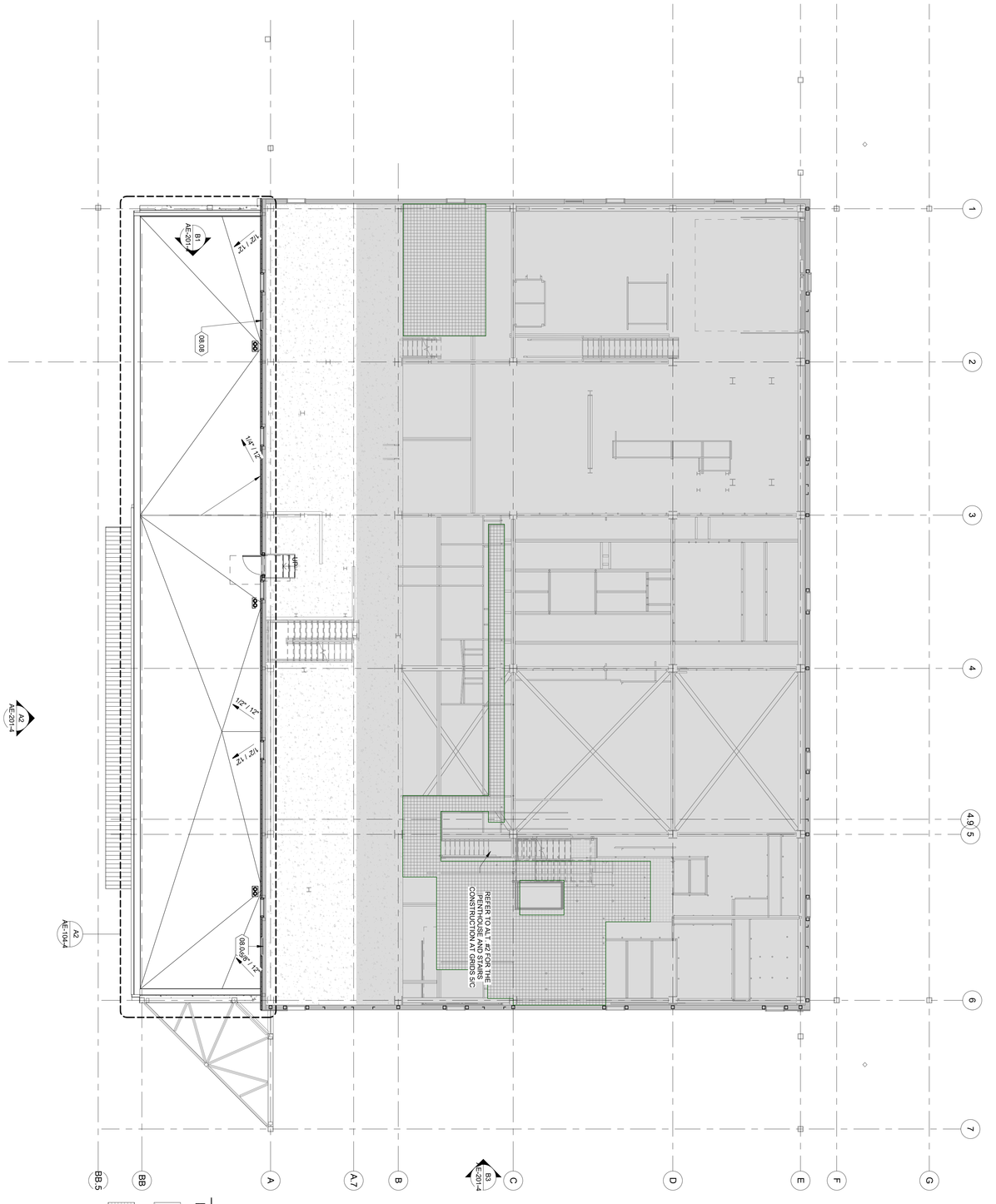

PHASE 4 FLOOR LEGEND

FLOOR GRATE

CONCRETE FLOOR

REFERENCE NOTES

08.08 MECHANICAL OPERABLE LOUVER

U OF U BLDG. 303 SEISMIC UPGRADE PROJECT #22508 - PHASE 4 VE

SALT LAKE CITY UTAH

CONSTRUCTION SET - 10-10-2022

PIPING LEVEL FLOOR PLAN PHASE 4

AE-102-4

PROJECT NUMBER 18136

	DATE	REVISION
9	5-17-22	Ph. 4 Add #1

FFKR ARCHITECTS
730 Pacific Avenue · Salt Lake City, Utah 84104
O 801.521.6186 · FFKR.COM

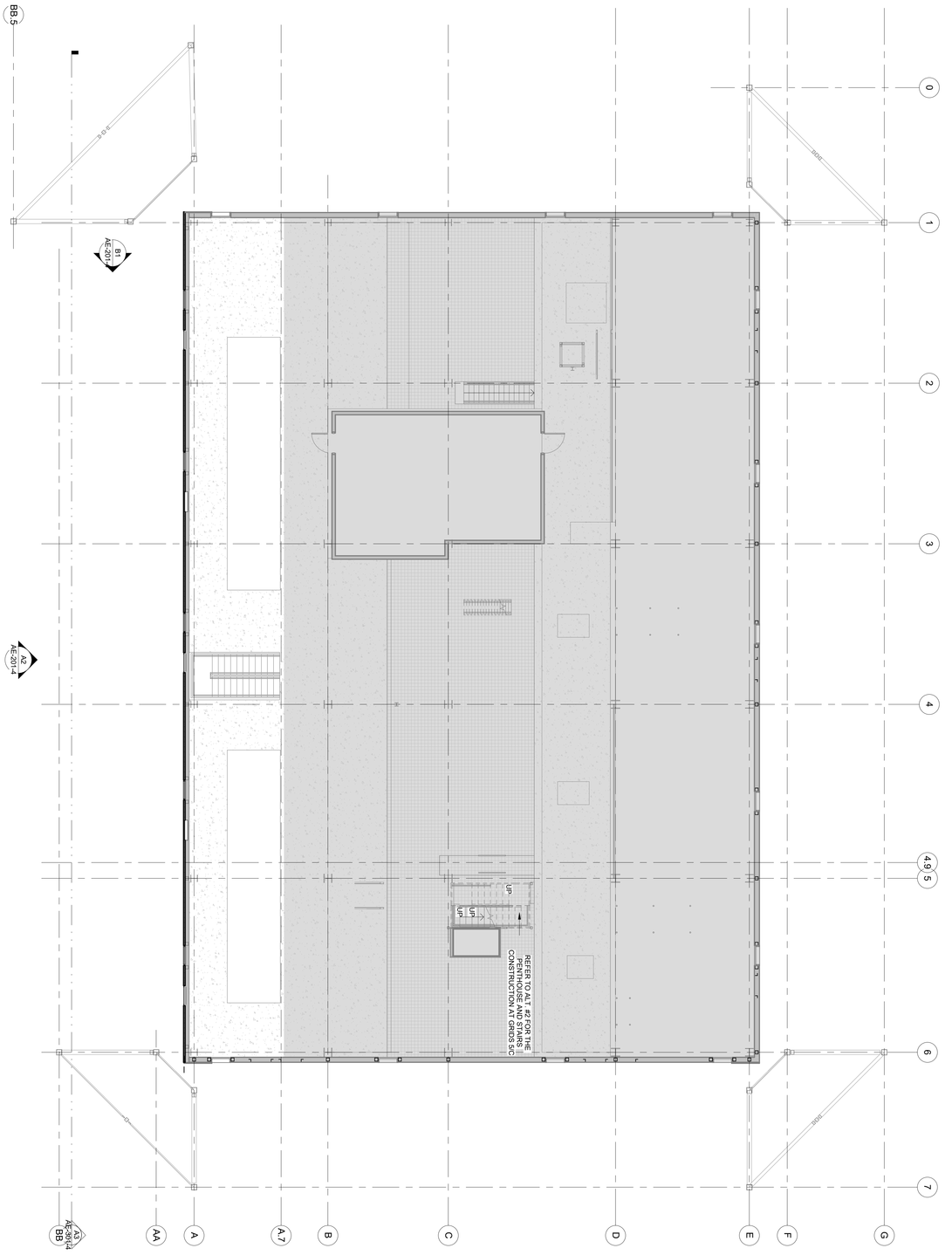

A2

FAN LEVEL FLOOR PLAN (EL. 4772'-0")

SCALE: 1/8" = 1'-0"

PHASE 4 FLOOR LEGEND

FLOOR GRATE

CONCRETE FLOOR

REFERENCE NOTES

U OF U BLDG. 303 SEISMIC UPGRADE PROJECT #22508 - PHASE 4 VE

SALT LAKE CITY UTAH

CONSTRUCTION SET - 10-10-2022

FFKR ARCHITECTS
730 Pacific Avenue · Salt Lake City, Utah 84104
O 801.521.6186 · FFKR.COM

PROJECT NUMBER 18136

FAN LEVEL FLOOR PLAN PHASE 4

AE-103-4

	DATE	REVISION
9	5-17-22	Ph. 4 Add #1

A2
ROOF PLAN (EL. VARIES) - PHASE 4
SCALE: 1/8" = 1'-0"

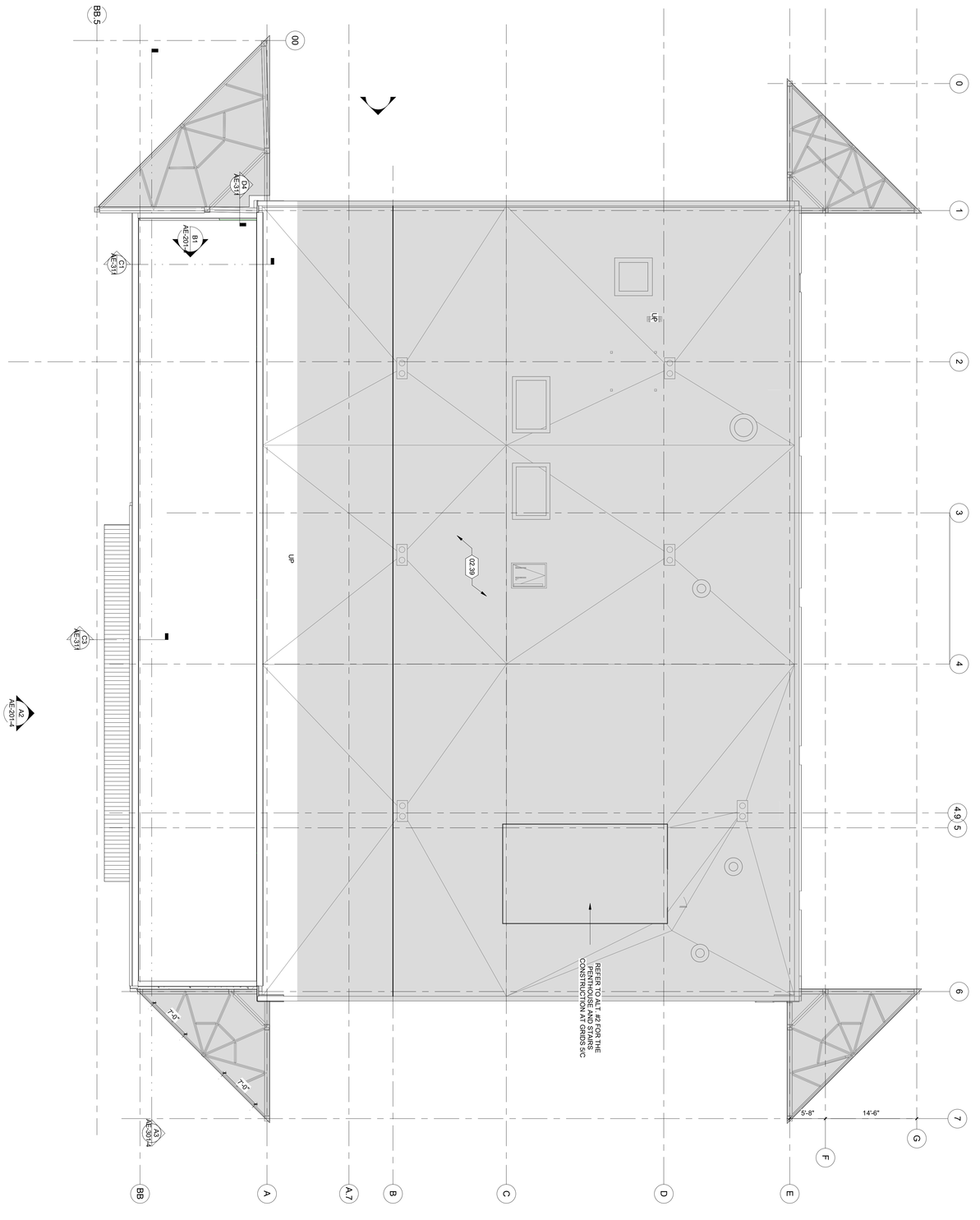

REFERENCE NOTES
02.39 NO WORK PERFORMED IN THIS AREA

U OF U BLDG. 303 SEISMIC UPGRADE PROJECT #22508 - PHASE 4 1VE
SALT LAKE CITY UTAH

CONSTRUCTION SET - 10-10-2022

FFKR ARCHITECTS
730 Pacific Avenue · Salt Lake City, Utah 84104
O 801.521.6186 · FFKR.COM

ROOF PLAN PHASE 4

PROJECT NUMBER 18136

△ 9 DATE 5-17-22 REVISION Ph. 4 Add #1

AE-104-4

REFERENCE NOTES

02.39 NO WORK PERFORMED IN THIS AREA

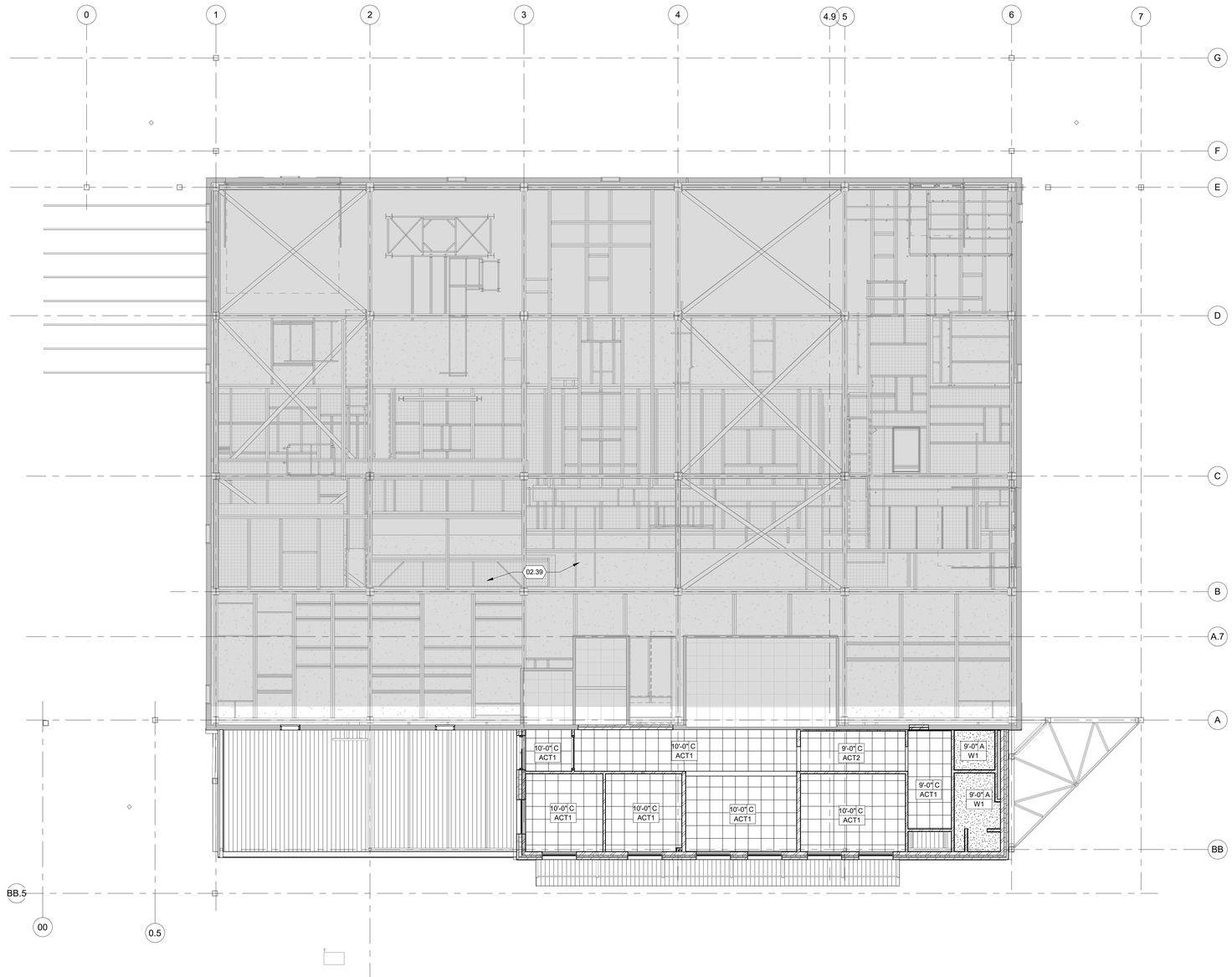

A2 OPERATING LEVEL REFLECTED CEILING PLAN

SCALE: 1/8" = 1'-0"

CEILING LEGEND

HEIGHT ABOVE FINISHED FLOOR — ROOM NAME: RM NO. / HT / C / PNT

C = CEILING TYPE
PNT = CEILING FINISH

GYPSUM CEILING

2' X 2' ACOUSTICAL CEILING PANEL

LIGHT FIXTURES

MECHANICAL FIXTURES

FIRE SPRINKLERS +

CEILING TYPE

A GYPSUM BOARD - SUSPENDED
B GYPSUM BOARD - FRAMED
C 2' X 2' ACOUSTICAL CEILING PANEL
D OPEN TO STRUCTURE

FFKR ARCHITECTS
730 Pacific Avenue · Salt Lake City, Utah 84104
O 801.521.6186 · FFKR.COM

U OF U BLDG. 303 SEISMIC UPGRADE PROJECT #22508 - PHASE 4 VE

SALT LAKE CITY UTAH

CONSTRUCTION SET - 10-10-2022

STATE OF UTAH
JACKSON FERGUSON, AIA
#5340047-0301
LICENSED ARCHITECT
10.10.22

△	DATE	REVISION
9	5-17-22	Ph. 4 Add #1

PROJECT NUMBER 18136

OPERATING LEVEL RCP PHASE 4

AE-111-4

10/10/2022 2:01:58 PM

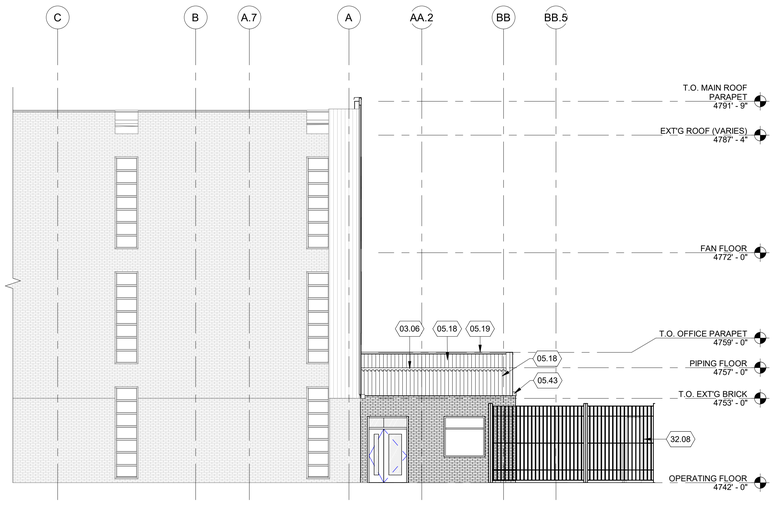

B1 NORTH ELEVATION
SCALE: 1/8" = 1'-0"

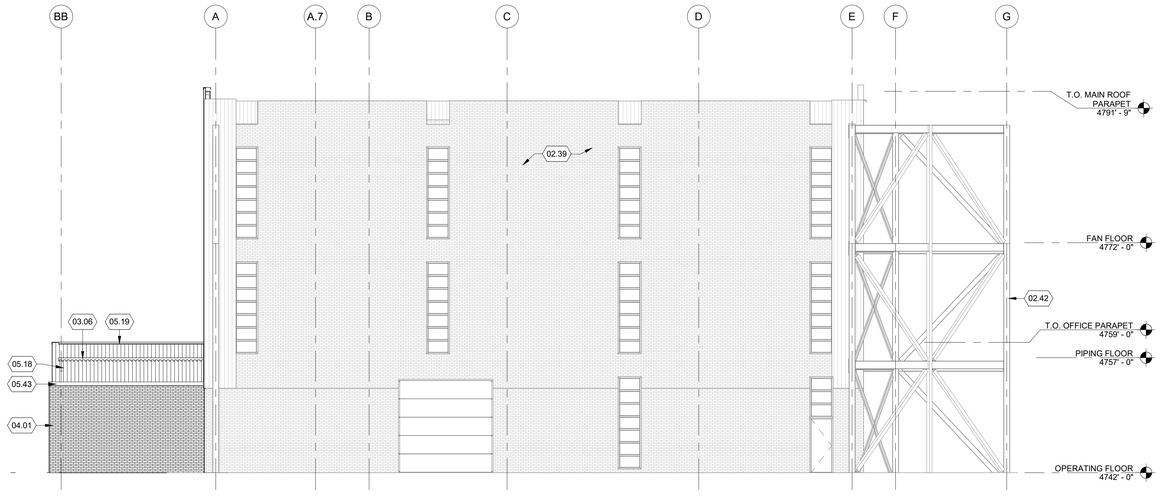

B3 SOUTH ELEVATION
SCALE: 1/8" = 1'-0"

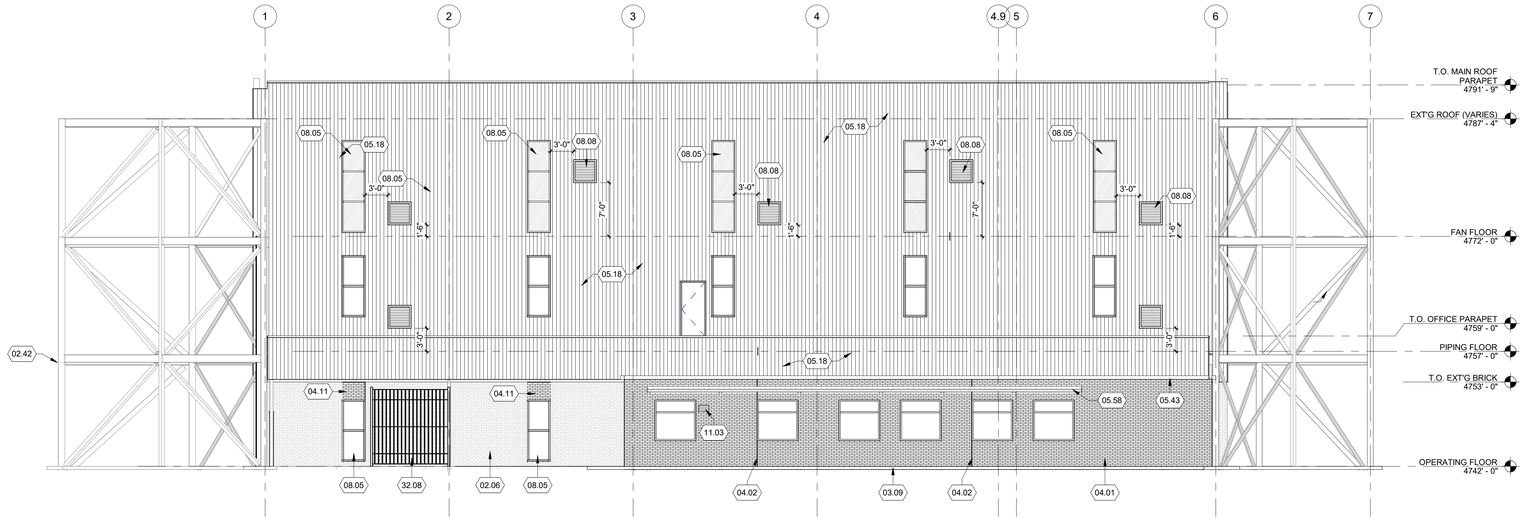

A2 WEST ELEVATION
SCALE: 1/8" = 1'-0"

GLAZING CALCULATION:
PLANT (WEST WALL): 270 SF / 4,000 SF = 6.7%
OFFICE BUILDING: 410 SF / (2,050 + 300 + 300) SF = 15.4%

REFERENCE NOTES

02.06	EXISTING MASONRY WALL TO REMAIN TO 11'-0" A.F.F.
02.39	NO WORK PERFORMED IN THIS AREA
02.42	PROTECT EXPOSED STRUCTURE
03.06	CONCRETE SLAB ON METAL DECK, RE. STRU. DWG.
03.09	CONCRETE SIDEWALK, RE. CIVIL DWG.
04.01	STANDARD BRICK - 3/8" JOINT
04.02	BRICK VENEER CONTROL JOINT
04.11	PATCH & REPAIR WITH SALVAGED BRICK
05.18	3" INSULATED METAL PANEL (R25) TO SPAN VERTICALLY, ATTACH TO STEEL FRAME OR METAL STUDS, ALSO RE. STRU. DWG.
05.19	PREPAINTED METAL CAP/FLASHING, CAULK AS REQ'D
05.43	POWDER COATED ALUMINUM TRIM
05.58	PAINTED METAL CANOPY
08.05	WINDOW, RE WINDOW SCHEDULE
08.08	MECHANICAL OPERABLE LOUVER
11.03	Digital scale display
32.08	GAS YARD ENCLOSURE WITH PREPAINTED 8' METAL PICKET FENCE, (2) 4' WIDE LOCKABLE GATES, AND OVERHEAD CAGE, STYLE AND DESIGN SIMILAR TO EXISTING METAL FENCE

GLAZING SCHEDULE

G-1 — GLAZING TYPE

G-1	FLOAT GLASS
G-1T	FLOAT GLASS - TEMPERED
G-2	INSULATED GLASS U-VALUE 0.22, SHGC 0.39
G-2T	INSULATED GLASS - TEMPERED U-VALUE 0.22, SHGC 0.39
G-3	LAMINATED SOUND GLASS
G-3T	LAMINATED SOUND GLASS - TEMPERED

ALL INSULATED GLASS TO BE SOLARBAN 60 W/ A U-FACTOR OF 0.22 AND SHGC 0.39 OR BETTER

PHASE 4 NOTES

1. NO FURRING NOR TILE BEHIND THE LOWER MILLWORK AT THE EXISTING WALL @ WARMING KITCHEN.
2. NOT ALL SECTIONS NOR DETAILS ARE APPLIED TO THIS PHASE, CERTAIN INFORMATION WERE ISSUED PREVIOUSLY

DATUM NOTES

1. THE ELEVATION MARKERS ON THE ARCHITECTURAL, STRUCTURAL, MECHANICAL, PLUMBING, AND ELECTRICAL DRAWINGS ARE 3'-0" LOWER THAN THE SURVEY (UNIVERSITY BENCHMARK). DO NOT USE THESE MARKERS OUTSIDE OF THE BUILDING ENVELOPE.
2. THE CIVIL DRAWINGS ARE INLINE WITH THE CURRENT UNIVERSITY BENCHMARK.

FFKR ARCHITECTS
730 Pacific Avenue · Salt Lake City, Utah 84104
O 801.521.6186 · FFKR.COM

U OF U BLDG. 303 SEISMIC UPGRADE PROJECT #22508 - PHASE 4 VE

SALT LAKE CITY UTAH

CONSTRUCTION SET - 10-10-2022

STATE OF UTAH · JACKSON FERGUSON AIA · #334042-2301 · LICENSED ARCHITECT · 10.10.22

	DATE	REVISION
6	3-30-22	Phase 4 RC #1
8	4-15-22	Phase 4 RC #2

PROJECT NUMBER 18136

EXTERIOR ELEVATIONS PHASE 4

AE-201-4

10/10/2022 2:01:59 PM

A3 BUILDING SECTION
SCALE: 1/8" = 1'-0"

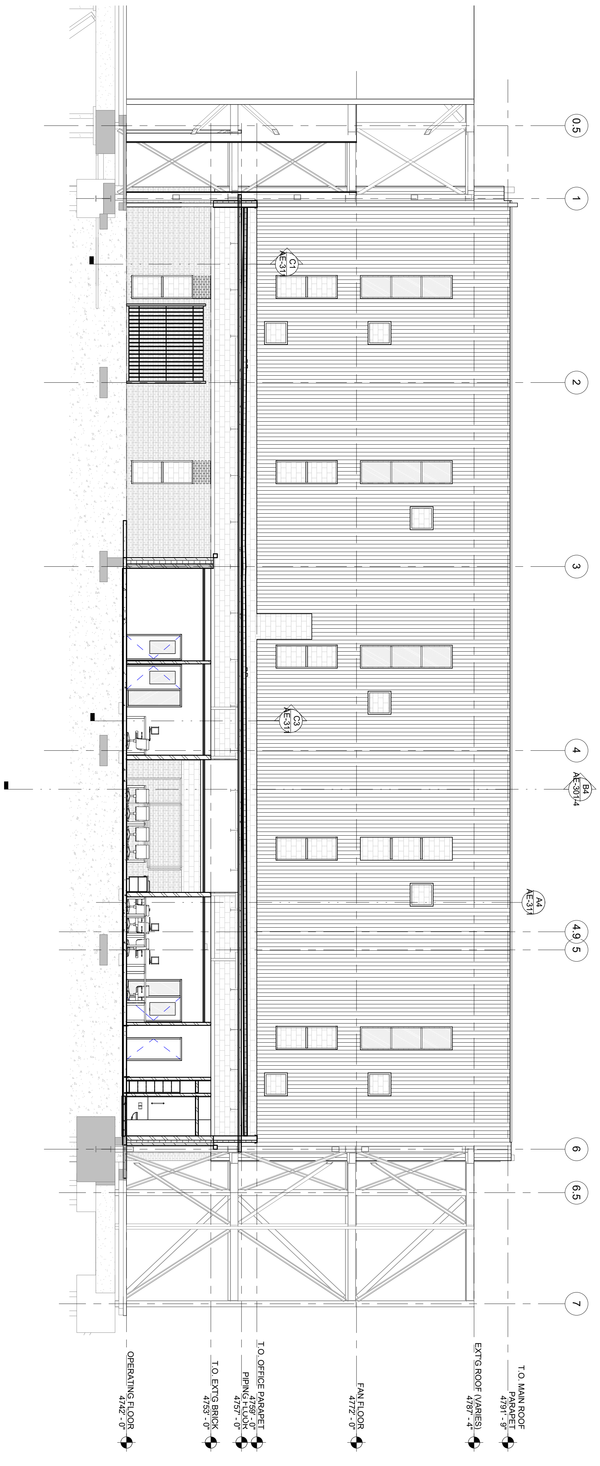

B4 BUILDING SECTION
SCALE: 1/8" = 1'-0"

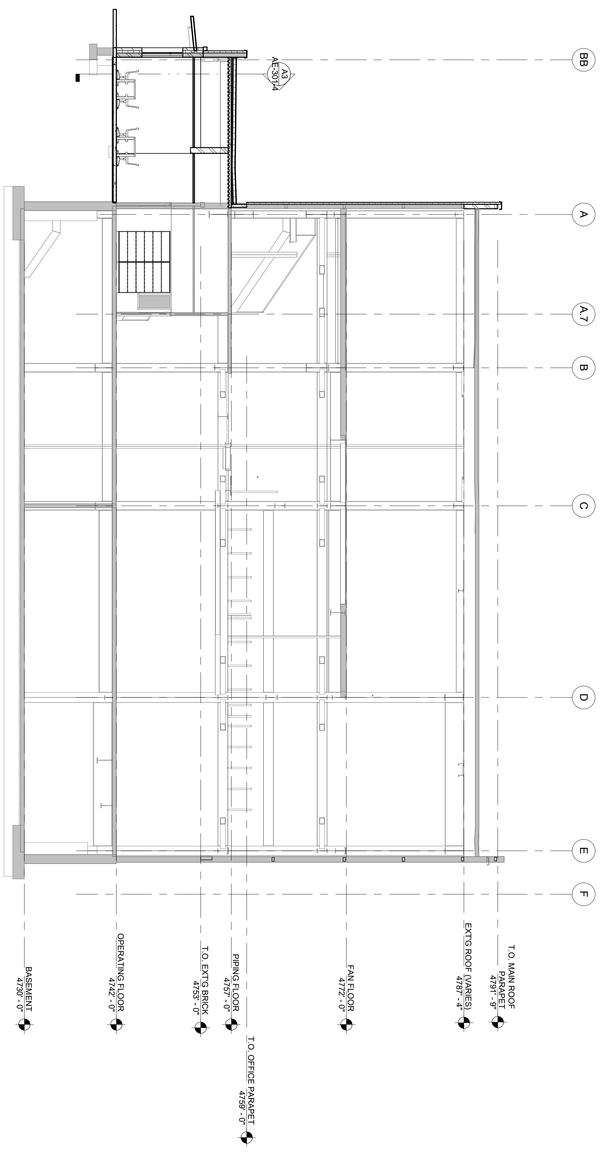

REFERENCE NOTES

U OF U BLDG. 303 SEISMIC UPGRADE
SALT LAKE CITY UTAH

CONSTRUCTION SET - 10-10-2022

VE

FFKR ARCHITECTS
730 Pacific Avenue · Salt Lake City, Utah 84104
O 801.521.6186 · FFKR.COM

BUILDING SECTIONS PHASE 4

PROJECT NUMBER 18136

△ DATE REVISION

AE-301-4

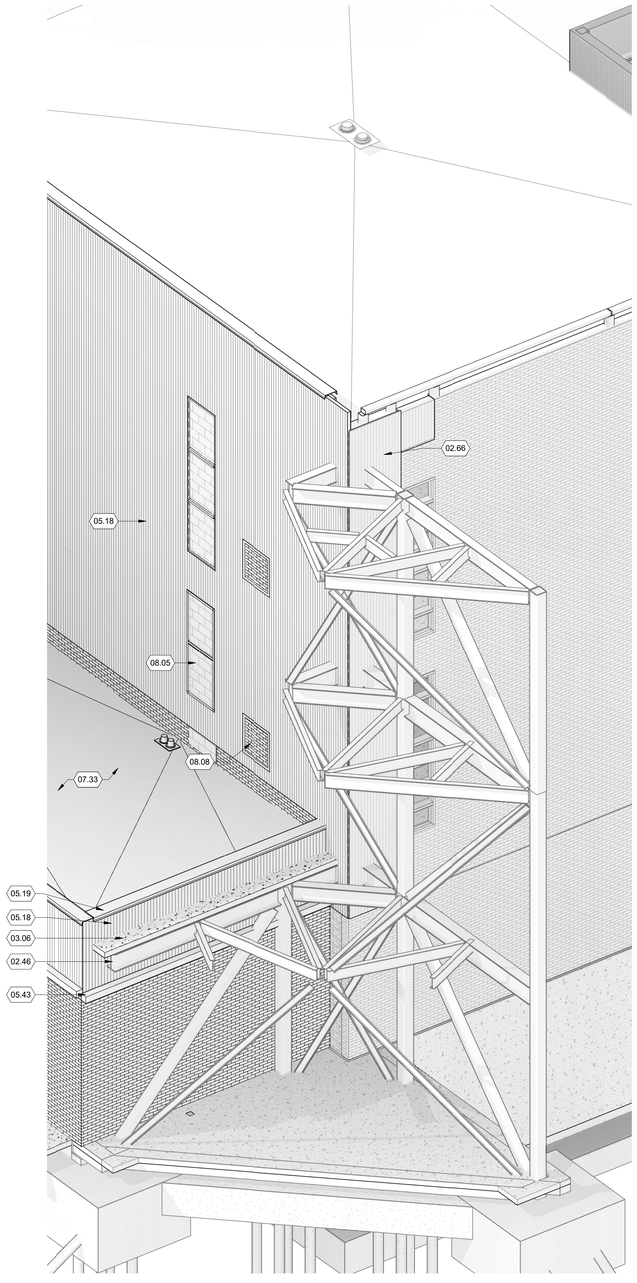

A2 3D CORNER VIEW -PHASE 4

SCALE:

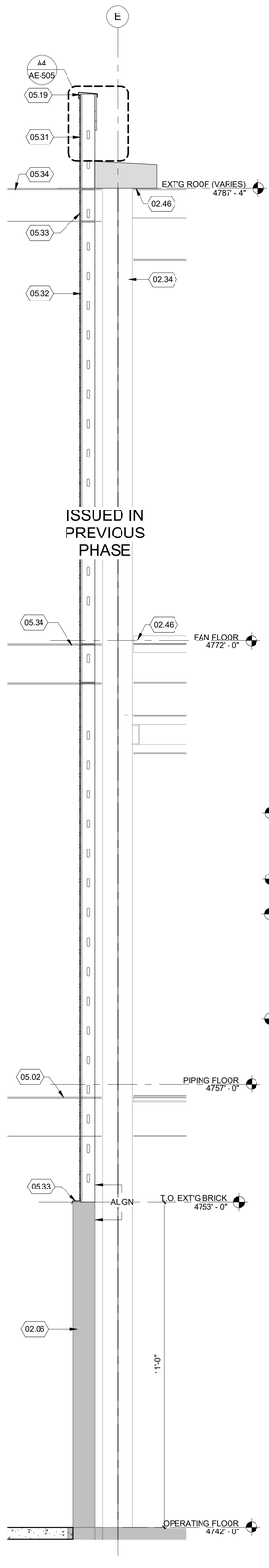

ISSUED IN PHASE 3, NOT USED IN PHASE 4

A3 WALL SECTION @ CORNERS

SCALE: 1/2" = 1'-0"

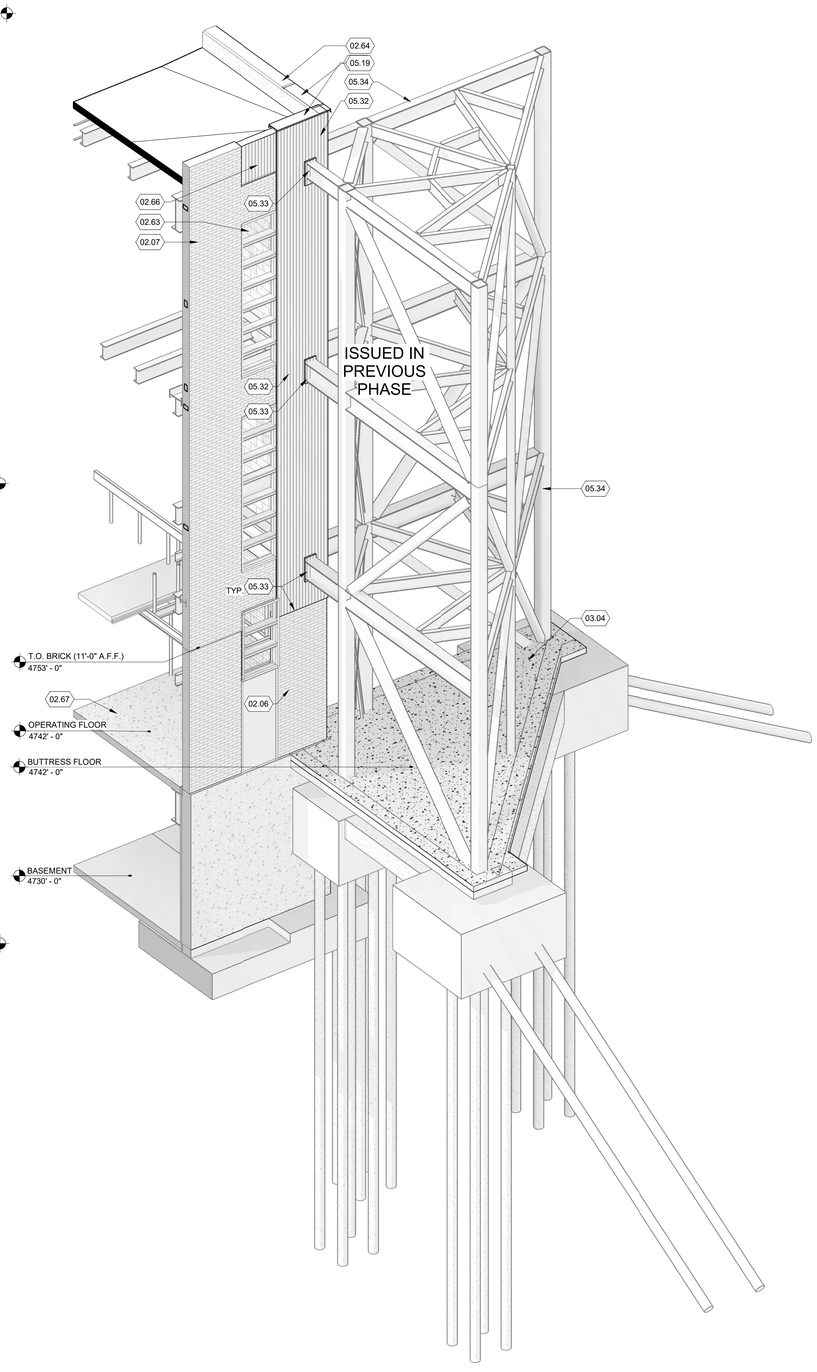

ISSUED IN PHASE 3, NOT USED IN PHASE 4

A5 3D CORNER VIEW

SCALE:

REFERENCE NOTES

02.06 EXISTING MASONRY WALL TO REMAIN TO 11'-0" A.F.F.
02.07 EXISTING MASONRY WALL TO REMAIN
02.34 EXISTING COLUMN TO REMAIN
02.46 EXISTING STRUCTURE TO REMAIN
02.63 BRACE EXISTING WINDOW TO STRUCTURE AS REQ'D
02.64 EXISTING PARAPET CAP
02.66 EXISTING METAL PANEL WALL
02.67 EXISTING CONCRETE FLOOR/SLAB OR ASPHALT PAVING TO REMAIN
03.04 CONCRETE SLAB ON GRADE
03.06 CONCRETE SLAB ON METAL DECK, RE. STRU. DWG.
05.02 STRUCTURAL BEAM, PRIMED; PAINTED IF EXPOSED
05.18 3" INSULATED METAL PANEL (R25) TO SPAN VERTICALLY, ATTACH TO STEEL FRAME OR METAL STUDS, ALSO RE. STRU. DWG.
05.19 PREPAINTED METAL CAP/FLASHING, CAULK AS REQ'D
05.31 METAL STUD WALL WITH 1" PREPAINTED METAL PANEL (COLOR TO MATCH EXISTING) & VAPOR RETARDER ON THE OUTSIDE, AND 5/8" EXTERIOR GYPSUM SHEATHING & SINGLE PLY ROOFING MEMBER ON THE INSIDE AT ROOF/PARAPET LEVEL
05.32 24 GAUGE PREPAINTED METAL PANEL (COLOR TO MATCH EXISTING) WITH EXPOSED FASTENER, CAULKING AND CLOSURE ANGLE AT ALL EDGES
05.33 SHEET METAL FLASHING AND TRIM, COLOR TO MATCH ADJACENT SURFACE, CAULKING AND CLOSURE ANGLE AT ALL EDGES
05.34 EXTERNAL STEEL BUTTRESS SYSTEM, SHOP PRIMED
05.43 POWDER COATED ALUMINUM TRIM
07.33 ROOF ASSEMBLY, RE. TYP. ROOF DETAIL E4/AE-506
08.05 WINDOW, RE WINDOW SCHEDULE
08.08 MECHANICAL OPERABLE LOUVER

BUILDING ENVELOPE NOTES

1. VAPOR RETARDER, TO SPAN CONTINUOUSLY BELOW NEW CONCRETE SLAB ON GRADE, ABOVE METAL ROOF DECK, AND ON THE INSIDE OF METAL STUD WALL, TAPE AT ALL EXPOSED JOINTS.
2. FLUID APPLIED AIR BARRIER TO BE APPLIED ON ALL SOLID VERTICAL WALL SUBSTRATES.
3. VAPOR BARRIER TO BE APPLIED ON WALLS WHERE THERE IS NOT A SOLID SUBSTRATE; CONTINUOUS, TAPE AT ALL JOINTS.

PHASE 4 NOTES

1. NO FURRING NOR TILE BEHIND THE LOWER MILLWORK AT THE EXISTING WALL @ WARMING KITCHEN.
2. NOT ALL SECTIONS NOR DETAILS ARE APPLIED TO THIS PHASE. CERTAIN INFORMATION WERE ISSUED PREVIOUSLY

DATUM NOTES

1. THE ELEVATION MARKERS ON THE ARCHITECTURAL, STRUCTURAL, MECHANICAL, PLUMBING, AND ELECTRICAL DRAWINGS ARE 3'-0" LOWER THAN THE SURVEY (UNIVERSITY BENCHMARK). DO NOT USE THESE MARKERS OUTSIDE OF THE BUILDING ENVELOPE.
2. THE CIVIL DRAWINGS ARE INLINE WITH THE CURRENT UNIVERSITY BENCHMARK.

FFKR ARCHITECTS
730 Pacific Avenue · Salt Lake City, Utah 84104
O 801.521.6186 · FFKR.COM

U OF U BLDG. 303 SEISMIC UPGRADE PROJECT #22508 - PHASE 4 VE

SALT LAKE CITY UTAH

CONSTRUCTION SET - 10-10-2022

STATE OF UTAH
JACKSON FERGUSON, AIA
#534047-2301
LICENSED ARCHITECT
10.10.22

△	DATE	REVISION
1	1-21-21	Add #4/Checker Comments
10	Date 10	Prev phase

PROJECT NUMBER 18136

WALL SECTIONS

AE-310

10/10/2022 2:02:12 PM

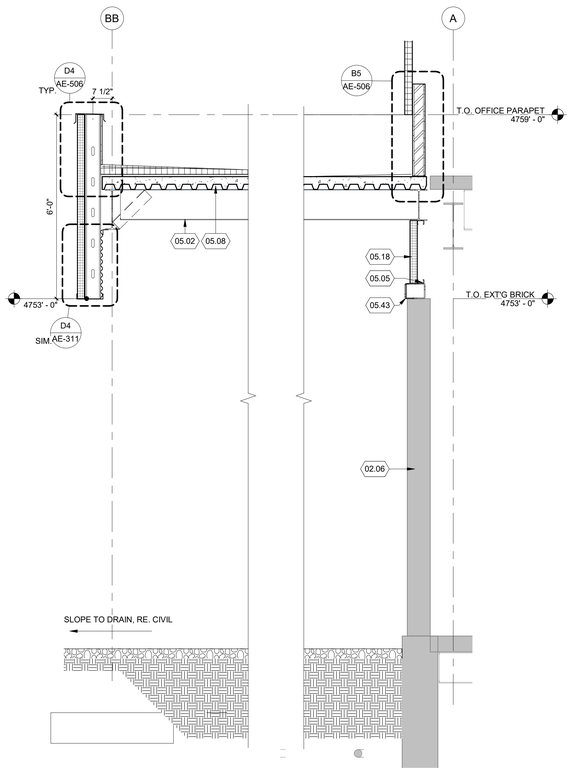

C1 WALL SECTION @ GRID BB

SCALE: 1/2" = 1'-0"

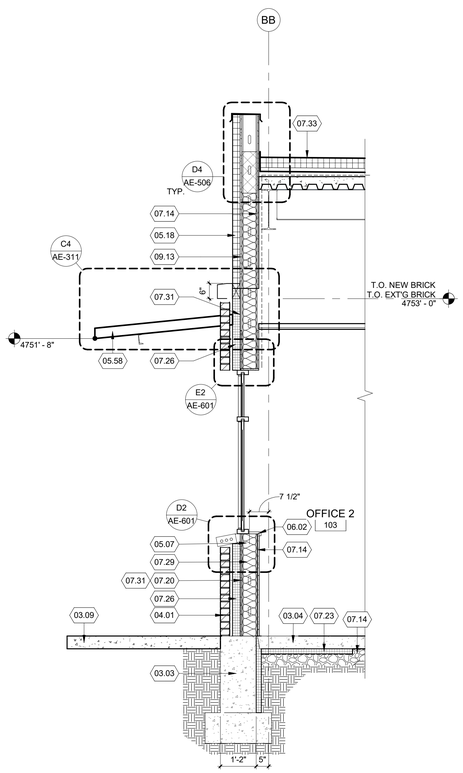

C3 WALL SECTION @ GRID BB

SCALE: 1/2" = 1'-0"

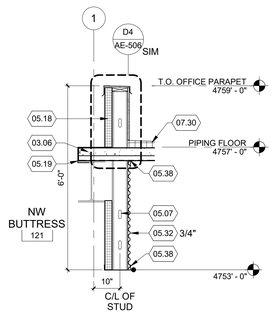

D4 WALL SECTION @ GRID 1

SCALE: 1/2" = 1'-0"

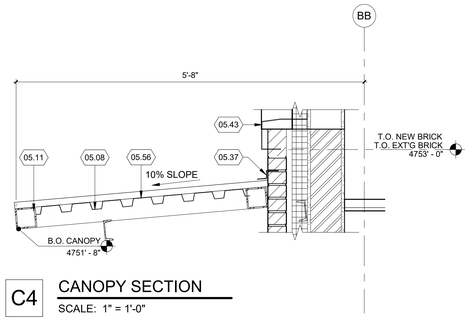

C4 CANOPY SECTION

SCALE: 1" = 1'-0"

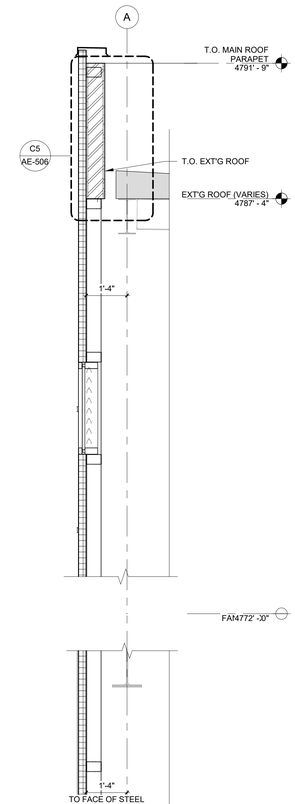

REFERENCE NOTES

02.06	EXISTING MASONRY WALL TO REMAIN TO 11'-0" A.F.F.
02.33	EXISTING WALL TO REMAIN
02.67	EXISTING CONCRETE FLOOR/SLAB OR ASPHALT PAVING TO REMAIN
03.03	CONCRETE FOOTING AND FOUNDATION
03.04	CONCRETE SLAB ON GRADE
03.06	CONCRETE SLAB ON METAL DECK, RE. STRU. DWG.
03.09	CONCRETE SIDEWALK, RE. CIVIL DWG.
04.01	STANDARD BRICK - 3/8" JOINT
05.02	STRUCTURAL BEAM, PRIMED; PAINTED IF EXPOSED
05.05	2 1/2" METAL STUD
05.06	3 5/8" METAL STUD
05.07	6" METAL STUD
05.08	METAL ROOF DECKING, PAINTED IF EXPOSED
05.09	STEEL TUBE, PRIMED & PAINTED
05.11	PAINTED STEEL FRAME, RE. STRU. DWG
05.18	3" INSULATED METAL PANEL (R25) TO SPAN VERTICALLY, ATTACH TO STEEL FRAME OR METAL STUDS, ALSO RE. STRU. DWG.
05.19	PREPAINTED METAL CAP/FLASHING, CAULK AS REQ'D
05.32	24 GAUGE PREPAINTED METAL PANEL (COLOR TO MATCH EXISTING) WITH EXPOSED FASTENER, CAULKING AND CLOSURE ANGLE AT ALL EDGES
05.36	PAINTED METAL DRIP EDGE, FULLY ADHERED AT ALL HORIZONTAL ROOF SURFACE, MECHANICALLY FASTEN OTHERWISE
05.37	GALVANIZED RIGLET, FLASHING, ETC., CAULK, TYP.
05.38	PAINTED METAL PANEL CLOSURE TRIM, COLOR TO MATCH, TYP AT ALL CONNECTION POINTS
05.43	POWDER COATED ALUMINUM TRIM
05.56	PRE-PAINTED STANDING SEAM METAL ROOF, CONCEALED FASTENER
05.57	ALUMINUM THRESHOLD
05.58	PAINTED METAL CANOPY
06.02	SOILD SURFACE COUNTERTOP
07.13	SINGLE PLY ROOFING, MIN. 6" OVERLAP AT JOINTS
07.14	VAPOR RETARDER, TO SPAN CONTINUOUSLY BELOW NEW CONCRETE SLAB ON GRADE, ABOVE METAL ROOF DECK, AND ON THE INSIDE OF METAL STUD WALL, TAPE AT ALL EXPOSED JOINTS
07.20	1/2" EXTERIOR GLASS MAT SHEATHING
07.23	2" RIGID INSULATION, MIN. R12
07.26	3" (MIN. R18) RIGID INSULATION, UNO
07.29	BATT INSULATION, MIN. R3 PER 1 INCH
07.30	RIGID ROOF INSULATION, 1/4" PER FOOT SLOPE
07.31	FLUID APPLIED AIR BARRIER
07.33	ROOF ASSEMBLY, RE. TYP. ROOF DETAIL E4/AE-506
07.37	THERMAL BREAK
08.03	DOOR. RE DOOR SCHEDULE
09.01	5/8" TYPE 'X' GYPSUM BOARD, PAINT
09.02	SCHEDULED CEILING, RE. REFLECTIVE CEILING PLAN
09.13	5/8" EXTERIOR GYPSUM SHEATHING
09.20	SCHEDULED BASE
32.01	CONCRETE SIDEWALK

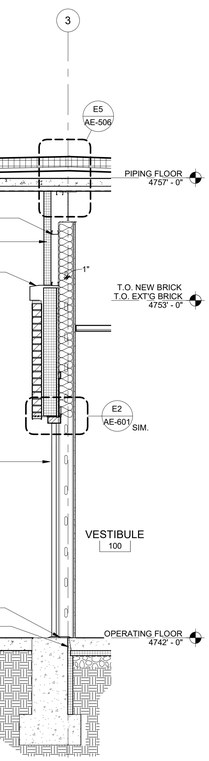

A1 WALL SECTION @ GRID 3

SCALE: 1/2" = 1'-0"

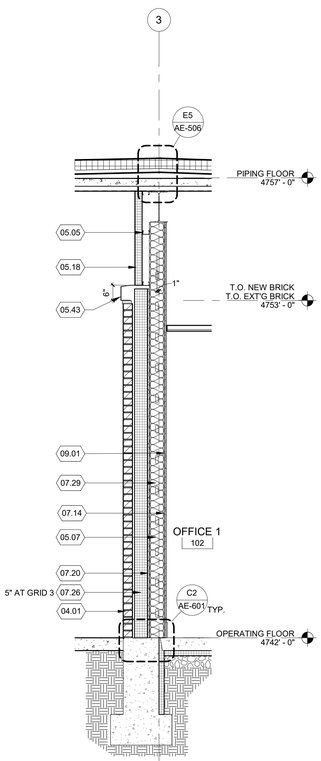

A2 WALL SECTION @ GRID 3

SCALE: 1/2" = 1'-0"

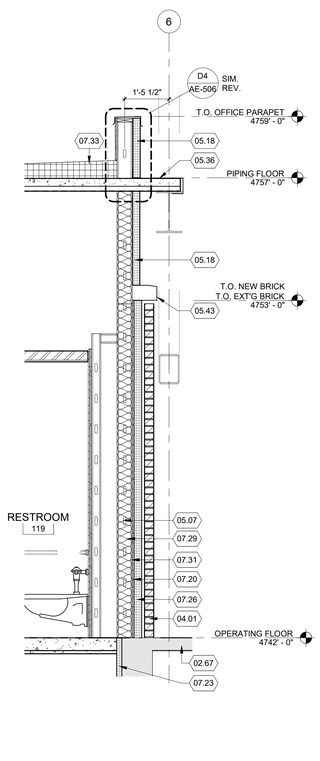

A3 WALL SECTION @ GRID 6

SCALE: 1/2" = 1'-0"

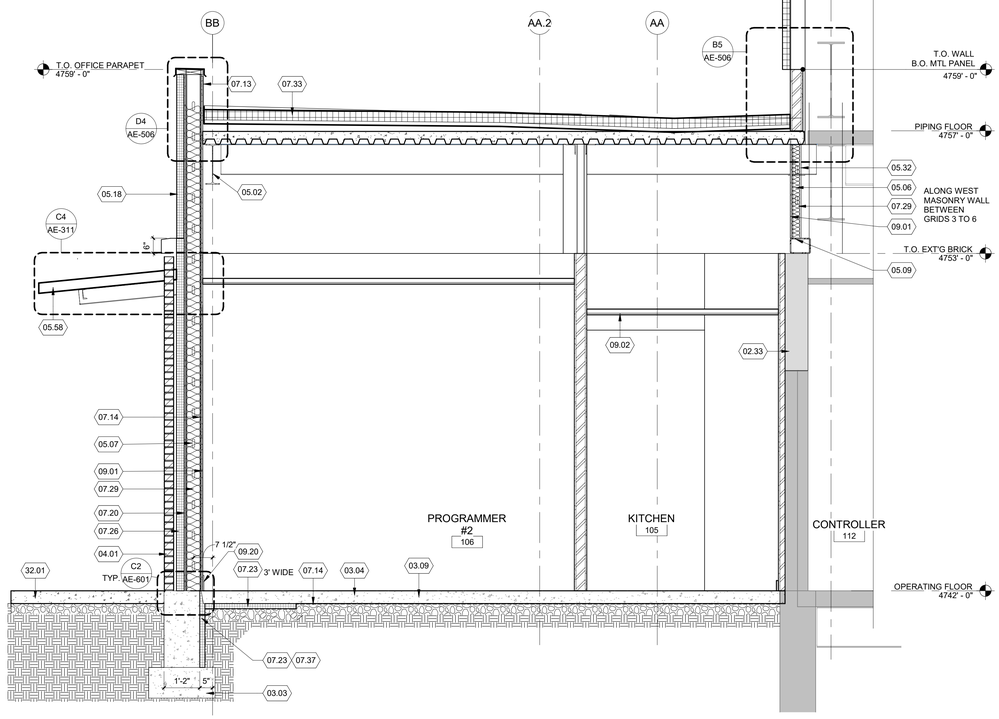

A4 OFFICE BLDG WALL SECTION

SCALE: 1/2" = 1'-0"

BUILDING ENVELOPE NOTES

1. VAPOR RETARDER, TO SPAN CONTINUOUSLY BELOW NEW CONCRETE SLAB ON GRADE, ABOVE METAL ROOF DECK, AND ON THE INSIDE OF METAL STUD WALL, TAPE AT ALL EXPOSED JOINTS.
2. FLUID APPLIED AIR BARRIER TO BE APPLIED ON ALL SOLID VERTICAL WALL SUBSTRATES.
3. VAPOR BARRIER TO BE APPLIED ON WALLS WHERE THERE IS NOT A SOLID SUBSTRATE; CONTINUOUS, TAPE AT ALL JOINTS.

PHASE 4 NOTES

1. NO FURRING NOR TILE BEHIND THE LOWER MILLWORK AT THE EXISTING WALL @ WARMING KITCHEN.
2. NOT ALL SECTIONS NOR DETAILS ARE APPLIED TO THIS PHASE. CERTAIN INFORMATION WERE ISSUED PREVIOUSLY

DATUM NOTES

1. THE ELEVATION MARKERS ON THE ARCHITECTURAL, STRUCTURAL, MECHANICAL, PLUMBING, AND ELECTRICAL DRAWINGS ARE 3'-0" LOWER THAN THE SURVEY (UNIVERSITY BENCHMARK). DO NOT USE THESE MARKERS OUTSIDE OF THE BUILDING ENVELOPE.
2. THE CIVIL DRAWINGS ARE INLINE WITH THE CURRENT UNIVERSITY BENCHMARK.

FFKR ARCHITECTS
730 Pacific Avenue · Salt Lake City, Utah 84104
O 801.521.6186 · FFKR.COM

U OF U BLDG. 303 SEISMIC UPGRADE PROJECT #22508 - PHASE 4 \'VE

SALT LAKE CITY UTAH

CONSTRUCTION SET - 10-10-2022

STATE OF UTAH
JACKSON FERGUSON, AIA
#534047-2001
LICENSED ARCHITECT
10.10.22

△	DATE	REVISION
8	4-15-22	Phase 4 RC #2

PROJECT NUMBER 18136

WALL SECTIONS

AE-311

10/10/2022 2:02:13 PM

REFERENCE NOTES

03.04 CONCRETE SLAB ON GRADE
07.37 THERMAL BREAK
22.06 PLUMBING DRAIN, RE. PLUMBING FOR SIZE AND OTHER SANITARY DRAIN LOCATIONS

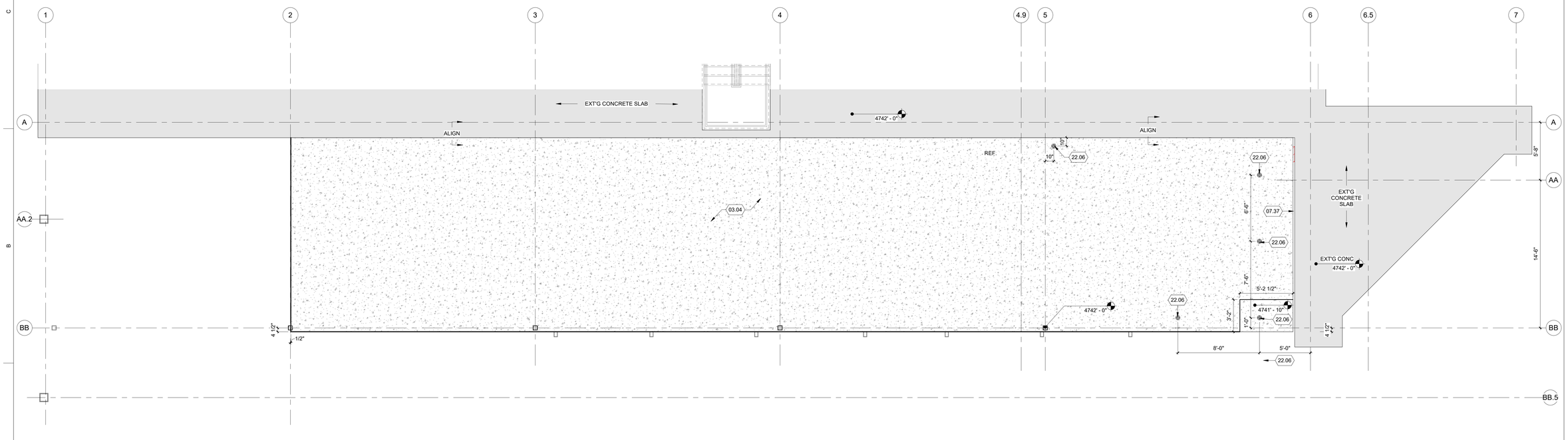

A1 ENLARGED OFFICE BUILDING SLAB PLAN
SCALE: 1/4" = 1'-0"

FFKR ARCHITECTS
730 Pacific Avenue · Salt Lake City, Utah 84104
O 801.521.6186 · FFKR.COM

U OF U BLDG. 303 SEISMIC UPGRADE PROJECT # 22508 - PHASE 4 VE
SALT LAKE CITY UTAH
CONSTRUCTION SET - 10-10-2022

STATE OF UTAH
JACKSON FERGUSON, AIA
#5340047-0301
LICENSED ARCHITECT
10.10.22

DATE REVISION

PROJECT NUMBER 18136

ENLARGED OFFICE BLDG. SLAB PLAN

AE-400-4

10/10/2022 2:02:13 PM

REFERENCE NOTES

05.01	STRUCTURAL COLUMN, PRIMED; PAINTED IF EXPOSED
07.36	1/2" EXPANSION JOINT, COLOR MATCHING SILICONE CAULK ON THE EXTERIOR, 1 1/2" X 1 1/2" STAINLESS STEEL EXPANSION JOINT COVER ON THE INTERIOR
10.12	15" WIDE 15" DEEP SINGLE TIER LOCKER ON 6" MANUFACTURED BASE
10.14	FREESTANDING RANGE, OWNER TO PROVIDE
10.15	COUNTER DEPTH REFRIGERATOR, PROVIDED BY GC
10.16	2" X 2" X 4' STAINLESS STEEL CORNER GUARD AT ALL OUTSIDE CORNERS, TYP.
21.01	SEMI RECESSED FIRE EXTINGUISHER CABINET
22.03	ELECTRIC DRINKING FOUNTAIN
32.08	GAS YARD ENCLOSURE WITH PREPAINTED 8' METAL PICKET FENCE, (2) 4' WIDE LOCKABLE GATES, AND OVERHEAD CAGE, STYLE AND DESIGN SIMILAR TO EXISTING METAL FENCE

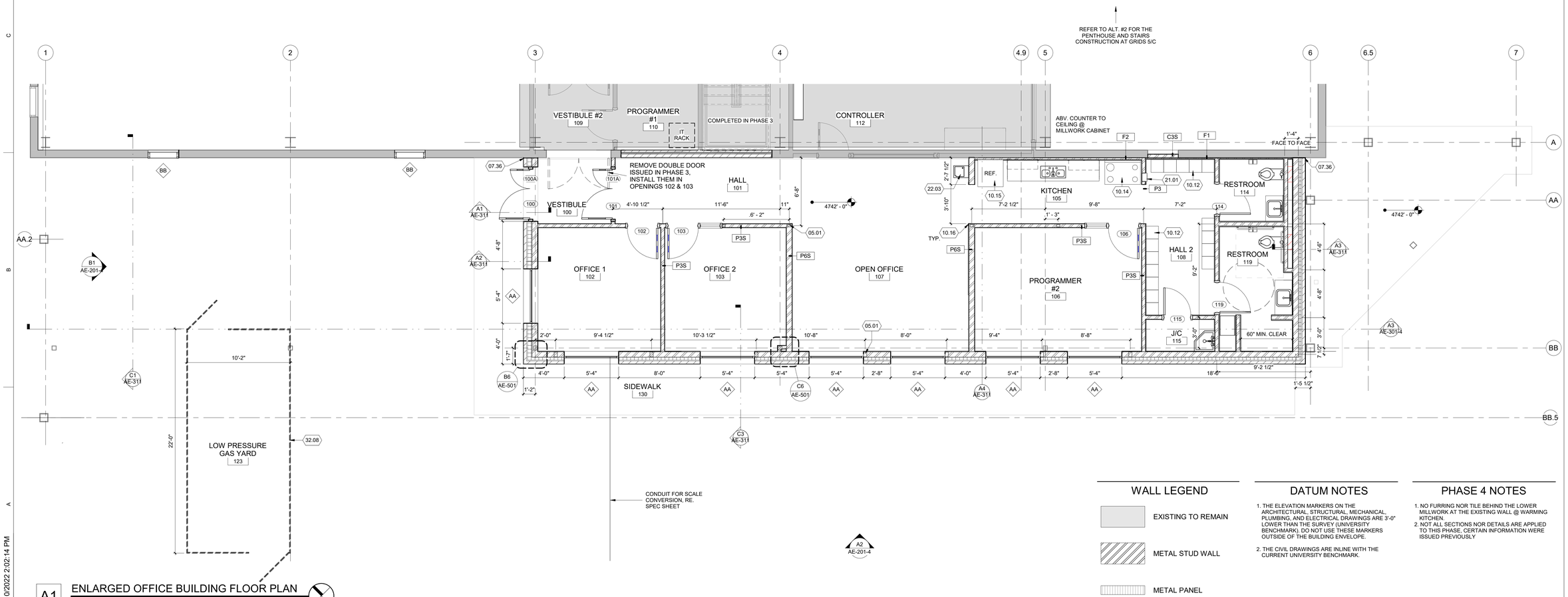

A1 ENLARGED OFFICE BUILDING FLOOR PLAN

SCALE: 1/4" = 1'-0"

WALL LEGEND

- EXISTING TO REMAIN
- METAL STUD WALL
- METAL PANEL

DATUM NOTES

1. THE ELEVATION MARKERS ON THE ARCHITECTURAL, STRUCTURAL, MECHANICAL, PLUMBING, AND ELECTRICAL DRAWINGS ARE 3'-0" LOWER THAN THE SURVEY (UNIVERSITY BENCHMARK). DO NOT USE THESE MARKERS OUTSIDE OF THE BUILDING ENVELOPE.
2. THE CIVIL DRAWINGS ARE INLINE WITH THE CURRENT UNIVERSITY BENCHMARK.

PHASE 4 NOTES

1. NO FURRING NOR TILE BEHIND THE LOWER MILLWORK AT THE EXISTING WALL @ WARMING KITCHEN.
2. NOT ALL SECTIONS NOR DETAILS ARE APPLIED TO THIS PHASE, CERTAIN INFORMATION WERE ISSUED PREVIOUSLY

FFKR ARCHITECTS
730 Pacific Avenue · Salt Lake City, Utah 84104
O 801.521.6186 · FFKR.COM

U OF U BLDG. 303 SEISMIC UPGRADE PROJECT #22508 - PHASE 4 'VE

SALT LAKE CITY UTAH

CONSTRUCTION SET - 10-10-2022

STATE OF UTAH
JACKSON FERGUSON, AIA
#534004-0301
LICENSED ARCHITECT
10.10.22

△	DATE	REVISION
6	3-30-22	Phase 4 RC #1
9	5-17-22	Ph. 4 Add #1

PROJECT NUMBER 18136

ENLARGED OFFICE BLDG. FLOOR PLAN

AE-401-4

10/10/2022 2:02:14 PM

REFERENCE NOTES

05.18	3" INSULATED METAL PANEL (R25) TO SPAN VERTICALLY, ATTACH TO STEEL FRAME OR METAL STUDS, ALSO RE. STRU. DWG.
05.56	PRE-PAINTED STANDING SEAM METAL ROOF, CONCEALED FASTENER
07.27	3' WIDE (UNO) SINGLE PLY WALKWAY PAD, FULLY ADHERED. VERIFY AND FIELD ADJUST FOR ALL EXISTING/NEW ROOF TOP UNITS, PIPES, ETC..
07.33	ROOF ASSEMBLY, RE. TYP. ROOF DETAIL E4/AE-506
08.05	WINDOW, RE WINDOW SCHEDULE
22.07	ROOF DRAIN WITH OVERFLOW
23.04	ROOFTOP EQUIPMENT, RE. MECH. DWG.
23.06	MECHANICAL EXHAUST STACK, RE. MECH. DWG.

PHASE 4 NOTES

1. NO FURRING NOR TILE BEHIND THE LOWER MILLWORK AT THE EXISTING WALL @ WARMING KITCHEN.
2. NOT ALL SECTIONS NOR DETAILS ARE APPLIED TO THIS PHASE. CERTAIN INFORMATION WERE ISSUED PREVIOUSLY

A1 ENLARGED OFFICE BUILDING ROOF PLAN

SCALE: 1/4" = 1'-0"

FFKR ARCHITECTS
730 Pacific Avenue · Salt Lake City, Utah 84104
O 801.521.6186 · FFKR.COM

U OF U BLDG. 303 SEISMIC UPGRADE PROJECT #22508 - PHASE 4 VE

SALT LAKE CITY UTAH

CONSTRUCTION SET - 10-10-2022

STATE OF UTAH · JACKSON FERGUSON, AIA · #334047-0301 · LICENSED ARCHITECT

△	DATE	REVISION
9	5-17-22	Ph. 4 Add #1

PROJECT NUMBER 18136

ENLARGED OFFICE BLDG. ROOF PLAN

AE-402-4

10/10/2022 2:02:15 PM

REFERENCE NOTES

02.75 SOLID & DUST PROOF CONSTRUCTION BARRIER
05.08 METAL ROOF DECKING, PAINTED IF EXPOSED

CEILING LEGEND

HEIGHT ABOVE FINISHED FLOOR
ROOM NAME
RM NO.
HT C
PNT
C = CEILING TYPE
PNT = CEILING FINISH

GYPSUM CEILING

2' X 2' ACOUSTICAL CEILING PANEL

LIGHT FIXTURES

MECHANICAL FIXTURES

FIRE SPRINKLERS +

CEILING TYPE
A GYPSUM BOARD - SUSPENDED
B GYPSUM BOARD - FRAMED
C 2' X 2' ACOUSTICAL CEILING PANEL
D OPEN TO STRUCTURE

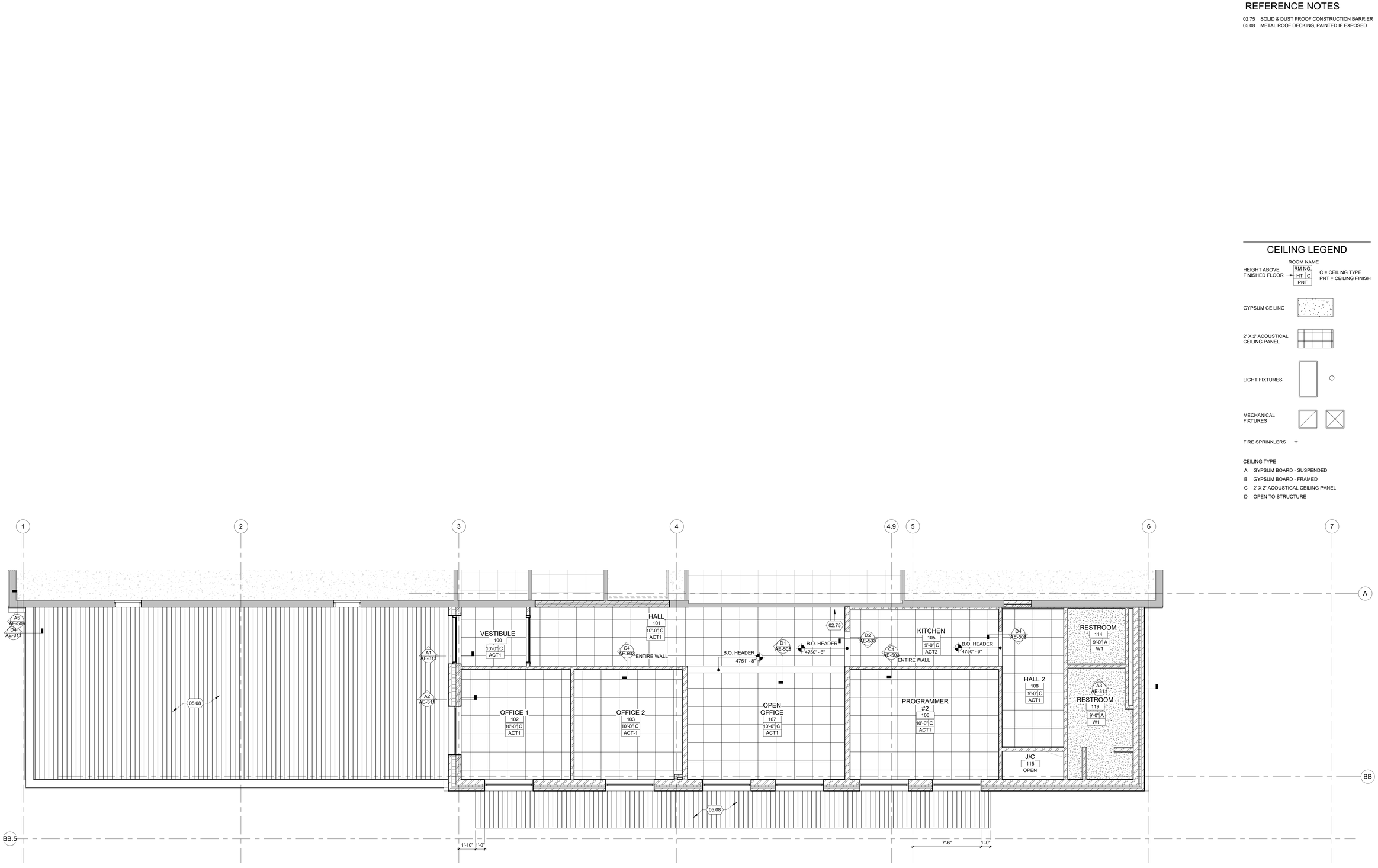

A1 ENLARGED OFFICE BUILDING RCP
SCALE: 1/4" = 1'-0"

FFKR ARCHITECTS
730 Pacific Avenue · Salt Lake City, Utah 84104
O 801.521.6186 · FFKR.COM

U OF U BLDG. 303 SEISMIC UPGRADE PROJECT #22508 - PHASE 4 VE
SALT LAKE CITY UTAH
CONSTRUCTION SET - 10-10-2022

STATE OF UTAH
JACKSON FERGUSON, AIA
#5340647-0301
LICENSED ARCHITECT
10.10.22

△ DATE REVISION

PROJECT NUMBER 18136

ENLARGED OFFICE BLDG. RCP

AE-403-4

10/10/2022 2:02:16 PM

REFERENCE NOTES

02.67	EXISTING CONCRETE FLOOR/SLAB OR ASPHALT PAVING TO REMAIN
05.06	3 5/8" METAL STUD
05.29	REINSTALLATION OF EXISTING ROOF STAIR, ADD ADDITIONAL RISER(S) AND EXTEND HAND RAIL AS REQUIRED, PAINT
05.30	1 1/2" STEEL HANDRAIL, EXTEND AS REQUIRED, PAINTED
05.40	METAL STAIRS, PAINTED, RE. STR. DWG
05.41	ALUMINUM DIAMOND PLATE
06.04	WOOD BLOCKING
07.13	SINGLE PLY ROOFING, MIN. 6" OVERLAP AT JOINTS
07.20	1/2" EXTERIOR GLASS MAT SHEATHING
07.27	3' WIDE (UNO) SINGLE PLY WALKWAY PAD, FULLY ADHERED. VERIFY AND FIELD ADJUST FOR ALL EXISTING/NEW ROOF TOP UNITS, PIPES, ETC..
07.33	ROOF ASSEMBLY, RE. TYP. ROOF DETAIL E4/AE-506
08.03	DOOR. RE DOOR SCHEDULE

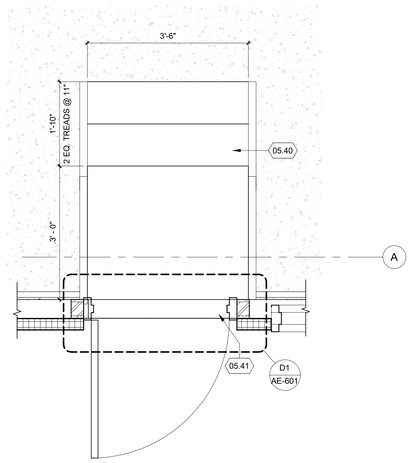

D4 ROOF ACCESS STAIR PLAN
SCALE: 3/4" = 1'-0"

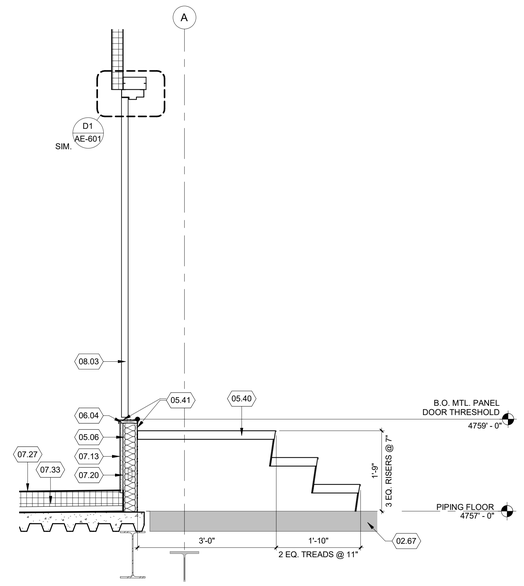

D5 ROOF ACCESS STAIR SECTION
SCALE: 3/4" = 1'-0"

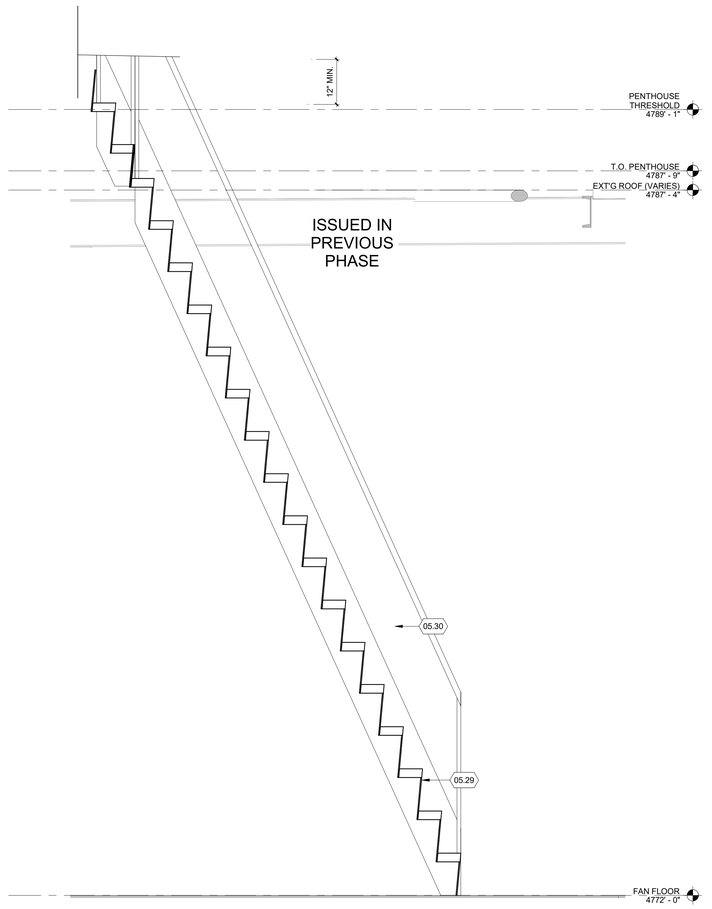

ISSUED IN PHASE 3

A4 ROOF LADDER SECTION
SCALE: 3/4" = 1'-0"

FFKR ARCHITECTS
730 Pacific Avenue · Salt Lake City, Utah 84104
O 801.521.6186 · FFKR.COM

U OF U BLDG. 303 SEISMIC UPGRADE PROJECT #22508 - PHASE 4 VE

SALT LAKE CITY UTAH

CONSTRUCTION SET - 10-10-2022



△	DATE	REVISION
10	Date 10	Prev phase

PROJECT NUMBER 18136

ENLARGED STAIRS PLANS AND SECTIONS

AE-410

10/10/2022 2:02:17 PM

REFERENCE NOTES

02.29	EXISTING STUD WALL TO REMAIN
02.66	EXISTING METAL PANEL WALL
04.01	STANDARD BRICK - 3/8" JOINT
05.01	STRUCTURAL COLUMN, PRIMED; PAINTED IF EXPOSED
05.07	6" METAL STUD
05.09	STEEL TUBE, PRIMED & PAINTED
05.18	3" INSULATED METAL PANEL (R25) TO SPAN VERTICALLY, ATTACH TO STEEL FRAME OR METAL STUDS, ALSO RE. STRU. DWG.
05.38	PAINTED METAL PANEL CLOSURE TRIM, COLOR TO MATCH, TYP AT ALL CONNECTION POINTS
05.45	GALVANIZED Z GIRT; SIZE, GA, AND SPACING AS PER METAL PANEL MANUFACTURER'S REQUIREMENT
07.13	SINGLE PLY ROOFING, MIN. 6" OVERLAP AT JOINTS
07.20	1/2" EXTERIOR GLASS MAT SHEATHING
07.26	3" (MIN. R18) RIGID INSULATION, UNO
07.29	BATT INSULATION, MIN. R3 PER 1 INCH
09.01	5/8" TYPE 'X' GYPSUM BOARD, PAINT

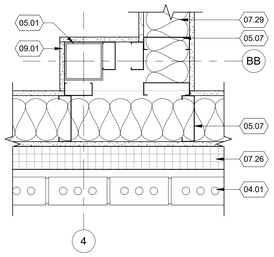

C6 COLUMN WRAP DETAIL
SCALE: 1 1/2" = 1'-0"

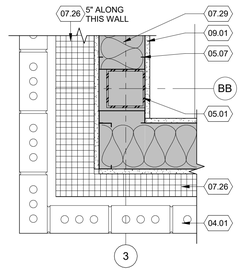

B6 PLAN DETAIL
SCALE: 1 1/2" = 1'-0"

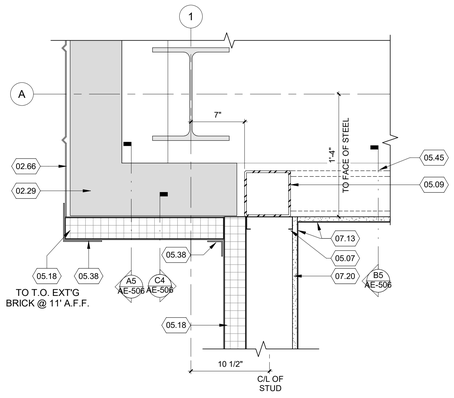

A5 METAL PANEL CORNER DETAIL
SCALE: 1 1/2" = 1'-0"

BUILDING ENVELOPE NOTES

1. VAPOR RETARDER, TO SPAN CONTINUOUSLY BELOW NEW CONCRETE SLAB ON GRADE, ABOVE METAL ROOF DECK, AND ON THE INSIDE OF METAL STUD WALL; TAPE AT ALL EXPOSED JOINTS.
2. FLUID APPLIED AIR BARRIER TO BE APPLIED ON ALL SOLID VERTICAL WALL SUBSTRATES.
3. VAPOR BARRIER TO BE APPLIED ON WALLS WHERE THERE IS NOT A SOLID SUBSTRATE; CONTINUOUS, TAPE AT ALL JOINTS.

PHASE 4 NOTES

1. NO FURRING NOR TILE BEHIND THE LOWER MILLWORK AT THE EXISTING WALL @ WARMING KITCHEN.
2. NOT ALL SECTIONS NOR DETAILS ARE APPLIED TO THIS PHASE, CERTAIN INFORMATION WERE ISSUED PREVIOUSLY

FFKR ARCHITECTS
730 Pacific Avenue · Salt Lake City, Utah 84104
O 801.521.6186 · **FFKR.COM**

U OF U BLDG. 303 SEISMIC UPGRADE PROJECT #22508 - PHASE 4 VE

SALT LAKE CITY UTAH

CONSTRUCTION SET - 10-10-2022

STATE OF UTAH · JACKSON FERGUSON AIA · #334062-2001 · LICENSED ARCHITECT · 10.10.22

△ DATE REVISION

PROJECT NUMBER 18136

PLAN DETAILS

AE-501

10/10/2022 2:02:17 PM

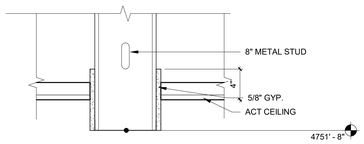

D1 OPEN OFFICE HEADER DETAIL
SCALE: 1 1/2" = 1'-0"

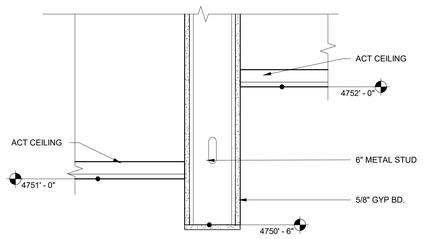

D2 HEADER DETAIL
SCALE: 1 1/2" = 1'-0"

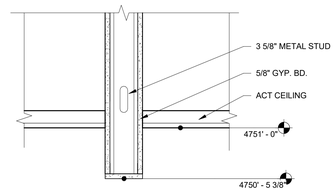

D4 HEADER DETAIL 2
SCALE: 1 1/2" = 1'-0"

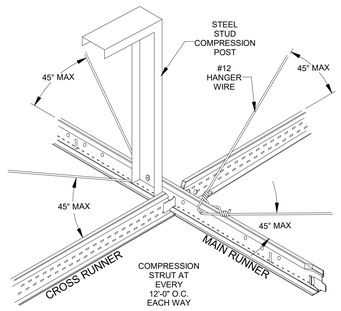

C1 SEISMIC BRACING DETAIL
SCALE: 3" = 1'-0"

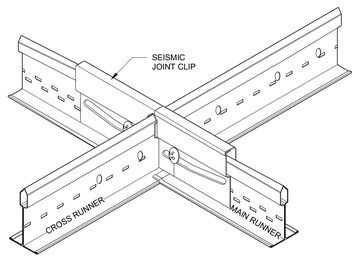

C2 SEISMIC BRACING DETAIL
SCALE: 3" = 1'-0"

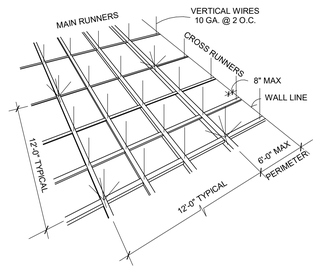

C3 SEISMIC BRACING DETAIL
SCALE: 3" = 1'-0"

NOTE:

1. A CEILING AREA OF 144 SQ. FT. OR LESS SURROUNDED BY WALLS THAT CONNECT DIRECTLY TO THE STRUCTURE ABOVE SHALL BE EXEMPT FROM LATERAL LOAD DESIGN REQUIREMENTS OF THESE STANDARDS.
2. IN EACH ORTHOGONAL DIRECTION, ONE END OF THE CEILING GRID SHALL BE ATTACHED WITH AN ICC EVALUATED & APPROVED SEISMIC CLIP SYSTEM AND 0.75" OF CLEARANCE TO ALLOW FREE HORIZONTAL MOVEMENT
3. LATERAL CEILING BRACING IS REQUIRED @ 12'-0" O.C.IN BOTH DIRECTIONS FOR ALL CEILINGS GREATER THAN 1,000 SF.
4. CEILING AREAS OVER 2,500 SF MUST HAVE SIESMIC SEPARATION JOINTS
5. LIGHT FIXTURES, MECHANICAL EQUIPMENT, ETC. MUST BE SUPPORTED INDEPENDENT OF THE CEILING SUPPORT/ BRACKETING SYSTEM.

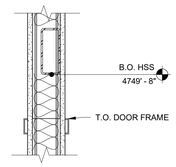

C4 FUTURE BARN DOOR SUPPORT
SCALE: 1 1/2" = 1'-0"

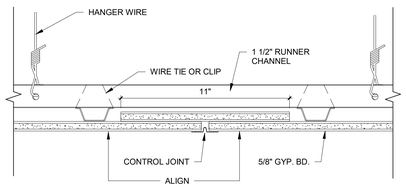

B1 CONTROL JOINT DETAIL
SCALE: 3" = 1'-0"

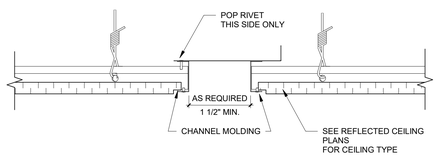

B2 CEILING EXPANSION JOINT
SCALE: 3" = 1'-0"

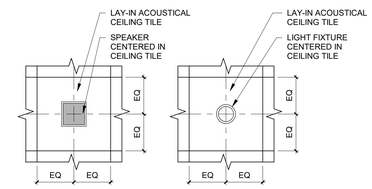

B3 TYP LAYOUT OF FIXTURES AT ACOUSTICAL CEILING
SCALE: 1 1/2" = 1'-0"

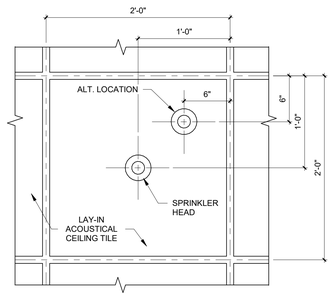

B4 SPRINKLER HEAD
SCALE: 1 1/2" = 1'-0"

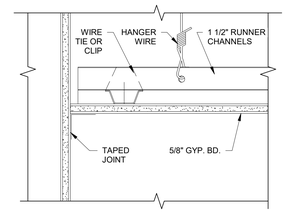

B5 GYP. BD. DETAIL
SCALE: 3" = 1'-0"

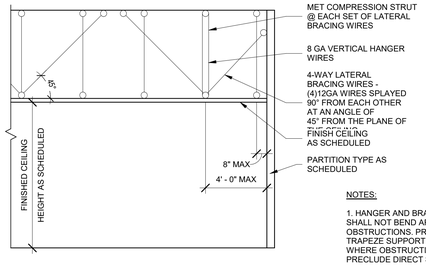

NOTES:

1. HANGER AND BRACING WIRES SHALL NOT BEND AROUND OBSTRUCTIONS. PROVIDE TRAPEZE SUPPORT ASSEMBLY WHERE OBSTRUCTIONS PRECLUDE DIRECT SUSPENSION.
2. HANGER WIRES SHALL NOT HANG MORE THAN 1 IN 6 OUT OF PLUMB.
3. ATTACH GYP BD CEILING AS SCHED. TO EACH ADJOINING PARTITION.

A1 CEILING FRAMING SECTION
SCALE: 1/4" = 1'-0"

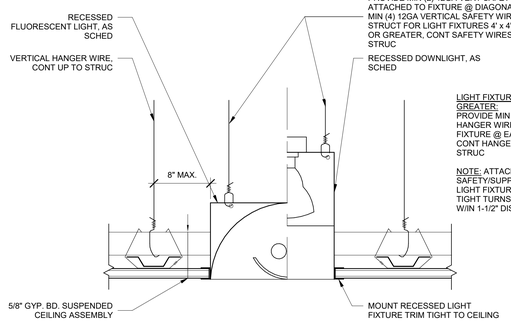

A2 GYP BD CLG - REC LIGHT FIXTURE DETAIL
SCALE: 3" = 1'-0"

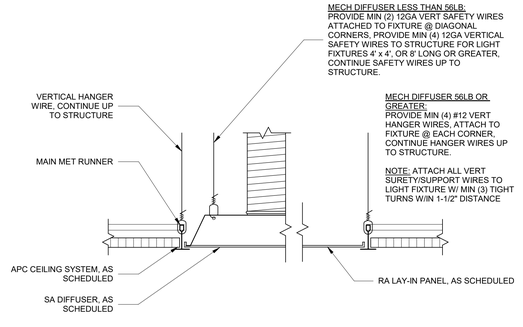

A4 APC-MECH DIFFUSER DETAIL
SCALE: 3" = 1'-0"

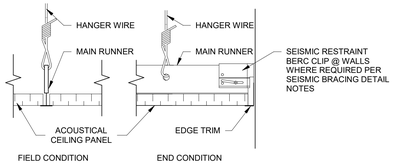

A5 CLG. ACOUSTICAL PANEL DETAIL
SCALE: 3" = 1'-0"

PHASE 4 NOTES

1. NO FURRING NOR TILE BEHIND THE LOWER MILLWORK AT THE EXISTING WALL @ WARMING KITCHEN.
2. NOT ALL SECTIONS NOR DETAILS ARE APPLIED TO THIS PHASE. CERTAIN INFORMATION WERE ISSUED PREVIOUSLY

DATUM NOTES

1. THE ELEVATION MARKERS ON THE ARCHITECTURAL, STRUCTURAL, MECHANICAL, PLUMBING, AND ELECTRICAL DRAWINGS ARE 3'-0" LOWER THAN THE SURVEY (UNIVERSITY BENCHMARK). DO NOT USE THESE MARKERS OUTSIDE OF THE BUILDING ENVELOPE.
2. THE CIVIL DRAWINGS ARE INLINE WITH THE CURRENT UNIVERSITY BENCHMARK.

FFKR ARCHITECTS
730 Pacific Avenue · Salt Lake City, Utah 84104
O 801.521.6186 · FFKR.COM

U OF U BLDG. 303 SEISMIC UPGRADE PROJECT #22508 - PHASE 4 VE
SALT LAKE CITY UTAH
CONSTRUCTION SET - 10-10-2022

STATE OF UTAH
JACKSON FERGUSON, AIA
#9340847-0301
LICENSED ARCHITECT
10.10.22

△	DATE	REVISION
3	10-7-21	Phase 2 PR #11
4	10-27-21	Ph. 3 PR #5

PROJECT NUMBER 18136

TYPICAL CEILING DETAILS

AE-503

10/10/2022 2:02:19 PM

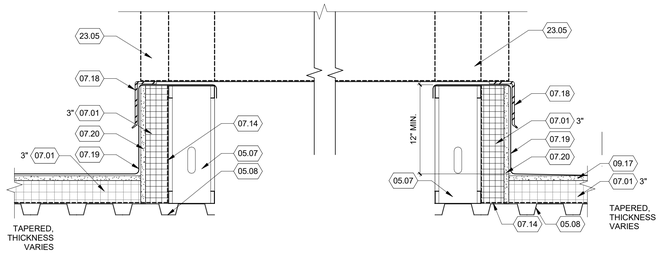

D1 ROOF CURB DETAIL - PHASE 2

SCALE: 1 1/2" = 1'-0"

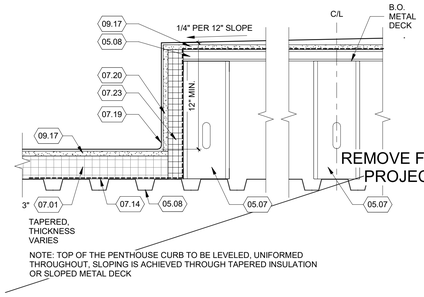

NOTE: TOP OF THE PENTHOUSE CURB TO BE LEVELED, UNIFORMED THROUGHOUT, SLOPING IS ACHIEVED THROUGH TAPERED INSULATION OR SLOPED METAL DECK

D3 PENTHOUSE CURB

SCALE: 1 1/2" = 1'-0"

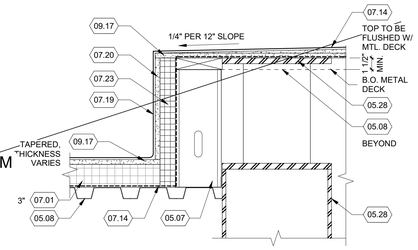

NOTE: TOP OF THE PENTHOUSE CURB TO BE LEVELED, SLOPING IS ACHIEVED THROUGH TAPERED INSULATION OR SLOPED METAL DECK

D4 PENTHOUSE CURB @ CORNER

SCALE: 1 1/2" = 1'-0"

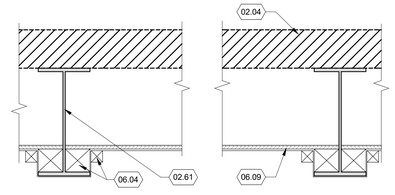

NOTE: PROTECTION MUST BE IN PLACE PRIOR TO ANY DEMO WORK. THIS DETAIL TO BE USED DURING DEMO AND NEW CONSTRUCTION

D5 ELEC. ROOM PROTECTION

SCALE: 1 1/2" = 1'-0"

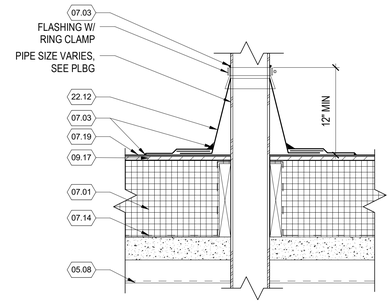

C5 TYP. PENETRATION PIPE FLASHING

SCALE: 1 1/2" = 1'-0"

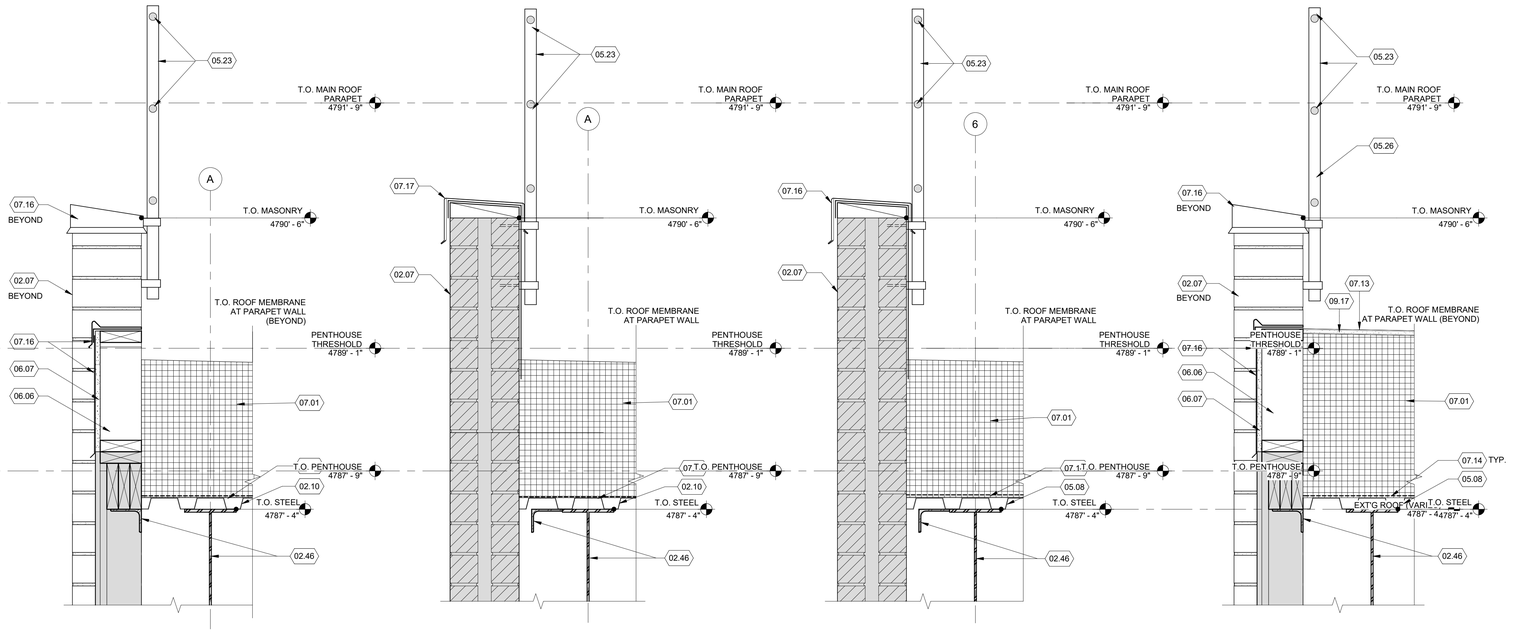

B1 PARAPET SECTION GRIDS A-B (ABOVE EXISTING WINDOWS) PH.2

SCALE: 1 1/2" = 1'-0"

B2 PARAPET SECTION GRIDS A-B PH.2

SCALE: 1 1/2" = 1'-0"

B3 PARAPET SECTION GRIDS PH.2

SCALE: 1 1/2" = 1'-0"

B4 PARAPET SECTION AT WALL OPENING PH.2

SCALE: 1 1/2" = 1'-0"

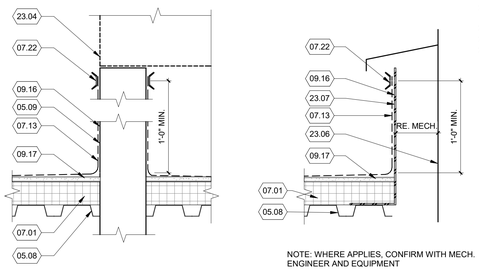

NOTE: WHERE APPLIES, CONFIRM WITH MECH. ENGINEER AND EQUIPMENT

B5 ROOF POST DETAIL

SCALE: 1 1/2" = 1'-0"

B6 ROOF EXHAUST DETAIL

SCALE: 1 1/2" = 1'-0"

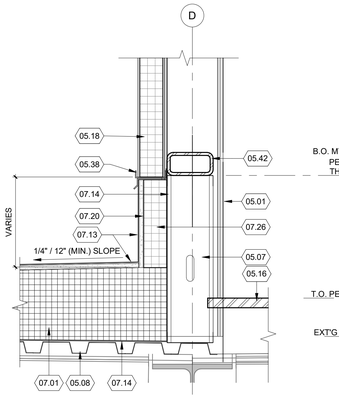

A1 PENTHOUSE WALL DETAIL

SCALE: 1 1/2" = 1'-0"

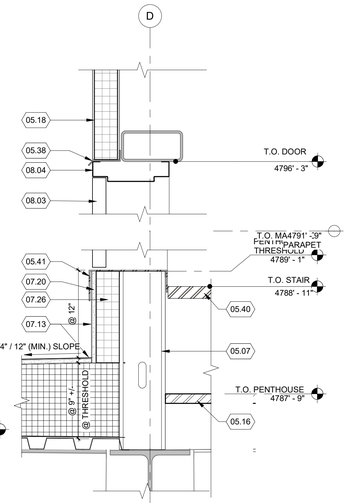

A2 DOOR HEAD/THRESHOLD

SCALE: 1 1/2" = 1'-0"

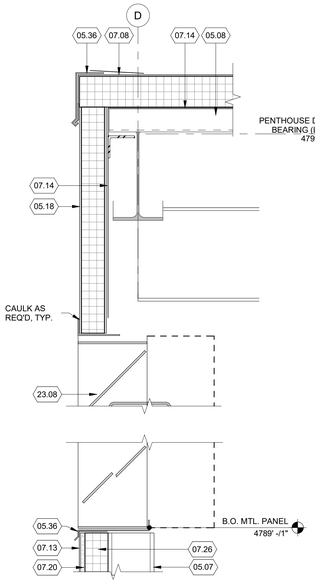

A3 PENTHOUSE WALL DETAIL

SCALE: 1 1/2" = 1'-0"

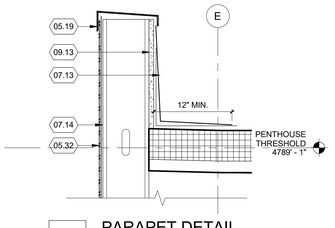

A4 PARAPET DETAIL

SCALE: 1 1/2" = 1'-0"

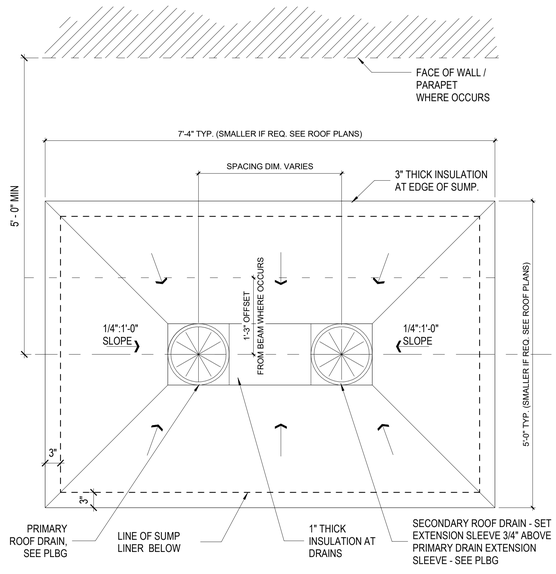

A5 TYP ROOF/OVERFLOW DRAIN SUMP

SCALE: 1" = 1'-0"

BUILDING ENVELOPE NOTES

1. VAPOR RETARDER, TO SPAN CONTINUOUSLY BELOW NEW CONCRETE SLAB ON GRADE, ABOVE METAL ROOF DECK, AND ON THE INSIDE OF METAL STUD WALL, TAPE AT ALL EXPOSED JOINTS.
2. FLUID APPLIED AIR BARRIER TO BE APPLIED ON ALL SOLID VERTICAL WALL SUBSTRATES.
3. VAPOR BARRIER TO BE APPLIED ON WALLS WHERE THERE IS NOT A SOLID SUBSTRATE; CONTINUOUS, TAPE AT ALL JOINTS.

PHASE 4 NOTES

1. NO FURRING NOR TILE BEHIND THE LOWER MILLWORK AT THE EXISTING WALL @ WARMING KITCHEN.
2. NOT ALL SECTIONS NOR DETAILS ARE APPLIED TO THIS PHASE, CERTAIN INFORMATION WERE ISSUED PREVIOUSLY

GENERAL NOTES

1. SHORE ALL ROOF TOP EQUIPMENT, PIPES, ETC., AS REQUIRED
2. REFER TO MEP DRAWINGS FOR ADDITIONAL INFORMATION
3. TAPERED INSULATION IS REQUIRED AT THE ROOF LEVEL TO ACHIEVE SLOPES INDICATED ON ROOF PLAN
4.

DATUM NOTES

1. THE ELEVATION MARKERS ON THE ARCHITECTURAL, STRUCTURAL, MECHANICAL, PLUMBING, AND ELECTRICAL DRAWINGS ARE 3'-0" LOWER THAN THE SURVEY (UNIVERSITY BENCHMARK). DO NOT USE THESE MARKERS OUTSIDE OF THE BUILDING ENVELOPE.
2. THE CIVIL DRAWINGS ARE INLINE WITH THE CURRENT UNIVERSITY BENCHMARK.

REFERENCE NOTES

02.04	REMOVE EXISTING ROOFING, INSULATION, AND DECKING BELOW FROM GRID B TO E
02.07	EXISTING MASONRY WALL TO REMAIN
02.10	EXISTING DECKING TO REMAIN FROM GRID A TO B
02.46	EXISTING STRUCTURE TO REMAIN
02.61	EXISTING STEEL TO REMAIN
05.01	STRUCTURAL COLUMN, PRIMED; PAINTED IF EXPOSED
05.07	6" METAL STUD
05.08	METAL ROOF DECKING, PAINTED IF EXPOSED
05.09	STEEL TUBE, PRIMED & PAINTED
05.16	NEW METAL FLOOR GRATE, RE. STR. DWG. FOR SUPPORT DETAIL
05.18	3" INSULATED METAL PANEL (R25) TO SPAN VERTICALLY, ATTACH TO STEEL FRAME OR METAL STUDS, ALSO RE. STRU. DWG.
05.19	PREPAINTED METAL CAP/FLASHING, CAULK AS REQ'D
05.23	OSHA COMPLIANT WALL MOUNT WIRE ROPE GUARDRAIL
05.26	2" X 2" ANGLE (PT). ANCHOR TO WALL
05.28	STEEL STUB, RE. STR. DWG.
05.32	24 GAUGE PREPAINTED METAL PANEL (COLOR TO MATCH EXISTING) WITH EXPOSED FASTENER, CAULKING AND CLOSURE ANGLE AT ALL EDGES
05.36	PAINTED METAL DRIP EDGE, FULLY ADHERED AT ALL HORIZONTAL ROOF SURFACE, MECHANICALLY FASTEN OTHERWISE
05.38	PAINTED METAL PANEL CLOSURE TRIM, COLOR TO MATCH, TYP AT ALL CONNECTION POINTS
05.40	METAL STAIRS, PAINTED, RE. STR. DWG
05.41	ALUMINUM DIAMOND PLATE
05.42	PAINTED STRUCTURAL SUPPORT, RE. STRU. DWG.
06.04	WOOD BLOCKING
06.06	EXTERIOR ROUGH CARPENTRY
06.07	EXTERIOR GYPSUM SHEATHING
06.09	3/4" PLYWOOD
07.01	RIGID ROOF INSULATION. MIN. R 32,, THICKNESS VARIES
07.03	SEALANT
07.08	SINGLE PLY ROOFING WITH MIN. R 32 INSULATION,, 1/4" PER 12" SLOPE INSULATION, NEW METAL B DECK
07.13	SINGLE PLY ROOFING, MIN. 6" OVERLAP AT JOINTS
07.14	VAPOR RETARDER, TO SPAN CONTINUOUSLY BELOW NEW CONCRETE SLAB ON GRADE, ABOVE METAL ROOF DECK, AND ON THE INSIDE OF METAL STUD WALL, TAPE AT ALL EXPOSED JOINTS
07.16	PREPAINTED METAL PARAPET CAP
07.17	SHEET METAL COPING WITH SLOPED BLOCKING
07.18	METAL FLASHING WITH DRIP EDGE
07.19	SINGLE PLY ROOFING MEMBRANE TO WRAP OVER CURB WALL
07.20	1/2" EXTERIOR GLASS MAT SHEATHING
07.22	GALVANIZED TERMINATION BAR WITH CAULKING ON ALL SIDES
07.23	2" RIGID INSULATION, MIN. R12
07.26	3" (MIN. R18) RIGID INSULATION, UNO
08.03	DOOR. RE DOOR SCHEDULE
08.04	DOOR FRAME
09.13	5/8" EXTERIOR GYPSUM SHEATHING
09.16	PAINT, AS REQ'D
09.17	5/8" COVER BOARD
22.12	ELASTOMERIC PIP BOOT
23.04	ROOFTOP EQUIPMENT, RE. MECH. DWG.
23.05	FUTURE MECHANICAL UNIT. RE: MECHANICAL DRAWINGS
23.06	MECHANICAL EXHAUST STACK. RE. MECH. DWG
23.07	MECHANICAL EXHAUST STEEL COLLAR AS REQ'D
23.08	FIXED AIR INTAKE LOUVER WITH MECHANICALLY OPERATED DAMPER, RE. MECH. DWG. FOR ACTUAL SIZE AND STR. DWG. FOR SUPPORT

FFKR ARCHITECTS
730 Pacific Avenue · Salt Lake City, Utah 84104
O 801.521.6186 · FFKR.COM

U OF U BLDG. 303 SEISMIC UPGRADE PROJECT #22508 - PHASE 4 VE

SALT LAKE CITY UTAH

CONSTRUCTION SET - 10-10-2022

STATE OF UTAH · JACKSON FERGUSON, AIA · #334042-2301 · LICENSED ARCHITECT · 10.10.22

	DATE	REVISION
1	1-21-21	Add #4/Checker Comments
2	5-3-21	Phase 3 PR #4

PROJECT NUMBER 18136

ROOF DETAILS

AE-505

10/10/2022 2:02:22 PM

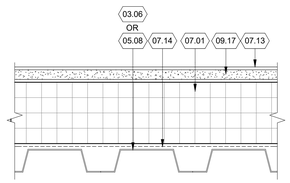

E4 TYP. ROOF DETAIL
SCALE: 3" = 1'-0"

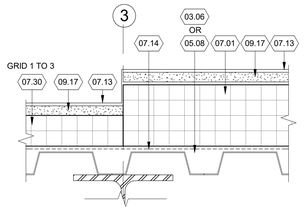

E5 ROOF TRANSITION DETAIL
SCALE: 3" = 1'-0"

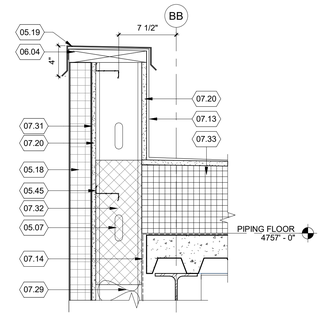

D4 PARAPET DETAIL @ GRID BB
SCALE: 1 1/2" = 1'-0"

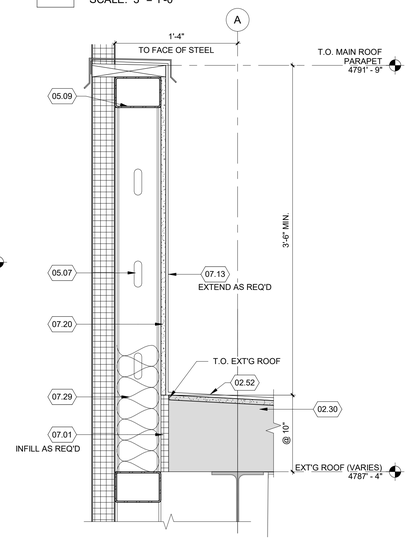

C5 PARAPET DETAIL @ GRID A - HIGH (TYP.)
SCALE: 1 1/2" = 1'-0"

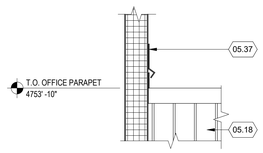

C4 OFFICE PARAPET
SCALE: 1 1/2" = 1'-0"

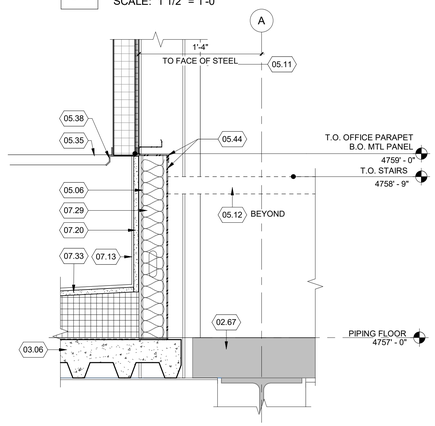

B5 SECTION DETAIL @ GRID A - LOW
SCALE: 1 1/2" = 1'-0"

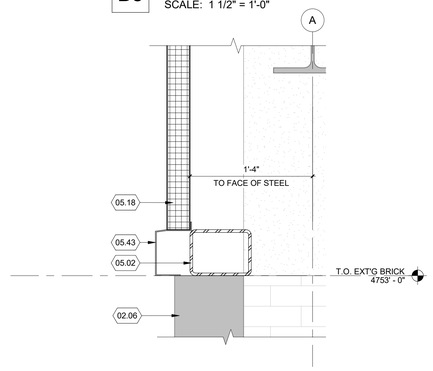

A5 WALL DETAIL
SCALE: 1 1/2" = 1'-0"

REFERENCE NOTES

02.06 EXISTING MASONRY WALL TO REMAIN TO 11'-0" A.F.F.
02.30 EXISTING ROOFING AND INSULATION TO REMAIN
02.52 EXISTING SINGLE PLY ROOFING, MIN. 12" OVERLAP @ SEAM
02.67 EXISTING CONCRETE FLOOR/SLAB OR ASPHALT PAVING TO REMAIN
03.06 CONCRETE SLAB ON METAL DECK, RE. STRU. DWG.
05.02 STRUCTURAL BEAM, PRIMED; PAINTED IF EXPOSED
05.06 3 5/8" METAL STUD
05.07 6" METAL STUD
05.08 METAL ROOF DECKING, PAINTED IF EXPOSED
05.09 STEEL TUBE, PRIMED & PAINTED
05.11 PAINTED STEEL FRAME, RE. STRU. DWG
05.12 NEW STAIR, PAINTED
05.18 3" INSULATED METAL PANEL (R25) TO SPAN VERTICALLY, ATTACH TO STEEL FRAME OR METAL STUDS, ALSO RE. STRU. DWG.
05.19 PREPAINTED METAL CAP/FLASHING, CAULK AS REQ'D
05.35 42" HIGH GUARD RAIL WITH A MID RAIL AND 4" BASE, MATCH EXISTING, PAINTED
05.37 GALVANIZED RIGLET, FLASHING, ETC., CAULK, TYP.
05.38 PAINTED METAL PANEL CLOSURE TRIM, COLOR TO MATCH, TYP AT ALL CONNECTION POINTS
05.43 POWDER COATED ALUMINUM TRIM
05.44 14 GA DIAMOND PLATE
05.45 GALVANIZED Z GIRT; SIZE, GA. AND SPACING AS PER METAL PANEL MANUFACTURER'S REQUIREMENT
06.04 WOOD BLOCKING
07.01 RIGID ROOF INSULATION. MIN. R 32,, THICKNESS VARIES
07.13 SINGLE PLY ROOFING, MIN. 6" OVERLAP AT JOINTS
07.14 VAPOR RETARDER, TO SPAN CONTINUOUSLY BELOW NEW CONCRETE SLAB ON GRADE, ABOVE METAL ROOF DECK, AND ON THE INSIDE OF METAL STUD WALL, TAPE AT ALL EXPOSED JOINTS
07.20 1/2" EXTERIOR GLASS MAT SHEATHING
07.29 BATT INSULATION, MIN. R3 PER 1 INCH
07.30 RIGID ROOF INSULATION, 1/4" PER FOOT SLOPE
07.31 FLUID APPLIED AIR BARRIER
07.32 SPRAY FOAM INSULATION
07.33 ROOF ASSEMBLY, RE. TYP. ROOF DETAIL E4/AE-506
09.17 5/8" COVER BOARD

BUILDING ENVELOPE NOTES

1. VAPOR RETARDER, TO SPAN CONTINUOUSLY BELOW NEW CONCRETE SLAB ON GRADE, ABOVE METAL ROOF DECK, AND ON THE INSIDE OF METAL STUD WALL; TAPE AT ALL EXPOSED JOINTS.
2. FLUID APPLIED AIR BARRIER TO BE APPLIED ON ALL SOLID VERTICAL WALL SUBSTRATES.
3. VAPOR BARRIER TO BE APPLIED ON WALLS WHERE THERE IS NOT A SOLID SUBSTRATE; CONTINUOUS, TAPE AT ALL JOINTS.

PHASE 4 NOTES

1. NO FURRING NOR TILE BEHIND THE LOWER MILLWORK AT THE EXISTING WALL @ WARMING KITCHEN.
2. NOT ALL SECTIONS NOR DETAILS ARE APPLIED TO THIS PHASE, CERTAIN INFORMATION WERE ISSUED PREVIOUSLY

GENERAL NOTES

1. SHORE ALL ROOF TOP EQUIPMENT, PIPES, ETC., AS REQUIRED
2. REFER TO MEP DRAWINGS FOR ADDITIONAL INFORMATION
3. TAPERED INSULATION IS REQUIRED AT THE ROOF LEVEL TO ACHIEVE SLOPES INDICATED ON ROOF PLAN
4.

DATUM NOTES

1. THE ELEVATION MARKERS ON THE ARCHITECTURAL, STRUCTURAL, MECHANICAL, PLUMBING, AND ELECTRICAL DRAWINGS ARE 3'-0" LOWER THAN THE SURVEY (UNIVERSITY BENCHMARK). DO NOT USE THESE MARKERS OUTSIDE OF THE BUILDING ENVELOPE.
2. THE CIVIL DRAWINGS ARE INLINE WITH THE CURRENT UNIVERSITY BENCHMARK.

FFKR ARCHITECTS
730 Pacific Avenue · Salt Lake City, Utah 84104
O 801.521.6186 · FFKR.COM

U OF U BLDG. 303 SEISMIC UPGRADE PROJECT #22508 - PHASE 4 VE
SALT LAKE CITY UTAH
CONSTRUCTION SET - 10-10-2022

STATE OF UTAH
JACKSON FERGUSON AIA
#13406623-0301
LICENSED ARCHITECT
10.10.22

△ DATE REVISION

PROJECT NUMBER 18136

ROOF DETAILS

AE-506

10/10/2022 2:02:22 PM

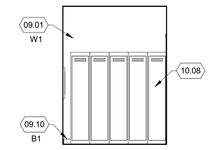

E1 HALL 2 108 N.
SCALE: 1/4" = 1'-0"

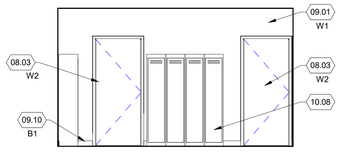

E2 HALL 2 108 E.
SCALE: 1/4" = 1'-0"

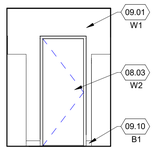

E3 HALL 2 108 S.
SCALE: 1/4" = 1'-0"

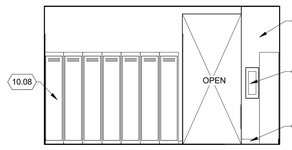

E4 HALL 2 108 W.
SCALE: 1/4" = 1'-0"

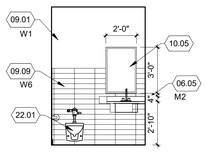

D1 RR 119 E
SCALE: 1/4" = 1'-0"

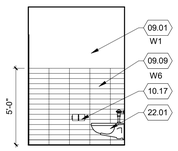

D2 RR 119 N
SCALE: 1/4" = 1'-0"

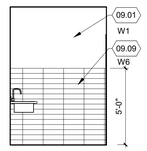

D3 RR 119 S
SCALE: 1/4" = 1'-0"

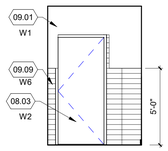

D4 RR 119 W
SCALE: 1/4" = 1'-0"

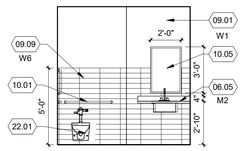

C1 RR 114 E
SCALE: 1/4" = 1'-0"

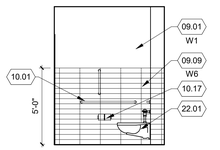

C2 RR 114 N
SCALE: 1/4" = 1'-0"

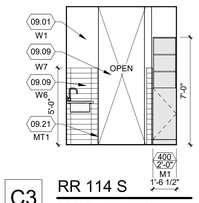

C3 RR 114 S
SCALE: 1/4" = 1'-0"

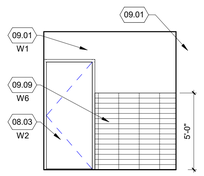

C4 RR 114 W
SCALE: 1/4" = 1'-0"

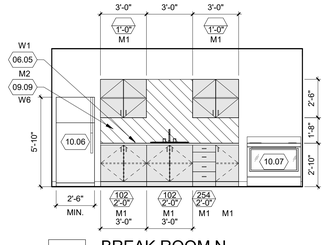

C5 BREAK ROOM N
SCALE: 1/4" = 1'-0"

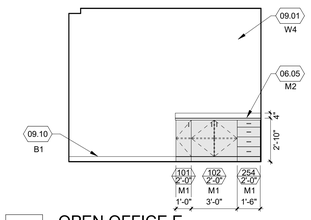

C6 OPEN OFFICE E
SCALE: 1/4" = 1'-0"

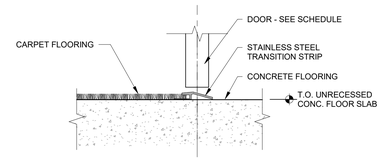

C7 CONCRETE TO CARPET TRANSITION
SCALE: 3" = 1'-0"

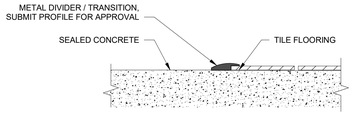

D7 TILE TO CONCRETE TRANSITION
SCALE: 3" = 1'-0"

FINISH LEGEND						
CODE	PRODUCT TYPE	MANUFACTURER	STYLE	COLOR	SPECIFICATIONS	NOTES
BASE						
B1	RUBBER BASE	JOHNSONITE	STANDARD COVE	29 MOONROCK	4" H	GENERAL BASE
CEILING						
ACT1	ACOUSTIC CEILING TILE	ARMSTRONG	DUNE 1774	WHITE	24"X24", LAY IN 15/16" GRID, WHITE	GENERAL CEILING
ACT2	ACOUSTIC CEILING TILE	ARMSTRONG	CLEAN ROOM VL	WHITE	24"X24", LAY IN 15/16" GRID, WHITE	KITCHEN AREA
FLOORING						
F1	CARPET TILE	MILLIKEN	COMMON THREAD POINT 3	GIANT SEQUOIA WITH LAVA PTT 169-25	24"X24" INSTALL: 50% WITH LAVA STRIPE, ASHLAR	GENERAL CARPET
F2	SEALDED CONCRETE	TBD		NATURAL	-	
F3	MOSAIC PORCELAIN TILE	DALTILE	KEYSTONES	SUEDE GRAY SPECKLE D208	2" HEXAGON, GROUT: MAPEI CHARCOAL 47	SHOWER FLOOR
MILLWORK						
M1	PLASTIC LAMINATE	WILSONART		FROSTY WHITE 1573		BREAKROOM CABINETS
M2	QUARTZ COUNTERTOP	PENTAL	POLISHED	STORMY SKY BS250P	3CM, EASED EDGE PROFILE, POLISHED	BREAKROOM COUNTERTOPS
M3	SOLID SURFACE	WILSONART		HOT STONE 9201GS	2CM, EASED EDGE PROFILE, POLISHED	WINDOW SILLS
MISCELLANEOUS						
BLD1	BLINDS	BALI	CLASSIC BLINDS 3000 SERIES	WHITE	1" WIDE VIRGIN ALUMINUM ALLOYED WITH CLEAR PLASTIC WAND	AT ALL WINDOWS
WALL						
MT1	METAL TRIM	SCHLUTER	JOLLY	ALLUMINUM	MATCH TILE TICKNESS	TRIM
W1	PAINT	SHERWIN WILLIAMS		CEILING BRIGHT WHITE SW7007	EGGSHELL ON WALLS, FLAT ON CEILINGS	GENERAL PAINT
W2	PAINT	SHERWIN WILLIAMS		GAUNTLET GRAY SW7019	SEMI-GLOSS ON TRIM, 2X COATS	DOOR AND FRAME
W3	PAINT	SHERWIN WILLIAMS		FELTED WOOL SW9171	EGGSHELL ON WALLS, FLAT ON CEILINGS, 2X COATS	ACCENT
W4	PAINT	PPG		RED GUMBALL PPG1187-7	EGGSHELL ON WALLS, FLAT ON CEILINGS, 2X COATS	ACCENT
W5	FIBER REINFORCED PANEL	CRANE COMPOSITES	PEBBLED	WHITE	4'x8' SHEETS, USE COORDINATING TRIM WORK TO FINISH EXPOSED EDGES	JANITOR WET WALLS
W6	PORCELAIN TILE	DALTILE	COLORWHEEL LINEAR	ARCTIC WHITE 0790, MATTE	4"X16", INSTALL: STACKED, GROUT: MAPEI CHARCOAL 47, USE COORDINATING BULLNOSE TRIM AND COVE BASE	BACKSPLASH, RR TILE
W7	PORCELAIN TILE	DALTILE	PANORAMIC	MANOR WHITE	63"X126", INSTALL: MONOLITHIC, GROUT: MAPEI AVALANCHE 38, CAP ALL UNFINISHED ENDS WITH SCHLUTER SCHIENE IN ALUMINUM	SHOWER WALL TILE

REFERENCE NOTES

06.05	COUNTERTOP
08.03	DOOR. RE DOOR SCHEDULE
09.01	5/8" TYPE 'X' GYPSUM BOARD, PAINT
09.09	WALL TILE
09.10	WALL BASE
09.21	METAL TRIM
10.01	GRAB BAR
10.04	FIRE EXTINGUISHER CABINET
10.05	MIRROR
10.06	REFRIGERATOR
10.07	RANGE
10.08	LOCKERS
10.11	MANUAL ROLLER SHADE
10.17	TOILET TISSUE DISPENSER
22.01	WATER CLOSET, WALL HUNG

GENERAL NOTES

1. SEE FLOOR FINISH DETAILS FOR FLOOR TO FLOOR TRANSITIONS. ALL TRANSITIONS TO OCCUR AT CENTER OF DOOR, U.N.O
2. REFER TO FINISH LEGEND ON SHEET AE-600-4 FOR ALL FINISHES.
3. PROVIDE FINISHED PANEL AT ALL EXPOSED MILLWORK, TO MATCH ADJACENT FINISH.
4. ALL CABINET PULLS TO BE SCHAUB AND COMPANY SS-096 STAINLESS STEEL OR SIMILAR. SUBMIT FOR APPROVAL.
5. ALL CABINET INTERIORS AND SHELVES TO BE FINISHED IN WHITE MELAMINE, TYP.
6. SEAL ALL TILE TRANSITIONS FROM FLOOR TO WALL TILE WITH CLEAR EPOXY BEAD.
7. ALL HOLLOW METAL DOORS AND FRAMES TO BE W2, U.N.O.
8. PROVIDE 2" X 2" X 4' H CORNER GUARDS AT ALL OUTSIDE CORNERS.

FINISH LEGEND

Room name
101
F B W

ROOM IS NOT ELEVATED, ALL FINISHES ARE SHOWN IN THE TAG

ONLY FLOOR FINISH, SEE ROOM'S INTERIOR ELEVATIONS FOR VERTICAL FINISHES

F = FLOOR FINISH
B = BASE FINISH
W = WALL FINISH

NF = NO FINISH
* = SEE FINISH TAG ON LARGE SCALE DRAWING

SEE FINISH LEGEND FOR FINISHES

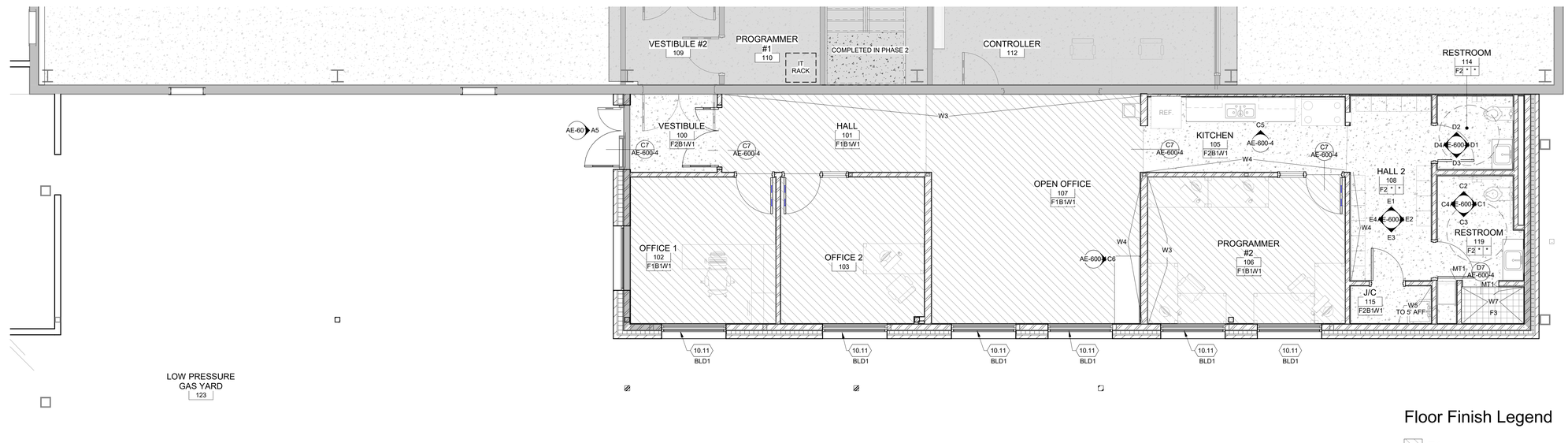

Floor Finish Legend

F1

F2

A1 ENLARGED OFFICE BUILDING FINISH PLAN
SCALE: 1/4" = 1'-0"

FFKR ARCHITECTS
730 Pacific Avenue · Salt Lake City, Utah 84104
O 801.521.6186 · FFKR.COM

U OF U BLDG. 303 SEISMIC UPGRADE PROJECT #22508 - PHASE 4 VE
SALT LAKE CITY UTAH
CONSTRUCTION SET - 10-10-2022

STATE OF UTAH
JACKSON FERGUSON, AIA
#534047-6301
LICENSED ARCHITECT
10.10.22

△	DATE	REVISION
9	5-17-22	Ph. 4 Add #1

PROJECT NUMBER 18136

FINISH SCHEDULE AND PLAN

AE-600-4

10/10/2022 2:02:27 PM

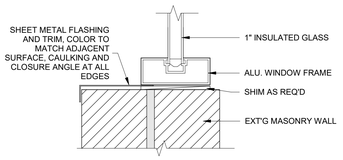

E1 ALU. SILL DETAIL
SCALE: 3" = 1'-0"

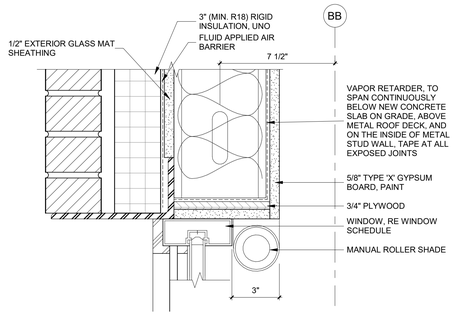

E2 ALU. HEAD DETAIL
SCALE: 3" = 1'-0"

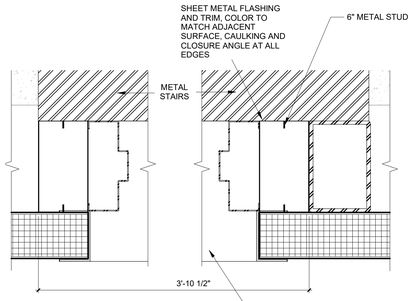

D1 ROOF DOOR JAMB DETAIL
SCALE: 3" = 1'-0"

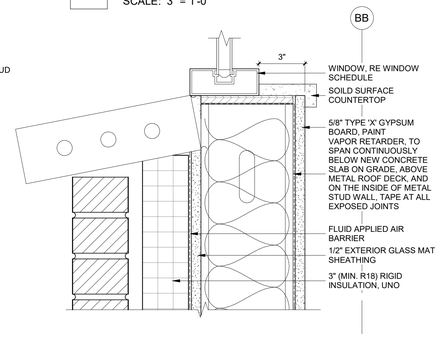

D2 ALU. SILL DETAIL
SCALE: 3" = 1'-0"

C1 SOUND GLASS DETAIL
SCALE: 3" = 1'-0"

C2 SLAB EDGE DETAIL
SCALE: 3" = 1'-0"

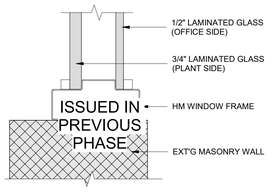

B1 SOUND GLASS DETAIL
SCALE: 3" = 1'-0"

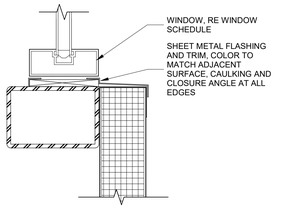

B2 TYP. ALU. SILL DETAIL
SCALE: 3" = 1'-0"

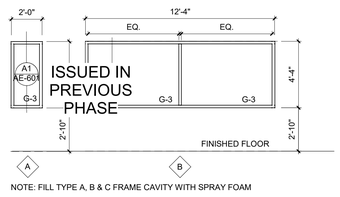

NOTE: FILL TYPE A, B & C FRAME CAVITY WITH SPRAY FOAM

B3 INTERIOR WINDOW TYPES (HOLLOW METAL)
SCALE: 1/4" = 1'-0"

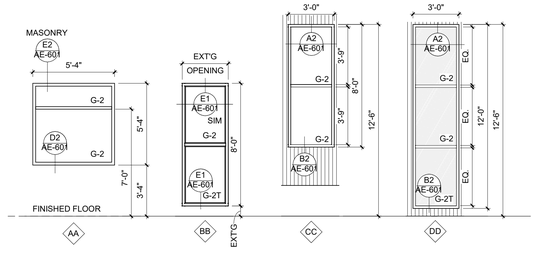

B4 EXTERIOR WINDOW TYPES (FIXED ALUMINUM)
SCALE: 1/4" = 1'-0"

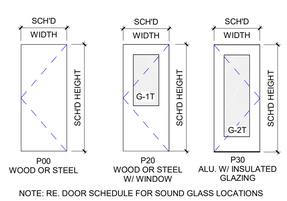

NOTE: RE. DOOR SCHEDULE FOR SOUND GLASS LOCATIONS

B6 DOOR PANELS
SCALE: 1/4" = 1'-0"

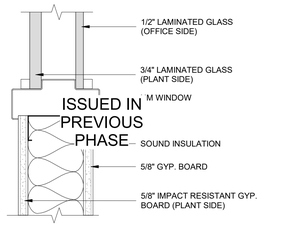

A1 SOUND GLASS DETAIL
SCALE: 3" = 1'-0"

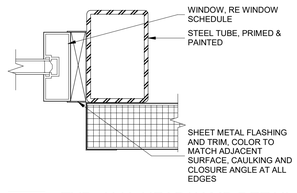

A2 TYP. ALU. HEAD/JAMB DETAIL
SCALE: 3" = 1'-0"

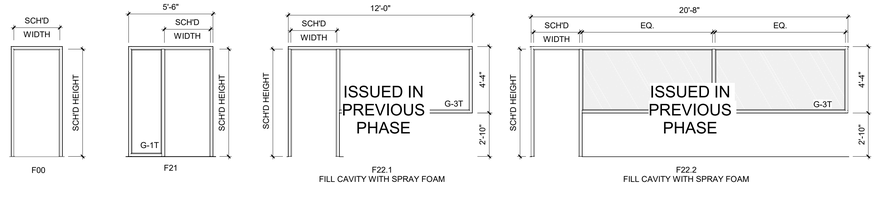

A3 HOLLOW METAL DOOR FRAMES
SCALE: 1/4" = 1'-0"

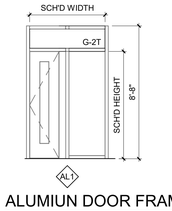

A5 ALUMIUN DOOR FRAME
SCALE: 1/4" = 1'-0"

PREVIOUSLY ISSUED WITH PHASE 3

DOOR AND FRAME SCHEDULE-PHASE 3

DOOR NUMBER	DOOR SIZE WIDTH	DOOR SIZE HEIGHT	DOOR THICK	DOOR LEAF 1 TYPE	DOOR LEAF 2 TYPE	DOOR MATERIAL	FRAME TYPE	FRAME MATERIAL	FIRE RATING (MINUTES)	HARDWARE GROUP	NOTES*
OPERATING FLOOR											
109	6' - 0"	7' - 0"	1 3/4"	P20	P20	HM	F00	HM	0		INSULATED SLAB WITH SOUND PROOF GLAZING
109A	6' - 0"	7' - 0"	1 3/4"	P20	P20	HM	F00	HM	0		INSULATED SLAB WITH SOUND PROOF GLAZING
110	3' - 0"	7' - 0"	1 3/4"	P01		HM	F00	HM	0		INSULATED SLAB WITH SOUND PROOF GLAZING
110A	3' - 0"	7' - 0"	1 3/4"	P20		HM	F00	HM	0		INSULATED SLAB WITH SOUND PROOF GLAZING
112	3' - 0"	7' - 0"	1 3/4"	P20		HM	F22.2	HM	0		INSULATED SLAB WITH SOUND PROOF GLAZING
112A	3' - 0"	7' - 0"	1 3/4"	P20		HM	F22.1A : .	HM	0		INSULATED SLAB WITH SOUND PROOF GLAZING

ISSUED IN PREVIOUS PHASE

DOOR AND FRAME SCHEDULE-PHASE 4

DOOR NUMBER	DOOR SIZE WIDTH	DOOR SIZE HEIGHT	DOOR THICK	DOOR LEAF 1 TYPE	DOOR LEAF 2 TYPE	DOOR MATERIAL	FRAME TYPE	FRAME MATERIAL	FIRE RATING (MINUTES)	HARDWARE GROUP	NOTES*
OPERATING FLOOR											
100	3' - 0"	7' - 0"	1 3/4"	P30		Aluminum	AL1	Aluminum	0		
100A	2' - 0"	7' - 0"	1 3/4"	P30		Aluminum	"	Aluminum	0		
101	3' - 0"	7' - 0"	1 3/4"	P30		Aluminum	AL1	Aluminum	0		
101A	2' - 0"	7' - 0"	1 3/4"	P30		Aluminum	"	Aluminum	0		
102	3' - 0"	7' - 0"	1 3/4"	P20		HM	F00	HM	0		USE DOOR 109A FROM PH. 3 PR. #5
103	3' - 0"	7' - 0"	1 3/4"	P20		HM	F21	HM	0		USE DOOR 109A FROM PH. 3 PR. #5
106	3' - 0"	7' - 0"	1 3/4"	P20		HM	F21	HM	0		
114	3' - 0"	7' - 0"	1 3/4"	P00		HM	F00	HM	0		
115	2' - 8"	7' - 0"	1 3/4"	P00		HM	F00	HM	0		
119	3' - 0"	7' - 0"	1 3/4"	P00		HM	F00	HM	0		
PIPING FLOOR											
201	3' - 0"	7' - 0"	1 3/4"	P00		HM	F00	HM	0		

GLAZING SCHEDULE

G-1 GLAZING TYPE

G-1	FLOAT GLASS
G-1T	FLOAT GLASS - TEMPERED
G-2	INSULATED GLASS U-VALUE 0.22, SHGC 0.39
G-2T	INSULATED GLASS - TEMPERED U-VALUE 0.22, SHGC 0.39
G-3	LAMINATED SOUND GLASS
G-3T	LAMINATED SOUND GLASS - TEMPERED

ALL INSULATED GLASS TO BE SOLARBAN 60 W/ A U-FACTOR OF 0.22 AND SHGC 0.39 OR BETTER

FFKR ARCHITECTS
730 Pacific Avenue · Salt Lake City, Utah 84104
O 801.521.6186 · FFKR.COM

U OF U BLDG. 303 SEISMIC UPGRADE PROJECT #22508 - PHASE 4 VE
SALT LAKE CITY UTAH
CONSTRUCTION SET - 10-10-2022

STATE OF UTAH · JACKSON FERGUSON, AIA · #330047-0301 · LICENSED ARCHITECT · 10.10.22

△	DATE	REVISION
4	10-27-21	Ph. 3 PR #5
6	3-30-22	Phase 4 RC #1
10	Date 10	Prev phase

PROJECT NUMBER 18136

DOORS AND WINDOW SCHEDULE

AE-601

10/10/2022 2:02:31 PM

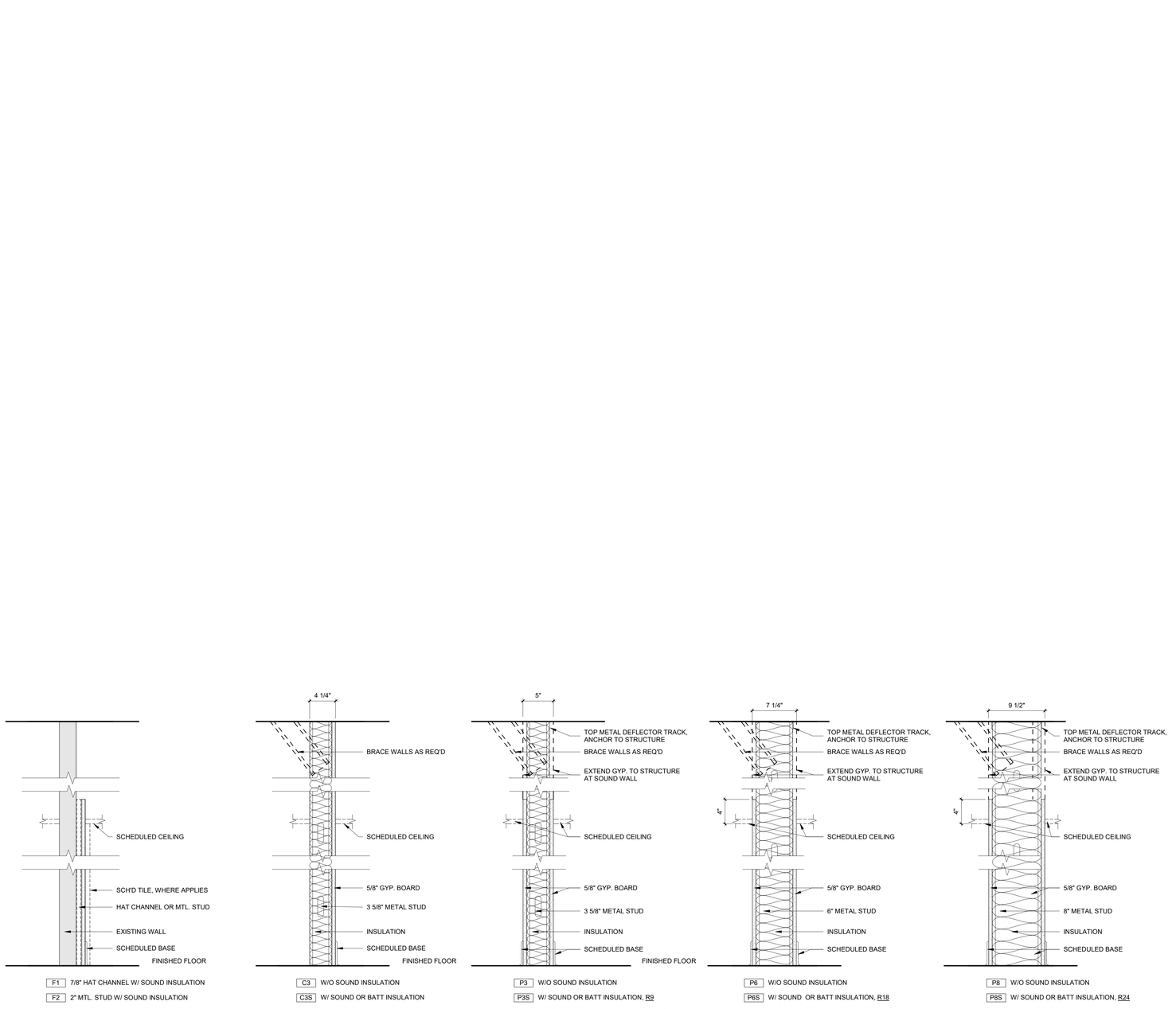

F1 7/8" HAT CHANNEL W/ SOUND INSULATION
F2 2" MTL. STUD W/ SOUND INSULATION

C3 W/O SOUND INSULATION
C3S W/ SOUND OR BATT INSULATION

P3 W/O SOUND INSULATION
P3S W/ SOUND OR BATT INSULATION, R9
P3SI W/ SOUND OR BATT INSULATION, R9, HIGH IMPACT RESISTANT GYP. ON ONE SIDE
P3ST W/SOUND OR BATT INSULATION, R9, TILE ON ONE SIDE
P3ST2 W/SOUND OR BATT INSULATION, R9, TILE ON BOTH SIDE

P6 W/O SOUND INSULATION
P6S W/ SOUND OR BATT INSULATION, R18
P6SI W/ SOUND OR BATT INSULATION, R18, HIGH IMPACT RESISTANT GYP. ON ONE SIDE

P8 W/O SOUND INSULATION
P8S W/ SOUND OR BATT INSULATION, R24

A3 PARTITION TYPES
SCALE: 1 1/2" = 1'-0"

FFKR ARCHITECTS
730 Pacific Avenue · Salt Lake City, Utah 84104
O 801.521.6186 · FFKR.COM

U OF U BLDG. 303 SEISMIC UPGRADE PROJECT #22508 - PHASE 4 VE
SALT LAKE CITY UTAH
CONSTRUCTION SET - 10-10-2022

STATE OF UTAH
JACKSON FERGUSON, AIA
#5340647-0301
LICENSED ARCHITECT
10.10.22

△	DATE	REVISION
6	3-30-22	Phase 4 RC #1
8	4-15-22	Phase 4 RC #2

PROJECT NUMBER 18136

PARTITION TYPES & DETAILS

AE-602

10/10/2022 2:02:32 PM

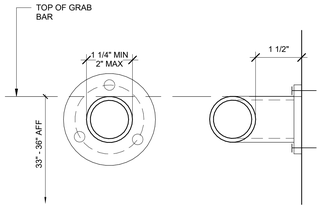

NOTE: ALLOWABLE STRESSES SHALL NOT BE EXCEEDED FOR MATERIALS USED WHERE A VERTICAL OR HORIZONTAL FORCE OF 250 LBS. IS APPLIED AT ANY POINT ON THE GRAB BAR, FASTENER MOUNTING DEVICE OR SUPPORTING STRUCTURE.

REF:
ADA: 609.1
ANSI: 609.2

C5 GRAB BAR
SCALE: 6" = 1'-0"

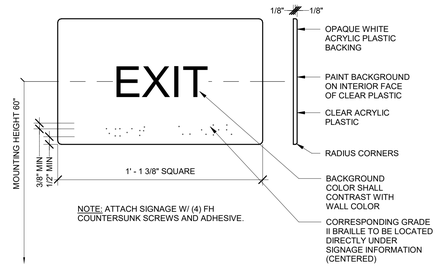

C6 TACTILE SIGNAGE
SCALE: 3" = 1'-0"

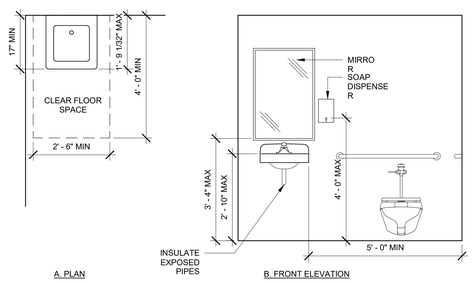

A. PLAN

B. FRONT ELEVATION

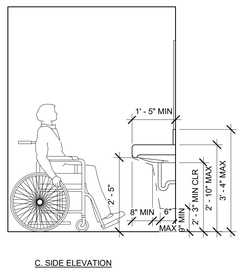

C. SIDE ELEVATION

REF:
ADA: 603.3, 604.3.2, 606.1, 606.5
ANSI: 606.1

B1 ACCESSIBLE LAVATORY
SCALE: 1/2" = 1'-0"

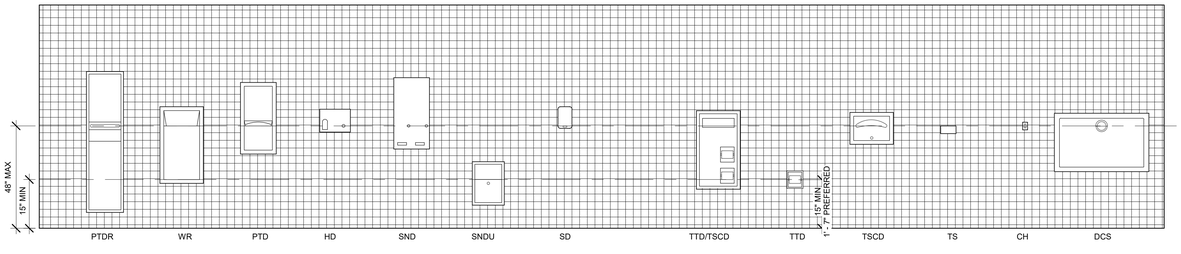

REF:
ADA: 308.2.1,604.7
ANSI: 604.7

SANITARY ACCESSORIES LIST

ABBREVIATIONS	DESCRIPTIONS
CH	COAT HOOK
DCS	DIAPER CHANGING STATION
HD	HAND DRYER
PTD	PAPER TOWEL DISPENSER
PTDR	PAPER TOWEL DISPENSER/WASTE RECEPTACLE
SD	SOAP DISPENSER
SND	SANITARY NAPKIN DISPENSER
SNDU	SANITARY NAPKIN DISPOSAL UNIT
SS	SHOWER SEAT
TS	TOILETRY SHELF
TTD	TOILET TISSUE DISPENSER
TSCD	TOILET SEAT COVER DISPENSER
TTD/TSCD	TOILET TISSUE DISPENSER/TOILET SEAT COVER DISPENSER
WR	WASTE RECEPTACLE

B3 MOUNTING HEIGHTS - SANITARY ACCESSORIES
SCALE: 1/2" = 1'-0"

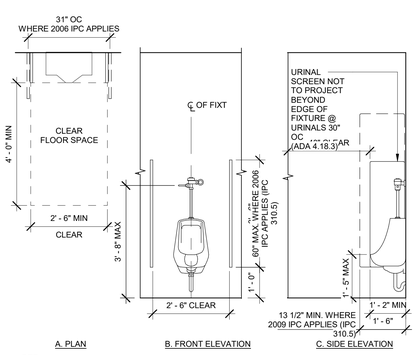

A. PLAN — B. FRONT ELEVATION — C. SIDE ELEVATION

REF:
ADA: 605.1
IPC: 310.5
ANSI: 605.1

A1 ACCESSIBLE URINAL
SCALE: 1/2" = 1'-0"

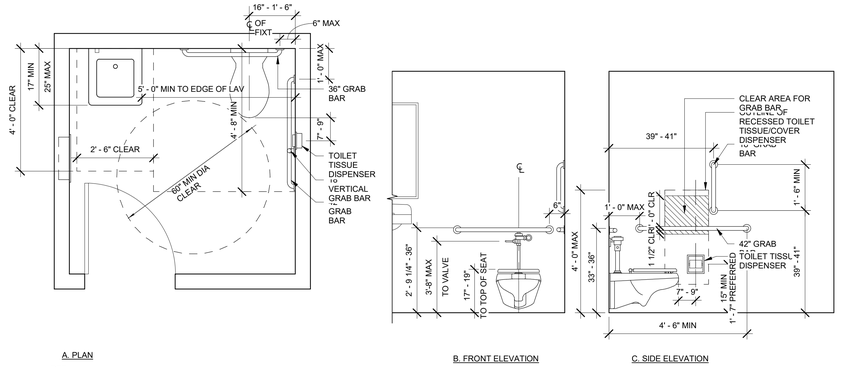

A. PLAN — B. FRONT ELEVATION — C. SIDE ELEVATION

REF:
ADA: 603.2, 604.2, 604.3.2, 604.7, 604.8, 609.1
ANSI: 604.4

A2 SINGLE-ACCOMODATION TOILET ROOM
SCALE: 1/2" = 1'-0"

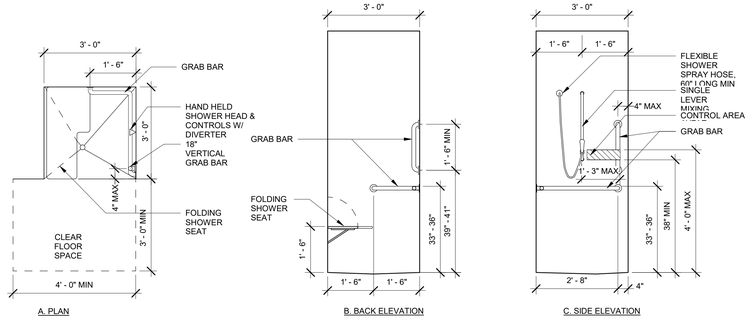

A. PLAN — B. BACK ELEVATION — C. SIDE ELEVATION

REF:
ADA: 608.2.1
ANSI: 608.2.1

A5 ACCESSIBLE SHOWER - TRANSFER TYPE
SCALE: 1/2" = 1'-0"

FFKR ARCHITECTS
730 Pacific Avenue · Salt Lake City, Utah 84104
O 801.521.6186 · FFKR.COM

U OF U BLDG. 303 SEISMIC UPGRADE PROJECT #22508 - PHASE 4 VE

SALT LAKE CITY UTAH

CONSTRUCTION SET - 10-10-2022

JACKSON FERGUSON, AIA #530047-2301 LICENSED ARCHITECT
10.10.22

△	DATE	REVISION
6	3-30-22	Phase 4 RC #1

PROJECT NUMBER 18136

ADA RESTROOM ACCESS & SIGNAGE DIAGRAMS

AE-603

10/10/2022 2:02:33 PM

STRUCTURAL NOTES :

A. GENERAL

1. THE STRUCTURAL NOTES ARE INTENDED TO COMPLEMENT THE PROJECT SPECIFICATIONS WHICH ARE PART OF THE CONSTRUCTION DOCUMENTS. SPECIFIC NOTES AND DETAILS ON THE DRAWINGS SHALL GOVERN OVER THE STRUCTURAL NOTES AND TYPICAL DETAILS.
2. THESE DRAWINGS (AND, WHERE APPLICABLE, ACCOMPANYING WRITTEN SPECIFICATIONS) ARE THE ONLY CONTRACT DOCUMENTS PROVIDED BY ARW ENGINEERS FOR THE PROJECT REPRESENTED HEREIN. NOTHING IN ANY DIGITAL MODEL OR DIGITAL FILE RELATED TO THIS PROJECT SHALL BE TAKEN TO SUPERSEDE ANY INFORMATION SHOWN IN THESE DRAWINGS (INCLUDING, BUT NOT LIMITED TO, DIMENSIONS, SIZES, ETC).
3. THE ARCHITECTURAL DRAWINGS ARE THE PRIME CONTRACT DRAWINGS. THE STRUCTURAL DRAWINGS ARE SUPPLEMENTARY TO AND MUST BE USED IN CONJUNCTION WITH THE ARCHITECTURAL DRAWINGS AND OTHER CONSULTANTS DRAWINGS. ALL OMISSIONS OR CONFLICTS BETWEEN THE VARIOUS ELEMENTS OF THE WORKING DRAWINGS AND/OR SPECIFICATIONS SHALL BE BROUGHT TO THE ATTENTION OF THE ARCHITECT AND STRUCTURAL ENGINEER BEFORE PROCEEDING WITH ANY WORK INVOLVED. IN CASE OF CONFLICT, FOLLOW THE MOST STRINGENT REQUIREMENT AS DIRECTED BY THE ARCHITECT AT NO ADDITIONAL COST TO THE OWNER.
4. SEE SPECIFICATIONS FOR REQUIRED SUBMITTALS. SUBMITTALS SHALL BE MADE IN A TIMELY MANNER AS INDICATED IN SPECIFICATIONS. REVIEW OF SUBMITTALS BY ARW ENGINEERS IS FOR GENERAL COMPLIANCE ONLY AND IS NOT INTENDED AS APPROVAL. CONTRACTOR IS RESPONSIBLE FOR VERIFYING ALL SIZES, DIMENSIONS, AND ELEVATIONS ON SUBMITTALS AS RELATED TO DESIGN DOCUMENTS. PREPARATION OF SHOP DRAWINGS FOR STRUCTURAL ELEMENTS WILL REQUIRE INFORMATION (I.E. DIMENSIONS, ETC.) FOUND IN THE ARCHITECTURAL, STRUCTURAL, AND OTHER CONSULTANTS DRAWINGS.
5. THE CONTRACTOR SHALL VERIFY ALL CONDITIONS AND DIMENSIONS AT THE SITE. IF ACTUAL CONDITIONS DIFFER FROM THOSE SHOWN ON CONTRACT DOCUMENTS, CONTRACTOR SHALL NOTIFY ARCHITECT PRIOR TO FABRICATION OR CONSTRUCTION OF ANY AFFECTED ELEMENTS.
6. THE CONTRACTOR SHALL COORDINATE AND VERIFY ALL LOCATIONS AND SIZES OF MECHANICAL EQUIPMENT OR OTHER EQUIPMENT REQUIRING OPENINGS AND FRAMING STRUCTURAL ELEMENTS. SIZES AND LOCATIONS THAT DIFFER FROM THOSE SHOWN ON THE CONTRACT DOCUMENTS SHALL BE REPORTED TO THE ARCHITECT.
7. THE CONTRACTOR SHALL SUBMIT A WRITTEN REQUEST TO THE ARCHITECT FOR ARCHITECT AND/OR ENGINEER APPROVAL BEFORE PROCEEDING WITH ANY CHANGES, MODIFICATIONS, OR SUBSTITUTIONS.
8. OBSERVATION VISITS TO THE SITE BY ARW ENGINEERS FIELD REPRESENTATIVES SHALL NEITHER BE CONSTRUED AS INSPECTION NOR APPROVAL OF CONSTRUCTION.
9. DURING AND AFTER CONSTRUCTION, BUILDER AND/OR OWNER SHALL KEEP LOADS ON STRUCTURE WITHIN THE LIMITS OF DESIGN LOADS AS NOTED ON THESE DOCUMENTS.
10. TYPICAL OR SIMILAR DETAILS AND SECTIONS SHALL APPLY WHERE SPECIFIC DETAILS ARE NOT SHOWN. TYPICAL OR SIMILAR DETAILS REFER TO THE CONDITION ADDRESSED AND ARE NOT NECESSARILY DETAILS LABELED "TYPICAL" OR "SIMILAR" IN THE PLANS AND DOCUMENTS.
11. DRAWINGS AND DETAILS HAVE BEEN PREPARED WITH THE INTENT TO VISUALLY REPRESENT INFORMATION PROVIDED IN SCALED FORM. CONTRACTOR/SUPPLIERS SHOULD NOT SCALE PLANS OR DETAILS FOR DIMENSIONAL INFORMATION.
12. THE CONTRACTOR SHALL PROVIDE ADEQUATE TEMPORARY SHORING AND BRACING FOR ALL STRUCTURAL ELEMENTS UNTIL THE ENTIRE STRUCTURAL SYSTEM IS COMPLETED. DESIGN OF ALL SHORING AND BRACING IS BY OTHERS AT NO ADDITIONAL COST TO THE OWNER.
13. ENGINEER SHALL NOT BE RESPONSIBLE FOR ACTIVITIES UNDER CONTROL OF THE CONTRACTOR SUCH AS CONSTRUCTION SITE SAFETY, MEANS, METHODS AND SEQUENCING OF CONSTRUCTION. ENGINEER SHALL NOT BE RESPONSIBLE FOR FABRICATION, ERECTION AND CONSTRUCTION REQUIREMENTS AS PRESCRIBED BY OSHA OR OTHER REGULATORY AGENCIES REGARDLESS OF INDICATIONS IN THESE DOCUMENTS.
14. NOTICE OF COPYRIGHT: THESE STRUCTURAL DRAWINGS ARE HEREBY COPYRIGHTED BY ARW ENGINEERS, ALL RIGHTS RESERVED. THESE DOCUMENTS DEFINE A STRUCTURE AND ARE INSTRUMENTS OF SERVICE. PERMISSION FOR REPRODUCTION AND DISTRIBUTION OF THESE DRAWINGS IS ONLY ALLOWED AS REQUIRED FOR REGULATORY AGENCIES AND FOR CONVEYANCE OF INFORMATION TO PARTIES INVOLVED IN THE CONSTRUCTION OF THIS PROJECT. THESE DOCUMENTS SHALL NOT BE REPRODUCED OR COPIED, IN PART OR WHOLE BY ANY PARTY FOR USE IN PREPARATION OF SHOP DRAWINGS OR OTHER SUBMITTALS.

B. STATEMENT OF SPECIAL INSPECTIONS AND SPECIAL INSPECTIONS

1. THE DESIGNATED SEISMIC/WIND SYSTEMS AND SEISMIC/WIND-FORCE-RESISTING SYSTEMS THAT ARE SUBJECT TO SPECIAL INSPECTIONS IN ACCORDANCE WITH IBC SECTION 1705.11 AND 1705.12 ARE IDENTIFIED ON THESE DOCUMENTS WITH A CIRCLE "L". ALL OTHER ITEMS REQUIRING SPECIAL INSPECTION ARE IDENTIFIED IN THE SPECIAL INSPECTION SCHEDULE ON SHEETS SG-003 AND SG-004.
2. SPECIAL INSPECTIONS AND TESTING ARE TO BE PROVIDED AS REQUIRED BY IBC SECTIONS 1704 THROUGH 1705 AND OTHER APPLICABLE SECTIONS OF THE IBC. THE TYPE AND FREQUENCY OF TESTING AND SPECIAL INSPECTIONS SHALL BE AS NOTED IN THE SPECIAL INSPECTION SCHEDULE, JOB SPECIFICATIONS, AND ACCORDANCE WITH IBC SECTION 110 AND CHAPTER 17. CONTRACTOR SHALL COORDINATE AND COOPERATE WITH REQUIRED INSPECTIONS.
3. ALL TESTING AND SPECIAL INSPECTION SHALL BE PROVIDED BY A QUALIFIED INDEPENDENT SPECIAL INSPECTION AGENCY IN ACCORDANCE WITH IBC 1704 AND AS OUTLINED IN THE JOB SPECIFICATIONS. REPORTS OF FINDINGS OR DISCREPANCIES SHALL BE NOTED AND FORWARDED TO THE CONTRACTOR, ARCHITECT, ENGINEERS, AND BUILDING OFFICIAL IN A TIMELY MANNER.
4. STRUCTURAL OBSERVATION VISITS SHALL BE PERFORMED BY A REPRESENTATIVE FROM ARW ENGINEERS IN ACCORDANCE WITH THE CONTRACT AS NEEDED TO OBSERVE THE CONSTRUCTION OF CRITICAL BUILDING ELEMENTS (I.E. FOOTINGS, BRACED FRAMES, MOMENT FRAMES, DRAG STRUTS AND THEIR CONNECTIONS, COLLECTORS, AND ROOF AND FLOOR DIAPHRAGMS). STRUCTURAL OBSERVATION REPORTS FOR EACH VISIT SHALL BE SENT DIRECTLY TO THE ARCHITECT FOR DISTRIBUTION TO THE CONTRACTOR AND BUILDING OFFICIAL. STRUCTURAL OBSERVATION VISITS SHALL NEITHER BE CONSTRUED AS SPECIAL INSPECTION NOR APPROVAL OF COMPLETED CONSTRUCTION.
5. IN ACCORDANCE WITH IBC 1704.4, THE CONTRACTOR SHALL SUBMIT A WRITTEN CONTRACTOR'S STATEMENT OF RESPONSIBILITY TO THE BUILDING OFFICIAL AND OWNER. THE STATEMENT SHALL BE SUBMITTED PRIOR TO THE CONSTRUCTION OF ANY SEISMIC/WIND-FORCE-RESISTING SYSTEM, DESIGNATED SEISMIC/WIND SYSTEM, OR COMPONENT IDENTIFIED IN THESE DOCUMENTS WITH A CIRCLE "L".

C. BASIS OF DESIGN

1. GOVERNING BUILDING CODE : INTERNATIONAL BUILDING CODE (IBC) 2018
   RISK CATEGORY : III
2. SUSPENDED FLOOR LOADS
   a. LIVE LOAD = 125 PSF
   b. DEAD LOAD = SEE KEY PLAN
3. ROOF LOADS
   a. FLAT ROOF SNOW LOAD, P_f: 36 PSF
      1. GROUND SNOW LOAD, P_g: 47 PSF
      2. SNOW EXPOSURE FACTOR, C_e: 1.0
      3. SNOW LOAD IMPORTANCE FACTOR, I_s: 1.1
      4. THERMAL FACTOR, C_t: 1.0
   b. LIVE LOAD = 20 PSF
   c. DEAD LOAD = 25 PSF
4. WIND DESIGN
   a. BASIC WIND SPEED (3 SECOND GUST) : 109 MPH
   b. WIND EXPOSURE : C
   c. COMPONENT AND CLADDING DESIGN WIND PRESSURE SHALL BE AS REQUIRED PER ASCE 7-16.
5. SEISMIC DESIGN :
   a. SEISMIC IMPORTANCE FACTOR, I_E : 1.25
   b. SITE CLASS : C
   c. MAPPED SPECTRAL RESPONSE ACCELERATIONS : S_S = 1.307 , S_1 = 0.484
   d. SPECTRAL RESPONSE COEFFICIENTS : S_{DS} = 1.045 , S_{D1} = 0.484
   e. SEISMIC DESIGN CATEGORY : D
   f. BASIC SEISMIC-FORCE-RESISTING SYSTEM : BUCKLING RESTRAINED BRACED FRAMES
   g. DESIGN BASE SHEAR : $V_{MS} = C_S\,W$, $V_{EW} = C_S\,W$
   h. SEISMIC RESPONSE COEFFICIENT, C_S : 0.16
   i. RESPONSE MODIFICATION FACTOR, R : 8
   j. ANALYSIS PROCEDURE : LINEAR DYNAMIC ANALYSIS

D. FOUNDATION

1. DESIGN SOIL PRESSURE : 3500 PSF
2. SOILS REPORT BY : AGEC APPLIED GEOTECH
   PROJECT # : 1180667
   DATED : DECEMBER 21, 2018
3. SOIL PREPARATION UNDER FOOTINGS AND SLABS-ON-GRADE SHALL BE IN ACCORDANCE WITH THE SOILS REPORT.
4. TOP OF FOOTING ELEVATIONS SHOWN ON THE FOOTING AND FOUNDATION PLAN ARE BASED ON PRELIMINARY GRADING INFORMATION AND MUST BE VERIFIED PRIOR TO CONSTRUCTION. STEPS WHERE SHOWN ARE AT APPROXIMATE LOCATIONS. ALL EXTERIOR FOOTINGS MUST BEAR A MINIMUM OF 30 INCHES BELOW LOWEST ADJACENT FINAL GRADE.
5. ALL WALLS (EXCEPT CANTILEVERED RETAINING WALLS) SHALL BE ADEQUATELY BRACED AGAINST LATERAL MOVEMENT PRIOR TO BACKFILLING. DESIGN AND ERECTION OF BRACING/SHORING IS THE RESPONSIBILITY OF THE GENERAL CONTRACTOR. BRACING SHALL REMAIN IN PLACE UNTIL SUPPORTING STRUCTURAL ELEMENTS ARE IN PLACE AND HAVE ATTAINED FULL STRENGTH.
6. UNLESS NOTED OTHERWISE, ALL FOOTINGS AT COLUMNS TO BE CENTERED BELOW COLUMNS.
   a. UNLESS NOTED OTHERWISE, ALL FOOTINGS SHALL HAVE VERTICAL FACES FORMED WITH STANDARD FORMING MATERIALS (WOOD, METAL, ETC.). WITH PRIOR APPROVAL OF ARCHITECT AND ENGINEER, CONCRETE FOR FOOTINGS CAN BE PLACED IN EXCAVATED "SOIL" FORMS PROVIDED THAT THE DIMENSIONS ARE INCREASED 3" ON EACH SIDE.
7. MICRO-PILE FOUNDATIONS
   a. MICRO-PILE FOUNDATIONS AND THEIR COMPONENTS SHALL BE CONSIDERED A "PILE FOUNDATION" AND SHALL BE SUBJECT TO CONTINUOUS SPECIAL INSPECTION AS REQUIRED BY THE SPECIAL INSPECTION SCHEDULE FOR PILE FOUNDATIONS AND PER IBC CHAPTER 17.
   b. MICRO-PILE FOUNDATION SYSTEMS SHALL BE DESIGNED BY A LICENSED ENGINEER TO RESIST THE LOADS SHOWN ON THE PLANS AND SCHEDULES AND IN ACCORDANCE WITH THE SOILS REPORT AND SPECIFICATIONS PROVIDED BY THE GEOTECHNICAL ENGINEER. SEE SPECIFICATIONS FOR ADDITIONAL INFORMATION CONCERNING REQUIREMENTS FOR DESIGN, TESTING, AND INSTALLATION OF MICRO-PILE FOUNDATIONS.
   c. THE NUMBER AND LOCATION OF MICRO-PILES IS SHOWN SCHEMATICALLY ON THE PLANS. MICRO-PILE SUPPLIER IS RESPONSIBLE FOR DETERMINING THE ACTUAL NUMBER AND SIZES OF PILES REQUIRED TO RESIST THE LOADS SHOWN ON THE PLANS AND SCHEDULES. LOADS SHOWN ARE BASED ON ALLOWABLE/DESIGN LEVEL FORCES.
   d. ALL MICRO-PILES SHALL BE PLACED IN UNDISTURBED SOIL TO A MINIMUM DEPTH AS REQUIRED TO REACH THE SPECIFIED LOAD REQUIREMENTS NOTED ON THE PLANS, BUT NO LESS THAN 20 FEET BELOW THE BOTTOM OF THE BASEMENT FOOTINGS.

E. CONCRETE

1. ALL CONCRETE MIX DESIGNS SHALL COMPLY WITH THE PROJECT SPECIFICATIONS AND THE REQUIREMENTS LISTED BELOW :
   a. FOOTINGS, FOUNDATION WALLS :
      1. 28 DAY COMPRESSIVE STRENGTH : 4500 PSI
   b. INTERIOR SLABS ON GRADE (EXPOSURE CATEGORY F0) :
      1. 28 DAY COMPRESSIVE STRENGTH : 3000 PSI
   c. EXTERIOR SLABS (DOCKS, ETC.) (EXPOSURE CATEGORY F1) :
      1. 28 DAY COMPRESSIVE STRENGTH : 4500 PSI
      2. MAXIMUM W/C RATIO : 0.45
      3. MAXIMUM AGGREGATE SIZE : 1"
      4. MINIMUM AIR CONTENT : 4.5% +/- 1.5%
   d. INTERIOR SUSPENDED SLABS ON METAL DECK (EXPOSURE CATEGORY F0) :
      1. 28 DAY COMPRESSIVE STRENGTH : 4500 PSI
   e. PILE CAPS AND GRADE BEAMS (EXPOSURE CATEGORY F0) :
      1. 28 DAY COMPRESSIVE STRENGTH : 6000 PSI
2. WATER USED IN MIXING CONCRETE SHALL CONFORM TO ASTM C1602.
3. NO PIPES, DUCTS, SLEEVES, ETC. SHALL BE PLACED IN STRUCTURAL CONCRETE UNLESS SPECIFICALLY DETAILED OR APPROVED BY THE STRUCTURAL ENGINEER. NO ALUMINUM PRODUCTS SHALL BE EMBEDDED IN CONCRETE. PENETRATIONS THRU STRUCTURAL CONCRETE ELEMENTS MUST BE APPROVED BY THE ENGINEER AND SHALL BE BUILT INTO THE ELEMENT PRIOR TO CONCRETE PLACEMENT.
4. REFER TO ARCHITECTURAL DRAWINGS FOR MOLDS, GROOVES, ORNAMENTS, ETC. TO BE CAST IN TO CONCRETE, AND FOR EXTENT AND LOCATION OF DEPRESSIONS, CURBS, RAMPS, ETC.
5. UNLESS NOTED OTHERWISE, MINIMUM REINFORCING IN ALL CONCRETE FOUNDATION WALLS SHALL BE AS FOLLOWS:

THICKNESS	TOP & BOTTOM BARS	VERTICAL	HORIZONTAL
12"	(2) #5	#5 AT 18"O.C. EA. FACE	#5 AT 18"O.C. EA. FACE
15"	(2) #5	#5 AT 18"O.C. EA. FACE	#5 AT 18"O.C. EA. FACE

6. UNLESS NOTED OTHERWISE, CONCRETE SLABS ON EARTH SHALL BE REINFORCED AS FOLLOWS:
   4" THICK - #3 AT 18"O.C. EACH WAY
   REINFORCING SHALL BE CONTINUOUSLY SUPPORTED AT 36"O.C. MAXIMUM SPACING.
7. UNLESS NOTED OTHERWISE, FOR NON-DETAILED OPENINGS IN CONCRETE WALLS LARGER THAN 12" AND SMALLER THAN 24" IN ANY DIRECTION ADD (2) #5 BARS ON ALL SIDES IN ADDITION TO REGULAR WALL REINFORCING AND EXTEND 24" EACH WAY BEYOND OPENING. IF 24" IS NOT AVAILABLE ON EVERY SIDE, NOTIFY STRUCTURAL ENGINEER FOR FURTHER DIRECTION. OPENINGS SHALL HAVE A MINIMUM OF 12" OF CONCRETE ABOVE THE OPENING, TYP.
8. CONSTRUCTION JOINTS NOT SHOWN ON THE PLANS SHALL BE MADE AND LOCATED SO AS TO NOT IMPAIR THE STRENGTH OF THE STRUCTURE AND AS APPROVED BY THE STRUCTURAL ENGINEER. PROVIDE 2 X 4 (SHAPED) KEYWAY IN ALL VERTICAL AND HORIZONTAL JOINTS UNLESS NOTED OR DETAILED OTHERWISE. ALL STEEL REINFORCING SHALL BE CONTINUOUS THROUGH COLD JOINTS UNLESS NOTED OTHERWISE. SEE TYPICAL DETAILS FOR COLD/CONSTRUCTION JOINTS FOR SLABS ON GRADE.
9. WHERE NEW CONCRETE IS PLACED AGAINST PREVIOUSLY HARDENED CONCRETE, THE JOINT SHALL BE CLEAN AND FREE OF LAITANCE. IMMEDIATELY BEFORE NEW CONCRETE IS PLACED, CONSTRUCTION JOINTS SHALL BE PREWETTED AND STANDING WATER REMOVED. WHERE NOTED IN SPECIFIC DETAILS, HARDENED CONCRETE SHALL BE ROUGHENED TO AN AMPLITUDE AND A BONDING AGENT SHALL BE APPLIED TO THE JOINT PRIOR TO PLACING NEW CONCRETE.

F. ANCHOR BOLTS/EMBEDDED BOLTS

1. ALL ANCHOR BOLTS SHALL HAVE ASTM A-563 HEAVY HEX NUT AND ASTM F-436 WASHERS AT STANDARD OR OVERSIZED HOLES PER AISC SPECIFICATION TABLE J3.3. WHERE HOLE SIZES DO NOT COMPLY WITH THE LIMITATIONS FOR OVERSIZED HOLES THE STRUCTURAL ENGINEER SHALL BE NOTIFIED TO DETERMINE STEEL PLATE WASHER REQUIREMENTS. ANCHOR BOLTS SHALL COMPLY WITH THE FOLLOWING:
   a. AT BRACED FRAMES - ASTM F1554 GRADE 105 HEADED BOLTS.(ASTM A449 THREADED ROD MAY BE USED WITH DOUBLE NUT AND WASHER.)
   b. AT ALL OTHER ANCHOR BOLTS (UNLESS NOTED OTHERWISE) - ASTM F1554 GRADE 36 HEADED BOLTS. (ASTM A36 THREADED ROD MAY BE USED WITH DOUBLE NUT AND WASHER.)
2. SEE TYPICAL ANCHOR BOLT DETAIL FOR DEFINITIONS OF EMBEDMENT LENGTH, ETC.
3. FURNISH TEMPLATES AND OTHER DEVICES AS NECESSARY FOR PRESETTING ALL BOLTS PRIOR TO PLACING CONCRETE OR GROUT.
4. IF THREADED RODS ARE USED AS PERMITTED ABOVE, THEY SHALL BE CLEAR OF SOIL AND DIRT.
5. WHERE REQUIRED FOR ERECTION, HOLES LARGER THAN OVERSIZED MAY BE PERMITTED WITH THE USE OF STEEL PLATE WASHERS AT THE DISCRETION OF THE STRUCTURAL ENGINEER.

G. ADHESIVE/MECHANICAL ANCHORS

1. ALL ADHESIVE/MECHANICAL ANCHORS SHALL BE INSTALLED, INCLUDING HOLE DRILLING AND PREPARATION, IN ACCORDANCE WITH AN APPROVED INDEPENDENT EVALUATION REPORT (ICC-ES, IAPMO, OR APPROVED EQUAL), AS INDICATED BELOW, AND IN ACCORDANCE WITH ALL MANUFACTURER'S PRINTED INSTALLATION INSTRUCTIONS (MPII).
2. ADHESIVE ANCHORS SHALL BE INSTALLED IN CONCRETE HAVING A MINIMUM AGE OF 21 DAYS AT THE TIME OF ANCHOR INSTALLATION. ADHESIVE ANCHORS SHALL NOT BE FULLY LOADED UNTIL CONCRETE HAS REACHED DESIGN STRENGTH.
3. UNLESS APPROVED BY THE ENGINEER OF RECORD, CONCRETE AND DRILLED ANCHOR HOLES SHALL BE DRY AND FREE OF WATER FOR 24 HOURS PRIOR TO ADHESIVE INSTALLATION. CONTACT THE ENGINEER OF RECORD FOR GUIDANCE IF THE CONTRACTOR CHOOSES TO INSTALL IN WET OR DAMP HOLES.
4. CONCRETE TEMPERATURE AT THE TIME OF INSTALLATION SHALL BE MONITORED BY THE CONTRACTOR. CONTRACTOR SHALL COMPLY WITH ALL MANUFACTURER'S PRINTED INSTALLATION INSTRUCTIONS (MPII) RELATIVE TO SUBSTRATE TEMPERATURE.
5. INSTALLATION OF ADHESIVE ANCHORS HORIZONTALLY OR UPWARDLY INCLINED TO SUPPORT SUSTAINED TENSION LOADS SHALL BE PERFORMED BY PERSONNEL CERTIFIED BY AN APPLICABLE CERTIFICATION PROGRAM. CERTIFICATION SHALL INCLUDE WRITTEN AND PERFORMANCE TESTS IN ACCORDANCE WITH THE ACI/CRSI ADHESIVE ANCHOR INSTALLER CERTIFICATION PROGRAM, OR EQUIVALENT IN ACCORDANCE WITH ACI 318-11 D.9.2.2. PROOF OF CURRENT CERTIFICATION SHALL BE SUBMITTED TO THE ENGINEER FOR APPROVAL PRIOR TO INSTALLATION. CONTINUOUS SPECIAL INSPECTION SHALL BE PROVIDED FOR THESE ANCHORS.
6. UNLESS NOTED OTHERWISE, ALL ADHESIVE ANCHORS INTO CONCRETE SHALL BE:
   a. HILTI HIT-RE 500V3 (ESR-3814), OR HILTI HIT-HY 200 (ESR-3187).
   b. SIMPSON SET-XP (ESR-4057), OR AT-XP (ESR-4263).
   c. DEWALT PURE 110+ (ESR-3298), OR AC200+ GOLD (ESR-4027-COLD WEATHER).
7. UNLESS NOTED OTHERWISE, ALL ADHESIVE ANCHORS INTO MASONRY SHALL BE:
   a. HILTI HIT-HY-70 (ESR-2682).
   b. SIMPSON SET-XP (ER-0265), OR AT-XP (ER-0281).
   c. DEWALT AC100+ GOLD (ESR-3200).
8. UNLESS NOTED OTHERWISE, ALL MECHANICAL ANCHORS INTO CONCRETE SHALL BE:
   a. HILTI KWIK BOLT TZ (ESR-1917).
   b. DEWALT POWER STUD+ SD2 (ESR-2502).
   c. SIMPSON STRONG-BOLT 2 (ESR-3037).
9. UNLESS NOTED OTHERWISE, ALL MECHANICAL ANCHORS INTO MASONRY SHALL BE:
   a. HILTI KWIK HUS-EZ (ESR-3056).
   b. SIMPSON STRONG BOLT 2 WEDGE ANCHOR (ER-0240).
   c. DEWALT POWER STUD+ SD1 (ESR-2966), DEWALT SCREWBOLT+ (ESR-1678).
10. UNLESS NOTED OTHERWISE, ALL SCREW ANCHORS INTO CONCRETE SHALL BE:
    a. SIMPSON TITEN HD (ESR-2713).
    b. DEWALT SCREWBOLT+ (ESR-2526).
    c. HILTI KWIK HUS-EZ (ESR-3027).
11. UNLESS NOTED OTHERWISE, ALL SCREW ANCHORS INTO MASONRY SHALL BE:
    a. SIMPSON TITEN HD (ESR-1056).
    b. DEWALT SCREWBOLT+ (ESR-1678).
    c. HILTI KWIK HUS EZ (ESR-3056).
12. ALL MASONRY CELLS WITHIN 8" OF THE ANCHOR SHALL BE SOLID GROUTED.
13. THE TESTING LABORATORY WILL PERFORM VISUAL INSPECTION OF ANCHORS AND DOWELS AS SPECIFIED IN THE SPECIAL INSPECTION SCHEDULE AND THE APPROVED INDEPENDENT EVALUATION REPORT. TENSION TESTING CAN BE REQUIRED AT THE DIRECTION OF THE STRUCTURAL ENGINEER OF RECORD OR THE SPECIAL INSPECTOR.
14. IF REINFORCEMENT IS ENCOUNTERED DURING DRILLING, ABANDON THAT HOLE AND SHIFT THE ANCHOR LOCATION TO AVOID THE REINFORCEMENT. PROVIDE A MINIMUM SPACE OF (2) ANCHOR HOLE DIAMETERS OR 1 INCH, WHICH EVER IS LARGER, OF SOUND CONCRETE/MASONRY BETWEEN THE ANCHOR AND THE ABANDONED HOLE. FILL THE ABANDONED HOLE WITH NON-SHRINK GROUT. AT CONTRACTORS OPTION, LOCATE EXISTING REINFORCEMENT PRIOR TO DRILLING/CORING. IF THE ANCHOR OR DOWEL CANNOT BE SHIFTED AS NOTED ABOVE, THE ENGINEER WILL DETERMINE A NEW LOCATION.
15. LOCATE REINFORCEMENT AND CONFIRM FINAL ANCHOR LOCATIONS PRIOR TO FABRICATING PLATES, MEMBERS, OR OTHER STEEL ASSEMBLIES ATTACHED WITH MECHANICAL ANCHORS.
16. SUBSTITUTION REQUESTS FOR ALTERNATE PRODUCTS SHALL BE APPROVED IN WRITING BY THE STRUCTURAL ENGINEER OF RECORD PRIOR TO USE. SUBSTITUTION REQUESTS SHALL INCLUDE AN ICC ESR OR IAPMO REPORTAND SUPPORTING CALCULATIONS INDICATING COMPLIANCE WITH DESIGN INTENT.

H. SUSPENDED CONCRETE SLABS / SLABS ON METAL DECK

1. UNLESS NOTED OTHERWISE, ALL CONCRETE SLABS ON METAL DECK SHALL BE 5" TOTAL THICKNESS LIGHT WEIGHT CONCRETE WITH A WEIGHT LESS THAN 110 POUNDS PER CUBIC FOOT, REINFORCED WITH #5 BARS AT 12"O.C. EACH WAY. REINFORCING STEEL SHALL BE CHAIRED TO 1" TOP COVER AT ALL BEAM LOCATIONS.
2. SLAB PENETRATIONS LESS THAN 6" IN ALL DIRECTIONS WITH A CLEAR SPACING OF AT LEAST 3 TIMES THE LONGEST DIMENSION, DO NOT REQUIRE SUPPLEMENTAL REINFORCING. OTHERWISE, THE PENETRATIONS SHALL BE FRAMED ON 4 SIDES WITH STEEL ANGLES OR BENT PLATES (SEE TYPICAL DETAIL) UNLESS NOTED OTHERWISE.
3. EVERY EFFORT SHALL BE MADE TO PROVIDE A LEVEL FINISHED FLOOR WHILE MAINTAINING THE MINIMUM INDICATED SLAB THICKNESS. WHEN PLACING CONCRETE, SCREEDS SHALL BE RE-SET AFTER INITIAL SCREEDING TO ACCOUNT FOR DEFLECTION DUE TO CONCRETE WEIGHT.
4. CONTROL JOINTS IN SUSPENDED CONCRETE SLABS AND CONCRETE SLABS ON DECK SHALL NOT BE USED UNLESS SPECIFICALLY APPROVED AND DETAILED BY THE ENGINEER.
5. SEE TYPICAL DETAILS WHEN SLABS ARE MADE COMPOSITE WITH STEEL BEAMS.
6. CONDUIT SHALL NOT BE PLACED IN SLABS ON DECK.
7. WHERE CONDUIT IS CLUSTERED TOGETHER TO RISE ABOVE SLAB OR PENETRATE SLAB, PENETRATION IN SLAB MUST BE SUPPORTED AS NOTED IN NOTE E.3 ABOVE.
8. CONTRACTOR SHALL PROVIDE ALL TEMPORARY SHORING, BRACING, AND GUYING AS REQUIRED DURING ERECTION AND PLACEMENT OF SUSPENDED CONCRETE SLABS ON METAL DECK.

I. REINFORCING STEEL

1. REINFORCING BAR STRENGTH REQUIREMENTS:
   a. ALL REINFORCING BARS SHALL CONFORM TO ASTM STANDARD A-615 GRADE 60 AND ALL WELDED WIRE FABRIC SHALL CONFORM TO ASTM STANDARD A-1064 AND SHALL BE SUPPLIED IN FLAT SHEETS. ADEQUATELY TIE AND SUPPORT ALL REINFORCING STEEL AS SPECIFIED BY ACI 117, TO MAINTAIN EXACT REQUIRED POSITION.
2. ALL FIELD BENT DOWELS SHALL BE GRADE 40 WITH SPACING INDICATED REDUCED BY 1/3.
3. UNLESS NOTED OTHERWISE, REINFORCEMENT SHALL HAVE THE FOLLOWING CONCRETE COVERAGE :
   a. CAST AGAINST AND PERMANENTLY EXPOSED TO EARTH ..... 3"
   b. EXPOSED TO EARTH OR WEATHER :
      1. #6 & LARGER ..... 2"
      2. #5 & SMALLER .....1-1/2"
   c. NOT EXPOSED TO WEATHER OR EARTH :
      1. SLABS, WALLS, JOISTS, #11 & SMALLER ..... 3/4"
      2. BEAMS, COLUMNS: MAIN REINFORCING OR TIES ..... 1-1/2"
   d. SLAB ON GRADE :
      1. PLACE REINFORCING AT CENTER OF SLAB UNLESS INDICATED OTHERWISE.
4. EXCEPT WHERE NOTED ON PLANS OR DETAILS CONTINUOUS REINFORCEMENT SHALL BE SPLICED AT POINTS OF MINIMUM STRESS BY LAPPING PER TYPICAL DETAILS LAP SCHEDULE.
5. REINFORCING STEEL MAY BE SPLICED WITH MECHANICAL COUPLERS THAT HAVE A TENSION CAPACITY OF AT LEAST 125% OF THE STRENGTH OF THE BAR. MECHANICAL COUPLERS SHALL BE A POSITIVE CONNECTING TYPE COUPLER, AND SHALL BE INSTALLED IN ACCORDANCE WITH AN APPROVED ICC RESEARCH REPORT. WHERE THESE ARE USED, SPLICES ON ADJACENT BARS SHALL BE STAGGERED AT LEAST 24 INCHES ALONG THE LENGTH OF THE BARS.
6. ALL VERTICAL REINFORCING IN STRUCTURAL ELEMENTS ABOVE SHALL BE SPLICED WITH MATCHING DOWELS EMBEDDED WITHIN THE FOOTINGS OR STRUCTURE BELOW. SPLICE LENGTHS SHALL COMPLY WITH REBAR LAP SCHEDULE. DOWELS INTO FOOTINGS SHALL TERMINATE WITH A STANDARD HOOK, AND SHALL EXTEND TO WITHIN 4" OF THE BOTTOM OF THE FOOTING, BUT NEED NOT EXTEND BEYOND THE TOP MAT INTO FOOTING. FOR MASONRY CONSTRUCTION SEE STRUCTURAL NOTE L.6.A.
7. DO NOT WELD REINFORCING EXCEPT AS NOTED ON PLANS, WHERE REINFORCING IS WELDED, USE ASTM A-706 REINFORCING.
8. REINFORCING BARS, TIES, AND TENDONS SHALL BE SUPPORTED BY NYLON CONES, PLASTIC-COATED TIE-WIRES, OR PLASTIC-COATED CHAIRS. REINFORCING IN FOOTINGS IS PERMITTED TO BE SUPPORTED ON CONCRETE DOBIES.
9. UNLESS NOTED OTHERWISE, HOOKS, STIRRUPS, TIES, AND OTHER BENDS IN REINFORCING STEEL SHALL MEET THE STANDARDS SET FORTH IN ACI 318/318R-14. UNLESS OTHERWISE PERMITTED BY THE ENGINEER, ALL REINFORCEMENT SHALL BE BENT COLD. REINFORCEMENT PARTIALLY EMBEDDED IN CONCRETE SHALL NOT BE FIELD BENT, EXCEPT AS SHOWN ON THESE DRAWINGS OR OTHERWISE PERMITTED BY THE ENGINEER.
10. UNLESS SPECIFICALLY NOTED AND/OR DETAILED IN THE STRUCTURAL DRAWINGS CONDUIT SHALL NOT BE IN CONTACT WITH REINFORCING STEEL.

J. STRUCTURAL STEEL

1. STRUCTURAL STEEL SHALL BE FABRICATED AND ERECTED IN ACCORDANCE WITH THE LATEST EDITION OF THE FOLLOWING:
   a. ANSI/AISC 360-10 "SPECIFICATION FOR STRUCTURAL STEEL BUILDINGS", WITH "COMMENTARY" AND "SUPPLEMENTS" AS REQUIRED BY BUILDING CODE.
   b. AISC 303-10 "CODE OF STANDARD PRACTICE FOR STEEL BUILDINGS AND BRIDGES" EXCLUDING THE FOLLOWING SECTIONS: 4.4, 4.4.1, AND 4.2.
   c. AISI "SPECIFICATIONS FOR THE DESIGN OF COLD-FORMED STEEL STRUCTURAL MEMBERS".
   d. AISC SPECIFICATION FOR STRUCTURAL JOINTS USING ASTM A325 OR A490 BOLTS".
   e. AWS D1.1 AND 1.3, "STRUCTURAL WELDING CODE" (EXCEPT SPECIFIC ITEMS DO NOT APPLY IF THEY CONFLICT WITH AISC).
   f. ANSI/AISC 341-10 "SEISMIC PROVISIONS FOR STRUCTURAL STEEL BUILDINGS".
2. STRUCTURAL STEEL SHALL COMPLY WITH THE FOLLOWING:
   a. WIDE FLANGE SHAPES AND WT SHAPES - ASTM A992
   b. OTHER SHAPES AND PLATES - ASTM A-36 (UNO)
   c. HOLLOW STRUCTURAL SECTIONS (HSS) - ASTM A-500, GRADE C FOR SQUARE, RECTANGULAR AND ROUND SHAPES (FY = 50 KSI FOR SQUARE AND RECTANGULAR SHAPES AND 46 KSI FOR ROUND SHAPES)
   d. STAINLESS STEEL SHAPES, PLATES, AND FASTENERS – ASTM 304
   e. DEFORMED BAR ANCHORS (DBA) - ASTM A-496, WELDED IN ACCORDANCE WITH AWS D1.1
   f. HEADED STUD ANCHORS (HSA) - ASTM A-108,

SEISMIC MASS KEY PLAN

PIPING FLOOR

80 PSF (8 PIPES @ 250 PLF EA. ACROSS 26' BAY)
+ 5 PSF (MISC. EQUIPMENT)
+ 10 PSF (STEEL FRAMING)
+ 88 PSF (6" CONC. SLAB & 1" WEARING SURFACE)
+ 2 PSF (FIRE SPRINKLER)
TOTAL = 185 PSF

5 PSF GRATING
+ 10 PSF (STEEL FRAMING)
+ 30 PSF (3 PIPES @ 250 PLF EA. ACROSS 26' BAY)
+ 5 PSF (MISC. EQUIPMENT)
+ 2 PSF (FIRE SPRINKLER)
TOTAL = 52 PSF

20 PSF (2 PIPES @ 250 PLF EA. ACROSS 26' BAY)
+ 10 PSF (STEEL FRAMING)
+ 5 PSF (MISC. EQUIPMENT)
+ 2 PSF (FIRE SPRINKLER)
TOTAL = 37 PSF

10 PSF (STEEL FRAMING)
+ 5 PSF (MISC. EQUIPMENT)
TOTAL = 15 PSF

10 PSF (STEEL FRAMING)
+ 5 PSF (MISC. EQUIPMENT)
+ 40 PSF (5" L.W. CONC. SLAB W/ PLB DECK)
+2 PSF (FIRE SPRINKLER)
TOTAL = 57 PSF

NOTE: 405 PLF PERIMETER LOAD @ EACH LEVEL FOR WALL ENVELOPE.
27 PSF WALL WEIGHT W/ 15'-0" WALL HEIGHT.

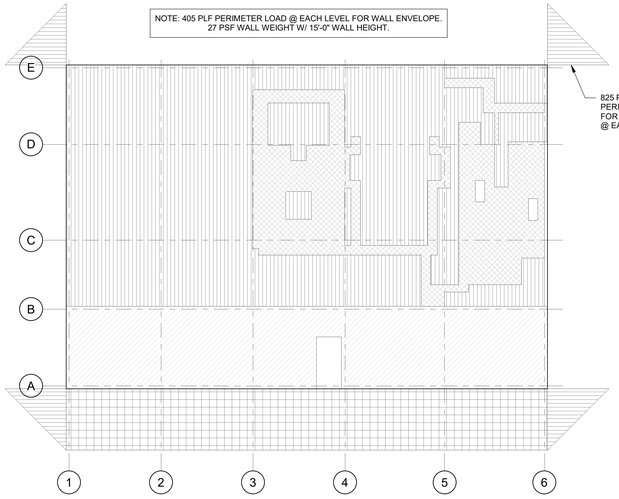

FAN FLOOR

40 PSF (4 PIPES @ 250 PLF EA. ACROSS 26' BAY)
+ 5 PSF (MISC. EQUIPMENT)
+ 10 PSF (STEEL FRAMING)
+ 125 PSF (9" CONC. SLAB & BEAM ENCASEMENT)
+ 2 PSF (FIRE SPRINKLER)
TOTAL = 182 PSF

30 PSF (3 PIPES @ 250 PLF EA. ACROSS 26' BAY)
+ 10 PSF (STEEL FRAMING)
+ 5 PSF (MISC. EQUIPMENT)
+ 5 PSF GRATING
+ 2 PSF (FIRE SPRINKLER)
TOTAL = 52 PSF

20 PSF (2 PIPES @ 250 PLF EA. ACROSS 26' BAY)
+ 10 PSF (STEEL FRAMING)
+ 5 PSF (MISC. EQUIPMENT)
+ 2 PSF (FIRE SPRINKLER)
TOTAL = 37 PSF

10 PSF (STEEL FRAMING)
+ 5 PSF (MISC. EQUIPMENT)
TOTAL = 15 PSF

20 PSF (2 PIPES @ 250 PLF EA. ACROSS 26' BAY)
+ 10 PSF (STEEL FRAMING)
+ 5 PSF (MISC. EQUIPMENT)
+ 50 PSF (4" SHOTCRETE)
+ 2 PSF (FIRE SPRINKLER)
TOTAL = 87 PSF

NOTE: 405 PLF PERIMETER LOAD @ EACH LEVEL FOR WALL ENVELOPE.
27 PSF WALL WEIGHT W/ 15'-0" WALL HEIGHT.

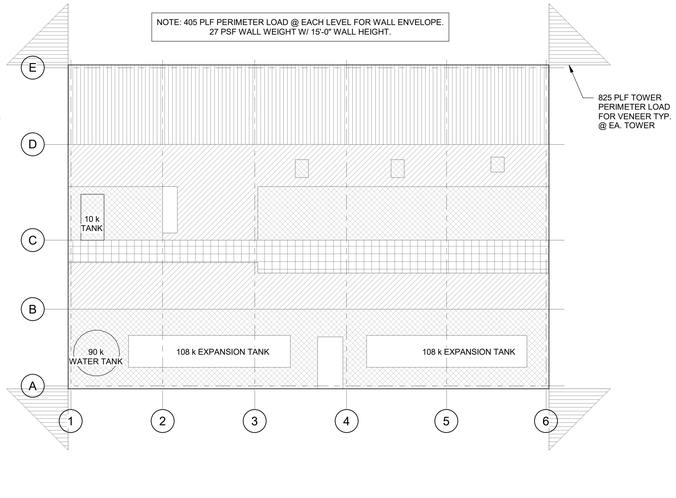

ROOF

10 PSF (1 PIPE @ 250 PLF EA. ACROSS 26' BAY)
+ 10 PSF (STEEL FRAMING)
+ 5 PSF (METAL DECK & MISC. ROOFING)
+ 2 PSF (FIRE SPRINKLER)
+ 1 PSF (COLLATERAL)
+ 7 PSF (SEISMIC SNOW)
TOTAL = 35 PSF

10 PSF (STEEL FRAMING)
+ 3 PSF (MISC. EQUIPMENT)
+7 PSF (SEISMIC SNOW)
TOTAL = 20 PSF

NOTE: 300 PLF PERIMETER LOAD @ EACH LEVEL FOR WALL ENVELOPE.
27 PSF WALL WEIGHT W/ 7'-6" WALL HEIGHT & 3'-6" PARAPET.

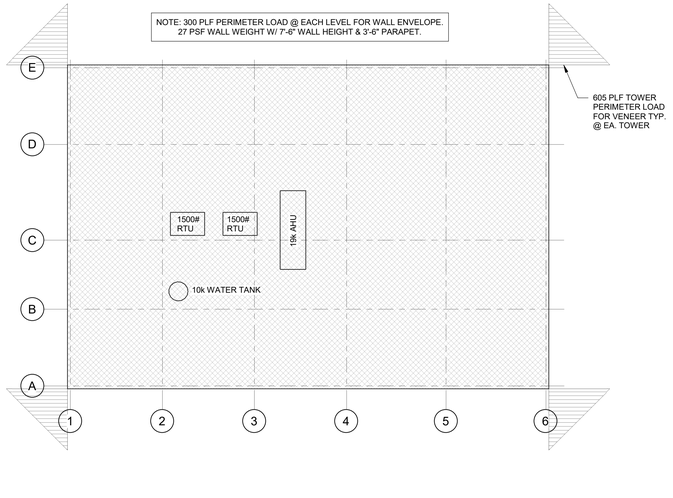

BEAM CONNECTION SCHEDULE

BEAM DEPTH	SHEAR PLATE INFORMATION			BOLTS W/ STANDARD WASHERS OVER SLOTS		WELD 'A'	COMMENTS
	PL. DIMENSIONS W/ SHORT-SLOTTED HOLES	Lev	Leh	No.	SIZE		
W8 x, W10 x, C8 x	PL. 1/4" x 4"	1 1/2"	2"	2	3/4" Ø	3/16"	
W12 x, C12 x	PL. 5/16" x 4"	1 1/2"	2"	3	3/4" Ø	1/4"	
W14 x 90 & LIGHTER	PL. 5/16" x 4"	1 1/2"	2"	3	3/4" Ø	1/4"	
W16 x 77 & LIGHTER	PL. 5/16" x 4"	1 1/2"	2"	4	3/4" Ø	1/4"	
W18 x 65 & LIGHTER	PL. 5/16" x 4"	1 1/2"	2"	5	3/4" Ø	1/4"	
W21 x 73 & LIGHTER	PL. 5/16" x 4"	1 1/2"	2"	6	3/4" Ø	1/4"	
W24 x 94 & LIGHTER	PL. 3/8" x 4"	1 1/2"	2"	7	7/8" Ø	1/4"	

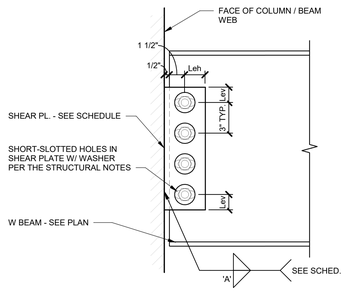

ROOF DECK SCHEDULE (L)

AREA	DECK			ATTACHMENT							MIN. SHEAR CAPACITY	MAX. FLEXIBILITY FACTOR
				SUPPORTS		SIDE SEAMS			SUPPORTS PARALLEL TO FLUTES			
	DEPTH	TYPE	GA.	HILTI FASTENER	PATTERN	#12 TEK SCREWS	TOP SEAM WELD	PUNCH LOCK'	HILTI FASTENER	SPA.		
A	1 1/2"	B	18	ENP19	36/7/4	---	---	18"o.c.	ENP19	18"o.c.	1212 plf	6 + 3R
B	1 1/2"	B	22	ENP19	36/4	---	---	24"o.c.	ENP19	18"o.c.	478 plf	0.4 + 179R

FASTENING PATTERNS

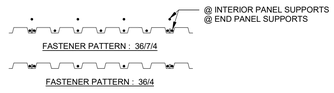

NOTES :
1. USE NESTABLE (OVERLAPPING) SIDE SEAMS AT SCREW ATTACHMENTS AND INTERLOCKING SIDE SEAMS AT WELDS.
2. ALL DECK WITH A PROFILE DEPTH OF 2" OR LESS SHALL HAVE NESTED OR TELESCOPED END LAPS.
3. SUBMIT CURRENT ICC APPROVAL FOR ALL DECKS.
4. ALTERNATE SYSTEMS SHALL MEET OR EXCEED THE MINIMUM SHEAR CAPACITY AND SHALL PROVIDE LESS THAN OR EQUAL TO THE MAXIMUM FLEXIBILITY FACTOR LISTED IN THE SCHEDULE.
5. ALL ALTERNATE SYSTEMS SHALL BE SUBMITTED TO THE ENGINEER FOR REVIEW AND APPROVAL.

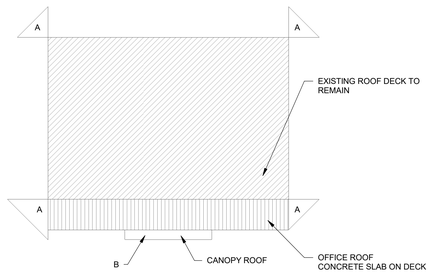

KEY PLAN

FOOTING SCHEDULE

MARK	WIDTH	LENGTH	THICK	LENGTHWISE REINF.		CROSSWISE REINF.			REMARKS
				NO.	SIZE	NO.	SIZE	SPA.	
FC2	2'-0"	CONT.	12"	(2)	#5	--	--	--	
FC6	6'-0"	CONT.	12"	(6)	#5	--	#5	12"o.c.	REINF. TOP & BOTTOM
F3	3'-0"	3'-0"	12"	(3)	#5	(3)	#5	--	
F4	4'-0"	4'-0"	12"	(4)	#5	(4)	#5	--	
GB1	48"	CONT.	18"	(12)	#8	--	--	--	NOT IN PHASE 4
GB2	48"	CONT.	30"	(18)	#8	--	--	--	NOT IN PHASE 4
PC1	60"	60"	60"	--	--	--	--	--	NOT IN PHASE 4
PC2	48"	60"	34"	--	--	--	--	--	NOT IN PHASE 4
PC3	90"	102"	60"	--	--	--	--	--	NOT IN PHASE 4
PC4	78"	90"	60"	--	--	--	--	--	NOT IN PHASE 4
PC5	64"	60"	34"	--	--	--	--	--	NOT IN PHASE 4

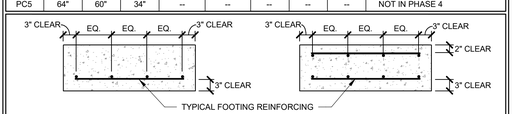

TYP. FOOTING SECTION

TYP. FOOTING SECTION W/ TOP & BOTTOM REINF.

STANDARD HOOK & BEND SCHEDULE

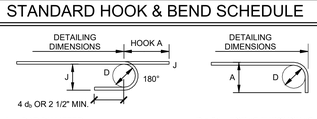

d_b = BAR DIAMETER
D = FINISHED INSIDE BEND DIAMETER

D = 6d_b FOR #3 THROUGH #8
D = 8d_b FOR #9 THROUGH #11

BAR SIZE	DIMENSION OF STANDARD 180-DEG HOOKS, ALL GRADES			DIMENSION OF STANDARD 90-DEG HOOKS, ALL GRADES	
	A	J	D	A	D
#3	5"	3"	2 1/4"	6"	2 1/4"
#4	6"	4"	3"	8"	3"
#5	7"	5"	3 3/4"	10"	3 3/4"
#6	8"	6"	4 1/2"	1'-0"	4 1/2"
#7	10"	7"	5 1/4"	1'-2"	5 1/4"
#8	11"	8"	6"	1'-4"	6"
#9	1'-3"	11 3/4"	9 1/2"	1'-7"	9 1/2"
#10	1'-5"	1'-1 1/4"	10 3/4"	1'-10"	10 3/4"
#11	1'-7"	1'-2 3/4"	12"	2'-0"	12"

LEGEND OF SYMBOLS AND ABBREVIATIONS

AB = ANCHOR BOLT
ABV = ABOVE
ARCH = ARCHITECT
BLW = BELOW
BRB = BUCKLING RESTRAINED BRACE
BRBF = BUCKLING RESTRAINED BRACE FRAME
CJP = COMPLETE JOINT PENETRATION
CL = CENTERLINE
COL = COLUMN
CONC = CONCRETE
CP = CONCRETE PIER
CW = CONCRETE WALL
DC = DEMAND CRITICAL
DIA / Ø = DIAMETER
DBA = DEFORMED BAR ANCHOR
DBE = DECK BEARING ELEVATION
ELEV = ELEVATION
EMU = EXISTING MEMBER UPGRADE
EOD = EDGE OF DECK
FDN = FOUNDATION
FTG = FOOTING
FFE = FINISHED FLOOR ELEVATION
GB = CONCRETE GRADE BEAM
HSA = HEADED STUD ANCHOR
KB = KICKER BRACE
MAX = MAXIMUM
MECH = MECHANICAL
MIN = MINIMUM
NS, FS = NEAR SIDE, FAR SIDE
OAE = OR APPROVED EQUAL
OPP = OPPOSITE
PAF = POWDER ACTUATED FASTENER
PL = PLATE
REINF = REINFORCING
REQ'D = REQUIRED
SIM = SIMILAR
TOB = TOP OF BEAM ELEVATION
TOC = TOP OF CONCRETE SLAB
TOF = TOP OF FOOTING
TOG = TOP OF GIRDER ELEVATION
TOS = TOP OF STEEL ELEVATION
TYP = TYPICAL
UNO = UNLESS NOTED OTHERWISE
NIC = NOT IN CONTRACT
(E) = EXISTING
(N) = NEW
VPG = VERTICAL PILE GROUP
HPG = HORIZONTAL PILE GROUP
BA = BID ALTERNATE

FOOTING MARK
TOP OF FOOTING ELEV.
SECTION MARK
SHEET NUMBER
TOP OF FOUNDATION WALL OR COLUMN PIER ELEV.
S — S FOOTING STEP
DEPRESS FDN./WALL AND POUR FLOOR SLAB OVER AT CONCRETE FOUNDATION WALL
CONCRETE BEAM
ELEVATION
L FRAMING ANGLE SEE TYPICAL DETAIL
C FRAMING CHANNEL SEE TYPICAL DETAIL
L ITEMS, DETAILS, & SYSTEMS WHICH ARE PART OF THE LATERAL FORCE RESISTING SYSTEM.
MOMENT RESISTING CONNECTIONS - SEE DETAIL
MOMENT RESISTING CANTILEVER CONNECTIONS - SEE DETAIL
KB KICKER BRACE
EMU-# UPGRADE ON EXISTING W BEAM - SEE SCHEDULE
NOT IN CONTRACT
DIRECTION DECK IS SPANNING

FFKR ARCHITECTS
730 Pacific Avenue · Salt Lake City, Utah 84104
O 801.521.6186 · FFKR.COM

50 Years 1965 2019 ENGINEERS
structural consultants
1384 W. Park Cir. Ogden, Utah 84404
ph: 801.782.6008 fx: 801.782.4656

U OF U BLDG. 303 SEISMIC UPGRADE, PROJ. #22508 -PHASE 4
SALT LAKE CITY UTAH
PERMIT SET - 10-10-2022

PROFESSIONAL STRUCTURAL ENGINEER
10/10/22
No. 276196
Robert M. Moyle
STATE OF UTAH

△	DATE	REVISION
3	2/19/21	PR #2
5	5/10/21	PR #4

PROJECT NUMBER 18923

SCHEDULES

SG-002

10/10/2022 2:21:47 PM

STRUCTURAL STEEL SPECIAL INSPECTION SCHEDULE

ESTABLISHED PER 2018 IBC SECTION 1705.2.1

INSPECTION TASKS PRIOR TO WELDING (TABLE N5.4-1)	FABRICATOR QUALITY CONTROL		SPECIAL INSPECTOR QUALITY ASSURANCE	
	CONTINUOUS	PERIODIC	CONTINUOUS	PERIODIC
WELDER QUALIFICATION RECORDS AND CONTINUITY RECORDS	●			●
WELDING PROCEDURE SPECIFICATIONS (WPSs) AVAILABLE	●		●	
MANUFACTURER CERTIFICATIONS FOR WELDING CONSUMABLES AVAILABLE	●		●	
MATERIAL IDENTIFICATION (TYPE / GRADE)		●		●
WELDER IDENTIFICATION SYSTEM[1]		●		●
FIT-UP OF GROOVE WELDS (INCLUDING JOINT GEOMETRY)				
* JOINT PREPARATION				
* DIMENSIONS (ALIGNMENT, ROOT OPENING, ROOT FACE, BEVEL)		●		●
* CLEANLINESS (CONDITION OF STEEL SURFACES)				
* TACKING (TACK WELD QUALITY AND LOCATION)				
* BACKING TYPE AND FIT (IF APPLICABLE)				
FIT-UP OF CJP GROOVE WELDS OFHSS T-, Y-, AND K-JOINTS WITHOUT BACKING (INCLUDING JOINT GEOMETRY)				
* JOINT PREPARATIONS				
* DIMENSIONS (ALIGNMENT, ROOT OPENING, ROOT FACE, BEVEL)	●			●
* CLEANLINESS (CONDITION OF STEEL SURFACES)				
* TACKING (TACK WELD QUALITY AND LOCATION)				
CONFIGURATION AND FINISH OF ACCESS HOLES		●		●
FIT-UP OF FILLET WELDS				
* DIMENSIONS (ALIGNMENT, GAPS AT ROOT)		●		●
* CLEANLINESS (CONDITION OF STEEL SURFACES)				
* TACKING (TACK WELD QUALITY AND LOCATION)				
CHECK WELDING EQUIPMENT		●		

[1]THE FABRICATOR OR ERECTOR, AS APPLICABLE, SHALL MAINTAIN A SYSTEM BY WHICH A WELDER WHO HAS WELDED A JOINT OR MEMBER CAN BE IDENTIFIED. STAMPS, IF USED, SHALL BE THE LOW-STRESS TYPE.

INSPECTION TASKS DURING WELDING (TABLE N5.4-2)	CONTINUOUS	PERIODIC	CONTINUOUS	PERIODIC
CONTROL AND HANDLING OF WELDING CONSUMABLES				
* PACKAGING		●		●
* EXPOSURE CONTROL				
NO WELDING OVER CRACKED TACK WELDS		●		●
ENVIRONMENTAL CONDITIONS				
* WIND SPEED WITHIN LIMITS		●		●
* PRECIPITATION AND TEMPERATURE				
WPS FOLLOWED				
* SETTINGS ON WELDING EQUIPMENT				
* TRAVEL SPEED				
* SELECTED WELDING MATERIALS		●		●
* SHIELDING GAS TYPE / FLOW RATE				
* PREHEAT APPLIED				
* INTERPASS TEMPERATURE MAINTAINED (MIN. / MAX)				
* PROPER POSITION (F, V, H, OH)				
WELDING TECHNIQUES				
* INTERPASS AND FINAL CLEANING				
* EACH PASS WITHIN PROFILE LIMITATIONS		●		●
* EACH PASS MEETS QUALITY REQUIREMENTS				
PLACEMENT AND INSTALLATION OF STEEL HEADED STUD ANCHORS	●		●	

INSPECTION TASKS AFTER WELDING (TABLE N5.4-3)	CONTINUOUS	PERIODIC	CONTINUOUS	PERIODIC
WELDS CLEANED		●		●
SIZE, LENGTH AND LOCATION OF WELDS	●		●	
WELDS MEET VISUAL ACCEPTANCE CRITERIA				
* CRACK PROHIBITION				
* WELD / BASE-METAL FUSION				
* CRATER CROSS SECTION	●		●	
* WELD PROFILES				
* WELD SIZE				
* UNDERCUT				
* POROSITY				
ARC STRIKES	●		●	
K-AREA[1]	●		●	
WELD ACCESS HOLES IN ROLLED HEAVY SHAPES AND BUILT-UP HEAVY SHAPES[2]	●		●	
BACKING REMOVED AND WELD TABS REMOVED (IF REQUIRED)	●		●	
REPAIR ACTIVITIES	●		●	
DOCUMENT ACCEPTANCE OR REJECTION OF WELDED JOINT OR MEMBER	●		●	
NO PROHIBITED WELDS HAVE BEEN ADDED WITHOUT THE APPROVAL OF THE EOR		●		●

[1]WHEN WELDING OF DOUBLER PLATES, CONTINUITY PLATES OR STIFFENERS HAS BEEN PERFORMED IN THE K-AREA, VISUALLY INSPECT THE WEB K-AREA FOR CRACKS WITHIN 3 IN. (75mm) OF THE WELD)
[2]AFTER ROLLED HEAVY SHAPES (SEE SECTION A3.1c) AND BUILT-UP HEAVY SHAPES (SEE SECTION A3.1d) ARE WELDED, VISUALLY INSPECT THE WELD ACCESS HOLE FOR CRACKS.

NOTES

1. PERIODIC - OBSERVE THESE ITEMS ON A RANDOM BASIS. OPERATIONS NEED NOT BE DELAYED PENDING THESE INSPECTIONS.
2. CONTINUOUS - PERFORM THESE TASKS FOR EACH WELDED JOINT OR MEMBER.
3. QUALITY CONTROL (QC) SHALL BE PROVIDED BY THE FABRICATOR AND ERECTOR.
4. QUALITY ASSURANCE (QA) SHALL BE PROVIDED BY OTHERS WHEN REQUIRED BY THE AUTHORITY HAVING JURISDICTION (AHJ). APPLICABLE BUILDING CODE (ABC), PURCHASER, OWNER, OR ENGINEER OF RECORD (EOR). NONDESTRUCTIVE TESTING (NDT) SHALL BE PERFORMED BY THE AGENCY OR FIRM RESPONSIBLE FOR QUALITY ASSURANCE, EXCEPT AS PERMITTED IN ACCORDANCE WITH SECTION N6.
5. QC AND QA INSPECTORS SHALL BE QUALIFIED IN ACCORDANCE WITH AISC 360-16 CHAPTER N4.
6. NONDESTRUCTIVE TESTING PERSONNEL SHALL BE QUALIFIED IN ACCORDANCE WITH AISC 360-16 CHAPTER N4.3.
7. NONDESTRUCTIVE TESTING OF WELDED JOINTS SHALL COMPLY WITH AISC 360-16 CHAPTER N5.5a AND b.
8. OBSERVATION OF WELDING OPERATIONS AND VISUAL INSPECTION OF IN-PROCESS AND COMPLETED WELDS SHALL BE THE PRIMARY METHOD TO CONFIRM THAT THE MATERIALS, PROCEDURES AND WORKMANSHIP ARE IN CONFORMANCE WITH THE CONSTRUCTION DOCUMENTS. FOR STRUCTURAL STEEL, ALL PROVISIONS OF AWS D1.1 / D1.1M STRUCTURAL WELDING CODE - STEEL FOR STATICALLY LOADED STRUCTURES SHALL APPLY.
9. THERMALLY CUT SURFACES OF ACCESS HOLES SHALL BE TESTED BY QA USING MT OR PT, WHEN THE FLANGE THICKNESS EXCEEDS 2 IN. (50mm) FOR ROLLED SHAPES, OR WHEN THE WEB THICKNESS EXCEEDS 2 IN. (50mm) FOR BUILT-UP SHAPES. ANY CRACK SHALL BE DEEMED UNACCEPTABLE REGARDLESS OF SIZE OR LOCATION.
10. WHEN REQUIRED BY APPENDIX 3, TABLE A-3.1, WELDED JOINTS REQUIRING WELD SOUNDNESS TO BE ESTABLISHED BY RADIOGRAPHICS OR ULTRASONIC INSPECTION SHALL BE TESTED BY QA AS PRESCRIBED. REDUCTION IN THE RATE OF UT IS PROHIBITED.
11. REDUCTION OF RATE OF ULTRASONIC TESTING - THE RATE OF UT IS ONLY PERMITTED TO BE REDUCED IF APPROVED BY THE EOR AND THE AHJ PER AISC 360-16 CHAPTER N5.5e.
12. FOR STRUCTURES IN RISK CATEGORY II, WHERE THE INITIAL RATE FOR UT IS 10%, THE NDT RATE FOR AN INDIVIDUAL WELDER OR WELDING OPERATOR SHALL BE INCREASED TO 100% SHOULD THE REJECT RATE, THE NUMBER OF WELDS CONTAINING UNACCEPTABLE DEFECTS DIVIDED BY THE NUMBER OF WELDS COMPLETED, EXCEEDS 5% OF THE WELDS TESTED FOR THE WELDER OR WELDING OPERATOR. A SAMPLING OF AT LEAST 20 COMPLETED WELDS FOR A JOB SHALL BE MADE PRIOR TO IMPLEMENTING SUCH AN INCREASE. WHEN THE REJECT RATE FOR THE WELDER OR WELDING OPERATOR, AFTER A SAMPLING OF AT LEAST 40 COMPLETED WELDS, HAS FALLEN TO 5% OR LESS, THE RATE OF UT SHALL BE RETURNED TO 10%. FOR EVALUATING THE REJECT RATE OF CONTINUOUS WELDS OVER 3 FT (1M) IN LENGTH WHERE THE EFFECTIVE THROAT IS 1 IN. (25mm) OR LESS, EACH 12 IN. (300mm) INCREMENT OR FRACTION THEREOF SHALL BE CONSIDERED AS ONE WELD. FOR EVALUATING THE REJECT RATE ON CONTINUOUS WELDS OVER 3 FT (1M) IN LENGTH WHERE THE EFFECTIVE THROAT IS GREATER THAN 1 IN. (25mm), EACH 6 IN. (150mm) OF LENGTH OR FRACTION THEREOF SHALL BE CONSIDERED ON WELD.
13. ALL NDT PERFORMED SHALL BE DOCUMENTED. FOR SHOP FABRICATION, THE NDT REPORT SHALL IDENTIFY THE TESTED WELD BY PIECE MARK AND LOCATION IN THE PIECE. FOR FIELD WORK, THE NDT REPORT SHALL IDENTIFY THE TESTED WELD BY LOCATION IN THE STRUCTURE, PIECE MARK, AND LOCATION IN THE PIECE. WHEN A WELD IS REJECTED ON THE BASIS OF NDT, THE NDT RECORD SHALL INDICATE THE LOCATION OF THE DEFECT AND THE BASIS OF REJECTION
14. DEMAND CRITICAL WELDS SHALL MEET THE PROVISION FOUND IN AISC 341-16 AND WELDING METHODS, PROCEDURES AND QUALITY CONTROL SHALL COMPLY WITH AWS D1.1 AND THE FOLLOWING:
    a. ARC STRIKES, GOUGES AND OTHER IMPERFECTIONS WITHIN OR ADJACENT TO THE JOINT, SHALL BE REPAIRED OR REMOVED.
    b. PREHEAT AND INTER-PASS REQUIREMENTS AS OUTLINED IN SECTION 3.5.
    c. UNREPAIRED CRACKS, GOUGES, AND NOTCHES WILL NOT BE PERMITTED IN THE JOINT AREA.
    d. USE ELECTRODES WITH CHARPY V-NOTCH ABSORBED ENERGY EQUAL TO OR GREATER THAN 20 FT-LBS AT 20 DEGREES FAHRENHEIT UNDER AWS A5 CLASSIFICATION TEST METHODS, AND 40 FT-LBS AT 70 DEGREES FAHRENHEIT USING TEST PROCEDURES PRESCRIBED IN APPENDIX X OF AISC 358. ACCEPTABLE ELECTRODES INCLUDE E70TG-K2, E71 T-1.

INSPECTION TASKS PRIOR TO BOLTING (TABLE N5.6-1)	CONTINUOUS	PERIODIC	CONTINUOUS	PERIODIC
MANUFACTURER'S CERTIFICATIONS AVAILABLE FOR FASTENER MATERIALS		●	●	
FASTENERS MARKED IN ACCORDANCE WITH ASTM REQUIREMENTS		●		●
PROPER FASTENERS SELECTED FOR THE JOINT DETAIL (GRADE, TYPE, BOLT LENGTH IF THREADS ARE TO BE EXCLUDED FROM SHEAR PLANE)		●		●
PROPER BOLTING PROCEDURES SELECTED FOR JOINT DETAIL		●		●
CONNECTING ELEMENTS, INCLUDING THE APPROPRIATE FAYING SURFACE CONDITION AND HOLE PREPARATION, IF SPECIFIED, MEET APPLICABLE REQUIREMENTS		●		●
PRE-INSTALLATION VERIFICATION TESTING BY INSTALLATION PERSONNEL OBSERVED AND DOCUMENTED FOR FASTENER ASSEMBLIES AND METHODS USED	●			●
PROPER STORAGE PROVIDED FOR BOLTS, NUTS, WASHERS AND OTHER FASTENER COMPONENTS		●		●

INSPECTION TASKS DURING BOLTING (TABLE N5.6-2)	CONTINUOUS	PERIODIC	CONTINUOUS	PERIODIC
FASTENER ASSEMBLIES, PLACED IN ALL HOLES AND WASHERS (IF REQUIRED) ARE POSITIONED AS REQUIRED		●		●
JOINT BROUGHT TO THE SNUG-TIGHT CONDITION PRIOR TO THE PRETENSIONING OPERATION		●		●
FASTENER COMPONENT NOT TURNED BY THE WRENCH PREVENTED FROM ROTATING		●		●
FASTENERS ARE PRETENSIONED IN ACCORDANCE WITH THE RCSC SPECIFICATION, PROGRESSING SYSTEMATICALLY FROM THE MOST RIGID POINT TOWARD THE FREE EDGES		●		●

INSPECTION TASKS AFTER BOLTING (TABLE N5.6-3)	CONTINUOUS	PERIODIC	CONTINUOUS	PERIODIC
DOCUMENT ACCEPTANCE OR REJECTION OF BOLTED CONNECTIONS	●		●	

NOTES

1. PERIODIC - OBSERVE THESE ITEMS ON A RANDOM BASIS. OPERATIONS NEED NOT BE DELAYED PENDING THESE INSPECTIONS.
2. CONTINUOUS - PERFORM THESE TASKS FOR EACH BOLTED CONNECTION.
3. QUALITY CONTROL (QC) SHALL BE PROVIDED BY THE FABRICATOR AND ERECTOR.
4. QUALITY ASSURANCE (QA) SHALL BE PROVIDED BY OTHERS WHEN REQUIRED BY THE AUTHORITY HAVING JURISDICTION (AHJ). APPLICABLE BUILDING CODE (ABC), PURCHASER, OWNER, OR ENGINEER OF RECORD (EOR). NONDESTRUCTIVE TESTING (NDT) SHALL BE PERFORMED BY THE AGENCY OR FIRM RESPONSIBLE FOR QUALITY ASSURANCE, EXCEPT AS PERMITTED IN ACCORDANCE WITH SECTION N7.
5. FOR SNUG-TIGHT JOINTS, PRE-INSTALLATION VERIFICATION TESTING AS SPECIFIED IN TABLE N5.6-1 AND MONITORING OF THE INSTALLATION PROCEDURES AS SPECIFIED IN TABLE N5.6-2 ARE NOT APPLICABLE. THE QCI AND QAI NEED NOT BE PRESENT DURING THE INSTALLATION OF FASTENERS IN SNUG-TIGHT JOINTS.
6. FOR PRETENSIONED JOINTS AND SLIP-CRITICAL JOINTS, WHEN THE INSTALLER IS USING THE TURN-OF-NUT METHOD WITH MATCHMARKING TECHNIQUES, THE DIRECT-TENSION-INDICATOR METHOD, OR THE TWIST-OFF-TYPE TENSION CONTROL BOLT METHOD, MONITORING OF BOLT PRETENSIONING PROCEDURES SHALL BE AS SPECIFIED IN TABLE N5.6-2. THE QCI AND QAI NEED NOT BE PRESENT DURING THE INSTALLATION OF FASTENERS WHEN THESE METHODS ARE USED BY THE INSTALLER.
7. FOR PRETENSIONED JOINTS AND SLIP-CRITICAL JOINTS, WHEN THE INSTALLER IS USING THE CALIBRATED WRENCH METHOD OR THE TURN-OF-NUT METHOD WITHOUT MATCHMARKING, MONITORING OF BOLT PRETENSIONING PROCEDURES SHALL BE AS SPECIFIED IN TABLE N5.6-2. THE QCI AND QAI SHALL BE ENGAGED IN THEIR ASSIGNED INSPECTION DUTIES DURING INSTALLATION OF FASTENERS WHEN THESE METHODS ARE USED BY THE INSTALLER.
8. OBSERVATION OF BOLTING OPERATIONS SHALL BE THE PRIMARY METHOD USED TO CONFIRM THAT THE MATERIALS, PROCEDURES AND WORKMANSHIP INCORPORATED IN CONSTRUCTION ARE IN CONFORMANCE WITH THE CONSTRUCTION DOCUMENTS AND THE PROVISIONS OF THE RCSC SPECIFICATION.

GENERAL STEEL SPECIAL INSPECTION NOTES :

1. QUALITY ASSURANCE (QA) INSPECTION OF FABRICATED ITEMS SHALL BE MADE AT THE FABRICATOR'S PLANT. THE QUALITY ASSURANCE INSPECTOR (QAI) SHALL SCHEDULE THIS WORK TO MINIMIZE INTERRUPTION TO THE WORK OF THE FABRICATOR.
2. QA INSPECTION OF THE ERECTED STEEL SYSTEM SHALL BE MADE AT THE PROJECT SITE. THE QAI SHALL SCHEDULE THIS WORK TO MINIMIZE INTERRUPTION TO THE WORK OF THE ERECTOR.
3. WHERE A TASK IS NOTED TO BE PERFORMED BY BOTH QC AND QA, IT IS PERMITTED TO COORDINATE THE INSPECTION FUNCTION BETWEEN THE QCI AND QAI SO THAT THE INSPECTION FUNCTIONS ARE PERFORMED BY ONLY ONE PARTY. WHERE QA RELIES UPON INSPECTION FUNCTIONS PERFORMED BY QC, THE APPROVAL OF THE ENGINEER OF RECORD AND THE AUTHORITY HAVING JURISDICTION IS REQUIRED.
4. THE FABRICATOR'S QCI SHALL INSPECT THE FABRICATED STEEL TO VERIFY COMPLIANCE WITH THE DETAILS SHOWN ON THE SHOP DRAWINGS, SUCH AS PROPER APPLICATION OF JOINT DETAILS AT EACH CONNECTION. THE ERECTOR'S QCI SHALL INSPECT THE ERECTED STEEL FRAME TO VERIFY COMPLIANCE WITH THE DETAILS SHOWN ON THE ERECTION DRAWINGS, SUCH AS BRACES, STIFFENERS, MEMBER LOCATIONS AND PROPER APPLICATION OF JOINT DETAILS AT EACH CONNECTION.
5. THE QAI SHALL BE ON THE PREMISES FOR INSPECTION DURING THE PLACEMENT OF ANCHOR RODS AND OTHER EMBEDMENTS SUPPORTING STRUCTURAL STEEL FOR COMPLIANCE WITH THE CONSTRUCTION DOCUMENTS. AS A MINIMUM, THE DIAMETER, GRADE, TYPE AND LENGTH OF THE ANCHOR ROD OR EMBEDDED ITEM, AND THE EXTENT OR DEPTH OF EMBEDMENT INTO THE CONCRETE, SHALL BE VERIFIED PRIOR TO PLACEMENT OF THE CONCRETE.
6. THE QAI SHALL INSPECT THE FABRICATED STEEL OR ERECTED STEEL FRAME, AS APPROPRIATE, TO VERIFY COMPLIANCE WITH THE DETAILS SHOWN ON THE CONSTRUCTION DOCUMENTS, SUCH AS BRACES, STIFFENERS, MEMBER LOCATIONS AND PROPER APPLICATION OF JOINT DETAILS AT EACH CONNECTION.
7. QUALITY ASSURANCE (QA) INSPECTIONS, EXCEPT NONDESTRUCTIVE TESTING (NDT), MAY BE WAIVED WHEN THE WORK IS PERFORMED IN A FABRICATING SHOP OR BY AN ERECTOR APPROVED BY THE AUTHORITY HAVING JURISDICTION (AHJ) TO PERFORM THE WORK WITHOUT QA. NDT OF WELDS COMPLETED IN AN APPROVED FABRICATOR'S SHOP MAY BE PERFORMED BY THAT FABRICATOR WHEN APPROVED BY THE AHJ. WHEN THE FABRICATOR PERFORMS THE NDT, THE QA AGENCY SHALL REVIEW THE FABRICATOR'S NDT REPORTS.
8. AT COMPLETION OF FABRICATION, THE APPROVED FABRICATOR SHALL SUBMIT A CERTIFICATE OF COMPLIANCE TO THE AHJ STATING THAT THE MATERIALS SUPPLIED AND WORK PERFORMED BY THE FABRICATOR ARE IN ACCORDANCE WITH THE CONSTRUCTION DOCUMENTS. AT COMPLETION OF ERECTION, THE APPROVED ERECTOR SHALL SUBMIT A CERTIFICATE OF COMPLIANCE TO THE AHJ STATING THAT THE MATERIALS SUPPLIED AND WORK PERFORMED BY THE ERECTOR ARE IN ACCORDANCE WITH THE CONSTRUCTION DOCUMENTS.
9. IDENTIFICATION AND REJECTION OF MATERIAL OR WORKMANSHIP THAT IS NOT IN CONFORMANCE WITH THE CONSTRUCTION DOCUMENTS, SHALL BE PERMITTED AT ANY TIME DURING THE PROGRESS OF THE WORK. HOWEVER, THIS PROVISION SHALL NOT RELIEVE THE OWNER OR THE INSPECTOR OF THE OBLIGATION FOR TIMELY, IN-SEQUENCE INSPECTIONS. NONCONFORMING MATERIAL AND WORKMANSHIP SHALL BE BROUGHT TO THE IMMEDIATE ATTENTION OF THE FABRICATOR OR ERECTOR, AS APPLICABLE.
10. NONCONFORMING MATERIAL OR WORKMANSHIP SHALL BE BROUGHT INTO CONFORMANCE, OR MADE SUITABLE FOR ITS INTENDED PURPOSE AS DETERMINED BY THE ENGINEER OF RECORD.
11. CONCURRENT WITH THE SUBMITTAL OF SUCH REPORTS TO THE AHJ, EOR OR OWNER, THE QA AGENCY SHALL SUBMIT TO THE FABRICATOR AND ERECTOR:
    (1) NONCONFORMANCE REPORTS
    (2) REPORTS OF REPAIR, REPLACEMENT OR ACCEPTANCE OF NONCONFORMING ITEMS.

FFKR ARCHITECTS
730 Pacific Avenue · Salt Lake City, Utah 84104
O 801.521.6186 · FFKR.COM
50 YEARS 1965 2019
ARW ENGINEERS
structural consultants
1184 W. Park Cir. Ogden, Utah 84404
ph: 801.782.6008 fx: 801.782.4656

U OF U BLDG. 303 SEISMIC UPGRADE, PROJ. #22508 -PHASE 4

SALT LAKE CITY UTAH

PERMIT SET - 10-10-2022

PROFESSIONAL STRUCTURAL ENGINEER
10/10/22
No. 276196
Robert M. Moyle
STATE OF UTAH

△ DATE REVISION

PROJECT NUMBER 18923

SCHEDULES

SG-003

10/10/2022 2:21:48 PM

2018 IBC CONC. REBAR LAP SPLICE SCHEDULE

FOR CONCRETE APPLICATIONS (ACI 318 - 14)

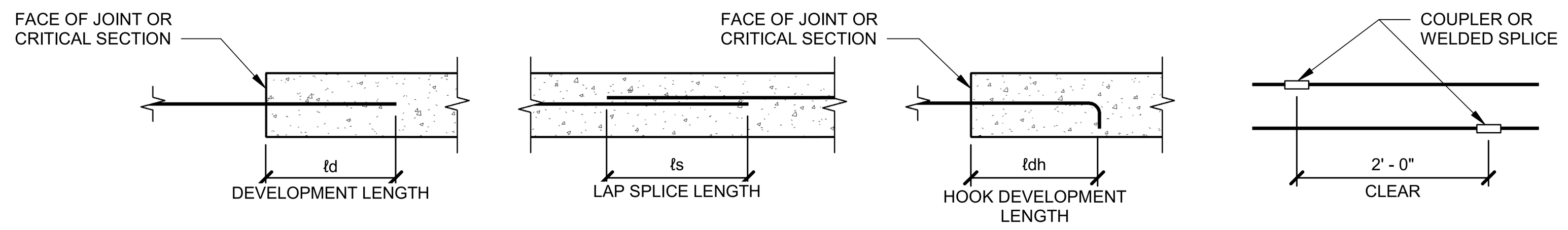

CONCRETE REINFORCING & SPLICE LENGTHS (IN)

BAR LOCATION	CONCRETE TYPE	CONCRETE STRENGTH	#3 ℓd	#3 ℓs	#3 ℓdh	#4 ℓd	#4 ℓs	#4 ℓdh	#5 ℓd	#5 ℓs	#5 ℓdh	#6 ℓd	#6 ℓs	#6 ℓdh	#7 ℓd	#7 ℓs	#7 ℓdh	#8 ℓd	#8 ℓs	#8 ℓdh	#9 ℓd	#9 ℓdh	#10 ℓd	#10 ℓdh	#11 ℓd	#11 ℓdh	COMMENTS
VERT. WALL BARS, FILL ON METAL DECK	NWC	3000 PSI	17	22	8	22	29	8	28	36	10	33	43	12	48	62	13	55	72	15	62	17	69	19	76	30	
HORIZ. WALL BARS, FOOTING TOP BARS	NWC	3000 PSI	17	22	8	22	29	8	28	36	10	33	43	12	48	62	13	55	72	15	62	17	69	19	76	30	
BEAM BOTTOM BARS, COLUMN BARS	NWC	3000 PSI	17	22	8	22	29	11	28	36	14	33	43	16	48	62	19	55	72	22	62	25	69	27	76	30	
FOOTING BOTTOM BARS	NWC	3000 PSI	12	16	8	14	18	8	17	22	10	20	26	12	29	38	13	33	43	15	37	17	42	19	46	30	
BEAM TOP BARS	NWC	3000 PSI	22	29	8	29	38	11	36	47	14	43	56	16	63	82	19	72	94	22	81	25	90	27	98	30	
SLAB ON GRADE	NWC	3000 PSI	12	16	8	14	18	8	17	22	10	20	26	12	32	42	13	42	55	15	53	17	69	19	76	30	

CONCRETE REINFORCING & SPLICE LENGTHS (IN)

BAR LOCATION	CONCRETE TYPE	CONCRETE STRENGTH	#3 ℓd	#3 ℓs	#3 ℓdh	#4 ℓd	#4 ℓs	#4 ℓdh	#5 ℓd	#5 ℓs	#5 ℓdh	#6 ℓd	#6 ℓs	#6 ℓdh	#7 ℓd	#7 ℓs	#7 ℓdh	#8 ℓd	#8 ℓs	#8 ℓdh	#9 ℓd	#9 ℓdh	#10 ℓd	#10 ℓdh	#11 ℓd	#11 ℓdh	COMMENTS
VERT. WALL BARS, FILL ON METAL DECK	NWC	4500 PSI	14	18	7	18	23	6	23	30	8	27	35	9	40	52	11	45	59	13	51	14	56	16	62	25	
HORIZ. WALL BARS, FOOTING TOP BARS	NWC	4500 PSI	14	18	7	18	23	6	23	30	8	27	35	9	40	52	11	45	59	13	51	14	56	16	62	25	
BEAM BOTTOM BARS, COLUMN BARS	NWC	4500 PSI	14	18	7	18	23	9	23	30	11	27	35	13	40	52	16	45	59	18	51	20	56	22	62	25	
FOOTING BOTTOM BARS	NWC	4500 PSI	12	16	7	12	16	6	14	18	8	17	22	9	24	31	11	27	35	13	31	14	34	16	37	25	
BEAM TOP BARS	NWC	4500 PSI	18	23	7	24	31	9	30	39	11	35	46	13	51	66	16	59	77	18	66	20	73	22	80	25	
SLAB ON GRADE	NWC	4500 PSI	12	16	7	12	16	6	14	18	8	17	22	9	27	35	11	34	44	13	44	14	56	16	62	25	

CONCRETE REINFORCING & SPLICE LENGTHS (IN)

BAR LOCATION	CONCRETE TYPE	CONCRETE STRENGTH	#3 ℓd	#3 ℓs	#3 ℓdh	#4 ℓd	#4 ℓs	#4 ℓdh	#5 ℓd	#5 ℓs	#5 ℓdh	#6 ℓd	#6 ℓs	#6 ℓdh	#7 ℓd	#7 ℓs	#7 ℓdh	#8 ℓd	#8 ℓs	#8 ℓdh	#9 ℓd	#9 ℓdh	#10 ℓd	#10 ℓdh	#11 ℓd	#11 ℓdh	COMMENTS
VERT. WALL BARS, FILL ON METAL DECK	NWC	6000 PSI	12	16	6	16	21	6	20	26	7	24	31	8	34	44	9	39	51	11	44	12	49	14	54	21	
HORIZ. WALL BARS, FOOTING TOP BARS	NWC	6000 PSI	12	16	6	16	21	6	20	26	7	24	31	8	34	44	9	39	51	11	44	12	49	14	54	21	
BEAM BOTTOM BARS, COLUMN BARS	NWC	6000 PSI	12	16	6	16	21	8	20	26	10	24	31	12	34	44	14	39	51	15	44	17	49	19	54	21	
FOOTING BOTTOM BARS	NWC	6000 PSI	12	16	6	12	16	6	12	16	7	14	18	8	21	27	9	24	31	11	27	12	30	14	32	21	
BEAM TOP BARS	NWC	6000 PSI	16	21	6	21	27	8	26	34	10	31	40	12	45	59	14	51	66	15	57	17	63	19	70	21	
SLAB ON GRADE	NWC	6000 PSI	12	16	6	12	16	6	12	16	7	14	18	8	23	30	9	30	39	11	38	12	49	14	54	21	

NOTES :
1. MECHANICAL COUPLERS MAY BE USED IN LIEU OF LAP SPLICES SHOWN. SEE STRUCTURAL NOTES FOR MINIMUM COUPLER CAPACITY. WHERE MECHANICAL COUPLERS ARE USED, STAGGER ADJACENT SPLICES A MINIMUM OF 24" AS INDICATED ABOVE.
2. DEVELOPMENT LENGTHS SHALL BE INCREASED BY 50% FOR STRAIGHT BAR DEVELOPMENT AND 20% FOR HOOKED BARS WHERE EPOXY COATING IS USED.
3. WHEN SPLICING BARS OF DIFFERENT SIZES, USE LAP SPLICE LENGTH OF LARGER BARS UNO.
4. SPLICE BARS LARGER THAN #8 USING MECHANICAL COUPLERS.

SPECIAL INSPECTION SCHEDULE [1, 2]

ESTABLISHED PER 2018 IBC SECTION 110 AND CHAPTER 17

ITEM	CONTINUOUS[3]	PERIODIC[3]	REFERENCE	COMMENTS
PRE-FAB CONSTRUCTION (IBC 1704.2)			REFERENCE NOTES P1 & P2	P1. SPECIAL INSPECTION IS NOT REQUIRED WHERE THE WORK IS DONE ON THE PREMISES OF A FABRICATOR REGISTERED AND APPROVED TO PERFORM SUCH WORK WITHOUT SPECIAL INSPECTION, PROVIDED THE FABRICATOR COMPLIES WITH IBC. P2. INSPECTION FOR PREFABRICATED CONSTRUCTION SHALL BE THE SAME AS IF THE MATERIAL USED IN THE CONSTRUCTION TOOK PLACE ON SITE. SPECIAL INSPECTION WILL NOT BE REQUIRED DURING PREFABRICATION IF THE APPROVED AGENCY CERTIFIES THE CONSTRUCTION AND FURNISHES EVIDENCE OF COMPLIANCE. (SEE NOTE 2).
CONCRETE CONSTRUCTION (IBC 1705.3)			SEE IBC TABLE 1705.3 - REF. NOTE C1	C1. SPECIAL INSPECTION IS NOT REQUIRED FOR CONC. ISOLATED SPREAD FOOTINGS, CONTINUOUS FOOTINGS, NON-STRUCTURAL SLABS, FOUNDATION WALLS, PATIOS, DRIVEWAYS, AND SIDEWALKS PROVIDED THE REQUIREMENTS OF IBC 1705.3 ARE MET. C2. PERIODIC SPECIAL INSPECTION IS ALLOWED FOR VERIFICATION OF THE WELDABILITY OF REINFORCING STEEL RESISTING FLEXURAL AND AXIAL FORCES IN INTERMEDIATE AND SPECIAL MOMENT FRAMES, BOUNDARY ELEMENTS OF SPECIAL REINFORCED CONCRETE SHEAR WALLS, AND SHEAR REINFORCEMENT. PERIODIC SPECIAL INSPECTION IS ALLOWED FOR WELDING OF OTHER ASTM A 706 REINFORCING STEEL NOT INCLUDED IN THE CONTINUOUS SPECIAL INSPECTION REQUIREMENTS NOTED ABOVE. C3. PERFORM AIR, SLUMP AND TEMP. TESTS WHEN CONCRETE SAMPLES ARE CAST. C4. PERIODIC SPECIAL INSPECTION IS REQUIRED FOR VERIFICATION OF IN-SITU CONCRETE STRENGTH FOR POST-TENSIONED CONCRETE PRIOR TO TENSIONING TENDONS OR REMOVING SHORING OR FORMS. C5. EPOXY AND EXPANSION ANCHORS INTO MASONRY OR CONCRETE MAY BE USED ONLY WHEN APPROVED BY ARCHITECT. AND/OR ENGINEER USING AN APPROVED PRODUCT WITH CURRENT PUBLISHED ICC RESEARCH REPORT NUMBERS. COORDINATE CONTINUOUS/PERIODIC SPECIAL INSPECTION REQUIREMENTS WITH ICC REPORT.
REINFORCING STEEL PLACEMENT		●		
WELDING OF REINFORCING STEEL	●	●	REFERENCE NOTE C2	
EMBEDDED BOLTS & PLATES	●			
VERIFYING REQUIRED DESIGN MIX		●		
CONCRETE PLACEMENT / SAMPLING	●		REFERENCE NOTE C3	
CURING TEMPERATURE / TECHNIQUES		●		
ERECTION OF PRECAST MEMBERS		●		
VERIFICATION OF IN-SITU STRENGTH		●	REFERENCE NOTE C4	
EPOXY / EXPANSION ANCHOR PLACEMENT	●	●	REFERENCE NOTE C5	
MASONRY CONSTRUCTION (IBC 1705.4)			SEE TMS 402/ACI 550 TABLE 1.19.2 (NON-ESSENTIAL)	M1. PERIODIC SPECIAL INSPECTION IS ALLOWED FOR VERIFICATION OF THE WELDABILITY OF REINFORCING STEEL OTHER THAN ASTM A 706 IN ACCORDANCE WITH ANSI / AWS D1.4. CONTINUOUS SPECIAL INSPECTION IS REQUIRED FOR REINFORCING STEEL RESISTING FLEXURAL AND AXIAL FORCES IN INTERMEDIATE AND SPECIAL MOMENT FRAMES, BOUNDARY ELEMENTS OF SPECIAL REINFORCED CONCRETE SHEAR WALLS, AND SHEAR REINFORCEMENT. PERIODIC SPECIAL INSPECTION IS ALLOWED FOR WELDING OF OTHER ASTM A 706 REINFORCING STEEL NOT INCLUDED IN THE CONTINUOUS SPECIAL INSPECTION REQUIREMENTS NOTED ABOVE. M2. CONTINUOUS SPECIAL INSPECTION IS REQUIRED FOR ESSENTIAL FACILITIES (TMS 602-16/ACI 530.1 TABLE 3). M3. EPOXY AND EXPANSION ANCHORS INTO MASONRY OR CONCRETE MAY BE USED ONLY WHEN APPROVED BY ARCHITECT AND/OR ENGINEER USING AN APPROVED PRODUCT WITH CURRENT PUBLISHED ICC RESEARCH REPORT NUMBERS. COORDINATE CONTINUOUS/PERIODIC SPECIAL INSPECTION REQUIREMENTS WITH ICC REPORT.
AS MASONRY CONSTRUCTION BEGINS, VERIFY:				
SITE PREPARED MORTAR		●		
MORTAR JOINTS		●		
REINFORCEMENT / CONNECTORS		●		
GRADE & SIZE OF TENDONS & ANCHORAGES		●		
INSPECTION SHALL VERIFY:				
SIZE & LOCATION OF STRUCTURAL ELEMENTS		●		
TYPE, SIZE, & LOCATION OF ANCHORS		●	REFERENCE NOTE M2	
SIZE, GRADE & TYPE OF REINFORCEMENT		●		
WELDING OF REINFORCING BARS	●		REFERENCE NOTE M1	
HOT OR COLD WEATHER PROTECTION		●		
PRIOR TO GROUTING, VERIFY:				
CLEAN GROUT SPACE		●	REFERENCE NOTE M2	
PLACEMENT OF REINFORCEMENT CONNECTORS, TENDONS AND ANCHORS.		●		
PROPORTIONS OF SITE PREPARED GROUT		●		
CONSTRUCTION OF MORTAR JOINTS		●		
GROUT PLACEMENT	●			
PREPARATION OF TEST SPECIMENS / PRISMS	●			
COMPLIANCE W/ CONST. DOCS. / SUBMITTALS		●		
EPOXY / EXPANSION ANCHOR PLACEMENT	●	●	REFERENCE NOTE M3	
VERIFICATION OF f'm AND f'aac		●		
SELF CONSOLIDATING GROUT:				
VERIFY SLUMP FLOW AND VSI	●			
COLD FORMED FRAMING (IBC 1705.11.2 & 1705.12.32)				CF1. SPECIAL INSPECTION IS NOT REQUIRED FOR COLD-FORMED STEEL LIGHT-FRAME SHEAR WALLS, BRACES, DIAPHRAGMS, COLLECTORS (DRAG STRUTS) AND HOLDOWNS WHERE SHEATHING IS WOOD STRUCTURAL PANEL OR STEEL SHEETS ON ONLY ONE SIDE OF THE SHEAR WALL, SHEAR PANEL OR DIAPHRAGM ASSEMBLY AND THE FASTENER SPACING OF THE SHEATHING IS MORE THAN 4"o.c.
LIGHT GAUGE METAL FRAMING WELDING		●		
SHEAR WALL & DIAPHRAGM ATTACHMENTS		●		
DRAG STRUT & BRACE INSTALLATION		●		
HOLDOWN INSTALLATION		●		
SOILS (IBC 1705.6)			REFERENCE NOTE F1	F1. SPECIAL INSPECTION OF SOILS SHALL REFERENCE THE APPROVED SOILS REPORT TO DETERMINE COMPLIANCE. F2. WHERE SOILS REPORT IS NOT PROVIDED SPECIAL INSPECTIONS ARE REQUIRED TO VERIFY THAT THE IN-PLACE DRY DENSITY OF THE COMPACTED FILL IS NOT LESS THAN 90 PERCENT OF THE MAXIMUM DRY DENSITY AT OPTIMUM MOISTURE CONTENT DETERMINED IN ACCORDANCE WITH ASTM D 1557.
VERIFY ADEQUATE MATERIALS BELOW FOOTINGS		●	REFERENCE NOTE F1	
EXCAVATIONS EXTEND TO PROPER DEPTH AND REACH PROPER MATERIAL		●	REFERENCE NOTE F2	
CLASSIFY & TEST CONTROLLED FILL MATERIALS		●	REFERENCE NOTE F2	
PERFORM MATERIALS, DENSITIES, AND LIFT THICKNESSES DURING PLACEMENT AND COMPACTION OF CONTROLLED FILL.	●		REFERENCE NOTE F1	
PROPERLY PREPARED SITE AND SUB-GRADE PRIOR TO FILL.		●	REFERENCE NOTE F1	
PILE FOUNDATIONS (IBC 1705.7)			REFERENCE NOTE PF1 AND PF2	PF1. FOR STEEL ELEMENTS, PERFORM ADDITIONAL SPECIAL INSPECTIONS IN ACCORDANCE WITH THE STRUCTURAL STEEL INSPECTION SCHEDULE ALSO INCLUDED IN THESE DRAWINGS. PF2. FOR CONCRETE ELEMENTS AND CONCRETE FILLED ELEMENTS, PERFORM TESTS AND ADDITIONAL SPECIAL INSPECTIONS IN ACCORDANCE WITH SECTION 1705.3.
VERIFY PILE MATERIALS, SIZES, AND LENGTHS	●			
DETERMINE CAPACITIES OF TEST PILES & CONDUCT ADDITIONAL LOAD TESTES, AS REQUIRED.	●			
INSPECT DRIVING/DRILLING OPERATIONS AND MAINTAIN COMPLETE AND ACCURATE RECORDS FOR EACH ELEMENT.	●			
VERIFY PLACEMENT LOCATIONS, PLUMBNESS, HAMMER DATA, REQUIRED PENETRATIONS, AND RECORD FINAL TIP AND BUTT ELEVATIONS AND DOCUMENT ANY PILE DAMAGE.	●			

GENERAL SPECIAL INSPECTION NOTES :

1. THE ITEMS MARKED WITH A "●" IN THE SPECIAL INSPECTION SCHEDULE SHALL BE INSPECTED IN ACCORDANCE WITH IBC CHAPTER 17 BY A CERTIFIED SPECIAL INSPECTOR FROM AN ESTABLISHED TESTING AGENCY. FOR MATERIAL SAMPLING AND TESTING REQUIREMENTS, REFER TO THE MATERIAL SAMPLING AND TESTING SECTION, THE PROJECT SPECIFICATIONS, AND THE SPECIFIC GENERAL NOTES SECTIONS. THE TESTING AGENCY SHALL SEND COPIES OF ALL STRUCTURAL TESTING AND INSPECTION REPORTS DIRECTLY TO THE ARCHITECT, ENGINEER, CONTRACTOR, AND BUILDING OFFICIAL. ANY ITEMS WHICH FAIL TO COMPLY WITH THE APPROVED CONSTRUCTION DOCUMENTS SHALL IMMEDIATELY BE BROUGHT TO THE ATTENTION OF THE CONTRACTOR FOR CORRECTION. IF DISCREPANCIES ARE NOT CORRECTED, THEY SHALL BE BROUGHT TO THE ATTENTION OF THE BUILDING OFFICIAL, ARCHITECT, AND ENGINEER PRIOR TO COMPLETION OF THAT PHASE OF WORK. SPECIAL INSPECTION TESTING REQUIREMENTS APPLY EQUALLY TO ALL BIDDER DESIGNED COMPONENTS.
2. ANY CONSTRUCTION OR MATERIAL THAT HAS FAILED INSPECTION SHALL BE SUBJECT TO REMOVAL AND REPLACEMENT.
3. CONTINUOUS SPECIAL INSPECTION MEANS THE FULL-TIME OBSERVATION OF WORK REQUIRING SPECIAL INSPECTION BY AN APPROVED SPECIAL INSPECTOR WHO IS PRESENT IN THE AREA WHERE THE WORK IS BEING PERFORMED. PERIODIC SPECIAL INSPECTION MEANS THE PART-TIME OR INTERMITTENT OBSERVATION OF WORK REQUIRING SPECIAL INSPECTION BY AN APPROVED SPECIAL INSPECTOR WHO IS PRESENT IN THE AREA WHERE THE WORK HAS BEEN OR IS BEING PERFORMED AND AT THE COMPLETION OF THE WORK.

MASONRY WALL SCHEDULE

MARK	THICK.	VERT. REINF. SIZE	VERT. REINF. SPACE	HORIZ. BOND BEAM REINF. NO.	SIZE	SPACE	@ ROOF	@ FLOOR	COMMENTS
MW-1	8"	#5	24"	(2)	#4	48"o.c.	(2) #4	(2) #4	

NOTES:
1. FOR ANY CMU WALLS NOT SPECIFICALLY CALLED OUT IN PLANS, USE MW1.
2. VERTICAL REINFORCING TO BE @ CENTERLINE OF WALL UNLESS OTHERWISE NOTED.
3. SOLID GROUTING OF WALLS IS UNACCEPTABLE EXCEPT WHERE SPECIFICALLY NOTED.
4. SEE STRUCTURAL NOTES FOR ADDITIONAL INFORMATION.

EXISTING MEMBER UPGRADE SCHEDULE

MARK	EXISTING MEMBER	MEMBER UPGRADE	CONFIGURATION	WELD A	WELD B
EMU-1	12B14	PL. 1/4" x 5"	1	3/16"	2"-12"
EMU-2	12B19	PL. 3/8" x 5"	1	1/4"	3"-12"
EMU-3	12B19	C6X13	2	1/4"	4"-12"
EMU-4	14WF30	PL. 5/8" x 8"	1	1/4"	3"-12"
EMU-5	14WF30	HSS8X4X1/2	3	1/2"	4"-12"
EMU-6	18WF50	C12X30	2	5/16"	4"-12"
EMU-7	18WF60	C10X25	2	5/16"	5"-12"
EMU-8	21WF62	C10X15.3	2	5/16"	4"-12"
EMU-9	16WF40	PL. 5/8" x 8"	1	1/4"	3"-12"
EMU-10	12WF27	PL. 1/2" x 8"	1	1/4"	3"-12"

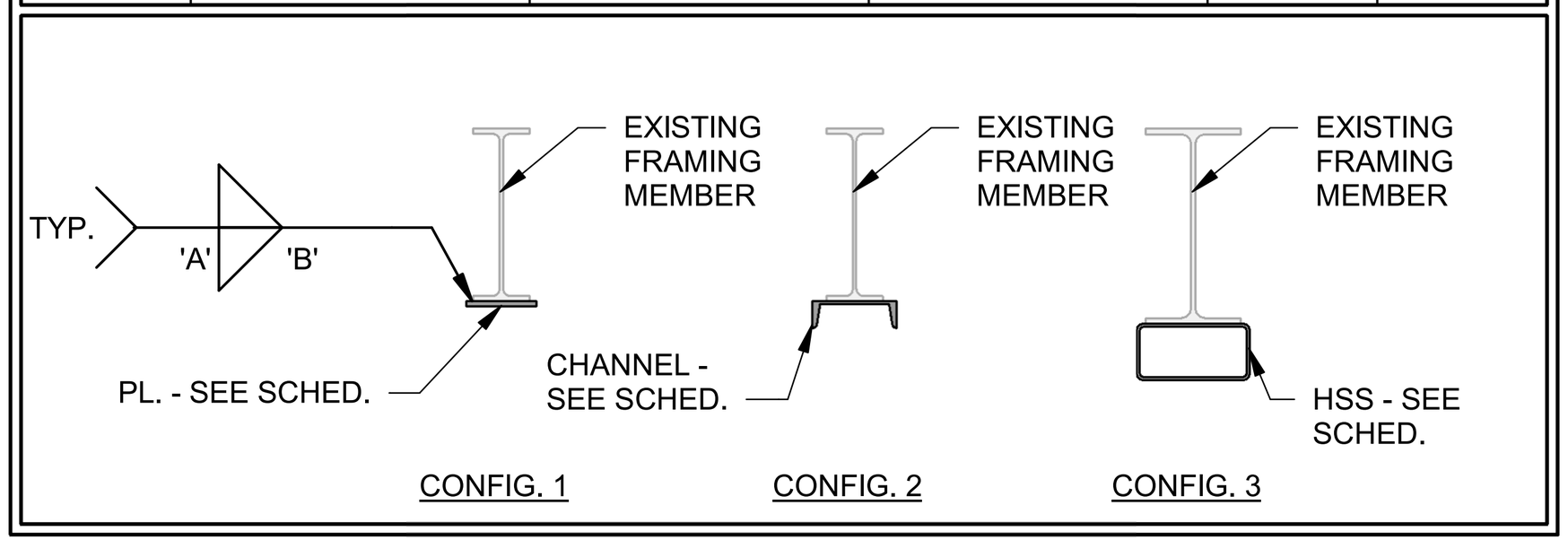

CONCRETE FOUNDATION WALL SCHEDULE

MARK	THICKNESS "T"	VERT. INSIDE FACE SIZE	VERT. INSIDE FACE SPACING	VERT. CENTER OF WALL SIZE	VERT. CENTER OF WALL SPACING	VERT. OUTSIDE FACE SIZE	VERT. OUTSIDE FACE SPACING	HORIZ. EACH FACE SIZE	HORIZ. EACH FACE SPACING	HORIZ. CENTER OF WALL SIZE	HORIZ. CENTER OF WALL SPACING	TOP & BOTTOM BARS
CW-1	8"	---	---	#5	18"o.c.	---	---	---	---	#5	18"o.c.	(2) #5
CW-2	14"	#5	18"o.c.	---	---	#5	18"o.c.	#5	18"o.c.	---	---	(2) #5
CW-3	15"	#5	18"o.c.	---	---	#5	18"o.c.	#5	18"o.c.	---	---	(2) #5
CW-4	28"	#5	16"o.c.	#5	16"o.c.	#5	16"o.c.	#5	16"o.c.	#5	16"o.c.	(3) #5
CW-5	12"	#5	18"o.c.	---	---	#5	18"o.c.	#5	18"o.c.	---	18"o.c.	(2) #5

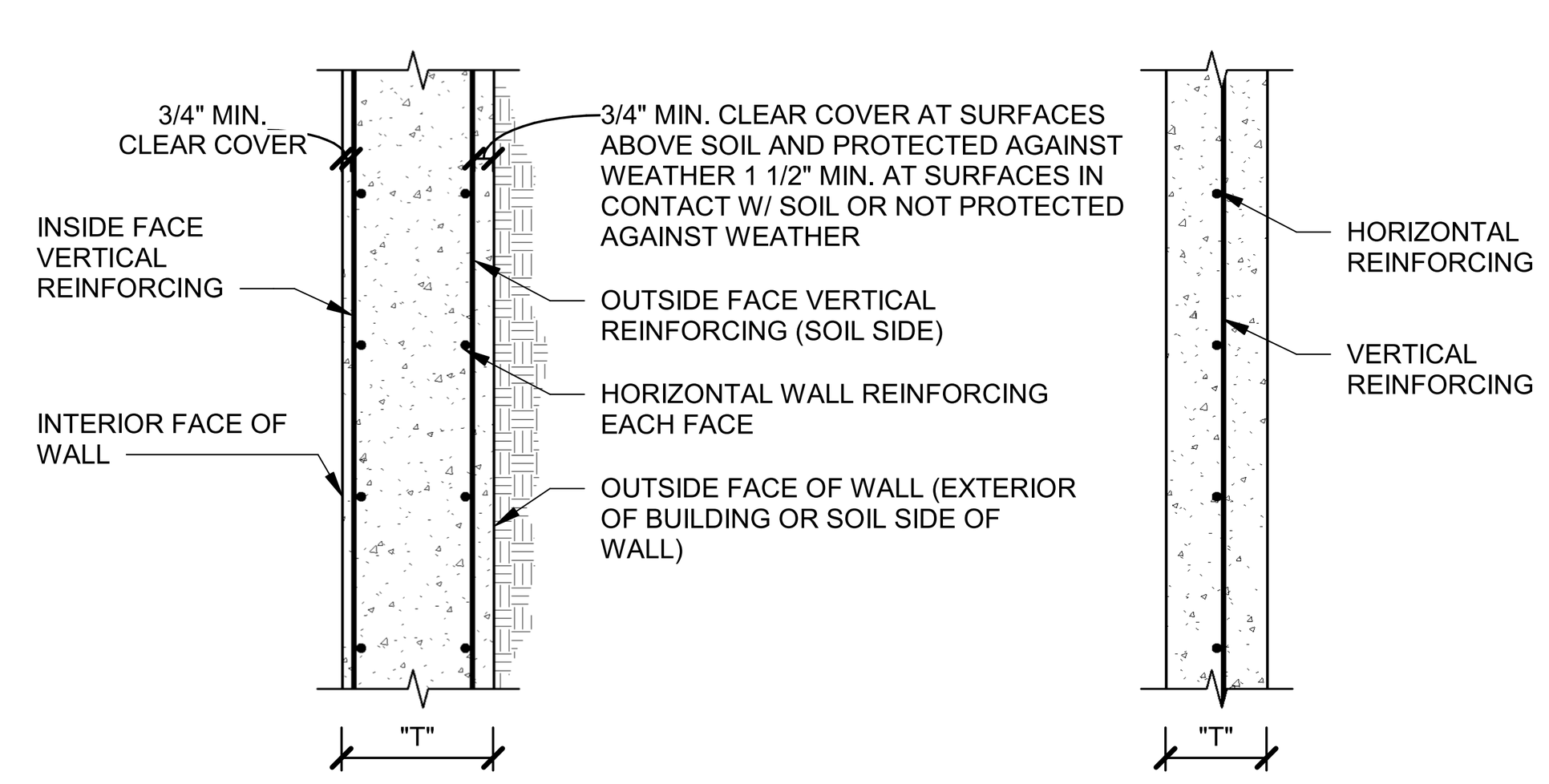

NOTE:
1. FOR ANY CONCRETE FOUNDATION WALLS NOT SPECIFICALLY CALLED OUT IN PLANS, USE CW-1.
2. VERTICAL REINFORCING TO BE AT CENTERLINE OF WALL UNLESS OTHERWISE NOTED.
3. SEE STRUCTURAL NOTES FOR ADDITIONAL INFORMATION.
4. EXTEND HORIZONTAL REINFORCING AROUND CORNERS OR ADD CORNER BARS AND LAP EACH WAY PER TYPICAL DETAIL.

BEAM CONNECTION SCHEDULE @ MASONRY WALL

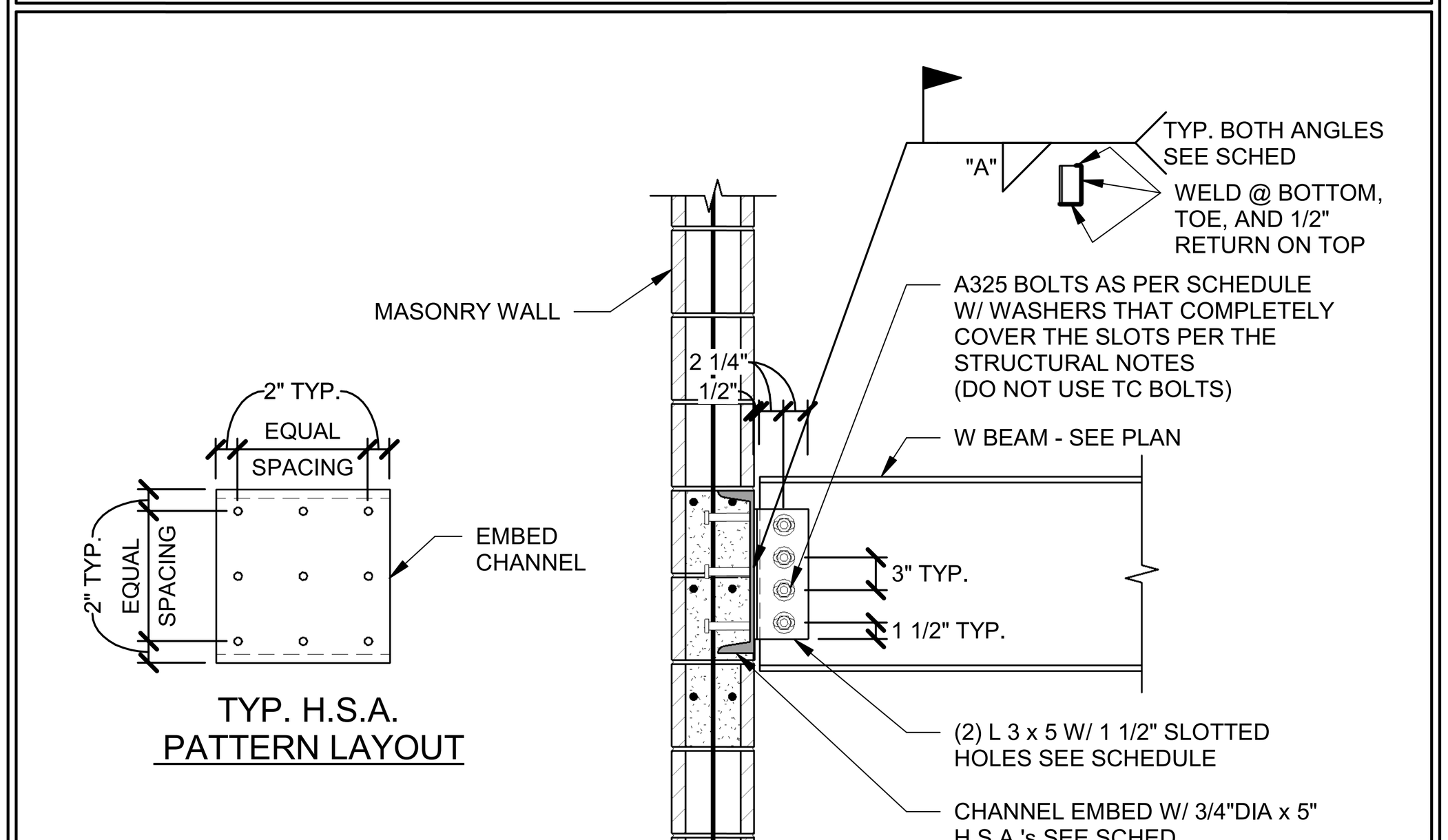

BEAM SIZE	ANGLE SIZE (EA. SIDE)	WELD 'A'	BOLTS	EMBED CHANNEL	# OF H.S.A.	H.S.A. PATTERN
W10, C10	3 x 5 x 5/16" x 0'-7"	1/4"	(2) 3/4"Ø	C12 x 20.7 x 1'-4"	6	⁝⁝⁝
W12, C12	3 x 5 x 5/16" x 0'-9"	1/4"	(3) 3/4"Ø	C12 x 20.7 x 1'-4"	6	⁝⁝⁝

1. AT THE CONTRACTORS OPTION, (2) C8 x 13.7 MAY BE SUBSTITUTED FOR THE C15 x 33.9. HSA PATTERN SHALL BE RECONFIGURED & EQUALLY DISTRIBUTED BETWEEN THE TWO CHANNELS.
2. DOUBLE CHANNELS SHALL BE WELDED TOGETHER WITH A 2" STITCH WELD EVERY 4" AT THE FLANGE TOE.

STEEL LOOSE LINTEL SCHEDULE

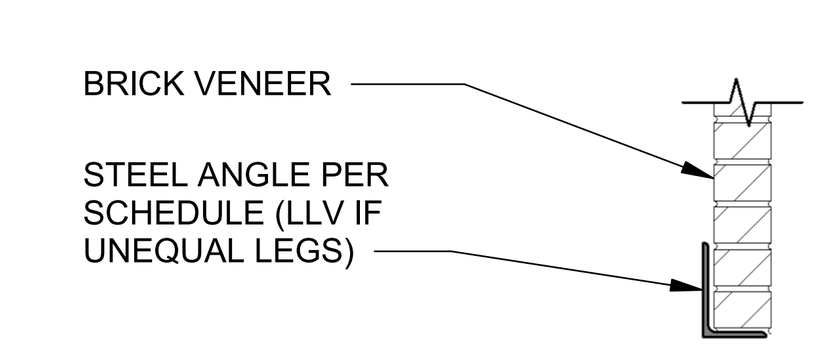

NOTE: PROVIDE 1" BEARING FOR EACH FOOT OF SPAN @ EACH END. (MIN. OF 6" BEARING @ EACH END)

CLEAR OPENING	SIZE OF ANGLE
UP TO 7'-0"	3-1/2" x 3-1/2" x 1/4"
7'-1" TO 9'-0"	5" x 3-1/2" x 1/4"
9'-1" TO 10'-0"	5" x 3-1/2" x 5/16"
10'-1" TO 11'-0"	5" x 3-1/2" x 3/8"
11'-1" TO 12'-0"	6" x 4" x 3/8"

FFKR ARCHITECTS
730 Pacific Avenue · Salt Lake City, Utah 84104
O 801.521.6186 · FFKR.COM

50 Years 1969 - 2019
ARW ENGINEERS
structural consultants
1594 W. Park Cir. Ogden, Utah 84404
ph. 801.782.6008 fx. 801.782.4656

U OF U BLDG. 303 SEISMIC UPGRADE, PROJ. #22508 -PHASE 4
SALT LAKE CITY UTAH

PERMIT SET - 10-10-2022

PROFESSIONAL STRUCTURAL ENGINEER 10/10/22 No. 276196 Robert M. Moyle STATE OF UTAH

△	DATE	REVISION
7	5/10/21	ASI #1

PROJECT NUMBER 18923

SCHEDULES

SG-004

10/10/2022 2:21:52 PM

WALL SCHEDULE

MARK	STUD	SPACING	TOP TRACK	BOTTOM TRACK	COMMENTS
SSW-1*	600S162-43	16" o.c.	600T125-43	600T125-43	BRIDGING @ 4'-0"o.c. WHERE SHEATHING OR GYP. IS ONLY ON (1) SIDE
SSW-2	800S162-43	16" o.c.	800T125-43	800T125-43	BRIDGING @ 4'-0"o.c. WHERE SHEATHING OR GYP. IS ONLY ON (1) SIDE

NOTE :
1. ATTACH BOTTOM TRACK TO SLAB PER 5/S-203-4.
2. WHERE NOT SPECIFICALLY INDICATED USE SSW-1.
3. * METAL STUDS FOR BUTTRESS WALLS ON SHEET S-302-4 ARE TO BE Fy = 50 ksi.

JAMB STUD SCHEDULE

MARK	MAX. OPENING	STUDS	COMMENTS
SSJ-1	5'-0"	(2) 600S162-43	TYPICAL 6" WALL - SEE DETAIL 4/S-203-4 FOR BOTTOM ATTACHMENT
SSJ-2	8'-0"	(3) 600S162-43	

NOTE : STITCH STUDS W/ 2"WELD @ 24"o.c. AS FOLLOWS :
43 MIL (18 GA.) 1/16" FILLET OR FLARE GROOVE
54 MIL (16 GA.) 1/16" FILLET OR FLARE GROOVE
68 MIL (14 GA.) 1/16" FILLET OR FLARE GROOVE
97 MIL (12 GA.) 3/32" FILLET OR FLARE GROOVE

HEADER SCHEDULE

MARK	MAX. OPENING	VERT. SECTIONS	HORIZ. SECTIONS	CONFIGURATION	HEADER CONNECTION	COMMENTS
SSH-1	5'-0"	(2) 600S162-43	(1) 600T125-43	1	2/S-203-4	USE (1) 600T125-43 FOR SILL WHERE APPLICABLE - SEE DETAIL 7/S-203-4
SSH-2	8'-0"	(2) 600S162-43	(2) 600T125-43	1	2/S-203-4	USE (1) 600T125-43 FOR SILL WHERE APPLICABLE - SEE DETAIL 7/S-203-4

NOTE: SEE NOTE K.4 REGARDING CONTINUITY OF HEADER MEMBERS

BRIDGING OPTIONS

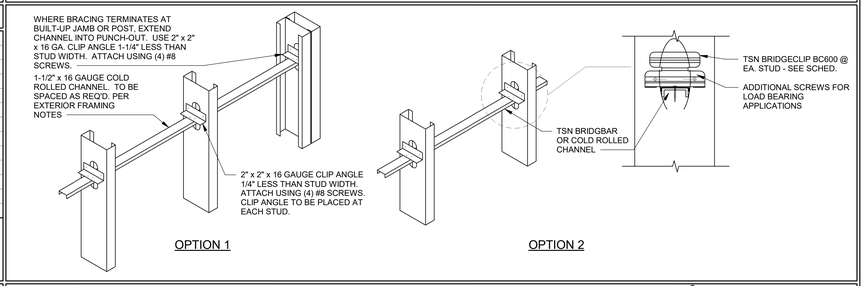

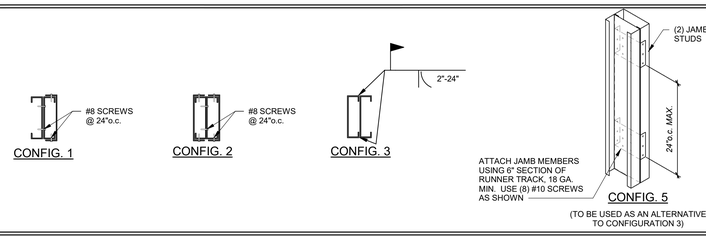

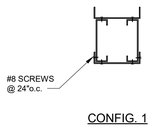

FFKR ARCHITECTS
730 Pacific Avenue · Salt Lake City, Utah 84104
O 801.521.6186 · FFKR.COM
50 YEARS 1969 2019
ENGINEERS
structural consultants
1184 W. Park Cir. Ogden, Utah 84404
ph. 801.782.6008 fx. 801.782.4656

U OF U BLDG. 303 SEISMIC UPGRADE, PROJ. #22508 -PHASE 4
SALT LAKE CITY UTAH
PERMIT SET - 10-10-2022

PROFESSIONAL STRUCTURAL ENGINEER
10/10/22
No. 276196
Robert M. Moyle
STATE OF UTAH

△ DATE REVISION

PROJECT NUMBER 18923

SCHEDULES

SG-005

10/10/2022 2:21:53 PM

OPERATING FLOOR UPGRADE NOTES:

1. TOP OF EXISTING STEEL IS 4741' - 5 3/4" U.N.O. (FIELD VERIFY) - FINISHED FLOOR ELEVATION IS 4742' - 0" (FIELD VERIFY)
2. BEAM DESIGNATION EXAMPLE: (E) C8X11.5 (+4")
   (E) = EXISTING, (N) = NEW
   C8X11.5 = BEAM SIZE
   (+4") = ELEVATION OF TOP OF BEAM IN RELATION TO TOP OF EXISTING STEEL OF CORRESPONDING FRAMING PLAN LEVEL
3. = EXISTING SUSPENDED CONCRETE SLAB.
4. = EXISTING GRATING
5. FIELD VERIFY ALL DIMENSIONS

OFFICE FOOTING AND FOUNDATION NOTES:

1. SEE SHEET SG-001 FOR GENERAL STRUCTURAL NOTES.
2. ALL FOOTINGS SHALL BE PLACED ON SOIL WHICH HAS BEEN PREPARED FOR THE BEARING PRESSURE SHOWN IN THE STRUCTURAL NOTES.
3. VERIFY ALL DIMENSIONS WITH DRAWINGS AND NOTIFY ENGINEER OF ANY DISCREPANCIES FOUND.
4. SEE SHEET SG-002 FOR FOOTING SCHEDULE.
5. PROVIDE DOWELS IN FOOTINGS / FOUNDATIONS TO MATCH VERTICAL WALL REINFORCING U.N.O.
6. SEE SHEET S-201-4 FOR TYPICAL FOOTING AND FOUNDATION DETAILS.
7. ALL EXTERIOR WALL FOOTINGS TO BEAR A MINIMUM DIMENSION BELOW EXTERIOR GRADE AS NOTED IN GENERAL STRUCTURAL NOTES.
8. FOUNDATION WALLS ARE DESIGNED AND DETAILED FOR THE COMPLETED CONDITION. CONTRACTOR IS RESPONSIBLE FOR MEANS AND METHODS OF CONSTRUCTION. BACKFILLED WALLS SHALL BE ADEQUATELY BRACED DURING CONSTRUCTION AND BACKFILLING TO PRODUCE PLUMB AND TRUE FINISHED WALLS.
9. ALL ANCHORS, ANCHOR BOLTS, DOWELS, EMBEDDED ITEMS, ETC. SHALL BE HELD IN PLACE PRIOR TO AND DURING CONCRETE AND/OR GROUT PLACEMENT.
10. COORDINATE ALL FOOTING DEPTHS (INTERIOR AND EXTERIOR) WITH DRAINS, CONDUITS, ETC. THAT MAY INTERFERE WITH FOOTINGS.
11. ALL TOP OF CONCRETE PIERS TO BE AT 4741'-4", UNLESS NOTED OTHERWISE.

CONCRETE SLAB NOTES:

1. SLAB ON GRADE SHALL BE 4" THICK REINFORCED CONCRETE U.N.O. SLAB SHALL BE UNDERLAIN BY FREE DRAINING MATERIAL AS PRESCRIBED IN THE SOILS REPORT.
2. SEE SHEET S-201-4 FOR CONTROL AND CONSTRUCTION JOINT INFORMATION.

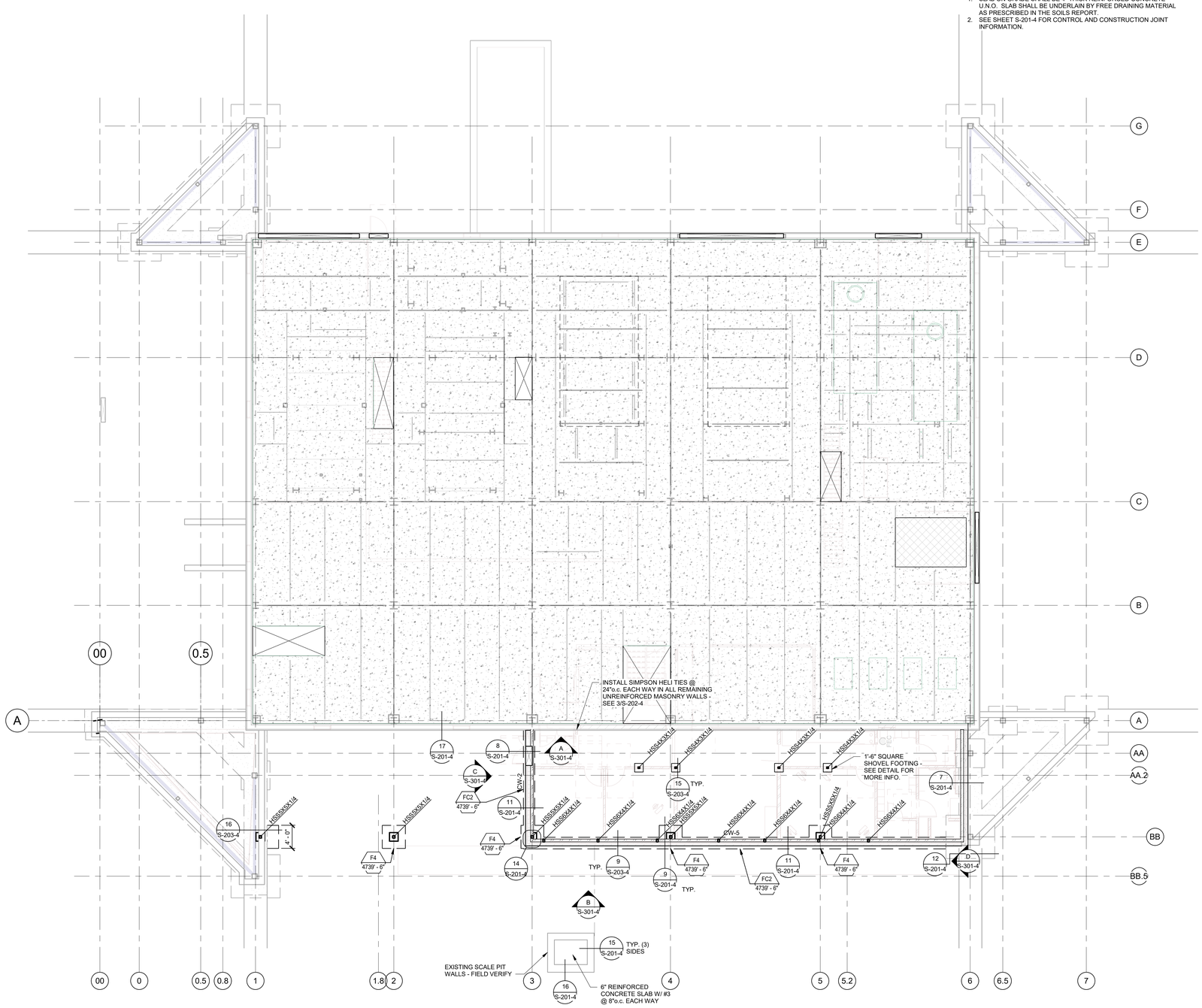

OPERATING FLOOR FRAMING PLAN / OFFICE FOUNDATION PLAN
SCALE : 1/8" = 1'-0"

A
S-101-4

NORTH

FFKR ARCHITECTS
730 Pacific Avenue · Salt Lake City, Utah 84104
O 801.521.6186 · FFKR.COM

50 Years 1969 2019
ENGINEERS
structural consultants
1984 W. Park Cir. Ogden, Utah 84404
ph: 801.782.6008 fx: 801.782.4656

U OF U BLDG. 303 SEISMIC UPGRADE, PROJ. #22508 -PHASE 4
SALT LAKE CITY UTAH

PERMIT SET - 10-10-2022

PROFESSIONAL STRUCTURAL ENGINEER
10/10/22
No. 276196
Robert M. Moyle
STATE OF UTAH

△ DATE REVISION

PROJECT NUMBER 18923

OPERATING FLOOR PLAN - PHASE 4

S-101-4

10/10/2022 2:21:19 PM

PIPING FLOOR FRAMING UPGRADE NOTES:

1. TOP OF EXISTING STEEL IS 4756' - 6 3/4" U.N.O. (FIELD VERIFY) - FINISHED FLOOR ELEVATION IS 4757' - 0" (FIELD VERIFY)
2. BEAM DESIGNATION EXAMPLE: (E) C8X11.5 (+4")
   (E) = EXISTING, (N) = NEW
   C8X11.5 = BEAM SIZE
   (+4") = ELEVATION OF TOP OF BEAM IN RELATION TO TOP OF EXISTING STEEL OF CORRESPONDING FRAMING PLAN LEVEL
3. = EXISTING GRATING
4. = EXISTING SUSPENDED CONCRETE SLAB
5. = NEW GRATING
6. = 5" TOTAL THICKNESS LIGHTWEIGHT CONCRETE SLAB ON 22 GA. B DECK. REINFORCE W/ #5 @ 12"o.c. EACH WAY.
7. ( ) DENOTES NUMBER OF 3/4"Ø x 4" LONG HSA UNIFORMLY SPACED ALONG BEAM TOP FLANGE.

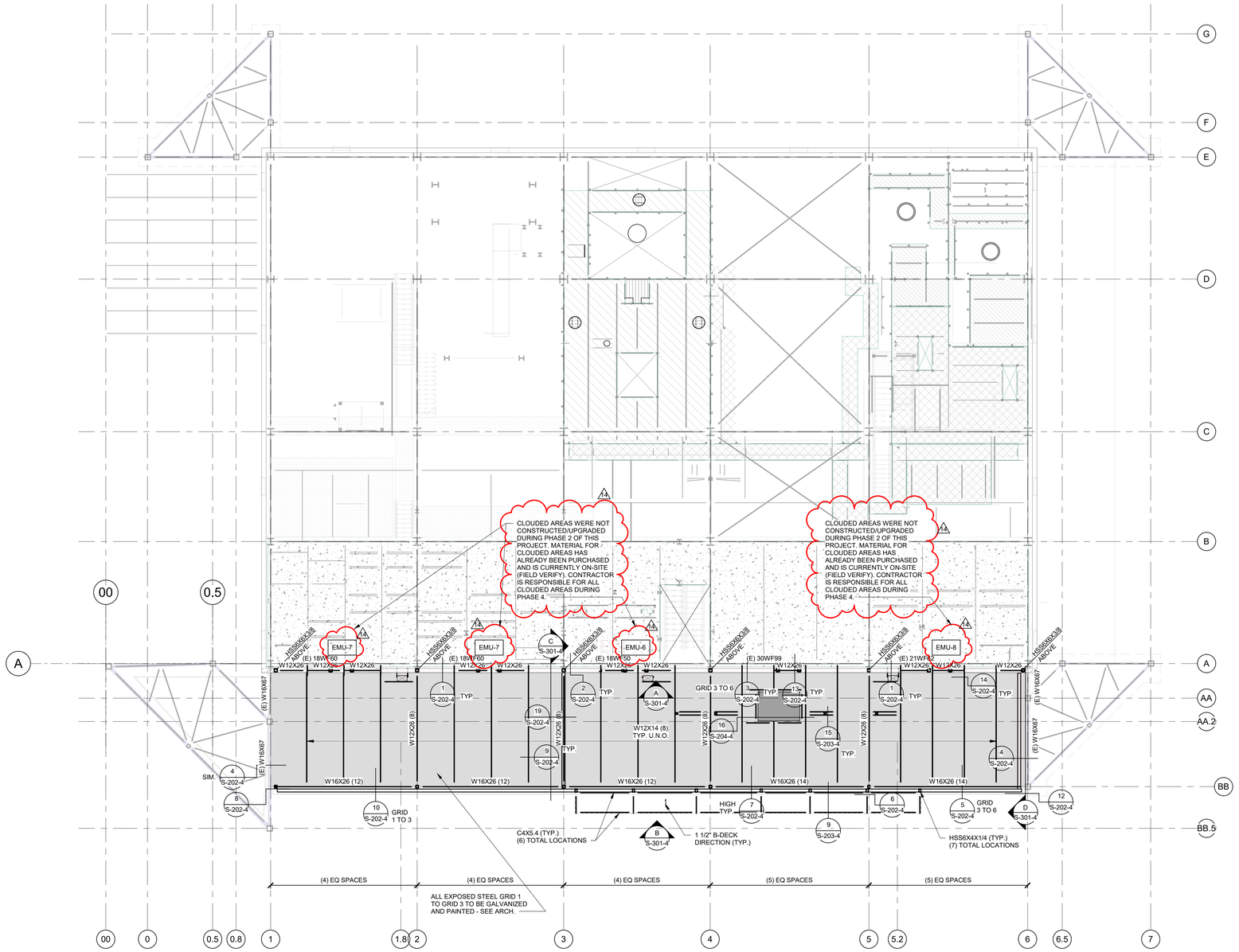

PIPING FLOOR FRAMING PLAN / OFFICE ROOF AND CANOPY FRAMING PLAN

SCALE : 1/8" = 1'-0"

A S-102-4

NORTH

FFKR ARCHITECTS
730 Pacific Avenue · Salt Lake City, Utah 84104
O 801.521.6186 · FFKR.COM

50 Years 1963 2019
ENGINEERS
structural consultants
1984 W. Park Cir. Ogden, Utah 84404
ph: 801.782.6008 fx: 801.782.4656

U OF U BLDG. 303 SEISMIC UPGRADE, PROJ. #22508 -PHASE 4

SALT LAKE CITY UTAH

PERMIT SET - 10-10-2022

PROFESSIONAL STRUCTURAL ENGINEER
10/10/22
No. 276196
Robert M. Moyle
STATE OF UTAH

△	DATE	REVISION
14	5/16/22	ADDENDUM #1

PROJECT NUMBER 18923

PIPING FLOOR PLAN - PHASE 4

S-102-4

10/10/2022 2:21:21 PM

SUB-FAN FLOOR FRAMING PLAN - PHASE 2

SCALE: 1/8" = 1'-0"

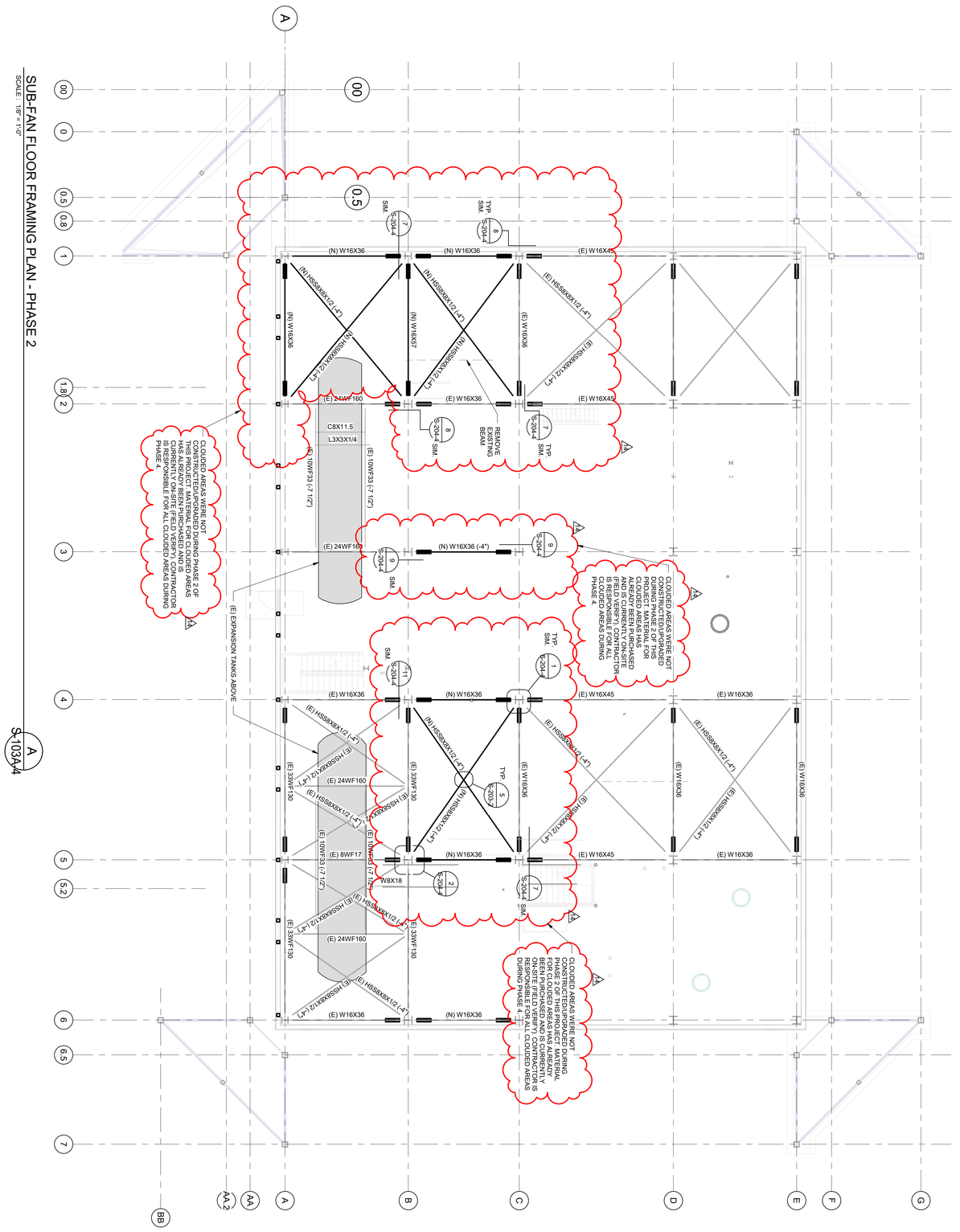
A
00
0
0.5
0.8
1
1.8
2
3
4
5
5.2
6
6.5
7
AA
AA.2
B
C
D
E
F
G
BB
(N) W16X36
(E) W16X45
(E) W16X36
(E) 24WF160
(E) 33WF130
(E) 10WF33 (-7 1/2")
(E) 8WF17
C8X11.5
L3X3X1/4
W8X18
(N) HSS8X8X1/2 (-4")
(E) HSS8X8X1/2 (-4")
(N) W16X36
(N) W16X57
(E) W16X36
(E) W16X45
(E) W16X36
(N) W16X36 (-4")
(E) W16X36
(N) W16X36
(E) W16X45
(E) W16X36
(E) W16X36
(N) W16X36
(E) W16X45
(E) W16X36
(E) W16X36
(N

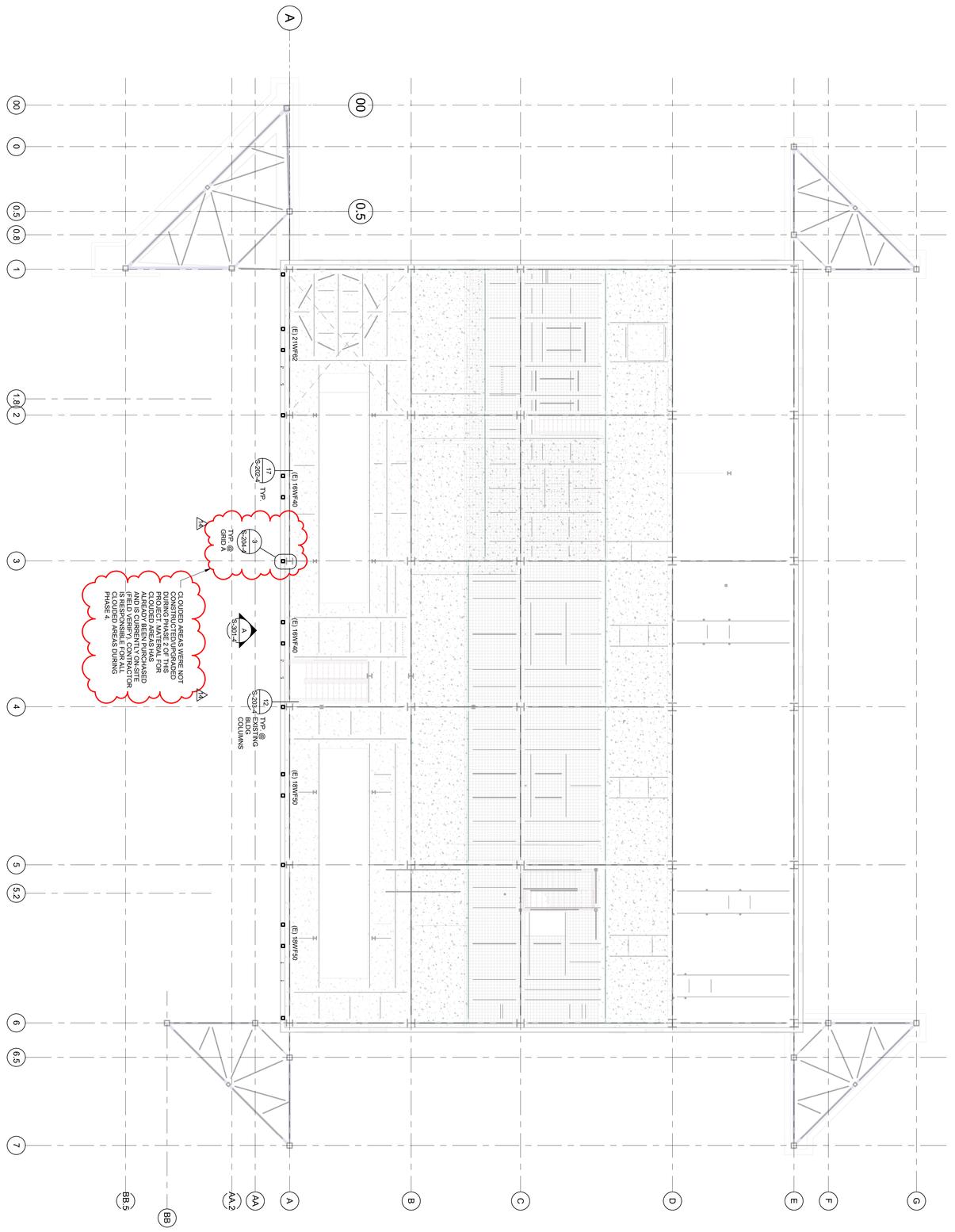

FAN FLOOR FRAMING PLAN - PHASE 4

SCALE: 1/8" = 1'-0"

FAN FLOOR FRAMING UPGRADE NOTES:

1. TOP OF STEEL ELEVATIONS (STEEL BEAMS, DECK, ETC.) - FINISHED FLOOR ELEVATION IS 4772'-0" (FIELD VERIFY)
2. BEAM DESIGNATION EXAMPLE: (E) C8X11.5 (+4") (E) = EXISTING TO REMAIN NEW C8X11.5 = BEAM SIZE (+4") = ELEVATION OF TOP OF BEAM IN RELATION TO TOP OF FINISHED FLOOR - CORRESPONDING FRAMING PLAN LEVEL
3. = EXISTING GRATING
4. = EXISTING SUSPENDED CONCRETE SLAB
5. SEE S-102-4 FOR ADDITIONAL NOTES

NORTH

PROJECT NUMBER 18023

△	DATE	REVISION
14	5/16/22	ADDENDUM #1

FAN FLOOR FRAMING PLAN - PHASE 4

S-103B-4

U OF U BLDG. 303 SEISMIC UPGRADE, PROJ. #22508 -PHASE 4

SALT LAKE CITY UTAH

PERMIT SET - 10-10-2022

50 Years 1969 - 2019 ENGINEERS
structural consultants
1594 W. Park Cir. Ogden, Utah 84404
ph. 801.782.6008 fx. 801.782.4656

FFKR ARCHITECTS
730 Pacific Avenue · Salt Lake City, Utah 84104
O 801.521.6186 · FFKR.COM

ROOF FRAMING PLAN - PHASE 4

SCALE: 1/8" = 1'-0"

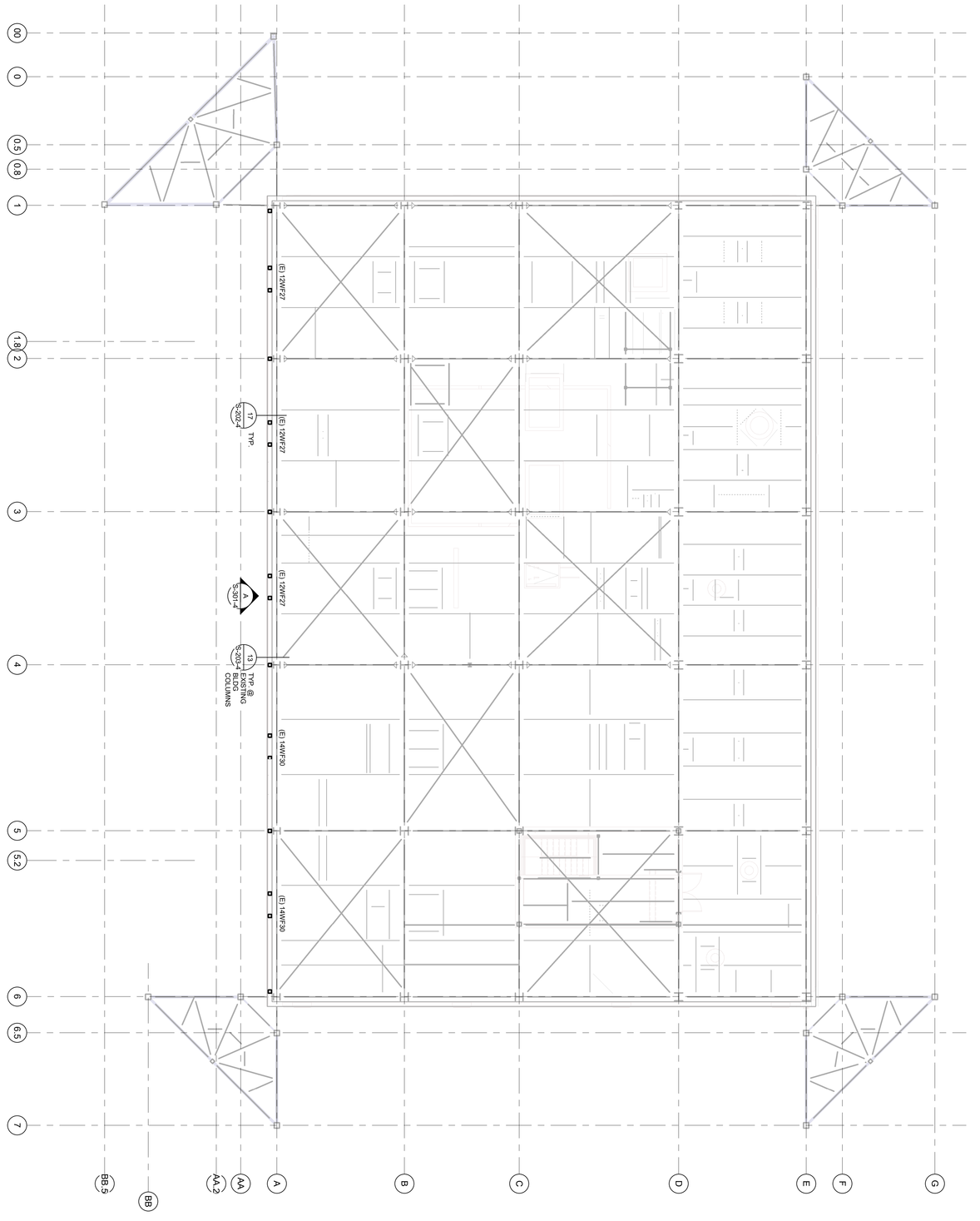

ROOF FRAMING UPGRADE NOTES:

1. TOP OF EXISTING STEEL VARIES - FIELD VERIFY.
2. BEAM DESIGNATION EXAMPLE: (E) C8X11.5 (+4") C8X11.5 = BEAM SIZE (+4") = FIELD VERIFY TOP OF BEAM IN RELATION TO TOP OF EXISTING STEEL OF CORRESPONDING FRAMING PLAN LEVEL

ROOF FRAMING NOTES:

1. SEE SHEET SG-001 FOR GENERAL STRUCTURAL NOTES
2. ROOF DECK SHALL BE WELDED TO SUPPORTING ATTACHMENTS
3. CONTRACTOR SHALL ERECT AND MAINTAIN ADEQUATE TEMPORARY BRACING UNTIL ALL ROOF FRAMING AND DECK ATTACHMENTS ARE COMPLETE
4. SEE TYPICAL CONNECTION DETAILS FOR TYPICAL W BEAM CONNECTIONS THAT ARE NOT SPECIFICALLY DETAILED

U OF U BLDG. 303 SEISMIC UPGRADE, PROJ. #22508 -PHASE 4

SALT LAKE CITY UTAH

PERMIT SET - 10-10-2022

PROJECT NUMBER 18923

ROOF FRAMING PLAN - PHASE 4

S-104-4

△ DATE REVISION

PROFESSIONAL STRUCTURAL ENGINEER STATE OF UTAH Robert M. Moyle 7155810 10/10/22

50 Years 1969 - 2019 ENGINEERS structural consultants
1594 W. Park Cir. Ogden, Utah 84404
ph. 801.782.6008 fx. 801.782.4656

FFKR ARCHITECTS
730 Pacific Avenue · Salt Lake City, Utah 84104
O 801.521.6186 · FFKR.COM

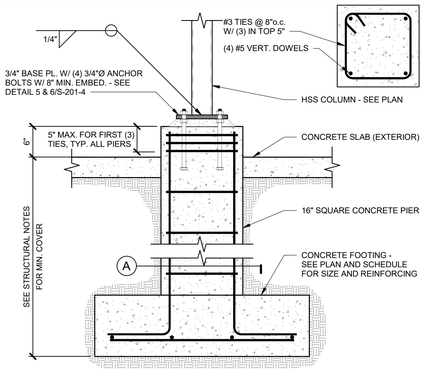

CONCRETE PIER

SCALE : NONE

1 S-201-4

NOTES:
1. fs = LAP SPLICE LENGTH - SEE REBAR LAP SCHEDULE.
2. VERTICAL BARS NOT SHOWN.
3. THIS DETAIL IS APPLICABLE AT ALL FOOTINGS AND FOUNDATION WALLS.

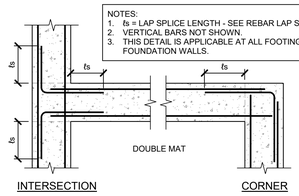

TYP. REINF. @ INTERSECTIONS IN CONC. DETAIL

SCALE : NONE

2 S-201-4

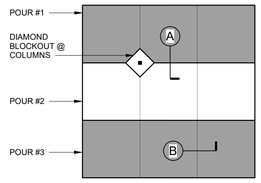

NOTES:
1. JOINTS SHALL OCCUR AT MAIN COLUMN/GRID LINES W/ 10'-0" MAX. SPACING BETWEEN JOINTS @ 4" SLABS; 12'-0" MAX. @ 5" SLABS, & 15'-0" MAX. @ 6" SLABS.
2. SEE PLAN FOR SLAB THICKNESS "T" AND REINFORCING SIZE AND SPACING.

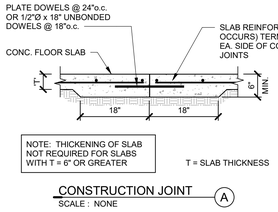

CONSTRUCTION JOINT

SCALE : NONE

A

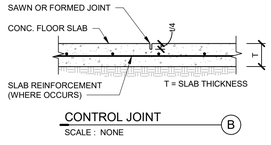

CONTROL JOINT

SCALE : NONE

B

TYPICAL CONCRETE SLAB JOINTS

SCALE : NONE

3 S-201-4

NOTE:
TYPICAL FOUNDATION WALL REINF. NOT SHOWN FOR CLARITY.

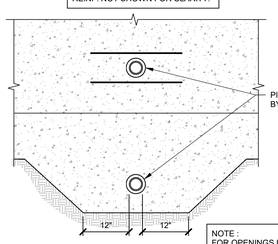

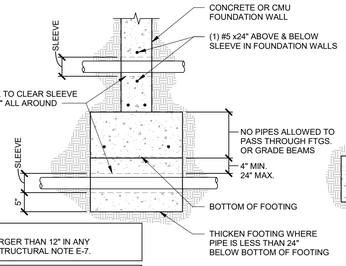

NOTE :
FOR OPENINGS LARGER THAN 12" IN ANY DIRECTION - SEE STRUCTURAL NOTE E-7.

NOTE :
1. DETAIL IS SIMILAR AT MASONRY FOUNDATION WALLS.
2. SEE TYPICAL DETAIL FOR MULTIPLE WALL PENETRATIONS.

PIPE CROSSING FOOTING / FOUNDATION WALL

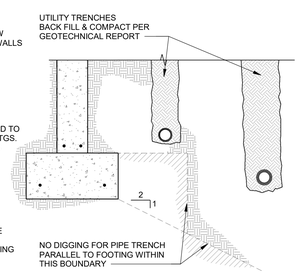

PIPE PARALLEL TO FOOTING

ALLOWABLE PIPING LOCATIONS @ FOOTING DETAIL

SCALE : NONE

4 S-201-4

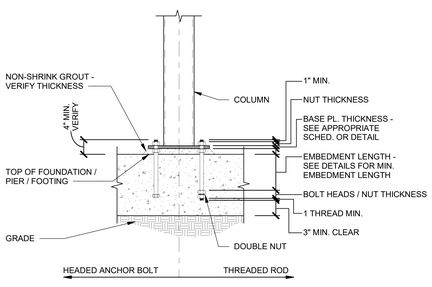

TYPICAL ANCHOR BOLT EMBEDMENT DETAIL

SCALE : NONE

5 S-201-4

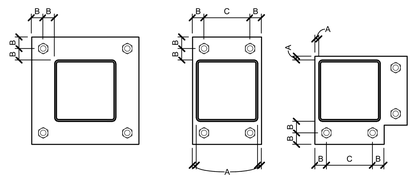

A = 1/2" MIN.
B = 1 1/2"
C = 3" MIN.

TYPICAL BASE PLATE

SCALE : NONE

6 S-201-4

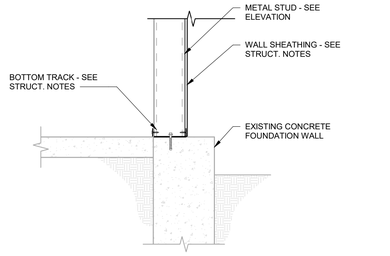

DETAIL

SCALE : NONE

7 S-201-4

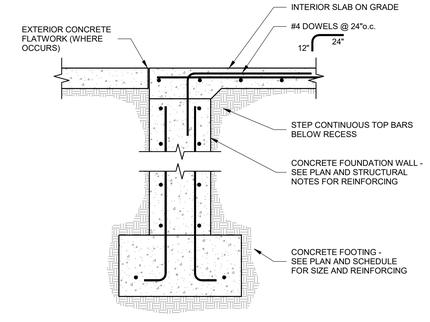

CONCRETE FOUNDATION @ OPENING

SCALE : NONE

8 S-201-4

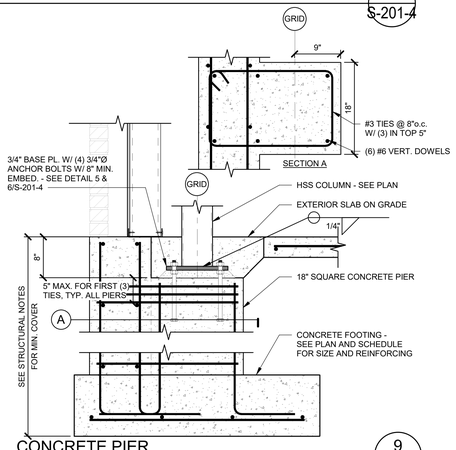

CONCRETE PIER

SCALE : NONE

9 S-201-4

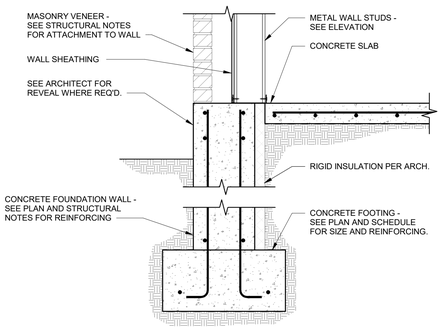

SECTION @ EXTERIOR WALL

SCALE : NONE

11 S-201-4

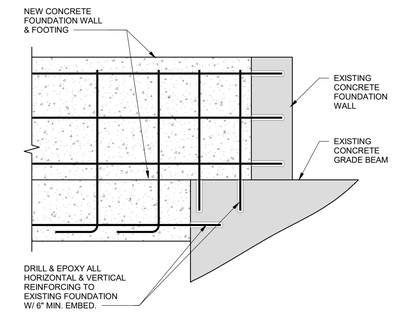

DETAIL

SCALE : NONE

12 S-201-4

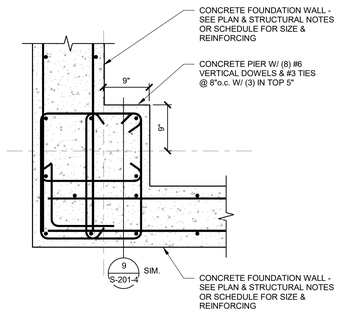

DETAIL

SCALE : NONE

14 S-201-4

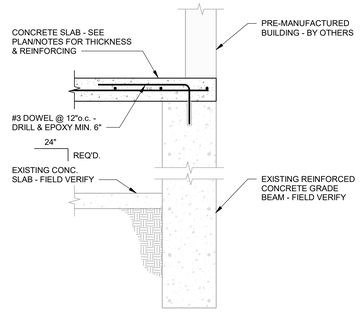

DETAIL

SCALE : NONE

15 S-201-4

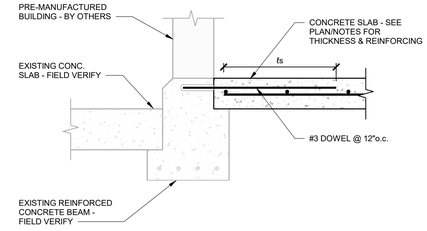

DETAIL

SCALE : NONE

16 S-201-4

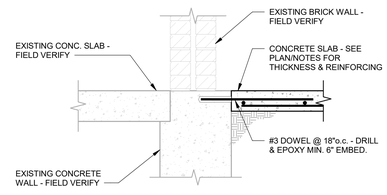

DETAIL

SCALE : NONE

17 S-201-4

FFKR ARCHITECTS
730 Pacific Avenue · Salt Lake City, Utah 84104
O 801.521.6186 · FFKR.COM

50 YEARS 1969 2019 ENGINEERS
structural consultants
1984 W. Park Cir. Ogden, Utah 84404
ph: 801.782.6008 fx: 801.782.4656

U OF U BLDG. 303 SEISMIC UPGRADE, PROJ. #22508 -PHASE 4

SALT LAKE CITY UTAH

PERMIT SET - 10-10-2022

PROFESSIONAL STRUCTURAL ENGINEER
10/10/22
No. 276196
Robert M. Moyle
STATE OF UTAH

△ DATE REVISION

PROJECT NUMBER 18923

PHASE 4 DETAILS

S-201-4

10/10/2022 2:21:30 PM

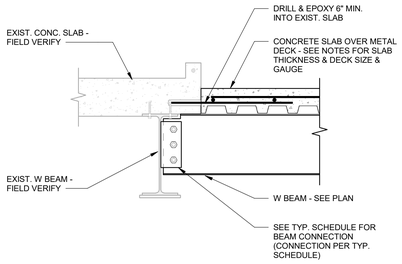

SEE DETAIL 3/S-202-4 FOR EXISTING BRICK WALL AND STUD WALL LOCATIONS (WHERE OCCURS BELOW).

DETAIL 1 S-202-4 L
SCALE : NONE

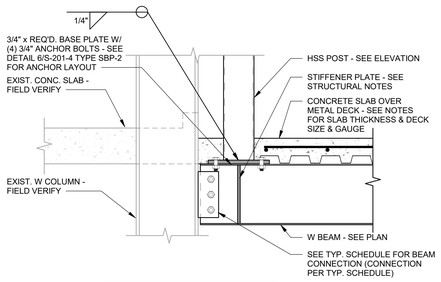

SEE DETAIL 3/S-202-4 FOR EXISTING BRICK WALL AND STUD WALL LOCATIONS (WHERE OCCURS BELOW).

DETAIL 2 S-202-4 L
SCALE : NONE

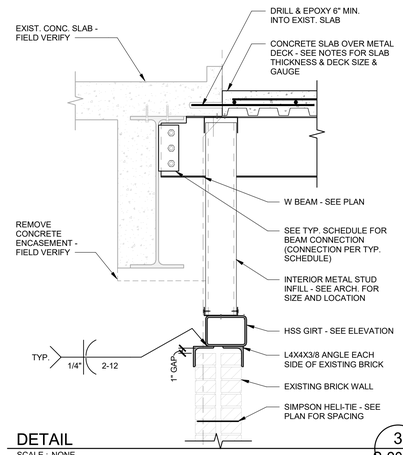

DETAIL 3 S-202-4 L
SCALE : NONE

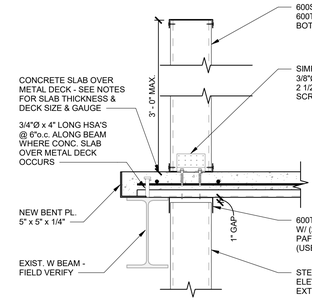

AT SIM. CONDITION WALL BELOW, ROOF SLAB DOES NOT OCCUR.

DETAIL 4 S-202-4 L
SCALE : NONE

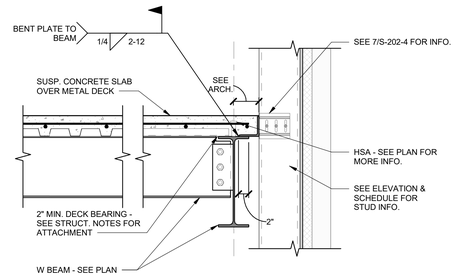

DETAIL 5 S-202-4 L
SCALE : NONE

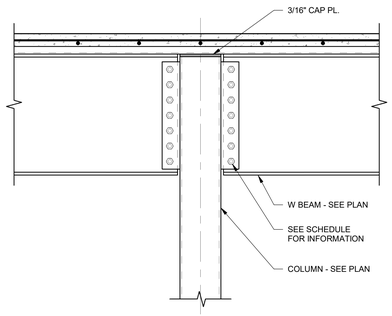

DETAIL 6 S-202-4
SCALE : NONE

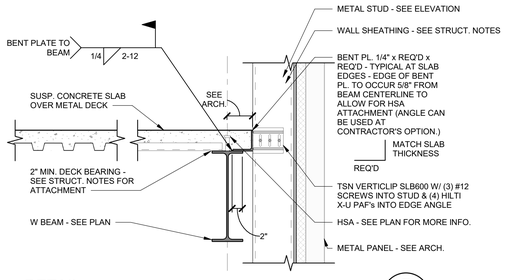

DETAIL 7 S-202-4 L
SCALE : NONE

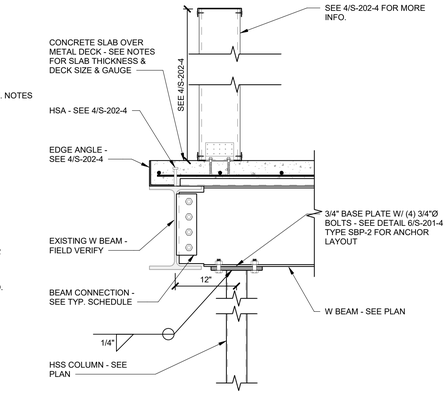

DETAIL 8 S-202-4
SCALE : NONE

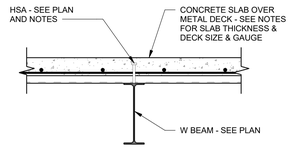

DETAIL 9 S-202-4
SCALE : NONE

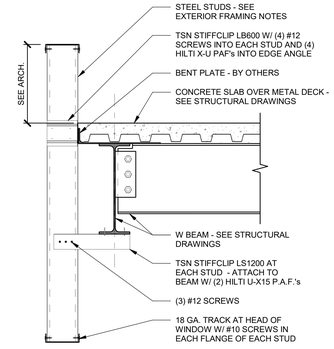

TYPICAL RIBBON WINDOW DETAIL 10 S-202-4
SCALE : NONE

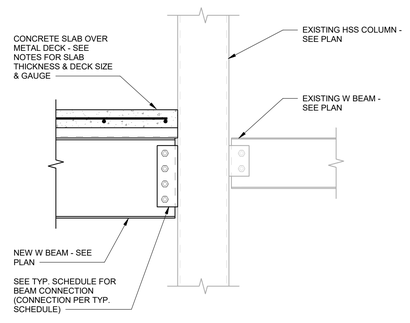

DETAIL 12 S-202-4
SCALE : NONE

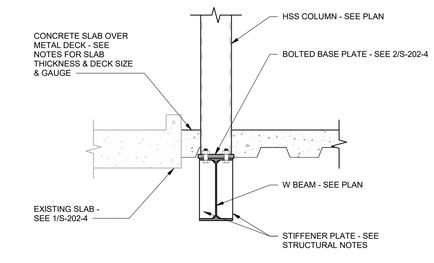

DETAIL 13 S-202-4
SCALE : NONE

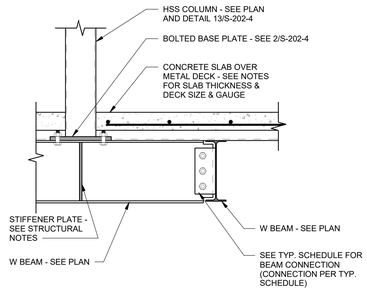

DETAIL 14 S-202-4
SCALE : NONE

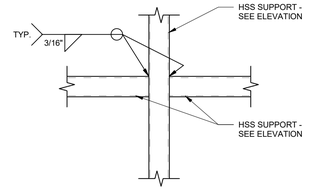

DETAIL 15 S-202-4
SCALE : NONE

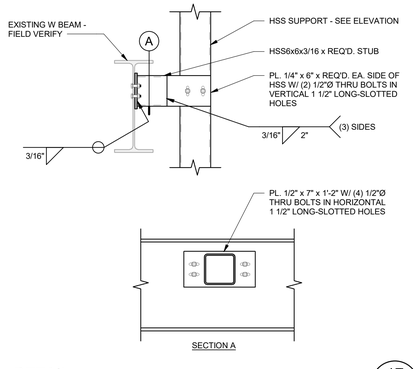

DETAIL 17 S-202-4
SCALE : NONE

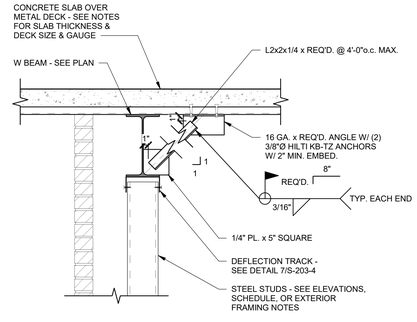

DETAIL 19 S-202-4
SCALE : NONE

FFKR ARCHITECTS
730 Pacific Avenue · Salt Lake City, Utah 84104
O 801.521.6186 · FFKR.COM

50 YEARS 1969 2019 ENGINEERS
structural consultants
1394 W. Park Cir. Ogden, Utah 84404
ph. 801.782.6008 fx. 801.782.4656

U OF U BLDG. 303 SEISMIC UPGRADE, PROJ. #22508 -PHASE 4
SALT LAKE CITY UTAH

PERMIT SET - 10-10-2022

PROFESSIONAL STRUCTURAL ENGINEER
10/10/22
No. 276196
Robert M. Moyle
STATE OF UTAH

△ DATE REVISION

PROJECT NUMBER 18923

PHASE 4 DETAILS

S-202-4

10/10/2022 2:21:32 PM

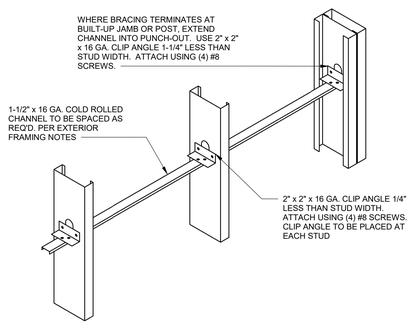

TYP. LATERAL BRACING / BRIDGING
SCALE : NONE
1 S-203-4

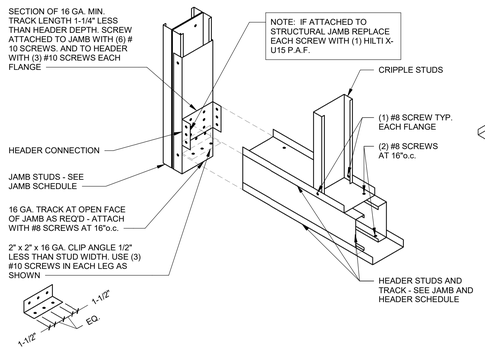

TYP. BOX HEADER CONNECTION
SCALE : NONE
2 S-203-4

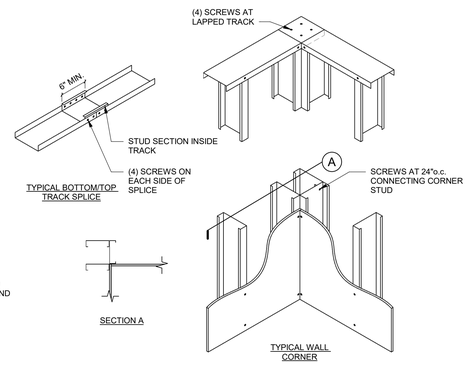

DETAIL
SCALE : NONE
3 S-203-4

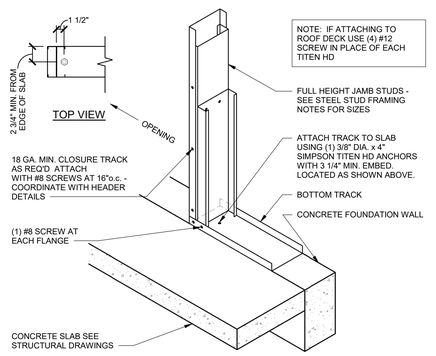

DOOR JAMB ANCHORAGE
SCALE : NONE
4 S-203-4

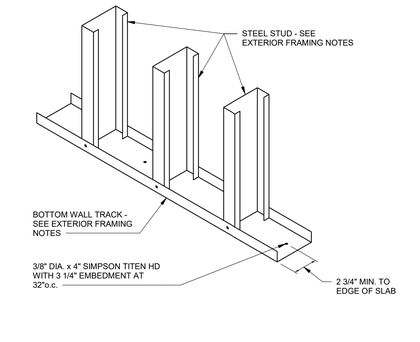

DETAIL
SCALE : NONE
5 S-203-4

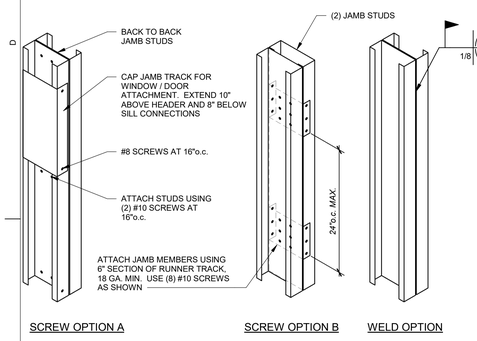

TYPICAL BUILT-UP STUDS STITCHING DETAIL
SCALE : NONE
6 S-203-4

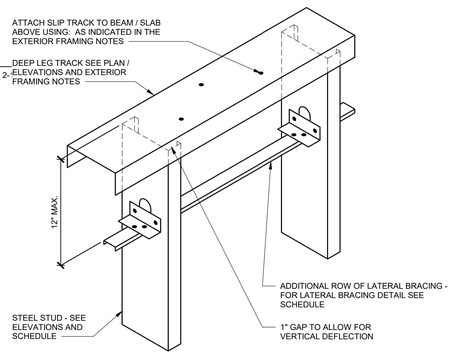

TYPICAL DEFLECTION TRACK
SCALE : NONE
7 S-203-4

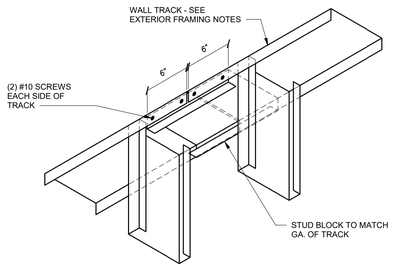

TYP. TRACK SPLICE DETAIL
SCALE : NONE
8 S-203-4

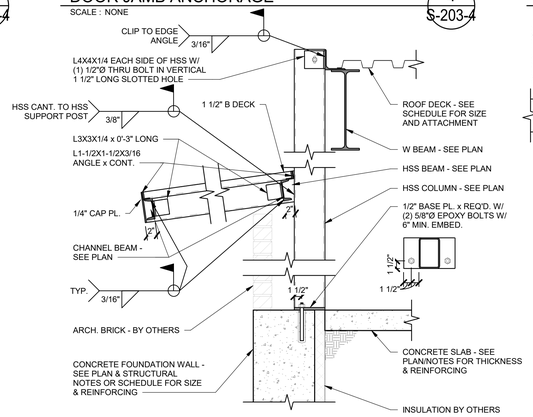

DETAIL
SCALE : NONE
9 S-203-4

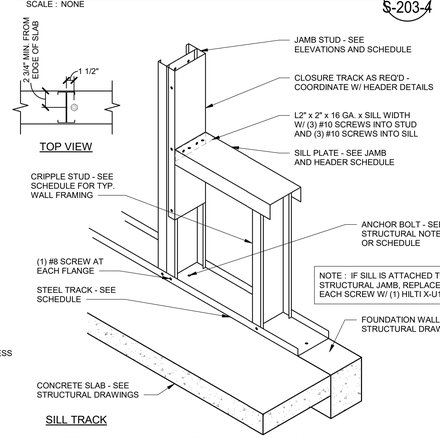

SILL TRACK CONNECTION @ WINDOW OPENINGS
SCALE : NONE
10 S-203-4

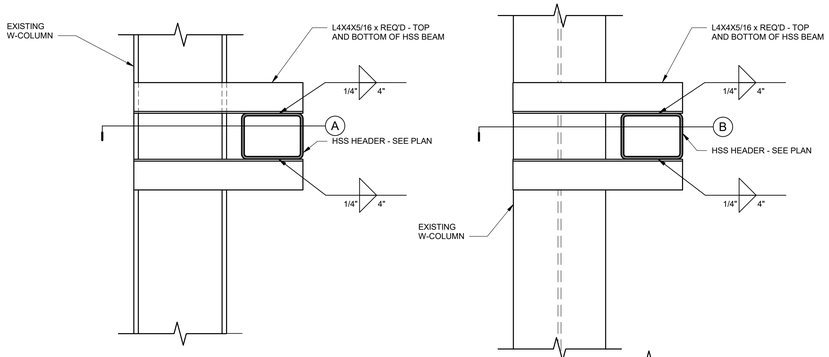

DETAIL
SCALE : NONE
11 S-203-4

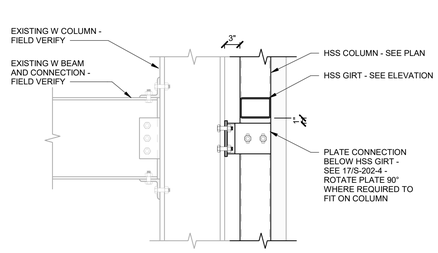

DETAIL
SCALE : NONE
12 S-203-4

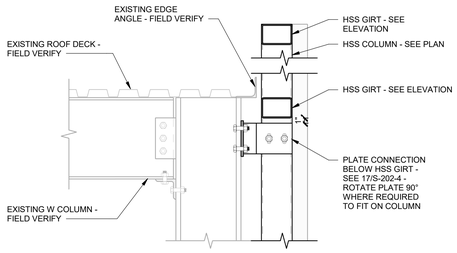

DETAIL
SCALE : NONE
13 S-203-4

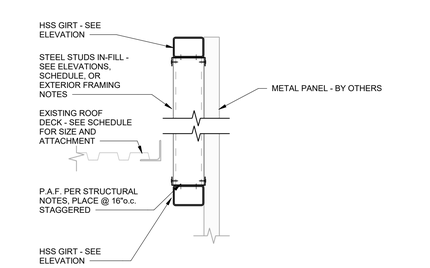

DETAIL
SCALE : NONE
14 S-203-4

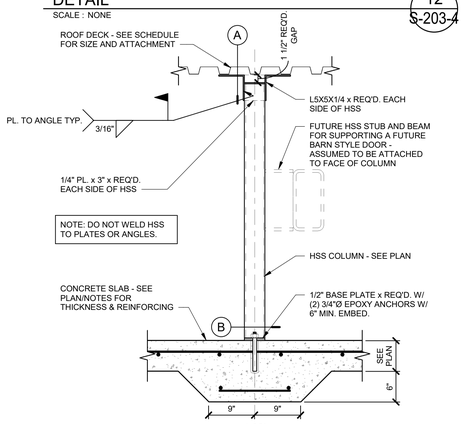

DETAIL
SCALE : NONE
15 S-203-4

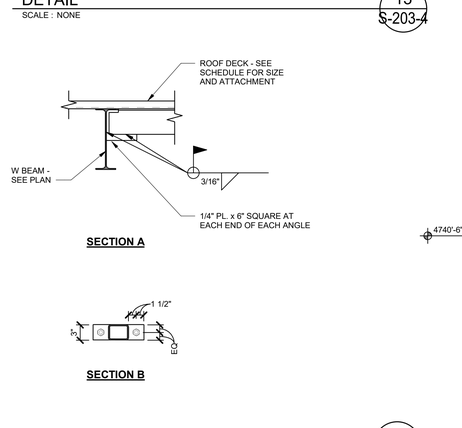

DETAIL
SCALE : NONE
16 S-203-4

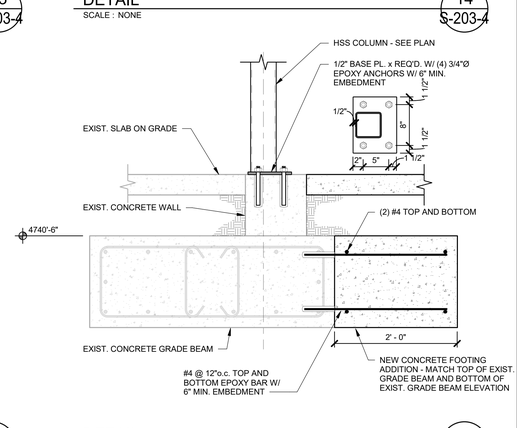

FFKR ARCHITECTS
730 Pacific Avenue · Salt Lake City, Utah 84104
O 801.521.6186 · FFKR.COM
50 YEARS 1965 2015 ENGINEERS
structural consultants
1394 W. Park Cir. Ogden, Utah 84404
ph: 801.782.6008 fx: 801.782.4656

U OF U BLDG. 303 SEISMIC UPGRADE, PROJ. #22508 -PHASE 4
SALT LAKE CITY UTAH
PERMIT SET - 10-10-2022

PROFESSIONAL STRUCTURAL ENGINEER
10/10/22
No. 276196
Robert M. Moyle
STATE OF UTAH

△ DATE REVISION

PROJECT NUMBER 18923

PHASE 4 DETAILS

S-203-4

10/10/2022 2:21:36 PM

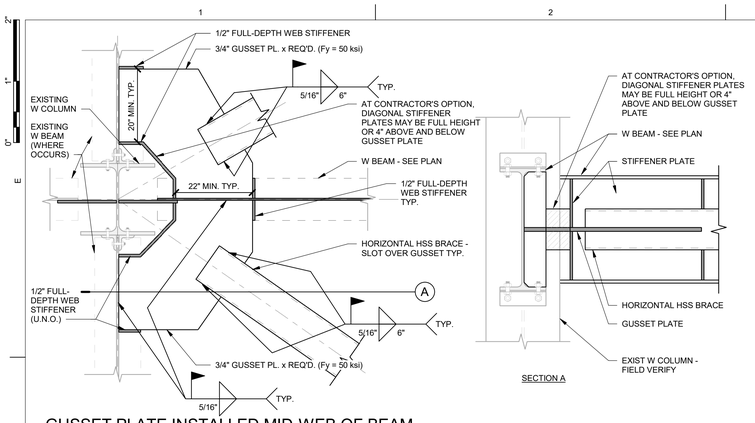

GUSSET PLATE INSTALLED MID-WEB OF BEAM

SCALE : NONE

1 S-204-4

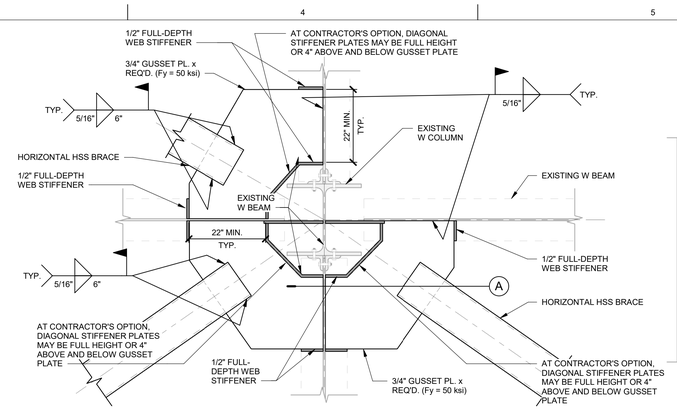

GUSSET PLATE INSTALLED MID-HEIGHT OF HSS

SCALE : NONE

2 S-204-4

FLOOR	GRID	'T'	WELD	
			'A'	'B'
PIPING	1, 6	1/2"	5/16"	16"
PIPING	E	1/4"	1/4"	8"
FAN	1, 6, A, B, C	1/2"	5/16"	16"
FAN	E	1/4"	1/4"	8"

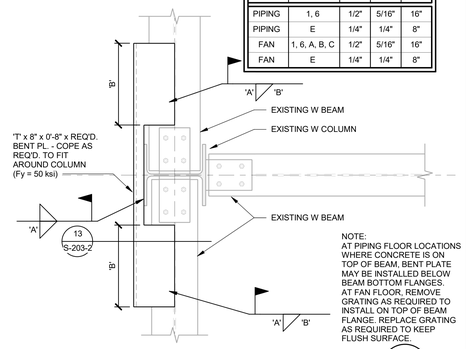

DRAG CONNECTION DETAIL

SCALE : NONE

3 S-204-4

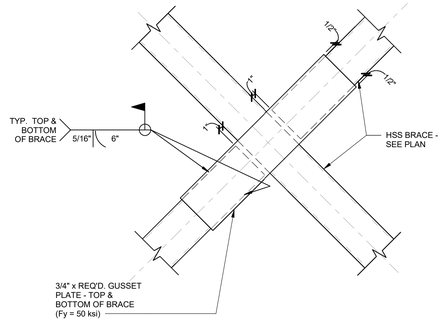

DETAIL

SCALE : NONE

5 S-204-4

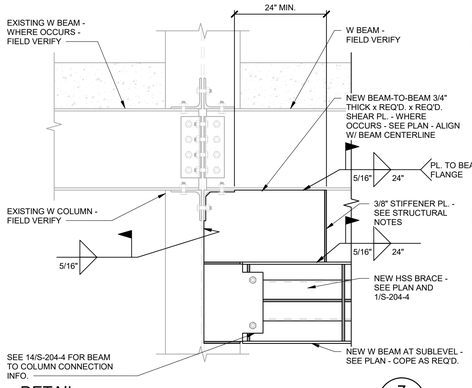

DETAIL

SCALE : NONE

7 S-204-4

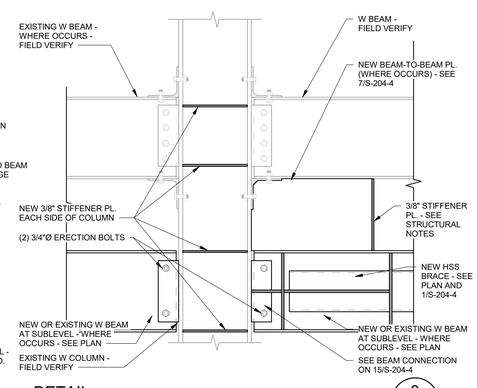

DETAIL

SCALE : NONE

8 S-204-4

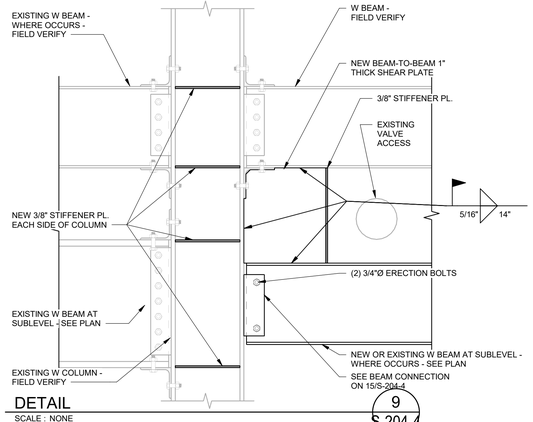

DETAIL

SCALE : NONE

9 S-204-4

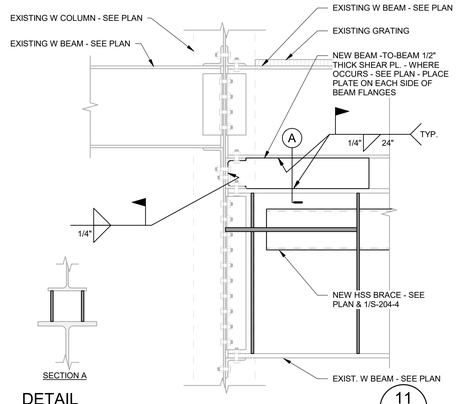

DETAIL

SCALE : NONE

11 S-204-4

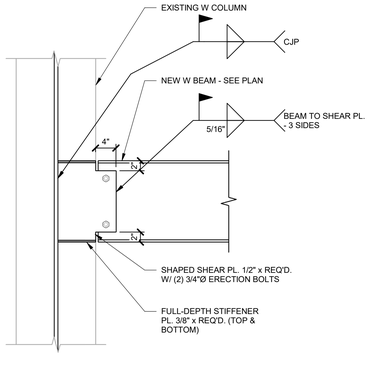

DETAIL

SCALE : NONE

14 S-204-4

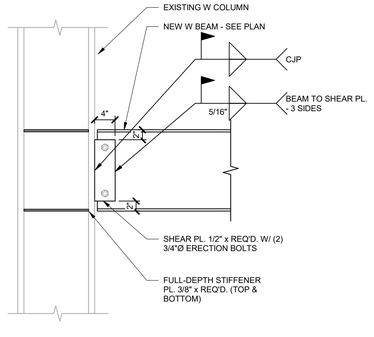

DETAIL

SCALE : NONE

15 S-204-4

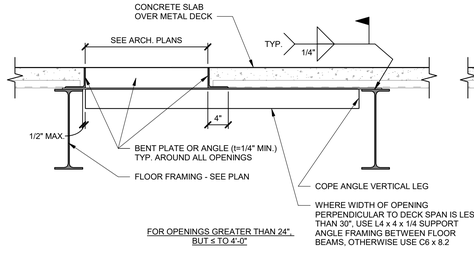

FOR OPENINGS GREATER THAN 24", BUT ≤ TO 4'-0"

"L"	CHANNEL
L ≤ 6'-0"	C6 x 8.2
L ≤ 10'-0"	C8 x 11.5

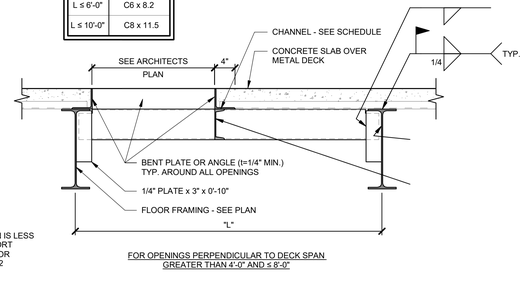

FOR OPENINGS PERPENDICULAR TO DECK SPAN GREATER THAN 4'-0" AND ≤ 8'-0"

FLOOR OPENING DETAIL

SCALE : NONE

16 S-204-4

CLOUDED AREAS WERE NOT CONSTRUCTED/UPGRADED DURING PHASE 2 OF THIS PROJECT. MATERIAL FOR CLOUDED AREAS HAS ALREADY BEEN PURCHASED AND IS CURRENTLY ON-SITE (FIELD VERIFY). CONTRACTOR IS RESPONSIBLE FOR ALL CLOUDED AREAS DURING PHASE 4.

PHASE 4 DETAILS

S-204-4

FFKR ARCHITECTS
730 Pacific Avenue · Salt Lake City, Utah 84104
O 801.521.6186 · FFKR.COM
50 YEARS 1965 2015
ENGINEERS
structural consultants
1384 W. Park Cir. Ogden, Utah 84404
ph: 801.782.6008 fx: 801.782.4656

U OF U BLDG. 303 SEISMIC UPGRADE, PROJ. #22508 -PHASE 4

SALT LAKE CITY UTAH

PERMIT SET - 10-10-2022

PROFESSIONAL STRUCTURAL ENGINEER — 10/10/22 — No. 276196 — Robert M. Moyle — STATE OF UTAH

△	DATE	REVISION
1	5/18/20	REVIEW COMMENTS #1
2	1/5/21	ADDENDUM 3
14	5/16/22	ADDENDUM #1

PROJECT NUMBER 18923

10/10/2022 2:21:38 PM

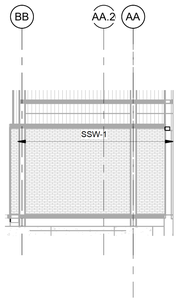

SOUTH WALL ELEVATION - GRID 6

SCALE : 1/8" = 1'-0"

D
S-301-4

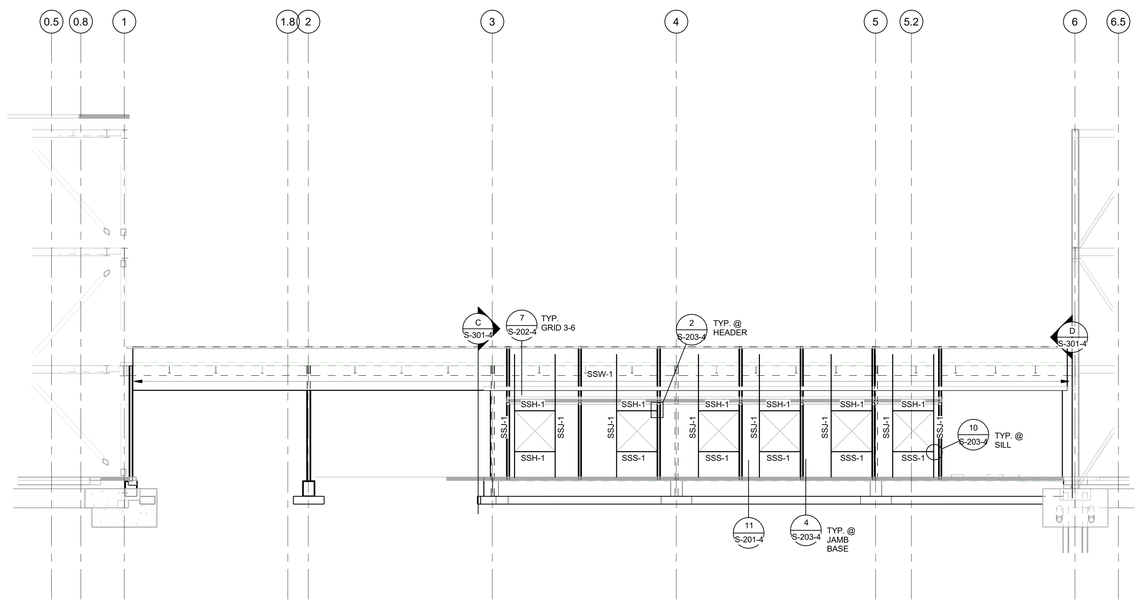

WEST WALL ELEVATION - GRID BB

SCALE : 1/8" = 1'-0"

B
S-301-4

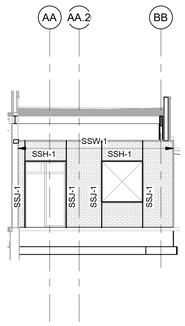

NORTH WALL ELEVATION - GRID 1

SCALE : 1/8" = 1'-0"

C
S-301-4

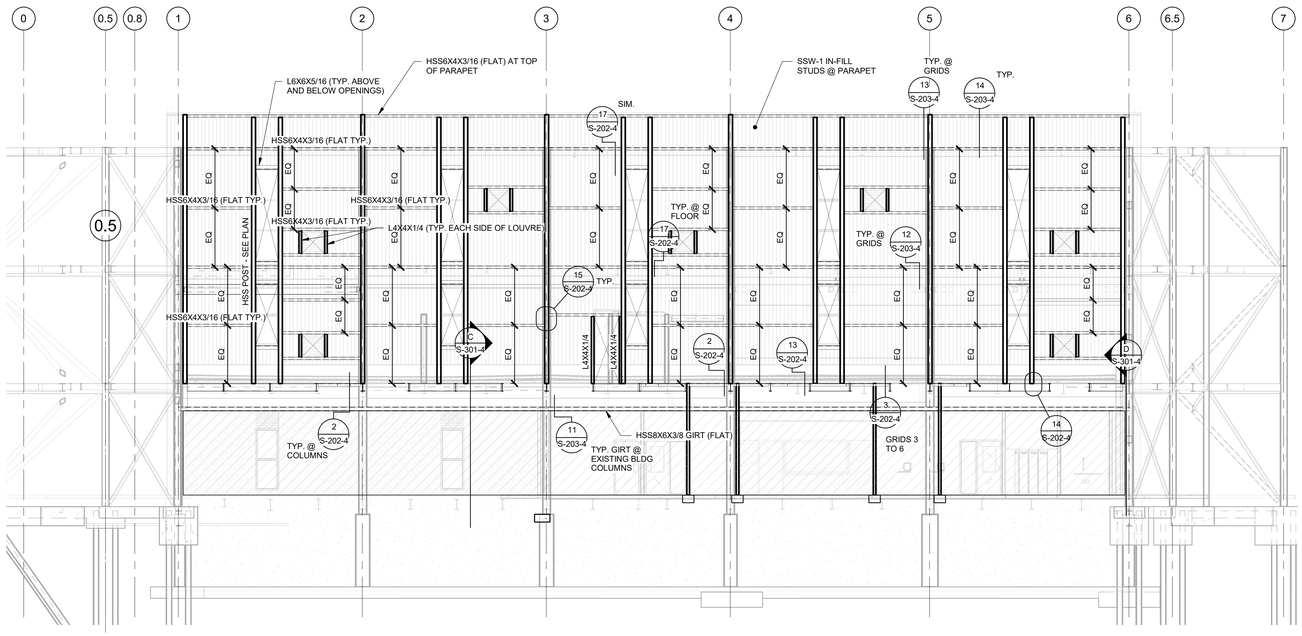

WEST WALL ELEVATION - GRID A

SCALE : 1/8" = 1'-0"

A
S-301-4

FFKR ARCHITECTS
730 Pacific Avenue · Salt Lake City, Utah 84104
O 801.521.6186 · FFKR.COM

50 Years 1969 2019
ENGINEERS
structural consultants
1384 W. Park Cir. Ogden, Utah 84404
ph. 801.782.6008 fx. 801.782.4656

U OF U BLDG. 303 SEISMIC UPGRADE, PROJ. #22508 -PHASE 4

SALT LAKE CITY UTAH

PERMIT SET - 10-10-2022

PROFESSIONAL STRUCTURAL ENGINEER
10/10/22
No. 276196
Robert M. Moyle
STATE OF UTAH

△ DATE REVISION

PROJECT NUMBER 18923

WALL
ELEVATIONS

S-301-4

10/10/2022 2:21:42 PM

MECHANICAL LEGEND (NOTE: NOT ALL SYMBOLS SHOWN ARE USED ON THESE DRAWINGS)

ABBR.	SYMBOL	DESCRIPTION
		- PIPING -
SA		POSITIVE PRESSURE DUCT UP
SA		POSITIVE PRESSURE DUCT DOWN
EA/RA		NEGATIVE PRESSURE DUCT UP
EA/RA		NEGATIVE PRESSURE DUCT DOWN
OA		OUTSIDE AIR INTAKE DUCT UP
OA		OUTSIDE AIR INTAKE DUCT DOWN
		ROUND DUCT UP
		ROUND DUCT DOWN
		CONICAL FITTING WITH DAMPER
		ECCENTRIC FITTING WITH DAMPER
		CONICAL FITTING WITHOUT DAMPER
		ECCENTRIC FITTING WITHOUT DAMPER
		ELBOW WITH TURNING VANES
		ELBOW WITHOUT TURNING VANES
		LONG RADIUS ELBOW
		SHORT RADIUS ELBOW
		DUCTWORK
MVD		MANUAL VOLUME DAMPER
		ACCESS PANEL (SIZE)
		PUMP
		DUCT BREAK

ABBR.	SYMBOL	DESCRIPTION
	M	METER
	M	2-WAY MOTOR CONTROL VALVE
	M	3-WAY MOTOR CONTROL VALVE
		BALANCE VALVE
		FLOW MEASURING STATION
		BALL VALVE
		BUTTERFLY VALVE
		CHECK VALVE
		GATE VALVE
		GLOBE VALVE
		PRESSURE REDUCING VALVE
		PRESSURE RELIEF VALVE
		HOSE END DRAIN VALVE
		STRAINER
	BOX	STRAINER WITH BLOW OFF VALVE
		PLUG VALVE
		GAS COCK
	S	SOLENOID VALVE
PRV		PRESSURE REGULATING VALVE
		THERMOWELL
		THERMOMETER WITH THERMOWELL
		UNION
	DE	DIELECTRIC COUPLING
		ORIFICE PLATE
		VENTURI
		AUTOMATIC AIR VENT
		MANUAL AIR VENT
		VACUUM BREAKER
		THERMOMETER
		GAUGE
		GAUGE WITH BALL VALVE
		DIFFERENTIAL PRESSURE GAUGE
		PRESSURE TEMPERATURE/TEST POINT

ABBR.	SYMBOL	DESCRIPTION
HTHWS	HTHWS	HIGH TEMP. HOT WATER SUPPLY
HTHWR	HTHWR	HIGH TEMP. HOT WATER RETURN
CWS	CWS	COOLING WATER SUPPLY
CWR	CWR	COOLING WATER RETURN
CHWS	CHWS	CHILLED WATER SUPPLY
CHWR	CHWR	CHILLED WATER RETURN
CDS	CDS	CONDENSER WATER SUPPLY (TOWER)
CDR	CDR	CONDENSER WATER RETURN (TOWER)
CDS	CDS	CONDENSER WATER SUPPLY
CDR	CDR	CONDENSER WATER RETURN
CA	CA	COMPRESSED AIR
IA	IA	INSTRUMENT AIR
PC	PC	PUMPED CONDENSATE
D	D	CONDENSATE OR EQUIPMENT DRAIN
BD	BD	BLOW-DOWN DRAIN
OF	OF	OVERFLOW DRAIN
DCW		DOMESTIC COLD WATER
SW		SOFTENED WATER
NPW		NON-POTABLE WATER
DHW		DOMESTIC HOT WATER
DHWC		DOMESTIC HOT WATER CIRCULATING
DWT	T	DOMESTIC TEMPERED WATER
V	V	DOMESTIC VENT PIPING
W	W	SANITARY WASTE (ABOVE FLOOR)
W	W	SANITARY WASTE (BELOW FLOOR)
OST	OST	STORM OVERFLOW DRAIN
ST	ST	STORM DRAIN (ABOVE FLOOR)
ST	ST	STORM DRAIN (BELOW FLOOR)
SS	SS	SANITARY SEWER (BELOW FLOOR)
G	G	NATURAL GAS
LO	LO	LUBE OIL
		ORIFICE PLATE
		PIPE ANCHOR
		PIPE GUIDE
		FLEX CONNECTION
		PIPE CAP
		PIPE BREAK
		FLOW ARROW
		PIPE DOWN
		PIPE UP
		TEE OUTLET UP
		TEE OUTLET DOWN

ABBR.	SYMBOL	DESCRIPTION
	ZONE # T	THERMOSTAT W/ZONE CALLOUT
	ZONE # HS	HUMIDITY SENSOR W/ZONE CALLOUT
	ZONE # TS	TEMP SENSOR W/ZONE CALLOUT
	CO	CARBON MONOXIDE DETECTOR
	CO_2	CARBON DIOXIDE SENSOR
		DIGITAL INPUT
		ANALOG INPUT
		DIGITAL OUTPUT
		ANALOG OUTPUT
		BI-DIRECTIONAL NETWORK CONNECTION
		FLOW ARROW
	FS	FLOW SWITCH
	TS	DUCT MOUNTED TEMPERATURE SENSOR
	TS	DUCT AVERAGING TEMPERATURE SENSOR
	TS	WELL MOUNTED TEMPERATURE SENSOR
	MD	MOTORIZED DAMPER ACTUATOR
	M	MOTORIZED DAMPER ACTUATOR
	TL	TEMPERATURE LOW LIMIT THERMOSTAT
	SD	DUCT SMOKE DETECTOR
	ES	DAMPER/VALVE END SWITCH
	DPS	DIFFERENTIAL PRESSURE SWITCH
	HPS	HIGH PRESSURE SWITCH
	PS	PRESSURE SWITCH MANUAL RESET
		AQUASTAT
	PE	PRESSURE ELECTRIC SWITCH
	MS	MOTOR STARTER
	CR	CONTROL RELAY
	VFD	VARIABLE FREQUENCY DRIVE
	VFD S P	VARIABLE FREQUENCY DRIVE WITH BY-PASS
	M	ELECTRIC MOTOR
	TC	TEMPERATURE CONTROLLER
	TT	TEMPERATURE TRANSMITTER
	LT	LEVEL TRANSMITTER
	PT	PRESSURE TRANSMITTER
	DPT	DIFFERENTIAL PRESSURE TRANSMITTER
	FT	FLOW TRANSMITTER
	EPT	ELECTRIC/PNEUMATIC TRANSDUCER
	P/I	ELECTRIC/PNEUMATIC TRANSDUCER
		CURRENT SWITCH/TRANSMITTER
	ANN	ANNUNCIATOR
	FACP	FIRE ALARM CONTROL PANEL
	CAM	CONTROL ADDRESSABLE MODULE
	MAM	MONITOR ADDRESSABLE MODULE
	ESR	EMERGENCY STOP RELAY
	LC	LEVEL CONTROLLER
	EPO	EMERGENCY POWER SHUTOFF
	AFS	AIR FLOW SWITCH

ABBR.	SYMBOL	DESCRIPTION
RD		ROOF DRAIN
OD		OVERFLOW DRAIN
FS		FLOOR SINK
FD		FLOOR DRAIN
FCO		FLOOR CLEANOUT
GCO		GRADE CLEANOUT
WCO		WALL CLEANOUT
HB		HOSE BIBB
SA		SHOCK ABSORBERS

- GRAPHIC SYMBOLS -

1	KEY NOTE
#	REVISION NUMBER
TAG	MECHANICAL EQUIPMENT TAG
	SHADING INDICATES MECHANICAL EQUIPMENT
	HATCHING OR HEAVY SHORT DASH INDICATE ITEMS TO BE REMOVED
N	NORTH ARROW
	CONNECT TO EXISTING
EXIST NEW	CONNECT TO EXISTING PIPE
	SPOT ELEVATION

DETAIL BUBBLE
1 / M2.1 — DETAIL NUMBER; SHEET NUMBER - WHERE DETAIL IS SHOWN

SECTION CUT
1 / XXX — SECTION LETTER; SHEET NUMBER

- ABBREVIATIONS -

AFF	ABOVE FINISHED FLOOR	IE	INVERT ELEVATION
BDD	BACK DRAFT DAMPER	LAT	LEAVING AIR TEMPERATURE
BFF	BELOW FINISHED FLOOR	LWT	LEAVING WATER TEMPERATURE
CL	CENTERLINE	MA	MIXED AIR
CO	CLEANOUT	(N)	NEW
(E)	EXISTING	NC	NORMALLY CLOSED
EA	EXHAUST AIR	NO	NORMALLY OPEN
EAT	ENTERING AIR TEMPERATURE	OA	OUTSIDE AIR
ELEV	ELEVATION	OTCS	OPEN TO CEILING SPACE
ESP	EXTERNAL STATIC PRESSURE	RA	RETURN AIR
EWT	ENTERING WATER TEMPERATURE	SA	SUPPLY AIR
FFE	FINISHED FLOOR ELEVATION	TSP	TOTAL STATIC PRESSURE
FGR	FLUE GAS RECIRCULATION	VTR	VENT THROUGH ROOF

GENERAL NOTES:

CONTRACTOR SHALL REFERENCE SPECIFICATIONS FOR CONSTRUCTION MATERIALS AND INSTALLATION PROCEDURES. SPECIFICATIONS ARE A PART OF THE CONSTRUCTION DOCUMENTS. SHOULD ANY CONFLICT ARISE BETWEEN THE DRAWINGS AND SPECIFICATIONS, SUCH CONFLICT SHALL BE BROUGHT TO THE ATTENTION OF THE ARCHITECT/ENGINEER FOR RESOLUTION.

ALL PENETRATIONS THROUGH FIRE-RATED WALLS OR FLOORS ARE TO BE SEALED TO MAINTAIN SEPARATION RATING.

THESE DRAWINGS ARE DIAGRAMMATIC IN CHARACTER AND DO NOT NECESSARILY INDICATE EVERY REQUIRED OFFSET, FITTING, ETC.

ALL DUCTWORK DIMENSIONS SHOWN ARE INTERIOR CLEAR DIMENSIONS. ALLOWANCES FOR DUCT LINER OR INSULATION ARE NOT INCLUDED

EXISTING CONDITIONS ARE TAKEN FROM EXISTING DRAWINGS AND FIELD OBSERVATION. ACTUAL CONDITIONS MAY VARY FROM WHAT IS SHOWN. FIELD VERIFY ALL CONDITIONS PRIOR TO COMMENCING WORK.

COPYRIGHT, THE RMH GROUP, INC 2018

FFKR ARCHITECTS
730 Pacific Avenue · Salt Lake City, Utah 84104
O 801.521.6186 · FFKR.COM

RMH GROUP
engineering a greener future
MECHANICAL · ELECTRICAL
INDUSTRIAL · SUSTAINABLE DESIGN
12600 West Colfax Avenue
Lakewood, Colorado 80215
Phone 303.239.0909
Fax 303.239.0918
www.rmhgroup.com
RMH Group project number 18977

© 2021

U OF U BLDG. 303 SEISMIC UPGRADE, PROJ. #22436 - PHASE 4

SALT LAKE CITY UTAH

CONSTRUCTION SET - 10-10-2022

JEFFREY W. ELSNER — STATE OF UTAH — NO. 9799596-2202 — PROFESSIONAL ENGINEER
10/10/2022
Digitally signed by Jeff Elsner
Date: 2022.10.10 08:58:37

	DATE	REVISION
0	10/10/2022	CONSTRUCTION SET

PROJECT NUMBER 18136

MECHANICAL LEGEND

M-000-4

10/7/2022 5:21:04 PM

AIR HANDLING UNIT SCHEDULE

TAG	SERVICE	SPECIFICATION REFERENCE	MIN. OSA CFM	FAN SECTIONS: SYSTEM	TOTAL CFM	MIN CFM	TSP IN. W.G.	ESP IN. W.G.	RPM	MAX BHP	MOTOR HP	DRIVE	TYPE	SPEED CONTROL
AHU-2	PLANT OFFICES	23 81 46	375	SUPPLY	2700	730	2.29	1.50	1760.00	1.74	2.00	DIRECT	PLENUM	EC/PM MOTOR
				RELIEF	2450	0	1.07	0.50	1440.00	1.15	2.00	DIRECT	PLENUM	EC/PM MOTOR

TAG	HEAT PUMP COOLING: AREA SQ. FT	TOTAL MBH	SENS. MBH	EDB °F	EWB °F	LDB °F	LWB °F	ROWS	APD IN. WC.	CONDENSER EWT °F	EER	HEAT PUMP HEATING: CFM	MBH	EDB °F	LDB °F	EVAPORATOR EWT °F	COP
AHU-2	39.34	75.68	69.62	80.36	61.74	53.99	51.63	3	0.18	65	13.2	1220	67.20	45.6	102.3	45	3.41

TAG	HEAT PUMP WATER SIDE: GPM	EWT °F	LWT °F	FILTERS: POSITION	MERV A	CLEAN APD	DIRTY APD	ELECTRICAL: V	PH	FLA	MCA	OPD	PHYSICAL: LxWxH INCHES	WEIGHT LBS	MANUFACTURER AND MODEL	NOTES
AHU-2	15	45	37.54	PRE-FILTER	8	0.11	0.35	460	3	17	19		82-1/4X57-3/8X40-3/8	1,202	AAON RN	1

GENERAL NOTES APPLIES TO ALL UNITS:
- A. PERFORMANCE IS AT SITE CONDITIONS
- B. APD ON ALL COILS AND COMPONENTS IS AT COOLING TOTAL CFM
  ALL OTHER PERFORMACE IS AT SPECIFIED CFM FOR THAT COMPONENT
- C. HEAT PUMP SOURCE FLUID IS 30% PROPYLENE GLYCOL 45-75°F
- D. DIRTY FILTER APD SHALL BE INCLUDED IN INTERNAL STATIC PRESSURE
- E. TOTAL STATIC PRESSURE (TSP) IS THE MAXIMUM ALLOWED. SELECTIONS MAY BE MADE WITH LESS TSP REQUIRED
- F. SUPPLY ESP INCLUDES RETURN DUCT ESP FOR RELIEF OR EXHAUST FAN ARRANGMENTS
- G. ALL FANS SHALL BE MIN FAN EFFICIENCY GRADE FEG - 67 AND SELECTED WITHIN 15% OF THEIR MAX EFFICIENCY POINT
- H. AIR HANDLERS MAY CONTAIN CAPACITY FOR RESERVE AND DUCT LEAKAGE. BALANCE TO PLAN CFM
- I. ALL COMPONENTS MUST BE CAPABLE OF STABLE OPERATION AT THE MINIMUM SCHEDULED CFM

UNIT SPECIFIC NOTES
1 UNIT OPERATES ON CHILLED WATER SUPPLY 45°F - 50°F SEE PIPING DETAILS FOR VALVE CONTROL TO MAINTAIN 65°F MINIMUM ENTERING CONDENSER WATER DURING COOLING

HEAT EXCHANGER SCHEDULE

TAG	HEAT PUMP SIDE: GPM	EWT °F	LWT °F	WPD PSI	FLUID	FOUL. FACT.	SYSTEM SIDE: GPM	EWT °F	LWT °F	WPD PSI	FLUID	FOUL. FACT.	MBH	WEIGHT LB.	MANUFACTURER & MODEL	NOTES
HX-1	15	77.6	65	<5	30% GLYCOL	0.002	10	45	60.1	<10	WATER	0.001	94.5	<75	ALFA LAVAL OR TRANTER GASKETED PLATE	
	15	37.5	45	<5	30% GLYCOL	0.002	22.5	47	42	<10	WATER	0.001	56.3			

NOTES:
1. PROVIDE HEAT EXCHANGER THAT CAN ATTAIN BOTH PERFORMANCE POINTS LISTED
2. HEAT PUMP FLUID IS 30% PROPYLENE GLYCOL

FAN SCHEDULE

TAG	SERVICE	TYPE	CFM	ESP	BHP	FAN RPM	DRIVE	MOTOR CONTROLLER	DAMPER TYPE	DAMPER APD	ELECTRICAL HP	ELECTRICAL V/PH	WEIGHT LBS	MANUFACTURER & MODEL	NOTES
EF-O1	EXHAUST	DOWNBLAST ROOF VENTILATOR	175	0.5	0.05	1380	DIRECT	INTEGRAL VFD/ECM WITH LOCAL FIXED SPEED	GRAVITY BDD	0.1	1/4	115/1	38	GREENHECK G-097-VG	1,2,3
EF-O2	RESIDENTIAL RANGE EXHAUST	DOWNBLAST ROOF VENTILATOR	100	0.5	0.03	1196	DIRECT	INTEGRAL VFD/ECM WITH LOCAL FIXED SPEED	GRAVITY BDD	0.1	1/4	115/1	38	GREENHECK G-097-VG	1,2,4

GENERAL NOTES:
- A. PERFORMANCE IS AT SITE CONDITIONS
- B. FANS MAY CONTAIN RESERVE CAPACITY, BALANCE TO PLAN CFM.
- C. DAMPER APD IS MAX ALLOWED AND IS INCLUDED WITH ESP

NOTES:
1. ROOF CURB
2. MANUAL SPEED CONTROL DIAL AND DISCONNECT
3. OPERATES CONTINUOUSLY
4. CONTROLLED BY SWITCH ON RANGE HOOD

MISCELLANEOUS PLUMBING EQUIPMENT - PHASE 4

TAG	DESCRIPTION	ELECTRICAL POWER	AMPS	V	PH	NOTES
DWET-1	DOMESTIC HOT WATER EXPANSION TANK; ASME CONSTRUCTED AND LABELED BLADDER TYPE WITH MINIMUM ACCEPTANCE VOLUME OF 7 GALLONS. AMTROL ST-35CL OR EQUAL	-	-	-	-	
HWCP-1	DOMESTIC HOT WATER CIRCULATING PUMP; 2.3 GPM AT 3FT OF HEAD, GRUNDFOS UP 15-10 B5 OR SIMILAR.	25 WATTS	0.22	115	1	

NOTES:

HEAT PUMP DOMESTIC HOT WATER GENERATOR SCHEDULE

TAG	SERVICE	KW OUTPUT	MBH OUTPUT	FUEL TYPE	CAPACITY GALS	RECOVERY GPH	EWT °F	LWT °F	ELECTRICAL V	PH	FLA	MCA	OPD	WEIGHT LB.	MANUFACTURER & MODEL	NOTES
DWH-1	DOMESTIC HOT WATER	22	75	ELEC	112	90	40	140	240	1	67	-	-	1,461	STATE CHP-120	1,2,3,4

GENERAL NOTES:
- A. PERFORMANCE IS AT SEA LEVEL
- B. HEATED FLUID IS WATER

NOTES:
1. TWO HEATING ELEMENTS, 11KW HP, 12 KW ELECTRIC RESITANCE
2. SACRIFICIAL ANNODE
3. GLASS LINED TANK RATED TO 160 PSI
4. RECOVERY GPH IS IN HYBRID MODE WITH BOTH HEAT PUMP AND ELECTRIC ELEMENTS

GRILLE/REGISTER/DIFFUSER SCHEDULE

TAG	PURPOSE	TYPE	MOUNTING	PATTERN	NC MAX	ACCESSORIES	MANUFACTURER & MODEL	NOTES
A	SUPPLY	LOUVERED	CEILING	ALL WAY	26	OBD	TITUS TDC	1
B	RETURN	EGG CRATE	CEILING	NA	26	NONE	TITUS 50R	
C	EXHAUST	EGG CRATE	CEILING	NA	26	OBD	TITUS 50R	

GENERAL NOTES:
- A. ASSUMES 10dB ROOM ABSORPTION

NOTES:
1. 24"x24" MODULE TYPICAL, BORDER TYPE 3
2. 48", 4-SLOT DIFFUSER WITH 1" SLOT SPACING.

PUMP SCHEDULE

TAG	SERVICE	TYPE	GPM	HEAD (FT)	RPM	PEIcl	MOTOR CONTROL TYPE	ELECTRICAL HP	V	PH	MANUFACTURER & MODEL	NOTES
CWCP-1	HEAT PUMP CIRCULATION	CIRCULATOR	15	20.00	3,441	54.3	STARTER/CONTACTOR	1/6	115	1	GRUNDFOS	1

GENERAL NOTES:
A PEIcl = HYDRAULIC INSTITUTE PUMP EFFICIENCY INDEX FOR CONSTANT LOAD

NOTES:
1. FLUID IS WATER @ 50-75°F

CEILING RADIANT HEATER SCHEDULE

TAG	TYPE	CAPACITY BTUH	POWER WATTS	MOUNTING	ELECTRICAL VOLTS/PH	MANUFACTURER & MODEL	NOTES
CRH-1	CEILING PANEL	1705	500	RECESSED	120/1	BERKO CP	1, 2
CRH-2	CEILING PANEL	1705	500	RECESSED	120/1	BERKO CP	1, 2
CRH-3	CEILING PANEL	1057	310	RECESSED	120/1	BERKO CP	1, 2
CRH-4	CEILING PANEL	853	250	RECESSED	120/1	BERKO CP	1, 2

GENERAL NOTES:
1. CAPACITIES ARE AT SEA LEVEL CONDITIONS.
2. PROVIDE WITH WALL MOUNTED BAS THERMOSTAT

PLUMBING FIXTURE SCHEDULE

SYM.	DESCRIPTION	CONNECTION SIZES* W	V	C	H	ELECT. REQ'D
EWC-1	ELECTRIC WATER COOLER, ADA, ELKAY MODEL ezH20 LVRC8WSK, STAINLESS STEEL TOP AND SIDE PANELS, 8 GPH CHILLER ARI CAPACITY, BOTTLE FILLER AND FILTER MODEL LVRCWS, 115V / 60HZ	1-1/4"	1-1/4"	1/2"	-	115V
FD-1	FLOOR DRAIN (FINISHED AREAS) - JOSAM 30000-C, COATED CAST IRON FLOOR DRAIN, TWO PIECE BODY, DOUBLE DRAINAGE FLANGE, BOTTOM NO-HUB OUTLET CONNECTION, 1/2" TRAP PRIMER TAP IF REQUIRED, ADJUSTABLE SATIN BRONZE STRAINER, SEDIMENT BUCKET, VANDAL PROOF SCREWS.	PLAN	-	-	-	
GD-1	GARBAGE DISPOSER, IN-SINK-ERATOR BADGER 5XP, CONTINUOUS FEED, STAINLESS STEEL GRINDING ELEMENTS AND SWIVEL LUGS, 3/4 HP, 8.1 AMPS, 115V, 1 PH.	1-1/2"	-	-	-	115V
IMB-1	ICEMAKER WALL BOX, GUY GRAY, 20 GAUGE POWDER COATED WHITE BOX, 1/2", 1/4 TURN VALVE WITH WATER HAMMER ARRESTER	-	-	1/2"	-	
L-1	LAVATORY, SELF-RIMMING COUNTERTOP, ADA COMPLIANT, KOHLER MODEL K-2196, WHITE VITREOUS CHINA, 20-1/4" x 17-1/2" OVAL WITH SINGLE FAUCET CENTER, 1-1/4" TAILPIECE, OVERFLOW, CHROME PLATED CAST BRASS ADJUSTABLE OFFSET 1-1/4" P-TRAP WITH CLEAN-OUT, 3/8" FLEXIBLE SUPPLIES, 1/4-TURN STOPS WITH LOOSE KEY, GRID STRAINER. FAUCET, ZURN MODEL Z6913, SENSOR OPERATED, BATTERY POWERED, 0.5 GPM VANDAL-RESISTANT AERATOR, NSF-61 LEAD FREE. INSULATE SUPPLY AND WASTE WITH TRUEBRO INC. INSULATION KIT. ALL COMPONENTS MUST COMPLY WITH ADA. PROVIDE WITH WATTS LFUSG-B THERMOSTATIC MIXING VALVE.	1-1/4"	1-1/4"	1/2"	1/2"	BATTERY
MSB-1	MOP BASIN, FIAT, TERRAZZO TSB100, 24" X 24" X 12 COMBINATION DOME STRAINER, STAINLESS STEEL RIM GUARDS ALL SIDES. FAUCET- ZURN MODEL Z841M1 CHROME PLATED WITH LEVER HANDLES, INTEGRAL STOPS, VACUUM BREAKER, WALL BRACE, PAIL HOOK AND 3/4" HOSE THREAD ON SPOUT, MOUNT AT 36"AFF. PROVIDE CHECK VALVES IN HOT AND COLD WATER LINES. PROVIDE STAINLESS STEEL WALL GUARDS ON ALL EXPOSED WALLS.	3"	1-1/2"	1/2"	1/2"	
OD-1	OVERFLOW ROOF DRAIN, JOSAM SERIES 21500 WITH COATED CAST IRON BODY, BOTTOM OUTLET, ADJUSTABLE TOP, LOCKING CAST IRON DOME STRAINER WITH STAINLESS STEEL MESH SCREEN COVER, DECK CLAMP, CLAMP RING AND GRAVEL GUARD. PROVIDE 2" HIGH PLASTIC INTERNAL STANDPIPE WHEN MOUNTED AT SAME LEVEL AS ROOF DRAIN.	PLAN	-	-	-	
RD-1	ROOF DRAIN, JOSAM SERIES 21500 WITH COATED CAST IRON BODY, BOTTOM OUTLET, ADJUSTABLE TOP, LOCKING CAST IRON DOME STRAINER WITH STAINLESS STEEL MESH SCREEN COVER, DECK CLAMP, CLAMP RING AND GRAVEL GUARD.	PLAN	-	-	-	
S-1	KITCHEN SINK, ELKAY MODEL DLR332210, TWO COMPARTMENT, 18 GAUGE TYPE 304 STAINLESS STEEL, 33" X 22" O.D.10" DEEP BOWL, SELF RIMMING, STAINLESS STEEL BASKET STRAINER. 1 1/2" 17 GAUGE CHROME PLATED P-TRAP WITH CLEAN-OUT, CHROME PLATED FLEXIBLE ANGLE SUPPLIES WITH KEYED STOPS. FAUCET, ZURN MODEL Z871G1, 8"CENTERS, DECK MOUNTED FITTING, CAST SWING SPOUT, AERATOR, LEVER HANDLES, CERAMIC DISC CARTRIDGES, WITH HAND SPRAY.	1-1/2"	1-1/4"	1/2"	-	
SH-1	HAND SPRAY SHOWER UNIT (ADA COMPLIANT) SYMMONS MODEL 1-25-VT-FS WITH PRESSURE BALANCED MIXING VALVE, VISUAL THERMOMETER, 4-500VT VOLUME CONTROL, VACUUM BREAKER, WALL/HAND SHOWER WITH 5'-0" METAL HOSE. SEE ARCHITECTURAL DRAWINGS FOR MOUNTING HEIGHT, ASSE 1016.	-	-	1/2"	1/2"	
WC-1	WATER CLOSET, WALL MOUNTED, WALL OUTLET, 1.6 GPF, FLUSH VALVE, KOHLER KINGSTON MODEL K4330, WHITE VITREOUS CHINA, SIPHON JET ELONGATED RIM BOWL WITH 1 1/2" TOP SPUD. K-4670-CA OPEN FRONT SEAT LESS COVER, CARRIER AS REQUIRED BOLTED TO FLOOR. FLUSH VALVE, SLOAN ROYAL WES-111-YO DUAL FLUSH.	4"	2"	1-1/4"	-	BATTERY
WH-1	WALL HYDRANT , FREEZE-PROOF, WOODFORD MODEL B65, VACUUM BREAKER, CHROME PLATED BRASS BODY, WALL BOX WITH COVER, WITH LOOSE TEE KEY.	-	-	3/4"	-	
NGWO-1	NATURAL GAS WALL OUTLET, SURFACE MOUNTED, BUNABY G0101-2#-SS-50, GAS OUTLET BOX AND PLUG, STAINLESS STEEL, OUTDOOR USE ONLY, 1/2" NPT INLET CONNECTION, 3/8" QUICK DISCONNECT PLUG INCLUDED	-	-	-	-	
RH-1	ROOF HYDRANT, FREEZ PROOF, WOODFORD MODEL SRH-MS, CAST IRON SUPPORTS			3/4"		

* CONNECTION SIZES EQUAL BRANCH PIPE SIZES UNLESS NOTED ON PLAN OR REQUIRED TO BE OVERSIZED BY CODE.

VARIABLE AIR VOLUME UNIT SCHEDULE - ELECTRIC COIL

TAG	AREA SERVED	INTERIOR PERIMETER	INLET SIZE	COOLING MAX CFM	COOLING MIN CFM	HEATING CFM	EAT F	LAT F	Kw	SOUND ATTEN. Y/N?	MANUFACTURER & MODEL	NOTES
VAV-1	OFFICES	PERIMETER	8	370	130	300	65	90	2.0	NO	PRICE SDV	
VAV-2	COMMON AREAS	PERIMETER	9	840	170	490	64	90	3.5	NO	PRICE SDV	
VAV-3	PROGRAMMER'S ROOM	PERIMETER	8	290	130	130	65	90	1.0	NO	PRICE SDV	
VAV-4	CONTROL ROOM	INTERIOR	12	1250	300	NONE				NO	PRICE SDV	1

GENERAL NOTES APPLIES TO ALL VAV:
- A. PERFORMANCE IS AT PROJECT ALTITUDE
- B. ALL UNITS SHALL HAVE SCR CONTROL UNLESS NOTED OTHERWISE
- C. SEE ELECTRICAL DRAWINGS FOR POWER REQUIREMENTS
- D. PROVIDE UNIT WITH SINGLE POINT POWER CONNECTION, DISCONNECT, AND CONTROL TRANSFORMER COMPATIBLE WITH BAS
- E. WIDE OPEN APD SHALL NOT EXCEED 0.2" W.G. AT MAX CFM
- F. SEE SPECIFICATION FOR SOUND PERFORMANCE OF BASIC UNIT AND WITH SOUND ATTENUATOR

NOTES:
1. COOLING ONLY
2. BOX IS FOR VENTILATION AND BACKUP COOLING ONLY, SET COOLING SETPOINT +5 DEGREES ABOVE FAN COIL EXISTING COOLING SETPOINT

FFKR ARCHITECTS
730 Pacific Avenue · Salt Lake City, Utah 84104
O 801.521.6186 · FFKR.COM

RMH GROUP
engineering a greener future
MECHANICAL, ELECTRICAL, INDUSTRIAL + SUSTAINABLE DESIGN
12600 West Colfax Avenue
Lakewood Colorado 80215
Phone 303.239.0909
Fax 303.235.0218
www.rmhgroup.com
RMH Group project number

© 2021
19977

U OF U BLDG. 303 SEISMIC UPGRADE, PROJ.#22210 - C.D. PHASE 4
SALT LAKE CITY UTAH
CONSTRUCTION SET - 10-10-2022

STATE OF UTAH
JEFFREY W ELSNER
10/10/2022
NO. 9799596-2202
PROFESSIONAL ENGINEER

△	DATE	REVISION
0	10/10/2022	CONSTRUCTION SET

PROJECT NUMBER

EQUIPMENT SCHEDULES

M-001-4

5/7/2019 11:13:15 AM
H:\Jobs19\19977\AutoCAD\SHEETS BY PHASE\SEISMIC UPGRADE PH4\19977_U303_M001-M004_Schedules.dwg, 10/7/2022 9:30:18 AM, DWG To PDF.pc3

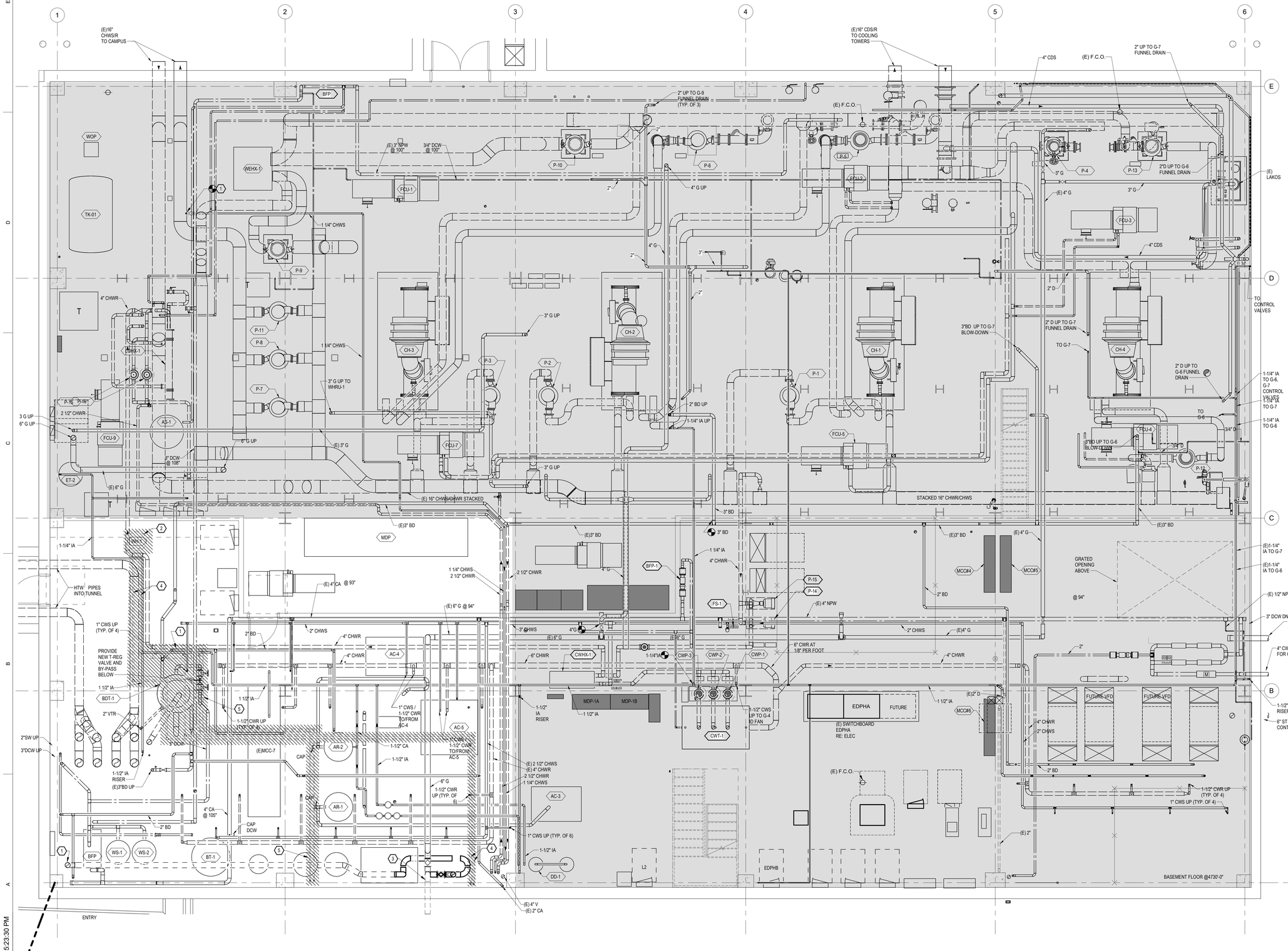

1 BASEMENT FLOOR - MECHANICAL DEMOLITION PLAN
SCALE: 1/4" = 1'-0"

PLAN NORTH TRUE NORTH

SHEET NOTES

1. REFER TO GENERAL NOTES ON COVER SHEET.
2. REMOVE EQUIPMENT AND ASSOCIATED ITEMS SHOWN IN HATCHED AREAS.
3. PREPARE SYSTEM FOR DEMOLITION BY DRAINING AND DISPOSING OF TREATED WATER PROPERLY.
4. ASSOCIATED ITEMS FOR REMOVAL INCLUDE PIPE, INSULATION, LAGGING, VALVES, PIPE SUPPORTS, PNEUMATIC AND ELECTRIC CONTROL DEVICES, INSTRUMENTATION, ASSOCIATED CONTROL WIRING AND TUBING. REMOVE PNEUMATIC TUBE BACK TO BRANCH CONNECTION AND CAP WITH AIR TIGHT SEAL (CRIMPING OR BENDING OVER THE TUBE WILL NOT BE ACCEPTED).
5. CONTRACTOR SHALL TRACE EACH LINE PRIOR TO REMOVAL TO VERIFY THE LINE SHOULD BE REMOVED.
6. VERIFY ALL CONDUIT CONTENT. REMOVE ALL UNUSED CONDUIT AND MOVE CONDUIT AS REQUIRED WITH APPROVAL OF UNIVERSITY OPERATIONS STAFF.
7. ALL ELECTRICAL WIRING THAT IS TO BE DEMOLISHED SHALL BE RETURNED TO THE UNIVERSITY.
8. SEE ELECTRICAL, STRUCTURAL AND ARCHITECTURAL DRAWINGS FOR COORDINATION.
9. TEMPORARILY COVER ALL OPEN PIPE ENDS TO AVOID CONTAMINATION DURING CONSTRUCTION. PROVIDE CAP OR BLIND-FLANGE FOR PRESSURIZED PIPE SYSTEMS.

KEY NOTES

1. REMOVE EXISTING HTHW TO DOMESTIC WATER HEAT EXCHANGER AND ASSOCIATED VALVES, CONTROLS, AND SUPPORTS.
2. REMOVE EXISTING DOMESTIC HOT WATER STORAGE TANK
3. REMOVE EXISTING BURIED GAS LINE TO WALL, CAP PIPE AT WALL
4. REMOVE EXISTING DOMESTIC COLD WATER TO HEAT EXCHANGER AND DOMESTIC HOT WATER TO EXISTING OFFICE.
4. REMOVE EXISTING HTHW SERVING DOMESTIC WATER HEAT EXCHANGER. PIPING EXTEND UP THROUGH OPERATING FLOOR TO PIPING LEVEL. DEMOLISHION OF THIS PIPING ON THE PIPING LEVEL IS PART OF PHASE 2.
5. REMOVE EXISTING BURIED GAS LINE TO WALL, CAP PIPE AT WALL
6. DEMOLISH EXISTING DOMESTIC WATER TO EXISTING FIRE HOSE ONCE FIRE SUPPRESSION SYSTEM IS INSTALLED

FFKR ARCHITECTS
730 Pacific Avenue · Salt Lake City, Utah 84104
O 801.521.6186 · FFKR.COM

RMH GROUP
engineering a greener future
MECHANICAL ELECTRICAL
INDUSTRIAL + SUSTAINABLE DESIGN
12600 West Colfax Avenue
Lakewood Colorado 80215
Phone 303.239.0909
Fax 303.235.0218
www.rmhgroup.com
RMH Group project number

© 2021 19977

U OF U BLDG. 303 SEISMIC UPGRADE, PROJ. #22436 - PHASE 4
SALT LAKE CITY UTAH
CONSTRUCTION SET - 10-10-2022

STATE OF UTAH
JEFFREY W. ELSNER
10/10/2022
NO. 9799596-2202
PROFESSIONAL ENGINEER

	DATE	REVISION
0	10/10/2022	CONSTRUCTION SET

PROJECT NUMBER 18136

BASEMENT FLOOR - MECHANICAL DEMOLITION PLAN

MD-100-4

10/7/2022 5:23:30 PM

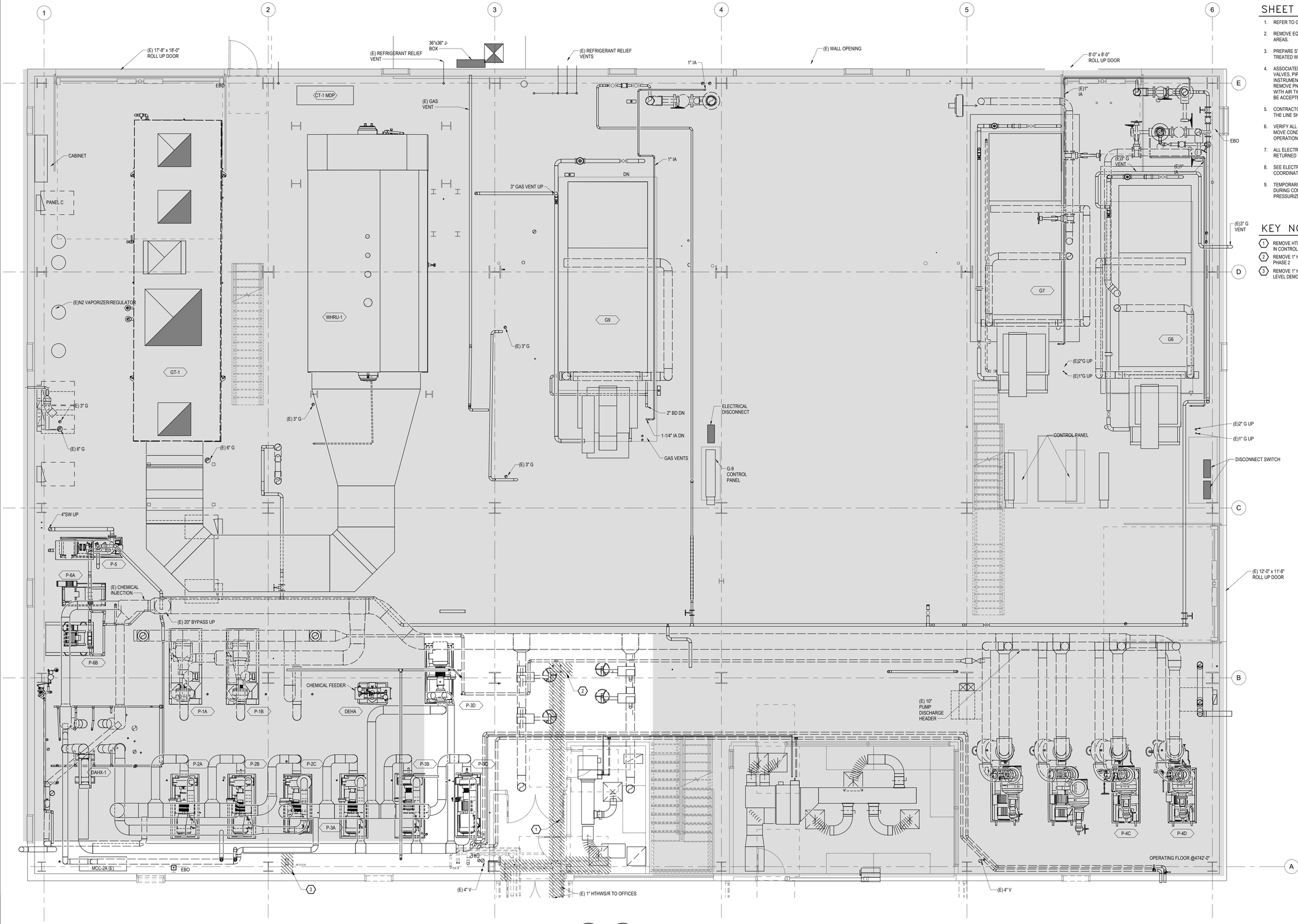

1 OPERATING FLOOR - MECHANICAL DEMOLITION PLAN
SCALE: 1/4" = 1'-0"

PLAN NORTH TRUE NORTH

SHEET NOTES

1. REFER TO GENERAL NOTES ON COVER SHEET.
2. REMOVE EQUIPMENT AND ASSOCIATED ITEMS SHOWN IN HATCHED AREAS.
3. PREPARE SYSTEM FOR DEMOLITION BY DRAINING AND DISPOSING OF TREATED WATER PROPERLY.
4. ASSOCIATED ITEMS FOR REMOVAL INCLUDE PIPE, INSULATION, LAGGING, VALVES, PIPE SUPPORTS, PNEUMATIC AND ELECTRIC CONTROL DEVICES, INSTRUMENTATION, ASSOCIATED CONTROL WIRING AND TUBING. REMOVE PNEUMATIC TUBE BACK TO BRANCH CONNECTION AND CAP WITH AIR TIGHT SEAL (CRIMPING OR BENDING OVER THE TUBE WILL NOT BE ACCEPTED).
5. CONTRACTOR SHALL TRACE EACH LINE PRIOR TO REMOVAL TO VERIFY THE LINE SHOULD BE REMOVED.
6. VERIFY ALL CONDUIT CONTENT. REMOVE ALL UNUSED CONDUIT AND MOVE CONDUIT AS REQUIRED WITH APPROVAL OF UNIVERSITY OPERATIONS STAFF.
7. ALL ELECTRICAL WIRING THAT IS TO BE DEMOLISHED SHALL BE RETURNED TO THE UNIVERSITY.
8. SEE ELECTRICAL, STRUCTURAL AND ARCHITECTURAL DRAWINGS FOR COORDINATION.
9. TEMPORARILY COVER ALL OPEN PIPE ENDS TO AVOID CONTAMINATION DURING CONSTRUCTION. PROVIDE CAP OR BLIND-FLANGE FOR PRESSURIZED PIPE SYSTEMS.

KEY NOTES

1. REMOVE HTWS/R PIPES TO OFFICE, FIN-TUBE IN HALLWAY AND FIN-TUBE IN CONTROL OFFICE.
2. REMOVE 1" HTWS/R UP TO PIPE LEVEL, PIPE LEVEL DEMO IS PART OF PHASE 2
3. REMOVE 1" HTWS/R UP TO PIPE LEVEL AND DOWN TO BASEMENT. PIPE LEVEL DEMO IS PART OF PHASE 2

FFKR ARCHITECTS
730 Pacific Avenue · Salt Lake City, Utah 84104
O 801.521.6186 · FFKR.COM

RMH GROUP
engineering a greener future
MECHANICAL, ELECTRICAL, INDUSTRIAL + SUSTAINABLE DESIGN
12600 West Colfax Avenue
Lakewood Colorado 80215
Phone 303.238.0909
Fax 303.238.0218
www.rmhgroup.com
RMH Group project number 19977

© 2021

U OF U BLDG. 303 SEISMIC UPGRADE, PROJ. #22436 - PHASE 4

SALT LAKE CITY UTAH

CONSTRUCTION SET - 10-10-2022

STATE OF UTAH
JEFFREY W. ELSNER
10/10/2022
NO. 9799596-2202
PROFESSIONAL ENGINEER

	DATE	REVISION
0	10/10/2022	CONSTRUCTION SET

PROJECT NUMBER 18136

OPERATING FLOOR - MECHANICAL DEMOLITION PLAN

MD-101-4

10/7/2022 5:24:01 PM

THESE DRAWINGS ARE A PROGRESS SET AND ARE, BY THEIR NATURE, INCOMPLETE. THEY ARE NOT SUITABLE FOR BIDDING OR CONSTRUCTION. ANY ATTEMPT TO ESTABLISH CONSTRUCTION COSTS FROM THESE DOCUMENTS MUST BE DONE WITH EXTREME CAUTION. COST ALLOWANCES MUST BE PROVIDED FOR DESIGN ELEMENTS AND MATERIALS NOT YET INDICATED ON THESE DOCUMENTS. THE RMH GROUP HAS NO RESPONSIBILITY OR LIABILITY FOR COSTS OF CONSTRUCTION ASSOCIATED WITH DESIGN ELEMENTS AND MATERIALS NOT YET SHOWN ON THESE DOCUMENTS.

SHEET NOTES

1. REFER TO GENERAL NOTES ON COVER SHEET.

KEY NOTES

1. INSTALL TEMPORARY GAS SERVICE BETWEEN GAS YARD AND GAS LINE IN PLANT BASEMENT AS SHOWN. INSTALL AND PRESSURE TEST PIPING BETWEEN POINTS OF CONNECTION SHOWN IN PREPARATION FOR CHANGE OVER FROM EXISTING SERVICE
2. DEMOLISH EXISTING GAS LINE TO BELOW GRADE PIPING TO GAS YARD AND WELD PERMANENT CAP DURING NATURAL GAS OUTAGE (SEE SHEET P201-4 FOR ADDITIONAL NOTES ON THE OUTAGE). CONNECT TEMPORARY LINE TO ONE EXISTING VALVE AND NEW PERMANENT LINE TO SECOND EXISTING VALVE.
3. CONNECT NEW 2" DCW LINE TO EXISTING 4" DCW UP STREAM OF BACKFLOW PREVENTERS. EXISTING PIPING DOWNSTREAM OF EXISTING BACKFLOW PREVENTERS CAN NOW BE NON-POTABLE WATER. NEW LINE TO OFFICES SHALL HAVE IT'S OWN RPBP AND SERVE AS DOMESTIC WATER. COORDINATE OUTAGE WITH PLANT OPERATIONS, ALLOWABLE OUTAGE DURATION WILL DEPEND ON AMBIENT TEMPERATURE WITH COOL OR COLD WEATHER PREFERRED.
4. 2" DCW UP TO OPERATING FLOOR ABOVE SERVING OFFICE AND OFFICE WATER HEATER, SEE P201-4 FOR CONTINUATION
5. LOCATION FOR NEW FIRE LINE AND FIRE ENTRY. COORDINATE REQUIREMENTS WITH FIRE SUPPRESSION CONTRACTOR, REFER TO PERFORMANCE SPECIFICATION FOR ADDITIONAL INFORMATION.
6. PROVIDE REDUCED PRESSURE BACKFLOW PREVENTER, REFER TO SPECIFICATIONS FOR REQUIREMENTS.
7. FIRE ENTRY WITH BACKFLOW PREVENTER, DRAIN AND TEST VALVES, AND FLOW SWITCH. SEE DETAIL 3 P-601-4 FOR PRELIMINARY DETAIL, FINAL DESIGN BY CONTRACTOR'S FIRE PROTECTION ENGINEER.

1 BASEMENT FLOOR - MECHANICAL PLAN
SCALE: 1/4" = 1'-0"

PLAN NORTH TRUE NORTH

FFKR ARCHITECTS
730 Pacific Avenue · Salt Lake City, Utah 84104
O 801.521.6186 · FFKR.COM

RMH GROUP
engineering + greener nature
MECHANICAL · ELECTRICAL · PLUMBING
INDUSTRIAL + SUSTAINABLE DESIGN
12500 West Colfax Avenue
Lakewood, Colorado 80215
Phone 303.239.0909
Fax 303.239.0918
www.rmhgroup.com
RMH Group project number

© 2021 RMH GROUP

U OF U BLDG. 303 SEISMIC UPGRADE, PROJ. #22436 - PHASE 4

SALT LAKE CITY UTAH

CONSTRUCTION SET - 10-10-2022

STATE OF UTAH · JEFFREY W ELDER · NO. 9799526-2202 · PROFESSIONAL ENGINEER

	DATE	REVISION
0	10/10/2022	CONSTRUCTION SET

PROJECT NUMBER 18136

BASEMENT FLOOR - MECHANICAL PLAN

M-100-4

10/7/2022 5:21:51 PM

SHEET NOTES

1. REFER TO GENERAL NOTES ON COVER SHEET.

KEY NOTES

1. IF LOW PRESSURE GAS UP AND DOWN, SEE SHEET M1004 AND M2014 FOR CONTINUATION
2. CONNECT EXISTING DUCT TO NEW VAV BOX OUTLET. THIS BOX TYPICALLY CONNECTS TO OVERHEAD DOORS. VERIFY EXISTING DUCT SIZE AND CONFIGURATION.
3. CONNECT NEW STORM AND OVERFLOW DRAINS TO EXISTING STORM AND OVERFLOW PIPING.
4. TEMPORARY GAS SERVICE PIPING IN THROUGH WALL AND DOWN TO BASEMENT, SEE SHEET P2014 AND M1004 FOR CONTINUATION.

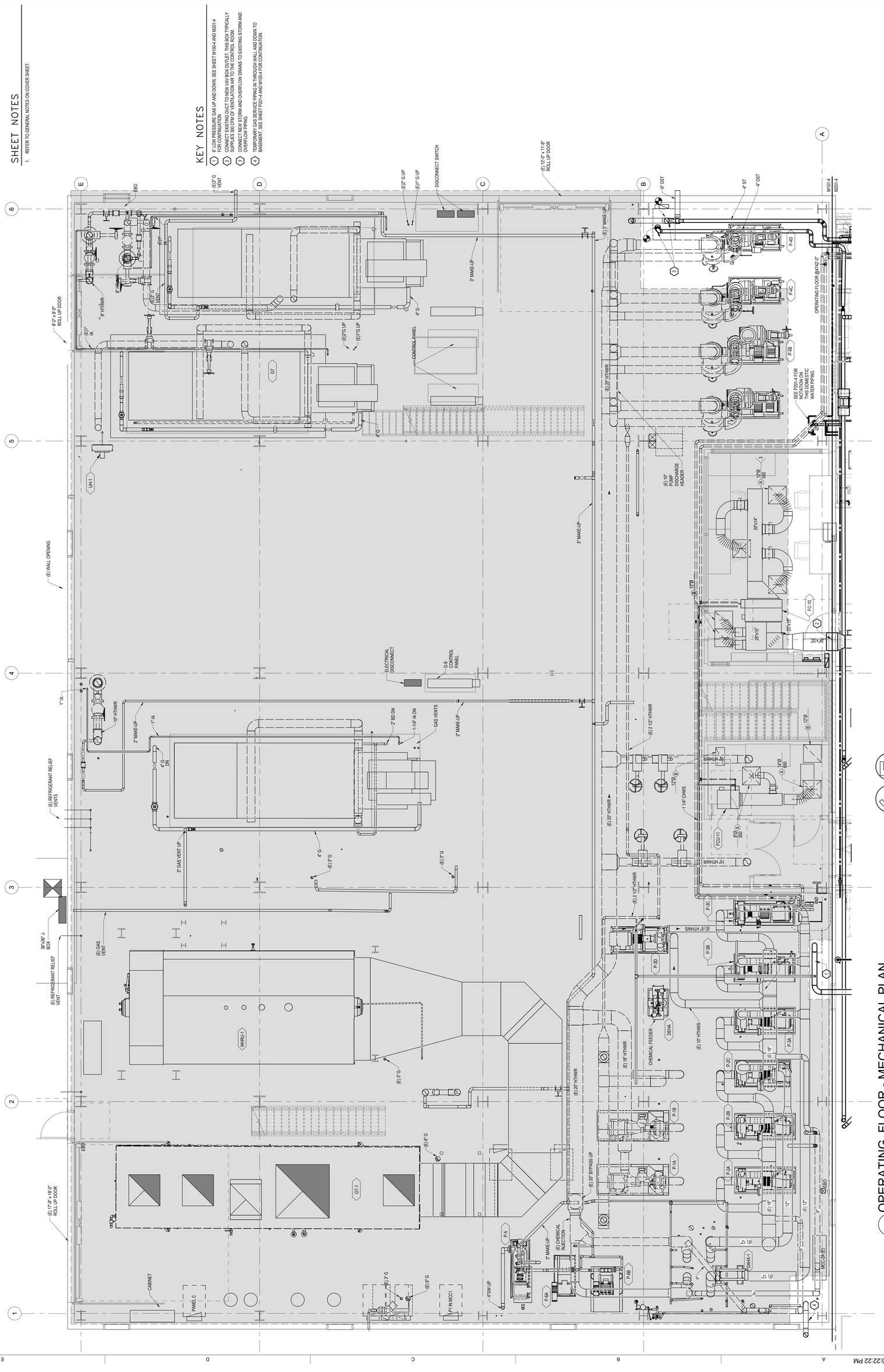

1 OPERATING FLOOR - MECHANICAL PLAN
SCALE: 1/4" = 1'-0"

U OF U BLDG. 303 SEISMIC UPGRADE, PROJ. #22436 - PHASE 4

SALT LAKE CITY UTAH

CONSTRUCTION SET - 10-10-2022

STATE OF UTAH · JEFFREY W. FLAMER · 6179556-2202 · PROFESSIONAL ENGINEER

NO.	DATE	REVISION
0	10/10/2022	CONSTRUCTION SET

PROJECT NUMBER 18136

OPERATING FLOOR - MECHANICAL PLAN

M-101-4

RMH GROUP
engineering & greener future
MECHANICAL · ELECTRICAL
INDUSTRIAL + SUSTAINABLE DESIGN
12850 West Cedar Avenue
Lakewood Colorado 80228
Phone 303.239.0909
Fax 303.239.0018
www.rmhgroup.com
RMH Group project number 19977
© 2021

FFKR ARCHITECTS
730 Pacific Avenue · Salt Lake City, Utah 84104
O 801.521.8186 · FFKR.COM

10/7/2022 5:22:22 PM

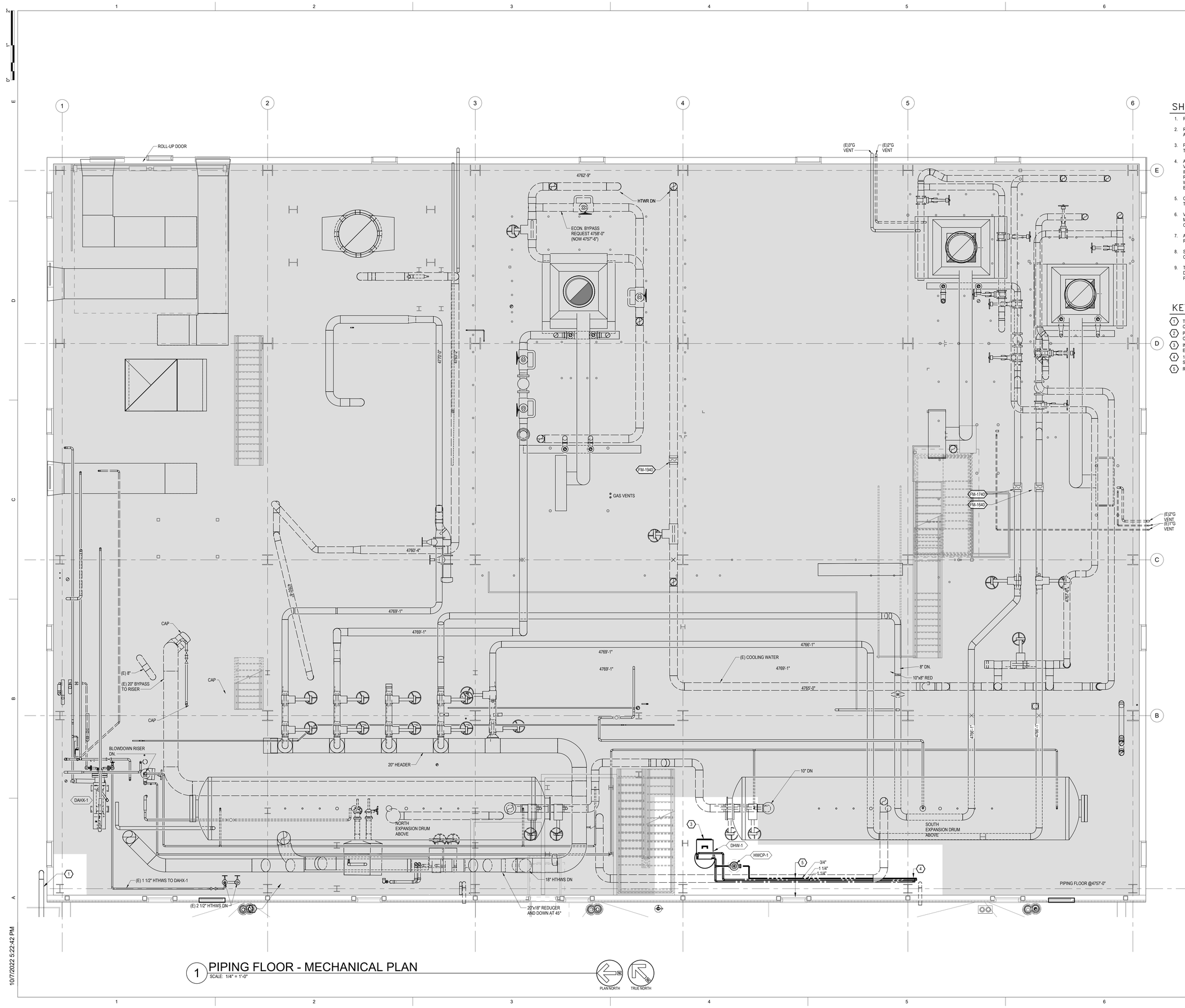

SHEET NOTES

1. REFER TO GENERAL NOTES ON COVER SHEET.
2. REMOVE EQUIPMENT AND ASSOCIATED ITEMS SHOWN IN HATCHED AREAS.
3. PREPARE SYSTEM FOR DEMOLITION BY DRAINING AND DISPOSING OF TREATED WATER PROPERLY.
4. ASSOCIATED ITEMS FOR REMOVAL INCLUDE PIPE, INSULATION, LAGGING, VALVES, PIPE SUPPORTS, PNEUMATIC AND ELECTRIC CONTROL DEVICES, INSTRUMENTATION, ASSOCIATED CONTROL WIRING AND TUBING. REMOVE PNEUMATIC TUBE BACK TO BRANCH CONNECTION AND CAP WITH AIR TIGHT SEAL (CRIMPING OR BENDING OVER THE TUBE WILL NOT BE ACCEPTED).
5. CONTRACTOR SHALL TRACE EACH LINE PRIOR TO REMOVAL TO VERIFY THE LINE SHOULD BE REMOVED.
6. VERIFY ALL CONDUIT CONTENT. REMOVE ALL UNUSED CONDUIT AND MOVE CONDUIT AS REQUIRED WITH APPROVAL OF UNIVERSITY OPERATIONS STAFF.
7. ALL ELECTRICAL WIRING THAT IS TO BE DEMOLISHED SHALL BE RETURNED TO THE UNIVERSITY.
8. SEE ELECTRICAL, STRUCTURAL AND ARCHITECTURAL DRAWINGS FOR COORDINATION.
9. TEMPORARILY COVER ALL OPEN PIPE ENDS TO AVOID CONTAMINATION DURING CONSTRUCTION. PROVIDE CAP OR BLIND-FLANGE FOR PRESSURIZED PIPE SYSTEMS.

KEY NOTES

1. TEMPORARY GAS SERVICE PIPING SEE SHEET P201-4 AND M101-4 FOR CONTINUATION.
2. PERMANENT GAS PIPING INTO PLANT FROM GAS YARD BELOW NEW OFFICE ROOF.
3. INSTALL NEW HEAT PUMP WATER HEATER, CIRCULATION PUMP, AND EXPANSION TANK PER DETAIL ON SHEET M601-4
4. 1-1/4" DHW, 1-1/4" DCW, AND ¾" DHWC PIPING DOWN TO FLOOR BELOW. SEE SHEET P201-4 FOR CONTINUATION.
5. ROUTE NEW PIPING AT LEAST 6" HIGHER THAN NEW LOUVER

1 PIPING FLOOR - MECHANICAL PLAN
SCALE: 1/4" = 1'-0"

PLAN NORTH | TRUE NORTH

10/7/2022 5:22:42 PM

FFKR ARCHITECTS
730 Pacific Avenue · Salt Lake City, Utah 84104
O 801.521.6186 · FFKR.COM

RMH GROUP
engineering + green future
MECHANICAL · ELECTRICAL
INDUSTRIAL · SUSTAINABLE DESIGN
12500 West Colfax Avenue
Lakewood, Colorado 80215
Phone 303.239.0909
Fax 303.239.0918
www.rmhgroup.com
R&H Group project number

© 2021
15977

U OF U BLDG. 303 SEISMIC UPGRADE, PROJ. #22436 - PHASE 4
SALT LAKE CITY UTAH
CONSTRUCTION SET - 10-10-2022

STATE OF UTAH · JEFFREY W. ELSNER · NO. 9799596-2202 · PROFESSIONAL ENGINEER
10/10/2022

	DATE	REVISION
0	10/10/2022	CONSTRUCTION SET

PROJECT NUMBER 18136

PIPING FLOOR - MECHANICAL PLAN

M-102-4

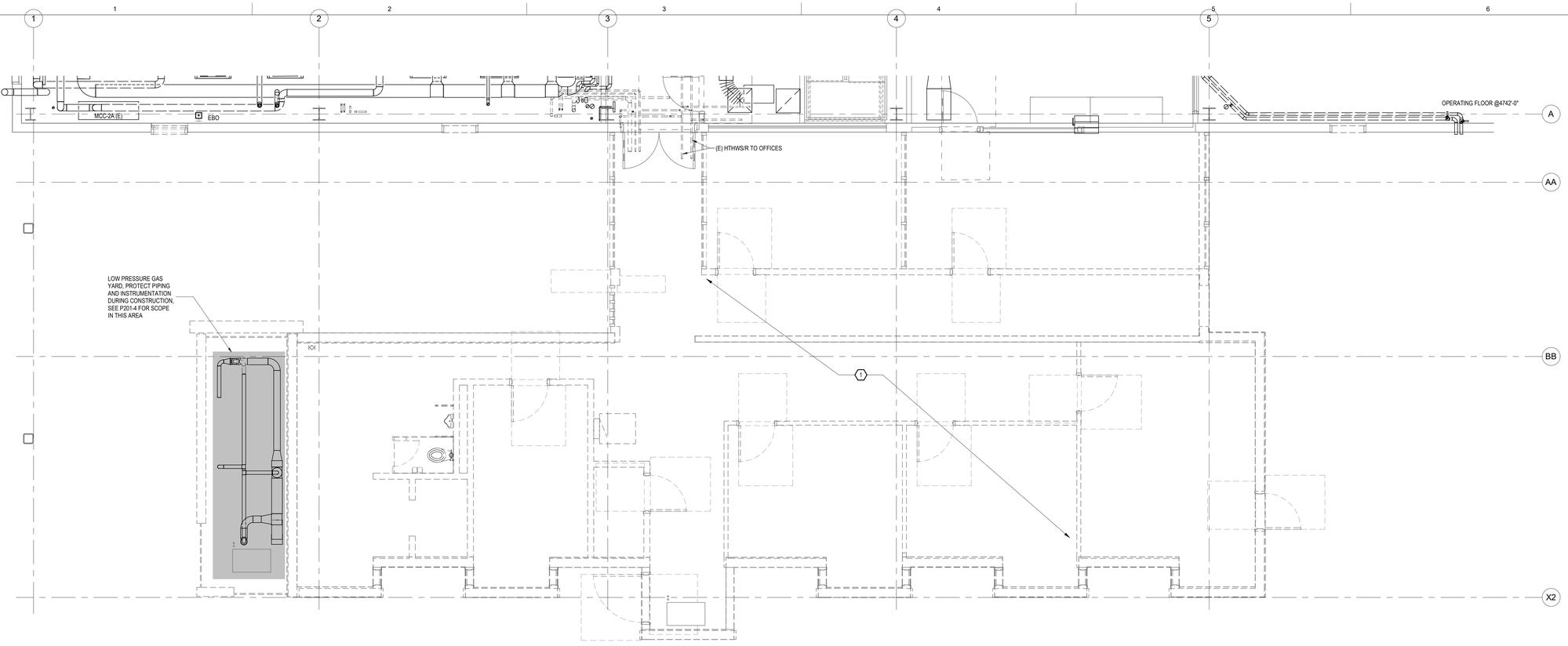

1 OFFICE - MECHANICAL DEMOLITION PLAN

SCALE: 1/4" = 1'-0"

5' 4' 3' 2' 1' 0 5' 10'

SCALE: 1/4" = 1'-0"

PLAN NORTH

TRUE NORTH

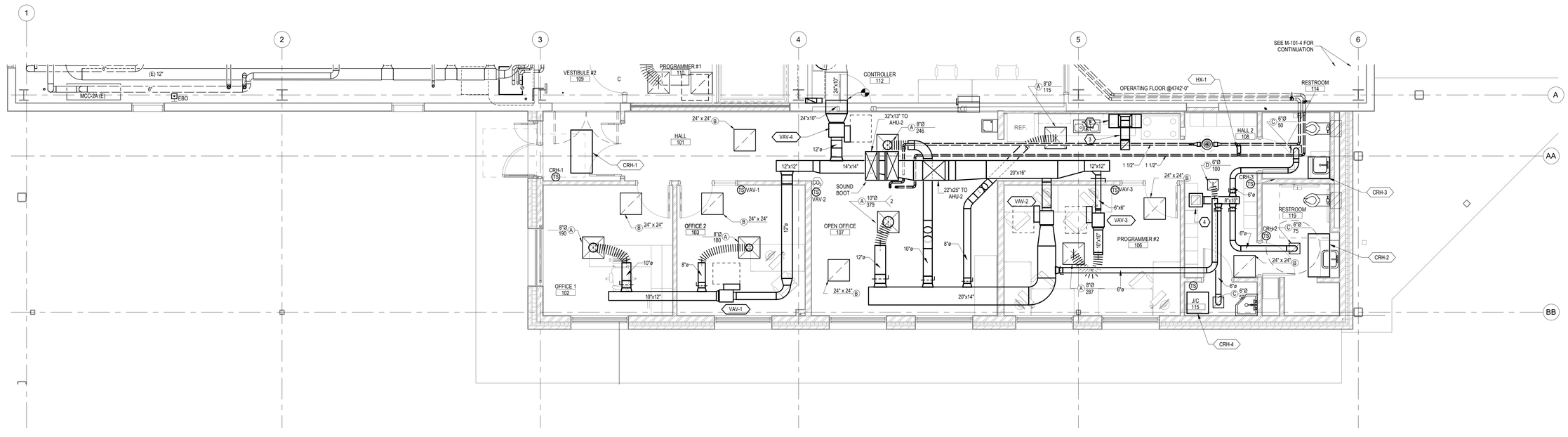

2 OFFICE - MECHANICAL PLAN

SCALE: 1/4" = 1'-0"

5' 4' 3' 2' 1' 0 5' 10'

SCALE: 1/4" = 1'-0"

PLAN NORTH

TRUE NORTH

10/7/2022 5:22:46 PM

FFKR ARCHITECTS
730 Pacific Avenue · Salt Lake City, Utah 84104
O 801.521.6186 · **FFKR.COM**

RMH GROUP
engineering + green future
MECHANICAL · ELECTRICAL
INDUSTRIAL + SUSTAINABLE DESIGN
12500 West Colfax Avenue
Lakewood, Colorado 80215
Phone 303.239.0909
Fax 303.239.0918
www.rmhgroup.com
R&H Group project number

© 2021
15977

U OF U BLDG. 303 SEISMIC UPGRADE, PROJ. #22377 - PHASE 2 CD

SALT LAKE CITY UTAH

CONSTRUCTION SET - 10-10-2022

SHEET NOTES

1. REFER TO GENERAL NOTES ON COVER SHEET.

KEY NOTES

1. REMOVE ALL MECHANICAL AND PLUMBING EQUIPMENT, ASSOCIATED PIPING AND CONTROLS FROM EXISTING OFFICE. SEE P201-4 FOR TEMPORARY GAS SERVICE REQUIREMENTS
2. PROVIDE NEW HOOD OVER EXISTING RANGE. HOOD SHALL BE RESIDENTIAL STYLE, NON-GREASE APPLICATION, WITH A CAPTURE AREA OF 36"x10" MINIMUM AND EXHAUST CONNECTION. FINISH BY ARCHITECT. PROVIDE WALL SWITCH FOR EF-02 ON HOOD.
3. 10"x10" DUCT OFFSET AROUND STORM DRAIN PIPING (SEE P201-4) TO NEW EXHAUST FAN EF-02 ON ROOF (SEE M202-4).
4. 14"x14", OR SIZED TO MATCH EXHAUST FAN INLET, UP TO EF-01 ON ROOF (SEE M202-4). FAN SHALL OPERATE CONTINUOUSLY
5. PROVIDE RETURN AIR OPENINGS IN WALLS THAT EXTEND UP TO ROOF DECK, SIZED AS NOTED.

STATE OF UTAH · JEFFREY W ELMER · NO. 9786506-2202 · PROFESSIONAL ENGINEER

	DATE	REVISION
1	10/10/2022	CONSTRUCTION SET

PROJECT NUMBER 18136

OFFICE - MECHANICAL PLAN

M-201-4

SHEET NOTES

1. REFER TO GENERAL NOTES ON COVER SHEET.

KEY NOTES

1 NEW LOUVER, TYPICAL OF SIX TOTAL IN THIS WALL, SEE ARCHITECTURAL ELEVATION FOR ADDITIONAL LOUVERS ON LEVELS ABOVE.

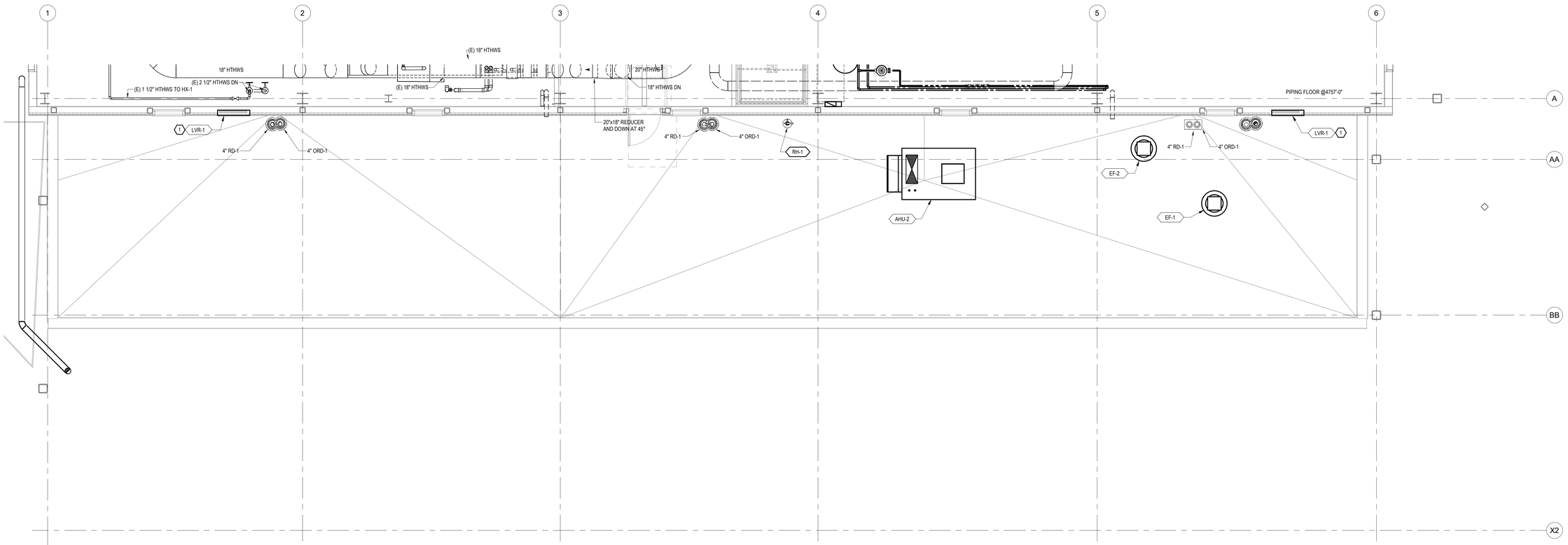

3 OFFICE ROOF - MECHANICAL PLAN
SCALE: 1/4" = 1'-0"

5' 4' 3' 2' 1' 0 5' 10'
SCALE: 1/4" = 1'-0"

PLAN NORTH TRUE NORTH

10/7/2022 5:22:47 PM

FFKR ARCHITECTS
730 Pacific Avenue · Salt Lake City, Utah 84104
O 801.521.6186 · **FFKR.COM**

RMH GROUP
engineering + green future
MECHANICAL + ELECTRICAL
INDUSTRIAL + SUSTAINABLE DESIGN
12600 West Colfax Avenue
Lakewood, Colorado 80215
Phone 303.239.0909
Fax 303.232.0538
www.rmhgroup.com
RMH Group project number

© 2021 RMH 15977

U OF U BLDG. 303 SEISMIC UPGRADE, PROJ. #22377 - PHASE 2 CD

SALT LAKE CITY UTAH

CONSTRUCTION SET - 10-10-2022

STATE OF UTAH
JEFFREY W ELSNER
10/10/2022
NO. 9799596-2205
PROFESSIONAL ENGINEER

	DATE	REVISION
0	10/10/2022	CONSTRUCTION SET

PROJECT NUMBER 18136

OFFICE - MECHANICAL ROOF PLAN

M-202-4

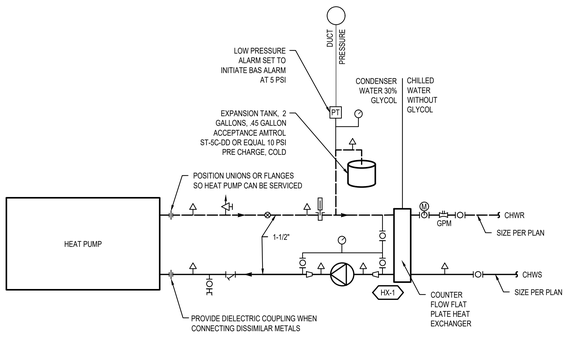

1 M-601-4 — ISOLATED PUMPED HEAT PUMP PIPING DETAIL
NONE

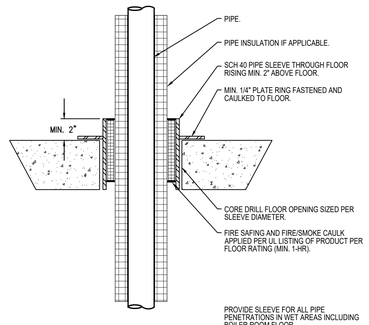

2 M-601-4 — SLEEVE DETAIL
NONE

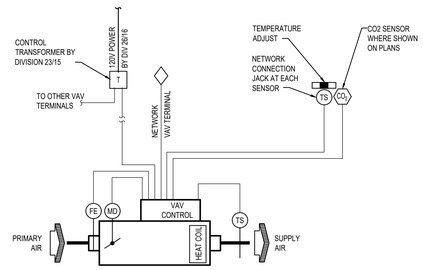

3 M-601-4 — VAV TERMINAL CONTROL DIAGRAM
NONE

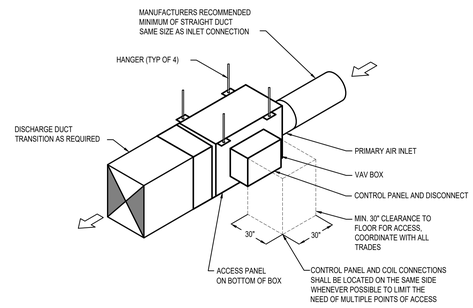

4 M-601-4 — VAV BOX DETAIL
NONE

SEQUENCE OF OPERATION: VARIABLE AIR VOLUME TERMINAL UNIT

A. WHEN AIR HANDLER IS IN COOLING MODE VAV BOX SHALL MODULATE DAMPER TO SATISFY SPACE TEMPERATURE. ELECTRIC HEATING COIL SHALL BE LOCKED OUT UNLESS BOX IS AT MINIMUM DAMPER POSITION AT WHICH POINT IT SHALL MODULATE TO MAINTAIN SPACE TEMPERATURE.

B. WHEN AIR HANDLER IS IN HEATING MODE VAV BOX DAMPER SHALL MODULATE AND ELECTRIC HEATING COIL SHALL MODULATE TO MAINTAIN SPACE TEMPERATURE.

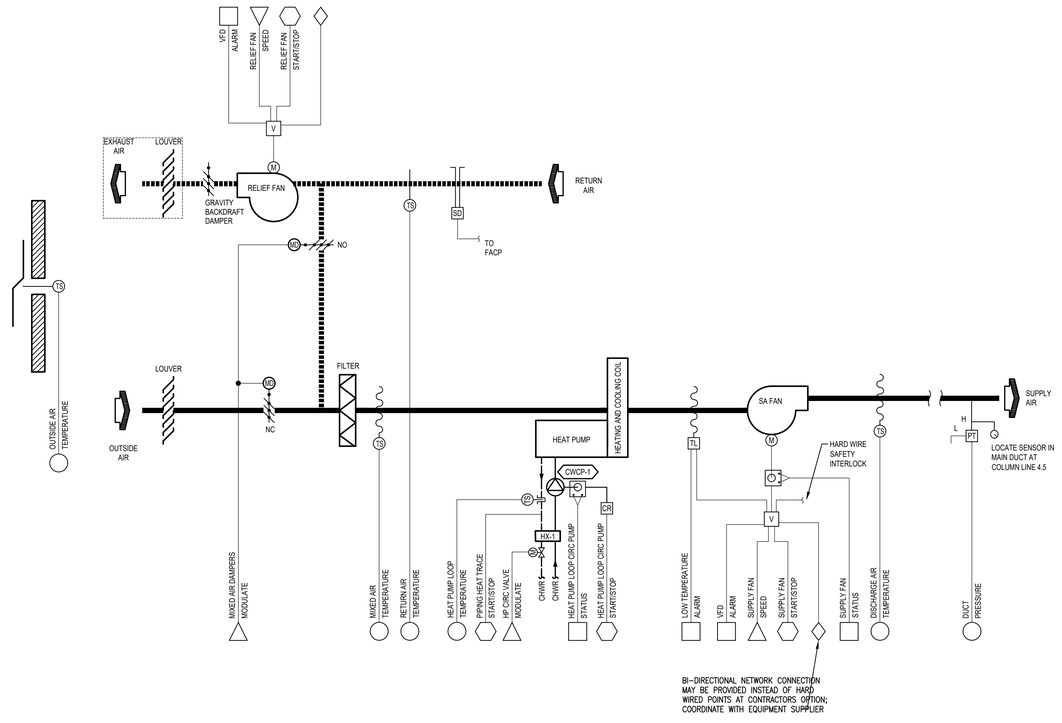

5 M-601-4 — VAV AIR HANDLER CONTROL DIAGRAM AND SEQUENCE OF OPERATIONS
NONE

SEQUENCE OF OPERATION: VARIABLE AIR VOLUME HEAT PUMP AIR HANDLER

A. OPERATION (THE UNIT SHALL OPERATE CONTINUOUSLY AT ALL TIMES):
   1. THE SUPPLY FAN SHALL RUN CONTINUOUSLY.
   2. THE HEAT PUMP SHALL MODULATE (AND CYCLE AT LOW LOAD) TO MAINTAIN THE DISCHARGE AIR TEMPERATURE SETPOINT.
   3. THE DISCHARGE AIR SETPOINT SHALL BE RESET BASED ON THE ZONE WITH THE HIGHEST COOLING DEMAND FROM 55 UP TO 85 DEGREES TO LIMIT REHEAT AND HEATING AT THE TERMINAL BOXES.

B. THE SUPPLY FAN SHALL BE ENERGIZED. THE SUPPLY AIR DUCT STATIC PRESSURE SET POINT SHALL BE SLOWLY RAMPED FROM ZERO TO THE FINAL SET POINT VALUE AFTER THE SUPPLY FAN IS STARTED. THE AIR HANDLING UNIT SUPPLY FAN SPEED SHALL MODULATE TO MAINTAIN DUCT STATIC PRESSURE SET POINT. THE SUPPLY FAN SPEED SHALL NOT DROP BELOW 20%-(ADJUSTABLE) TO ASSURE ADEQUATE FAN MOTOR COOLING.

C. A HIGH-LIMIT FUNCTION SHALL REDUCE THE SUPPLY FAN SPEED TO KEEP THE SUPPLY DUCT PRESSURE FROM EXCEEDING 1.5 INCHES W.C. (ADJUSTABLE) REGARDLESS OF THE DEMAND FROM THE VAV BOXES. THE FINAL DUCT STATIC PRESSURE SET POINTS SHALL BE DETERMINED IN CONSULTATION WITH THE BALANCING CONTRACTOR. WHEN THE SUPPLY FAN IS DE-ENERGIZED THE STATIC SET POINT SHALL BE ZERO.

B. THE AIR HANDLER SHALL BE SUPPLIED AN OUTSIDE AIR TEMPERATURE FROM THE CAMPUS BAS

C. THE SUPPLY AIR TEMPERATURE SET POINT SHALL BE 55°F WHEN THE OUTSIDE AIR TEMPERATURE IS 55°F AND ABOVE. BELOW 55°F THE SUPPLY AIR TEMPERATURE THE TEMPERATURE SHALL BE RESET UPWARDS TO T-MAX. T-MAX SHALL RANGE FROM 55°F TO 85°F. T-MAX SHALL VARY SUCH THAT THE VAV BOX WITH THE HIGHEST COOLING DEMAND IS AT 90% OF ITS COOLING MAX SET POINT. THE SUPPLY AIR TEMPERATURE SET POINT SHALL CHANGE AT NO MORE THAN 5 DEGREES PER HOUR.

D. THE OUTSIDE AIR DAMPER SHALL BE AT MINIMUM POSITION (WHERE OUTSIDE AIRFLOW IS AT MINIMUM CFM AS DETERMINED BY TEST AND BALANCE CONTRACTOR) UNLESS THE UNIT IS IN ECONOMIZER COOLING OR EITHER OF THE TWO CO2 SENSORS REGISTERS CO2 AT 500 PPM OR HIGHER IN WHICH CASE THE OUTSIDE AIR DAMPER SHALL MODULATE OPEN TO MAINTAIN 500 PPM.

E. ECONOMIZER COOLING IS ENABLED WHENEVER THE OUTSIDE AIR DRY BULB TEMPERATURE IS LESS THAN THE RETURN AIR DRY BULB TEMPERATURE. WHEN THE OUTSIDE AIR DRY BULB IS GREATER THAN THE RETURN AIR DRY BULB PLUS DEADBAND, ECONOMIZER COOLING IS DISABLED. PROVIDE DEADBAND TO HEAT PUMP OPERATION WHENEVER ECONOMIZER COOLING IS ENABLED. THERE SHALL BE A MIXED AIR, LOW-LIMIT FUNCTION TO MODULATE THE MIXED AIR DAMPERS CLOSED TO PREVENT THE MIXED AIR TEMPERATURE FROM DROPPING BELOW THE MIXED AIR LOW LIMIT SET POINT OF 45°F (ADJUSTABLE). MODULATE THE RELIEF AIR FAN IN CONCERT WITH THE DAMPERS TO MAINTAIN BALANCED AIRFLOW.

F. PROVIDE DEADBAND BETWEEN HEATING AND COOLING. WHEN THE OUTDOOR AIR TEMPERATURE IS GREATER THAN THE ECONOMIZER ENABLE SET POINT, THE OUTSIDE AIR DAMPER SHALL CLOSE TO MINIMUM POSITION.

G. SAFETY SHUTDOWNS: DUCT SMOKE DETECTION AND SPACE SMOKE DETECTION SHALL DE-ENERGIZE THE SUPPLY FAN AND CLOSE THE OUTSIDE AIR AND RELIEF AIR DAMPERS. MANUAL RESET OF THE TRIPPED DEVICE SHALL BE REQUIRED TO RESTART THE SYSTEM.

H. POWER FAIL RESTART: WHEN THE DDC SYSTEM DETECTS A LOSS OF POWER OF SUFFICIENT DURATION TO TAKE OPERATING EQUIPMENT OFF LINE, THE SYSTEM SHALL COMMAND ALL LOADS OFF. WHEN POWER HAS RETURNED (GENERATOR OR UTILITY) AND HAS BEEN STABLE FOR 30 SECONDS, THE DDC SYSTEM SHALL BEGIN TO RESTART THE BUILDING SYSTEMS. LOADS SHALL BE STARTED SEQUENTIALLY WITH 15-SECOND (ADJUSTABLE) TIME DELAYS BETWEEN THE START OF EACH LOAD. THE SEQUENCE AND TIME INTERVAL OF RESTARTING LOADS SHALL BE FULLY SELECTABLE.

SEQUENCE OF OPERATION: HEAT PUMP CIRCULATION LOOP

A. THE HEAT PUMP CIRCULATING PUMP (CWCP-1) SHALL OPERATE CONTINUOUSLY WHENEVER THE HEAT PUMP AIR HANDLER IS IN HEATING OR COOLING MODE.

B. THE BAS SHALL MODULATE THE HEAT PUMP LOOP CONTROL VALVE TO MAINTAIN HEAT PUMP LOOP TEMPERATURE AS FOLLOWS:
   B.A. HEATING MODE - VALVE SHALL MODULATE TO MAINTAIN 45 DEGREES IN THE HEAT PUMP LOOP DOWNSTREAM OF HX-1
   B.B. COOLING MODE - VALVE SHALL MODULATE TO MAINTAIN 65 DEGREES IN THE HEAT PUMP LOOP DOWNSTREAM OF HX-1

FFKR ARCHITECTS
730 Pacific Avenue · Salt Lake City, Utah 84104
O 801.521.6186 · FFKR.COM

RMH GROUP
engineering a greener future
MECHANICAL, ELECTRICAL,
INDUSTRIAL + SUSTAINABLE DESIGN
2500 West Higgins Road, Suite 1000
Lakewood Colorado 80215
Phone: 303.235.0219
Fax: 303.235.0218
RMH Group project number

© 2021
RMH GROUP

U OF U BLDG. 303 SEISMIC UPGRADE, PROJ.#22210 - C.D. PHASE 4
SALT LAKE CITY UTAH
CONSTRUCTION SET - 10-10-2022

STATE OF UTAH
JEFFREY W ESHER
10/10/2022
NO. 9799596-2202
PROFESSIONAL ENGINEER

Δ	DATE	REVISION
0	10/10/2022	CONSTRUCTION SET

PROJECT NUMBER

MECHANICAL DETAILS

M-601-4

H:\Jobs\19\19977\AutoCAD\SHEETS BY PHASE\SEISMIC UPGRADE PHA\19977_U303_M601_4_Details.dwg, 10/7/2022 10:22:33 AM, DWG To PDF.pc3
5/7/2019 11:13:15 AM

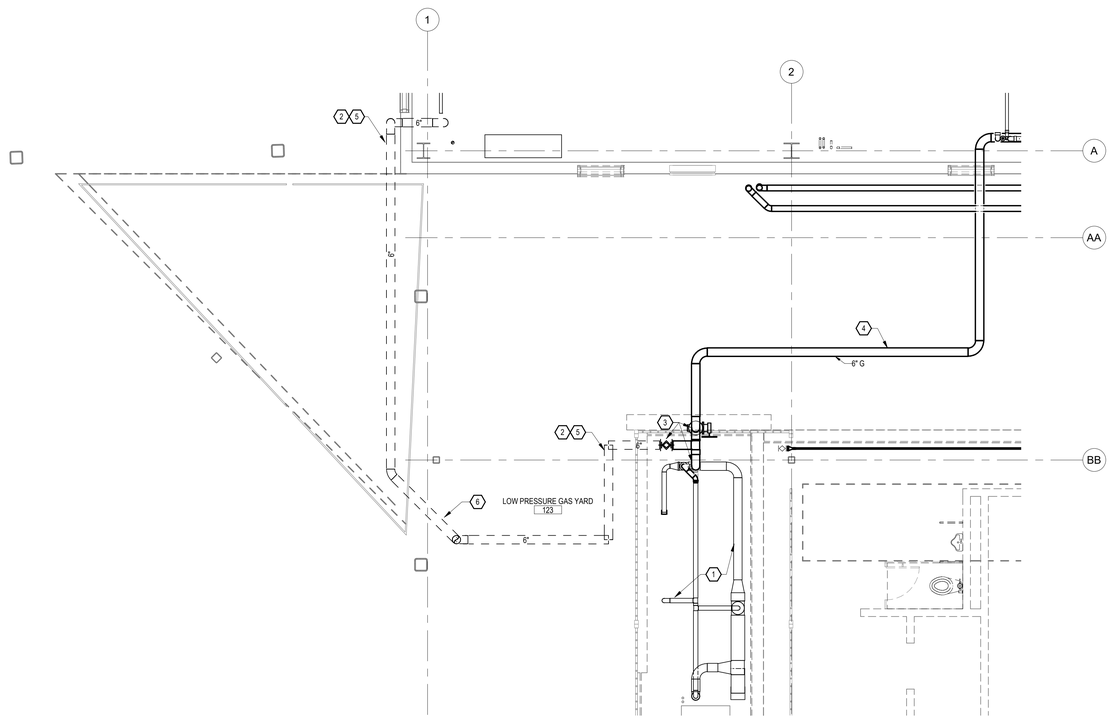

1 GAS YARD DEMOLITION AND TEMPORARY SERVICE

SCALE: 1/4" = 1'-0"

NOTE: THIS VIEW SHOWS GAS PIPING AT BOTH THE OPERATING FLOOR LEVEL AND ON THE ROOF OF THE NEW OFFICE ADDITION, WHICH IS APPROXIMATELY THE PIPING FLOOR LEVEL

PLAN NORTH

TRUE NORTH

SHEET NOTES

1. REFER TO GENERAL NOTES ON COVER SHEET.
2. REFER TO SHEET M601 FOR PLUMBING WASTE AND VENT ISOMETRIC

KEY NOTES

1. LOW PRESSURE GAS YARD SHALL REMAIN ACTIVE THROUGHOUT CONSTRUCTION. EXCEPT FOR A SINGLE OUTAGE. DURING THE OUTAGE THE COGENERATION HEAT RECOVERY UNIT WILL BE THE ONLY HEAT SOURCE AVAILABLE. COORDINATE THE OUTAGE TIMING WITH PLANT OPERATORS SUCH THAT OUTAGE OCCURS DURING A PERIOD WHERE WEATHER FORECASTS PREDICT CONDITIONS THAT ALLOW THE HEAT RECOVERY UNIT TO MEET THE LOADS. CONTRACTOR SHALL DEVELOP A METHOD OF PROCEDURE DOCUMENT FOR THE GAS LINE WORK DETAILING SCHEDULE OF WORK, OUTAGE DURATIONS, AND CONTINGENCY PLANS FOR MAINTAINING GAS SERVICE. THIS DOCUMENT MUST BE SUBMITTED AND APPROVED BEFORE BEGINNING WORK ON THIS SYSTEM.
2. INSTALL TEMPORARY GAS SERVICE BETWEEN GAS YARD AND GAS LINE IN PLANT BASEMENT AS SHOWN. INSTALL AND PRESSURE TEST PIPING BETWEEN POINTS OF CONNECTION SHOWN IN PREPARATION FOR CHANGE OVER FROM EXISTING SERVICE
3. DEMOLISH TEE TO BELOW GRADE PIPING, DEMOLISH A PORTION OF BYPASS LINE TO MAKE ROOM FOR NEW PIPING. PROVIDE NEW 6" PIPING WITH TWO NEW 6" VALVES, ONE TO TEMPORARY LINE AND ONE TO PERMANENT LINE. PREFABRICATE PIPING SECTIONS TO MINIMIZE OUTAGE TIME.
4. CONSTRUCT PERMANENT SERVICE, CONNECTING TO EXISTING VALVE. UP THROUGH SOFFIT AND ACROSS ROOF OF NEW OFFICE AREA AND INTO PLANT.
5. DEMOLISH TEMPORARY SERVICE ONCE PERMANENT SERVICE IS ACTIVE.
6. ROUTE TEMPORARY SERVICE ABOVE NEW WALLS AND THROUGH EXISTING BUTTRESS STRUCTURE. COORDINATE WITH REQUIREMENTS OF CONSTRUCTION ACTIVITIES OF ALL TRADES. PROTECT PIPING DURING CONSTRUCTION.
7. SEE VIEW 1, THIS SHEET FOR LOW PRESSURE GAS YARD DETAILS
8. 4" STORM AND OVERFLOW PIPING UP TO ROOF DRAINS ABOVE, SEE M2.02-4 FOR ROOF PLAN
9. 1-1/4" DHW, 1-1/4" DCW, ¾" DHWC UP TO LEVEL ABOVE, REFER TO M102-4 FOR CONTINUATION
10. 2" DCW DOWN, REFER TO M100-4 FOR CONTINUATION
11. DHW AND DCW DOWN TO FIXTURES, SEE SCHEDULE FOR SIZES AND ISOMETRIC DRAWING FOR WASTE AND VENT.
12. LOOP DHW INTO DHWC LINE, NO BALANCE VALVE IS REQUIRED, RECIRCULATION IS CONTROLLED AT THE CIRCULATION PUMP. SEE M101-4 FOR WATER HEATER AND CIRCULATION PUMP LOCATION.
13. PROVIDE TEMPERATURE CONTROLLED 8 WATT PER FOOT HEAT TRACE CABLE ON EXTERIOR OF PIPE EXPOSED UNDER ROOF. HEAT TRACE SHALL BE UNDER THE CONTROL OF THE BUILDING AUTOMATION SYSTEM
14. SEE PLUMBING ISOMETRIC VIEW ON SHEET P601-4 FOR WASTE LINE ROUTING BELOW BUILDING SLAB
15. NEW 6" LOW PRESSURE (25 PSI) NATURAL GAS SERVICE, ROUTE FROM LOW PRESSURE GAS YARD THROUGH SOFFIT ONTO ROOF AND INTO PLANT BELOW WINDOW AND THEN DOWN TO CONNECT TO EXISTING PIPING IN BASEMENT, SEE P201-4 FOR CONTINUATION.
16. NEW 3/4" LOW PRESSURE (14" W.C.) NATURAL GAS LINE, ROUTE FROM LOW PRESSURE GAS YARD TO NATURAL GAS WALL OUTLET ALONG ROOF AND EXTERIOR OF PLANT WALL

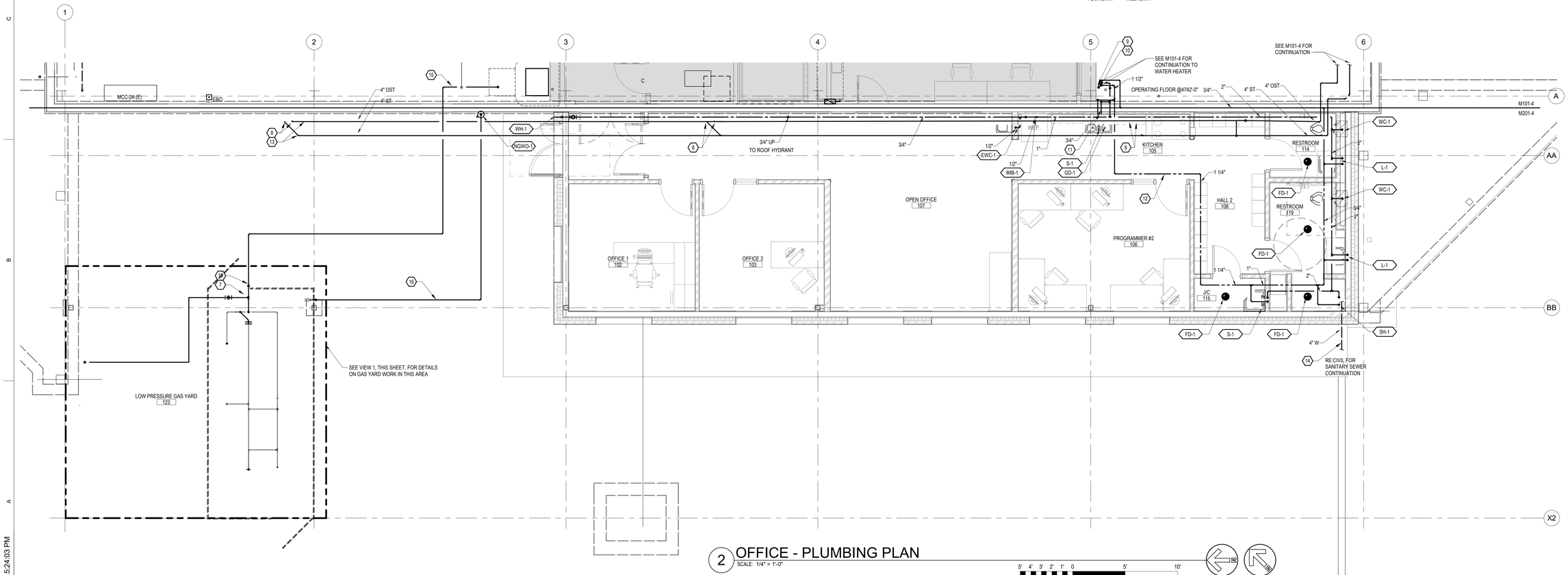

2 OFFICE - PLUMBING PLAN

SCALE: 1/4" = 1'-0"

5' 4' 3' 2' 1' 0 5' 10'

SCALE: 1/4" = 1'-0"

PLAN NORTH

TRUE NORTH

FFKR ARCHITECTS
730 Pacific Avenue · Salt Lake City, Utah 84104
O 801.521.6186 · FFKR.COM

RMH GROUP
engineering + greener future
MECHANICAL · ELECTRICAL
INDUSTRIAL + SUSTAINABLE DESIGN
12600 West Colfax Avenue
Lakewood, Colorado 80215
Phone 303.239.0909
Fax 303.239.0918
www.rmhgroup.com
RMH Group project number

© 2021
18977

U OF U BLDG. 303 SEISMIC UPGRADE, PROJ. #22436 - PHASE 4

SALT LAKE CITY UTAH

CONSTRUCTION SET - 10-10-2022

STATE OF UTAH · JEFFREY W. ELSNER · NO. 9799596-2202 · PROFESSIONAL ENGINEER
10/10/2022

	DATE	REVISION
0	10/10/2022	CONSTRUCTION SET

PROJECT NUMBER 18136

OFFICE PLUMBING PLAN

P-201-4

10/7/2022 5:24:03 PM

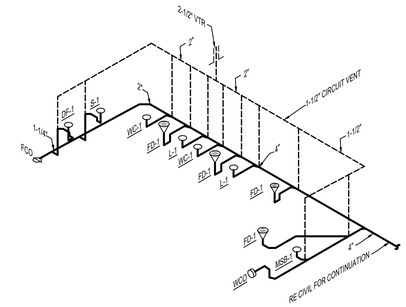

1 P601 PLUMBING WASTE AND VENT ISOMETRIC
SCALE: NONE

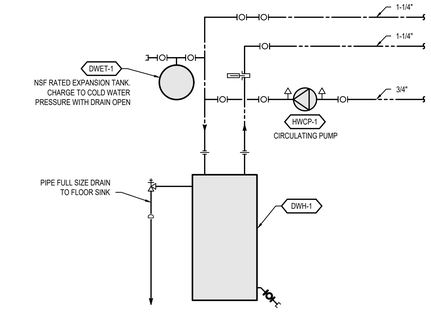

2 P-601-4 ELECTRIC WATER HEATER PIPING DIAGRAM
SCALE: NONE

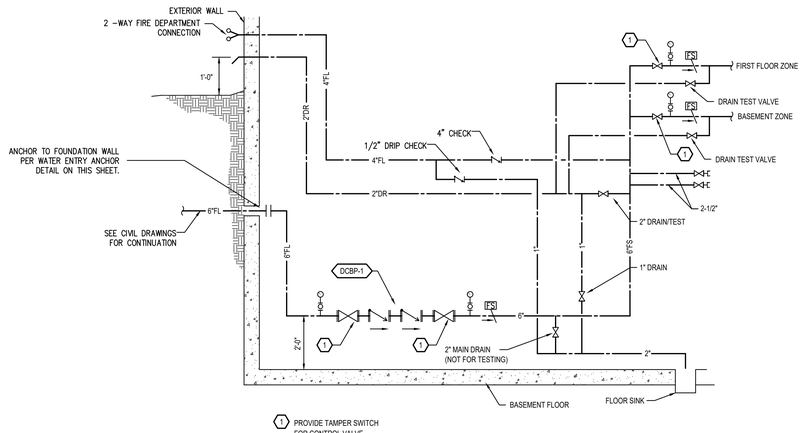

1 PROVIDE TAMPER SWITCH FOR CONTROL VALVE.

3 P-601-4 FIRE LINE ENTRANCE
NONE

NOTE: THIS DETAIL IS PROVIDED TO INDICATE LIKELY FIRE SUPPRESSION COMPONENTS
FIRE PROTECTION ENGINEER SHALL PRODUCE FINAL DESIGN

FFKR ARCHITECTS
730 Pacific Avenue · Salt Lake City, Utah 84104
O 801.521.6186 · FFKR.COM

RMH GROUP
engineering a greener future
MECHANICAL, ELECTRICAL, INDUSTRIAL + SUSTAINABLE DESIGN
12600 West Colfax Avenue
Lakewood Colorado 80215
Phone 303.238.0909
Fax 303.235.0218
www.rmhgroup.com
© 2021 RMH Group project number 19977

U OF U BLDG. 303 SEISMIC UPGRADE, PROJ.#22210 - C.D. PHASE 4
SALT LAKE CITY UTAH
CONSTRUCTION SET - 10-10-2022

STATE OF UTAH
JEFFREY W. ELSNER
10/10/2022
NO. 9799596-2202
PROFESSIONAL ENGINEER

△	DATE	REVISION
0	10/10/2022	CONSTRUCTION SET

PROJECT NUMBER

PLUMBING ISOMETRIC DRAWINGS

P-601-4

H:\Jobs19\19977\AutoCAD\SHEETS BY PHASE\SEISMIC UPGRADE PHA\19977_U303_P601_4_Details.dwg, 10/7/2022 10:21:42 AM, DWG To PDF.pc3
5/7/2019 11:13:15 AM

ELECTRICAL LEGEND (NOTE: NOT ALL SYMBOLS SHOWN ARE USED ON THESE DRAWINGS)

– ONE LINE SYMBOLS –

SYMBOL	DESCRIPTION
	CIRCUIT BREAKER
	DRAW-OUT CIRCUIT BREAKER (MOLDED INSULATED CASE)
SI	DRAW-OUT POWER CIRCUIT BREAKER
	CONTROL FUSE
	FUSE WITH SWITCH
	SWITCH
PANEL XXX	PANELBOARD
ATS-XX XXX A	AUTOMATIC TRANSFER SWITCH
100A4G	FEEDER DESIGNATION, SEE FEEDER SCHEDULE
	AUTOMATIC TRANSFER SWITCH WITH BY-PASS
E	ENGINE GENERATOR
TX-XXXX	TRANSFORMER
	ENCLOSED BUSWAY
	GROUND BUS
	WEATHERHEAD
M	MOTOR
	DELTA CONNECTION
	WYE CONNECTION
	GROUNDED WYE CONNECTION
	GROUNDED WYE CONNECTION WITH RESISTOR GROUND
	GROUNDED WYE CONNECTION WITH REACTOR GROUND
M	METERING DEVICE
	CURRENT TRANSFORMER
	POTENTIAL TRANSFORMER
	LOAD-BREAK CONNECTOR
	PROTECTIVE RELAY DEVICE
K	KEY INTERLOCK
2400V,100A, 10SEC. RESISTOR	RESISTOR
	CONTACT NORMALLY OPEN
	CONTACT NORMALLY CLOSED
	CAPACITOR
	SINGLE BATTERY
	MULTIPLE BATTERIES
	LIGHTNING ARRESTOR
	THERMAL ELEMENT, OVERLOAD RELAY

– GENERAL –

SYMBOL	DESCRIPTION
	BRANCH CIRCUIT HOME RUN TO PANELBOARD, DESIGNATION INDICATES PANEL AND CIRCUIT NUMBERS
	CONTROL WIRING
	LIGHTING, ONE-LINE, AND POWER CIRCUITING
	LIGHTING, ONE-LINE, AND POWER CIRCUITING (UNDERGROUND)
	FLEXIBLE CONDUIT
	CONDUIT BREAK SYMBOL
	CONDUIT CAP
	CONDUIT CHANGE IN ELEVATION
	CONDUIT STUB DOWN (OUT OF DRAWING LIMITS)
	CONDUIT STUB UP (OUT OF DRAWING LIMITS)
J	JUNCTION BOX
	WALL MOUNTED JUNCTION BOX
	FLOOR MOUNTED JUNCTION BOX
	PUSH BUTTON A = ABORT DA = DURESS ALARM EPO = EMERGENCY POWER OFF IC = INTERCOM ST = SHUNT TRIP
SX	SWITCH SYMBOL (#) SINGLE POLE (IF BLANK) 2 = DOUBLE POLE 3 = THREE-WAY 4 = FOUR-WAY AS = ADJUSTABLE SPEED D = DIMMER K = KEY OPERATED LV = LOW VOLTAGE M = MANUAL MOTOR SWITCH OS = OCCUPANCY SENSOR P = WITH PILOT LIGHT T = TIMER TO = THERMAL OVERLOAD VS = VACANCY SENSOR WP = WEATHERPROOF x = SMALL LETTER – LUMINAIRES CONTROLLED XP = EXPLOSION PROOF
S'S	DUAL SWITCH
$	INTERCOM SWITCH

– FIRE ALARM DEVICES –

SYMBOL	DESCRIPTION
	BELL
D	DUCT SMOKE DETECTOR
	FIRE FIGHTER'S TELEPHONE JACK
	COMBINATION FIRE HORN/STROBE LIGHT
	COMBINATION FIRE SPEAKER/STROBE LIGHT
	FIRE ALARM STROBE LIGHT
	FIRE ALARM STROBE, CEILING MOUNT
	FIRE ALARM STROBE/SPEAKER, CEILING MOUNT
	FIRE HORN
	DUAL PROJECTION FIRE HORN
	MANUAL PULL STATION
	MAGNETIC DOOR HOLD OPEN
DX	DETECTOR / DETECTOR UNDER FLOOR F = FLAME I = IONIZATION TYPE P = PHOTOELECTRIC TYPE T = THERMAL TYPE
B	BEAM DETECTOR
	PULL STATION/TELEPHONE JACK
	DELUGE VALVE

– SPECIAL SYSTEMS DEVICES –

SYMBOL	DESCRIPTION
	DATA OUTLET
	COMBINATION TELEPHONE/DATA OUTLET
	TELEPHONE OUTLET
	TELEVISION JACK
	CEILING MOUNTED DATA OUTLET
	CEILING MOUNTED TELEPHONE/DATA OUTLET
	CEILING MOUNTED TELEPHONE OUTLET
	FLOOR MOUNTED DATA OUTLET
	FLOOR MOUNTED TELEPHONE/DATA OUTLET
	FLOOR MOUNTED TELEPHONE OUTLET
TTB	TELEPHONE TERMINAL BOARD
DTB	DATA TERMINAL BOARD
M	MICROPHONE OUTLET
SX	SPEAKER V = WITH INTEGRAL VOLUME CONTROL
S	WALL MOUNTED SPEAKER
V	WALL MOUNTED VOLUME CONTROL
C	CLOCK RECEPTACLE OUTLET
	SECURITY CAMERA
T	THERMOSTAT
XX	SPECIAL SYSTEMS SYMBOLS: AB = ABORT BUTTON AMP = AMPLIFIER ANN = ANNUNCIATOR ASD = ADJUSTABLE SPEED DRIVE ATS = AUTOMATIC TRANSFER SWITCH B = BUZZER BMS = BALANCED MAGNETIC STRIP CAM = CONTROL ADDRESSABLE MODULE CH = CHIME CK = CARD READER/KEYPAD CR = CARD READER DA = DURESS ALARM PUSH-BUTTON DC = DOOR CONTACT DE = DELAYED EGRESS DMA = DOOR MANAGEMENT ALARM DO = DOOR OPERATOR DS = DOOR STRIKE DTC = DATA TERMINAL CABINET DVR = DIGITAL VIDEO RECORDER EC = ELECTRICAL CONTACTOR EL = ELECTRIC LOCK ES = ELECTRIC STRIKE F = MANUAL PULL STATION FAA = FIRE ALARM ANNUNCIATOR FACP = FIRE ALARM CONTROL PANEL FS = FLOW SWITCH FSD = FIRE SMOKE DAMPER GB = GLASSBREAK DETECTOR HC = HANDICAP PUSH-BUTTON IC = INTERCOM CALL STATION IP = INDICATOR PANEL KP = KEYPAD MAM = MONITOR ADDRESSABLE MODULE MH = MANHOLE MD = MOTORIZED DAMPER MS = MOTION SENSOR ML = MAGNETIC LOCK NCMS = NURSE CALL MASTER STATION CM-CENTRALIZED PHYSIOLOGICAL MONITORING STATION NCT = NURSE CALL TERMINAL CABINET OS = OCCUPANCY SENSOR PA = PUBLIC ADDRESS PB = PULLBOX PIR = PASSIVE INFRARED DETECTOR PM = POWER QUALITY METER PS = PRESSURE SWITCH R = REMOTE INDICATING LIGHT RT = REMOTE TEST STATION RX = REQUEST TO EXIT PUSH-BUTTON S = WALL MOUNTED SPEAKER SAP = SECURITY ALARM PANEL SPD = SURGE PROTECTIVE DEVICE TC = TIME CLOCK TS = TAMPER SWITCH VFD = VARIABLE FREQUENCY DRIVE VM = VIDEO MONITOR VS = VACANCY SENSOR

– POWER –

SYMBOL	DESCRIPTION
	DUPLEX RECEPTACLE D = DEDICATED CIRCUIT IG = ISOLATED GROUND DEVICE
GFI	GFI = GROUND FAULT CIRCUIT INTERRUPTER
	FLOOR MOUNTED DUPLEX RECEPTACLE
	FLOOR MOUNTED FOURPLEX RECEPTACLE
	FLOOR MOUNTED SPECIAL PURPOSE RECEPTACLE
	CEILING MOUNTED DUPLEX RECEPTACLE
	CEILING MOUNTED FOURPLEX RECEPTACLE
	CEILING MOUNTED SPECIAL PURPOSE RECEPTACLE
	FOURPLEX RECEPTACLE
	RANGE RECEPTACLE
	SINGLE RECEPTACLE
	SPECIAL PURPOSE RECEPTACLE
	SWITCHED RECEPTACLE
	DUPLEX EMERGENCY/CRITICAL
	FOURPLEX EMERGENCY/CRITICAL
	DUPLEX-2PORT USB
	4PORT USB
	DISCONNECT SWITCH
	FUSED DISCONNECT SWITCH
	ENCLOSED CIRCUIT BREAKER
	MOTOR STARTER
	COMBINATION MOTOR STARTER
	COMBINATION SWITCH AND RECEPTACLE
	CONDUIT SEAL OFF
	FIRE RATED POKE-THROUGH
	PARTITION CIRCUIT SPLIT
	POWER POLE
W	SURFACE RACEWAY
M	METER

– LIGHTING – (REFER TO LUMINAIRE SCHEDULE)

SYMBOL	DESCRIPTION
X, #	LUMINAIRES X = FIXTURE DESIGNATION # = BRANCH CIRCUIT NUMBER * = SWITCH LEG IDENTIFIER
	SHADING INDICATES LUMINAIRE ON LIFE SAFETY
	SHADING INDICATES PORTION OF LUMINAIRE ON LIFE SAFETY
	WALL MOUNTED LUMINAIRE
	STRIP LIGHT
	STRIP LIGHT WITH LIFE SAFETY
	POLE MOUNTED LUMINAIRE (QUANTITY OF LUMINAIRES PER POLE AS INDICATED ON PLANS)
	DOWNLIGHT LUMINAIRE
	WALL WASHER LUMINAIRE
	ADJUSTABLE LUMINAIRE
	PENDANT LUMINAIRE
	TRACK LIGHTING
P	PHOTOCELL
	EXIT LIGHT (WITH FACES AND DIRECTION ARROWS INDICATED)
	WALL MOUNTED EXIT LIGHT (WITH FACES AND DIRECTION ARROWS INDICATED)
	WALL MOUNTED BATTERY PACK EMERGENCY LIGHT

– GROUNDING SYMBOLS –

SYMBOL	DESCRIPTION
	GROUND TEST WELL
	GROUNDING CONDUCTOR
	LIGHTNING PROTECTION AIR TERMINAL
	BONDING POINT
G	GROUND BAR
	ELECTRICAL GROUND
	GROUND ROD
	GROUND ROD WITH INSPECTION TEST WELL
	PIGTAIL

– EQUIPMENT –

SYMBOL	DESCRIPTION
	DISTRIBUTION PANEL
	EXISTING DISTRIBUTION PANEL
	NEW PANEL, FLUSH MOUNTED
	EXISTING PANEL, FLUSH MOUNTED
	NEW PANEL, SURFACE MOUNTED
	EXISTING PANEL, SURFACE
T	TRANSFORMER

– ABBREVIATIONS –

(E)	EXISTING
(N)	NEW
(PART)	PARTIAL CIRCUIT
A	AMP
AC	ABOVE COUNTER TOP
AF	AMP FRAME, AMP FUSE
AFF	ABOVE FINISHED FLOOR
AFG	ABOVE FINISHED GRADE
AHJ	AUTHORITY HAVING JURISDICTION
AIC	AMPS INTERRUPTING CAPACITY
AL	ALUMINUM
APL	APPLIANCE
AS	AMP SWITCH
AT	AMP TRIP
ATS	AUTOMATIC TRANSFER SWITCH
AV	AUDIOVISUAL
BJ	BONDING JUMPER
C	CONDUIT
CB	CIRCUIT BREAKER
CCT	CIRCUIT
CCTV	CLOSED CIRCUIT T.V.
CLG	CEILING
CU	COPPER
DISC	DISCONNECT
DIST	DISTRIBUTION
E/G	ENGINE/GENERATOR
ELEC	ELECTRIC, ELECTRICAL
ELEV	ELEVATOR ELEVATION
EM	EMERGENCY
EQPT	EQUIPMENT
F	FUSE
FA	FIRE ALARM
FAA	FIRE ALARM ANNUNCIATOR
FACP	FIRE ALARM CONTROL PANEL
FIXT	FIXTURE
FO	FIBER OPTIC
FLR	FLOOR
FLUOR	FLUORESCENT
G	GROUND (EQUIPMENT)
GEN	GENERATOR
GFI	GROUND FAULT CIRCUIT INTERRUPTER
GF	GROUND FAULT PROTECTION
GND	GROUND
HC	HANDICAPPED
HG	HOSPITAL GRADE
HP	HORSEPOWER
HV	HIGH VOLTAGE
INC	INCANDESCENT
IDF	INTERMEDIATE DISTRIBUTION FRAME
IG	ISOLATED GROUND
JB	JUNCTION BOX
LED	LIGHT EMITTING DIODE
LTG	LIGHTING
LV	LOW VOLTAGE
MATV	MASTER ANTENNA T.V.
MCB	MAIN CIRCUIT BREAKER
MCC	MOTOR CONTROL CENTER
MDF	MAIN DISTRIBUTION FRAME
MH	MANHOLE
MLO	MAIN LUGS ONLY
MOP	METHOD OF PROCEDURE
MTD	MOUNTED
MTG	MOUNTING
MTR	MOTOR
MV	MEDIUM VOLTAGE
N	NEUTRAL
NC	NORMALLY CLOSED
NEC	NATIONAL ELECTRICAL CODE
NF	NON-FUSED
NIC	NOT IN CONTRACT
NL	NIGHT LIGHT
NO	NORMALLY OPEN
OHE	OVERHEAD ELECTRIC
P	POLE
PA	PUBLIC ADDRESS
PB	PULL BOX
PH	PHASE
PNL	PANEL
PWR	POWER
RCPT(S)	RECEPTACLE(S)
SBC	STRANDED BARE COPPER
SPD	SURGE PROTECTIVE DEVICE
SW	SWITCH
TEL	TELEPHONE
TP	TAMPERPROOF
TV	TELEVISION
UF	UNDERFLOOR
UNO	UNLESS NOTED OTHERWISE
UPS	UNINTERRUPTIBLE POWER SUPPLY
V	VOLTAGE
VFD	VARIABLE FREQUENCY DRIVE
VP	VAPOR PROOF
W	WIRE
WG	WIRE GUARD
WP	WEATHERPROOF
XFMR	TRANSFORMER
XP	EXPLOSION PROOF

APPLICABLE CODES

AHJ: University of Utah

FIRE AUTHORITY: University of Utah

REMODEL [X] NEW [ ]

YEAR	CODE
2018	INTERNATIONAL BUILDING CODE
2018	INTERNATIONAL MECHANICAL CODE
2018	INTERNATIONAL PLUMBING CODE
2018	INTERNATIONAL ENERGY CONSERVATION CODE
2018	INTERNATIONAL FIRE CODE
2020	NATIONAL ELECTRICAL CODE
2018	INTERNATIONAL EXISTING BUILDING CODE
2018	INTERNATIONAL RESIDENTIAL CODE
2018	INTERNATIONAL ENERGY CONSERVATION CODE

IS THE BUILDING FULLY SPRINKLERED? [ ] YES [X] NO

IS THE BUILDING FULLY DETECTED? [ ] YES [X] NO

– GRAPHIC SYMBOLS –

- 1 — KEY NOTE
- 1 — REVISION NUMBER
- 2 — DETAIL NOTE
- X — X = DENOTES ALL LUMINAIRES IN THE RESPECTIVE AREA ARE THE TYPE INDICATED, REFER TO LUMINAIRE SCHEDULE
- TAG — PANEL FLAG
- TAG — OWNER EQUIPMENT TAG
- SF X — LIGHTING CONTROL SEQUENCE INDICATION, SEE LIGHTING CONTROL SEQUENCE OF OPERATION SCHEDULE FOR INFORMATION
X = DENOTES ILLUMINATION SET POINT
- TAG — MECHANICAL EQUIPMENT TAG
- SHADING INDICATES EQUIPMENT
- HATCHING INDICATES ITEM(S) TO BE REMOVED
- A100 — ROOM NUMBER
- NORTH ARROW
- DETAIL BUBBLE
1 / E2.1 — DETAIL NUMBER
SHEET NUMBER – WHERE DETAIL IS SHOWN
- SECTION CUT
2 / E2.2 — SECTION NUMBER/LETTER
SHEET NUMBER – WHERE SECTION IS SHOWN

GENERAL NOTES

SPECIFICATIONS ARE A PART OF THE CONSTRUCTION DOCUMENTS. SHOULD ANY CONFLICT ARISE BETWEEN THE DRAWINGS AND SPECIFICATIONS, BRING SUCH CONFLICT TO THE ATTENTION OF THE ENGINEER FOR RESOLUTION. UNLESS OTHERWISE DIRECTED BY ENGINEER, THE MOST STRINGENT REQUIREMENT WILL PREVAIL.

DATA ON THE DRAWINGS IS AS EXACT AS COULD BE REASONABLY SECURED. ABSOLUTE ACCURACY IS NOT GUARANTEED. VERIFY EXACT LOCATIONS, MEASUREMENTS, LEVELS, SPACE REQUIREMENTS, POTENTIAL CONFLICTS WITH OTHER TRADES. ADAPT WORK TO ACTUAL CONDITIONS AT THE SITE. BEFORE SUBMITTING COSTS VISIT THE SITE TO BECOME THOROUGHLY FAMILIAR WITH THE ACTUAL CONDITIONS OF THIS PROJECT. THESE DRAWINGS ARE DIAGRAMMATIC IN NATURE; DO NOT SCALE. THESE DRAWINGS DO NOT SHOW MATERIALS FOR A COMPLETE INSTALLATION; PLAN THE INSTALLATION AND LAYOUT OF THE WORK AS DIAGRAMMED IN THESE DOCUMENTS. REFER TO FLOOR PLANS, SCHEMATICS AND DIAGRAMS OF OTHER TRADES FOR ELECTRICAL REQUIREMENTS. BRANCH CIRCUITS AND OTHER ELECTRICAL CONNECTIONS NOT INDICATED ON THESE DOCUMENTS.

FIRE-SEAL ALL PENETRATIONS THROUGH RATED WALLS AND FLOORS WITH MATERIALS CAPABLE OF PREVENTING THE PASSAGE OF FLAMES AND HOT GASES WHEN SUBJECTED TO THE REQUIREMENTS OF THE TEST STANDARD SPECIFIC FOR FIRE STOPS ASTM E814.

JUNCTION BOXES FOR LUMINAIRES AND OUTLETS ARE NOT INDICATED. PROVIDE THE PROPER NUMBER OF JUNCTION BOXES TO MEET LOCAL CODE AND NATIONAL ELECTRICAL CODE.

EXECUTE THE WORK IN ACCORDANCE WITH SUPPORTING OBJECTS FOR SEISMIC ZONE REQUIRED BY STATE AND LOCAL CODES ALL CEILING ATTACHED OBJECTS AND FLOOR ATTACHED EQUIPMENT INCLUDING, BUT NOT LIMITED TO: PENDANT LIGHTING FIXTURES, GENERAL LIGHTING, MULTIPLE RACEWAYS, GENERATOR, TRANSFORMER, ELECTRICAL SWITCHGEAR, SWITCHBOARDS AND OTHER ELECTRICAL EQUIPMENT.

WHERE DISCONNECTS ARE INDICATED ON DRAWINGS PROVIDE FINAL CONNECTION TO EQUIPMENT BEING SERVED BY DISCONNECT. DISCONNECTING MEANS FOR ALL MECHANICAL EQUIPMENT SHALL BE ACCESSIBLE AND HAVE THE CLEARANCE REQUIRED BY NEC.

FOR HAZARDOUS (CLASSIFIED) AREAS COMPLY WITH NFPA 70 (NEC). PROVIDE ALL REQUIRED SEAL-OFF FITTINGS WHERE CONDUITS ENTER OR LEAVE AREAS HAVING HAZARDOUS ATMOSPHERES AND AREAS OF WIDELY DIFFERENT TEMPERATURES OR HUMIDITY. PROVIDE ENCLOSURES, CONDUIT FITTINGS AND METAL CONDUIT FOR HAZARDOUS (CLASSIFIED) LOCATIONS IN COMPLIANCE WITH UL 913, ANSI/UL 121201, ANSI/UL 122701, ANSI/NFPA 496, AND UL 1203.

UP-TO-DATE ELECTRICAL RECORD DRAWINGS ARE NOT AVAILABLE FOR THIS PROJECT. INFORMATION FOR EXISTING CIRCUITRY IS BASED ON EXISTING PANEL DIRECTORIES, AVAILABLE DRAWINGS, AND ASSUMPTIONS. LOCATIONS AND INFORMATION FOR EXISTING ELECTRICAL DEVICES AND EQUIPMENT SHOWN ON THESE DOCUMENTS ARE APPROXIMATE AND WERE DERIVED FROM FIELD OBSERVATION AND AVAILABLE RECORD DRAWINGS. VERIFY ACTUAL FIELD CONDITIONS PRIOR TO STARTING WORK.

REV: 09/26/2019
COPYRIGHT, THE RMH GROUP, INC. 2021

FFKR ARCHITECTS
730 Pacific Avenue · Salt Lake City, Utah 84104
O 801.521.6186 · FFKR.COM

RMH GROUP
engineering a better future
MECHANICAL, ELECTRICAL
INDUSTRIAL + SUSTAINABLE DESIGN
12000 West Colfax Avenue
Lakewood, Colorado 80215
Phone 303.238.0909
Fax 303.238.0135
www.rmhgroup.com
RMH Group project number

© 2021
19977

U OF U BLDG. 303 SEISMIC UPGRADE, PROJ.#22210 - C.D. PHASE 4

SALT LAKE CITY UTAH

CONSTRUCTION SET - 10-10-2022

LICENSED PROFESSIONAL ENGINEER
No. 9788512202
DANIEL V SANDBLOM
10/10/2022
STATE OF UTAH

Δ	DATE	REVISION
0	10/10/2022	CONSTRUCTION SET

PROJECT NUMBER

ELECTRICAL LEGEND DIAGRAM

E-000-4

H:\Jobs\19\19977\AutoCAD\SHEETS BY PHASE\SEISMIC UPGRADE PH4\19977-E000-4 Electrical Legend.dwg, 10/10/2022 12:37:45 PM, Bluebeam PDF
5/7/2019 11:13:15 AM

SHEET NOTES

1. ALL EQUIPMENT IS EXISTING, NEW WORK INDICATED BY SHEET KEY NOTES.
2. COORDINATE AND SCHEDULE ALL ELECTRICAL OUTAGES AND OUTAGE TIME FRAMES WITH OWNER'S REPRESENTATIVE AT LEAST TWO WEEKS PRIOR TO OUTAGE. ACCOMPLISH ALL PREP WORK PRIOR TO OUTAGE TO MINIMIZE THE OUTAGE TIME FRAME. SUBMIT A DETAILED METHOD OF PROCEDURE (MOP) FOR ALL OUTAGES FOUR WEEKS PRIOR TO OUTAGE. PERFORM OUTAGES DURING OFF HOURS AT A TIME ACCEPTABLE BY THE OWNER SEE SHEET E-500-4 FOR OUTAGE DETAILS.
3. PROVIDE TEMPORARY POWER FOR SMALL TOOLS AND TASK LIGHTING.
4. PATCH AND PAINT ANY DAMAGED SURFACES DUE TO DEMOLITION AND CONSTRUCTION TO MATCH EXISTING CONDITIONS. SEAL ALL PENETRATIONS THROUGH RATED CEILINGS AND WALLS WITH UL LISTED SEALANTS AND FIRESTOPPING MATERIALS.
5. THESE DRAWINGS HAVE BEEN PREPARED BASED ON INFORMATION PROVIDED BY OTHERS. DATA PRESENTED ON THIS DRAWING IS AS ACCURATE AS CAN BE DETERMINED, BUT ACCURACY IS NOT GUARANTEED. WHILE THIS INFORMATION IS BELIEVED TO BE RELIABLE, THE ENGINEER IS NEITHER RESPONSIBLE FOR ITS ACCURACY, NOR ERRORS NOR OMISSIONS WHICH MAY HAVE BEEN INCORPORATED INTO THESE DOCUMENTS. FIELD VERIFICATION OF ALL AFFECTED COMPONENTS IS REQUIRED
6. FIRE ALARM SYSTEM CONTRACTOR SHALL FIELD INVESTIGATE, DESIGN, COORDINATE, INSTALL, PROGRAM, TEST, AND COMMISSION THE NEW FIRE ALARM SYSTEM AS DEFINED IN THE SPECIFICATIONS AND IN ACCORDANCE WITH ALL APPLICABLE CODES AND OWNER STANDARDS. PROVIDE ALL FIRE ALARM SYSTEM COMPONENTS FOR A COMPLETE SYSTEM.
7. MAINTAIN FIRE ALAM SYSTEM OPERATION IN ALL AREAS OUTSIDE OF THE AREA OF WORK DURING CONSTRUCTION.
8. ALL NEW FIRE ALARM DEVICES SHALL BE COMPATIBLE WITH THE EXISTING FIRE ALARM SYSTEM.

KEY NOTES

1. REMOVE EXISTING FEEDERS TO PANEL A. SEE SHEET ED-201-4 FOR PANEL LOCATION. SEE SHEET E-502-4 FOR PANEL SCHEDULE.
2. PROVIDE REQUIRED MONITOR AND CONTROL MODULES TO NEW FIRE ALARM SYSTEM. SEE DETAIL SHEET M-601-4 FOR FIRE PROTECTION ENTRY LAYOUT.

KEY PLAN

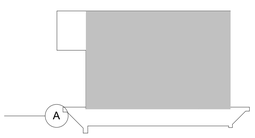

1 BASEMENT FLOOR - POWER PLAN
SCALE: 1/4" = 1'-0"

PLAN NORTH / TRUE NORTH

BASEMENT FLOOR @4730'-0"

FFKR ARCHITECTS
730 Pacific Avenue · Salt Lake City, Utah 84104
O 801.521.6186 · FFKR.COM

RMH GROUP
engineering + green future
MECHANICAL · ELECTRICAL · PLUMBING
INDUSTRIAL + SUSTAINABLE DESIGN
12500 West Colfax Avenue
Lakewood, Colorado 80215
Phone 303.239.0909
Fax 303.239.0918
www.rmhgroup.com
RMH Group project number

© 2021 RMH GROUP 18977

U OF U BLDG. 303 SEISMIC UPGRADE, PROJ. #22436 - PHASE 4

SALT LAKE CITY UTAH

CONSTRUCTION SET - 10-10-2022

LICENSED PROFESSIONAL ENGINEER
No. 9788512-2202
DANIEL V. SANDBLOM
10/10/2022
STATE OF UTAH

	DATE	REVISION
0	10/10/2022	CONSTRUCTION SET

PROJECT NUMBER 18136

BASEMENT FLOOR - POWER PLAN

E-100-4

10/10/2022 12:42:17 PM

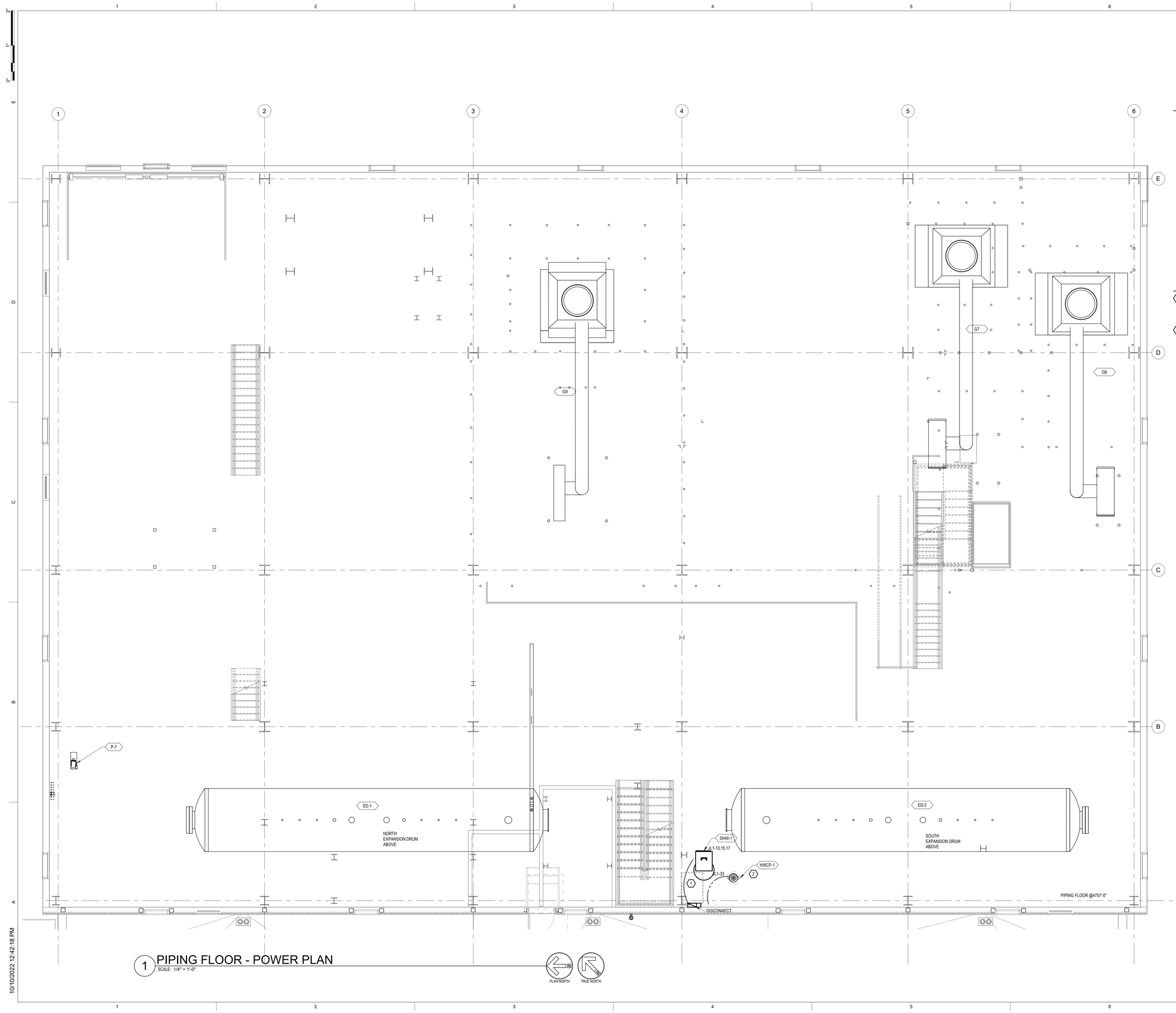

1 PIPING FLOOR - POWER PLAN

SCALE: 1/4" = 1'-0"

PLAN NORTH

TRUE NORTH

SHEET NOTES

1. LIGHT LINE WEIGHT INDICATES EXISTING (E). HEAVY LINE WEIGHT INDICATES NEW (N) CONSTRUCTION.
2. COORDINATE AND SCHEDULE ALL ELECTRICAL OUTAGES AND OUTAGE TIME FRAMES WITH OWNER'S REPRESENTATIVE AT LEAST TWO WEEKS PRIOR TO OUTAGE. ACCOMPLISH ALL PREP WORK PRIOR TO OUTAGE TO MINIMIZE THE OUTAGE TIME FRAME. SUBMIT A DETAILED METHOD OF PROCEDURE (MOP) FOR ALL OUTAGES FOUR WEEKS PRIOR TO OUTAGE. PERFORM OUTAGES DURING OFF HOURS AT A TIME ACCEPTABLE BY THE OWNER SEE SHEET E-500-4 FOR OUTAGE DETAILS.
3. PROVIDE TEMPORARY POWER FOR SMALL TOOLS AND TASK LIGHTING.
4. PATCH AND PAINT ANY DAMAGED SURFACES DUE TO DEMOLITION AND CONSTRUCTION TO MATCH EXISTING CONDITIONS. SEAL ALL PENETRATIONS THROUGH RATED CEILINGS AND WALLS WITH UL LISTED SEALANTS AND FIRESTOPPING MATERIALS.
5. THESE DRAWINGS HAVE BEEN PREPARED BASED ON INFORMATION PROVIDED BY OTHERS. DATA PRESENTED ON THIS DRAWING IS AS ACCURATE AS CAN BE DETERMINED, BUT ACCURACY IS NOT GUARANTEED. WHILE THIS INFORMATION IS BELIEVED TO BE RELIABLE, THE ENGINEER IS NEITHER RESPONSIBLE FOR ITS ACCURACY, NOR ERRORS NOR OMISSIONS WHICH MAY HAVE BEEN INCORPORATED INTO THESE DOCUMENTS. FIELD VERIFICATION OF ALL AFFECTED COMPONENTS IS REQUIRED.
6. REFER TO SHEET E-502-4 FOR PANEL SCHEDULES AND SHEET E-500-4 FOR ONELINE.

KEY NOTES

1. PROVIDE BRANCH CIRCUITS FROM NEW 208V PANEL FOR NEW EQUIPMENT, SEE EQUIPMENT SCHEDULE SHEET E-502-4 FOR BRANCH CIRCUIT AND CONDUIT SIZES AND DISCONNECT SIZE. PROVIDE THERMAL PROTECTION IN SWITCH SIZED IN ACCORDANCE WITH THE MOTOR NAMEPLATE CURRENT.
2. PROVIDE BRANCH CIRCUITS FROM NEW PANEL JL1 FOR NEW EQUIPMENT, SEE EQUIPMENT SCHEDULE SHEET E-502-4 FOR BRANCH CIRCUIT AND CONDUIT SIZES.

KEY PLAN

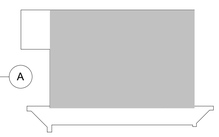

FFKR ARCHITECTS
730 Pacific Avenue · Salt Lake City, Utah 84104
O 801.521.6186 · FFKR.COM

RMH GROUP
engineering a greener future
MECHANICAL · ELECTRICAL
INDUSTRIAL · SUSTAINABLE DESIGN
12500 West Colfax Avenue
Lakewood, Colorado 80215
Phone 303.239.0909
Fax 303.239.0918
www.rmhgroup.com
RMH Group project number

© 2021
15977

U OF U BLDG. 303 SEISMIC UPGRADE, PROJ. #22436 - PHASE 4

SALT LAKE CITY UTAH

CONSTRUCTION SET - 10-10-2022

LICENSED PROFESSIONAL ENGINEER
No. 9788512-2202
DANIEL V SANDBLOM
10/10/2022
STATE OF UTAH

	DATE	REVISION
0	10/10/2022	CONSTRUCTION SET

PROJECT NUMBER 18136

PIPING FLOOR - POWER PLAN

E-102-4

10/10/2022 12:42:18 PM

SHEET NOTES

1. LIGHT LINE WEIGHT INDICATES EXISTING (E). HEAVY LINE WEIGHT INDICATES NEW (N) CONSTRUCTION.
2. COORDINATE AND SCHEDULE ALL ELECTRICAL OUTAGES AND OUTAGE TIME FRAMES WITH OWNER'S REPRESENTATIVE AT LEAST TWO WEEKS PRIOR TO OUTAGE. ACCOMPLISH ALL PREP WORK PRIOR TO OUTAGE TO MINIMIZE THE OUTAGE TIME FRAME. SUBMIT A DETAILED METHOD OF PROCEDURE (MOP) FOR ALL OUTAGES FOUR WEEKS PRIOR TO OUTAGE. PERFORM OUTAGES DURING OFF HOURS AT A TIME ACCEPTABLE BY THE OWNER SEE SHEET E-500-4 FOR OUTAGE DETAILS.
3. PROVIDE TEMPORARY POWER FOR SMALL TOOLS AND TASK LIGHTING.
4. PATCH AND PAINT ANY DAMAGED SURFACES DUE TO DEMOLITION AND CONSTRUCTION TO MATCH EXISTING CONDITIONS. SEAL ALL PENETRATIONS THROUGH RATED CEILINGS AND WALLS WITH UL LISTED SEALANTS AND FIRESTOPPING MATERIALS.
5. THESE DRAWINGS HAVE BEEN PREPARED BASED ON INFORMATION PROVIDED BY OTHERS. DATA PRESENTED ON THIS DRAWING IS AS ACCURATE AS CAN BE DETERMINED, BUT ACCURACY IS NOT GUARANTEED. WHILE THIS INFORMATION IS BELIEVED TO BE RELIABLE, THE ENGINEER IS NEITHER RESPONSIBLE FOR ITS ACCURACY, NOR ERRORS NOR OMISSIONS WHICH MAY HAVE BEEN INCORPORATED INTO THESE DOCUMENTS. FIELD VERIFICATION OF ALL AFFECTED COMPONENTS IS REQUIRED.
6. REFER TO SHEET E-502-4 FOR PANEL SCHEDULES AND SHEET E-500-4 AND E-501-4 FOR ONELINE AND SHEET E-503-5 FOR DATA OUTLET DETAILS.
7. TELECOMMUNICATION WIRING AND CABLES WILL BE INSTALLER BY UNIVERSITY OF UTAH PERSONNEL. COORDINATE INSTALLATION ACTIVITIES WITH THE UNIVERSITY TO ALLOW WIRING TO BE COMPLETED PRIOR TO THE INSTALLATION OF THE DROP CEILING GRID.
8. PROVIDE FIRE DETECTION AND ALARM THROUGHOUT THE NEW BUILDING SECTION, INCLUDING THE CONTROL ROOM AND PROGRAMMERS ROOM.
9. DATA CABLE PATHWAYS TO MAINTAIN A DISTANCE OF 12-INCHES FROM THE CONDUIT AND CABLES USED FOR POWER. CLOSER DISTANCE IS ACCEPTABLE IF PATHWAYS CROSS PERPENDICULAR TO EACH OTHER.
10. FIRE ALARM SYSTEM CONTRACTOR SHALL FIELD INVESTIGATE, DESIGN, COORDINATE, INSTALL, PROGRAM, TEST, AND COMMISSION THE NEW FIRE ALARM SYSTEM AS DEFINED IN THE SPECIFICATIONS AND IN ACCORDANCE WITH ALL APPLICABLE CODES AND OWNER STANDARDS. PROVIDE ALL FIRE ALARM SYSTEM COMPONENTS FOR A COMPLETE SYSTEM.
11. MAINTAIN FIRE ALAM SYSTEM OPERATION IN ALL AREAS OUTSIDE OF THE AREA OF WORK DURING CONSTRUCTION.
12. ALL NEW FIRE ALARM DEVICES SHALL BE COMPATIBLE WITH THE EXISTING FIRE ALARM SYSTEM.

KEY NOTES

1. PROVIDE RECESSED RECEPTACLE TO ACCOMMODATE WALL MOUNTED SCREEN.
2. PROVIDE FLOOR BOX RECEPTACLE AND TELECOM PORTS.
3. PROVIDE 1-INCH CONDUIT BELOW GRADE WITH PULLSTRING.
4. PROVIDE A 6" X 6" X 4" DEEP JUNCTION BOX FOR TELECOM CABLES. PROVIDE 1" STUB UP INTO CEILING SPACE.
5. PROVIDE NEW 480V PANEL. SEE SHEET E-500-4 FOR ONELINE AND FEEDER DETAILS.
6. PROVIDE NEW TRANSFORMER AND DISCONNECT FOR 208V PANEL FEED. SEE SHEET E-500-4 FOR ONELINE AND FEEDER DETAILS.
7. PROVIDE ONE CIRCUIT FOR RECEPTACLE AND DIGITAL SCALE MODULE.
8. PROVIDE BRANCH CIRCUITS TO NEW 480V PANEL FOR NEW EQUIPMENT, SEE SHEET E-502-4 FOR EQUIPMENT SCHEDULE FOR BRANCH CIRCUIT AND CONDUIT SIZES.
9. RUN 1-INCH UNDERGROUND CONDUIT FROM JUNCTION BOX TO OFFICE AREA FOR TELECOMMUNICATIONS. EXTEND SCALE TELECOM CONDUIT INTO OFFICE CEILING SPACE. PROVIDE RGS ELBOWS FOR UNDERGROUND CONDUIT RUN. INSTALL CONDUIT WITH A SLOPE OF 4-INCHES PER 100-FEET. CONDUIT SHALL BE CONCRETE ENCASED.
10. PROVIDE BRANCH CIRCUITS FROM NEW 208V PANEL JL1 FOR NEW EQUIPMENT, SEE SHEET E-502-4 FOR EQUIPMENT SCHEDULE FOR BRANCH CIRCUIT AND CONDUIT SIZES.
11. PROVIDE CONDUIT SLEEVES UNDER FOUNDATION TO ACCOMMODATE CONDUIT ROUTED FROM SCALE HOUSE. STUB UP INSIDE BUILDING TO FLUSH J-BOXES FOR POWER AND DATA ROUTES.
12. PROVIDE 2-#12 CONDUCTORS WITH 1#12G IN 3/4-INCH CONDUIT UNDERGROUND.
13. PROVIDE NEW 200A, 3PH NON-FUSED DISCONNECT FOR EXISTING GRILL IN THE KITCHEN. PROVIDE 1-INCH CONDUIT FROM THE NEW 208V PANEL JL1, SEE SHEET E-502-4 FOR EQUIPMENT SCHEDULE FOR CONDUCTOR DETAILS AND PANEL SCHEDULE.
14. PROVIDE 12-INCH WIDE AND 4-INCH DEEP WIRE BASKET TYPE CABLE TRAY. COORDINATE WITH OTHER DISCIPLINES TO MAINTAIN REQUIRED CLEARANCES. CABLE TRAY WILL BE DEDICATED TO TELECOM SYSTEMS. PROVIDE J-HOOKS FOR INSTALLATION SEE DETAIL 2 SHEET E600 FOR PATHWAY DETAILS.
15. PROVIDE DEVICE BOX IN CEILING SPACE WITH A SINGLE GANG DEVICE RING FOR WIRELESS ACCESS POINT.
16. MAINTAIN ADEQUATE DISTANCE BETWEEN CABLE TRAY AND MECHANICAL UNITS TO ACCOMMODATE REQUIRED CLEARANCES FOR MAINTENANCE.
17. WP JUNCTION BOX FOR HEAT TRACE WP GFI RECEPTACLE.
18. RECEPTACLE PLACED UNDER NEW SINK FOR GARBAGE DISPOSAL APPLIANCE WITH SWITCH LOCATED ABOVE THE COUNTER SPACE.
19. LINE UP CABLE TRAY WITH 4-INCH CONDUIT SLEEVES TO BOTH PROGRAMMERS' ROOMS FOR TELECOM CABLE ROUTE FROM CABLE TRAY IN THE HALLWAY TO THE CABLE TRAY IN THE PROGRAMMER ROOM.
20. COORDINATE RECEPTACLE EXACT LOCATIONS WITH ARCHITECTURAL ELEMENTS.
21. CONDUIT ROUTED ALONG EXISITNG CURB TO BE PRESERVED AND PROTECTED FOR FUTURE USE.
22. PROVIDE NEW 208V PANELS. MOUNT IN WALL WITH 6-INCH METALLIC STUDS. SEE SHEET E-500-4 FOR ONELINE DETAILS AND SHEET E-502-4 FOR PANEL SCHEDULES.

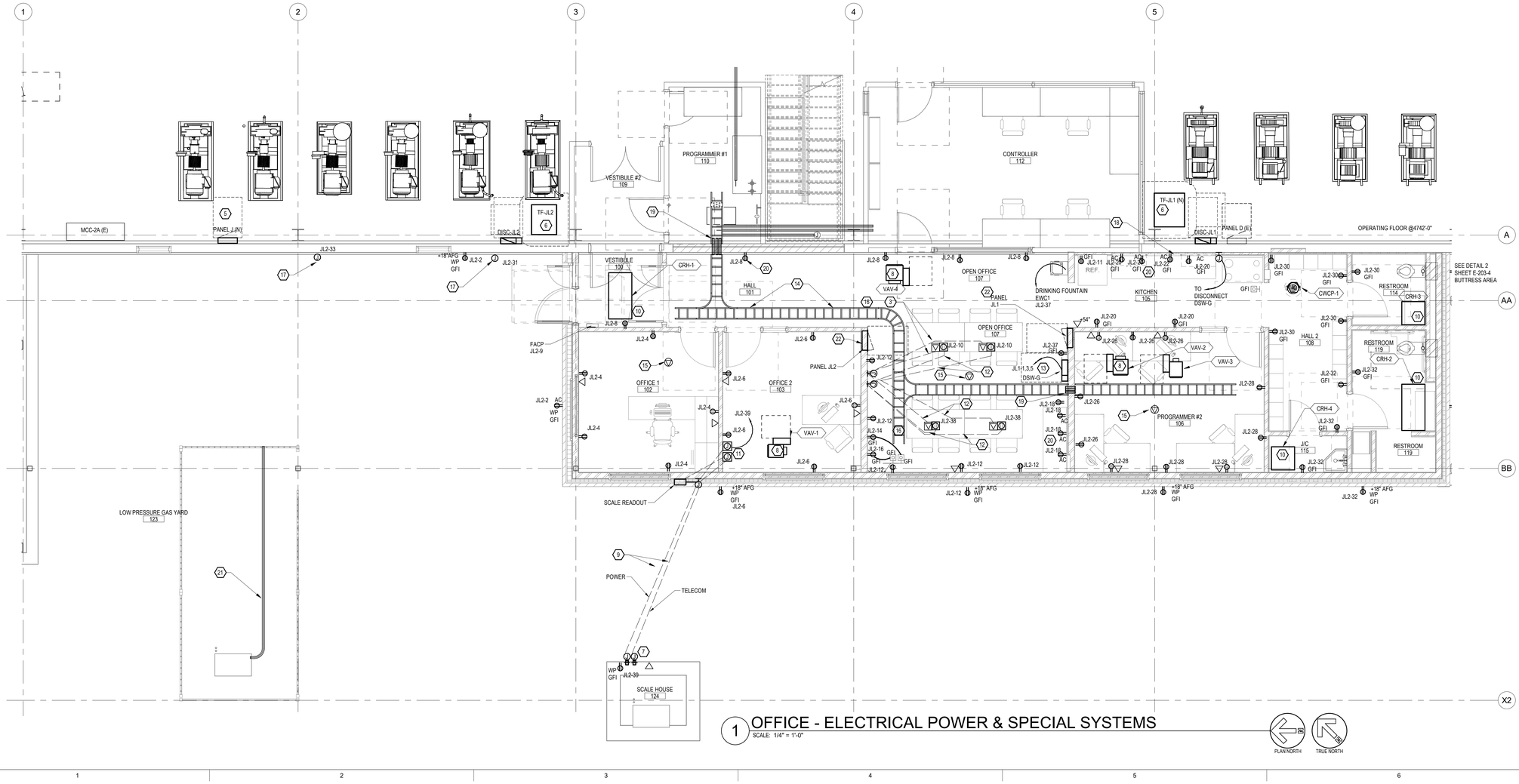

1 OFFICE - ELECTRICAL POWER & SPECIAL SYSTEMS
SCALE: 1/4" = 1'-0"

PLAN NORTH
TRUE NORTH

KEY PLAN

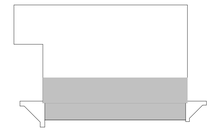

FFKR ARCHITECTS
730 Pacific Avenue · Salt Lake City, Utah 84104
O 801.521.6186 · FFKR.COM

RMH GROUP
engineering a greener future
MECHANICAL · ELECTRICAL
INDUSTRIAL · SUSTAINABLE DESIGN
RMH Group, Inc.
12500 West Colfax Avenue
Lakewood, Colorado 80215
Phone 303.239.0909
Fax 303.239.0918
www.rmhgroup.com
RMH Group project number 18977

© 2021

U OF U BLDG. 303 SEISMIC UPGRADE, PROJ. #22436 - PHASE 4
SALT LAKE CITY UTAH
CONSTRUCTION SET - 10-10-2022

LICENSED PROFESSIONAL ENGINEER
No. 9795512-2202
DANIEL V SANDBLOM
10/10/2022
STATE OF UTAH

	DATE	REVISION
0	10/10/2022	CONSTRUCTION SET

PROJECT NUMBER 18136

OFFICE - ELECTRICAL POWER & SPECIAL SYSTEMS

E-201-4

10/10/2022 12:42:19 PM

SHEET NOTES

1. LIGHT LINE WEIGHT INDICATES EXISTING (E). HEAVY LINE WEIGHT INDICATES NEW (N) CONSTRUCTION.
2. REFER TO SHEET E-502.4 FOR PANEL SCHEDULES.

KEY NOTES

1. PROVIDE CONDUITS FOR BRANCH CIRCUITS TO NEW PANEL JL1, SEE SHEET E-201.4 FOR PANEL LOCATION AND SHEET E-502.4 FOR EQUIPMENT SCHEDULE FOR CONDUIT AND BRANCH CIRCUIT SIZES.
2. PROVIDE GFI WEATHER PROOF RECEPTACLE.
3. PROVIDE BRANCH CIRCUIT TO NEW 480V PANEL, SEE DETAIL 3 SHEET E-201-4 FOR PANEL LOCATION AND SHEET E-502-4 FOR EQUIPMENT AND PANEL SCHEDULES FOR BRANCH CIRCUIT AND CONDUIT SIZE.

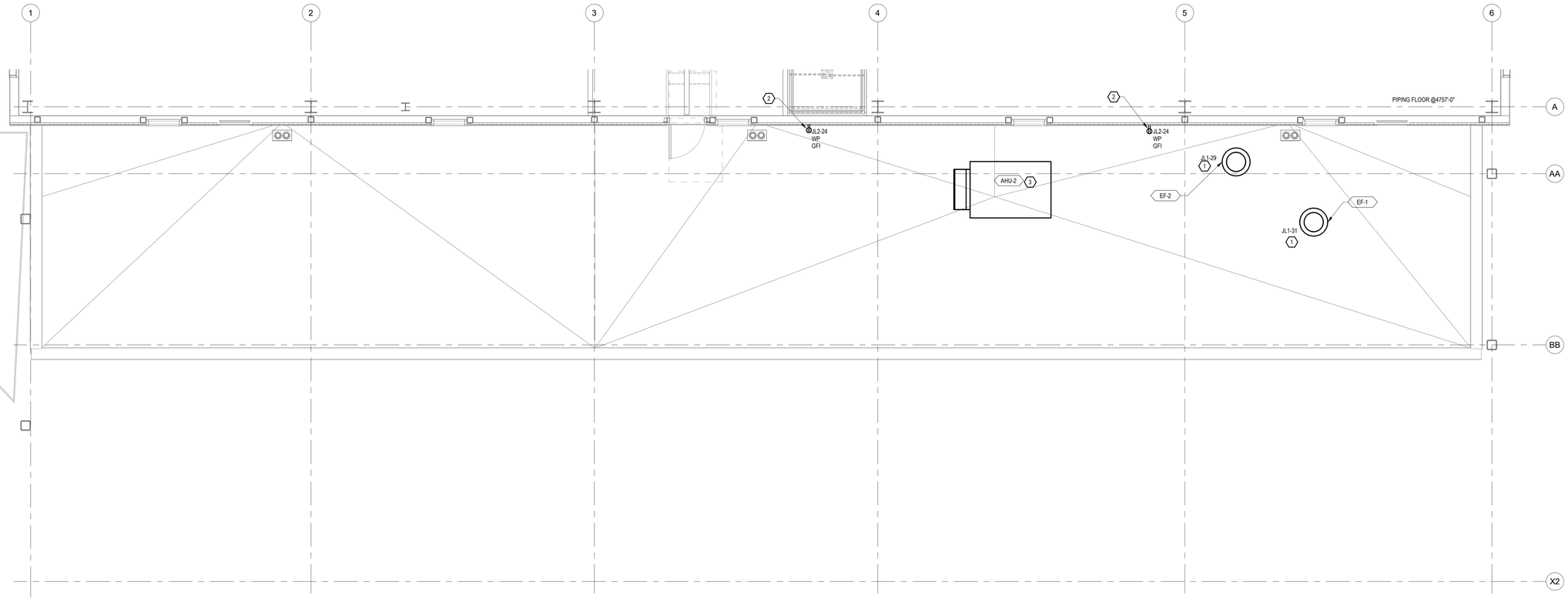

1 OFFICE - ELECTRICAL ROOF PLAN
SCALE: 1/4" = 1'-0"

5' 4' 3' 2' 1' 0 5' 10'
SCALE: 1/4" = 1'-0"

PLAN NORTH TRUE NORTH

KEY PLAN



FFKR ARCHITECTS
730 Pacific Avenue · Salt Lake City, Utah 84104
O 801.521.6186 · FFKR.COM

RMH GROUP
engineering a greener future
MECHANICAL · ELECTRICAL
INDUSTRIAL + SUSTAINABLE DESIGN
12500 West Colfax Avenue
Lakewood, Colorado 80215
Phone 303.239.0909
Fax 303.232.0538
www.rmhgroup.com
RMH Group project number

© 2021
15977

U OF U BLDG. 303 SEISMIC UPGRADE, PROJ. #22436 - PHASE 4
SALT LAKE CITY UTAH
CONSTRUCTION SET - 10-10-2022

LICENSED PROFESSIONAL ENGINEER
No. 9788512-2202
DANIEL V SANDBLOM
10/10/2022
STATE OF UTAH

	DATE	REVISION
0	10/10/2022	CONSTRUCTION SET

PROJECT NUMBER 18136

OFFICE - ELECTRICAL ROOF PLAN

E-202-4

10/10/2022 12:42:20 PM

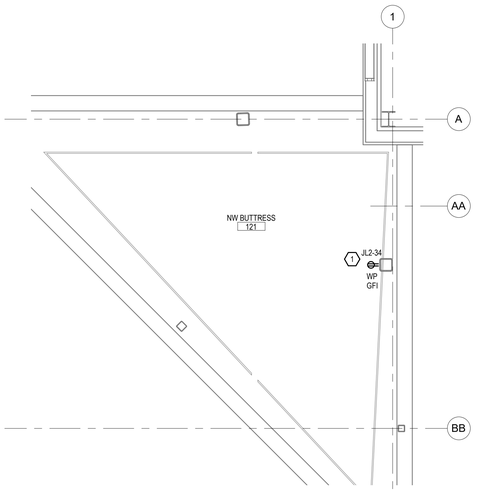

1 NW BUTTRESS ELECTRICAL PLAN
SCALE: 1/4" = 1'-0"

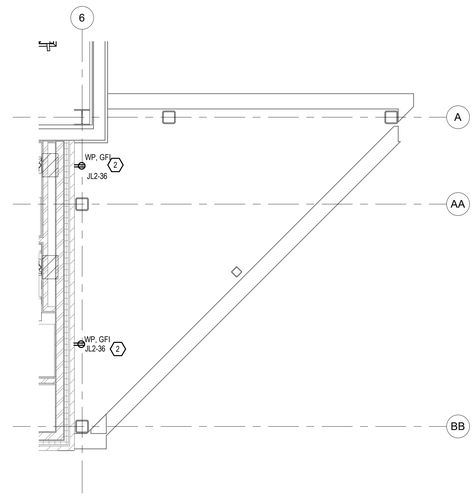

2 SW BUTTRESS - ELECTRICAL PLAN
SCALE: 1/4" = 1'-0"

SHEET NOTES

1. LIGHT LINE WEIGHT INDICATES EXISTING (E). HEAVY LINE WEIGHT INDICATES NEW (N) CONSTRUCTION.
2. COORDINATE AND SCHEDULE ALL ELECTRICAL OUTAGES AND OUTAGE TIME FRAMES WITH OWNER'S REPRESENTATIVE AT LEAST TWO WEEKS PRIOR TO OUTAGE. ACCOMPLISH ALL PREP WORK PRIOR TO OUTAGE TO MINIMIZE THE OUTAGE TIME FRAME. SUBMIT A DETAILED METHOD OF PROCEDURE (MOP) FOR ALL OUTAGES FOUR WEEKS PRIOR TO OUTAGE. PERFORM OUTAGES DURING OFF HOURS AT A TIME ACCEPTABLE BY THE OWNER SEE SHEET E-500-4 FOR OUTAGE DETAILS.
3. PROVIDE TEMPORARY POWER FOR SMALL TOOLS AND TASK LIGHTING.
4. PATCH AND PAINT ANY DAMAGED SURFACES DUE TO DEMOLITION AND CONSTRUCTION TO MATCH EXISTING CONDITIONS. SEAL ALL PENETRATIONS THROUGH RATED CEILINGS AND WALLS WITH UL LISTED SEALANTS AND FIRESTOPPING MATERIALS.
5. THESE DRAWINGS HAVE BEEN PREPARED BASED ON INFORMATION PROVIDED BY OTHERS. DATA PRESENTED ON THIS DRAWING IS AS ACCURATE AS CAN BE DETERMINED, BUT ACCURACY IS NOT GUARANTEED. WHILE THIS INFORMATION IS BELIEVED TO BE RELIABLE, THE ENGINEER IS NEITHER RESPONSIBLE FOR ITS ACCURACY, NOR ERRORS NOR OMISSIONS WHICH MAY HAVE BEEN INCORPORATED INTO THESE DOCUMENTS. FIELD VERIFICATION OF ALL AFFECTED COMPONENTS IS REQUIRED.
6. REFER TO SHEET E-502-4 FOR PANEL.

KEY NOTES

1. ADD RECEPTACLE TO EXISTING WALL. FUTURE NW BUTTRESS AREA RM 127 NO WORK TO BE DONE THIS PHASE. MOUNT RECEPTACLE ON STRUCTURAL BEAM, PROVIDE 1-GANG WEATHER PROOF IN-USE COVER.
2. PROVIDE 1-GANG WEATHER PROOF IN-USE COVER FOR OUTDOOR RECEPTACLES.

KEY PLAN

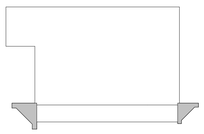

FFKR ARCHITECTS
730 Pacific Avenue · Salt Lake City, Utah 84104
O 801.521.6186 · FFKR.COM

RMH GROUP
engineering + green future
MECHANICAL + ELECTRICAL
INDUSTRIAL + SUSTAINABLE DESIGN
12600 West Colfax Avenue
Lakewood, Colorado 80215
Phone 303.239.0909
Fax 303.239.0918
www.rmhgroup.com
R&H Group project number

© 2021
15977

U OF U BLDG. 303 SEISMIC UPGRADE, PROJ. #22436 - PHASE 4
SALT LAKE CITY UTAH
CONSTRUCTION SET - 10-10-2022

LICENSED PROFESSIONAL ENGINEER
No. 9788512-2202
DANIEL V SANDBLOM
10/10/2022
STATE OF UTAH

	DATE	REVISION
0	10/10/2022	CONSTRUCTION SET

PROJECT NUMBER 18136

BUTTRESS ELECTRICAL PLAN

E-203-4

10/10/2022 12:42:22 PM

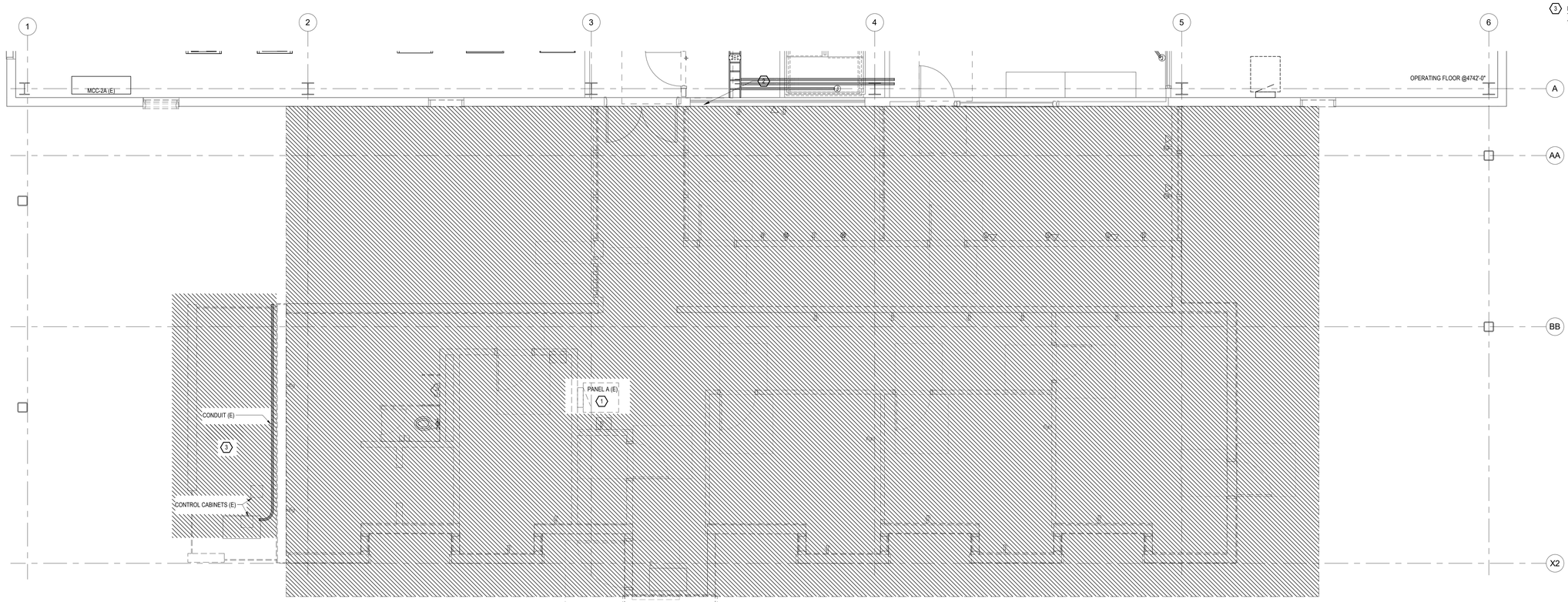

1 OFFICE - ELECTRICAL DEMOLITION PLAN

SCALE: 1/4" = 1'-0"

5' 4' 3' 2' 1' 0 5' 10'

SCALE: 1/4" = 1'-0"

PLAN NORTH

TRUE NORTH

SHEET NOTES

1. ALL ELECTRICAL EQUIPMENT IS EXISTING, HATCHING INDICATES REMOVAL OF EQUIPMENT AND DEVICES.
2. COORDINATE AND SCHEDULE ALL ELECTRICAL OUTAGES AND OUTAGE TIME FRAMES WITH OWNER'S REPRESENTATIVE AT LEAST TWO WEEKS PRIOR TO OUTAGE. ACCOMPLISH ALL PREP WORK PRIOR TO OUTAGE TO MINIMIZE THE OUTAGE TIME FRAME. SUBMIT A DETAILED METHOD OF PROCEDURE (MOP) FOR ALL OUTAGES FOUR WEEKS PRIOR TO OUTAGE. PERFORM OUTAGES DURING OFF HOURS AT A TIME ACCEPTABLE BY THE OWNER SEE SHEET E-500-4 FOR OUTAGE DETAILS.
3. PROVIDE TEMPORARY POWER FOR SMALL TOOLS AND TASK LIGHTING.
4. PATCH AND PAINT ANY DAMAGED SURFACES DUE TO DEMOLITION AND CONSTRUCTION TO MATCH EXISTING CONDITIONS. SEAL ALL PENETRATIONS THROUGH RATED CEILINGS AND WALLS WITH UL LISTED SEALANTS AND FIRESTOPPING MATERIALS.
5. THESE DRAWINGS HAVE BEEN PREPARED BASED ON INFORMATION PROVIDED BY OTHERS. DATA PRESENTED ON THIS DRAWING IS AS ACCURATE AS CAN BE DETERMINED, BUT ACCURACY IS NOT GUARANTEED. WHILE THIS INFORMATION IS BELIEVED TO BE RELIABLE, THE ENGINEER IS NEITHER RESPONSIBLE FOR ITS ACCURACY, NOR ERRORS NOR OMISSIONS WHICH MAY HAVE BEEN INCORPORATED INTO THESE DOCUMENTS. FIELD VERIFICATION OF ALL AFFECTED COMPONENTS IS REQUIRED.
6. REFER TO SHEET E-502-4 FOR PANEL SCHEDULES AND SHEET E-500-4 AND E-501-4 FOR ONELINE AND REMOVAL DETAILS.

KEY NOTES

1. REMOVE PANEL AND EXISTING BRANCH CIRCUITS AND CONDUITS. SEE SHEET E-502-4 FOR PANEL SCHEDULE.
2. HATCHING INDICATES REMOVAL OF ALL EXISTING LIGHT FIXTURES, LIGHTING CONTROL DEVICES, EMERGENCY LIGHTING UNITS, RECEPTACLES, TELECOM OUTLETS AND ASSOCIATED CONDUIT AND WIRE BACK TO SOURCE PANEL. NOT ALL FIXTURES OR ELECTRICAL DEVICES MAY BE SHOWN, BUT THE DESIGN INTENT IS FOR ALL ELECTRICAL COMPONENTS IN THIS AREA ARE TO BE REMOVED. REFER TO SHEET EL-201-4 FOR NEW LIGHTING AND NEW SWITCH DETAILS AND E-201-4 FOR NEW PANEL AND RECEPTACLE DETAILS.
3. REMOVE ALL DATA AND POWER CIRCUITS FROM THE GAS YARD WHEN TEMPORARY GAS IS AVAILABLE. CONDUIT ROUTED ALONG EXISITNG CURB TO BE PRESERVED AND PROTECTED FOR FUTURE USE.

KEY PLAN

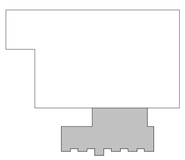

FFKR ARCHITECTS
730 Pacific Avenue · Salt Lake City, Utah 84104
O 801.521.6186 · FFKR.COM

RMH GROUP
engineering + green future
MECHANICAL + ELECTRICAL
INDUSTRIAL + SUSTAINABLE DESIGN
12600 West Colfax Avenue
Lakewood, Colorado 80215
Phone 303.239.0909
Fax 303.239.0918
www.rmhgroup.com
RMH Group project number

© 2021
19977

U OF U BLDG. 303 SEISMIC UPGRADE, PROJ. #22436 - PHASE 4

SALT LAKE CITY UTAH

CONSTRUCTION SET - 10-10-2022

LICENSED PROFESSIONAL ENGINEER
No. 9788512-2202
DANIEL V. SANDBLOM
10/10/2022
STATE OF UTAH

	DATE	REVISION
0	10/10/2022	CONSTRUCTION SET

PROJECT NUMBER 18136

OFFICE - ELECTRICAL PLAN DEMOLITION

ED-201-4

10/10/2022 12:42:23 PM

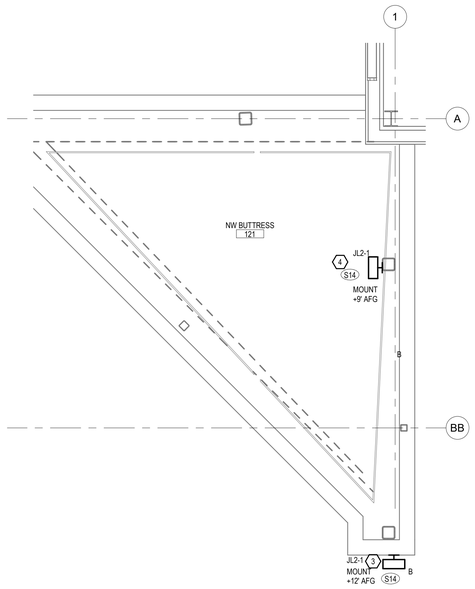

1 NW BUTTRESS - ELECTRICAL LIGHTING PLAN

SCALE: 1/4" = 1'-0"

PLAN NORTH TRUE NORTH

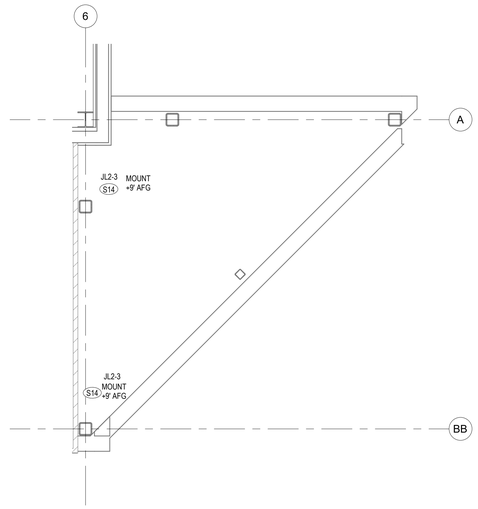

2 SW BUTTRESS - ELECTRICAL LIGHTING PLAN

SCALE: 1/4" = 1'-0"

PLAN NORTH TRUE NORTH

SHEET NOTES

1. LIGHT LINE WEIGHT INDICATES EXISTING (E). HEAVY LINE WEIGHT INDICATES NEW (N) CONSTRUCTION.
2. COORDINATE AND SCHEDULE ALL ELECTRICAL OUTAGES AND OUTAGE TIME FRAMES WITH OWNER'S REPRESENTATIVE AT LEAST TWO WEEKS PRIOR TO OUTAGE. ACCOMPLISH ALL PREP WORK PRIOR TO OUTAGE TO MINIMIZE THE OUTAGE TIME FRAME. SUBMIT A DETAILED METHOD OF PROCEDURE (MOP) FOR ALL OUTAGES FOUR WEEKS PRIOR TO OUTAGE. PERFORM OUTAGES DURING OFF HOURS AT A TIME ACCEPTABLE BY THE OWNER SEE SHEET E-500-4 FOR OUTAGE DETAILS.
3. PROVIDE TEMPORARY POWER FOR SMALL TOOLS AND TASK LIGHTING.
4. PATCH AND PAINT ANY DAMAGED SURFACES DUE TO DEMOLITION AND CONSTRUCTION TO MATCH EXISTING CONDITIONS. SEAL ALL PENETRATIONS THROUGH RATED CEILINGS AND WALLS WITH UL LISTED SEALANTS AND FIRESTOPPING MATERIALS.
5. THESE DRAWINGS HAVE BEEN PREPARED BASED ON INFORMATION PROVIDED BY OTHERS. DATA PRESENTED ON THIS DRAWING IS AS ACCURATE AS CAN BE DETERMINED; BUT ACCURACY IS NOT GUARANTEED. WHILE THIS INFORMATION IS BELIEVED TO BE RELIABLE, THE ENGINEER IS NEITHER RESPONSIBLE FOR ITS ACCURACY, NOR ERRORS NOR OMISSIONS WHICH MAY HAVE BEEN INCORPORATED INTO THESE DOCUMENTS. FIELD VERIFICATION OF ALL AFFECTED COMPONENTS IS REQUIRED.
6. REFER TO SHEET E-502-4 FOR PANEL SCHEDULES AND LUMINAIRE SCHEDULE.

KEY NOTES

1. ROUTE LIGHTING CONDUIT CONCEALED IN FLUTE OF CANOPY DECK.
2. ROUTE LIGHTING CONDUIT CONCEALED IN ROOF CANOPY COVER.
3. PROVIDE OUTDOOR LIGHT FIXTURE +12' AFG WITH STRUT SUPPORT. STRUT BE INSTALLED WITH TWO BEAM CLAMPS. PROVIDE CONDUIT TO FIXTURE FROM CIRCUIT JL2-1.
4. PROVIDE OUTDOOR LIGHT FIXTURE +9' AFG. MOUNT TO STRUCTURAL BEAM WITH TWO BEAM CLAMPS. PROVIDE CONDUIT TO FIXTURE FROM CIRCUIT JL2-1.

3 OFFICE - LIGHTING PLAN

SCALE: 1/4" = 1'-0"

PLAN NORTH TRUE NORTH

KEY PLAN

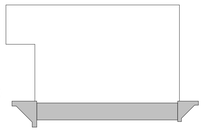

FFKR ARCHITECTS
730 Pacific Avenue · Salt Lake City, Utah 84104
O 801.521.6186 · FFKR.COM

RMH GROUP
engineering + green future
MECHANICAL · ELECTRICAL
INDUSTRIAL · SUSTAINABLE DESIGN
12600 West Colfax Avenue
Lakewood, Colorado 80215
Phone 303.239.0909
Fax 303.239.0918
www.rmhgroup.com
R&M Group project number

© 2021
RMH
19977

U OF U BLDG. 303 SEISMIC UPGRADE, PROJ. #22436 - PHASE 4

SALT LAKE CITY UTAH

CONSTRUCTION SET - 10-10-2022

LICENSED PROFESSIONAL ENGINEER
No. 9708512-2202
DANIEL V. SANDBLOM
10/10/2022
STATE OF UTAH

	DATE	REVISION
0	10/10/2022	CONSTRUCTION SET

PROJECT NUMBER 18136

OFFICE - LIGHTING PLAN

EL-201-4

10/10/2022 12:42:23 PM

SHORT CIRCUIT SCHEDULE

Fault Contributions

Utility contribution: 750 kVA, 480 V, 3 PH, 5.32% Z	16,957 A
Total system motor contribution: FLA	400 A
Total fault current from all sources	17,357 A

Point Fault Calculations

POINT	DESCRIPTION	Required Short Circuit Bracing	Short Circuit Isc SYM RMS	Line-Line Voltage V	Length of Run (Note 1)	Xfmr Rated kVA	Xfmr Imped % Z
X1	Service XFMR to COGEN MCC1	20,000	17,126	480	10	-----	-----
X2	MCC1 TO EDPHA	18,000	14,804	480	150	-----	-----
X3	EDPHA TO MDP-1B	18,000	13,103	480	150	-----	-----
X4	MDP-1A TO MCC-2A	14,000	11,783	480	140	-----	-----
X5	MCC-2A TO PANEL J	14,000	10,916	480	50	-----	-----
X6	TRANSFORMER TF-JL1 PRIMARY	14,000	9,831	480	50	-----	-----
X7	TRANSFORMER TF-JL1 SECONDARY	10,000	8,269	-----	-----	75	1.6
X8	PANEL JL1	10,000	8,145	208	10	-----	-----
X9	TRANSFORMER TF-JL2 PRIMARY	10,000	5,364	480	200	-----	-----
X10	TRANSFORMER TF-JL2 SECONDARY	10,000	4,788	-----	-----	45	1.6
X11	PANEL JL2	10,000	4,167	208	100	-----	-----

NOTES:
1. CONTRACTOR IS RESPONSIBLE FOR ALL QUANTITIES, FEEDER ROUTING AND INSTALLATION. INDICATED FEEDER LENGTH WAS USED TO CALCULATE FAULT CURRENT AND IS AN APPROXIMATE QUANTITY. IF THE INSTALLED FEEDER LENGTH IS 10% SHORTER OR LONGER THAN THE INDICATED FEEDER LENGTH

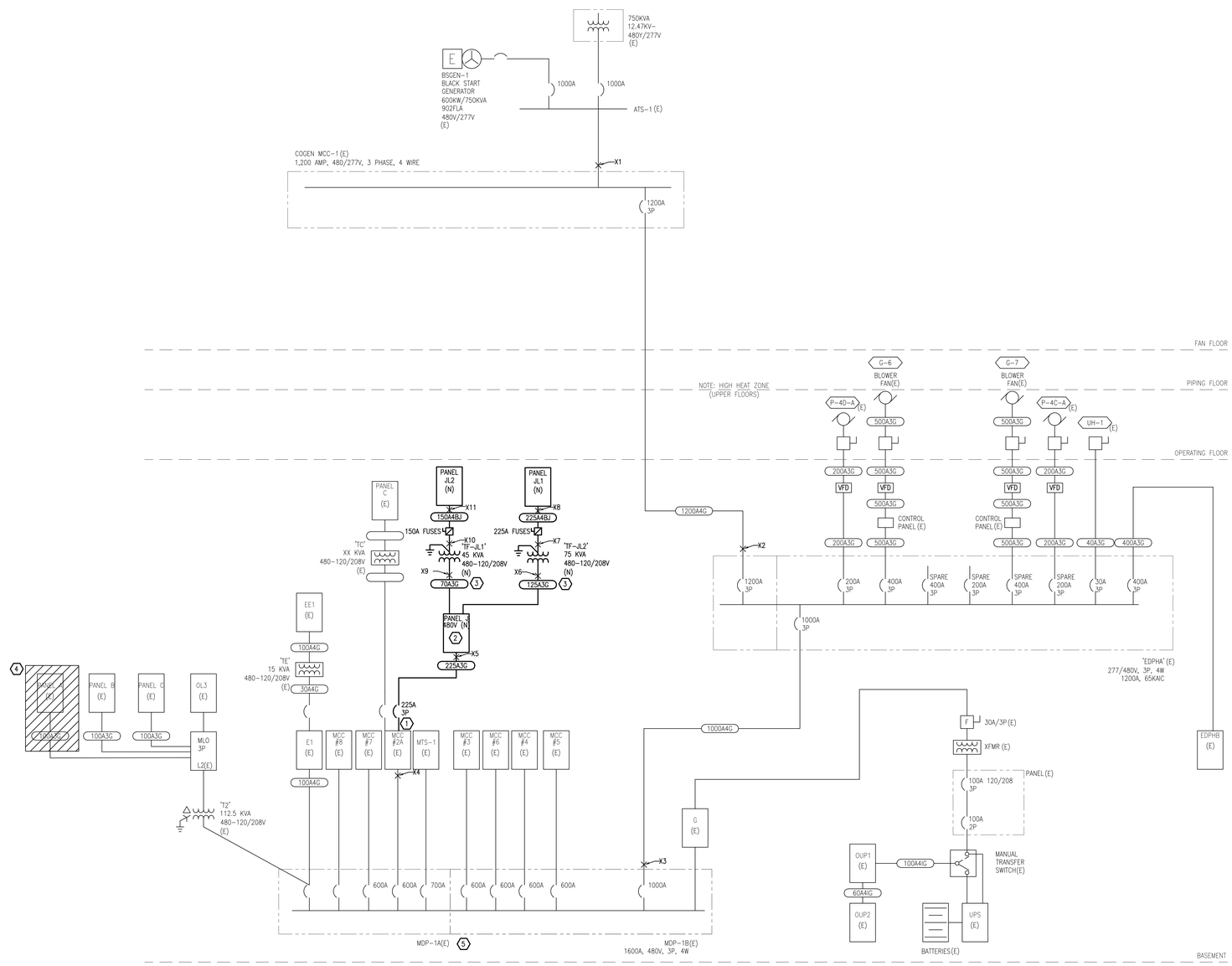

1 E506 ELECTRICAL ONELINE DIAGRAM
SCALE: NONE

SHEET NOTES

1. LIGHT LINE WEIGHT INDICATES EXISTING (E). HEAVY LINE WEIGHT INDICATES NEW(N) CONSTRUCTION.
2. COORDINATE AND SCHEDULE ALL ELECTRICAL OUTAGES AND OUTAGE TIME FRAMES WITH OWNER'S REPRESENTATIVE AT LEAST TWO WEEKS PRIOR TO OUTAGE. ACCOMPLISH ALL PREP WORK PRIOR TO OUTAGE TO MINIMIZE THE OUTAGE TIME FRAME. SUBMIT A DETAILED METHOD OF PROCEDURE (MOP) FOR ALL OUTAGES FOUR WEEKS PRIOR TO OUTAGE. PERFORM OUTAGES DURING OFF HOURS AT A TIME ACCEPTABLE BY THE OWNER
3. PROVIDE TEMPORARY POWER FOR SMALL TOOLS AND TASK LIGHTING.
4. PATCH AND PAINT ANY DAMAGED SURFACES DUE TO DEMOLITION AND CONSTRUCTION TO MATCH EXISTING CONDITIONS. SEAL ALL PENETRATIONS THROUGH RATED CEILINGS AND WALLS WITH UL LISTED SEALANTS AND FIRESTOPPING MATERIALS.
5. POWER DISTRIBUTION LUG SIZES ARE NOT INDICATED ON THIS DRAWING. ENSURE THAT ALL LUGS ARE SIZED TO ACCOMMODATE THE FEEDERS LISTED IN THE FEEDER SCHEDULE BELOW.
6. THESE DRAWINGS HAVE BEEN PREPARED BASED ON INFORMATION PROVIDED BY OTHERS. DATA PRESENTED ON THIS DRAWING IS AS ACCURATE AS CAN BE DETERMINED, BUT ACCURACY IS NOT GUARANTEED. WHILE THIS INFORMATION IS BELIEVED TO BE RELIABLE, THE ENGINEER IS NEITHER RESPONSIBLE FOR ITS ACCURACY, NOR ERRORS NOR OMISSIONS WHICH MAY HAVE BEEN INCORPORATED INTO THESE DOCUMENTS. FIELD VERIFICATION OF ALL AFFECTED COMPONENTS IS REQUIRED.
7. SWITCHGEAR SHOWN DOES NOT SHOW ALL CONNECTED LOADS.
8. REFER TO SHEET E-502-4 FOR PANEL AND MCC SCHEDULES.

KEY NOTES

1. REMOVE SPARE BREAKERS IN THE EXISTING MCC COMPARTMENT. PROVIDE NEW CIRCUIT BREAKER TO REPLACE EXISTING BREAKERS FOR NEW PANEL FEED. SEE DETAIL SHEET 3 E-201-4 FOR MCC AND PANEL LOCATION AND DETAIL 1 E-501-4 FOR MCC REMOVAL DETAILS AND DETAIL 2 E501-4 FOR NEW BREAKER MCC DETAILS.
2. PROVIDE NEW 480V PANEL, SEE SHEET E-201-4 FOR PANEL LOCATION AND E-502-4 FOR PANEL SCHEDULE.
3. PROVIDE NEW 480V FEEDER TO NEW TRANSFORMER FOR NEW 208V PANEL. SEE DETAIL 3 SHEET E-201-4 FOR EQUIPMENT LOCATION AND E-502-4 FOR PANEL SCHEDULES.
4. REMOVE PANEL AND EXISTING BRANCH CIRCUITS AND CONDUITS. SEE SHEET ED-201-4 FOR PANEL A LOCATION AND SHEET E-100-4 FOR PANEL L2 LOCATION AND SHEET E-502-4 FOR PANEL SCHEDULES.
5. PROVIDE 30 DAY PEAK METERING.

OUTAGE NOTES

CONTRACTOR SHALL COORDINATE ALL OUTAGES WITH THE OWNER IN ACCORDANCE TO CONTRACT REQUIREMENTS. IT IS ANTICIPATED THAT TWO OUTAGES WILL BE NECESSARY TO COMPLETE MODIFICATIONS TO MCC–2A.

OUTAGE 1: REPLACE SPARE BREAKERS IN THE MCC CABINET.
- CONTRACTOR SHALL COORDINATE WITH OWNER TO TEMPORARILY DE–ENERGIZE MCC–2A TO ALLOW WORK IN THE MCC.
- REPLACE SMALLER BREAKERS WITH LARGER 225 AMP TRIP UNIT. SEE KEY NOTE 1.
- PROVIDE AND INSTALL FEEDER AND CONDUIT FROM THE NEW BREAKER TO THE NEW 480V PANEL. SEE KEY NOTE 1.
- BREAKER SHALL BE TESTED BEFORE MCC IS PUT BACK INTO SERVICE.
- RETURN SPARE BREAKERS THAT HAVE BEEN REMOVED TO OWNER.

OUTAGE 2: REMOVE EXISTING PANEL A.
- CONTRACTOR SHALL COORDINATE WITH OWNER TO TEMPORARILY DE–ENERGIZE PANEL L2 TO ALLOW REMOVAL OF THE EXISTING FEEDER. SEE KEY NOTE 5.
- REMOVE EXISTING PANEL A AND TEMPORARILY TRANSFER CRITICAL LOADS TO PANEL #####

FEEDER SCHEDULE

KEY	CONDUIT & CONDUCTORS [SEE NOTE 1]	REMARKS
40A3G	3/4" C - 3#8, 1#10G	
70A3G	1" C - 3#4, 1#8G	
125A3G	1-1/2" C - 3#1/0, 1#6G	
200A3G	2" C - 3#3/0, 1#6G	
225A3G	2" C - 3#4/0, 1#4G	
500A3G	2 [2-1/2" C - 3#250, 1#2G]	
30A4G	3/4" C - 4#10, 1#10G	
100A4G	1-1/2" C - 4#1, 1#8G	
1000A4G	3 [3" C - 4#400, 1#2/0G]	
1200A4G	4 [3" C - 4#350, 1#3/0G]	
150A4BJ	2" C - 4#1/0, 1#6G	NOTE 2
225A4BJ	2-1/2" C - 4#4/0, 1#2G	NOTE 2
P40A2G	3/4" C - 2#8, 1#10G	NOTE 7
100A3G	1-1/2" C - 3#1, 1#8G	

FEEDER SCHEDULE NOTES:
1. THE NOMINAL CONDUCTOR AMPACITIES AND CONDUIT SIZES IN THIS FEEDER SCHEDULE ARE BASED ON COPPER CONDUCTORS, 60 DEGREE CENTIGRADE TERMINATIONS AND TYPE TW CONDUCTORS FOR SIZES #14 TO #1, AND 75 DEGREE CENTIGRADE TERMINATIONS AND TYPE THW CONDUCTORS FOR SIZES #1/0 AND LARGER. UNLESS NOTED OTHERWISE, CONDUIT IS SIZED BASED ON TYPE EMT CONDUIT. USE OF OTHER CONDUIT AND CONDUCTOR TYPES REQUIRES CONTRACTOR TO RE-EVALUATE CONDUCTOR AMPACITY AND CONDUIT SIZE. MODIFICATIONS MUST BE SUBMITTED FOR ENGINEER'S REVIEW AND CONFIRMATION.
2. FEEDERS MARKED WITH A "B" HAVE AN EQUIPMENT BONDING JUMPER. PROVIDE PROPERLY SIZED TERMINATIONS.
7. FEEDER KEYS MARKED WITH A "P" ARE SIZED BASED ON TYPE SCHEDULE 40 PVC CONDUIT. USE OF OTHER CONDUIT TYPES REQUIRES RESIZING OF CONDUIT.

FFKR ARCHITECTS
730 Pacific Avenue · Salt Lake City, Utah 84104
O 801.521.6186 · FFKR.COM

RMH GROUP
engineering a better future
MECHANICAL, ELECTRICAL & PLUMBING
INDUSTRIAL + SUSTAINABLE DESIGN
12000 West Colfax Avenue
Lakewood, Colorado 80215
Phone 303.239.0909
Fax 303.239.0938
www.rmhgroup.com
RMH Group project number

© 2021 19977

U OF U BLDG. 303 SEISMIC UPGRADE, PROJ.#22210 - C.D. PHASE 4
SALT LAKE CITY UTAH
CONSTRUCTION SET - 10-10-2022

LICENSED PROFESSIONAL ENGINEER
No. 9788512-2202
DANIEL V SANDBLOM
10/10/2022
STATE OF UTAH

	DATE	REVISION
0	10/10/2022	CONSTRUCTION SET

PROJECT NUMBER

ELECTRICAL ONE LINE DIAGRAM

E-500-4

H:\Jobs\19\19977\AutoCAD\SHEETS BY PHASES\SEISMIC UPGRADE PH4\19977-E500-4 Elec. One-Line.dwg, 10/10/2022 12:38:45 PM, Bluebeam PDF
5/7/2019 11:13:15 AM

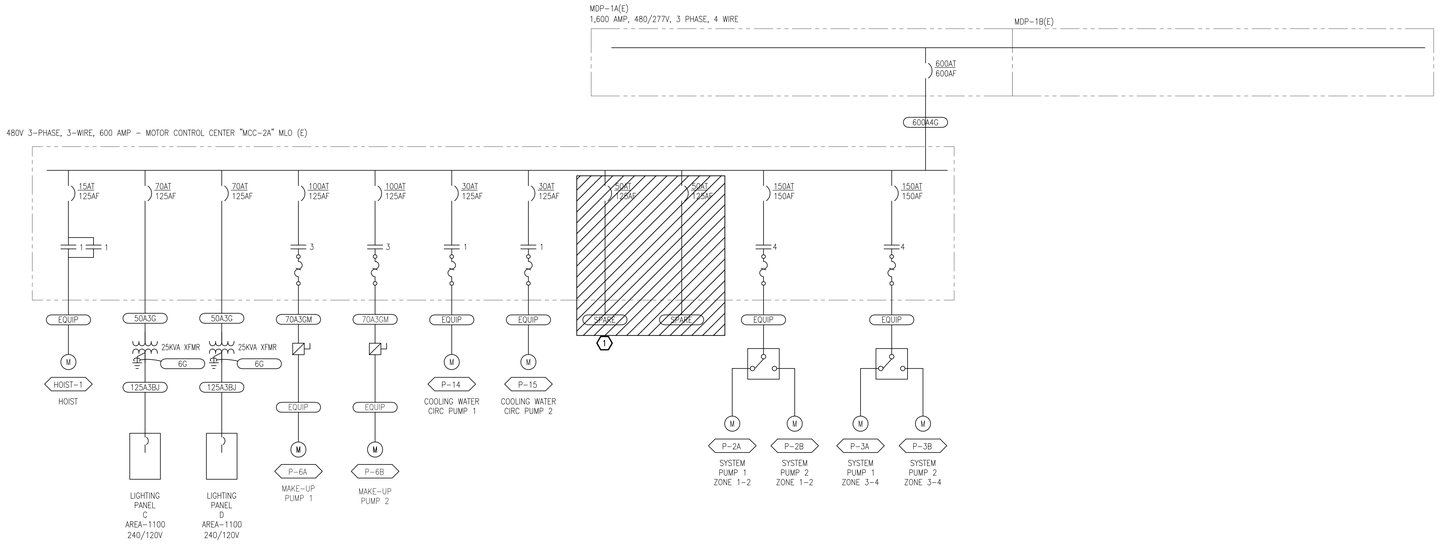

E501 **MOTOR CONTROL CENTER "MCC-2A" ONE-LINE DIAGRAM - DEMO**
SCALE: NONE

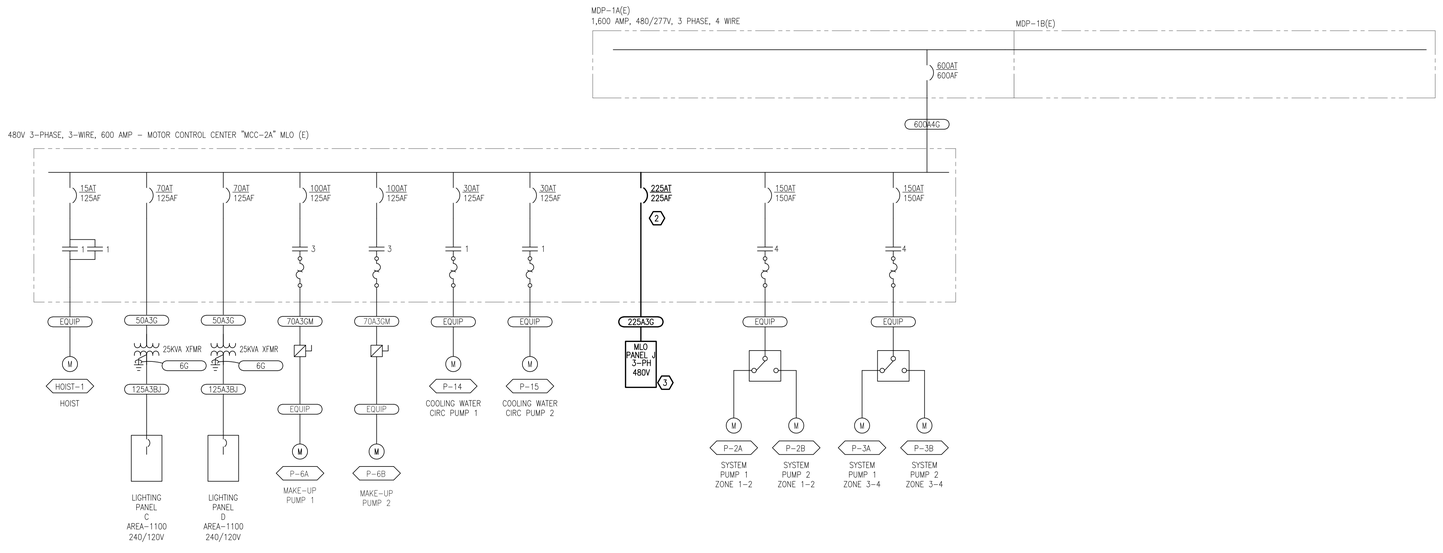

2 E501 **MOTOR CONTROL CENTER "MCC-2A" ONE-LINE DIAGRAM - NEW WORK**
SCALE: NONE

SHEET NOTES

1. LIGHT LINE WEIGHT INDICATES EXISTING (E). HEAVY LINE WEIGHT INDICATES NEW(N) CONSTRUCTION.

COORDINATE AND SCHEDULE ALL ELECTRICAL OUTAGES AND OUTAGE TIME FRAMES WITH OWNER'S REPRESENTATIVE AT LEAST TWO WEEKS PRIOR TO OUTAGE. ACCOMPLISH ALL PREP WORK PRIOR TO OUTAGE TO MINIMIZE THE OUTAGE TIME FRAME. SUBMIT A DETAILED METHOD OF PROCEDURE (MOP) FOR ALL OUTAGES FOUR WEEKS PRIOR TO OUTAGE. PERFORM OUTAGES DURING OFF HOURS AT A TIME ACCEPTABLE BY THE OWNER SEE SHEET E-500-4 FOR OUTAGE DETAILS.

2. PROVIDE TEMPORARY POWER FOR SMALL TOOLS AND TASK LIGHTING.

3. PATCH AND PAINT ANY DAMAGED SURFACES DUE TO DEMOLITION AND CONSTRUCTION TO MATCH EXISTING CONDITIONS. SEAL ALL PENETRATIONS THROUGH RATED CEILINGS AND WALLS WITH UL LISTED SEALANTS AND FIRESTOPPING MATERIALS.

4. POWER DISTRIBUTION LUG SIZES ARE NOT INDICATED ON THIS DRAWING. ENSURE THAT ALL LUGS ARE SIZED TO ACCOMMODATE THE FEEDERS LISTED IN THE FEEDER SCHEDULE BELOW.

5. THESE DRAWINGS HAVE BEEN PREPARED BASED ON INFORMATION PROVIDED BY OTHERS. DATA PRESENTED ON THIS DRAWING IS AS ACCURATE AS CAN BE DETERMINED, BUT ACCURACY IS NOT GUARANTEED. WHILE THIS INFORMATION IS BELIEVED TO BE RELIABLE, THE ENGINEER IS NEITHER RESPONSIBLE FOR ITS ACCURACY, NOR ERRORS NOR OMISSIONS WHICH MAY HAVE BEEN INCORPORATED INTO THESE DOCUMENTS. FIELD VERIFICATION OF ALL AFFECTED COMPONENTS IS REQUIRED.

6. REFER TO SHEET E-502-4 FOR PANEL SCHEDULES.

KEY NOTES

(1) REMOVE SPARE BREAKERS IN THE EXISTING MCC COMPARTMENT. SEE DETAIL 3 SHEET E-201-4 FOR MCC LOCATION AND E-502-4 FOR MCC SCHEDULE.

(2) PROVIDE NEW CIRCUIT BREAKER TO REPLACE EXISTING BREAKERS FOR NEW PANEL FEED. SEE DETAIL 3 SHEET E-201-4 FOR MCC AND PANEL LOCATION AND E-502-4 FOR ELECTRICAL SCHEDULES.

(3) PROVIDE FEEDERS TO NEW TRANSFORMER FROM NEW PANEL. SEE DETAIL 3 SHEET E-201-4 FOR LOCATION AND E-500-4 FOR FEEDER DETAILS AND E-502-4 FOR PANEL SCHEDULE AND BRANCH CIRCUIT SIZES.

FEEDER SCHEDULE

KEY	CONDUIT & CONDUCTORS [SEE NOTE 1]	REMARKS
50A3G	1" C - 3#6, 1#10G	
70A3GM	1" C - 3#4, 1#8G	NOTE 6
125A3BJ	1-1/2" C - 3#1/0, 1#6G	NOTE 2
225A3G	2" C - 3#4/0, 1#4G	

FEEDER SCHEDULE NOTES:

1. THE NOMINAL CONDUCTOR AMPACITIES AND CONDUIT SIZES IN THIS FEEDER SCHEDULE ARE BASED ON COPPER CONDUCTORS, 60 DEGREE CENTIGRADE TERMINATIONS AND TYPE TW CONDUCTORS FOR SIZES #14 TO #1, AND 75 DEGREE CENTIGRADE TERMINATIONS AND TYPE THW CONDUCTORS FOR SIZES #1/0 AND LARGER. UNLESS NOTED OTHERWISE, CONDUIT IS SIZED BASED ON TYPE EMT CONDUIT. USE OF OTHER CONDUIT AND CONDUCTOR TYPES REQUIRES CONTRACTOR TO RE-EVALUATE CONDUCTOR AMPACITY AND CONDUIT SIZE. MODIFICATIONS MUST BE SUBMITTED FOR ENGINEER'S REVIEW AND CONFIRMATION.
2. FEEDERS MARKED WITH A "BJ" HAVE AN EQUIPMENT BONDING JUMPER. PROVIDE PROPERLY SIZED TERMINATIONS.
6. FEEDER KEYS MARKED WITH A "GM" ARE FOR SINGLE MOTOR BRANCH CIRCUITS.

FFKR ARCHITECTS
730 Pacific Avenue - Salt Lake City, Utah 84104
O 801.521.6186 - FFKR.COM

RMH GROUP
MECHANICAL, ELECTRICAL & PLUMBING ENGINEERS
INDUSTRIAL + SUSTAINABLE DESIGN
12000 West Colfax Avenue
Lakewood, Colorado 80215
Phone 303.239.0909
Fax 303.239.0935
www.rmhgroup.com
RMH Group project number

© 2021
19977

U OF U BLDG. 303 SEISMIC UPGRADE, PROJ.#22210 - C.D. PHASE 4
SALT LAKE CITY UTAH
CONSTRUCTION SET - 10-10-2022

LICENSED PROFESSIONAL ENGINEER
No. 9788512-2202
DANIEL V. SANDBLOM
10/10/2022
STATE OF UTAH

	DATE	REVISION
0	10/10/2022	CONSTRUCTION SET

PROJECT NUMBER

ELECTRICAL ONE LINE DIAGRAM

E-501-4

H:\Jobs19\19977\AutoCAD\SHEETS BY PHASE\SEISMIC UPGRADE PH4\19977-E501-4 Elec. One-Line.dwg, 10/10/2022 12:41:25 PM, Bluebeam PDF
5/7/2019 11:13:15 AM

LUMINAIRE SCHEDULE

Version 1107

KEY	LAMP(S) TYPE	DESCRIPTION	FINISH	MOUNTING	SPECIFICATION (NOTE 1) MANUFACTURER	CATALOG NUMBER	VOLTS	WATTS	NOTES
A	LED	SURFACE MOUNT LINEAR LED	WHITE	SURFACE	LITHONIA	2TLX2-33L-RW-MWS-MVOLT-EZ1-LP835	120-277V	27	
B	LED	OUTDOOR WALLPACK	CLEAR	SURFACE	LITHONIA	WDGE2-P1SW-30K-80CRI-VF-SRM-E20WC DMG	120-277V	10W	WITH EMERGENCY BATTERY PACK
C	LED	CANOPY AND LOW-BAY LUMINAIRE	CLEAR	SURFACE	GOTHAM	EVO4SC-35-05-AR-MWD-LSS-MVOLT-GZ10-JBXCC-E10WCPR-DDB	120-277V	7.2W	WITH EMERGENCY BATTERY PACK
D	LED	SURFACE MOUNT LINEAR LED	WHITE	SURFACE	MARK	LCB-MSL4-80CRI-35K-1000LMF-MIN1-MVOLT-WHTT-ZT-WL	120V	37.3W	WET LOCATION RATED
DX	LED	SAME AS FIXTURE "D" BUT WITH EMERGENCY BATTERY PACK	WHITE	SURFACE	MARK	LCB-MSL4-80CRI-35K-1000LMF-MIN1-MVOLT-WHTT-E10WLCP-ZT-WL	120V	37.3W	WITH EMERGENCY BATTERY PACK
E1	LED	RECESSED 1X4 PANEL CORRIDOR LED LIGHTING SAME AS TYPE "E" WITH L40 SELECTED	WHITE	RECESSED	UTOPIA	ULP-2G-14-L40-35/40/50K-UNV-DM-PS-14-L30-35K-ARRA	120-277V	40W	DIMMABLE, 4000-LUMENS SELECTED
E	LED	RECESSED 1X4 PANEL OFFICE CONFERENCE LED LIGHTING L30	WHITE	RECESSED	UTOPIA	ULP-2G-14-L30-35K-UNV-DM-PS-14-L30-35K-ARRA	120-277V	30W	DIMMABLE 3000-LUMENS SELECTED.
EX	LED	SAME AS FIXTURE TYPE "E" BUT WITH EMERGENCY BATTERY PACK	WHITE	RECESSED	UTOPIA	ULP-2G-14-L30-35K-UNV-DM-PS-14-L30-35K-ARRA-EMI8	120-277V	30W	WITH EMERGENCY BATTERY PACK
I	LED	ROUND SHOWER LIGHT	CLEAR	RECESSED	GOTHAM	EVO4SH-35-05-DFR-SMO-MVOLT-EZ10-ELR	120/277V	7.2W	SHOWER LIGHT WITH EMERGENCY BATTERY PACK
X1	LED	LED EXIT SIGN SINGLE FACE	WHITE	MOUNTED	LITHONIA	WLTE-W-1-R-EL	1202-277V	2.7W	4.8V BATTERY

LUMINAIRE SCHEDULE NOTES:

1 COORDINATE THE VOLTAGE AND MOUNTING CONFIGURATION WITH THE PLANS.

LIGHTING CONTROL SEQUENCE OF OPERATION SCHEDULE

V_0817

KEY	DESCRIPTION	MANUAL ON, AUTO OFF	AUTO ON, AUTO OFF	TIMECLOCK ON/OFF	LOCAL SWITCHING	LOCAL OR TIMECLOCK DIMMING	OCCUPANCY SENSOR TIME DELAY	PHOTOSENSOR DIMMING	PHOTOSENSOR ON/OFF	NOTES
S5	OCCUPANCY SENSING, MAX 50% AUTO ON, LOCAL MANUAL DIMMING		X			X	20 MINUTE			DIMMING SHALL BE TO A MINIMUM OF 10%.
S6	OCCUPANCY SENSING, MAX 50% AUTO ON, LOCAL MANUAL DIMMING, DAYLIGHT HARVESTING		X			X	20 MINUTE	X		DIMMING SHALL BE TO A MINIMUM OF 10% .
S8	OCCUPANCY SENSING, AUTO ON, AUTO OFF, LOCAL MANUAL DIMMING		X			X	20 MINUTE			ALLOWED IN STAIRS, CORRIDORS, RESTROOMS, BUILDING ENTRIES AND LOBBYS OR FOR SAFETY/SECURITY. FIXTURES LABELED NL SHALL BE CONTROLLED WITH REST OF FIXTURES BUT SHALL DIM TO 30% ON VACANCY.
S14	PHOTOSENSOR AND TIMECLOCK DIMMING			X		X			X	FOR EXTERIOR LIGHTING, 30% LOAD REDUCTION FROM MIDNIGHT TO 6AM, OR FROM ONE HOUR AFTER BUILDING CLOSE TO ONE HOUR BEFORE BUILDING OPEN.

PANEL: **J (N)** VOLTAGE: 277/480 V. TYPE: PANELBOARD
3 PH 4 W. 60 HZ MOUNTING: FLUSH
FED FROM: MCC2A PANEL COVER: (SEE SPECIFICATIONS)
N/A AMP MAIN RATED AT 80% NEUTRAL BUS: YES
MLO AMP MAIN LUGS GROUND BUS: YES ISOLATED GND: NO
225 AMP BUS NOTE: 1. THIS IS A NEW PANEL
ALUMINUM BUSING 2. SERVED BY MCC2A
14000 SYMMETRICAL RMS AMPS 3. [ ]
PANEL SHORT CIRCUIT RATING 4. [ ]

NOTE	DESCRIPTION	CCT VA	BREAKER AMP / P	CCT	PH	CCT	BREAKER AMP / P	CCT VA	DESCRIPTION	NOTE
	AHU-2	5833	50 / --	1	A	2	125 / --	25000	TF-LJ1	
	AIR HANDLING UNIT	5833	-- / --	3	B	4	-- / --	25000	TRANSFORMER	
	*	5833	-- / 3	5	C	6	-- / 3	25000	*	
	SPARE	0	20 / --	7	A	8	15 / --	503	VAV 1 REHEAT	
	*	0	-- / --	9	B	10	-- / --	503	*	
	*	0	-- / 3	11	C	12	-- / 3	503	*	
	SPARE	0	20 / --	13	A	14	15 / --	667	VAV 2 REHEAT	
	*	0	-- / --	15	B	16	-- / --	667	*	
	*	0	-- / 3	17	C	18	-- / 3	667	*	
	SPARE	0	20 / --	19	A	20	15 / --	283	VAV 4 REHEAT	
	*	0	-- / --	21	B	22	-- / --	283	*	
	*	0	-- / 3	23	C	24	-- / 3	283	*	
	SPARE	0	20 / --	25	A	26	20 / --	567	CWCP-1	
	*	0	-- / --	27	B	28	-- / --	567	CIRCULATION PUMP	
	*	0	-- / 3	29	C	30	-- / 3	567	*	
	SPARE	0	20 / --	31	A	32	70 / --	15000	TF-LJ2	
	*	0	-- / --	33	B	34	-- / --	15000	TRANSFORMER	
	*	0	-- / 3	35	C	35	-- / 3	15000	*	
	SPARE	0	20 / --	37	A	38	20 / --	0	SPARE	
	*	0	-- / --	39	B	40	-- / --	0	*	
	*	0	-- / 3	41	C	42	-- / 3	0	*	

PANEL LOADING SUMMARY

LOAD TYPE	PH A	PH B	PH C	TOTAL
INCANDESCENT	0.0	0.0	0.0	0.0 kVA
INDUCTIVE LTG	0.0	0.0	0.0	0.0 kVA
RECEPTACLES	0.0	0.0	0.0	0.0 kVA
MOTORS	5.8	5.8	17.5	17.5 kVA
APPLIANCES	0.6	0.6	0.6	1.7 kVA
HEAT	1.5	1.5	1.5	4.4 kVA
COMPUTER	0.0	0.0	0.0	0.0 kVA
OTHER	40.0	40.0	40.0	120 kVA
NONCONCIDEN	0.0	0.0	0.0	0.0 kVA
PEAK LOAD	0.0	0.0	0.0	0.0 kVA
TOTAL	47.9	47.9	47.9	144 kVA

PHASE BALANCE (%)	A-B	B-C	C-A	PF
	100	100	100	85

MIN PANEL AMPACITY 197 AMPERES

NEC DEMAND LOAD SUMMARY

LOAD TYPE	kW	POWER FACT	kVA	DEMAND FACTOR	CALCULATED LOAD
INCANDESCENT	0.0	@ 100%	= 0.0	@ 125%	= 0.0 kVA
INDUCTIVE LTG	0.0	@ 95%	= 0.0	@ 125%	= 0.0 kVA
RECEPTACLES					
FIRST 10 kVA	0.0	@ 95%	= 0.0	@ 100%	= 0.0 kVA
REMAINDER	0.0	@ 95%	= 0.0	@ 50%	= - kVA
MOTORS					
LARGEST	14.0	@ 80%	= 17.5	@ 125%	= 21.9 kVA
REMAINDER	0.0	@ 80%	= 0.0	@ 100%	= 0.0 kVA
APPLIANCES	1.4	@ 80%	= 1.7	@ 100%	= 1.7 kVA
HEAT	4.4	@ 100%	= 4.4	@ 125%	= 5.5 kVA
COMPUTER	0.0	@ 95%	= 0.0	@ 100%	= 0.0 kVA
OTHER	102	@ 85%	= 120	@ 100%	= 120 kVA
NONCONCIDEN	0.0	@ 95%	= 0.0	@ 0%	= - kVA
PEAK LOAD	0.0	@ 90%	= 0.0	@ 125%	= 0.0 kVA
10 % SPARE	13.0	@ 90%	= 14.4	@ 100%	= 14.4 kVA
TOTAL	135	kW	158	kVA	164 kVA

Version 0816a

PANEL: **JL1 (N)** VOLTAGE: 120/208 V. TYPE: PANELBOARD
3 PH 4 W. 60 HZ MOUNTING: FLUSH
FED FROM: TF-JL1 PANEL COVER: FLUSH
225 AMP MAIN RATED AT 80% NEUTRAL BUS: YES
N/A AMP MAIN LUGS GROUND BUS: YES ISOLATED GND: NO
225 AMP BUS NOTE: 1. THIS IS A NEW PANEL
ALUMINUM BUSING 2. [ ]
10000 SYMMETRICAL RMS AMPS 3. [ ]
PANEL SHORT CIRCUIT RATING 4. [ ]

NOTE	DESCRIPTION	CCT VA	BREAKER AMP / P	CCT	PH	CCT	BREAKER AMP / P	CCT VA	DESCRIPTION	NOTE
	GRILL DISCONNECT	10800	110 / --	1	A	2	20 / --	0	SPARE	
		10800	-- / --	3	B	4	-- / --	0	*	
	*	10800	-- / 3	5	C	6	20 / 3	0	*	
	SPARE	0	20 / --	7	A	8	20 / 1	0	SPARE	
	*	0	-- / --	9	B	10	20 / 1		SPARE	
	*	0	-- / 3	11	C	12	20 / 1		SPARE	
	DHW-1	7733	70 / --	13	A	14	20 / 1		SPARE	
	DOMESTIC WATER HEATER	7733	-- / --	15	B	16	20 / 1		SPARE	
	*	7733	-- / 3	17	C	18	20 / 1		SPARE	
	CRH-1	500	15 / 1	19	A	20	20 / 1		SPARE	
	CRH-2	500	15 / 1	21	B	22	20 / 1		SPARE	
	CRH-3	310	15 / 1	23	C	24	20 / 1		SPARE	
	CRH-4	250	15 / 1	25	A	26	20 / 1		SPARE	
	SPARE	0	15 / 1	27	B	28	20 / 1		SPARE	
	EF-01	400	15 / 1	29	C	30	20 / 1		SPACE	
	EF-02	670	15 / 1	31	A	32			SPACE	
	HWCP-1	300	15 / 1	33	B	34			SPACE	
	SPARE	0	20 / 1	35	C	36			SPACE	
	SPACE			37	A	38			SPACE	
	SPACE			39	B	40			SPACE	
	SPACE			41	C	42			SPACE	

PANEL LOADING SUMMARY

LOAD TYPE	PH A	PH B	PH C	TOTAL
INCANDESCENT	0.0	0.0	0.0	0.0 kVA
INDUCTIVE LTG	0.0	0.0	0.0	0.0 kVA
RECEPTACLES	0.0	0.0	0.0	0.0 kVA
MOTORS	0.7	0.3	0.4	1.4 kVA
APPLIANCES	10.8	10.8	10.8	32.4 kVA
HEAT	8.5	8.2	8.0	24.8 kVA
COMPUTER	0.0	0.0	0.0	0.0 kVA
OTHER	0.0	0.0	0.0	0.0 kVA
NONCONCIDEN	0.0	0.0	0.0	0.0 kVA
PEAK LOAD	0.0	0.0	0.0	0.0 kVA
TOTAL	20.0	19.3	19.2	59.0 kVA

PHASE BALANCE (%)	A-B	B-C	C-A	PF
	96	99	96	89

MIN PANEL AMPACITY 197 AMPERES

NEC DEMAND LOAD SUMMARY

LOAD TYPE	kW	POWER FACT	kVA	DEMAND FACTOR	CALCULATED LOAD
INCANDESCENT	0.0	@ 100%	= 0.0	@ 125%	= 0.0 kVA
INDUCTIVE LTG	0.0	@ 95%	= 0.0	@ 125%	= 0.0 kVA
RECEPTACLES					
FIRST 10 kVA	0.0	@ 95%	= 0.0	@ 100%	= 0.0 kVA
REMAINDER	0.0	@ 95%	= 0.0	@ 50%	= - kVA
MOTORS					
LARGEST	0.5	@ 80%	= 0.7	@ 125%	= 0.8 kVA
REMAINDER	0.6	@ 80%	= 0.7	@ 100%	= 0.7 kVA
APPLIANCES	25.9	@ 80%	= 32.4	@ 100%	= 32.4 kVA
HEAT	24.8	@ 100%	= 24.8	@ 125%	= 31.0 kVA
COMPUTER	0.0	@ 95%	= 0.0	@ 100%	= 0.0 kVA
OTHER	0.0	@ 85%	= 0.0	@ 100%	= 0.0 kVA
NONCONCIDEN	0.0	@ 95%	= 0.0	@ 0%	= - kVA
PEAK LOAD	0.0	@ 90%	= 0.0	@ 125%	= 0.0 kVA
10 % SPARE	5.3	@ 90%	= 5.9	@ 100%	= 5.9 kVA
TOTAL	57.0	kW	64.0	kVA	70.8 kVA

Version 0816a

PANEL: **JL2 (N)** VOLTAGE: 120/208 V. TYPE: PANELBOARD
3 PH 4 W. 60 HZ MOUNTING: FLUSH
FED FROM: TF-JL2 PANEL COVER: FLUSH
150 AMP MAIN RATED AT 80% NEUTRAL BUS: YES
N/A AMP MAIN LUGS GROUND BUS: YES ISOLATED GND: NO
225 AMP BUS NOTE: 1. THIS IS A NEW PANEL
ALUMINUM BUSING 2. [ ]
10000 SYMMETRICAL RMS AMPS 3. [ ]
PANEL SHORT CIRCUIT RATING 4. [ ]

NOTE	DESCRIPTION	CCT VA	BREAKER AMP / P	CCT	PH	CCT	BREAKER AMP / P	CCT VA	DESCRIPTION	NOTE
	LTS NORTH AREA	460	20 / 1	1	A	2	20 / 1	360	RECPT OUTSIDE	
	LTS SOUTH AREA	465	20 / 1	3	B	4	20 / 1	1080	RECPT OFFICE RM 102	
	LTS OUTDOOR	61	20 / 1	5	C	6	20 / 1	1260	RECPT OFFICE RM 103	
	SPARE	0	20 / 1	7	A	8	20 / 1	900	RECPT HALLWAY 101	
	FIRE ALARM CONTROL PANEL	1400	20 / 1	9	B	10	20 / 1	720	RECPT FB RM 107	
	REFRIGERATOR	2000	20 / 1	11	C	12	20 / 1	900	RECPT OPEN OFFICE RM 107	
	SPARE	0	20 / 1	13	A	14	20 / 1	180	RECPT VEND RM 107	
	SPARE	0	20 / 1	15	B	16	20 / 1	180	RECPT VEND RM 107	
	SPARE	0	20 / 1	17	C	18	20 / 1	1080	RECPT OPEN OFFICE RM 107	
	SPARE	0	20 / --	19	A	20	20 / 1	900	RECPT KITCHEN RM 105	
	*	0	-- / --	21	B	22	20 / 1	180	RECPT KITCHEN GARBAGE RM	
	*	0	-- / 3	23	C	24	20 / 1	360	RECPT ROOF	
	SPARE	0	20 / 1	25	A	26	20 / 1	1260	RECPT PROGRAM RM 106	
	SPARE	0	20 / 1	27	B	28	20 / 1	1440	RECPT PROGRAM RM 106	
	SPARE	0	20 / 1	29	C	30	20 / 1	900	RECPT HALL REST RM 108,114	
	RECPT HEAT TRACE	360	20 / 1	31	A	32	20 / 1	900	RECPT HALL/REST/JC	
	RECPT HEAT TRACE	360	20 / 1	33	B	34	20 / 1	180	RECPT BUTTRESS NW 121	
	SPARE	0	20 / 1	35	C	36	20 / 1	360	RECPT BUTTRESS SW	
	DRINKING FOUNTAIN	370	20 / 1	37	A	38	20 / 1	720	RECPT FB RM 107	
	RECPT SCALE HOUSE	360	20 / 1	39	B	40	20 / 1	0	SPARE	
	SPARE	0	20 / 1	41	C	42	20 / 1	0	SPARE	

PANEL LOADING SUMMARY

LOAD TYPE	PH A	PH B	TOTAL
INCANDESCENT	0.5	0.5	1.0 kVA
INDUCTIVE LTG	0.0	0.0	0.0 kVA
RECEPTACLES	5.6	4.5	4.9 kVA
MOTORS	0.0	0.0	0.0 kVA
APPLIANCES	0.4	0.0	2.0 kVA
HEAT	0.0	0.0	0.0 kVA
COMPUTER	0.0	0.0	0.0 kVA
OTHER	0.0	1.4	0.0 kVA
NONCONCIDEN	0.0	0.0	0.0 kVA
PEAK LOAD	0.0	0.0	0.0 kVA
TOTAL	6.4	6.4	6.9 20.0 kVA

PHASE BALANCE (%)	A-B	B-C	C-A	PF
	100	92	92	91

MIN PANEL AMPACITY 54 AMPERES

NEC DEMAND LOAD SUMMARY

LOAD TYPE	kW	POWER FACT	kVA	DEMAND FACTOR	CALCULATED LOAD
INCANDESCENT	1.0	@ 100%	= 1.0	@ 125%	= 1.3 kVA
INDUCTIVE LTG	0.0	@ 95%	= 0.0	@ 125%	= 0.0 kVA
RECEPTACLES					
FIRST 10 kVA	9.5	@ 95%	= 10.0	@ 100%	= 10.0 kVA
REMAINDER	4.7	@ 95%	= 4.9	@ 50%	= 2.5 kVA
MOTORS					
LARGEST	0.0	@ 80%	= 0.0	@ 125%	= 0.0 kVA
REMAINDER	0.0	@ 80%	= 0.0	@ 100%	= 0.0 kVA
APPLIANCES	1.9	@ 80%	= 2.4	@ 100%	= 2.4 kVA
HEAT	0.0	@ 100%	= 0.0	@ 125%	= 0.0 kVA
COMPUTER	0.0	@ 95%	= 0.0	@ 100%	= 0.0 kVA
OTHER	1.2	@ 85%	= 1.4	@ 100%	= 1.4 kVA
NONCONCIDEN	0.0	@ 95%	= 0.0	@ 0%	= - kVA
PEAK LOAD	0.0	@ 90%	= 0.0	@ 125%	= 0.0 kVA
10 % SPARE	1.8	@ 90%	= 2.0	@ 100%	= 2.0 kVA
TOTAL	20.0	kW	22.0	kVA	19.6 kVA

Version 0816a

Motor Control Center Schedule

Version_0519

NAME: **MCC-2A (E)**

N/A MCB
80% RATED
MLO MAIN LUGS
600 AMP BUS
COPPER BUSING
65000 SYM RMS AMPS PANEL SHORT CIRCUIT RATING
583 Amps MINIMUM AMPACITY

FED FROM MDP-1A
VOLTAGE 480 V.
PHASE 3 PH
WIRE 3 W
HZ 60

TYPE: INDOOR
DEPTH: 20 INCHES
WIDTH: 20 INCHES PER SECTION
NEUTRAL BUS: NO
GROUND BUS: YES
GENERAL NOTES 1. EXISTING MCC
2. [ ]
3. [ ]
4. [ ]

Circuit #	Equipment Identification (See Note 1)	Motor Data HP	Phase	Terminal Voltage	FLA	Circuit Total kVA	Function Code(s)	NEMA Size STARTER	Breaker/Fuse Size Type	OCP Size	Branch Circuit Size	Remarks
HOIST-1	HOIST	5	3	460	7.6	6.06	FVR	1	CB	15 / 3	1/2" C - 3#12, 1#12G	
TFLPC	XF LIGHTING PANEL D	- -	3	460	--	25.0	--	--	CB	35 / 3	1" C - 3#6, 1#10G	
TFLPD	XF LIGHTING PANEL D	- -	3	460	--	25.0	--	--	CB	35 / 3	3/4" C - 3#10, 1#10G	
PNL-J	**PANEL J (N)**	**- -**	**3**	**460**		**180**	**--**	**--**	**CB**	**225 / 3**	**2" C - 3#4/0, 1#4G**	
SPARE	SPARE	- -	--	--	--	- -	--	--	MCP	-- / --	--	
P-6A	MAKEUP PUMP 1	40	3	460	52.0	41.43	FVNR	3	MCP	100 / 3	3/4" C - 3#12, 1#12G	
P-6B	MAKEUP PUMP 2	40	3	460	52.0	41.43	FVNR	3	MCP	100 / 3	3/4" C - 3#12, 1#12G	
P-14	CIRCULATION PUMP 1	7-1/2	3	460	11.0	8.76	FVNR	1	MCP	15 / 3	3/4" C - 3#12, 1#12G	
P-15	CIRCULATION PUMP 2	7-1/2	3	460	11.0	8.76	FVNR	1	MCP	15 / 3	1/2" C - 3#12, 1#12G	
P-2AE	SYSTEM PUMP ZONE 1&2	60	3	460	77.0	61.35	FVNR	4	MCP	150 / 3	1-1/2" C - 3#1, 1#6G	
P-3AE	SYSTEM PUMP ZONE 3&4	60	3	460	77.0	61.35	FVNR	4	MCP	150 / 3	1-1/2" C - 3#1, 1#6G	

Funcion Code(s):
FVNR = Full Voltage Non-Reversing
FVR = Full Voltage Reversing
2S'W = Two Speed, One Winding
2S2W = Two Speed, Two Winding
VSD = Variable Speed Drive
SSR'VS = Solid State Reduced Voltage

LOAD TYPE	CONNECTED LOAD	POWER FACTOR	kVA	DEMAND FACTOR	NEC Calculated LOAD
INCANDESCENT	0.0 kW @	100%	0.0	125%	0.0 kVA
INDUCTIVE	0.0 kW @	95%	0.0	125%	0.0 kVA
RECEPTACLES					
FIRST 10 kVA	0.0 kW @	95%	0.0	100%	0.0 kVA
REMAINDER	0.0 kW @	95%	0.0	50%	0.0 kVA
MOTORS					
LARGEST	51.2 kW @	80%	64.0	125%	80.0 kVA
REMAINDER	140 kW @	80%	175	100%	175 kVA
APPLIANCES	0.0 kW @	80%	0.0	100%	0.0 kVA
HEAT	0.0 kW @	100%	0.0	100%	0.0 kVA
COMPUTER	0.0 kW @	95%	0.0	100%	0.0 kVA
OTHER	196 kW @	85%	230	100%	230 kVA
NONCOINCIDENT	0.0 kW @	85%	0.0	0%	0.0 kVA
PEAK LOAD	0.0 kW @	95%	0.0	125%	0.0 kVA
0% SPARE	0.0 kW @	95%	0.0	100%	0.0 kVA
TOTAL	387 kW		469	kVA	485 kVA

Power Factor: 83%
Minimum MCC Ampacity: 583 Amps

PANEL: **Panel A (E)** VOLTAGE: 120/240 V. TYPE: LIGHTING & APPLIANCE
1 PH 3 W. 60 HZ MOUNTING: SEE PLAN
FED FROM: PANEL L2 PANEL COVER: (SEE SPECIFICATIONS)
N/A AMP MAIN RATED AT 80% NEUTRAL BUS: YES
MLO AMP MAIN LUGS GROUND BUS: YES ISOLATED GND: NO
225 AMP BUS NOTE: 1. THIS IS AN EXISTING PANEL
(SEE SPECIFICATIONS) BUSING 2. SERVED BY PANLE L2
(SEE FAULT SCHEDULE) SYMMETRICAL RMS AMPS 3. [ ]
PANEL SHORT CIRCUIT RATING 4. [ ]

NOTE	DESCRIPTION	CCT VA	BREAKER AMP / P	CCT	PH	CCT	BREAKER AMP / P	CCT VA	DESCRIPTION	NOTE
	LGHT EAST & CENTER	640	20 / 1	1	A	2	20 / 1	640	LGHT WEST SHOP & SW ENTR	
	LGHT OFFICE & SOUTH ENTR	640	20 / 1	3	B	4	20 / 1	640	LGHT CORRIDOR & N ENTR	
	LGHT LAB & JANITORS CLOSET	640	20 / 1	5	A	6	20 / 1	640	LGHT LOCKER ROOM	
	DISCONNECT	0	20 / 1	7	B	8	20 / 1	970	RECPT HALL, LAB, DRINK FT	
	RECEPT SHOP	360	20 / 1	9	A	10	20 / 1	720	RECEPT OFFICE, CORRIDOR	
	LGHT EXTERIOR TRUCK SCALES	640	20 / 1	11	A	12	50 / --	5000	WELDER OUTLET	
	CLOCKS OFFICE HALL LAB	600	20 / 1	13	A	14	-- / 2	3600	* *	
	REFRIDGERATOR	1000	20 / 1	15	B	16	15 / 1	500	GATES	
	CIRC PUMP	1200	20 / 1	17	A	18	50 / --	6000	WELDER OUTLET	
	UNKNOWN	0	20 / 1	19	B	20	-- / 2	6000	* *	
	UNKNOWN	0	20 / 1	21	A	22	20 / 1	0	UNKNOWN	
	UNKNOWN	0	20 / 1	23	B	24	20 / 1	0	UNKNOWN	
	UNKNOWN	0	20 / 1	25	A	26	20 / 1	0	UNKNOWN	
	HW CIRCP PUMP/DOM CLOSET	1200	20 / 1	27	B	28	20 / 1	0	UNKNOWN	
	RECEPT N. WALL SCOTTS OFFIC	720	20 / 1	29	A	30	20 / 1	240	BAS SERVER ROOM	
	RECEPT N. WALL SCOTTS OFF	720	30 / 1	31	B	32	20 / 1	0	UNKNOWN	
	UNKNOWN	0	30 / --	33	A	34	25 / --	2500	AC BREAK ROOM	
	AC EQUITSU	800	20 / --	35	B	36	-- / 2	2500	* *	
	* *	800	-- / 2	37	B	38	20 / 1	0	UNKNOWN	
	UNKNOWN	0	20 / 1	39	B	40	20 / 1	1560	LIGHTS & RECEPT SCOTTS OF	
				41	A	42	20 / 1	720	RECEPT SCOTTS OFF	

PANEL LOADING SUMMARY

LOAD TYPE	PH A	PH B	TOTAL
INCANDESCENT	0.0	0.0	0.0 kVA
INDUCTIVE LTG	7.9	7.6	15.5 kVA
RECEPTACLES	2.2	2.2	4.3 kVA
MOTORS	1.2	1.7	2.9 kVA
APPLIANCES	3.3	4.6	7.9 kVA
HEAT	0.0	0.0	0.0 kVA
COMPUTER	0.3	0.0	0.3 kVA
OTHER	6.6	6.0	12.6 kVA
NONCOINCIDENT	0.0	0.0	0.0 kVA
PEAK LOAD	0.0	0.0	0.0 kVA
TOTAL	23.4	22.0	43.4 kVA

PHASE BALANCE (%)	A-B	PF
	97	88

MIN PANEL AMPACITY 199 AMPERES

NEC DEMAND LOAD SUMMARY

LOAD TYPE	kW	POWER FACT	kVA	DEMAND FACTOR	CALCULATED LOAD
INCANDESCENT	0.0	@ 100%	= 0.0	@ 125%	= 0.0 kVA
INDUCTIVE LTG	14.7	@ 95%	= 15.5	@ 125%	= 19.4 kVA
RECEPTACLES					
FIRST 10 kVA	4.1	@ 95%	= 4.3	@ 100%	= 4.3 kVA
REMAINDER	0.0	@ 95%	= 0.0	@ 50%	= - kVA
MOTORS					
LARGEST	1.2	@ 80%	= 1.2	@ 125%	= 1.5 kVA
REMAINDER	1.4	@ 80%	= 1.7	@ 100%	= 1.7 kVA
APPLIANCES	6.3	@ 80%	= 7.9	@ 100%	= 7.9 kVA
HEAT	0.0	@ 100%	= 0.0	@ 125%	= 0.0 kVA
COMPUTER	0.2	@ 95%	= 0.3	@ 100%	= 0.3 kVA
OTHER	10.7	@ 85%	= 12.6	@ 100%	= 12.6 kVA
NONCOINCIDEN	0.0	@ 95%	= 0.0	@ 0%	= - kVA
PEAK LOAD	0.0	@ 90%	= 0.0	@ 125%	= 0.0 kVA
0 % SPARE	0.0	@ 90%	= 0.0	@ 100%	= 0.0 kVA
TOTAL	38.4	kW	43.4	kVA	47.7 kVA

Version 1221

PANEL: **PANEL L2(E)** VOLTAGE: 120/208 V. TYPE: PANELBOARD
3 PH 4 W. 60 HZ MOUNTING: SEE PLAN
FED FROM: T-T2 PANEL COVER: (SEE SPECIFICATIONS)
N/A AMP MAIN RATED AT 80% NEUTRAL BUS: YES
MLO AMP MAIN LUGS GROUND BUS: YES ISOLATED GND: NO
400 AMP BUS NOTE: 1. EXISTING PANEL BASEMENT FLOOR
(SEE SPECIFICATIONS) BUSING 2. SERVED BY MDP-1A
(SEE FAULT SCHEDULE) SYMMETRICAL RMS AMPS 3. PANEL REMOVAL
PANEL SHORT CIRCUIT RATING 4. [ ]

NOTE	DESCRIPTION	CCT VA	BREAKER AMP / P	CCT	PH	CCT	BREAKER AMP / P	CCT VA	DESCRIPTION	NOTE
	PANEL OL3	9000	100 / --	1	A	2	100 / --	#2000	PANEL A	3
	* *	9000	-- / --	3	B	4	-- / 2	**12000**	* *	
	* *	9000	-- / 3	5	C	6	100 / --	12000	PANEL B	
	UNKNOWN	0	20 / --	7	A	8	/ 2	12000		
	* *	0	-- / 2	9	B	10	100 / --	12000	PANEL C	
	SPACE	0	20 / 1	11	C	12	/ 2	12000		
	RECEPTACLES SERVER RM	540	20 / 1	13	A	14	20 / 1	900	UNKNOWN	
	RECEPTACLES CTRL RM	900	20 / 1	15	B	16	30 / --	3000	WELDING PLUG	
	QUAD RECEPTACLE CTRL RM	360	20 / 1	17	C	18	-- / 2	3000	* *	
	FAN CO

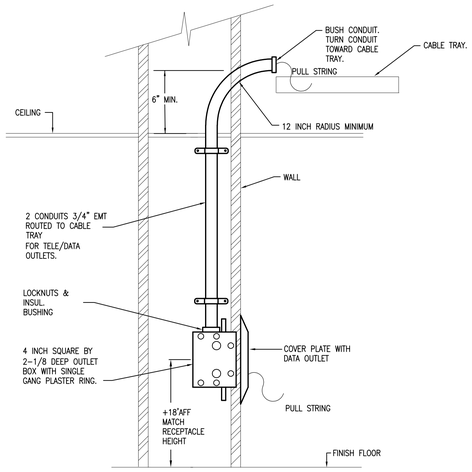

1 E600 **TYPICAL TELE/DATA OUTLET DETAIL**
SCALE: NONE

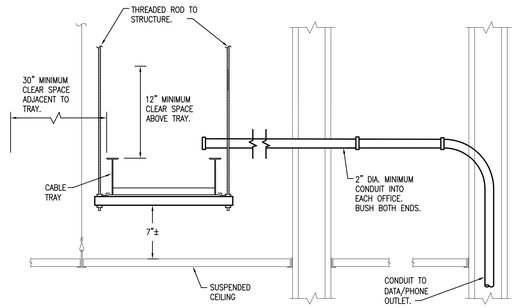

2 E600 **TELECOM PATHWAY DETAIL**
SCALE: NONE

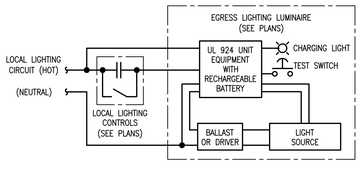

4 E600 **LIGHTING CONTROLS DETAIL**
SCALE: NONE

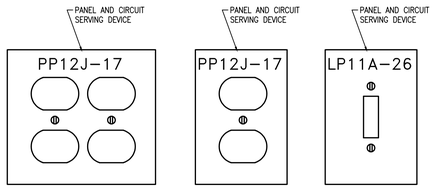

3 600 **DEVICE LABELING DETAIL**
SCALE: NONE

NOTE: LABEL WITH BROTHER "P-TOUCH" SYSTEM. PROVIDE CLEAR OR WHITE TAPE WITH BLACK LETTERING.

FFKR ARCHITECTS
730 Pacific Avenue - Salt Lake City, Utah 84104
O 801.521.6186 - FFKR.COM

RMH GROUP
engineering & sustainable future
MECHANICAL, ELECTRICAL, INDUSTRIAL + SUSTAINABLE DESIGN
12000 West Colfax Avenue
Lakewood, Colorado 80215
Phone 303.239.0909
Fax 303.232.0135
www.rmhgroup.com
RMH Group project number

© 2021
19977

U OF U BLDG. 303 SEISMIC UPGRADE, PROJ.#22210 - C.D. PHASE 4

SALT LAKE CITY UTAH

CONSTRUCTION SET - 10-10-2022

LICENSED PROFESSIONAL ENGINEER
No. 9788512-2202
DANIEL V SANDBLOM
10/10/2022
STATE OF UTAH

△	DATE	REVISION
0	10/10/2022	CONSTRUCTION SET

PROJECT NUMBER

ELECTRICAL DETAILS

E-600-4

H:\Jobs\19\19977\AutoCAD\SHEETS BY PHASE\SEISMIC UPGRADE PH4\19977-E600-4 Electrical Details.dwg, 10/10/2022 12:43:48 PM, Bluebeam PDF
5/7/2019 11:13:15 AM