Ivy Acres Park

1397 West Cook Lane
Farmington, UT

FARMINGTON
1847
MORE TIME FOR LIVING

blū

construction documents
bid set

March 6, 2024

sheet index

1 |	L000 - cover sheet
2 |	L001 - sheet index
3 |	LD100 - overall demolition plan
4 |	LS100 - overall site plan
5-9 |	LS101 - LS105 - site plan
10-11 |	LS401- LS402 - site plan enlargements
12-18 |	LS501- LS507 - site plan details
19 |	C001 - general notes
20 |	C100 - overall site utility plan
21-25 |	C101 - C105 - site utility plan
26 |	C200 - overall grading and drainage plan
27-31 |	C201 - C205 - grading and drainage plan
32 |	C300 - erosion control plan
33-34 |	C400 - C401 - details
35 |	SS001 - general structural notes
36 |	SS002 - special inspections
37 |	SS003 - structural schedule & typical details
38 |	SS101 - overall site plan
39 |	SS103 - sign foundations
40 |	SS104 - pickleball & basketball plan
41 |	SS501 - PT details
42 |	G1.3 - accessibility requirements
43 |	G1.4 - 3d views
44 |	A1.1 - site bldg. floor plans
45 |	A1.2 - site bldg. elevations and sections
46 |	A2.1 - floor plan
47 |	A3.1 - construction types
48 |	A3.2 - door schedule & details
49 |	A4.1 - exterior elevations
50 |	A4.2 - exterior details
51 |	A5.1 - building sections
52 |	A6.1 - large scale stair plans
53 |	A7.1 - roof plan
54-55 |	A7.2 - A7.3 - roof details
56 |	A8.1 - reflected ceiling fan
57 |	A9.1 - large scale floor plan & int elevations
58 |	S0.1 - general structural notes
59 |	S0.2 - special inspections
60 |	S0.3 - construction details
61 |	S1.1 - foundation plan
62 |	S1.2 - construction details
63 |	S2.1 - roof framing plan
64 |	S3.1 - masonry and shear wall plans
65-66 |	S4.1 - S4.2 - construction details
67 |	S5.1 - structural plans
68 |	S5.2 - construction details
69 |	M0.1 - mechanical cover sheet
70-71 |	M5.1 - M5.2 - mechanical details
72 |	M6.1 - mechanical shedules
73 |	MH1.1 - level 1 mechanical plan
74 |	MH1.2 - roof mechanical plan
75 |	P0.1 - plumbing cover sheet
76-77 |	P5.1 - P5.2 - plumbing details
78 |	P6.1 - plumbing schedules
79 |	PL1.1 - level 1 plumbing plan - DWV
80 |	PL1.2 - roof plumbing plan - DWV
81 |	PL1.3 - level 1 plumbing plan - water
82 |	E001 - electrical symbols and notes
83 |	E002 - electrical schedules
84 |	E003 - electrical schedule
85 |	E004 - panelboard schedule
86 |	E005 - systems schedules
87-89 |	E060 - E062 - electrical diagrams
90 |	E063 - systems diagrams
91 |	E080 - one-line diagram
92 |	E101 - overall lighting site plan
93 |	E101.ALT - overall lighting site plan
94 |	E102 - overall electrical site plan
95 |	E103 - overall systems site plan
96 |	E151 - restroom/pavilion lighting plan
97 |	E152 - restroom/pavilion power plan
98 |	E153 - restroom/pavilion system plan
99 |	E154 - enlarged electrical site plan
100 |	SP100 - overall interactive water feature plan
101 |	SP200 - enlarged interactive water feature plan
102 |	SP201 - interactive water feature schedules
103 |	SP300 - river flow, circulation and drain piping plan
104 |	SP301 - feature headwaters & endwaters piping plan
105 |	SP302 - spray features piping plan
106 |	SP400 - interactive water feature equipment room plan
107 |	SP401 - circulation equipment schedule
108 |	SP410 - circulation equipment details
109 |	SP420 - equipment room and balancing tank sections and details
110 |	SP500 - sections
111 |	SP501 - structural details
112-113 |	SP600 - SP601 - details
114 |	LP100 - overall landscape plan
115,117,119,121,123 |	LP101 - LP105 - tree and groundcover plans
116,118,120,122,124 |	LP111 - LP115 - shrub plans
125-126 |	LP501 - LP502- landscape notes, details & schedule
127|	LI100 - overall irrigation plan
128-132 |	LI101 - LI105 - irrigation plan
133-136 |	LI501 - LI504 - irrigation notes & details

project team

OWNER
Farmington City
160 S Main St
Farmington, Utah 84025
P: 801.451.2383 CONTACT: Sylvia Clark
F: -- E-MAIL: sclark@farmington.utah.gov

LANDSCAPE ARCHITECT
blu line designs
8719 S. Sandy Parkway
Sandy, Utah 84070
P: 801.679.3157 CONTACT: Brent Potter
F: -- E-MAIL: brent@blulinedesigns.com

ARCHITECT
WPA Architecture
475 Freedom Blvd 200 W
Provo, UT 84601
P: 801.374.0800 CONTACT: Bruce Fallon
F: -- E-MAIL: bfallon@wpa-architecture.com

SURVEY/CIVIL ENGINEER
Ensign Engineering
919 N 400 W
Layton, UT 84041
P: 801.547.1100 CONTACT: Cameron Preston
F: -- E-MAIL: cpreston@ensignengineering.com

ELECTRICAL ENGINEER
BNA Consulting
4225 Lake Park Boulevard Suite 275
West Valley City, Utah 84120
P: 801.532.2196 CONTACT: Rich Bradley
F: -- E-MAIL: rich@bnaconsulting.com

WATER FEATURE ENGINEER
Water Design
6740 South 1300 East, Suite 110
Salt Lake City, Utah 84121
P: 801.261.4009 CONTACT: Brian Anderson
F: -- E-MAIL: brian@waterdesign.com

general notes

1. ALL CONSTRUCTION SHALL BE DONE IN ACCORDANCE WITH THE LATEST AMERICAN PUBLIC WORKS ASSOCIATION (APWA) AND FARMINGTON CITY STANDARDS, SPECIFICATIONS, AND DETAILS. ALL WORK AND MATERIALS NOT IN CONFORMANCE WITH THESE ARE SUBJECT TO REMOVAL AND REPLACEMENT AT THE CONTRACTOR'S EXPENSE.

2. EXISTING UTILITIES, EASEMENTS, AND STRUCTURES SHOWN ON THE DRAWINGS ARE IN ACCORDANCE WITH AVAILABLE RECORDS. THE CONTRACTOR SHALL VERIFY THE EXACT LOCATION, SIZE, TYPE, AND STRUCTURES TO BE ENCOUNTERED ON THE PROJECT PRIOR TO ANY EXCAVATION AND CONSTRUCTION IN THE VICINITY OF THE EXISTING UTILITIES AND STRUCTURES.

3. IT SHALL BE THE CONTRACTOR'S RESPONSIBILITY TO OBTAIN ALL REQUIRED PERMITS, LICENSES, AND APPROVALS REQUIRED TO LEGALLY AND RESPONSIBLY COMPLETE THE WORK.

4. THE CONTRACTOR IS RESPONSIBLE FOR THE REMOVAL, DISPOSAL, OR RELOCATION OF ALL OBSTRUCTIONS AND DEBRIS WITHIN THE DELINEATED CONSTRUCTION AREA PRIOR TO STARTING NEW CONSTRUCTION. THE CONTRACTOR IS ALSO RESPONSIBLE FOR THE REMOVAL AND DISPOSAL OF ANY DEBRIS RESULTING FROM NEW CONSTRUCTION.

5. CONTRACTOR SHALL TAKE PRECAUTIONS TO AVOID DAMAGE TO EXISTING FEATURES AND FACILITIES SCHEDULED TO REMAIN AS PART OF THE FINISHED CONSTRUCTION. REPAIR, REPLACEMENT, AND/OR REMOVAL AS DETERMINED BY OWNER SHALL BE AT THE CONTRACTOR'S EXPENSE.

6. THE CONTRACTOR SHALL BE RESPONSIBLE TO ADJUST THE TOPS OF ALL EXISTING MANHOLES, CATCH BASINS, INLETS, COVERS, AND SIMILAR STRUCTURES TO FINISH GRADE.

7. THE CONTRACTOR SHALL CALL BLUE STAKES AT 1-800-662-4111 FOR UNDERGROUND UTILITY LOCATIONS AT LEAST 48 HOURS PRIOR TO COMMENCEMENT OF ANY CONSTRUCTION OR EXCAVATION.

8. ALL NEW UNDERGROUND UTILITIES SHALL HAVE UNDERGROUND UTILITY WARNING TAPE. INSTALL UNDERGROUND UTILITY WARNING TAPE A MAXIMUM OF 12 INCHES ABOVE THE UTILITY PIPE CROWN. TAPE SHALL BE A MINIMUM 3 INCH WIDTH. TAPE SHALL BE ACID AND ALKALI RESISTANT, REINFORCED FOR 100 LB. TENSILE STRENGTH AND METALLIC SUCH THAT THE TAPE CAN BE DETECTED WITH A STANDARD SURVEY-TAPE METAL DETECTOR TO A DEPTH OF 6 FEET. TAPE COLORS SHALL BE BLUE FOR WATER AND GREEN FOR SEWER. IMPRINT WITH THE WORD 'CAUTION' AT A MAXIMUM OF 2 FOOT INTERVALS, IDENTIFYING THE UTILITY LINE BEING PROTECTED, IRRIGATION MAINLINES INCLUDED.

9. THE PROJECT SHALL NOT BE CONSIDERED COMPLETE UNTIL ALL CURBS, PAVEMENT, AND SIDEWALKS HAVE BEEN SWEPT CLEAN OF ALL DIRT AND DEBRIS.

10. CONTRACTOR SHALL ROUGH GRADE TO WITHIN +/- A TENTH OF A FOOT FROM FINISH GRADE UNLESS OTHERWISE NOTED.

11. ALL SPOT ELEVATIONS ARE FINISH GRADE UNLESS OTHERWISE NOTED.

12. ALL CLARIFICATIONS OF DISCREPANCIES BETWEEN THE DRAWINGS AND THE SITE SHALL BE BROUGHT TO THE ATTENTION OF THE OWNER'S REPRESENTATIVE PRIOR TO BEGINNING OF WORK.

13. CROSS SLOPES ON ALL NEW HARDSCAPE AND PAVEMENT SHALL NOT EXCEED 2% UNLESS OTHERWISE SHOWN.

14. ALL AREAS WITHIN AND AFFECTED BY THIS PROJECT SHALL HAVE POSITIVE DRAINAGE. POSITIVE DRAINAGE SHALL BE PROVIDED TO DIRECT STORMWATER AWAY FROM ALL STRUCTURES.

15. CONTRACTOR SHALL PROVIDE AND MAINTAIN A STORM WATER POLLUTION PREVENTION PLAN (SWPPP) AS REQUIRED BY FARMINGTON CITY AND THE STATE OF UTAH.

16. LAYOUT OF ALL EDGER SHALL BE REVIEWED AND APPROVED IN THE FIELD BY OWNER PRIOR TO INSTALLATION.

project location

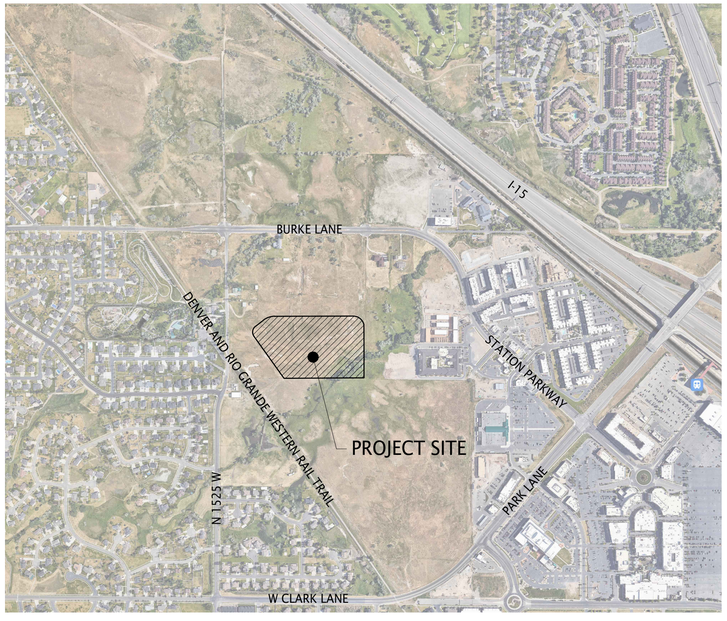

vicinity map

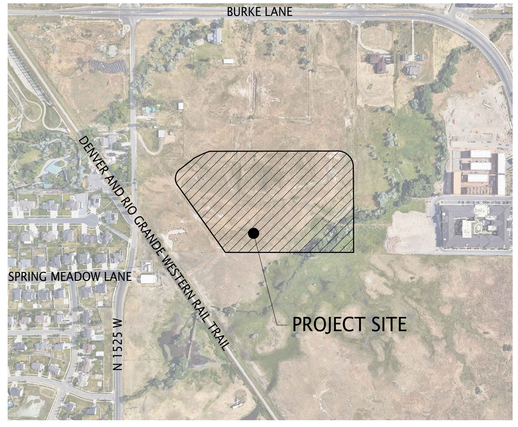

project site

blu line designs
planning | landscape architecture | design
8719 S. Sandy Parkway
Sandy, UT 84070
p 801.913.7994

CLIENT
FARMINGTON CITY
CONTACT: SYLVIA CLARK
PH: 801.939.9295
EMAIL:
SCLARK@FARMINGTON.UTAH.GOV

IVY ACRES PARK

1397 WEST COOK LANE
FARMINGTON, UT

REVISIONS

NO.	symmetry	DESCRIPTION

Stamp
STATE OF UTAH
CORY A. SHUPE
Licensed Landscape Architect
03/06/2024

Designed By:	BP
Drawn By:	BP, TH
Date:	03/06/2024
Checked By:	CS
Project No:	22-246

Drawing Title
SHEET INDEX

Drawing number
L001



REFERENCE NOTES SCHEDULE

DEMO

SYMBOL	DESCRIPTION	QTY
D-01	EXISTING ADA RAMPS TO BE PRESERVED AND PROTECTED	
D-02	EXISTING CURB AND GUTTER TO BE PROTECTED	
D-03	EXISTING CURB AND GUTTER TO BE SAWCUT AND REMOVED	
D-04	EXISTING STORMWATER STRUCTURE TO BE REMAIN AND BE MODIFIED	
D-05	EXISTING STORM LINE TO BE PRESERVED AND PROTECTED	

DEMO

SYMBOL	DESCRIPTION	QTY
	CLEAR AND GRUB	451,531 SF
	VEGETATION ASSESSMENT REMOVE NOXIOUS WEEDS AND INVASIVE PLANT/TREE SPECIES	67,288 SF
	EXISTING CURB AND GUTTER TO BE SAWCUT AND REMOVED	271 SF

DEMOLITION NOTES:

1. ALL WORK SHALL BE DONE IN ACCORDANCE WITH GOVERNING AGENCY STANDARDS AND SPECIFICATIONS. IN THE ABSENCE OF PROJECT STANDARD AND SPECIFICATIONS APWA STANDARD AND SPECIFICATIONS SHALL GOVERN.

2. ALL EXISTING TREES, HARDSCAPE, LANDSCAPE, AND OTHER FEATURES SHOWN TO BE DEMOLISHED AND REMOVED SHALL BE VERIFIED IN FIELD WITH OWNER PRIOR TO DEMOLITION.

3. CONTRACTOR SHALL RETAIN AND PROTECT ALL EXISTING IMPROVEMENTS UNLESS OTHERWISE NOTED. CONTRACTOR IS RESPONSIBLE TO REPAIR ALL SIDEWALK, PAVEMENT, GRAVEL, UTILITIES, LANDSCAPING, IRRIGATION,FENCING AND EXISTING IMPROVEMENTS DAMAGED AS PART OF CONSTRUCTION.

4. CURBS DESIGNATED TO BE DEMOLISHED SHALL BE DEMOLISHED TO THE NEAREST EXPANSION JOINT, MATCHING THESE PLANS AS CLOSELY AS POSSIBLE.

5. IT IS THE CONTRACTORS RESPONSIBILITY TO CONTACT BLUE STAKES OF UTAH PRIOR TO STARTING ANY ACTIVITIES. ALL EXISTING UTILITIES SHOWN ON THE PLANS ARE APPROXIMATIONS ONLY.

6. EXISTING UNDERGROUND UTILITIES AND IMPROVEMENTS ARE SHOWN IN THEIR APPROXIMATE LOCATIONS BASED UPON RECORD INFORMATION AVAILABLE AT THE TIME OF PREPARATION OF THESE PLANS. LOCATIONS MAY NOT HAVE BEEN VERIFIED IN THE FIELD AND NO GUARANTEE IS MADE AS TO THE ACCURACY OF COMPLETENESS OF THE INFORMATION SHOWN. IT SHALL BE THE RESPONSIBILITY OF THE CONTRACTOR TO DETERMINE THEN EXISTENCE AND LOCATION OF THE UTILITIES SHOWN ON THESE PLANS OR INDICATED IN THE FIELD BY LOCATING SERVICES. ANY ADDITIONAL COSTS INCURRED AS A RESULT OF THE CONTRACTOR'S FAILURE TO VERIFY THE LOCATIONS OF EXISTING UTILITIES PRIOR TO THE BEGINNING OF CONSTRUCTIONS IN THEIR VICINITY SHALL BE BORNE BY THE CONTRACTOR AND ASSUMED INCLUDED IN THE CONTRACT. THE CONTRACTOR IS TO VERIFY ALL CONNECTIONS POINTS WITH THE EXISTING UTILITIES. THE CONTRACTOR IS RESPONSIBLE FOR ANY DAMAGE CAUSED TO THE EXISTING UTILITIES AND UTILITY STRUCTURES THAT ARE TO REMAIN. IF CONFLICTS WITH EXISTING UTILITIES OCCUR, THE CONTRACTOR SHALL NOTIFY THE ENGINEER PRIOR TO CONSTRUCTION TO DETERMINE IF ANY FIELD ADJUSTMENTS SHOULD BE MADE. ENSURE ALL OSHA STANDARDS ARE FOLLOWED.

7. CONTRACTOR IS RESPONSIBLE TO PROVIDE, INSTALL AND MAINTAIN APPROPRIATE TRAFFIC CONTROL DEVICES AS WELL AS ANY ADDITIONAL TRAFFIC CONTROL DEVICES THAT MAY BE REQUIRED TO ENSURE SAFE AND EFFICIENT MOVEMENT OF TRAFFIC AND PEDESTRIANS THROUGH OR AROUND THE WORK AREA AND TO PROVIDE MAXIMUM PROTECTIONS AND SAFETY TO ROAD WORKERS.

8. IF DURING THE CONSTRUCTION PROCESS, CONDITIONS ARE ENCOUNTERED WHICH INDICATE AN UNIDENTIFIED SITUATION IS PRESENT, THE CONTRACTOR SHALL CONTACT THE OWNER AND ENGINEER IMMEDIATELY.

Scale: 1" = 50'-0"

0 25 50 100 150

blu line designs
planning | landscape architecture | design

8719 S. Sandy Parkway
Sandy, UT 84070
p 801.913.7994

CLIENT

FARMINGTON CITY
CONTACT: SYLVIA CLARK
PH: 801.939.9295
EMAIL:
SCLARK@FARMINGTON.UTAH.GOV

FARMINGTON

IVY ACRES PARK

1397 WEST COOK LANE
FARMINGTON, UT

REVISIONS

NO.	symmetry	DESCRIPTION

Stamp

STATE OF UTAH
CORY A. SHUPE
LANDSCAPE ARCHITECT
Licensed Landscape Architect
03/06/2024

Designed By:	BP
Drawn By:	BP, TH
Date:	03/06/2024
Checked By:	CS
Project No:	22-246

Drawing Title

OVERALL DEMOLITION PLAN

Drawing number

LD100

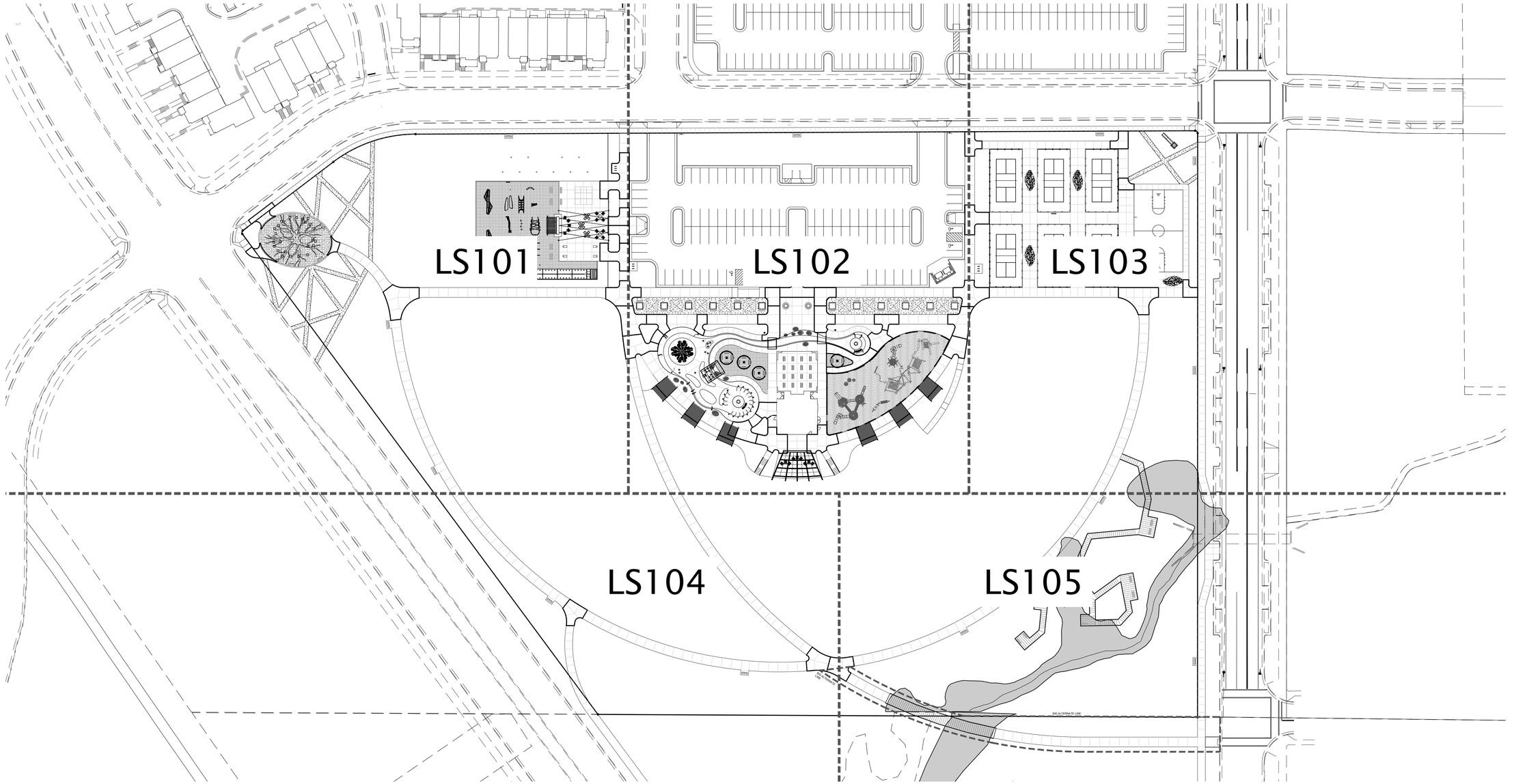

Scale: 1" = 50'-0"

0 25 50 100 150

N

IVY ACRES PARK

1397 WEST COOK LANE
FARMINGTON, UT

blu line designs
planning | landscape architecture | design

8719 S. Sandy Parkway
Sandy, UT 84070
p 801.913.7994

CLIENT

FARMINGTON CITY
CONTACT: SYLVIA CLARK
PH: 801.939.9295
EMAIL:
SCLARK@FARMINGTON.UTAH.GOV

FARMINGTON

REVISIONS

NO.	yy/mm/dd	DESCRIPTION

Stamp

STATE OF UTAH
CORY A. SHIRE
Licensed Landscape Architect

03/06/2024

Designed By:	BP
Drawn By:	BP, TH
Date:	03/06/2024
Checked By:	CS
Project No:	22-246

Drawing Title

OVERALL
SITE PLAN

Drawing number

LS100

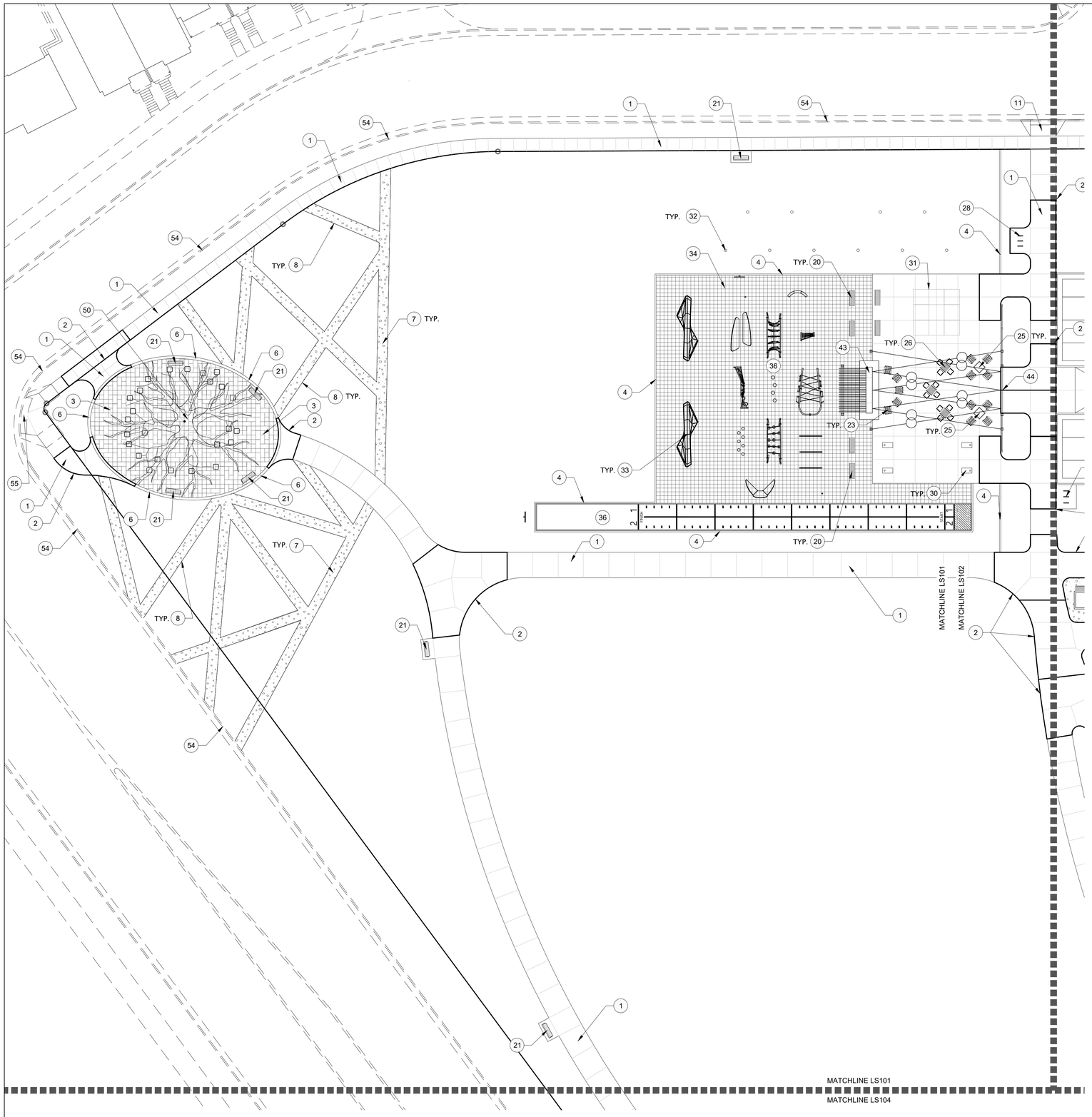

REFERENCE NOTES SCHEDULE

SYMBOL	DESCRIPTION	DETAIL
1	CONCRETE WALKWAY	
2	MONOLITHICALLY POURED SIDEWALK	1/LS501
3	BELGARD PAVERS - SEE LS401	2/LS501
4	6" CONCRETE EDGER	3/LS501
5	6" PLANTER CURB	4/LS501
6	12" CONCRETE CURB	6/LS501
7	DECOMPOSED GRANITE PATHS	7/LS501
8	ALUMINUM EDGING	8/LS501
9	PARKING LOT - SEE CIVIL	
10	CURB AND GUTTER - SEE CIVIL	
11	ADA RAMP - SEE CIVIL	
12	CONCRETE STAIRS	9/LS501
13	HAND RAIL	10/LS501
14	BOARDWALK WITH VIEWING PLATFORMS	2/LS502
15	BOARDWALK BRIDGE - BID ALTERNATE	2/LS502
16	PICKLEBALL COURTS - SEE LS402	
17	6' PICKLEBALL COURT EXTERIOR FENCE	7/LS502
18	4' INTERIOR PICKLEBALL COURT FENCE	8/LS502
19	BASKETBALL COURT - SEE LS402	
20	BACKLESS BENCH	10/LS502
21	BACKED BENCH	11/LS502
22	CIRCULAR BENCH	3/LS502
23	ADIRONDACK STYLE CHAIR	7/LS502
24	PEBBLE SEAT	10/LS502
25	LOW TABLE	4/LS503
26	CAFE TABLE AND CHAIRS	8/LS502
27	PICNIC TABLE	9/LS502
28	BICYCLE RACK	6/LS502
29	MARQUEE BOARD	8/LS503
30	CORNHOLE	9/LS503
31	NINE SQUARE	1/LS502
32	HAMMOCKING POLE	1/LS504
33	CLIMBING BOULDER	5/LS501
34	ARTIFICIAL TURF	2/LS505
35	POURED-IN-PLACE RUBBER SURFACING SUBGRADE	2/LS504
36	GAMETIME PRO 5000 CHALLENGE COURSE WITH 40 YD DASH	3/LS504
37	CUSTOM SHADE CANOPY	4/LS504
38	RECTANGULAR CUSTOM SHADE CANOPY	6/LS504
39	CIRCULAR SHADE CANOPY	7/LS504
40	PEDESTRIAN BRIDGE	1/LS505
41	PARK ENTRY SIGN	3/LS505
42	DUMPSTER ENCLOSURE	4/LS505
43	FIRE PLACE WITH TRELLIS STRUCTURE	5/LS505
44	METAL LIGHT STRUCTURE WITH FENCE	2/LS506
45	STEEL STRUCTURE WITH LARGE SWINGS	3/LS506
46	STEEL STRUCTURE WITH STAGE/LOUNGE	1/LS507
47	PARK BUILDING - SEE ARCHITECTURAL	
48	LARGE PAVILION WITH RESTROOMS & WATER FEATURE MECHANICAL - SEE ARCHITECTURAL	
49	INTERACTIVE WATER FEATURE - SEE WATER DESIGN	
50	TREE MONUMENT WITH CUBE LIGHTS (N.I.C.)	4/LS506
51	PLAYGROUND (N.I.C.)	
52	FARMERS MARKET TENT SPACES (N.I.C.)	
53	ENHANCED WETLANDS	
54	EXISTING CURB AND GUTTER	
55	EXISTING ADA RAMP	
56	EXISTING CONCRETE PLATFORM TO BE MODIFIED	
57	EXISTING STREAM	

SYMBOL	DESCRIPTION
	BELGARD PAVERS
	DECOMPOSED GRANITE
	ARTIFICIAL TURF
	POURED-IN-PLACE RUBBER SURFACING SUBGRADE

Scale: 1" = 20'-0"

0 10 20 40 60

blu line designs
planning | landscape architecture | desi
8719 S. Sandy Parkway
Sandy, UT 84070
p 801.913.7994

CLIENT

FARMINGTON CITY
CONTACT: SYLVIA CLARK
PH: 801.939.9295
EMAIL:
SCLARK@FARMINGTON.UTAH.GO

FARMINGTON

IVY ACRES PARK

1397 WEST COOK LANE
FARMINGTON, UT

REVISIONS

NO.	symmetry	DESCRIPTION

Stamp

STATE OF UTAH
CORY A. SHUPE
LICENSED LANDSCAPE ARCHITECT
03/06/2024

Designed By:	BP
Drawn By:	BP, TH
Date:	03/06/2024
Checked By:	CS
Project No:	22-246

Drawing Title

SITE PLAN

Drawing number

LS101

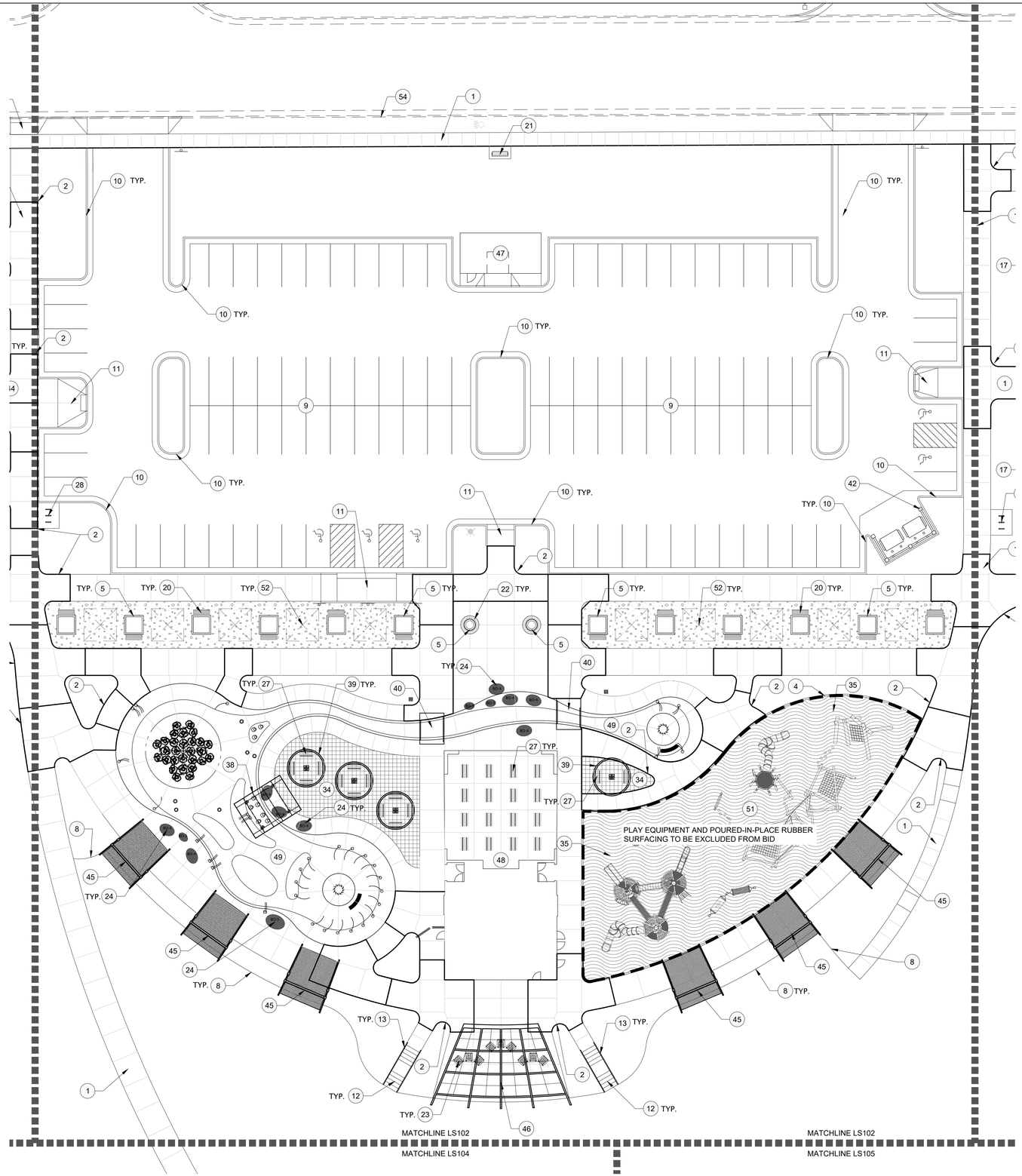

REFERENCE NOTES SCHEDULE

SYMBOL	DESCRIPTION	DETAIL
1	CONCRETE WALKWAY	
2	MONOLITHICALLY POURED SIDEWALK	1/LS501
3	BELGARD PAVERS - SEE LS401	2/LS501
4	6" CONCRETE EDGER	3/LS501
5	6" PLANTER CURB	4/LS501
6	12" CONCRETE CURB	6/LS501
7	DECOMPOSED GRANITE PATHS	7/LS501
8	ALUMINUM EDGING	8/LS501
9	PARKING LOT - SEE CIVIL	
10	CURB AND GUTTER - SEE CIVIL	
11	ADA RAMP - SEE CIVIL	
12	CONCRETE STAIRS	9/LS501
13	HAND RAIL	10/LS501
14	BOARDWALK WITH VIEWING PLATFORMS	2/LS502
15	BOARDWALK BRIDGE - BID ALTERNATE	2/LS502
16	PICKLEBALL COURTS - SEE LS402	
17	6' PICKLEBALL COURT EXTERIOR FENCE	7/LS502
18	4' INTERIOR PICKLEBALL COURT FENCE	8/LS502
19	BASKETBALL COURT - SEE LS402	
20	BACKLESS BENCH	10/LS502
21	BACKED BENCH	11/LS502
22	CIRCULAR BENCH	3/LS502
23	ADIRONDACK STYLE CHAIR	7/LS502
24	PEBBLE SEAT	10/LS502
25	LOW TABLE	4/LS503
26	CAFE TABLE AND CHAIRS	8/LS502
27	PICNIC TABLE	9/LS502
28	BICYCLE RACK	6/LS502
29	MARQUEE BOARD	8/LS503
30	CORNHOLE	9/LS503
31	NINE SQUARE	1/LS502
32	HAMMOCKING POLE	1/LS504
33	CLIMBING BOULDER	5/LS501
34	ARTIFICIAL TURF	2/LS505
35	POURED-IN-PLACE RUBBER SURFACING SUBGRADE	2/LS504
36	GAMETIME PRO 5000 CHALLENGE COURSE WITH 40 YD DASH	3/LS504
37	CUSTOM SHADE CANOPY	4/LS504
38	RECTANGULAR CUSTOM SHADE CANOPY	6/LS504
39	CIRCULAR SHADE CANOPY	7/LS504
40	PEDESTRIAN BRIDGE	1/LS505
41	PARK ENTRY SIGN	3/LS505
42	DUMPSTER ENCLOSURE	4/LS505
43	FIRE PLACE WITH TRELLIS STRUCTURE	5/LS505
44	METAL LIGHT STRUCTURE WITH FENCE	2/LS506
45	STEEL STRUCTURE WITH LARGE SWINGS	3/LS506
46	STEEL STRUCTURE WITH STAGE/LOUNGE	1/LS507
47	PARK BUILDING - SEE ARCHITECTURAL	
48	LARGE PAVILION WITH RESTROOMS & WATER FEATURE MECHANICAL - SEE ARCHITECTURAL	
49	INTERACTIVE WATER FEATURE - SEE WATER DESIGN	
50	TREE MONUMENT WITH CUBE LIGHTS (N.I.C.)	4/LS506
51	PLAYGROUND (N.I.C.)	
52	FARMERS MARKET TENT SPACES (N.I.C.)	
53	ENHANCED WETLANDS	
54	EXISTING CURB AND GUTTER	
55	EXISTING ADA RAMP	
56	EXISTING CONCRETE PLATFORM TO BE MODIFIED	
57	EXISTING STREAM	

SYMBOL	DESCRIPTION
	BELGARD PAVERS
	DECOMPOSED GRANITE
	ARTIFICIAL TURF
	POURED-IN-PLACE RUBBER SURFACING SUBGRADE

Scale: 1" = 20'-0"

0 10 20 40 60

blu line designs
planning | landscape architecture | desi

8719 S. Sandy Parkway
Sandy, UT 84070
p 801.913.7994

CLIENT

FARMINGTON CITY
CONTACT: SYLVIA CLARK
PH: 801.939.9295
EMAIL:
SCLARK@FARMINGTON.UTAH.GO

FARMINGTON

IVY ACRES PARK

1397 WEST COOK LANE
FARMINGTON, UT

REVISIONS

NO.	APPROVAL	DESCRIPTION

Stamp

STATE OF UTAH
CORY A. SHUPE
Licensed Landscape Architect
03/06/2024

Designed By:	BP
Drawn By:	BP, TH
Date:	03/06/2024
Checked By:	CS
Project No:	22-246

Drawing Title

SITE PLAN

Drawing number

LS102

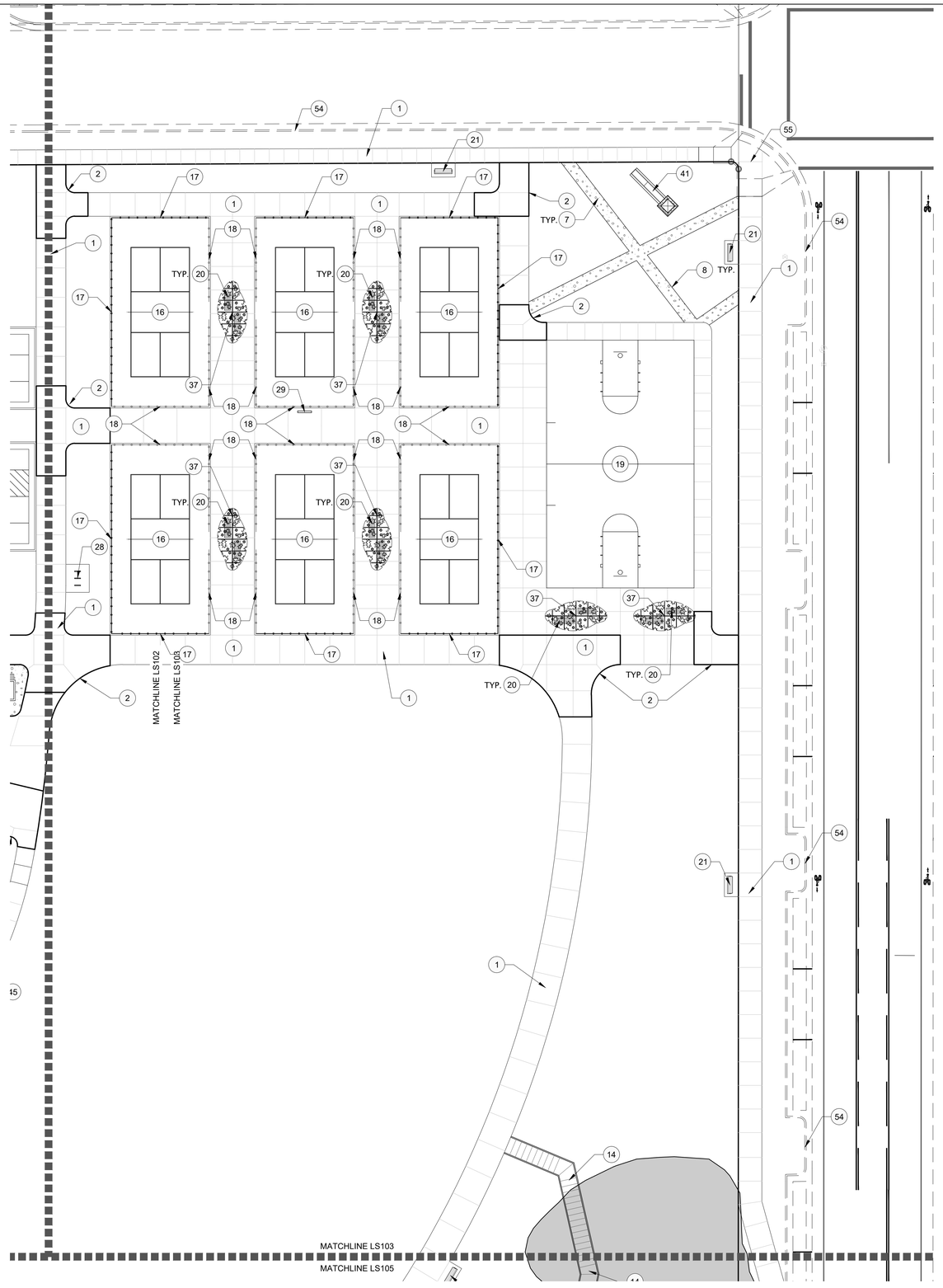

REFERENCE NOTES SCHEDULE

SYMBOL	DESCRIPTION	DETAIL
1	CONCRETE WALKWAY	
2	MONOLITHICALLY POURED SIDEWALK	1/LS501
3	BELGARD PAVERS - SEE LS401	2/LS501
4	6" CONCRETE EDGER	3/LS501
5	6" PLANTER CURB	4/LS501
6	12" CONCRETE CURB	6/LS501
7	DECOMPOSED GRANITE PATHS	7/LS501
8	ALUMINUM EDGING	8/LS501
9	PARKING LOT - SEE CIVIL	
10	CURB AND GUTTER - SEE CIVIL	
11	ADA RAMP - SEE CIVIL	
12	CONCRETE STAIRS	9/LS501
13	HAND RAIL	10/LS501
14	BOARDWALK WITH VIEWING PLATFORMS	2/LS502
15	BOARDWALK BRIDGE - BID ALTERNATE	2/LS502
16	PICKLEBALL COURTS - SEE LS402	
17	6' PICKLEBALL COURT EXTERIOR FENCE	7/LS502
18	4' INTERIOR PICKLEBALL COURT FENCE	8/LS502
19	BASKETBALL COURT - SEE LS402	
20	BACKLESS BENCH	10/LS502
21	BACKED BENCH	11/LS502
22	CIRCULAR BENCH	3/LS502
23	ADIRONDACK STYLE CHAIR	7/LS502
24	PEBBLE SEAT	10/LS502
25	LOW TABLE	4/LS503
26	CAFE TABLE AND CHAIRS	8/LS502
27	PICNIC TABLE	9/LS502
28	BICYCLE RACK	6/LS502
29	MARQUEE BOARD	8/LS503
30	CORNHOLE	9/LS503
31	NINE SQUARE	1/LS502
32	HAMMOCKING POLE	1/LS504
33	CLIMBING BOULDER	5/LS501
34	ARTIFICIAL TURF	2/LS505
35	POURED-IN-PLACE RUBBER SURFACING SUBGRADE	2/LS504
36	GAMETIME PRO 5000 CHALLENGE COURSE WITH 40 YD DASH	3/LS504
37	CUSTOM SHADE CANOPY	4/LS504
38	RECTANGULAR CUSTOM SHADE CANOPY	6/LS504
39	CIRCULAR SHADE CANOPY	7/LS504
40	PEDESTRIAN BRIDGE	1/LS505
41	PARK ENTRY SIGN	3/LS505
42	DUMPSTER ENCLOSURE	4/LS505
43	FIRE PLACE WITH TRELLIS STRUCTURE	5/LS505
44	METAL LIGHT STRUCTURE WITH FENCE	2/LS506
45	STEEL STRUCTURE WITH LARGE SWINGS	3/LS506
46	STEEL STRUCTURE WITH STAGE/LOUNGE	1/LS507
47	PARK BUILDING - SEE ARCHITECTURAL	
48	LARGE PAVILION WITH RESTROOMS & WATER FEATURE MECHANICAL - SEE ARCHITECTURAL	
49	INTERACTIVE WATER FEATURE - SEE WATER DESIGN	
50	TREE MONUMENT WITH CUBE LIGHTS (N.I.C.)	4/LS506
51	PLAYGROUND (N.I.C.)	
52	FARMERS MARKET TENT SPACES (N.I.C.)	
53	ENHANCED WETLANDS	
54	EXISTING CURB AND GUTTER	
55	EXISTING ADA RAMP	
56	EXISTING CONCRETE PLATFORM TO BE MODIFIED	
57	EXISTING STREAM	

SYMBOL	DESCRIPTION
	BELGARD PAVERS
	DECOMPOSED GRANITE
	ARTIFICIAL TURF
	POURED-IN-PLACE RUBBER SURFACING SUBGRADE

Scale: 1" = 20'-0"

0 10 20 40 60

blu line designs
planning | landscape architecture | desi

8719 S. Sandy Parkway
Sandy, UT 84070
p 801.913.7994

CLIENT

FARMINGTON CITY
CONTACT: SYLVIA CLARK
PH: 801.939.9295
EMAIL:
SCLARK@FARMINGTON.UTAH.GO

IVY ACRES PARK

1397 WEST COOK LANE
FARMINGTON, UT

REVISIONS

NO.	symmday	DESCRIPTION

Stamp

STATE OF UTAH
CORY A. SHUPE
Licensed Landscape Architect

03/06/2024

Designed By:	BP
Drawn By:	BP, TH
Date:	03/06/2024
Checked By:	CS
Project No:	22-246

Drawing Title

SITE PLAN

Drawing number

LS103

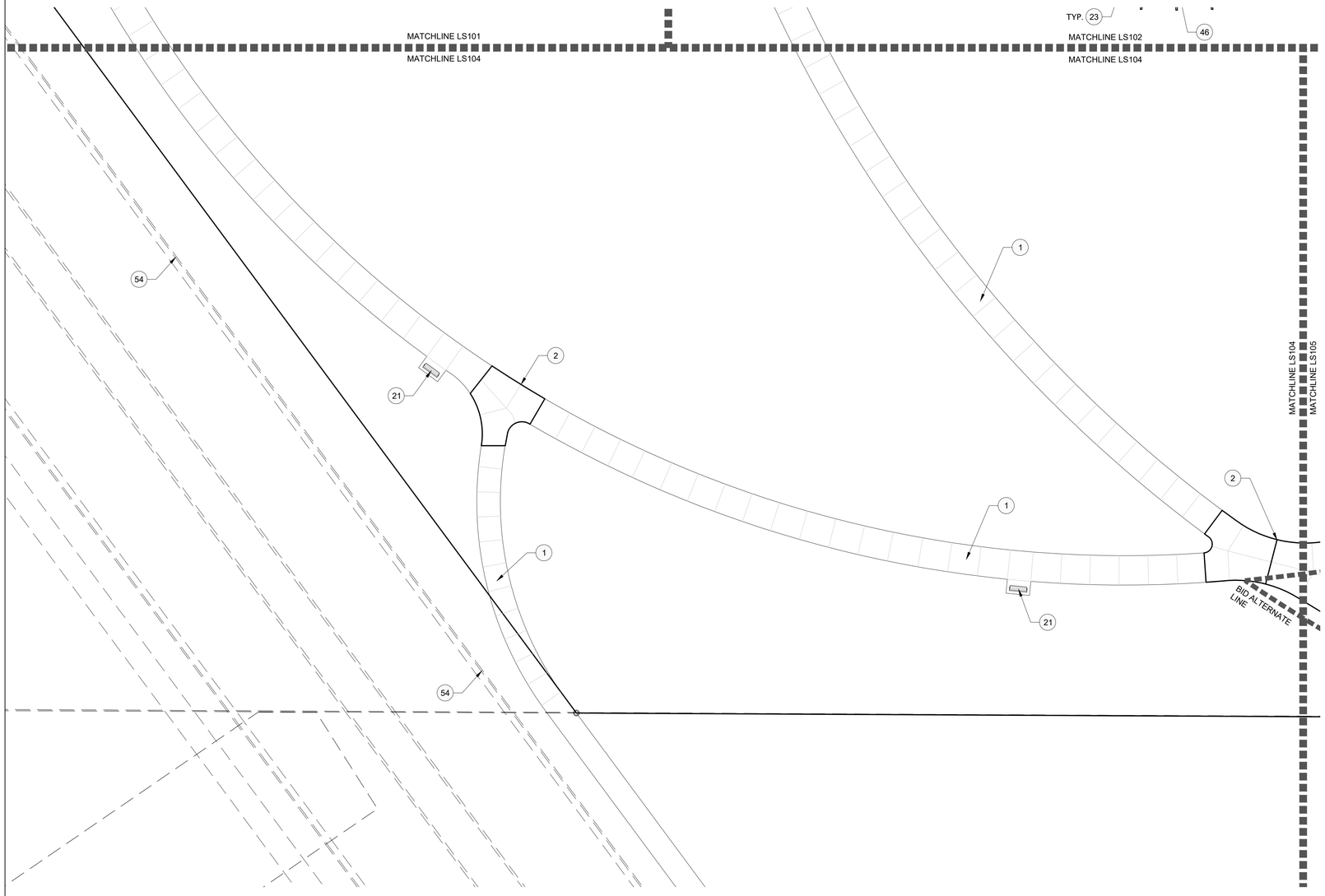

REFERENCE NOTES SCHEDULE

SYMBOL	DESCRIPTION	DETAIL
1	CONCRETE WALKWAY	
2	MONOLITHICALLY POURED SIDEWALK	1/LS501
3	BELGARD PAVERS - SEE LS401	2/LS501
4	6" CONCRETE EDGER	3/LS501
5	6" PLANTER CURB	4/LS501
6	12" CONCRETE CURB	6/LS501
7	DECOMPOSED GRANITE PATHS	7/LS501
8	ALUMINUM EDGING	8/LS501
9	PARKING LOT - SEE CIVIL	
10	CURB AND GUTTER - SEE CIVIL	
11	ADA RAMP - SEE CIVIL	
12	CONCRETE STAIRS	9/LS501
13	HAND RAIL	10/LS501
14	BOARDWALK WITH VIEWING PLATFORMS	2/LS502
15	BOARDWALK BRIDGE - BID ALTERNATE	2/LS502
16	PICKLEBALL COURTS - SEE LS402	
17	6' PICKLEBALL COURT EXTERIOR FENCE	7/LS502
18	4' INTERIOR PICKLEBALL COURT FENCE	8/LS502
19	BASKETBALL COURT - SEE LS402	
20	BACKLESS BENCH	10/LS502
21	BACKED BENCH	11/LS502
22	CIRCULAR BENCH	3/LS502
23	ADIRONDACK STYLE CHAIR	7/LS502
24	PEBBLE SEAT	10/LS502
25	LOW TABLE	4/LS503
26	CAFE TABLE AND CHAIRS	8/LS502
27	PICNIC TABLE	9/LS502
28	BICYCLE RACK	6/LS502
29	MARQUEE BOARD	8/LS503
30	CORNHOLE	9/LS503
31	NINE SQUARE	1/LS502
32	HAMMOCKING POLE	1/LS504
33	CLIMBING BOULDER	5/LS501
34	ARTIFICIAL TURF	2/LS505
35	POURED-IN-PLACE RUBBER SURFACING SUBGRADE	2/LS504
36	GAMETIME PRO 5000 CHALLENGE COURSE WITH 40 YD DASH	3/LS504
37	CUSTOM SHADE CANOPY	4/LS504
38	RECTANGULAR CUSTOM SHADE CANOPY	6/LS504
39	CIRCULAR SHADE CANOPY	7/LS504
40	PEDESTRIAN BRIDGE	1/LS505
41	PARK ENTRY SIGN	3/LS505
42	DUMPSTER ENCLOSURE	4/LS505
43	FIRE PLACE WITH TRELLIS STRUCTURE	5/LS505
44	METAL LIGHT STRUCTURE WITH FENCE	2/LS506
45	STEEL STRUCTURE WITH LARGE SWINGS	3/LS506
46	STEEL STRUCTURE WITH STAGE/LOUNGE	1/LS507
47	PARK BUILDING - SEE ARCHITECTURAL	
48	LARGE PAVILION WITH RESTROOMS & WATER FEATURE MECHANICAL - SEE ARCHITECTURAL	
49	INTERACTIVE WATER FEATURE - SEE WATER DESIGN	
50	TREE MONUMENT WITH CUBE LIGHTS (N.I.C.)	4/LS506
51	PLAYGROUND (N.I.C.)	
52	FARMERS MARKET TENT SPACES (N.I.C.)	
53	ENHANCED WETLANDS	
54	EXISTING CURB AND GUTTER	
55	EXISTING ADA RAMP	
56	EXISTING CONCRETE PLATFORM TO BE MODIFIED	
57	EXISTING STREAM	

SYMBOL	DESCRIPTION
	BELGARD PAVERS
	DECOMPOSED GRANITE
	ARTIFICIAL TURF
	POURED-IN-PLACE RUBBER SURFACING SUBGRADE

Scale: 1" = 20'-0"

0 10 20 40 60

N

blu line designs
planning | landscape architecture | desi

8719 S. Sandy Parkway
Sandy, UT 84070
p 801.913.7994

CLIENT

FARMINGTON CITY
CONTACT: SYLVIA CLARK
PH: 801.939.9295
EMAIL:
SCLARK@FARMINGTON.UTAH.GO

FARMINGTON

IVY ACRES PARK

1397 WEST COOK LANE
FARMINGTON, UT

REVISIONS

NO.	symmbol	DESCRIPTION

Stamp

STATE OF UTAH
CORY A. SHUPE
Licensed Landscape Architect

03/06/2024

Designed By:	BP
Drawn By:	BP, TH
Date:	03/06/2024
Checked By:	CS
Project No:	22-246

Drawing Title

SITE PLAN

Drawing number

LS104

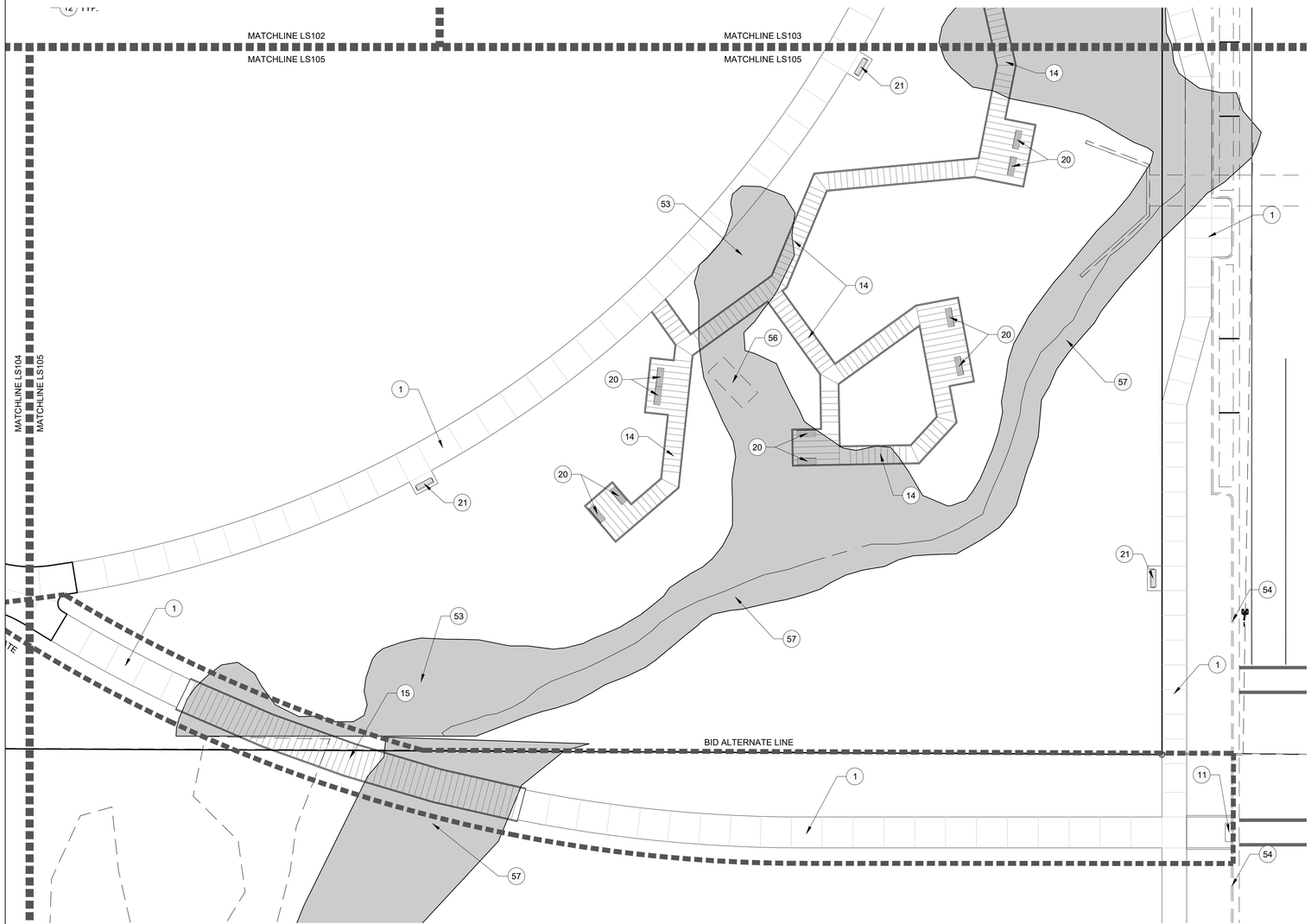

REFERENCE NOTES SCHEDULE

SYMBOL	DESCRIPTION	DETAIL
1	CONCRETE WALKWAY	
2	MONOLITHICALLY POURED SIDEWALK	1/LS501
3	BELGARD PAVERS - SEE LS401	2/LS501
4	6" CONCRETE EDGER	3/LS501
5	6" PLANTER CURB	4/LS501
6	12" CONCRETE CURB	6/LS501
7	DECOMPOSED GRANITE PATHS	7/LS501
8	ALUMINUM EDGING	8/LS501
9	PARKING LOT - SEE CIVIL	
10	CURB AND GUTTER - SEE CIVIL	
11	ADA RAMP - SEE CIVIL	
12	CONCRETE STAIRS	9/LS501
13	HAND RAIL	10/LS501
14	BOARDWALK WITH VIEWING PLATFORMS	2/LS502
15	BOARDWALK BRIDGE - BID ALTERNATE	2/LS502
16	PICKLEBALL COURTS - SEE LS402	
17	6' PICKLEBALL COURT EXTERIOR FENCE	7/LS502
18	4' INTERIOR PICKLEBALL COURT FENCE	8/LS502
19	BASKETBALL COURT - SEE LS402	
20	BACKLESS BENCH	10/LS502
21	BACKED BENCH	11/LS502
22	CIRCULAR BENCH	3/LS502
23	ADIRONDACK STYLE CHAIR	7/LS502
24	PEBBLE SEAT	10/LS502
25	LOW TABLE	4/LS503
26	CAFE TABLE AND CHAIRS	8/LS502
27	PICNIC TABLE	9/LS502
28	BICYCLE RACK	6/LS502
29	MARQUEE BOARD	8/LS503
30	CORNHOLE	9/LS503
31	NINE SQUARE	1/LS502
32	HAMMOCKING POLE	1/LS504
33	CLIMBING BOULDER	5/LS501
34	ARTIFICIAL TURF	2/LS505
35	POURED-IN-PLACE RUBBER SURFACING SUBGRADE	2/LS504
36	GAMETIME PRO 5000 CHALLENGE COURSE WITH 40 YD DASH	3/LS504
37	CUSTOM SHADE CANOPY	4/LS504
38	RECTANGULAR CUSTOM SHADE CANOPY	6/LS504
39	CIRCULAR SHADE CANOPY	7/LS504
40	PEDESTRIAN BRIDGE	1/LS505
41	PARK ENTRY SIGN	3/LS505
42	DUMPSTER ENCLOSURE	4/LS505
43	FIRE PLACE WITH TRELLIS STRUCTURE	5/LS505
44	METAL LIGHT STRUCTURE WITH FENCE	2/LS506
45	STEEL STRUCTURE WITH LARGE SWINGS	3/LS506
46	STEEL STRUCTURE WITH STAGE/LOUNGE	1/LS507
47	PARK BUILDING - SEE ARCHITECTURAL	
48	LARGE PAVILION WITH RESTROOMS & WATER FEATURE MECHANICAL - SEE ARCHITECTURAL	
49	INTERACTIVE WATER FEATURE - SEE WATER DESIGN	
50	TREE MONUMENT WITH CUBE LIGHTS (N.I.C.)	4/LS506
51	PLAYGROUND (N.I.C.)	
52	FARMERS MARKET TENT SPACES (N.I.C.)	
53	ENHANCED WETLANDS	
54	EXISTING CURB AND GUTTER	
55	EXISTING ADA RAMP	
56	EXISTING CONCRETE PLATFORM TO BE MODIFIED	
57	EXISTING STREAM	

SYMBOL	DESCRIPTION
	BELGARD PAVERS
	DECOMPOSED GRANITE
	ARTIFICIAL TURF
	POURED-IN-PLACE RUBBER SURFACING SUBGRADE

Scale: 1" = 20'-0"

0 10 20 40 60

blu line designs
planning | landscape architecture | desi
8719 S. Sandy Parkway
Sandy, UT 84070
p 801.913.7994

CLIENT

FARMINGTON CITY
CONTACT: SYLVIA CLARK
PH: 801.939.9295
EMAIL:
SCLARK@FARMINGTON.UTAH.GO

FARMINGTON

IVY ACRES PARK

1397 WEST COOK LANE
FARMINGTON, UT

REVISIONS

NO.	symmetry	DESCRIPTION

Stamp

STATE OF UTAH
CORY A. SHUPE
Licensed Landscape Architect
03/06/2024

Designed By:	BP
Drawn By:	BP, TH
Date:	03/06/2024
Checked By:	CS
Project No:	22-246

Drawing Title

SITE PLAN

Drawing number

LS105

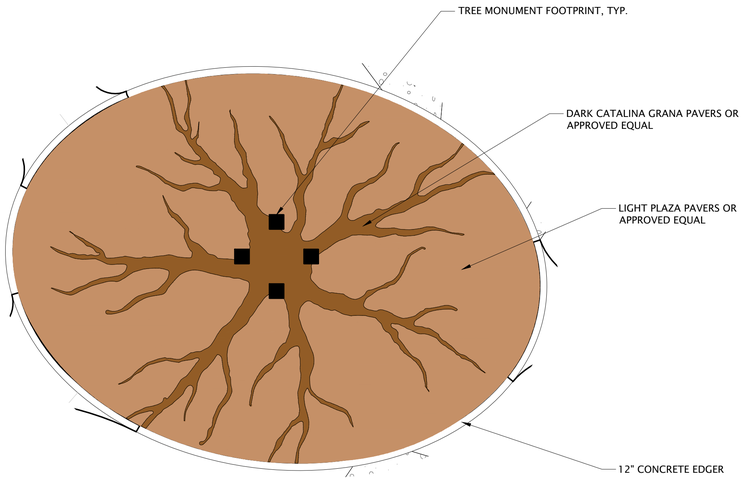

NOTES:
1. LAYOUT IS DIAGRAMMATIC. CITY TO REVIEW AND APPROVE PAVER PATTERNS PRIOR TO CONSTRUCTION.
2. INSTALL PER BELGARD SPECIFICATIONS.

1 BELGARD PAVERS TYPES ENLARGEMENT

SCALE: 1"=10'-0"

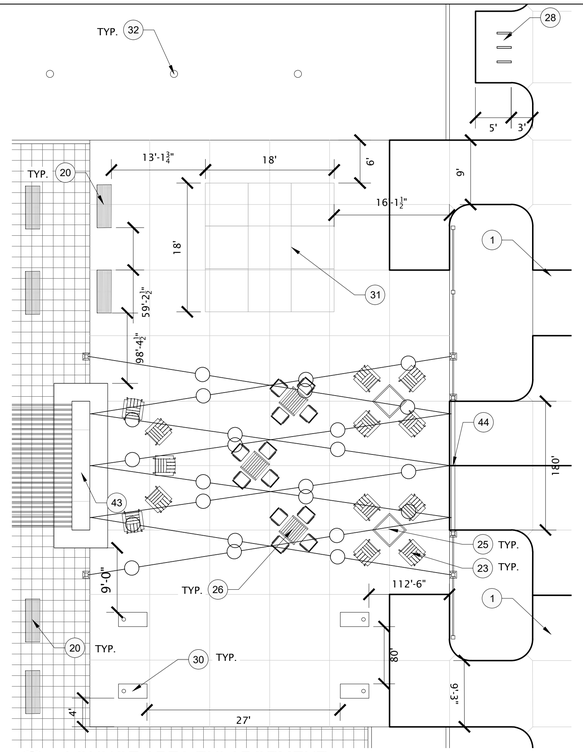

2 LOUNGE AREA ENLARGEMENT

SCALE: 1"=10'-0"

NOTES:
1. INSTALL PER MANUFACTURER'S SPECIFICATIONS.
2. COLORS OF TURF, CLIMBING BOULDERS, AND NINJA WARRIOR COURSE TO BE SELECTED BY CITY.

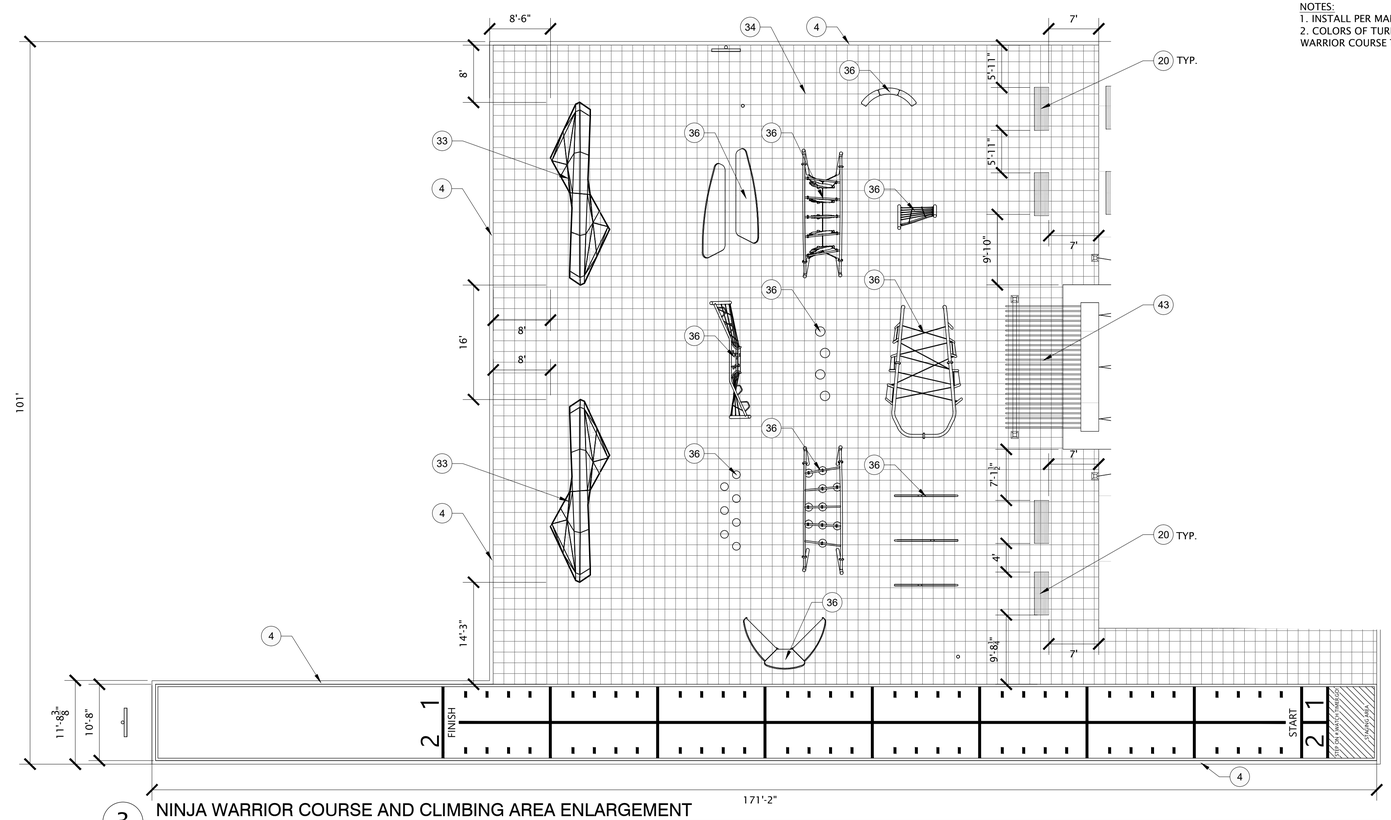

3 NINJA WARRIOR COURSE AND CLIMBING AREA ENLARGEMENT

SCALE: 1"=20'-0"

REFERENCE NOTES SCHEDULE

SYMBOL	DESCRIPTION	DETAIL
1	CONCRETE WALKWAY	
2	MONOLITHICALLY POURED SIDEWALK	1/LS501
3	BELGARD PAVERS - SEE LS401	2/LS501
4	6" CONCRETE EDGER	3/LS501
5	6" PLANTER CURB	4/LS501
6	12" CONCRETE CURB	6/LS501
7	DECOMPOSED GRANITE PATHS	7/LS501
8	ALUMINUM EDGING	8/LS501
9	PARKING LOT - SEE CIVIL	
10	CURB AND GUTTER - SEE CIVIL	
11	ADA RAMP - SEE CIVIL	
12	CONCRETE STAIRS	9/LS501
13	HAND RAIL	10/LS501
14	BOARDWALK WITH VIEWING PLATFORMS	2/LS502
15	BOARDWALK BRIDGE - BID ALTERNATE	2/LS502
16	PICKLEBALL COURTS - SEE LS402	
17	6' PICKLEBALL COURT EXTERIOR FENCE	7/LS502
18	4' INTERIOR PICKLEBALL COURT FENCE	8/LS502
19	BASKETBALL COURT - SEE LS402	
20	BACKLESS BENCH	10/LS502
21	BACKED BENCH	11/LS502
22	CIRCULAR BENCH	3/LS502
23	ADIRONDACK STYLE CHAIR	7/LS502
24	PEBBLE SEAT	10/LS502
25	LOW TABLE	4/LS503
26	CAFE TABLE AND CHAIRS	8/LS502
27	PICNIC TABLE	9/LS502
28	BICYCLE RACK	6/LS502
29	MARQUEE BOARD	8/LS503
30	CORNHOLE	9/LS503
31	NINE SQUARE	1/LS502
32	HAMMOCKING POLE	1/LS504
33	CLIMBING BOULDER	5/LS501
34	ARTIFICIAL TURF	2/LS505
35	POURED-IN-PLACE RUBBER SURFACING SUBGRADE	2/LS504
36	GAMETIME PRO 5000 CHALLENGE COURSE WITH 40 YD DASH	3/LS504
37	CUSTOM SHADE CANOPY	4/LS504
38	RECTANGULAR CUSTOM SHADE CANOPY	6/LS504
39	CIRCULAR SHADE CANOPY	7/LS504
40	PEDESTRIAN BRIDGE	1/LS505
41	PARK ENTRY SIGN	3/LS505
42	DUMPSTER ENCLOSURE	4/LS505
43	FIRE PLACE WITH TRELLIS STRUCTURE	5/LS505
44	METAL LIGHT STRUCTURE WITH FENCE	2/LS506
45	STEEL STRUCTURE WITH LARGE SWINGS	3/LS506
46	STEEL STRUCTURE WITH STAGE/LOUNGE	1/LS507
47	PARK BUILDING - SEE ARCHITECTURAL	
48	LARGE PAVILION WITH RESTROOMS & WATER FEATURE MECHANICAL - SEE ARCHITECTURAL	
49	INTERACTIVE WATER FEATURE - SEE WATER DESIGN	
50	TREE MONUMENT WITH CUBE LIGHTS (N.I.C.)	4/LS506
51	PLAYGROUND (N.I.C.)	
52	FARMERS MARKET TENT SPACES (N.I.C.)	
53	ENHANCED WETLANDS	
54	EXISTING CURB AND GUTTER	
55	EXISTING ADA RAMP	
56	EXISTING CONCRETE PLATFORM TO BE MODIFIED	
57	EXISTING STREAM	

SYMBOL	DESCRIPTION
	BELGARD PAVERS
	DECOMPOSED GRANITE
	ARTIFICIAL TURF
	POURED-IN-PLACE RUBBER SURFACING SUBGRADE

Scale: 1" = 10'-0"
0 5 10 20 30

blu line designs
planning | landscape architecture | design
8719 S. Sandy Parkway
Sandy, UT 84070
p 801.913.7994

CLIENT
FARMINGTON CITY
CONTACT: SYLVIA CLARK
PH: 801.939.9295
EMAIL:
SCLARK@FARMINGTON.UTAH.GOV

IVY ACRES PARK

1397 WEST COOK LANE
FARMINGTON, UT

REVISIONS

NO.	symbol	DESCRIPTION

Stamp
STATE OF UTAH
CORY A. SHUPE
License#
Licensed Landscape Architect
03/06/2024

Designed By:	BP
Drawn By:	BP, TH
Date:	03/06/2024
Checked By:	CS
Project No:	22-246

Drawing Title
SITE PLAN ENLARGEMENTS

Drawing number
LS401

NOTES:
1. COURT SURFACING COLORS TO BE REVIEWED AND APPROVED BY OWNER.

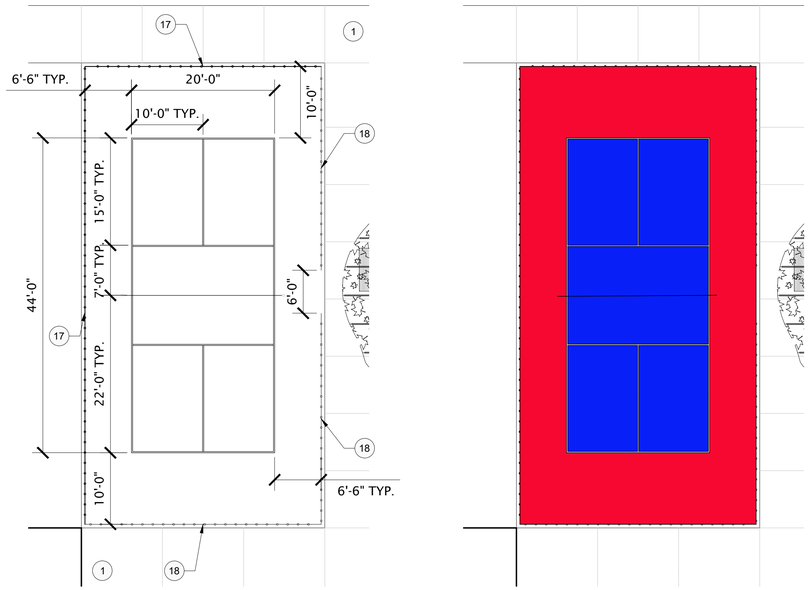

1 PICKLEBALL COURT ENLARGEMENTS

SCALE: 1"=10'-0"

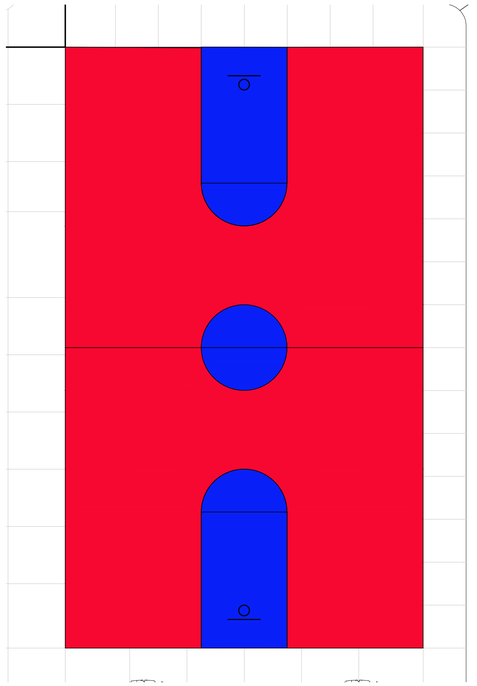

2 BASKETBALL COURT ENLARGEMENT

SCALE: 1"=10'-0"

REFERENCE NOTES SCHEDULE

SYMBOL	DESCRIPTION	DETAIL
1	CONCRETE WALKWAY	
2	MONOLITHICALLY POURED SIDEWALK	1/LS501
3	BELGARD PAVERS - SEE LS401	2/LS501
4	6" CONCRETE EDGER	3/LS501
5	6" PLANTER CURB	4/LS501
6	12" CONCRETE CURB	6/LS501
7	DECOMPOSED GRANITE PATHS	7/LS501
8	ALUMINUM EDGING	8/LS501
9	PARKING LOT - SEE CIVIL	
10	CURB AND GUTTER - SEE CIVIL	
11	ADA RAMP - SEE CIVIL	
12	CONCRETE STAIRS	9/LS501
13	HAND RAIL	10/LS501
14	BOARDWALK WITH VIEWING PLATFORMS	2/LS502
15	BOARDWALK BRIDGE - BID ALTERNATE	2/LS502
16	PICKLEBALL COURTS - SEE LS402	
17	6' PICKLEBALL COURT EXTERIOR FENCE	7/LS502
18	4' INTERIOR PICKLEBALL COURT FENCE	8/LS502
19	BASKETBALL COURT - SEE LS402	
20	BACKLESS BENCH	10/LS502
21	BACKED BENCH	11/LS502
22	CIRCULAR BENCH	3/LS502
23	ADIRONDACK STYLE CHAIR	7/LS502
24	PEBBLE SEAT	10/LS502
25	LOW TABLE	4/LS503
26	CAFE TABLE AND CHAIRS	8/LS502
27	PICNIC TABLE	9/LS502
28	BICYCLE RACK	6/LS502
29	MARQUEE BOARD	8/LS503
30	CORNHOLE	9/LS503
31	NINE SQUARE	1/LS502
32	HAMMOCKING POLE	1/LS504
33	CLIMBING BOULDER	5/LS501
34	ARTIFICIAL TURF	2/LS505
35	POURED-IN-PLACE RUBBER SURFACING SUBGRADE	2/LS504
36	GAMETIME PRO 5000 CHALLENGE COURSE WITH 40 YD DASH	3/LS504
37	CUSTOM SHADE CANOPY	4/LS504
38	RECTANGULAR CUSTOM SHADE CANOPY	6/LS504
39	CIRCULAR SHADE CANOPY	7/LS504
40	PEDESTRIAN BRIDGE	1/LS505
41	PARK ENTRY SIGN	3/LS505
42	DUMPSTER ENCLOSURE	4/LS505
43	FIRE PLACE WITH TRELLIS STRUCTURE	5/LS505
44	METAL LIGHT STRUCTURE WITH FENCE	2/LS506
45	STEEL STRUCTURE WITH LARGE SWINGS	3/LS506
46	STEEL STRUCTURE WITH STAGE/LOUNGE	1/LS507
47	PARK BUILDING - SEE ARCHITECTURAL	
48	LARGE PAVILION WITH RESTROOMS & WATER FEATURE MECHANICAL - SEE ARCHITECTURAL	
49	INTERACTIVE WATER FEATURE - SEE WATER DESIGN	
50	TREE MONUMENT WITH CUBE LIGHTS (N.I.C.)	4/LS506
51	PLAYGROUND (N.I.C.)	
52	FARMERS MARKET TENT SPACES (N.I.C.)	
53	ENHANCED WETLANDS	
54	EXISTING CURB AND GUTTER	
55	EXISTING ADA RAMP	
56	EXISTING CONCRETE PLATFORM TO BE MODIFIED	
57	EXISTING STREAM	

SYMBOL	DESCRIPTION
	BELGARD PAVERS
	DECOMPOSED GRANITE
	ARTIFICIAL TURF
	POURED-IN-PLACE RUBBER SURFACING SUBGRADE

Scale: 1" = 10'-0"

0 5 10 20 30

n

blu line designs
planning | landscape architecture | desi

8719 S. Sandy Parkway
Sandy, UT 84070
p 801.913.7994

CLIENT

FARMINGTON CITY
CONTACT: SYLVIA CLARK
PH: 801.939.9295
EMAIL:
SCLARK@FARMINGTON.UTAH.GO

FARMINGTON

IVY ACRES PARK

1397 WEST COOK LANE
FARMINGTON, UT

REVISIONS

NO.	yy/mm/dd	DESCRIPTION

Stamp

STATE OF UTAH
CORY A. SHUPE
Licensed Landscape Architect

03/06/2024

Designed By:	BP
Drawn By:	BP, TH
Date:	03/06/2024
Checked By:	CS
Project No:	22-246

Drawing Title

SITE PLAN ENLARGEMENTS

Drawing number

LS402

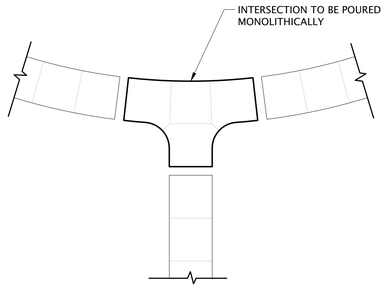

NOTES:
1. INTERSECTING CONCRETE WALKWAYS SHALL BE POURED AT SAME TIME.
2. SCORING SHOULD DONE AS INDICATED ON LS SERIES SITE PLANS, UNLESS OTHERWISE SPECIFIED OR APPROVED. SEE 3/C400 FOR TYPICAL EXPANSION JOINT SPACING AND SCORE JOINT SPACING. SCORE JOINTS ARE SAW CUT.
3. COLD JOINTS MAY OCCUR AT TERMINATION OF MONOLITHICALLY POURED SECTIONS WHERE INDIVIDUAL WALKWAYS CONTINUE.
4. ABOVE DRAWING IS ONLY A REPRESENTATION OF A POTENTIAL INTERSECTION CONDITION AND DOES NOT REPRESENT ALL INTERSECTION TYPES.

1 MONOLITHICALLY POURED SIDEWALK

SCALE: NOT TO SCALE

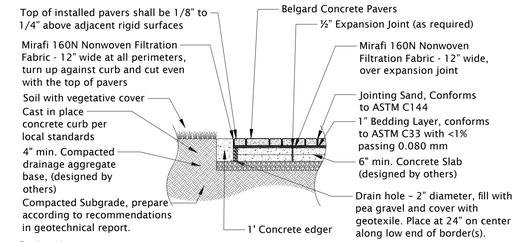

Design Notes:
1. Cross section as shown is suitable for pedestrian and vehicular applications. Paver dimensions subject to aspect and plan ratio requirements. Contact Belgard Commercial for product selection guidance based on the intended traffic loading.
2. Depth of aggregate base subject to site specific conditions (traffic loading, soil conditions, groundwater levels, climatic conditions). Contact Belgard Commercial for design assistance.
3. Additional drain holes may be required depending on the size of the pavement area. The rule of thumb is to have at least one drain hole per 500 square feet of surface area. Storm drains should be used at low spots.
4. Drain pipes may be required within the aggregate base depending on the permeability of the subgrade soils. Verify drainage needs with the geotechnical engineer. Ensure drain pipes are able to daylight via gravity flow to surface, or connect to catch basin.
5. Ensure the geotextile above the drain hole has good drainage characteristics and is not prone to clogging.
6. Techniseal HP Nextgel jointing sand conforming to ASTM C144 may be used in pedestrian and light vehicular applications. Please contact Belgard Commercial for design assistance.
7. Minimum 2% slope to drainage feature.

2 BELGARD STANDARD PAVER ON CONCRETE BASE

NOT TO SCALE

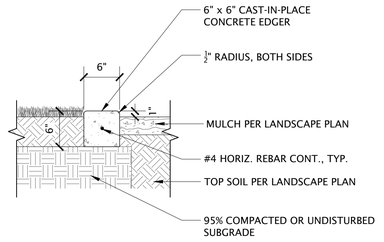

NOTES:
1. EDGER TO BE FLUSH WITH ADJACENT WALK, PATH, PAVEMENT OR CURB.
2. ALL LAYOUT AND FORM WORK TO BE APPROVED BY OWNER PRIOR TO PLACING CONCRETE.
3. CONCRETE TO MEET ALL CITY SPECIFICATIONS.
4. PLACE EXPANSION JOINTS @ 30' O.C., CONTROL JOINTS @ 10' O.C. UNLESS OTHERWISE SHOWN ON PLAN.
5. ALL CURVES IN EDGER TO BE TANGENT TO EACH OTHER AND STRAIGHT SECTIONS OF CURB.
6. CONCRETE EDGER TO BE FORMED AND CAST IN PLACE, NOT PRE-CAST OR EXTRUDED.

3 6" CONCRETE EDGER

NOT TO SCALE

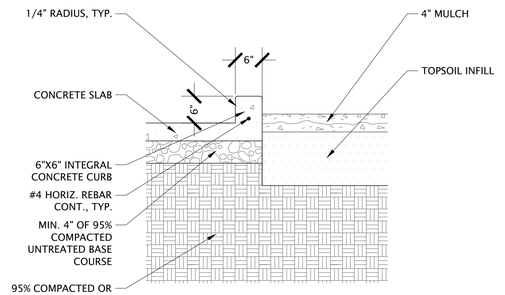

NOTES:
1. PLANTER CURB SHALL BE POURED INTEGRAL AND MONOLITHICALLY WITH THE ADJACENT SIDEWALK.
2. INSTALL SCORE JOINTS IN PLANTER CURB TO ALIGN WITH ADJACENT SIDEWALK SCORING.

4 6" PLANTER CURB

3/4" = 1'-0"

P-22-246-96



NOTES:
1. PLANTER CURB SHALL BE POURED INTEGRAL AND MONOLITHICALLY WITH THE ADJACENT SIDEWALK.
2. INSTALL SCORE JOINTS IN PLANTER CURB TO ALIGN WITH ADJACENT SIDEWALK SCORING.

5 6" PLANTER CURB IN DECOMPOSED GRANITE

3/4" = 1'-0"

P-22-246-122

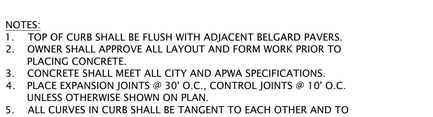

NOTES:
1. TOP OF CURB SHALL BE FLUSH WITH ADJACENT BELGARD PAVERS.
2. OWNER SHALL APPROVE ALL LAYOUT AND FORM WORK PRIOR TO PLACING CONCRETE.
3. CONCRETE SHALL MEET ALL CITY AND APWA SPECIFICATIONS.
4. PLACE EXPANSION JOINTS @ 30' O.C., CONTROL JOINTS @ 10' O.C. UNLESS OTHERWISE SHOWN ON PLAN.
5. ALL CURVES IN CURB SHALL BE TANGENT TO EACH OTHER AND TO STRAIGHT SECTIONS OF CURB.

6 12" CONCRETE EDGER

1" = 1'-0"

P-22-246-78

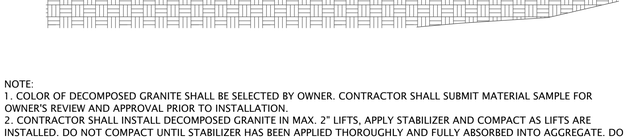

NOTE:
1. COLOR OF DECOMPOSED GRANITE SHALL BE SELECTED BY OWNER. CONTRACTOR SHALL SUBMIT MATERIAL SAMPLE FOR OWNER'S REVIEW AND APPROVAL PRIOR TO INSTALLATION.
2. CONTRACTOR SHALL INSTALL DECOMPOSED GRANITE IN MAX. 2" LIFTS, APPLY STABILIZER AND COMPACT AS LIFTS ARE INSTALLED. DO NOT COMPACT UNTIL STABILIZER HAS BEEN APPLIED THOROUGHLY AND FULLY ABSORBED INTO AGGREGATE. DO NOT OVER SATURATE, BUT DO NOT ALLOW STABILIZER TO COMPLETELY DRY BEFORE COMPACTING EITHER. COMPACT SURFACE LAYER TO 95% OR GREATER COMPACTION. FOR FINAL LIFT, APPLY A TOPCOAT OF STABILIZER 24 HOURS AFTER THE FIRST APPLICATION WHEN SURFACE IS COMPLETELY DRY AND HARD.

7 DECOMPOSED GRANITE

SCALE: NOT TO SCALE

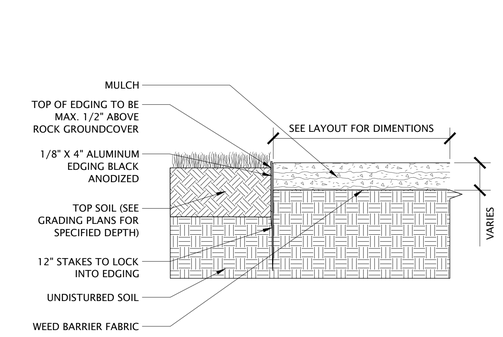

8 4" ALUMINUM EDGING TYP.

NOT TO SCALE

P-22-246-80

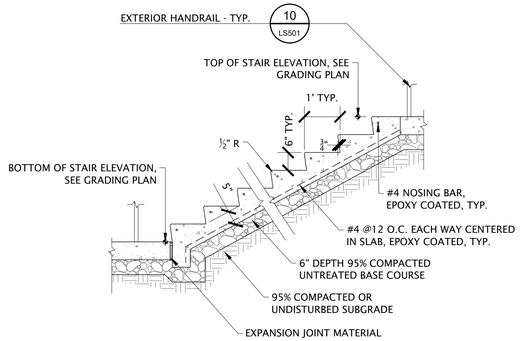

9 EXTERIOR CONCRETE STAIR - TYP.

SCALE:NOT TO SCALE

P-22-246-48

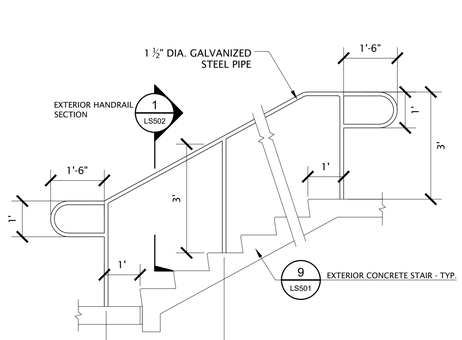

NOTES:
1. RAILING SHALL BE HAVE A POWDERCOATED FINISH.
2. COLOR TO BE SELECTED BY OWNER.

10 EXTERIOR HANDRAIL - TYP.

SCALE: NOT TO SCALE

P-22-246-47

blu line designs
planning | landscape architecture | desi
8719 S. Sandy Parkway
Sandy, UT 84070
p 801.913.7994

CLIENT

FARMINGTON CITY
CONTACT: SYLVIA CLARK
PH: 801.939.9295
EMAIL:
SCLARK@FARMINGTON.UTAH.GO

IVY ACRES PARK

1397 WEST COOK LANE
FARMINGTON, UT

REVISIONS

NO.	symmbol	DESCRIPTION

Stamp

STATE OF UTAH
CORY A. SHUPE
Licensed Landscape Architect

03/06/2024

Designed By:	BP
Drawn By:	BP, TH
Date:	03/06/2024
Checked By:	CS
Project No:	22-246

Drawing Title

SITE PLAN DETAILS

Drawing number

LS501

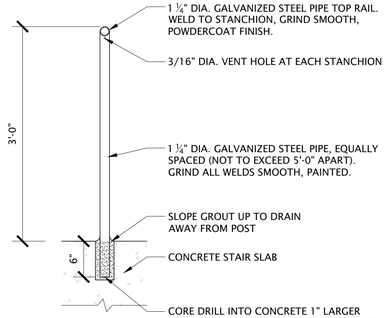

1 EXTERIOR HANDRAIL SECTION

SCALE: 1" = 1'-0" P-22-246-66

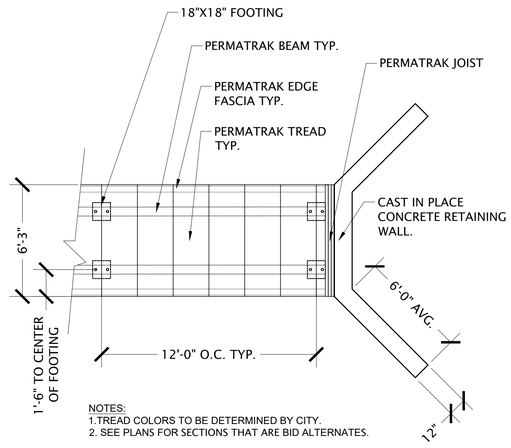

NOTES:
1.TREAD COLORS TO BE DETERMINED BY CITY.
2. SEE PLANS FOR SECTIONS THAT ARE BID ALTERNATES.

2 BOARDWALK PLAN VIEW DETAIL

SCALE: NOT TO SCALE P-22-246-29

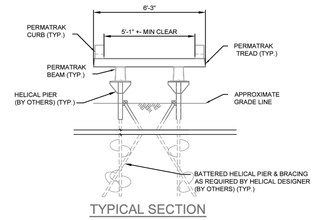

TYPICAL SECTION

SCALE: NOT TO SCALE

NOTES:
1. INSTALL PER MANUFACTURER'S SPECIFICATIONS.
2. SEE PLANS FOR SECTIONS THAT ARE BID ALTERNATES.

3 PERMATRACK BOARDWALK SECTION

SCALE: NOT TO SCALE P-22-246-113

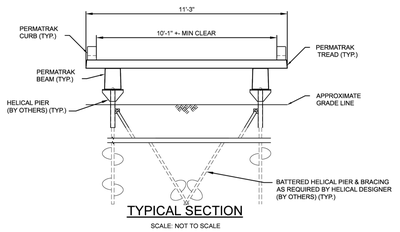

TYPICAL SECTION

SCALE: NOT TO SCALE

NOTE:
1. INSTALL PER MANUFACTURER'S SPECIFICATIONS.

4 PERMATRACK BRIDGE SECTION - BID ALTERNATE

SCALE: NOT TO SCALE P-22-246-115

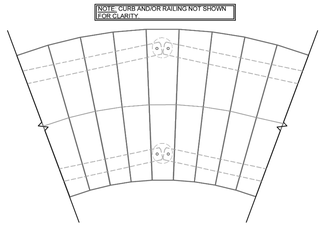

TYPICAL SKEW DETAIL

NOTES:
1. INSTALL PER MANUFACTURER'S SPECIFICATIONS.
2. SEE PLANS FOR SECTIONS THAT ARE BID ALTERNATES.

5 PERMATRACK TYPICAL SKEW DETAIL

SCALE: NOT TO SCALE P-22-246-114

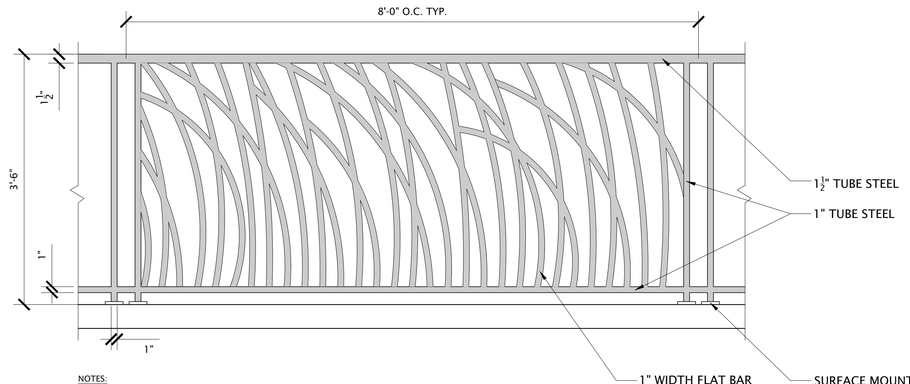

NOTES:
1. RAILING TO BE MADE OF BLACK POWDERCOATED STEEL.
2. CONTRACTOR TO SUBMIT SHOP DRAWINGS FOR APPROVAL PRIOR TO FABRICATION.
3. RAILING TO BE SURFACE MOUNTED TO BOARDWALK.
4. RAILING TO BE IN COMPLIANCE WITH FARMINGTON CITY STANDARDS.
5. COORDINATE WITH PERMATRAK BOARDWALK COMPANY FOR SURFACE MOUNTING HOLES.

6 BOARDWALK RAILING - BID ALTERNATE

1" = 1'-0" P-22-246-116

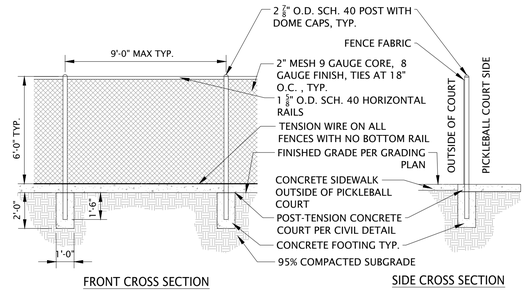

FRONT CROSS SECTION SIDE CROSS SECTION

NOTES
1. ALL PICKLEBALL FENCE POSTS, RAILS, CLAMPS AND HARDWARE SHALL BE POWDERCOATED BLACK.
2. ALL PICKLEBALL CHAINLINK MESH SHALL BE FUSED AND BONDED BLACK VINYL COATED.
3. PATTERN AND COLOR OF FENCE FABRIC TO BE CHOSEN BY CITY.

7 PICKLEBALL COURT PERIMETER FENCE - 6' TALL

SCALE:NOT TO SCALE P-22-246-17

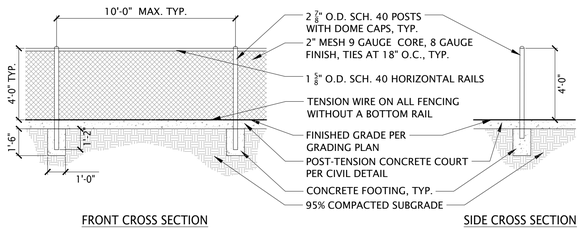

FRONT CROSS SECTION SIDE CROSS SECTION

NOTES
1. ALL PICKLEBALL FENCE POSTS, RAILS, CLAMPS AND HARDWARE SHALL BE POWDERCOATED BLACK.
2. ALL PICKLEBALL CHAIN LINK MESH SHALL BE FUSED AND BONDED BLACK VINYL COATED.

8 PICKLEBALL COURT INTERIOR FENCE - 4' TALL

SCALE:NOT TO SCALE P-22-246-19

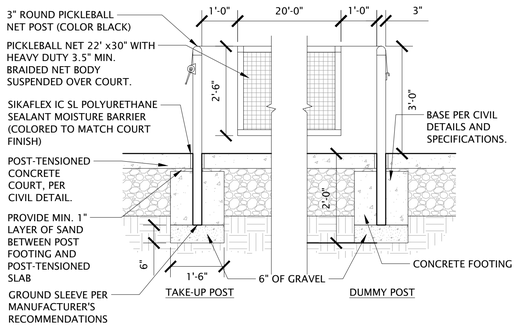

PICKLEBALL COURT NOTES:
1. CONTRACTOR SHALL CONSULT MANUFACTURER FOR RECOMMENDED INSTALLATION OF NET POSTS AND SHALL CONSULT WITH OWNER ON VARIATIONS FROM DETAIL.
2. VERTICAL AND HORIZONTAL LOCATIONS OF NET POSTS ON THE COURT SURFACE SHALL BE IN ACCORDANCE WITH THE INTERNATIONAL FEDERATION OF PICKLEBALL (IFP) OFFICIAL TOURNAMENT RULE BOOK.
3. NETS AND POSTS SHALL BE PER SPECIFICATIONS.

9 PICKLEBALL NET AND POSTS

SCALE:NOT TO SCALE P-22-246-18

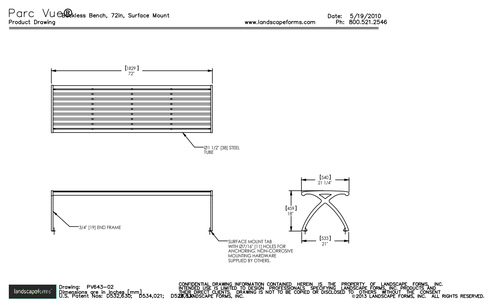

NOTES:
1. TO BE OWNER PROVIDED AND CONTRACTOR INSTALLED.
2. BACKLESS BENCH TO BE LANDSCAPE FORMS PARC VUE MODEL OR APPROVED EQUAL.
3. BACKLESS 6' BENCH
4. COLOR AS SELECTED BY OWNER.

CONTACT:
BRYCE WARD
LANDSCAPE FORMS INC.
BRYCEW@LANDSCAPEFORMS.COM

10 BACKLESS BENCH

SCALE: NOT TO SCALE P-22-246-109

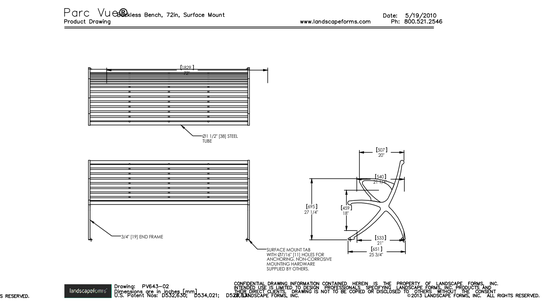

NOTES:
1. TO BE OWNER PROVIDED AND CONTRACTOR INSTALLED.
2. BACKED BENCH TO BE LANDSCAPE FORMS PARC VUE MODEL OR APPROVED EQUAL.
3. BACKED 6' BENCH
4. COLOR TO BE SELECTED BY OWNER.

CONTACT:
BRYCE WARD
LANDSCAPE FORMS INC.
BRYCEW@LANDSCAPEFORMS.COM

11 BACKED BENCH

SCALE: NOT TO SCALE P-22-246-110

blu line designs
planning | landscape architecture | design
8719 S. Sandy Parkway
Sandy, UT 84070
p 801.913.7994

CLIENT

FARMINGTON CITY
CONTACT: SYLVIA CLARK
PH: 801.939.9295
EMAIL:
SCLARK@FARMINGTON.UTAH.GO

FARMINGTON

IVY ACRES PARK

1397 WEST COOK LANE
FARMINGTON, UT

REVISIONS

NO.	symmdate	DESCRIPTION

Stamp

STATE OF UTAH
CORY A. SHUPE
LICENSED LANDSCAPE ARCHITECT
03/06/2024

Designed By:	BP
Drawn By:	BP, TH
Date:	03/06/2024
Checked By:	CS
Project No:	22-246

Drawing Title

SITE PLAN DETAILS

Drawing number

LS502



NOTES:
1. TO BE OWNER PROVIDED AND CONTRACTOR INSTALLED.
2. CIRCULAR BENCH TO BE VICTOR STANLEY MODEL NRB-4. NRB-90 VERSION OR APPROVED EQUAL.
3. 6'-9" DIAMETER BENCH WITH BACK, NO ARMS, & VERTICAL SLATS. IN-GROUND MOUNT.
4. INSTALL PER MANUFACTURER'S SPECIFICATIONS.
5. COLOR TO BE DETERMINED BY CITY.

1 CIRCULAR BENCH

SCALE:NOT TO SCALE P-22-246-51



NOTES:
1. TO BE OWNER PROVIDED AND CONTRACTOR INSTALLED.
2. LOUNGE FURNITURE SEATING SHALL BE LANDSCAPE FORMS AMERICANA LOUNGE CHAIR OR APPROVED EQUAL.
3. SURFACE MOUNT PER MANUFACTURER'S SPECIFICATIONS.

CONTACT: BRYCE WARD
LANDSCAPE FORMS INC.
BRYCEW@LANDSCAPEFORMS.COM

2 ADIRONDACK STYLE CHAIR

SCALE: NOT TO SCALE P-22-246-61

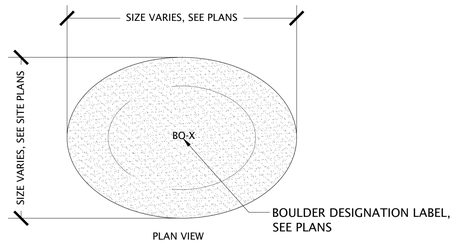

NOTES:
1. PEBBLE SEAT SHALL BE PIKUS BOLIDE OVAL OR APPROVED EQUAL.
2. TO BE PURCHASED AND INSTALLED BY CONTRACTOR PER MANUFACTURERS INSTRUCTIONS.
3. FINISH AND COLORS TO BE DETERMINED BY OWNER.

BOULDER NAME	QUANTITY
BOLIDE 3 (BO3)	3
BOLIDE 4 (BO 4)	9
BOLIDE 5 (BO 5)	1

3 PEBBLE SEAT

SCALE: NOT TO SCALE P-22-246-71



NOTES:
1. TO BE OWNER PROVIDED AND CONTRACTOR INSTALLED.
2. LOW TABLE TO BE LANDSCAPE FORMS MORRISON TABLE OR APPROVED EQUAL..
3. COLOR AS SELECTED BY CITY.
4. SURFACE MOUNT PER MANUFACTURER'S INSTRUCTIONS.

4 LOW TABLE

SCALE: NOT TO SCALE P-22-246-107



NOTES:
1. TO BE OWNER PROVIDED AND CONTRACTOR INSTALLED.
2. CAFE TABLE SHALL BE ANOVA TUSCANY 36" TABLE AND MATCHING BAR HEIGHT TUSCANY CHAIRS OR APPROVED EQUAL.
3. TO BE PURCHASED AND INSTALLED BY CONTRACTOR PER MANUFACTURERS INSTRUCTIONS.
4. SLATS TO BE RECYCLED PLASTIC. FINISH AND COLORS OF SLATS AND METAL PARTS TO BE SELECTED BY CITY.

5 CAFE TABLE AND CHAIRS

SCALE: NOT TO SCALE P-22-246-58



NOTES:
1. TO BE OWNER PROVIDED AND CONTRACTOR INSTALLED.
2. PICNIC TABLE SHALL BE LANDSCAPE FORMS GRETCHEN PICNIC TABLE OR APPROVED EQUAL.
3. MATERIAL/COLOR SHALL BE DRIFTWOOD POLYSITE.
4. SURFACE MOUNT

CONTACT: BRYCE WARD
LANDSCAPE FORMS INC
BRYCEW@LANDSCAPEFORMS.COM

6 PICNIC TABLE

SCALE: NOT TO SCALE P-22-246-36



NOTES:
1. TO BE OWNER PROVIDED AND CONTRACTOR INSTALLED.
2. BICYCLE RACK SHALL BE EDGETYRE BIKE RACK FROM MMCITE, MODEL #STE110 OR APPROVED EQUAL.
3. MATERIAL: AS SELECTED BY CITY.
4. COLOR: AS SELECTED BY CITY.
5. INSTALL PER MANUFACTURER'S SPECIFICATIONS.

7 BICYCLE RACK

SCALE: NOT TO SCALE P-22-246-35



NOTES
1. TO BE OWNER PROVIDED AND CONTRACTOR INSTALLED.
2. TO BE KIRBY BUILT MODEL: AMC3006 OR APPROVED EQUAL.
3. SINGLE SIDED WITH TWO IN-GROUND POSTS.
4. COLOR AS SELECTED BY OWNER.

8 MARQUEE BOARD

SCALE: NOT TO SCALE P-22-246-108

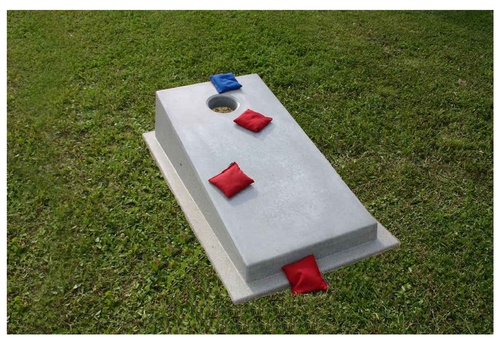

NOTES:
1. CORNHOLE TO BE DOTY & SONS CONCRETE PRODUCTS MODEL: BYOB5531 OR APPROVED EQUAL.
2. REGULATION SIZE, POLISHED CONCRETE. CUSTOM LOGOS AVAILABLE AS ADDITIONAL FEATURE.
3. COLOR AND LOGO: AS SELECTED BY OWNER.

9 CORNHOLE

SCALE:NOT TO SCALE P-22-246-97

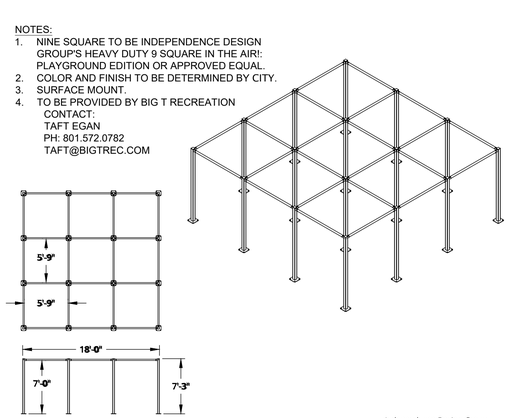

NOTES:
1. NINE SQUARE TO BE INDEPENDENCE DESIGN GROUP'S HEAVY DUTY 9 SQUARE IN THE AIR!: PLAYGROUND EDITION OR APPROVED EQUAL.
2. COLOR AND FINISH TO BE DETERMINED BY CITY.
3. SURFACE MOUNT.
4. TO BE PROVIDED BY BIG T RECREATION
CONTACT:
TAFT EGAN
PH: 801.572.0782
TAFT@BIGTREC.COM

Independence Design Group
Heavy Duty
9 Square in the Air!:
Playground Edition

10 NINE SQUARE

SCALE: NOT TO SCALE P-22-209-23

SUMMIT BOULDER
12 feet high Urban Boulders



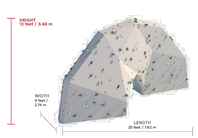

NOTES:
1. CLIMBING BOULDER TO BE TREKFIT'S SUMMIT BOULDER OR APPROVED EQUAL.
2. COLORS TO BE SELECTED BY CITY
3. INSTALL PER MANUFACTURER'S SPECIFICATIONS.
4. TO BE PROVIDED BY LUCKY DOG RECREATION
CONTACT: LYNETTE TURNER
LYNETTE@LUCKYDREC.COM
208.652.7926

11 CLIMBING BOULDER

SCALE: NOT TO SCALE P-22-246-99

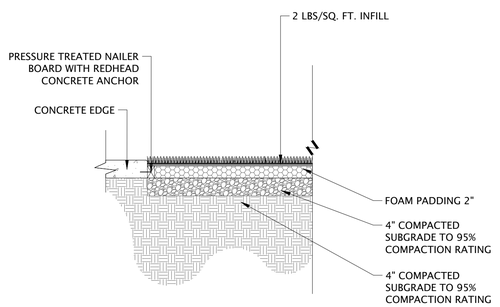

NOTES:
1. ARTIFICIAL TURF TO BE ROCKY MOUNTAIN "GO PLAY" OR APPROVED EQUAL.
2. ARTIFICIAL TURF MUST BE INSTALLED AND SEAMED WITH ADJACENT PIECES RUNNING IN THE SAME DIRECTION.
3. CONTRACTOR TO INSTALL PER MANUFACTURERS SPECIFICATIONS

12 ARTIFICIAL TURF

SCALE: 1/2" = 1'-0" P-22-246-41

blu line designs
planning | landscape architecture | desi
8719 S. Sandy Parkway
Sandy, UT 84070
p 801.913.7994

CLIENT
FARMINGTON CITY
CONTACT: SYLVIA CLARK
PH: 801.939.9295
EMAIL:
SCLARK@FARMINGTON.UTAH.GO

FARMINGTON

IVY ACRES PARK

1397 WEST COOK LANE
FARMINGTON, UT

REVISIONS

NO.	symmdate	DESCRIPTION

Stamp
STATE OF UTAH
CORY A. SHUPE
Licensed Landscape Architect
03/06/2024

Designed By:	BP
Drawn By:	BP, TH
Date:	03/06/2024
Checked By:	CS
Project No:	22-246

Drawing Title
SITE PLAN DETAILS

Drawing number
LS503

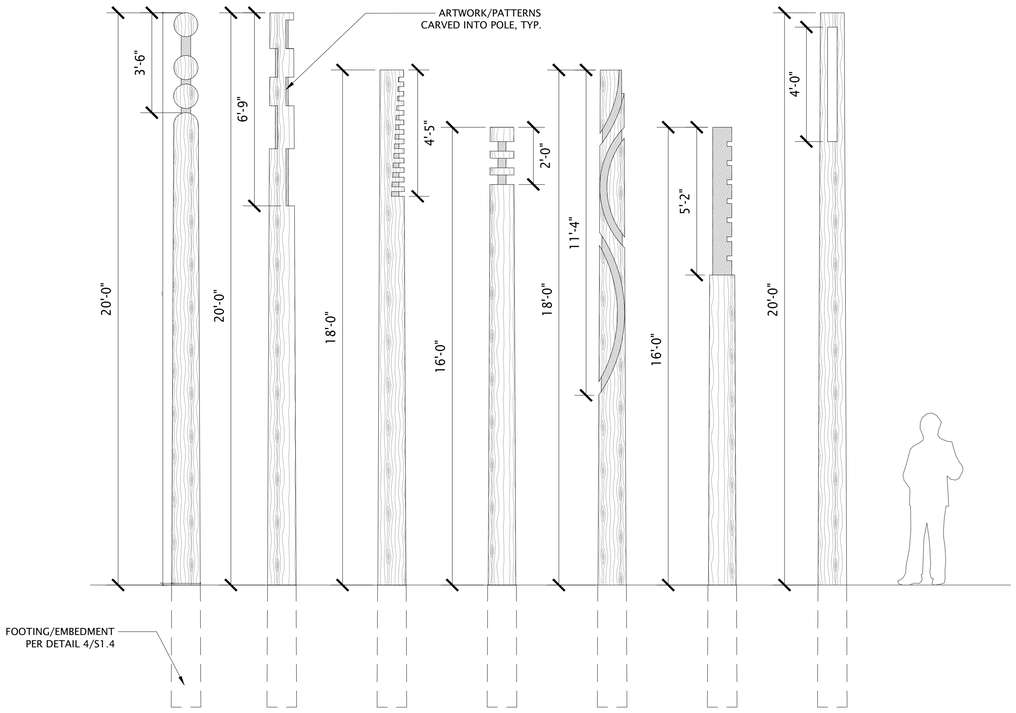

NOTES:
1. ALL POLES SHALL BE PRESSURE TREATED DOUGLAS FIR, WESTERN RED CEDAR OR SOUTHERN PINE AS APPROVED BY OWNER.
2. POLES SHALL BE 12" DIA. TAPERED POLES.
3. DESIGNS SHOWN ARE SUGGESTIVE AND SCHEMATIC IN NATURE. CONTRACTOR SHALL CONTRACT WITH JIM VALENTINE TO CREATE POLES. FINAL SHOP DRAWINGS FOR POLES SHALL BE SUBMITTED TO OWNER FOR REVIEW AND APPROVAL PRIOR TO FABRICATION.
4. CONTRACTOR SHALL PROVIDE STAMPED STRUCTURAL SUBMITTAL FOR POLE FOOTINGS/EMBEDMENT & CONNECTION DETAIL FOR OWNER REVIEW AND APPROVAL. POLES SHALL BE ABLE TO SUPPORT SLACK LINE AND HAMMOCK CONNECTION.
5. JIM VALENTINE
801.637.0329
JIMVALENTINE9@GMAIL.COM

1 HAMMOCK/SLACK LINE POLE

SCALE: 1" = 30' P-22-246-34

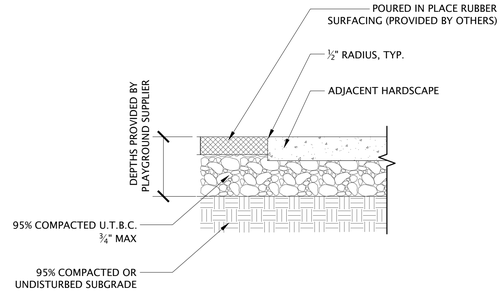

NOTES:
1. CONTRACTOR SHALL COORDINATE NECESSARY SUB-GRADING WITH OWNER/ENGINEER TO ESTABLISH CORRECT GRADES.
2. CONTRACTOR TO ESTABLISH COMPACTED BASE IN PREPARATION FOR PLAYGROUND SUPPLIER. POURED-IN-PLACE RUBBER SURFACING TO BE PROVIDED BY OTHERS.
3. PLAYGROUND SUPPLIER IS BIG T RECREATION.
CONTACT: TAFT EGAN
PH: 801.572.0782
EMAIL: TAFT@BIGTREC.COM

2 PLAYGROUND SURFACING

SCALE: 1" = 1'-0" P-22-246-75

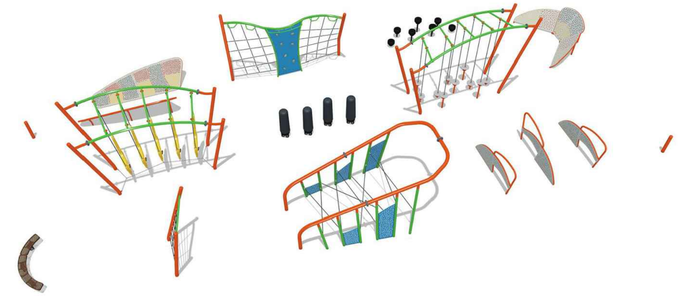

NOTES:
1. NINJA WARRIOR COURSE TO BE GAMETIME'S PRO 5000 NINJA WARRIOR COURSE, MODEL #13644 OR APPROVED EQUAL.
2. INSTALL PER MANUFACTURER'S SPECIFICATIONS.

3 NINJA WARRIOR COURSE

SCALE: NOT TO SCALE P-22-246-98

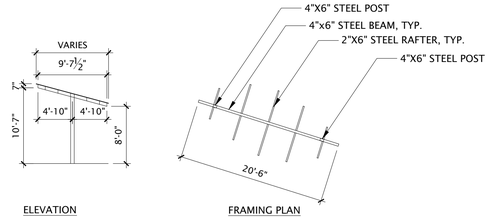

CUSTOM SHADE CANOPY NOTES:
1. ICON MODEL #81553.
2. FINAL ARTWORK FOR CUSTOM CUT OUTS IN SHADE CANOPIES SHALL BE PROVIDED BY LANDSCAPE ARCHITECT. VERIFY AND COORDINATE PATTERNS PRIOR TO FABRICATION.
3. SHADE CANOPY'S COLOR TO BE SELECTED BY OWNER.
4. SHADE CANOPIES SHALL BE PROVIDED BY ICON SHELTER SYSTEMS OR APPROVED EQUAL. CONTACT: BIG T RECREATION, TAFT EGAN, 801.808.5006.

4 CUSTOM SHADE CANOPY

SCALE: 1" = 10'

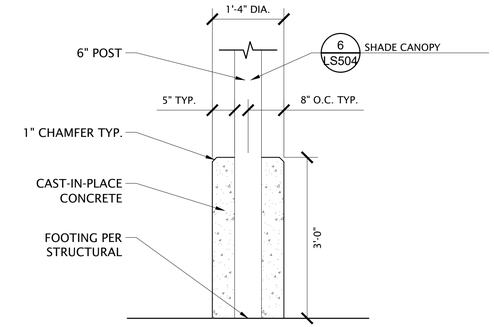

NOTES:
1. FINISH SHALL BE ARCHITECTURAL.
2. POSTS IN WATER FEATURE TO BE WATERPROOFED WITH XYPEX.

5 COLUMN BASE

SCALE: 3/4" = 1'-0" P-22-246-120

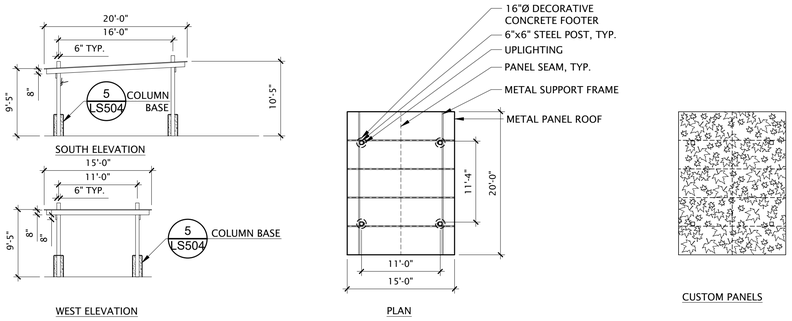

CUSTOM SHADE CANOPY NOTES:
1. ICON MODEL #81566.
2. BASE BID: METAL PANEL ROOF SHALL BE STANDARD PERFORATED METAL PANELS, SIZE AND PATTERN AS SHOWN. BID ALTERNATE: METAL PANEL ROOF SHALL BE CUSTOM CUT PANELS, PATTERN AS SHOWN.
3. FINAL ARTWORK FOR CUSTOM CUT OUTS IN SHADE CANOPIES SHALL BE PROVIDED BY LANDSCAPE ARCHITECT. VERIFY AND COORDINATE PATTERNS PRIOR TO FABRICATION.
4. SHADE CANOPY'S COLOR TO BE SELECTED BY CITY.
5. SHADE CANOPIES SHALL BE PROVIDED BY ICON SHELTER SYSTEMS OR APPROVED EQUAL. CONTACT: BIG T RECREATION, TAFT EGAN - 801-808-5006.

6 RECTANGULAR CUSTOM SHADE CANOPY

SCALE: 1" = 10' P-22-246-72

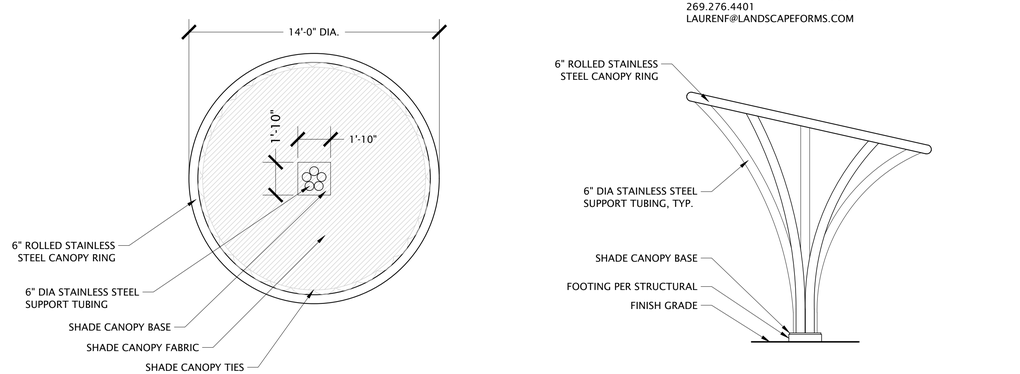

NOTES:
1. STUDIO 431 MODEL #SF4876-001.
2. SHADE CANOPY FABRIC COLOR TO BE DETERMINED BY CITY.
3. FOOTING TO BE INSTALLED BY CONTRACTOR PER MANUFACTURER'S STRUCTURAL SPECIFICATIONS.
4. CONTACT: LAUREN FRANCISCO
269.276.4401
LAURENF@LANDSCAPEFORMS.COM

7 CIRCULAR SHADE CANOPY

1/4" = 1'-0" P-22-246-121

blu line designs
planning | landscape architecture | desi
8719 S. Sandy Parkway
Sandy, UT 84070
p 801.913.7994

CLIENT
FARMINGTON CITY
CONTACT: SYLVIA CLARK
PH: 801.939.9295
EMAIL:
SCLARK@FARMINGTON.UTAH.GO

IVY ACRES PARK

1397 WEST COOK LANE
FARMINGTON, UT

REVISIONS

NO.	symmbol	DESCRIPTION

Stamp
STATE OF UTAH
CORY A. SHUPE
Licensed Landscape Architect
03/06/2024

Designed By:	BP
Drawn By:	BP, TH
Date:	03/06/2024
Checked By:	CS
Project No:	22-246

Drawing Title
SITE PLAN DETAILS

Drawing number
LS504

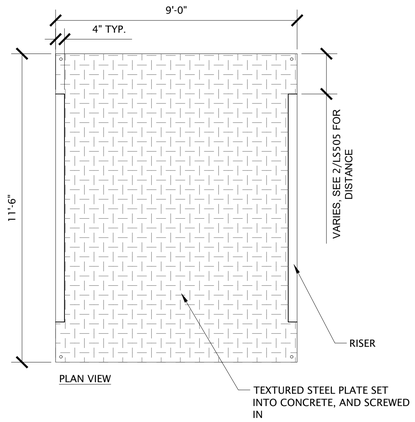

NOTES:
1. BRIDGES TO BE MADE OF GALVANIZED STEEL. COLOR AND FINISH TO BE SELECTED BY CITY.
2. STEEL PLATE TEXTURE PATTERN TO BE SELECTED BY CITY.
3. CONTRACTOR TO SUBMIT SHOP DRAWINGS FOR REVIEW AND APPROVAL PRIOR TO FABRICATION.

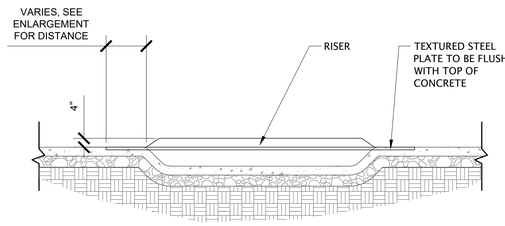

1 PEDESTRIAN BRIDGE

3/8" = 1'-0"

P-22-246-118

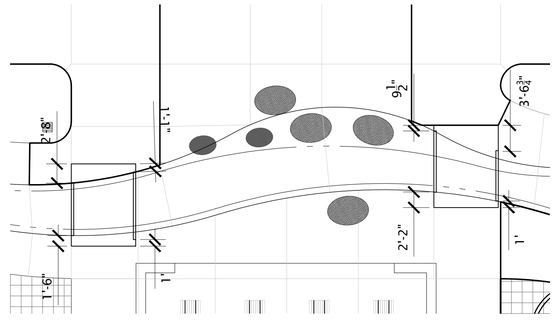

2 PEDESTRIAN BRIDGES ENLARGEMENT

SCALE: 1"=10'-0"

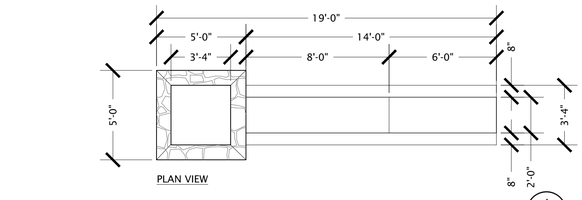

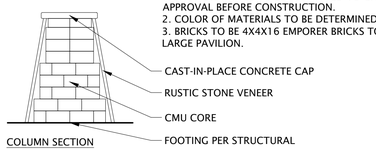

NOTES:
1. SHOP DRAWINGS TO BE SUBMITTED TO CITY FOR APPROVAL BEFORE CONSTRUCTION.
2. COLOR OF MATERIALS TO BE DETERMINED BY CITY.
3. BRICKS TO BE 4X4X16 EMPORER BRICKS TO MATCH LARGE PAVILION.

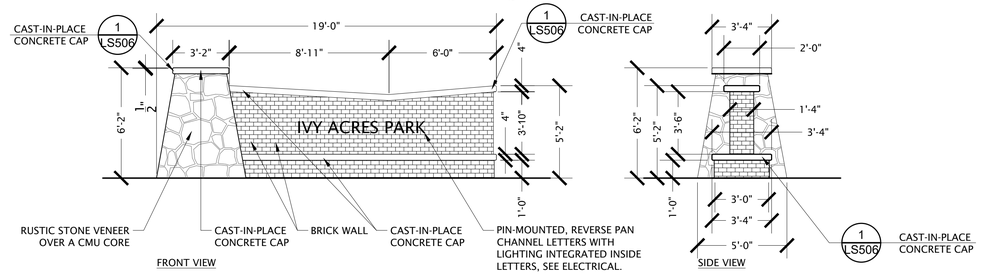

3 PARK ENTRY SIGN

SCALE: 1/4" = 1'-0"

P-22-246-101

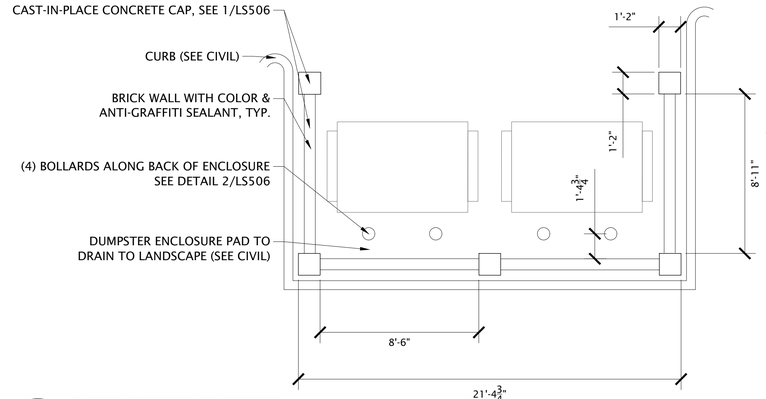

NOTES:
1. BRICKS TO BE 4X4X6 EMPORER BRICKS TO MATCH PAVILION. SEE ARCHITECTURAL.

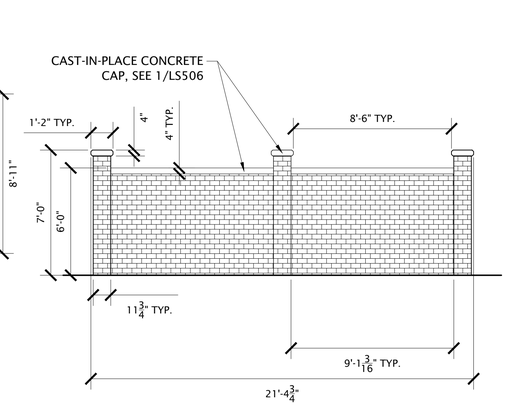

4 DUMPSTER ENCLOSURE

SCALE: NOT TO SCALE

P-22-246-50

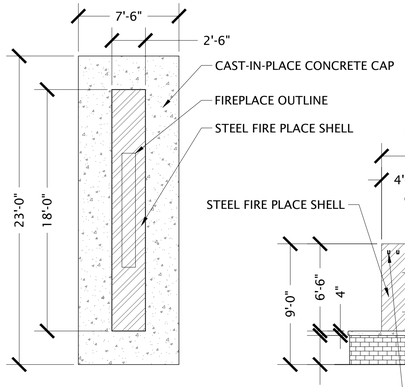

NOTES:
1. CONTRACTOR TO PROVIDE SHOP AND STRUCTURAL DRAWINGS FOR OWNER REVIEW AND APPROVAL PRIOR TO INSTALLATION.
2. OWNER TO APPROVE COLORS PRIOR TO INSTALLATION.
3. BRICKS TO BE 4X4X16 EMPORER BRICKS TO MATCH LARGE PAVILION.
4. FIREPLACE SHELL TO BE TRI-STATE METAL ROOFING SUPPLY'S OUTDOOR NON-VENTED FLAT/NO TEXTURE WITH WOOD GRAIN FINISH, SEE ARCHITECTURAL.
4. FIREPLACE TO BE COMFORT SOLUTION'S FLARE-VST-100-H.
CONTACT: AARON BRENTEL
PH: 801.558.6863

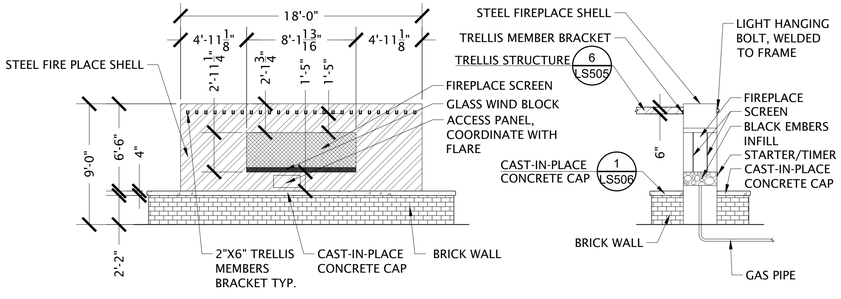

PLAN VIEW

ELEVATION VIEW

SECTION VIEW

5 FIREPLACE

3/16" = 1'-0"

P-22-246-105

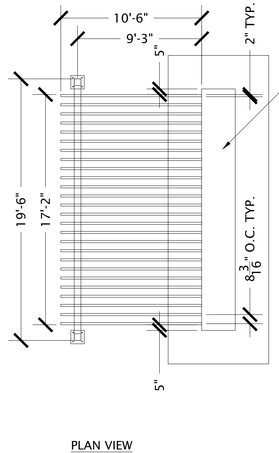

NOTES:
1. ICON MODEL #81555.
2. SEE STRUCTURAL FOR INSTALLATION
3. OWNER TO APPROVE FINISH COLORS PRIOR TO INSTALLATION.
4. INSTALL PER MANUFACTURER'S SPECIFICATIONS.

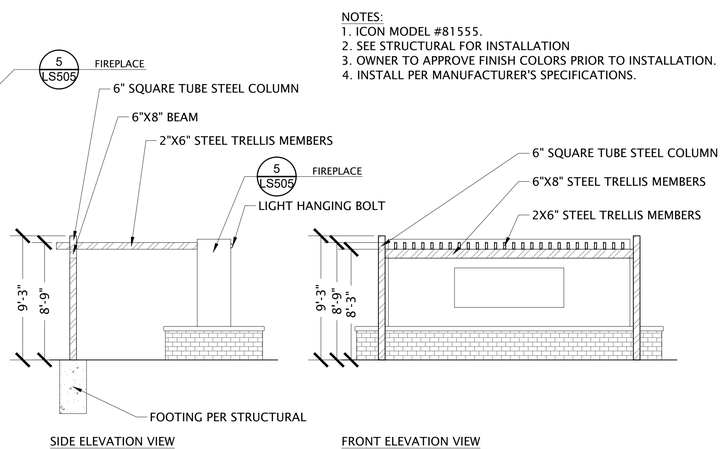

PLAN VIEW

SIDE ELEVATION VIEW

FRONT ELEVATION VIEW

6 TRELLIS STRUCTURE

3/16" = 1'-0"

P-22-246-106

blu line designs
planning | landscape architecture | desi
8719 S. Sandy Parkway
Sandy, UT 84070
p 801.913.7994

CLIENT

FARMINGTON CITY
CONTACT: SYLVIA CLARK
PH: 801.939.9295
EMAIL:
SCLARK@FARMINGTON.UTAH.GO

IVY ACRES PARK

1397 WEST COOK LANE
FARMINGTON, UT

REVISIONS

NO.	symmday	DESCRIPTION

Stamp

STATE OF UTAH
CORY A. SHUPE
Licensed Landscape Architect
03/06/2024

Designed By:	BP
Drawn By:	BP, TH
Date:	03/06/2024
Checked By:	CS
Project No:	22-246

Drawing Title

SITE PLAN DETAILS

Drawing number

LS505

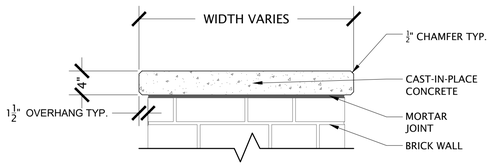

NOTES:
1. CONCRETE TO BE INTEGRALLY COLORED GRAY. OWNER TO APPROVE COLOR BEFORE FABRICATION.
2. CAP TO HAVE SMOOTH TROWEL FINISH.
3. IF CAP IS RECTANGULAR, THE JOINTS ARE TO BE EVERY 4'.
4. CONTRACTOR TO PROVIDE SHOP DRAWINGS PRIOR TO FABRICATION FOR OWNER APPROVAL.

1 CAST-IN-PLACE CONCRETE CAP

SCALE: NOT TO SCALE

P-22-246-119

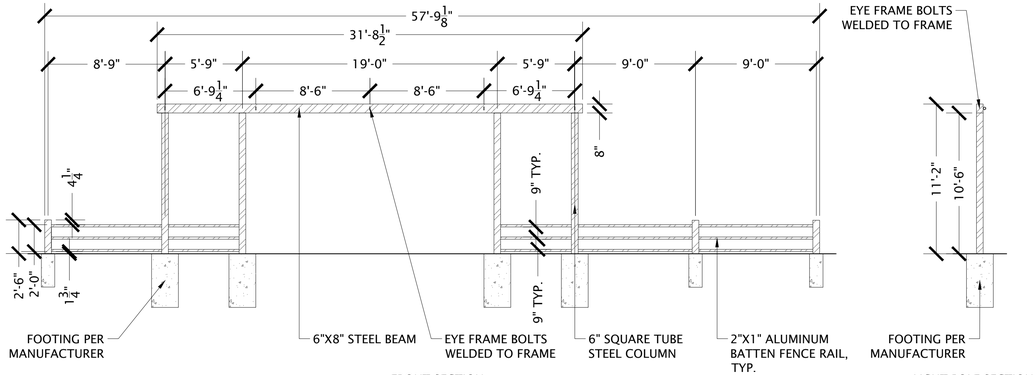

NOTES:
1. ICON MODEL #81567.
2. RAILS TO BE AL13 12' BATTENS-1WX5D TO MATCH PAVILION BUILDING, SEE ARCHITECTURAL.
3. STEEL MEMBER'S COLOR TO BE DETERMINED BY OWNER.

2 METAL LIGHT STRUCTURE WITH FENCE

3/16" = 1'-0"

P-22-246-104

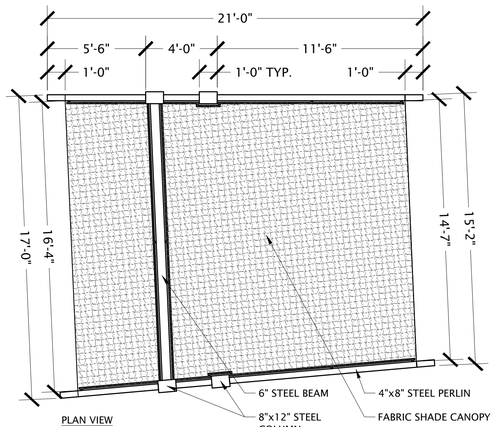

PLAN VIEW

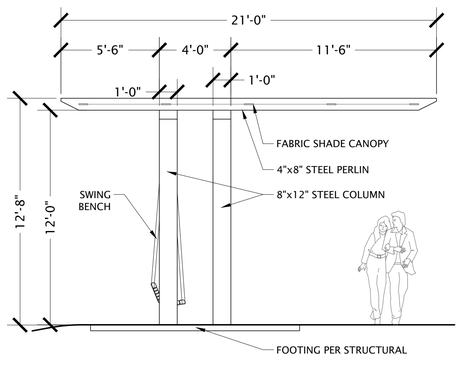

SIDE ELEVATION VIEW

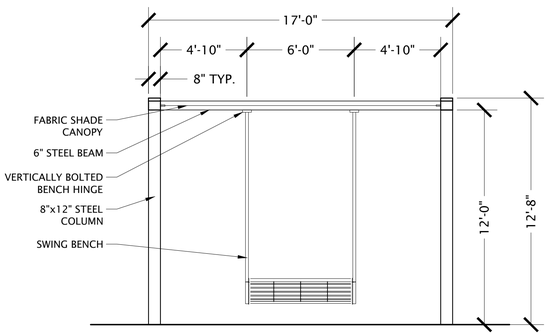

FRONT ELEVATION VIEW

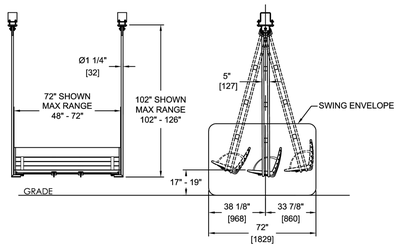

SWING BENCH ELEVATIONS

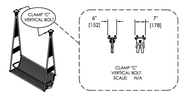

BENCH ARMS AND HINGE

NOTES:
1. ALL MEMBERS AND ELEMENTS SHALL BE POWDERCOATED STEEL, COLOR AS SELECTED BY OWNER.
2. STRUCTURAL DETAILS AND FOOTINGS SHALL BE PER MANUFACTURER'S INSTRUCTIONS.
3. CONTRACTOR SHALL SUBMIT SHOP DRAWINGS TO OWNER FOR REVIEW, APPROVAL, AND PERMITTING PRIOR TO FABRICATION AND INSTALLATION.
4. BENCH MODEL TO BE THE LANDSCAPE FORMS PARC VUE, 6' BACKED BENCH OR APPROVED EQUAL. COLOR TBD.
5. SHADE SAIL CANOPY COLOR TO BE SELECTED BY OWNER.

3 STEEL STRUCTURE WITH LARGE SWINGS

1/4" = 1'-0"

P-22-246-59

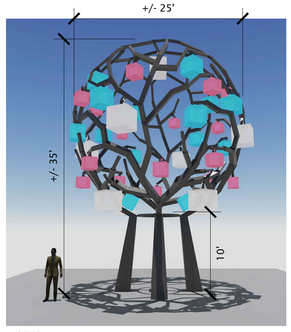



CUBE LIGHTS	
SIZE	QUANTITY
18" SQ.	16
24" SQ.	14
30" SQ.	9
TOTAL: 39 CUBES	

NOTES:
1. TREE MONUMENT, CUBE LIGHTS, ELECTRICAL PANELS AND WIRING TO BE PROVIDED AND INSTALLED BY DAN TOONE. CONTACT: PH: 801-971-2465. LIGHT CUBES TO BE SOURCED FROM CAMMAN LIGHTING. CONTACT: DEVIN SIKO: PH: 724.691.9766.
2. EXCLUDE TREE MONUMENT FROM BID.
3. TREE MONUMENT STRUCTURAL DRAWINGS FOR MONUMENT AND FOOTINGS TO BE PROVIDED BY DAN TOONE FOR CITY APPROVAL. CONTRACTOR SHALL INSTALL FOOTINGS AND ASSOCIATED ELECTRICAL/DATA SWEEPS.
4. SEE ELECTRICAL PLAN FOR LIGHTING CONNECTIONS.

4 TREE MONUMENT - N.I.C.

SCALE: NOT TO SCALE

P-22-246-100

CUSTOM TREE CLUSTER BUSINESS PARK — EST-11325

LIST OF MATERIALS / LISTE DE MATÉRIAUX	
BASE MATERIAL / MATÉRIEL	304 STAINLESS STEEL / ACIER INOXYDABLE
NOZZLES / BUSES	ACETAL / ACÉTAL URETHANE / URÉTHANE
PANELS / PANNEAUX	ACRYLIC / ACRYLIQUE

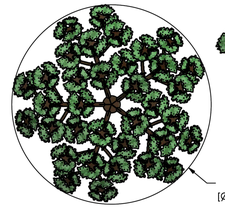



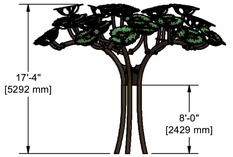



RECOMMENDED SPRAY AREA / ZONE D'ASPERSION POTENTIELLE			FLOW RATE / DÉBIT D'EAU		SOLD SEPARATELY / VENDUE SÉPARÉMENT				INITIAL:
R (ft/mm)	L (ft/mm)	W (ft/mm)	GPM/LPM	PSI/kPa	PLAYPHASE JIG / GABARIT	PLAYPHASE JIG QTY / GABARIT QTÉ	PLAYPHASE SML QTY / QTÉ	PLAYPHASE MED QTY / QTÉ	PLAYPHASE LRG QTY / QTÉ	
-/-	-/-	-/-	200/765	-/-	EST-11325-03	-	5			DRAWING ID: EST-11325 SHEET: 1 OF: 1
NOZZLES / BUSES		35	MARK 1 13904.1 Bmass		DIMENSIONAL ACCURACY / PRÉCISION DIMENSIONNELLE +/- 1" [300mm]					

WATERPLAY BY MAKA

ALL PLANS AND DESIGNS AT ALL TIMES REMAIN THE PROPERTY OF THE WATERPLAY AND CANNOT BE USED OR REPRODUCED WITHOUT WRITTEN PERMISSION.

TOUS LES PLANS ET DESSINS QUI WATERPLAY ONT CONCUS, LEUR APPARTIENNENT ET NE PEUVENT ÊTRE UTILISÉS OU REPRODUITS SANS AVOIR UNE PERMISSION ÉCRITE DE LEUR PART

REFER TO THE COMPONENT WRITTEN SPECIFICATION DOCUMENT FOR COMPLETE PRODUCT SPECIFICATIONS. PRODUCT SPECIFICATIONS SUBJECT TO CHANGE THIS SPECIFICATION WITHOUT NOTICE

SE RÉFÉRER AU DOCUMENT DE SPÉCIFICATION ÉCRIT POUR LES DÉTAILS COMPLET DU PRODUIT. WATERPLAY A LE DROIT DE CHANGER CES DERNIERS SANS PRÉAVIS.

655 CROWLEY AVE.
KELOWNA, BRITISH COLUMBIA
CANADA, V1Y 7G6
P: 250-712-3392
T: 1-800-661-6254
E: productsupport@waterplay.com
W: waterplay.com

NOTES:
1. HEADWATER FEATURE TREE TO BE PROVIDED BY PLAY SPACE DESIGNS OR APPROVED EQUAL.
2. OWNER PROVIDED, TO BE INSTALLED BY CONTRACTOR.
3. CONTACT:
MORGAN SELPH
PLAYSPACE DESIGNS
PH: 801.386.6244

5 HEADWATER FEATURE TREE

SCALE: NOT TO SCALE

blu line designs
planning | landscape architecture | desi
8719 S. Sandy Parkway
Sandy, UT 84070
p 801.913.7994

CLIENT
FARMINGTON CITY
CONTACT: SYLVIA CLARK
PH: 801.939.9295
EMAIL:
SCLARK@FARMINGTON.UTAH.GO

IVY ACRES PARK

1397 WEST COOK LANE
FARMINGTON, UT

REVISIONS

NO.	symmbbe	DESCRIPTION

Stamp

STATE OF UTAH
CORY A SHUPE
Licensed Landscape Architect
03/06/2024

Designed By:	BP
Drawn By:	BP, TH
Date:	03/06/2024
Checked By:	CS
Project No:	22-246

Drawing Title

SITE PLAN DETAILS

Drawing number

LS506

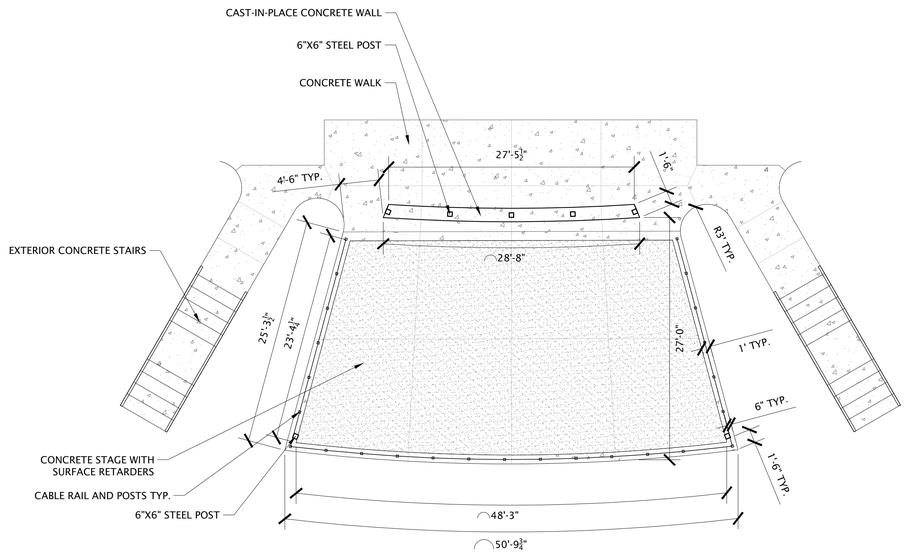

STAGE PLAN VIEW

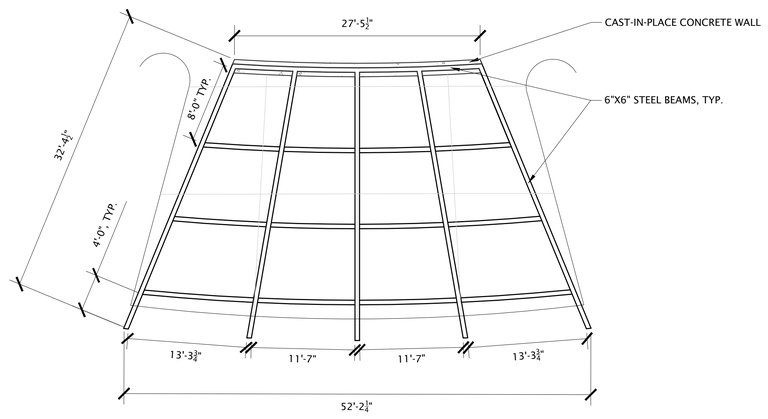

METAL STRUCTURE PLAN VIEW

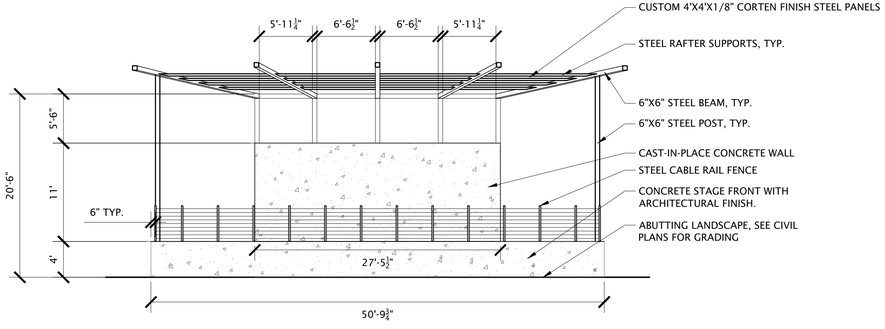

FRONT ELEVATION VIEW

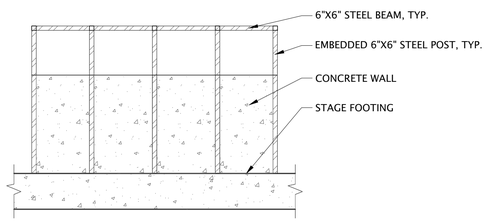

WALL SECTION VIEW

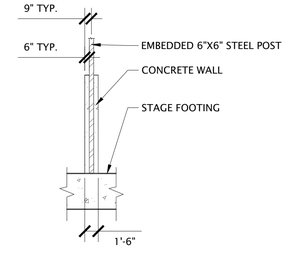

WALL SECTION VIEW

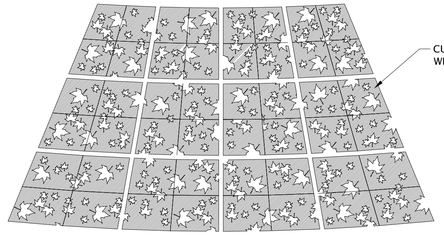

CUSTOM PANELS

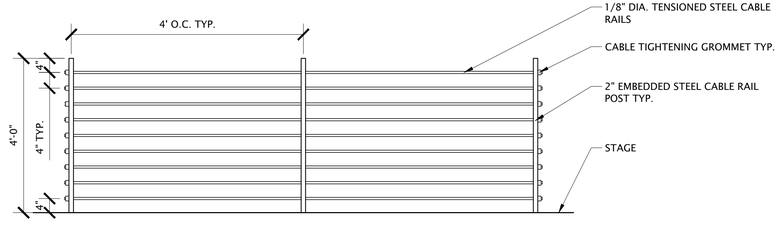

CABLE RAILING ELEVATION

NOTES:
1. ICON MODEL #81580.
2. ALL CONCRETE WORK TO HAVE A PLANK ARCHITECTURAL FINISH, EXCEPT AS OTHERWISE NOTED.
3. STAGE TOP SHALL BE FINISHED WITH TOP-CAST MICRO-ETCH NO. 03 CODE ACID ETCH FINISH. CITY TO APPROVE COLORS PRIOR TO INSTALLATION.
4. STEEL CUTOUT PATTERN TO BE PROVIDED BY LANDSCAPE ARCHITECT. VERIFY AND COORDINATE PRIOR TO FABRICATION.
5. STEEL MEMBER'S COLOR TO BE SELECTED BY OWNER.
6. STRUCTURAL AND SHOP DRAWINGS PROVIDED BY OTHERS.
7. RAIL MEMBERS TO COMPLY WITH FARMINGTON CITY CODE.

1 STEEL STRUCTURE WITH STAGE

SCALE: NOT TO SCALE

blu line designs
planning | landscape architecture | desi

8719 S. Sandy Parkway
Sandy, UT 84070
p 801.913.7994

CLIENT

FARMINGTON CITY
CONTACT: SYLVIA CLARK
PH: 801.939.9295
EMAIL:
SCLARK@FARMINGTON.UTAH.GO

IVY ACRES PARK

1397 WEST COOK LANE
FARMINGTON, UT

REVISIONS

NO.	symmbbl	DESCRIPTION

Stamp

STATE OF UTAH
CORY A SHUPE
Licensed Landscape Architect

03/06/2024

Designed By:	BP
Drawn By:	BP, TH
Date:	03/06/2024
Checked By:	CS
Project No:	22-246

Drawing Title

SITE PLAN DETAILS

Drawing number

LS507

GENERAL NOTES

1. ALL CONSTRUCTION MUST STRICTLY FOLLOW THE STANDARDS AND SPECIFICATIONS SET FORTH BY: THE DESIGN ENGINEER, LOCAL AGENCY JURISDICTION, APWA (CURRENT EDITION), AND THE MANUAL ON UNIFORM TRAFFIC CONTROL DEVICES (M.U.T.C.D.). THE ORDER LISTED ABOVE IS ARRANGED BY SENIORITY. THE LATEST EDITION OF ALL STANDARDS AND SPECIFICATIONS MUST BE ADHERED TO. IF A CONSTRUCTION PRACTICE IS NOT SPECIFIED BY ANY OF THE LISTED SOURCES, CONTRACTOR MUST CONTACT DESIGN ENGINEER FOR DIRECTION.
2. CONTRACTOR TO STRICTLY FOLLOW THE MOST CURRENT COPY OF THE SOILS REPORT FOR THIS PROJECT. ALL GRADING INCLUDING BUT NOT LIMITED TO CUT, FILL, COMPACTION, ASPHALT SECTION, SUBBASE, TRENCH EXCAVATION/BACKFILL, SITE GRUBBING, AND FOOTINGS MUST BE COORDINATED DIRECTLY WITH SOILS REPORT.
3. CONTRACTOR MUST VERIFY ALL EXISTING CONDITIONS BEFORE BIDDING, AND BRING UP ANY QUESTIONS BEFORE SUBMITTING BID.
4. CONTRACTOR SHALL PROVIDE A CONSTRUCTION SCHEDULE IN ACCORDANCE WITH THE CITY, STATE, OR COUNTY REGULATIONS FOR WORKING IN THE PUBLIC WAY.
5. CONTRACTOR SHALL BE RESPONSIBLE FOR DUST CONTROL ACCORDING TO GOVERNING AGENCY STANDARDS. WET DOWN DRY MATERIALS AND RUBBISH TO PREVENT BLOWING.
6. CONTRACTOR SHALL BE RESPONSIBLE FOR ANY DAMAGE TO ADJACENT SURFACE IMPROVEMENTS.
7. CONTRACTOR SHALL BE RESPONSIBLE FOR CORRECTING ANY SETTLEMENT OF OR DAMAGE TO EXISTING UTILITIES.
8. THE CONTRACTOR IS RESPONSIBLE TO FURNISH ALL MATERIALS TO COMPLETE THE PROJECT.
9. ALL EXPOSED SURFACES WILL HAVE A TEXTURED FINISH, RUBBED, OR BROOMED. ANY "PLASTERING" OF NEW CONCRETE WILL BE DONE WHILE IT IS STILL "GREEN".
10. PRIOR TO STARTING CONSTRUCTION, THE CONTRACTOR SHALL BE RESPONSIBLE FOR VERIFYING THAT ALL REQUIRED PERMITS AND APPROVALS HAVE BEEN OBTAINED. NO CONSTRUCTION OR FABRICATION SHALL BEGIN UNTIL THE CONTRACTOR HAS RECEIVED AND THOROUGHLY REVIEWED ALL PLANS AND OTHER DOCUMENTS APPROVED BY ALL OF THE PERMITTING AUTHORITIES.
11. THE LOCATIONS OF UNDERGROUND FACILITIES SHOWN ON THESE PLANS ARE BASED ON FIELD SURVEYS AND LOCAL UTILITY COMPANY RECORDS. IT SHALL BE THE CONTRACTOR'S FULL RESPONSIBILITY TO CONTACT THE VARIOUS UTILITY COMPANIES TO LOCATE THEIR FACILITIES PRIOR TO PROCEEDING WITH CONSTRUCTION. NO ADDITIONAL COMPENSATION SHALL BE PAID TO THE CONTRACTOR FOR DAMAGE AND REPAIR TO THESE FACILITIES CAUSED BY HIS WORK FORCE. CONTRACTOR SHALL START INSTALLATION AT LOW POINT OF ALL NEW GRAVITY UTILITY LINES.
12. ALL DIMENSIONS, GRADES, AND UTILITY DESIGN SHOWN ON THE PLANS SHALL BE VERIFIED BY THE CONTRACTOR PRIOR TO CONSTRUCTION. CONTRACTOR SHALL NOTIFY THE ENGINEER IF ANY DISCREPANCIES EXIST, PRIOR TO PROCEEDING WITH CONSTRUCTION FOR NECESSARY PLAN OR GRADE CHANGES. NO EXTRA COMPENSATION SHALL BE PAID TO THE CONTRACTOR FOR WORK HAVING TO BE REDONE DUE TO THE DIMENSIONS OR GRADES SHOWN INCORRECTLY ON THESE PLANS, IF SUCH NOTIFICATION HAS NOT BEEN GIVEN.
13. NO CHANGE IN DESIGN LOCATION OR GRADE WILL BE MADE BY THE CONTRACTOR WITHOUT THE WRITTEN APPROVAL OF THE PROJECT ENGINEER.
14. NATURAL VEGETATION AND SOIL COVER SHALL NOT BE DISTURBED PRIOR TO ACTUAL CONSTRUCTION OF A REQUIRED FACILITY OR IMPROVEMENT. MASS CLEARING OF THE SITE IN ANTICIPATION OF CONSTRUCTION SHALL BE AVOIDED.
15. CONTRACTOR SHALL BE RESPONSIBLE FOR FURNISHING, MAINTAINING, OR RESTORING ALL MONUMENTS AND MONUMENT REFERENCE MARKS WITHIN THE PROJECT SITE. CONTACT THE CITY OR COUNTY SURVEYOR FOR MONUMENT LOCATIONS AND CONSTRUCTION DETAILS.
16. EXISTING UTILITY INFORMATION SHOWN IS FOR INFORMATIONAL PURPOSES ONLY. IT IS DERIVED FROM ON-SITE SURVEY AND/OR UTILITY MAPPING PROVIDED TO THE ENGINEER, AND THEREFORE UTILITIES MAY NOT BE LOCATED CORRECTLY, EITHER HORIZONTALLY OR VERTICALLY, AND MAY NOT BE ALL INCLUSIVE. CONTRACTOR IS REQUIRED TO FOLLOW THE PROCEDURE OUTLINED BELOW:
    - 16.1. CONTRACTOR IS REQUIRED TO LOCATE AND POTHOLE ALL EXISTING UTILITY LINES (BOTH HORIZONTALLY AND VERTICALLY) THAT AFFECT THE PROJECT CONSTRUCTION, EITHER ON-SITE OR OFF-SITE, AND DETERMINE IF THERE ARE ANY CONFLICTS WITH THE DESIGN OF THE SITE AS SHOWN ON THE APPROVED PLANS PRIOR TO ANY CONSTRUCTION. IF IT IS DETERMINED THAT CONFLICTS EXIST BETWEEN EXISTING UTILITIES AND DESIGN UTILITIES (OR ANOTHER ASPECT OF PROPOSED CONSTRUCTION) THE ENGINEER MUST BE NOTIFIED IMMEDIATELY TO CORRECT THE CONFLICTS BEFORE ANY WORK CAN BEGIN. IF THE CONTRACTOR FAILS TO FOLLOW THIS ABSOLUTE REQUIREMENT AND CONFLICTS ARISE DURING CONSTRUCTION THE CONTRACTOR WILL BEAR THE SOLE RESPONSIBILITY TO FIX THE CONFLICTS.
    - 16.2. CONTRACTOR IS REQUIRED TO VERIFY THAT PROPER COVER AND PROTECTION OF EXISTING UTILITY LINES IS MAINTAINED OR ATTAINED WITHIN THE DESIGN ONCE VERIFICATION OF THE EXISTING UTILITIES IS COMPLETED AS OUTLINED IN 16.1 ABOVE.
    - 16.3. IN ADDITION TO 16.1 AND 16.2 ABOVE THE CONTRACTOR WILL VERIFY DEPTHS OF UTILITIES IN THE FIELD BY "POTHOLING" A MINIMUM OF 300 FEET AHEAD OF PROPOSED PIPELINE CONSTRUCTION TO AVOID POTENTIAL CONFLICTS WITH DESIGNED PIPELINE ALIGNMENT AND GRADE AND EXISTING UTILITIES.
    - 16.4. IF A CONFLICT ARISES BETWEEN EXISTING UTILITIES AND DESIGN UTILITIES (OR ANOTHER ASPECT OF PROPOSED CONSTRUCTION) AS DETERMINED UNDER 16.1, 16.2 OR 16.3 THE CONTRACTOR WILL NOTIFY THE ENGINEER IMMEDIATELY TO RESOLVE THE CONFLICT.
    - 16.5. IF A CONFLICT ARISES BETWEEN EXISTING UTILITIES AND DESIGN UTILITIES (OR ANOTHER ASPECT OF PROPOSED CONSTRUCTION) RESULTING FROM THE CONTRACTOR'S NEGLIGENCE TO IDENTIFY AND/OR "POTHOLE" EXISTING UTILITIES AS REQUIRED IN 16.1, 16.2 AND 16.3 ABOVE, THE CONTRACTOR WILL BE REQUIRED TO RESOLVE THE CONFLICT WITHOUT ADDITIONAL COST OR CLAIM TO THE OWNER OR ENGINEER.
17. ANY AREA OUTSIDE THE LIMIT OF WORK THAT IS DISTURBED SHALL BE RESTORED TO ITS ORIGINAL CONDITION AT NO COST TO OWNER.
18. CONSULT ALL OF THE DRAWINGS AND SPECIFICATIONS FOR COORDINATION REQUIREMENTS BEFORE COMMENCING CONSTRUCTION.
19. AT ALL LOCATIONS WHERE EXISTING PAVEMENT ABUTS NEW CONSTRUCTION, THE EDGE OF THE EXISTING PAVEMENT SHALL BE SAWCUT TO A CLEAN, SMOOTH EDGE.
20. ALL CONSTRUCTION AND MATERIALS SHALL BE IN ACCORDANCE WITH THE MOST RECENT, ADOPTED EDITION OF ADA ACCESSIBILITY GUIDELINES.
21. CONTRACTOR SHALL, AT THE TIME OF BIDDING AND THROUGHOUT THE PERIOD OF THE CONTRACT, BE LICENSED IN THE STATE OF UTAH AND SHALL BE BONDABLE FOR AN AMOUNT REQUIRED BY THE OWNER.
22. CONTRACTOR SHALL BE RESPONSIBLE TO PROVIDE ALL WATER, POWER, SANITARY FACILITIES AND TELEPHONE SERVICES AS REQUIRED FOR THE CONTRACTOR'S USE DURING CONSTRUCTION.
23. CONTRACTOR SHALL BE RESPONSIBLE FOR ADEQUATELY SCHEDULING INSPECTION AND TESTING OF ALL FACILITIES CONSTRUCTED UNDER THIS CONTRACT. ALL TESTING SHALL CONFORM TO THE REGULATORY AGENCY'S STANDARD SPECIFICATIONS. ALL RE-TESTING AND/OR RE-INSPECTION SHALL BE PAID FOR BY THE CONTRACTOR.
24. IF EXISTING IMPROVEMENTS NEED TO BE DISTURBED AND/OR REMOVED FOR THE PROPER PLACEMENT OF IMPROVEMENTS TO BE CONSTRUCTED BY THESE PLANS, THE CONTRACTOR SHALL BE RESPONSIBLE FOR PROTECTING EXISTING IMPROVEMENTS FROM DAMAGE. COST OF REPLACING OR REPAIRING EXISTING IMPROVEMENTS SHALL BE INCLUDED IN THE UNIT PRICE BID FOR ITEMS REQUIRING REMOVAL AND/OR REPLACEMENT. THERE WILL BE NO EXTRA COST DUE TO THE CONTRACTOR FOR REPLACING OR REPAIRING EXISTING IMPROVEMENTS.
25. WHENEVER EXISTING FACILITIES ARE REMOVED, DAMAGED, BROKEN, OR CUT IN THE INSTALLATION OF THE WORK COVERED BY THESE PLANS OR SPECIFICATIONS, SAID FACILITIES SHALL BE REPLACED AT THE CONTRACTOR'S EXPENSE WITH MATERIALS EQUAL TO OR BETTER THAN THE MATERIALS USED IN THE ORIGINAL EXISTING FACILITIES. THE FINISHED PRODUCT SHALL BE SUBJECT TO THE APPROVAL OF THE OWNER, THE ENGINEER, AND THE RESPECTIVE REGULATORY AGENCY.
26. CONTRACTOR SHALL MAINTAIN A NEATLY MARKED SET OF FULL-SIZE RECORD DRAWINGS SHOWING THE FINAL LOCATION AND LAYOUT OF ALL STRUCTURES AND OTHER FACILITIES. RECORD DRAWINGS SHALL REFLECT CHANGE ORDERS, ACCOMMODATIONS, AND ADJUSTMENTS TO ALL IMPROVEMENTS CONSTRUCTED. WHERE NECESSARY, SUPPLEMENTAL DRAWINGS SHALL BE PREPARED AND SUBMITTED BY THE CONTRACTOR. PRIOR TO ACCEPTANCE OF THE PROJECT, THE CONTRACTOR SHALL DELIVER TO THE ENGINEER ONE SET OF NEATLY MARKED RECORD DRAWINGS SHOWING THE INFORMATION REQUIRED ABOVE. RECORD DRAWINGS SHALL BE REVIEWED AND THE COMPLETE RECORD DRAWING SET SHALL BE CURRENT WITH ALL CHANGES AND DEVIATIONS REDLINED AS A PRECONDITION TO THE FINAL PROGRESS PAYMENT APPROVAL AND/OR FINAL ACCEPTANCE.
27. WHERE THE PLANS OR SPECIFICATIONS DESCRIBE PORTIONS OF THE WORK IN GENERAL TERMS BUT NOT IN COMPLETE DETAIL, IT IS UNDERSTOOD THAT ONLY THE BEST GENERAL PRACTICE IS TO PREVAIL AND THAT ONLY MATERIALS AND WORKMANSHIP OF THE FIRST QUALITY ARE TO BE USED.
28. ALL EXISTING GATES AND FENCES TO REMAIN UNLESS OTHERWISE NOTED ON PLANS. PROTECT ALL GATES AND FENCES FROM DAMAGE.
29. ALL EXISTING TREES ARE TO REMAIN UNLESS OTHERWISE NOTED ON PLANS. PROTECT ALL TREES FROM DAMAGE.
30. ASPHALT MIX DESIGN MUST BE SUBMITTED AND APPROVED BY THE GOVERNING AGENCY PRIOR TO THE PLACEMENT.
31. CONTRACTORS ARE RESPONSIBLE FOR ALL OSHA REQUIREMENTS ON THE PROJECT SITE.
32. A UPDES (UTAH POLLUTANT DISCHARGE ELIMINATION SYSTEM) PERMIT IS REQUIRED FOR ALL CONSTRUCTION ACTIVITIES 1 ACRE OR MORE AS WELL AS A STORM WATER POLLUTION PREVENTION PLAN.

EROSION CONTROL NOTES

1. ALL STORM WATER AND DIRT WILL BE KEPT ON SITE DURING CONSTRUCTION UNTIL FINAL LANDSCAPING IS DONE. THE CONTRACTOR WILL BE HELD RESPONSIBLE FOR KEEPING MUD/DIRT ON SITE DURING BAD WEATHER AND FOR CLEANING UP AFTER SUBCONTRACTORS.
2. GRAVEL BAGS (OR EQUIVALENT BMP) TO BE PLACED AND MAINTAINED AROUND ANY STORM DRAIN INLET ADJACENT TO OR IMMEDIATELY DOWNSTREAM FROM SITE DURING CONSTRUCTION.
3. A LINED CONCRETE WASHOUT AREA MUST BE PROVIDED AT THE SITE FOR ALL CONCRETE, PAINT, STUCCO OR MASONRY WORK. WASHOUT ON THE GROUND IS PROHIBITED.

UTILITY NOTES

1. ALL CONSTRUCTION AND MATERIALS SHALL BE IN ACCORDANCE WITH THESE CONTRACT DOCUMENTS, CITY AND STATE REQUIREMENTS AND THE MOST RECENT EDITIONS OF THE FOLLOWING: THE INTERNATIONAL PLUMBING CODE, UTAH DRINKING WATER REGULATIONS, APWA MANUAL OF STANDARD PLANS AND SPECIFICATIONS. THE CONTRACTOR IS REQUIRED TO ADHERE TO ALL OF THE ABOVE-MENTIONED DOCUMENTS UNLESS OTHERWISE NOTED AND APPROVED BY THE ENGINEER.
2. CONTRACTOR SHALL COORDINATE LOCATION OF NEW "DRY UTILITIES" WITH THE APPROPRIATE UTILITY COMPANY, INCLUDING BUT NOT LIMITED TO: TELEPHONE & INTERNET SERVICE, GAS SERVICE, CABLE, AND POWER.
3. EXISTING UTILITIES HAVE BEEN SHOWN ON THE PLANS BASED ON ON-SITE SURVEY. PRIOR TO COMMENCING ANY WORK, IT SHALL BE THE CONTRACTOR'S RESPONSIBILITY TO HAVE EACH UTILITY COMPANY LOCATE, IN THE FIELD, THEIR MAIN AND SERVICE LINES. THE CONTRACTOR SHALL NOTIFY BLUE STAKES AT 1-800-662-4111 48 HOURS IN ADVANCE OF PERFORMING ANY EXCAVATION WORK. THE CONTRACTOR SHALL RECORD THE BLUE STAKES ORDER NUMBER AND FURNISH ORDER NUMBER TO OWNER AND ENGINEER PRIOR TO ANY EXCAVATION. IT WILL BE THE CONTRACTOR'S SOLE RESPONSIBILITY TO DIRECTLY CONTACT ANY OTHER UTILITY COMPANIES THAT ARE NOT MEMBERS OF BLUE STAKES. IT SHALL BE THE CONTRACTOR'S SOLE RESPONSIBILITY TO PROTECT ALL EXISTING UTILITIES SO THAT NO DAMAGE RESULTS TO THEM DURING THE PERFORMANCE OF THIS CONTRACT. ANY REPAIRS NECESSARY TO DAMAGED UTILITIES SHALL BE PAID FOR BY THE CONTRACTOR. THE CONTRACTOR SHALL BE REQUIRED TO COOPERATE WITH OTHER CONTRACTORS AND UTILITY COMPANIES INSTALLING NEW STRUCTURES, UTILITIES AND SERVICE TO THE PROJECT.
4. CARE SHOULD BE TAKEN IN ALL EXCAVATIONS DUE TO POSSIBLE EXISTENCE OF UNRECORDED UTILITY LINES. EXCAVATION REQUIRED WITHIN PROXIMITY OF EXISTING UTILITY LINES SHALL BE DONE BY HAND. CONTRACTOR SHALL REPAIR ANY DAMAGE TO EXISTING UTILITY LINES OR STRUCTURES INCURRED DURING CONSTRUCTION OPERATIONS AT CONTRACTOR'S EXPENSE.
5. TRENCH BACKFILL MATERIAL AND COMPACTION TESTS ARE TO BE TAKEN PER APWA STANDARD SPECIFICATIONS (CURRENT EDITION), SECTION 33 05 20 - BACKFILLING TRENCHES, OR AS REQUIRED BY THE GEOTECHNICAL REPORT IF NATIVE MATERIALS ARE USED. NO NATIVE MATERIALS ARE ALLOWED IN THE PIPE ZONE. THE MAXIMUM LIFT FOR BACKFILLING EXCAVATIONS IS DETERMINED BY THE GEOTECHNICAL RECOMMENDATIONS.
6. THE CONTRACTOR IS SOLELY RESPONSIBLE FOR CONFORMING TO LOCAL AND FEDERAL CODES GOVERNING SHORING AND BRACING OF EXCAVATIONS AND TRENCHES AND FOR THE PROTECTION OF WORKERS.
7. THE CONTRACTOR IS REQUIRED TO KEEP ALL CONSTRUCTION ACTIVITIES WITHIN THE APPROVED PROJECT LIMITS. THIS INCLUDES, BUT IS NOT LIMITED TO VEHICLE AND EQUIPMENT STAGING, MATERIAL STORAGE AND LIMITS OF TRENCH EXCAVATION. IT IS THE CONTRACTOR'S RESPONSIBILITY TO OBTAIN PERMISSION AND/OR EASEMENTS FROM THE APPROPRIATE GOVERNING ENTITY AND/OR INDIVIDUAL PROPERTY OWNER(S) FOR WORK OR STAGING OUTSIDE OF THE PROJECT LIMITS.
8. THE CONTRACTOR IS RESPONSIBLE FOR REPAIRING ANY DAMAGE, CAUSED BY ANY CONDITION INCLUDING SETTLEMENT, TO EXISTING UTILITIES FROM WORK PERFORMED AT OR NEAR EXISTING UTILITIES. THE CONTRACTOR SHALL TAKE ALL MEASURES NECESSARY TO PROTECT ALL EXISTING PUBLIC AND PRIVATE ROADWAY AND UTILITY FACILITIES. DAMAGE TO EXISTING FACILITIES CAUSED BY THE CONTRACTOR MUST BE REPAIRED BY THE CONTRACTOR AT HIS/HER EXPENSE TO THE SATISFACTION OF THE OWNER OF SAID FACILITIES.
9. ALL WATER LINE AND SEWER LINE INSTALLATION AND TESTING TO BE IN ACCORDANCE WITH LOCAL GOVERNING AGENCY'S STANDARDS AND SPECIFICATIONS.
10. ALL MANHOLES, HYDRANTS, VALVES, CLEANOUT BOXES, CATCH BASINS, METERS, ETC. MUST BE RAISED OR LOWERED TO FINAL GRADE PER APWA (CURRENT EDITION) STANDARDS AND INSPECTOR REQUIREMENTS. CONCRETE COLLARS MUST BE CONSTRUCTED ON ALL MANHOLES, CLEANOUT BOXES, CATCH BASINS, AND VALVES PER APWA STANDARDS. ALL MANHOLE, CATCH BASIN, OR CLEANOUT BOX CONNECTIONS MUST BE MADE WITH THE PIPE CUT FLUSH WITH THE INSIDE OF THE BOX AND GROUTED OR SEALED.
11. CONTRACTOR SHALL NOT ALLOW ANY GROUNDWATER OR DEBRIS TO ENTER THE NEW OR EXISTING PIPE DURING CONSTRUCTION.
12. SILT AND DEBRIS ARE TO BE CLEANED OUT OF ALL STORM DRAIN BOXES. CATCH BASINS ARE TO BE MAINTAINED IN A CLEANED CONDITION AS NEEDED UNTIL AFTER THE FINAL BOND RELEASE INSPECTION.
13. CONTRACTOR SHALL CLEAN ASPHALT, TAR OR OTHER ADHESIVES OFF OF ALL MANHOLE LIDS AND INLET GRATES TO ALLOW ACCESS.
14. EACH TRENCH SHALL BE EXCAVATED SO THAT THE PIPE CAN BE LAID TO THE ALIGNMENT AND GRADE AS REQUIRED. THE TRENCH WALL SHALL BE SO BRACED THAT THE WORKMEN MAY WORK SAFELY AND EFFICIENTLY. ALL TRENCHES SHALL BE DRAINED SO THE PIPE LAYING MAY TAKE PLACE IN DEWATERED CONDITIONS.
15. CONTRACTOR SHALL PROVIDE AND MAINTAIN AT ALL TIMES AMPLE MEANS AND DEVICES WITH WHICH TO REMOVE PROMPTLY AND TO PROPERLY DISPOSE OF ALL WATER ENTERING THE TRENCH EXCAVATION.
16. ALL SEWER LINES AND SEWER SERVICES SHALL HAVE A MINIMUM SEPARATION OF 10 FEET, EDGE TO EDGE, FROM THE WATER LINES. IF A 10 FOOT SEPARATION CAN NOT BE MAINTAINED, CONSTRUCT PER GOVERNING AGENCY'S MINIMUM SEPARATION STANDARDS.
17. CONTRACTOR SHALL INSTALL THRUST BLOCKING AT ALL WATERLINE ANGLE POINTS AND TEES.
18. ALL UNDERGROUND UTILITIES SHALL BE IN PLACE PRIOR TO INSTALLATION OF CURB, GUTTER, SIDEWALK AND STREET PAVING.
19. CONTRACTOR SHALL INSTALL MAGNETIC LOCATING TAPE CONTINUOUSLY OVER ALL NONMETALLIC PIPE.

TRAFFIC CONTROL AND SAFETY NOTES

1. TRAFFIC CONTROL AND STRIPING TO CONFORM TO THE CURRENT MANUAL OF UNIFORM TRAFFIC CONTROL DEVICES (M.U.T.C.D.).
2. BARRICADING AND DETOURING SHALL BE IN CONFORMANCE WITH THE REQUIREMENTS OF THE CURRENT M.U.T.C.D.
3. NO STREET SHALL BE CLOSED TO TRAFFIC WITHOUT WRITTEN PERMISSION FROM THE APPROPRIATE AGENCY, EXCEPT WHEN DIRECTED BY LAW ENFORCEMENT OR FIRE OFFICIALS.
4. THE CONTRACTOR SHALL MAKE EVERY EFFORT TO PROVIDE FOR SMOOTH TRAFFIC FLOW AND SAFETY. ACCESS SHALL BE MAINTAINED FOR ALL PROPERTIES ADJACENT TO THE WORK.
5. DETOURING OPERATIONS FOR A PERIOD OF SIX CONSECUTIVE CALENDAR DAYS, OR MORE, REQUIRE THE INSTALLATION OF TEMPORARY STREET STRIPING AND REMOVAL OF INTERFERING STRIPING BY SANDBLASTING. THE DETOURING STRIPING PLAN OR CONSTRUCTION TRAFFIC CONTROL PLAN MUST BE SUBMITTED TO THE GOVERNING AGENCY FOR REVIEW AND APPROVAL.
6. ALL TRAFFIC CONTROL DEVICES SHALL BE RESTORED TO THEIR ORIGINAL CONDITION AT THE END OF THE WORK TO THE SATISFACTION OF THE GOVERNING AGENCY.
7. TRAFFIC CONTROL DEVICES (TCDs) SHALL REMAIN VISIBLE AND OPERATIONAL AT ALL TIMES.
8. ALL PERMANENT TRAFFIC CONTROL DEVICES CALLED FOR HEREON SHALL BE IN PLACE AND IN FINAL POSITION PRIOR TO ALLOWING ANY PUBLIC TRAFFIC ONTO THE PORTIONS OF THE ROAD(S) BEING IMPROVED HEREUNDER, REGARDLESS OF THE STATUS OF COMPLETION OF PAVING OR OTHER OFF-SITE IMPROVEMENTS CALLED FOR BY THESE PLANS.
9. THE CONTRACTOR SHALL PROVIDE BARRICADES, SIGNS, FLASHERS, OTHER EQUIPMENT AND FLAG PERSONS NECESSARY TO INSURE THE SAFETY OF WORKERS AND VISITORS.
10. THE CONTRACTOR SHALL BE RESPONSIBLE FOR NOTIFYING UTAH TRANSIT AUTHORITY (UTA) IF THE CONSTRUCTION INTERRUPTS OR RELOCATES A BUS STOP OR HAS AN ADVERSE EFFECT ON BUS SERVICE ON THAT STREET TO ARRANGE FOR TEMPORARY RELOCATION OF STOP.

DEMOLITION NOTES

1. EXISTING UTILITY INFORMATION SHOWN IS FOR INFORMATIONAL PURPOSES ONLY. IT IS DERIVED FROM ON-SITE SURVEY AND MAY NOT BE LOCATED CORRECTLY AND IS NOT ALL INCLUSIVE. CONTRACTOR SHALL FIELD LOCATE ALL UTILITIES WITHIN THE PROJECT LIMITS BEFORE BEGINNING DEMOLITION/CONSTRUCTION.
2. THERE MAY BE BURIED UTILITIES WITHIN THE LIMITS OF DISTURBANCE THAT ARE NOT SHOWN ON THE PLANS DUE TO LACK OF MAPPING OR RECORD INFORMATION. CONTRACTOR SHALL NOTIFY THE ENGINEER WHEN UNEXPECTED UTILITIES ARE DISCOVERED.
3. THE CONTRACTOR SHALL BE FULLY RESPONSIBLE FOR LOCATING AND PROTECTING FROM DAMAGE ALL EXISTING UTILITIES AND IMPROVEMENTS WHETHER OR NOT SHOWN ON THESE PLANS. THE FACILITIES AND IMPROVEMENTS ARE BELIEVED TO BE CORRECTLY SHOWN BUT THE CONTRACTOR IS REQUIRED TO SATISFY HIMSELF AS TO THE COMPLETENESS AND ACCURACY OF THE LOCATIONS. ANY CONTRACTOR PERFORMING WORK ON THIS PROJECT SHALL FAMILIARIZE HIMSELF WITH THE SITE AND SHALL BE HELD SOLELY RESPONSIBLE FOR ANY DAMAGE TO EXISTING FACILITIES RESULTING DIRECTLY, OR INDIRECTLY, FROM HIS OPERATIONS, WHETHER OR NOT SAID FACILITIES ARE SHOWN ON THESE PLANS.

GRADING AND DRAINAGE NOTES

1. SITE GRADING SHALL BE PERFORMED IN ACCORDANCE WITH THESE PLANS AND SPECIFICATIONS AND THE RECOMMENDATIONS SET FORTH IN THE GEOTECHNICAL REPORT AND ALL RELATED ADDENDUMS.
2. THE CONTRACTOR SHALL STRIP AND CLEAR THE TOPSOIL, MAJOR ROOTS AND ORGANIC MATERIAL FROM ALL PROPOSED BUILDING AND PAVEMENT AREAS PRIOR TO SITE GRADING. (THE TOPSOIL MAY BE STOCKPILED FOR LATER USE IN LANDSCAPED AREAS.)
3. THE CONTRACTOR SHALL REMOVE ALL ORGANIC MATERIAL AND OTHER DELETERIOUS MATERIALS PRIOR TO PLACING GRADING FILL OR BASE COURSE. THE AREA SHOULD BE PROOF-ROLLED TO IDENTIFY ANY SOFT AREAS. WHERE SOFT AREAS ARE ENCOUNTERED, THE CONTRACTOR SHALL REMOVE THE SOIL AND REPLACE WITH COMPACTED FILL.
4. ALL DEBRIS PILES AND BERMS SHOULD BE REMOVED AND HAULED AWAY FROM SITE OR USED AS GENERAL FILL IN LANDSCAPED AREAS.
5. THE CONTRACTOR SHALL CONSTRUCT THE BUILDING PAD TO THESE DESIGN PLANS AS PART OF THE SITE GRADING CONTRACT, AND STRICTLY ADHERE TO THE SITE PREPARATION AND GRADING REQUIREMENTS OUTLINED IN THE GEOTECHNICAL REPORT.
6. THE CONTRACTOR SHALL GRADE THE PROJECT SITE TO PROVIDE A SMOOTH TRANSITION BETWEEN NEW AND EXISTING ASPHALT, CURB AND GUTTER, AND ADJOINING SITE IMPROVEMENTS.
7. THE CONTRACTOR SHALL BE RESPONSIBLE FOR DAMAGE AND DEBRIS ON ADJACENT STREETS WHEN EQUIPMENT IS TRAVELING THOSE STREETS.
8. THE CONTRACTOR SHALL BE FAMILIAR WITH ALL CONDITIONS AND RECOMMENDATIONS OUTLINED IN THE GEOTECHNICAL REPORT AND TAKE ALL NECESSARY PRECAUTIONS AND RECOMMENDED PROCEDURES TO ASSURE SOUND GRADING PRACTICES.
9. THE CONTRACTOR SHALL TAKE APPROPRIATE GRADING MEASURES TO DIRECT STORM SURFACE RUNOFF TOWARDS CATCH BASINS.
10. THE LOCATIONS OF UNDERGROUND FACILITIES SHOWN ON THESE PLANS ARE BASED ON ON-SITE SURVEY. IT SHALL BE THE CONTRACTORS' FULL RESPONSIBILITY TO CONTACT THE VARIOUS UTILITY COMPANIES TO LOCATE THEIR FACILITIES PRIOR TO PROCEEDING WITH CONSTRUCTION. NO ADDITIONAL COMPENSATION SHALL BE PAID TO THE CONTRACTOR FOR DAMAGE AND REPAIR TO THESE FACILITIES CAUSED BY HIS WORK FORCE.
11. IT SHALL BE THE RESPONSIBILITY OF THE CONTRACTOR TO PERFORM ALL NECESSARY CUTS AND FILLS WITHIN THE LIMITS OF THIS PROJECT AND THE RELATED OFF-SITE WORK, SO AS TO GENERATE THE DESIRED SUBGRADE, FINISH GRADES, AND SLOPES SHOWN.
12. THE CONTRACTOR IS WARNED THAT AN EARTHWORK BALANCE WAS NOT NECESSARILY THE INTENT OF THIS PROJECT. ANY ADDITIONAL MATERIAL REQUIRED OR LEFTOVER MATERIAL FOLLOWING EARTHWORK OPERATIONS BECOMES THE RESPONSIBILITY OF THE CONTRACTOR.
13. THE GRADING CONTRACTOR IS RESPONSIBLE TO COORDINATE WITH THE OWNER TO PROVIDE FOR THE REQUIREMENTS OF THE PROJECT STORM WATER POLLUTION PREVENTION PLAN (SWPPP) AND ASSOCIATED PERMIT. ALL CONTRACTOR ACTIVITIES 1 ACRE OR MORE IN SIZE ARE REQUIRED TO PROVIDE A STORM WATER POLLUTION PREVENTION PLAN.
14. ALL CUT AND FILL SLOPES SHALL BE PROTECTED UNTIL EFFECTIVE EROSION CONTROL HAS BEEN ESTABLISHED.
15. THE USE OF POTABLE WATER WITHOUT A SPECIAL PERMIT FOR BUILDING OR CONSTRUCTION PURPOSES INCLUDING CONSOLIDATION OF BACKFILL OR DUST CONTROL IS PROHIBITED. THE CONTRACTOR SHALL OBTAIN ALL NECESSARY PERMITS FOR CONSTRUCTION WATER FROM GOVERNING AGENCY.
16. THE CONTRACTOR SHALL MAINTAIN THE STREETS, SIDEWALKS, AND ALL OTHER PUBLIC RIGHT-OF-WAYS IN A CLEAN, SAFE AND USABLE CONDITION. ALL SPILLS OF SOIL, ROCK OR CONSTRUCTION DEBRIS SHALL BE PROMPTLY REMOVED FROM THE PUBLICLY-OWNED PROPERTY DURING CONSTRUCTION AND UPON COMPLETION OF THE PROJECT. ALL ADJACENT PROPERTY, PRIVATE OR PUBLIC, SHALL BE MAINTAINED IN A CLEAN, SAFE, AND USABLE CONDITION.

ABBREVIATIONS

APWA	AMERICAN PUBLIC WORKS ASSOCIATION
AR	ACCESSIBLE ROUTE
ASTM	AMERICAN SOCIETY FOR TESTING AND MATERIALS
AWWA	AMERICAN WATER WORKS ASSOCIATION
BOS	BOTTOM OF STEP
BVC	BEGIN VERTICAL CURVE
C	CURVE
CB	CATCH BASIN
CF	CURB FACE OR CUBIC FEET
CL	CENTER LINE
CO	CLEAN OUT
COMM	COMMUNICATION
CONC	CONCRETE
CONT	CONTINUOUS
DIA	DIAMETER
DIP	DUCTILE IRON PIPE
ELEC	ELECTRICAL
ELEV	ELEVATION
EOA	EDGE OF ASPHALT
EVC	END OF VERTICAL CURVE
EW	EACH WAY
EXIST	EXISTING
FF	FINISH FLOOR
FG	FINISH GRADE
FH	FIRE HYDRANT
FL	FLOW LINE OR FLANGE
GB	GRADE BREAK
GF	GARAGE FLOOR
GV	GATE VALVE
HC	HANDICAP
HP	HIGH POINT
IRR	IRRIGATION
K	RATE OF VERTICAL CURVATURE
LD	LAND DRAIN
LF	LINEAR FEET
LP	LOW POINT
MEX	MATCH EXISTING
MH	MANHOLE
MJ	MECHANICAL JOINT
NG	NATURAL GROUND
NIC	NOT IN CONTRACT
NO	NUMBER
OC	ON CENTER
OCEW	ON CENTER EACH WAY
OHP	OVERHEAD POWER
PC	POINT OF CURVATURE OR PRESSURE CLASS
PCC	POINT OF COMPOUND CURVATURE
PI	POINT OF INTERSECTION
PIV	POST INDICATOR VALVE
PL	PROPERTY LINE
PRC	POINT OF REVERSE CURVATURE
PRO	PROPOSED
PT	POINT OF TANGENCY
PVC	POINT OF VERTICAL CURVATURE
PVI	POINT OF VERTICAL INTERSECTION
PVT	POINT OF VERTICAL TANGENCY
R	RADIUS
RD	ROOF DRAIN
ROW	RIGHT OF WAY
S	SLOPE
SAN SWR	SANITARY SEWER
SD	STORM DRAIN
SEC	SECONDARY
SS	SANITARY SEWER
STA	STATION
SW	SECONDARY WATER LINE
TBC	TOP BACK OF CURB
TOG	TOP OF GRATE
TOA	TOP OF ASPHALT
TOC	TOP OF CONCRETE
TOF	TOP OF FOUNDATION
TOW	TOP OF WALL
TOS	TOP OF STEP
TYP	TYPICAL
VC	VERTICAL CURVE
WIV	WALL INDICATOR VALVE
W	WATER LINE

NOTE: MAY CONTAIN ABBREVIATIONS THAT ARE NOT USED IN THIS PLAN SET.

LEGEND

SECTION CORNER	EXISTING EDGE OF ASPHALT
EXISTING MONUMENT	PROPOSED EDGE OF ASPHALT
PROPOSED MONUMENT	EXISTING STRIPING
EXISTING REBAR AND CAP	PROPOSED STRIPING
SET ENSIGN REBAR AND CAP	EXISTING FENCE
EXISTING WATER METER	PROPOSED FENCE
PROPOSED WATER METER	EXISTING FLOW LINE
EXISTING WATER MANHOLE	PROPOSED FLOW LINE
PROPOSED WATER M

CALL BLUESTAKES @ 811 AT LEAST 48 HOURS PRIOR TO THE COMMENCEMENT OF ANY CONSTRUCTION.

Know what's below. Call before you dig.

BENCHMARK

SOUTH QUARTER CORNER OF SECTION 14, TOWNSHIP 3 NORTH, RANGE 1 WEST SALT LAKE BASE AND MERIDIAN

ELEV = *4229.59'*

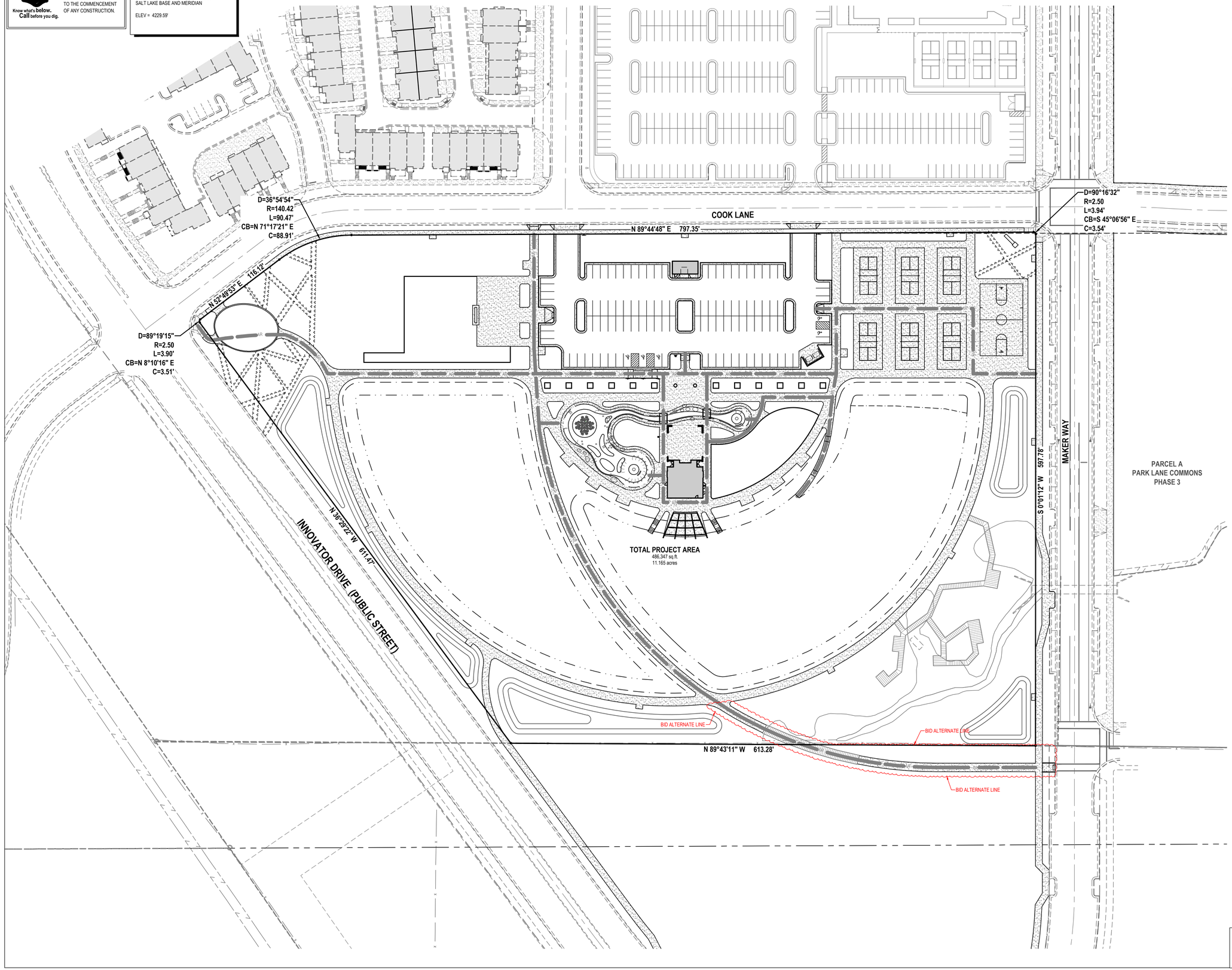

GENERAL NOTES

1. ALL WORK TO COMPLY WITH THE GOVERNING AGENCY'S STANDARDS AND SPECIFICATIONS.
2. ALL IMPROVEMENTS MUST COMPLY WITH ADA STANDARDS AND RECOMMENDATIONS.
3. SEE LANDSCAPE/ARCHITECTURAL PLANS FOR CONCRETE MATERIAL, COLOR, FINISH, AND SCORE PATTERNS THROUGHOUT SITE.
4. ALL PAVEMENT MARKINGS SHALL CONFORM TO THE LATEST EDITION OF THE M.U.T.C.D. (MANUAL ON UNIFORM TRAFFIC CONTROL DEVICES).
5. ALL SURFACE IMPROVEMENTS DISTURBED BY CONSTRUCTION SHALL BE RESTORED OR REPLACED, INCLUDING TREES AND DECORATIVE SHRUBS, SOD, FENCES, WALLS AND STRUCTURES, WHETHER OR NOT THEY ARE SPECIFICALLY SHOWN ON THE CONTRACT DOCUMENTS.
6. NOTIFY ENGINEER OF ANY DISCREPANCIES IN DESIGN OR STAKING BEFORE PLACING CONCRETE OR ASPHALT.
7. THE CONTRACTOR IS TO PROTECT AND PRESERVE ALL EXISTING IMPROVEMENTS, UTILITIES, AND SIGNS, ETC. UNLESS OTHERWISE NOTED ON THESE PLANS.
8. EXISTING UNDERGROUND UTILITIES AND IMPROVEMENTS ARE SHOWN IN THEIR APPROXIMATE LOCATIONS BASED UPON RECORD INFORMATION AVAILABLE AT THE TIME OF PREPARATION OF THESE PLANS. LOCATIONS MAY NOT HAVE BEEN VERIFIED IN THE FIELD AND NO GUARANTEE IS MADE AS TO THE ACCURACY OR COMPLETENESS OF THE INFORMATION SHOWN. IT SHALL BE THE RESPONSIBILITY OF THE CONTRACTOR TO DETERMINE THE EXISTENCE AND LOCATION OF THE UTILITIES SHOWN ON THESE PLANS OR INDICATED IN THE FIELD BY LOCATING SERVICES. ANY ADDITIONAL COSTS INCURRED AS A RESULT OF THE CONTRACTOR'S FAILURE TO VERIFY THE LOCATIONS OF EXISTING UTILITIES PRIOR TO THE BEGINNING OF CONSTRUCTION IN THEIR VICINITY SHALL BE BORNE BY THE CONTRACTOR AND ASSUMED INCLUDED IN THE CONTRACT. THE CONTRACTOR IS TO VERIFY ALL CONNECTION POINTS WITH THE EXISTING UTILITIES. THE CONTRACTOR IS RESPONSIBLE FOR ANY DAMAGE CAUSED TO THE EXISTING UTILITIES AND UTILITY STRUCTURES THAT ARE TO REMAIN. IF CONFLICTS WITH EXISTING UTILITIES OCCUR, THE CONTRACTOR SHALL NOTIFY THE ENGINEER PRIOR TO CONSTRUCTION TO DETERMINE IF ANY FIELD ADJUSTMENTS SHOULD BE MADE.
9. ALL SANITARY SEWER INFRASTRUCTURE TO BE INSTALLED PER GOVERNING AGENCY STANDARD PLANS AND SPECIFICATIONS.
10. ALL WATER INFRASTRUCTURE TO BE INSTALLED PER GOVERNING AGENCY OR APWA STANDARD PLANS AND SPECIFICATIONS.
11. DEFLECT OR LOOP ALL WATERLINES TO AVOID CONFLICTS WITH OTHER UTILITIES PER GOVERNING AGENCY'S STANDARDS AND SPECIFICATIONS.
12. PROJECT SHALL COMPLY WITH ALL UTAH DIVISION OF DRINKING WATER RULES AND REGULATIONS INCLUDING, BUT NOT LIMITED TO, THOSE PERTAINING TO BACKFLOW PROTECTION AND CROSS CONNECTION PREVENTION.
13. THE CONTRACTOR IS TO COORDINATE ALL UTILITIES WITH MECHANICAL/PLUMBING PLANS.
14. NOTIFY ENGINEER OF ANY DISCREPANCIES IN DESIGN OR STAKING BEFORE PLACING UTILITY STRUCTURES OR PIPES.
15. THE CONTRACTOR SHALL ADJUST TO GRADE ALL EXISTING UTILITIES AS NEEDED PER LOCAL GOVERNING AGENCY'S STANDARDS AND SPECIFICATIONS.
16. ALL UTILITIES LOCATED WITHIN ANY PRIVATE STREET SHALL BE PRIVATELY OWNED AND MAINTAINED.
17. FOR MONOLYTHIC POUR AREAS - SEE BLU-LINE PLANS.
18. FOR SAWCUT/CONTROL JOINT PLAN - SEE BLU-LINE PLANS.

HORIZONTAL GRAPHIC SCALE

50 0 25 50 100

(IN FEET)

HORZ: 1 inch = 50 ft.

FOR CONSTRUCTION

APPROVED FOR CONSTRUCTION

BY: _____ DATE: _____

CITY ENGINEER

blu line designs
planning | landscape architecture | design
8719 S. Sandy Parkway
Sandy, UT 84070
p 801.913.7994

ENSIGN
THE STANDARD IN ENGINEERING
LAYTON
919 North 400 West
Layton, UT 84041
Phone: 801.547.1100
WWW.ENSIGNENG.COM
ENSIGN PROJECT # 12281

IVY ACRES PARK

1397 WEST COOK LANE (500 NORTH)
FARMINGTON, UT

REVISIONS

NO.	APPROVAL	DESCRIPTION

PROFESSIONAL ENGINEER
No. 9149039
5-1-24
STATE OF UTAH
CAMERON NESS PRESTON

Designed By:	I.BUCKLEY
Drawn By:	M.ELMER
Date:	5/1/24
Checked By:	C.PRESTON
Project No:	22-246

Drawing Title

OVERALL SITE UTILITY PLAN

Drawing number

C100

811 Know what's below. Call before you dig.

CALL BLUESTAKES @ 811 AT LEAST 48 HOURS PRIOR TO THE COMMENCEMENT OF ANY CONSTRUCTION.

BENCHMARK

SOUTH QUARTER CORNER OF SECTION 14, TOWNSHIP 3 NORTH, RANGE 1 WEST SALT LAKE BASE AND MERIDIAN

ELEV = 4229.59'

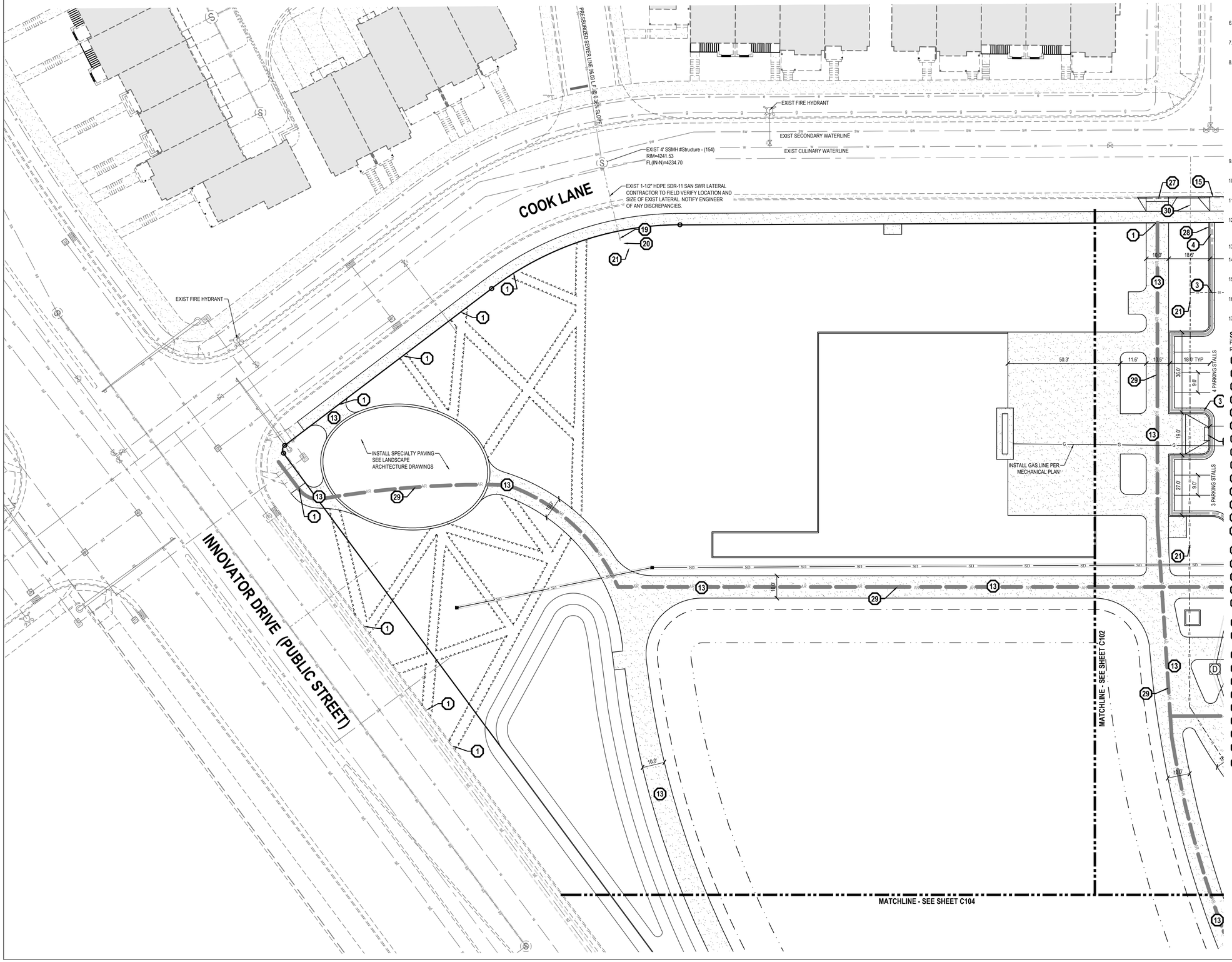

GENERAL NOTES

1. ALL WORK TO COMPLY WITH THE GOVERNING AGENCY'S STANDARDS AND SPECIFICATIONS.
2. ALL IMPROVEMENTS MUST COMPLY WITH ADA STANDARDS AND RECOMMENDATIONS.
3. SEE LANDSCAPE/ARCHITECTURAL PLANS FOR CONCRETE MATERIAL, COLOR, FINISH, DETAILS, SCORE PATTERNS THROUGHOUT SITE, AND MONOLITHIC POUR AT INTERSECTIONS.
4. ALL PAVEMENT MARKINGS SHALL CONFORM TO THE LATEST EDITION OF THE M.U.T.C.D. (MANUAL ON UNIFORM TRAFFIC CONTROL DEVICES).
5. ALL SURFACE IMPROVEMENTS DISTURBED BY CONSTRUCTION SHALL BE RESTORED OR REPLACED, INCLUDING TREES AND DECORATIVE SHRUBS, SOD, FENCES, WALLS AND STRUCTURES, WHETHER OR NOT THEY ARE SPECIFICALLY SHOWN ON THE CONTRACT DOCUMENTS.
6. NOTIFY ENGINEER OF ANY DISCREPANCIES IN DESIGN OR STAKING BEFORE PLACING CONCRETE OR ASPHALT.
7. THE CONTRACTOR IS TO PROTECT AND PRESERVE ALL EXISTING IMPROVEMENTS, UTILITIES, AND SIGNS, ETC. UNLESS OTHERWISE NOTED ON THESE PLANS.
8. EXISTING UNDERGROUND UTILITIES AND IMPROVEMENTS ARE SHOWN IN THEIR APPROXIMATE LOCATIONS BASED UPON RECORD INFORMATION AVAILABLE AT THE TIME OF PREPARATION OF THESE PLANS. LOCATIONS MAY NOT HAVE BEEN VERIFIED IN THE FIELD AND NO GUARANTEE IS MADE AS TO THE ACCURACY OR COMPLETENESS OF THE INFORMATION SHOWN. IT SHALL BE THE RESPONSIBILITY OF THE CONTRACTOR TO DETERMINE THE EXISTENCE AND LOCATION OF THE UTILITIES SHOWN ON THESE PLANS OR INDICATED IN THE FIELD BY LOCATING SERVICES. ANY ADDITIONAL COSTS INCURRED AS A RESULT OF THE CONTRACTOR'S FAILURE TO VERIFY THE LOCATIONS OF EXISTING UTILITIES PRIOR TO THE BEGINNING OF CONSTRUCTION IN THEIR VICINITY SHALL BE BORNE BY THE CONTRACTOR AND ASSUMED INCLUDED IN THE CONTRACT. THE CONTRACTOR IS TO VERIFY ALL CONNECTION POINTS WITH THE EXISTING UTILITIES. THE CONTRACTOR IS RESPONSIBLE FOR ANY DAMAGE CAUSED TO THE EXISTING UTILITIES AND UTILITY STRUCTURES THAT ARE TO REMAIN. IF CONFLICTS WITH EXISTING UTILITIES OCCUR, THE CONTRACTOR SHALL NOTIFY THE ENGINEER PRIOR TO CONSTRUCTION TO DETERMINE IF ANY FIELD ADJUSTMENTS SHOULD BE MADE.
9. ALL SANITARY SEWER INFRASTRUCTURE TO BE INSTALLED PER GOVERNING AGENCY STANDARD PLANS AND SPECIFICATIONS.
10. ALL WATER INFRASTRUCTURE TO BE INSTALLED PER GOVERNING AGENCY OR APWA STANDARD PLANS AND SPECIFICATIONS.
11. DEFLECT OR LOOP ALL WATERLINES TO AVOID CONFLICTS WITH OTHER UTILITIES PER GOVERNING AGENCY'S STANDARDS AND SPECIFICATIONS.
12. PROJECT SHALL COMPLY WITH ALL UTAH DIVISION OF DRINKING WATER RULES AND REGULATIONS INCLUDING, BUT NOT LIMITED TO, THOSE PERTAINING TO BACKFLOW PROTECTION AND CROSS CONNECTION PREVENTION.
13. THE CONTRACTOR IS TO COORDINATE ALL UTILITIES WITH MECHANICAL/PLUMBING PLANS.
14. NOTIFY ENGINEER OF ANY DISCREPANCIES IN DESIGN OR STAKING BEFORE PLACING UTILITY STRUCTURES OR PIPES.
15. THE CONTRACTOR SHALL ADJUST TO GRADE ALL EXISTING UTILITIES AS NEEDED PER LOCAL GOVERNING AGENCY'S STANDARDS AND SPECIFICATIONS.
16. ALL UTILITIES LOCATED WITHIN ANY PRIVATE STREET SHALL BE PRIVATELY OWNED AND MAINTAINED.
17. CONTRACTOR TO COORDINATE SITE LIGHTING WITH ELECTRICAL PLANS. NOTIFY ENGINEER OF ANY DISCREPANCIES.

SCOPE OF WORK:

PROVIDE, INSTALL AND/OR CONSTRUCT THE FOLLOWING PER THE SPECIFICATIONS GIVEN OR REFERENCED, THE DETAILS NOTED, AND/OR AS SHOWN ON THE CONSTRUCTION DRAWINGS:

1. MATCH EXISTING IMPROVEMENTS
2. INSTALL 30" CURB AND GUTTER PER DETAIL 1/C400
3. INSTALL 30" REVERSE PAN CURB AND GUTTER PER DETAIL 2/C400
4. TRANSITION FROM 30" REVERSE PAN TO 30" STANDARD CURB AND GUTTER
5. INSTALL PAVEMENT FOR TRASH ENCLOSURE PER DETAIL 4/C400
6. INSTALL TRASH ENCLOSURE PER ARCHITECTURAL PLANS
7. INSTALL HANDICAP ACCESSIBLE PARKING SIGN PER DETAIL 7/C400
8. INSTALL HANDICAP ACCESSIBLE PARKING PAVEMENT MARKING PER DETAIL 8/C400
9. INSTALL DRIVEWAY APPROACH PER FARMINGTON STANDARD DETAIL 221/C-401
10. INSTALL CLOW FIRE HYDRANT PER FARMINGTON STANDARD DETAIL 511 SP
11. NOT USED
12. INSTALL LIGHT DUTY PAVEMENT PER DETAIL 6/C400
13. INSTALL CONCRETE SIDEWALK PER DETAIL 3/C400. WIDTH PER PLAN
14. PICKLEBALL AND BASKETBALL COURTS TO BE POST TENSION CONCRETE. SEE STRUCTURAL DRAWINGS FOR DETAILS.
15. SAWCUT AND REMOVE BACK OF CURB FOR DRIVE APPROACH INSTALLATION
16. INSTALL 2" CULINARY WATER SERVICE LATERAL WITH 2" METER
17. FIELD LOCATE AND CONNECT TO EXIST CULINARY WATERLINE
18. INSTALL 6" C900 PVC CULINARY WATERLINE TO HYDRANT
19. FIELD LOCATE AND CONNECT TO EXIST SANITARY SEWER STUB CONTRACTOR TO FIELD VERIFY SIZE AND LOCATION OF STUB AND NOTIFY ENGINEER OF ANY DISCREPANCIES.
20. INSTALL 1-1/2" HDPE SDR-11 LATERAL TO MAIN SEE DETAIL 6/C-401.
21. INSTALL 1-1/4" HDPE SDR-11 PRESSURE SANITARY SEWER SERVICE LATERAL WITH CLEANOUT PER DETAIL 6/C-401.
22. FIELD LOCATE AND CONNECT TO EXIST SECONDARY WATER STUB
23. INSTALL PUBLIC "STOP" SIGN PER M.U.T.C.D. STANDARDS WITH STREET SIGNS
24. INSTALL HANDICAP ACCESSIBLE RAMP WITH DETECTABLE SURFACE PER DETAIL 1/C401
25. INSTALL HANDICAP ACCESSIBLE RAMP WITH DETECTABLE SURFACE PER DETAIL 2/C401
26. INSTALL HANDICAP ACCESSIBLE RAMP WITH DETECTABLE SURFACE PER DETAIL 3/C401
27. INSTALL HANDICAP ACCESSIBLE RAMP WITH DETECTABLE SURFACE PER DETAIL 4/C401
28. TAPER BACK OF CURB TO ZERO REVEAL AT SIDEWALK
29. ADA ACCESSIBLE ROUTE
30. FIELD LOCATE AND CONNECT TO EXISTING SANITARY SEWER LATERAL. EXACT LOCATION IS UNKNOWN.

NORTH

HORIZONTAL GRAPHIC SCALE

20 0 10 20 40

(IN FEET)

HORZ: 1 inch = 20 ft.

APPROVED FOR CONSTRUCTION

BY: _____ DATE: _____

CITY ENGINEER

FOR CONSTRUCTION

blu line designs
planning | landscape architecture | design
8719 S. Sandy Parkway
Sandy, UT 84070
p 801.913.7994

ENSIGN
THE STANDARD IN ENGINEERING
LAYTON
919 North 400 West
Layton, UT 84041
Phone: 801.547.1100
WWW.ENSIGNENG.COM
ENSIGN PROJECT # 12281

IVY ACRES PARK

1397 WEST COOK LANE (500 NORTH)
FARMINGTON, UT

REVISIONS

NO.	BY/PHASE	DESCRIPTION

PROFESSIONAL ENGINEER — REGISTERED — STATE OF UTAH — CAMERON NESS PRESTON — NO. 10349039 — 3-20-24

Designed By:	I.BUCKLEY
Drawn By:	M.ELMER
Date:	3/20/24
Checked By:	C.PRESTON
Project No:	22-246

Drawing Title

SITE UTILITY PLAN

Drawing number

C101

Know what's below. Call before you dig.

CALL BLUESTAKES @ 811 AT LEAST 48 HOURS PRIOR TO THE COMMENCEMENT OF ANY CONSTRUCTION.

BENCHMARK

SOUTH QUARTER CORNER OF SECTION 14, TOWNSHIP 3 NORTH, RANGE 1 WEST SALT LAKE BASE AND MERIDIAN

ELEV = 4229.59'

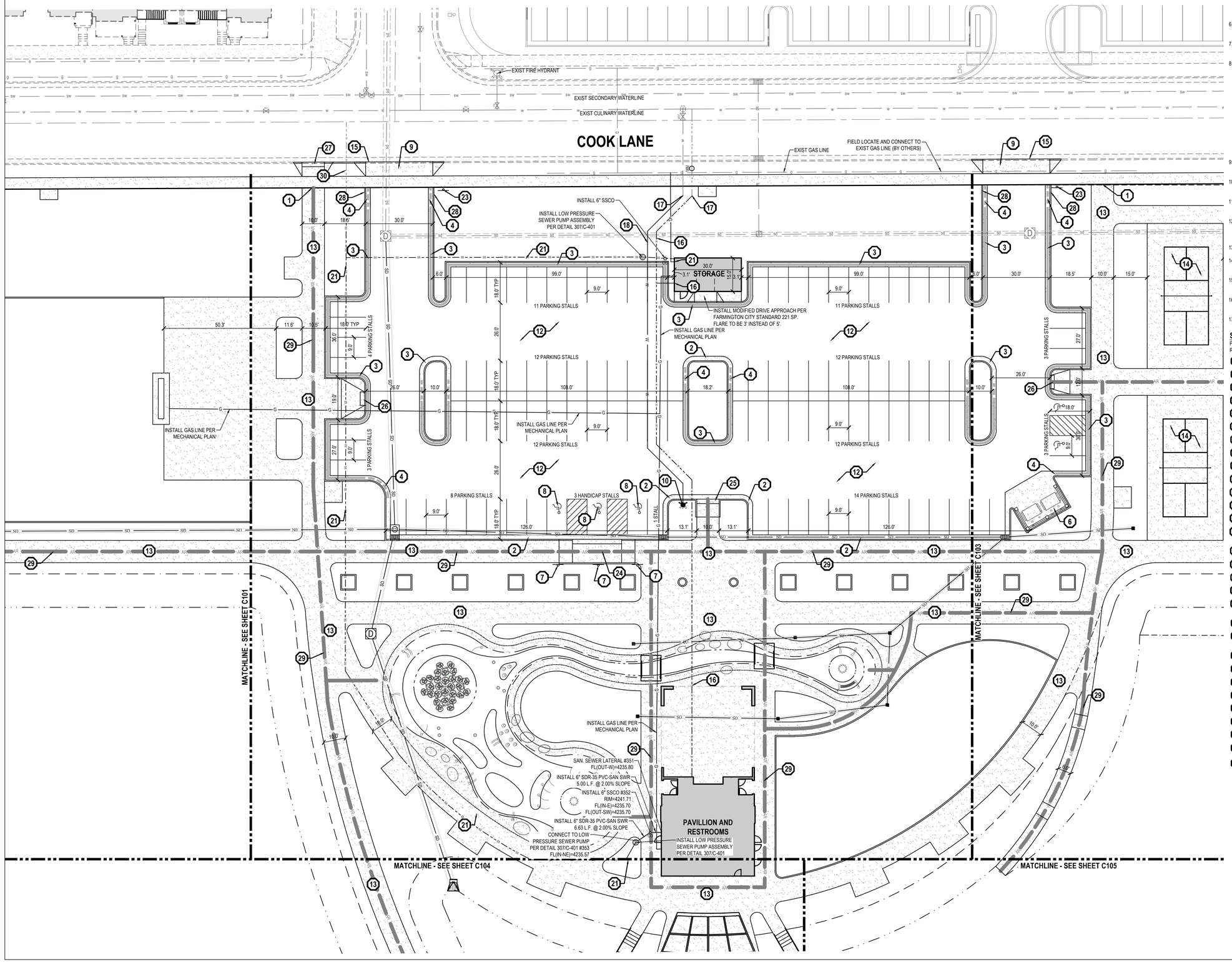

GENERAL NOTES

1. ALL WORK TO COMPLY WITH THE GOVERNING AGENCY'S STANDARDS AND SPECIFICATIONS.
2. ALL IMPROVEMENTS MUST COMPLY WITH ADA STANDARDS AND RECOMMENDATIONS.
3. SEE LANDSCAPE/ARCHITECTURAL PLANS FOR CONCRETE MATERIAL, COLOR, FINISH, DETAILS, SCORE PATTERNS THROUGHOUT SITE, AND MONOLITHIC POUR AT INTERSECTIONS.
4. ALL PAVEMENT MARKINGS SHALL CONFORM TO THE LATEST EDITION OF THE M.U.T.C.D. (MANUAL ON UNIFORM TRAFFIC CONTROL DEVICES).
5. ALL SURFACE IMPROVEMENTS DISTURBED BY CONSTRUCTION SHALL BE RESTORED OR REPLACED, INCLUDING TREES AND DECORATIVE SHRUBS, SOD, FENCES, WALLS AND STRUCTURES, WHETHER OR NOT THEY ARE SPECIFICALLY SHOWN ON THE CONTRACT DOCUMENTS.
6. NOTIFY ENGINEER OF ANY DISCREPANCIES IN DESIGN OR STAKING BEFORE PLACING CONCRETE OR ASPHALT.
7. THE CONTRACTOR IS TO PROTECT AND PRESERVE ALL EXISTING IMPROVEMENTS, UTILITIES, AND SIGNS, ETC. UNLESS OTHERWISE NOTED ON THESE PLANS.
8. EXISTING UNDERGROUND UTILITIES AND IMPROVEMENTS ARE SHOWN IN THEIR APPROXIMATE LOCATIONS BASED UPON RECORD INFORMATION AVAILABLE AT THE TIME OF PREPARATION OF THESE PLANS. LOCATIONS MAY NOT HAVE BEEN VERIFIED IN THE FIELD AND NO GUARANTEE IS MADE AS TO THE ACCURACY OR COMPLETENESS OF THE INFORMATION SHOWN. IT SHALL BE THE RESPONSIBILITY OF THE CONTRACTOR TO DETERMINE THE EXISTENCE AND LOCATION OF THE UTILITIES SHOWN ON THESE PLANS OR INDICATED IN THE FIELD BY LOCATING SERVICES. ANY ADDITIONAL COSTS INCURRED AS A RESULT OF THE CONTRACTOR'S FAILURE TO VERIFY THE LOCATIONS OF EXISTING UTILITIES PRIOR TO THE BEGINNING OF CONSTRUCTION IN THEIR VICINITY SHALL BE BORNE BY THE CONTRACTOR AND ASSUMED INCLUDED IN THE CONTRACT. THE CONTRACTOR IS TO VERIFY ALL CONNECTION POINTS WITH THE EXISTING UTILITIES. THE CONTRACTOR IS RESPONSIBLE FOR ANY DAMAGE CAUSED TO THE EXISTING UTILITIES AND UTILITY STRUCTURES THAT ARE TO REMAIN. IF CONFLICTS WITH EXISTING UTILITIES OCCUR, THE CONTRACTOR SHALL NOTIFY THE ENGINEER PRIOR TO CONSTRUCTION TO DETERMINE IF ANY FIELD ADJUSTMENTS SHOULD BE MADE.
9. ALL SANITARY SEWER INFRASTRUCTURE TO BE INSTALLED PER GOVERNING AGENCY STANDARD PLANS AND SPECIFICATIONS.
10. ALL WATER INFRASTRUCTURE TO BE INSTALLED PER GOVERNING AGENCY OR APWA STANDARD PLANS AND SPECIFICATIONS.
11. DEFLECT OR LOOP ALL WATERLINES TO AVOID CONFLICTS WITH OTHER UTILITIES PER GOVERNING AGENCY'S STANDARDS AND SPECIFICATIONS.
12. PROJECT SHALL COMPLY WITH ALL UTAH DIVISION OF DRINKING WATER RULES AND REGULATIONS INCLUDING, BUT NOT LIMITED TO, THOSE PERTAINING TO BACKFLOW PROTECTION AND CROSS CONNECTION PREVENTION.
13. THE CONTRACTOR IS TO COORDINATE ALL UTILITIES WITH MECHANICAL/PLUMBING PLANS.
14. NOTIFY ENGINEER OF ANY DISCREPANCIES IN DESIGN OR STAKING BEFORE PLACING UTILITY STRUCTURES OR PIPES.
15. THE CONTRACTOR SHALL ADJUST TO GRADE ALL EXISTING UTILITIES AS NEEDED PER LOCAL GOVERNING AGENCY'S STANDARDS AND SPECIFICATIONS.
16. ALL UTILITIES LOCATED WITHIN ANY PRIVATE STREET SHALL BE PRIVATELY OWNED AND MAINTAINED.
17. CONTRACTOR TO COORDINATE SITE LIGHTING WITH ELECTRICAL PLANS. NOTIFY ENGINEER OF ANY DISCREPANCIES.

SCOPE OF WORK:

PROVIDE, INSTALL AND/OR CONSTRUCT THE FOLLOWING PER THE SPECIFICATIONS GIVEN OR REFERENCED, THE DETAILS NOTED, AND/OR AS SHOWN ON THE CONSTRUCTION DRAWINGS:

1. MATCH EXISTING IMPROVEMENTS
2. INSTALL 30" CURB AND GUTTER PER DETAIL 1/C400
3. INSTALL 30" REVERSE PAN CURB AND GUTTER PER DETAIL 2/C400
4. TRANSITION FROM 30" REVERSE PAN TO 30" STANDARD CURB AND GUTTER
5. INSTALL PAVEMENT FOR TRASH ENCLOSURE PER DETAIL 4/C400
6. INSTALL TRASH ENCLOSURE PER ARCHITECTURAL PLANS
7. INSTALL HANDICAP ACCESSIBLE PARKING SIGN PER DETAIL 7/C400
8. INSTALL HANDICAP ACCESSIBLE PARKING PAVEMENT MARKING PER DETAIL 8/C400
9. INSTALL DRIVEWAY APPROACH PER FARMINGTON STANDARD DETAIL 221/C-401
10. INSTALL CLOW FIRE HYDRANT PER FARMINGTON STANDARD DETAIL 511 SP
11. NOT USED
12. INSTALL LIGHT DUTY PAVEMENT PER DETAIL 6/C400
13. INSTALL CONCRETE SIDEWALK PER DETAIL 3/C400. WIDTH PER PLAN
14. PICKLEBALL AND BASKETBALL COURTS TO BE POST TENSION CONCRETE. SEE STRUCTURAL DRAWINGS FOR DETAILS.
15. SAWCUT AND REMOVE BACK OF CURB FOR DRIVE APPROACH INSTALLATION
16. INSTALL 2" CULINARY WATER SERVICE LATERAL WITH 2" METER
17. FIELD LOCATE AND CONNECT TO EXIST CULINARY WATERLINE
18. INSTALL 6" C900 PVC CULINARY WATERLINE TO HYDRANT
19. FIELD LOCATE AND CONNECT TO EXIST SANITARY SEWER STUB CONTRACTOR TO FIELD VERIFY SIZE AND LOCATION OF STUB AND NOTIFY ENGINEER OF ANY DISCREPANCIES.
20. INSTALL 1-1/2" HDPE SDR-11 LATERAL TO MAIN SEE DETAIL 6/C-401.
21. INSTALL 1-1/4" HDPE SDR-11 PRESSURE SANITARY SEWER SERVICE LATERAL WITH CLEANOUT PER DETAIL 6/C-401.
22. FIELD LOCATE AND CONNECT TO EXIST SECONDARY WATER STUB
23. INSTALL PUBLIC "STOP" SIGN PER M.U.T.C.D. STANDARDS WITH STREET SIGNS
24. INSTALL HANDICAP ACCESSIBLE RAMP WITH DETECTABLE SURFACE PER DETAIL 1/C401
25. INSTALL HANDICAP ACCESSIBLE RAMP WITH DETECTABLE SURFACE PER DETAIL 2/C401
26. INSTALL HANDICAP ACCESSIBLE RAMP WITH DETECTABLE SURFACE PER DETAIL 3/C401
27. INSTALL HANDICAP ACCESSIBLE RAMP WITH DETECTABLE SURFACE PER DETAIL 4/C401
28. TAPER BACK OF CURB TO ZERO REVEAL AT SIDEWALK
29. ADA ACCESSIBLE ROUTE
30. FIELD LOCATE AND CONNECT TO EXISTING SANITARY SEWER LATERAL. EXACT LOCATION IS UNKNOWN.

NORTH

HORIZONTAL GRAPHIC SCALE

20 0 10 20 40

(IN FEET)

HORZ. 1 inch = 20 ft.

FOR CONSTRUCTION

APPROVED FOR CONSTRUCTION

BY: _____ DATE: _____

CITY ENGINEER

blu line designs
planning | landscape architecture | design
8719 S. Sandy Parkway
Sandy, UT 84070
p 801.913.7994

ENSIGN
THE STANDARD IN ENGINEERING
LAYTON
919 North 400 West
Layton, UT 84041
Phone: 801.547.1100
WWW.ENSIGNENG.COM
ENSIGN PROJECT # 12281

IVY ACRES PARK

1397 WEST COOK LANE (500 NORTH)
FARMINGTON, UT

REVISIONS

NO.	APPROVED	DESCRIPTION

PROFESSIONAL ENGINEER
REGISTERED
No. 5049039
3-20-24
CHRISTOPHER HESS PRESTON
STATE OF UTAH

Designed By:	I.BUCKLEY
Drawn By:	M.ELMER
Date:	3/20/24
Checked By:	C.PRESTON
Project No:	22-246

Drawing Title

SITE UTILITY PLAN

Drawing number

C102

811 Know what's below. Call before you dig.

CALL BLUESTAKES @ 811 AT LEAST 48 HOURS PRIOR TO THE COMMENCEMENT OF ANY CONSTRUCTION.

BENCHMARK

SOUTH QUARTER CORNER OF SECTION 14, TOWNSHIP 3 NORTH, RANGE 1 WEST SALT LAKE BASE AND MERIDIAN

ELEV = 4229.59'

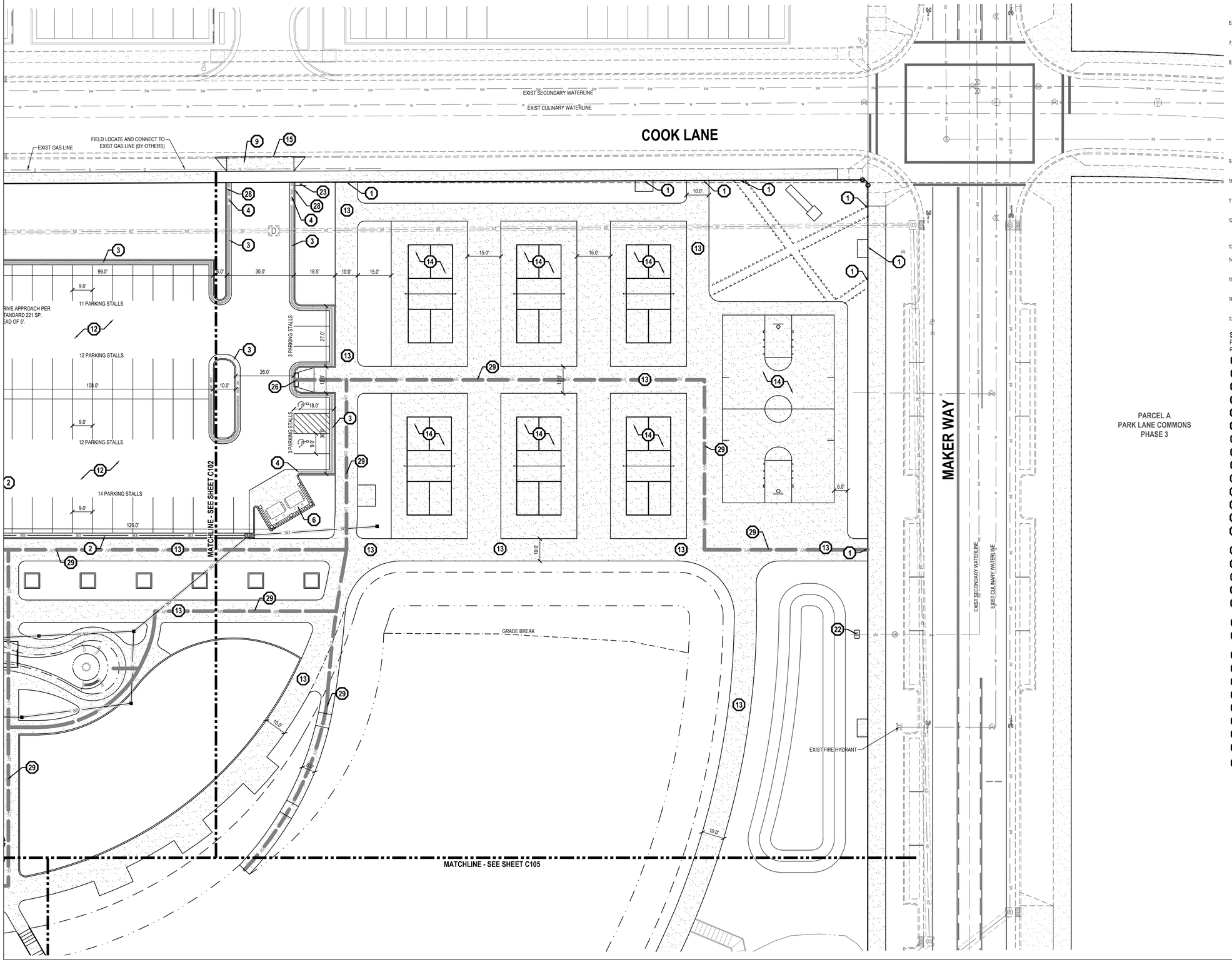

GENERAL NOTES

1. ALL WORK TO COMPLY WITH THE GOVERNING AGENCY'S STANDARDS AND SPECIFICATIONS.
2. ALL IMPROVEMENTS MUST COMPLY WITH ADA STANDARDS AND RECOMMENDATIONS.
3. SEE LANDSCAPE/ARCHITECTURAL PLANS FOR CONCRETE MATERIAL, COLOR, FINISH, DETAILS, SCORE PATTERNS THROUGHOUT SITE, AND MONOLITHIC POUR AT INTERSECTIONS.
4. ALL PAVEMENT MARKINGS SHALL CONFORM TO THE LATEST EDITION OF THE M.U.T.C.D. (MANUAL ON UNIFORM TRAFFIC CONTROL DEVICES).
5. ALL SURFACE IMPROVEMENTS DISTURBED BY CONSTRUCTION SHALL BE RESTORED OR REPLACED, INCLUDING TREES AND DECORATIVE SHRUBS, SOD, FENCES, WALLS AND STRUCTURES, WHETHER OR NOT THEY ARE SPECIFICALLY SHOWN ON THE CONTRACT DOCUMENTS.
6. NOTIFY ENGINEER OF ANY DISCREPANCIES IN DESIGN OR STAKING BEFORE PLACING CONCRETE OR ASPHALT.
7. THE CONTRACTOR IS TO PROTECT AND PRESERVE ALL EXISTING IMPROVEMENTS, UTILITIES, AND SIGNS, ETC. UNLESS OTHERWISE NOTED ON THESE PLANS.
8. EXISTING UNDERGROUND UTILITIES AND IMPROVEMENTS ARE SHOWN IN THEIR APPROXIMATE LOCATIONS BASED UPON RECORD INFORMATION AVAILABLE AT THE TIME OF PREPARATION OF THESE PLANS. LOCATIONS MAY NOT HAVE BEEN VERIFIED IN THE FIELD AND NO GUARANTEE IS MADE AS TO THE ACCURACY OR COMPLETENESS OF THE INFORMATION SHOWN. IT SHALL BE THE RESPONSIBILITY OF THE CONTRACTOR TO DETERMINE THE EXISTENCE AND LOCATION OF THE UTILITIES SHOWN ON THESE PLANS OR INDICATED IN THE FIELD BY LOCATING SERVICES. ANY ADDITIONAL COSTS INCURRED AS A RESULT OF THE CONTRACTOR'S FAILURE TO VERIFY THE LOCATIONS OF EXISTING UTILITIES PRIOR TO THE BEGINNING OF CONSTRUCTION IN THEIR VICINITY SHALL BE BORNE BY THE CONTRACTOR AND ASSUMED INCLUDED IN THE CONTRACT. THE CONTRACTOR IS TO VERIFY ALL CONNECTION POINTS WITH THE EXISTING UTILITIES. THE CONTRACTOR IS RESPONSIBLE FOR ANY DAMAGE CAUSED TO THE EXISTING UTILITIES AND UTILITY STRUCTURES THAT ARE TO REMAIN. IF CONFLICTS WITH EXISTING UTILITIES OCCUR, THE CONTRACTOR SHALL NOTIFY THE ENGINEER PRIOR TO CONSTRUCTION TO DETERMINE IF ANY FIELD ADJUSTMENTS SHOULD BE MADE.
9. ALL SANITARY SEWER INFRASTRUCTURE TO BE INSTALLED PER GOVERNING AGENCY STANDARD PLANS AND SPECIFICATIONS.
10. ALL WATER INFRASTRUCTURE TO BE INSTALLED PER GOVERNING AGENCY OR APWA STANDARD PLANS AND SPECIFICATIONS.
11. DEFLECT OR LOOP ALL WATERLINES TO AVOID CONFLICTS WITH OTHER UTILITIES PER GOVERNING AGENCY'S STANDARDS AND SPECIFICATIONS.
12. PROJECT SHALL COMPLY WITH ALL UTAH DIVISION OF DRINKING WATER RULES AND REGULATIONS INCLUDING, BUT NOT LIMITED TO, THOSE PERTAINING TO BACKFLOW PROTECTION AND CROSS CONNECTION PREVENTION.
13. THE CONTRACTOR IS TO COORDINATE ALL UTILITIES WITH MECHANICAL/PLUMBING PLANS.
14. NOTIFY ENGINEER OF ANY DISCREPANCIES IN DESIGN OR STAKING BEFORE PLACING UTILITY STRUCTURES OR PIPES.
15. THE CONTRACTOR SHALL ADJUST TO GRADE ALL EXISTING UTILITIES AS NEEDED PER LOCAL GOVERNING AGENCY'S STANDARDS AND SPECIFICATIONS.
16. ALL UTILITIES LOCATED WITHIN ANY PRIVATE STREET SHALL BE PRIVATELY OWNED AND MAINTAINED.
17. CONTRACTOR TO COORDINATE SITE LIGHTING WITH ELECTRICAL PLANS. NOTIFY ENGINEER OF ANY DISCREPANCIES.

SCOPE OF WORK:

PROVIDE, INSTALL AND/OR CONSTRUCT THE FOLLOWING PER THE SPECIFICATIONS GIVEN OR REFERENCED, THE DETAILS NOTED, AND/OR AS SHOWN ON THE CONSTRUCTION DRAWINGS:

1. MATCH EXISTING IMPROVEMENTS
2. INSTALL 30" CURB AND GUTTER PER DETAIL 1/C400
3. INSTALL 30" REVERSE PAN CURB AND GUTTER PER DETAIL 2/C400
4. TRANSITION FROM 30" REVERSE PAN TO 30" STANDARD CURB AND GUTTER
5. INSTALL PAVEMENT FOR TRASH ENCLOSURE PER DETAIL 4/C400
6. INSTALL TRASH ENCLOSURE PER ARCHITECTURAL PLANS
7. INSTALL HANDICAP ACCESSIBLE PARKING SIGN PER DETAIL 7/C400
8. INSTALL HANDICAP ACCESSIBLE PARKING PAVEMENT MARKING PER DETAIL 8/C400
9. INSTALL DRIVEWAY APPROACH PER FARMINGTON STANDARD DETAIL 221/C-401
10. INSTALL CLOW FIRE HYDRANT PER FARMINGTON STANDARD DETAIL 511 SP
11. NOT USED
12. INSTALL LIGHT DUTY PAVEMENT PER DETAIL 6/C400
13. INSTALL CONCRETE SIDEWALK PER DETAIL 3/C400. WIDTH PER PLAN
14. PICKLEBALL AND BASKETBALL COURTS TO BE POST TENSION CONCRETE. SEE STRUCTURAL DRAWINGS FOR DETAILS.
15. SAWCUT AND REMOVE BACK OF CURB FOR DRIVE APPROACH INSTALLATION
16. INSTALL 2" CULINARY WATER SERVICE LATERAL WITH 2" METER
17. FIELD LOCATE AND CONNECT TO EXIST CULINARY WATERLINE
18. INSTALL 6" C900 PVC CULINARY WATERLINE TO HYDRANT
19. FIELD LOCATE AND CONNECT TO EXIST SANITARY SEWER STUB CONTRACTOR TO FIELD VERIFY SIZE AND LOCATION OF STUB AND NOTIFY ENGINEER OF ANY DISCREPANCIES.
20. INSTALL 1-1/2" HDPE SDR-11 LATERAL TO MAIN SEE DETAIL 6/C-401.
21. INSTALL 1-1/4" HDPE SDR-11 PRESSURE SANITARY SEWER SERVICE LATERAL WITH CLEANOUT PER DETAIL 6/C-401.
22. FIELD LOCATE AND CONNECT TO EXIST SECONDARY WATER STUB
23. INSTALL PUBLIC "STOP" SIGN PER M.U.T.C.D. STANDARDS WITH STREET SIGNS
24. INSTALL HANDICAP ACCESSIBLE RAMP WITH DETECTABLE SURFACE PER DETAIL 1/C401
25. INSTALL HANDICAP ACCESSIBLE RAMP WITH DETECTABLE SURFACE PER DETAIL 2/C401
26. INSTALL HANDICAP ACCESSIBLE RAMP WITH DETECTABLE SURFACE PER DETAIL 3/C401
27. INSTALL HANDICAP ACCESSIBLE RAMP WITH DETECTABLE SURFACE PER DETAIL 4/C401
28. TAPER BACK OF CURB TO ZERO REVEAL AT SIDEWALK
29. ADA ACCESSIBLE ROUTE
30. FIELD LOCATE AND CONNECT TO EXISTING SANITARY SEWER LATERAL. EXACT LOCATION IS UNKNOWN.

NORTH

HORIZONTAL GRAPHIC SCALE

20 0 10 20 40

(IN FEET)
HORZ: 1 inch = 20 ft.

FOR CONSTRUCTION

APPROVED FOR CONSTRUCTION

BY: _____ DATE: _____
CITY ENGINEER

blu line designs
planning | landscape architecture | design
8719 S. Sandy Parkway
Sandy, UT 84070
p 801.913.7994

ENSIGN
THE STANDARD IN ENGINEERING
LAYTON
919 North 400 West
Layton, UT 84041
Phone: 801.547.1100
WWW.ENSIGNENG.COM
ENSIGN PROJECT # 12281

IVY ACRES PARK

1397 WEST COOK LANE (500 NORTH)
FARMINGTON, UT

REVISIONS

NO.	yy/mm/dd	DESCRIPTION

PROFESSIONAL ENGINEER
CAMERON HESS PRESTON
STATE OF UTAH
PE NO. 10049039
3-20-24

Designed By:	I.BUCKLEY
Drawn By:	M.ELMER
Date:	3/20/24
Checked By:	C.PRESTON
Project No:	22-246

Drawing Title
SITE UTILITY PLAN

Drawing number
C103

811 Know what's below. Call before you dig.

CALL BLUESTAKES @ 811 AT LEAST 48 HOURS PRIOR TO THE COMMENCEMENT OF ANY CONSTRUCTION.

BENCHMARK

SOUTH QUARTER CORNER OF SECTION 14, TOWNSHIP 3 NORTH, RANGE 1 WEST SALT LAKE BASE AND MERIDIAN

ELEV = 4229.59'

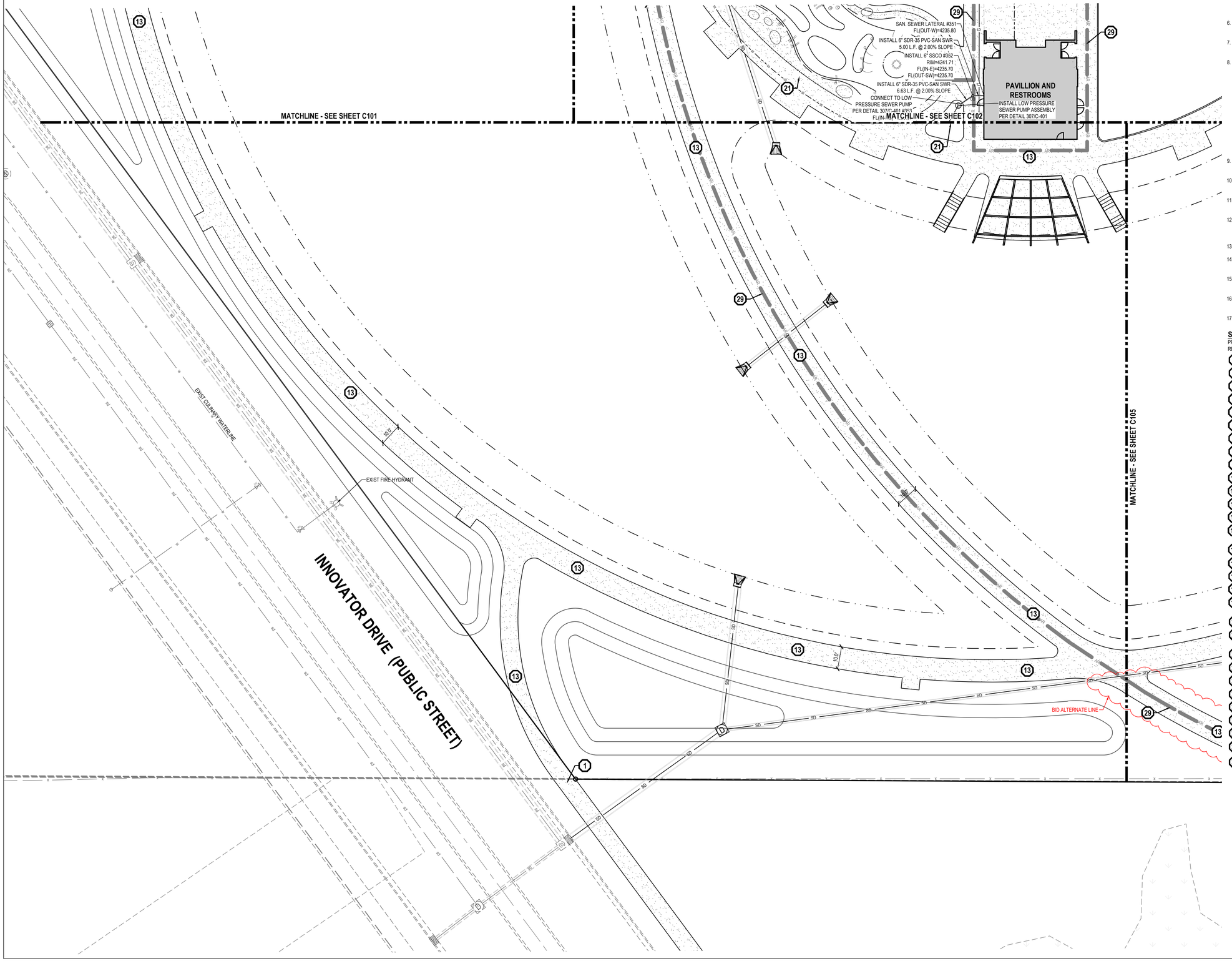

GENERAL NOTES

1. ALL WORK TO COMPLY WITH THE GOVERNING AGENCY'S STANDARDS AND SPECIFICATIONS.
2. ALL IMPROVEMENTS MUST COMPLY WITH ADA STANDARDS AND RECOMMENDATIONS.
3. SEE LANDSCAPE/ARCHITECTURAL PLANS FOR CONCRETE MATERIAL, COLOR, FINISH, DETAILS, SCORE PATTERNS THROUGHOUT SITE, AND MONOLITHIC POUR AT INTERSECTIONS.
4. ALL PAVEMENT MARKINGS SHALL CONFORM TO THE LATEST EDITION OF THE M.U.T.C.D. (MANUAL ON UNIFORM TRAFFIC CONTROL DEVICES).
5. ALL SURFACE IMPROVEMENTS DISTURBED BY CONSTRUCTION SHALL BE RESTORED OR REPLACED, INCLUDING TREES AND DECORATIVE SHRUBS, SOD, FENCES, WALLS AND STRUCTURES, WHETHER OR NOT THEY ARE SPECIFICALLY SHOWN ON THE CONTRACT DOCUMENTS.
6. NOTIFY ENGINEER OF ANY DISCREPANCIES IN DESIGN OR STAKING BEFORE PLACING CONCRETE OR ASPHALT.
7. THE CONTRACTOR IS TO PROTECT AND PRESERVE ALL EXISTING IMPROVEMENTS, UTILITIES, AND SIGNS, ETC. UNLESS OTHERWISE NOTED ON THESE PLANS.
8. EXISTING UNDERGROUND UTILITIES AND IMPROVEMENTS ARE SHOWN IN THEIR APPROXIMATE LOCATIONS BASED UPON RECORD INFORMATION AVAILABLE AT THE TIME OF PREPARATION OF THESE PLANS. LOCATIONS MAY NOT HAVE BEEN VERIFIED IN THE FIELD AND NO GUARANTEE IS MADE AS TO THE ACCURACY OR COMPLETENESS OF THE INFORMATION SHOWN. IT SHALL BE THE RESPONSIBILITY OF THE CONTRACTOR TO DETERMINE THE EXISTENCE AND LOCATION OF THE UTILITIES SHOWN ON THESE PLANS OR INDICATED IN THE FIELD BY LOCATING SERVICES. ANY ADDITIONAL COSTS INCURRED AS A RESULT OF THE CONTRACTOR'S FAILURE TO VERIFY THE LOCATIONS OF EXISTING UTILITIES PRIOR TO THE BEGINNING OF CONSTRUCTION IN THEIR VICINITY SHALL BE BORNE BY THE CONTRACTOR AND ASSUMED INCLUDED IN THE CONTRACT. THE CONTRACTOR IS TO VERIFY ALL CONNECTION POINTS WITH THE EXISTING UTILITIES. THE CONTRACTOR IS RESPONSIBLE FOR ANY DAMAGE CAUSED TO THE EXISTING UTILITIES AND UTILITY STRUCTURES THAT ARE TO REMAIN. IF CONFLICTS WITH EXISTING UTILITIES OCCUR, THE CONTRACTOR SHALL NOTIFY THE ENGINEER PRIOR TO CONSTRUCTION TO DETERMINE IF ANY FIELD ADJUSTMENTS SHOULD BE MADE.
9. ALL SANITARY SEWER INFRASTRUCTURE TO BE INSTALLED PER GOVERNING AGENCY STANDARD PLANS AND SPECIFICATIONS.
10. ALL WATER INFRASTRUCTURE TO BE INSTALLED PER GOVERNING AGENCY OR APWA STANDARD PLANS AND SPECIFICATIONS.
11. DEFLECT OR LOOP ALL WATERLINES TO AVOID CONFLICTS WITH OTHER UTILITIES PER GOVERNING AGENCY'S STANDARDS AND SPECIFICATIONS.
12. PROJECT SHALL COMPLY WITH ALL UTAH DIVISION OF DRINKING WATER RULES AND REGULATIONS INCLUDING, BUT NOT LIMITED TO, THOSE PERTAINING TO BACKFLOW PROTECTION AND CROSS CONNECTION PREVENTION.
13. THE CONTRACTOR IS TO COORDINATE ALL UTILITIES WITH MECHANICAL/PLUMBING PLANS.
14. NOTIFY ENGINEER OF ANY DISCREPANCIES IN DESIGN OR STAKING BEFORE PLACING UTILITY STRUCTURES OR PIPES.
15. THE CONTRACTOR SHALL ADJUST TO GRADE ALL EXISTING UTILITIES AS NEEDED PER LOCAL GOVERNING AGENCY'S STANDARDS AND SPECIFICATIONS.
16. ALL UTILITIES LOCATED WITHIN ANY PRIVATE STREET SHALL BE PRIVATELY OWNED AND MAINTAINED.
17. CONTRACTOR TO COORDINATE SITE LIGHTING WITH ELECTRICAL PLANS. NOTIFY ENGINEER OF ANY DISCREPANCIES.

SCOPE OF WORK:

PROVIDE, INSTALL AND/OR CONSTRUCT THE FOLLOWING PER THE SPECIFICATIONS GIVEN OR REFERENCED, THE DETAILS NOTED, AND/OR AS SHOWN ON THE CONSTRUCTION DRAWINGS:

1. MATCH EXISTING IMPROVEMENTS
2. INSTALL 30" CURB AND GUTTER PER DETAIL 1/C400
3. INSTALL 30" REVERSE PAN CURB AND GUTTER PER DETAIL 2/C400
4. TRANSITION FROM 30" REVERSE PAN TO 30" STANDARD CURB AND GUTTER
5. INSTALL PAVEMENT FOR TRASH ENCLOSURE PER DETAIL 4/C400
6. INSTALL TRASH ENCLOSURE PER ARCHITECTURAL PLANS
7. INSTALL HANDICAP ACCESSIBLE PARKING SIGN PER DETAIL 7/C400
8. INSTALL HANDICAP ACCESSIBLE PARKING PAVEMENT MARKING PER DETAIL 8/C400
9. INSTALL DRIVEWAY APPROACH PER FARMINGTON STANDARD DETAIL 221/C-401
10. INSTALL CLOW FIRE HYDRANT PER FARMINGTON STANDARD DETAIL 511 SP
11. NOT USED
12. INSTALL LIGHT DUTY PAVEMENT PER DETAIL 6/C400
13. INSTALL CONCRETE SIDEWALK PER DETAIL 3/C400. WIDTH PER PLAN
14. PICKLEBALL AND BASKETBALL COURTS TO BE POST TENSION CONCRETE. SEE STRUCTURAL DRAWINGS FOR DETAILS.
15. SAWCUT AND REMOVE BACK OF CURB FOR DRIVE APPROACH INSTALLATION
16. INSTALL 2" CULINARY WATER SERVICE LATERAL WITH 2" METER
17. FIELD LOCATE AND CONNECT TO EXIST CULINARY WATERLINE
18. INSTALL 6" C900 PVC CULINARY WATERLINE TO HYDRANT
19. FIELD LOCATE AND CONNECT TO EXIST SANITARY SEWER STUB CONTRACTOR TO FIELD VERIFY SIZE AND LOCATION OF STUB AND NOTIFY ENGINEER OF ANY DISCREPANCIES.
20. INSTALL 1-1/2" HDPE SDR-11 LATERAL TO MAIN SEE DETAIL 6/C-401.
21. INSTALL 1-1/4" HDPE SDR-11 PRESSURE SANITARY SEWER SERVICE LATERAL WITH CLEANOUT PER DETAIL 6/C-401.
22. FIELD LOCATE AND CONNECT TO EXIST SECONDARY WATER STUB
23. INSTALL PUBLIC "STOP" SIGN PER M.U.T.C.D. STANDARDS WITH STREET SIGNS
24. INSTALL HANDICAP ACCESSIBLE RAMP WITH DETECTABLE SURFACE PER DETAIL 1/C401
25. INSTALL HANDICAP ACCESSIBLE RAMP WITH DETECTABLE SURFACE PER DETAIL 2/C401
26. INSTALL HANDICAP ACCESSIBLE RAMP WITH DETECTABLE SURFACE PER DETAIL 3/C401
27. INSTALL HANDICAP ACCESSIBLE RAMP WITH DETECTABLE SURFACE PER DETAIL 4/C401
28. TAPER BACK OF CURB TO ZERO REVEAL AT SIDEWALK
29. ADA ACCESSIBLE ROUTE
30. FIELD LOCATE AND CONNECT TO EXISTING SANITARY SEWER LATERAL. EXACT LOCATION IS UNKNOWN.

NORTH

HORIZONTAL GRAPHIC SCALE

20 0 10 20 40

(IN FEET)
HORZ: 1 inch = 20 ft.

FOR CONSTRUCTION

APPROVED FOR CONSTRUCTION

BY: _____ DATE: _____
CITY ENGINEER

blu line designs
planning | landscape architecture | design
8719 S. Sandy Parkway
Sandy, UT 84070
p 801.913.7994

ENSIGN
THE STANDARD IN ENGINEERING
LAYTON
919 North 400 West
Layton, UT 84041
Phone: 801.547.1100
WWW.ENSIGNENG.COM
ENSIGN PROJECT # 12281

IVY ACRES PARK

1397 WEST COOK LANE (500 NORTH)
FARMINGTON, UT

REVISIONS

NO.	(yr/mm/dd)	DESCRIPTION

PROFESSIONAL ENGINEER
CAMERON NESS PRESTON
STATE OF UTAH
NO. 5349039
1-21-24

Designed By:	I.BUCKLEY
Drawn By:	M.ELMER
Date:	4/29/24
Checked By:	C.PRESTON
Project No:	22-246

Drawing Title
SITE UTILITY PLAN

Drawing number
C104

811 Know what's below. Call before you dig.

CALL BLUESTAKES @ 811 AT LEAST 48 HOURS PRIOR TO THE COMMENCEMENT OF ANY CONSTRUCTION.

BENCHMARK

SOUTH QUARTER CORNER OF SECTION 14, TOWNSHIP 3 NORTH, RANGE 1 WEST SALT LAKE BASE AND MERIDIAN

ELEV = 4229.59'

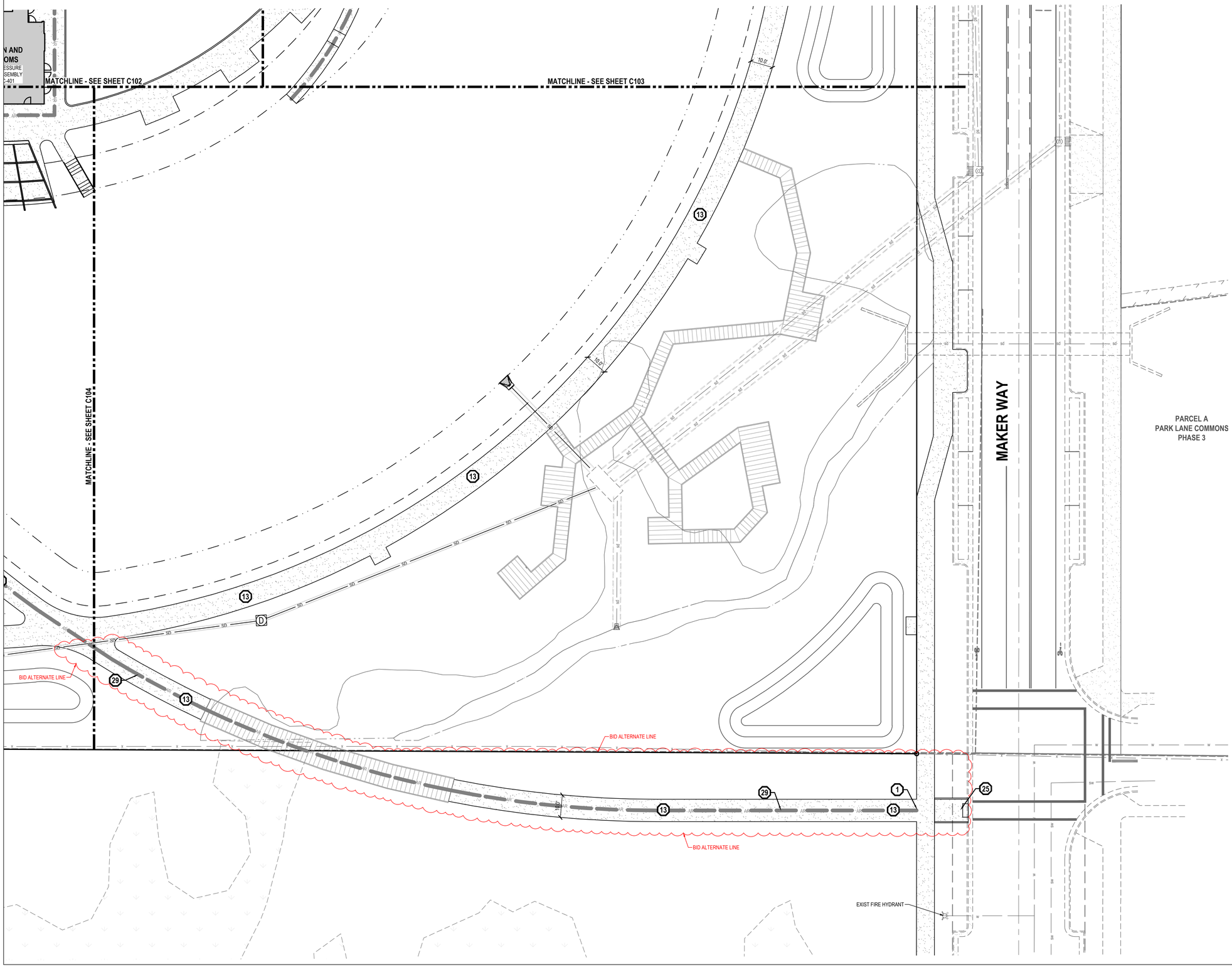

GENERAL NOTES

1. ALL WORK TO COMPLY WITH THE GOVERNING AGENCY'S STANDARDS AND SPECIFICATIONS.
2. ALL IMPROVEMENTS MUST COMPLY WITH ADA STANDARDS AND RECOMMENDATIONS.
3. SEE LANDSCAPE/ARCHITECTURAL PLANS FOR CONCRETE MATERIAL, COLOR, FINISH, DETAILS, SCORE PATTERNS THROUGHOUT SITE, AND MONOLITHIC POUR AT INTERSECTIONS.
4. ALL PAVEMENT MARKINGS SHALL CONFORM TO THE LATEST EDITION OF THE M.U.T.C.D. (MANUAL ON UNIFORM TRAFFIC CONTROL DEVICES).
5. ALL SURFACE IMPROVEMENTS DISTURBED BY CONSTRUCTION SHALL BE RESTORED OR REPLACED, INCLUDING TREES AND DECORATIVE SHRUBS, SOD, FENCES, WALLS AND STRUCTURES, WHETHER OR NOT THEY ARE SPECIFICALLY SHOWN ON THE CONTRACT DOCUMENTS.
6. NOTIFY ENGINEER OF ANY DISCREPANCIES IN DESIGN OR STAKING BEFORE PLACING CONCRETE OR ASPHALT.
7. THE CONTRACTOR IS TO PROTECT AND PRESERVE ALL EXISTING IMPROVEMENTS, UTILITIES, AND SIGNS, ETC. UNLESS OTHERWISE NOTED ON THESE PLANS.
8. EXISTING UNDERGROUND UTILITIES AND IMPROVEMENTS ARE SHOWN IN THEIR APPROXIMATE LOCATIONS BASED UPON RECORD INFORMATION AVAILABLE AT THE TIME OF PREPARATION OF THESE PLANS. LOCATIONS MAY NOT HAVE BEEN VERIFIED IN THE FIELD AND NO GUARANTEE IS MADE AS TO THE ACCURACY OR COMPLETENESS OF THE INFORMATION SHOWN. IT SHALL BE THE RESPONSIBILITY OF THE CONTRACTOR TO DETERMINE THE EXISTENCE AND LOCATION OF THE UTILITIES SHOWN ON THESE PLANS OR INDICATED IN THE FIELD BY LOCATING SERVICES. ANY ADDITIONAL COSTS INCURRED AS A RESULT OF THE CONTRACTOR'S FAILURE TO VERIFY THE LOCATIONS OF EXISTING UTILITIES PRIOR TO THE BEGINNING OF CONSTRUCTION IN THEIR VICINITY SHALL BE BORNE BY THE CONTRACTOR AND ASSUMED INCLUDED IN THE CONTRACT. THE CONTRACTOR IS TO VERIFY ALL CONNECTION POINTS WITH THE EXISTING UTILITIES. THE CONTRACTOR IS RESPONSIBLE FOR ANY DAMAGE CAUSED TO THE EXISTING UTILITIES AND UTILITY STRUCTURES THAT ARE TO REMAIN. IF CONFLICTS WITH EXISTING UTILITIES OCCUR, THE CONTRACTOR SHALL NOTIFY THE ENGINEER PRIOR TO CONSTRUCTION TO DETERMINE IF ANY FIELD ADJUSTMENTS SHOULD BE MADE.
9. ALL SANITARY SEWER INFRASTRUCTURE TO BE INSTALLED PER GOVERNING AGENCY STANDARD PLANS AND SPECIFICATIONS.
10. ALL WATER INFRASTRUCTURE TO BE INSTALLED PER GOVERNING AGENCY OR APWA STANDARD PLANS AND SPECIFICATIONS.
11. DEFLECT OR LOOP ALL WATERLINES TO AVOID CONFLICTS WITH OTHER UTILITIES PER GOVERNING AGENCY'S STANDARDS AND SPECIFICATIONS.
12. PROJECT SHALL COMPLY WITH ALL UTAH DIVISION OF DRINKING WATER RULES AND REGULATIONS INCLUDING, BUT NOT LIMITED TO, THOSE PERTAINING TO BACKFLOW PROTECTION AND CROSS CONNECTION PREVENTION.
13. THE CONTRACTOR IS TO COORDINATE ALL UTILITIES WITH MECHANICAL/PLUMBING PLANS.
14. NOTIFY ENGINEER OF ANY DISCREPANCIES IN DESIGN OR STAKING BEFORE PLACING UTILITY STRUCTURES OR PIPES.
15. THE CONTRACTOR SHALL ADJUST TO GRADE ALL EXISTING UTILITIES AS NEEDED PER LOCAL GOVERNING AGENCY'S STANDARDS AND SPECIFICATIONS.
16. ALL UTILITIES LOCATED WITHIN ANY PRIVATE STREET SHALL BE PRIVATELY OWNED AND MAINTAINED.
17. CONTRACTOR TO COORDINATE SITE LIGHTING WITH ELECTRICAL PLANS. NOTIFY ENGINEER OF ANY DISCREPANCIES.

SCOPE OF WORK:

PROVIDE, INSTALL AND/OR CONSTRUCT THE FOLLOWING PER THE SPECIFICATIONS GIVEN OR REFERENCED, THE DETAILS NOTED, AND/OR AS SHOWN ON THE CONSTRUCTION DRAWINGS:

1. MATCH EXISTING IMPROVEMENTS
2. INSTALL 30" CURB AND GUTTER PER DETAIL 1/C400
3. INSTALL 30" REVERSE PAN CURB AND GUTTER PER DETAIL 2/C400
4. TRANSITION FROM 30" REVERSE PAN TO 30" STANDARD CURB AND GUTTER
5. INSTALL PAVEMENT FOR TRASH ENCLOSURE PER DETAIL 4/C400
6. INSTALL TRASH ENCLOSURE PER ARCHITECTURAL PLANS
7. INSTALL HANDICAP ACCESSIBLE PARKING SIGN PER DETAIL 7/C400
8. INSTALL HANDICAP ACCESSIBLE PARKING PAVEMENT MARKING PER DETAIL 8/C400
9. INSTALL DRIVEWAY APPROACH PER FARMINGTON STANDARD DETAIL 221/C-401
10. INSTALL CLOW FIRE HYDRANT PER FARMINGTON STANDARD DETAIL 511 SP
11. NOT USED
12. INSTALL LIGHT DUTY PAVEMENT PER DETAIL 6/C400
13. INSTALL CONCRETE SIDEWALK PER DETAIL 3/C400. WIDTH PER PLAN
14. PICKLEBALL AND BASKETBALL COURTS TO BE POST TENSION CONCRETE. SEE STRUCTURAL DRAWINGS FOR DETAILS.
15. SAWCUT AND REMOVE BACK OF CURB FOR DRIVE APPROACH INSTALLATION
16. INSTALL 2" CULINARY WATER SERVICE LATERAL WITH 2" METER
17. FIELD LOCATE AND CONNECT TO EXIST CULINARY WATERLINE
18. INSTALL 6" C900 PVC CULINARY WATERLINE TO HYDRANT
19. FIELD LOCATE AND CONNECT TO EXIST SANITARY SEWER STUB CONTRACTOR TO FIELD VERIFY SIZE AND LOCATION OF STUB AND NOTIFY ENGINEER OF ANY DISCREPANCIES.
20. INSTALL 1-1/2" HDPE SDR-11 LATERAL TO MAIN SEE DETAIL 6/C-401.
21. INSTALL 1-1/4" HDPE SDR-11 PRESSURE SANITARY SEWER SERVICE LATERAL WITH CLEANOUT PER DETAIL 6/C-401.
22. FIELD LOCATE AND CONNECT TO EXIST SECONDARY WATER STUB
23. INSTALL PUBLIC "STOP" SIGN PER M.U.T.C.D. STANDARDS WITH STREET SIGNS
24. INSTALL HANDICAP ACCESSIBLE RAMP WITH DETECTABLE SURFACE PER DETAIL 1/C401
25. INSTALL HANDICAP ACCESSIBLE RAMP WITH DETECTABLE SURFACE PER DETAIL 2/C401
26. INSTALL HANDICAP ACCESSIBLE RAMP WITH DETECTABLE SURFACE PER DETAIL 3/C401
27. INSTALL HANDICAP ACCESSIBLE RAMP WITH DETECTABLE SURFACE PER DETAIL 4/C401
28. TAPER BACK OF CURB TO ZERO REVEAL AT SIDEWALK
29. ADA ACCESSIBLE ROUTE
30. FIELD LOCATE AND CONNECT TO EXISTING SANITARY SEWER LATERAL. EXACT LOCATION IS UNKNOWN.

APPROVED FOR CONSTRUCTION

BY: _____ DATE: _____
CITY ENGINEER

FOR CONSTRUCTION

blu line designs
planning | landscape architecture | design
8719 S. Sandy Parkway
Sandy, UT 84070
p 801.913.7994

ENSIGN
THE STANDARD IN ENGINEERING
LAYTON
919 North 400 West
Layton, UT 84041
Phone: 801.547.1100
WWW.ENSIGNENG.COM
ENSIGN PROJECT # 12281

IVY ACRES PARK

1397 WEST COOK LANE (500 NORTH)
FARMINGTON, UT

REVISIONS

NO.	APPROVED	DESCRIPTION

PROFESSIONAL ENGINEER — No. 9149039 — 4-29-24 — STATE OF UTAH — CAMERON HESS PRESTON

Designed By:	I.BUCKLEY
Drawn By:	M.ELMER
Date:	4/29/24
Checked By:	C.PRESTON
Project No:	22-246

Drawing Title

SITE UTILITY PLAN

Drawing number

C105

811 Know what's below. Call before you dig.

CALL BLUESTAKES @ 811 AT LEAST 48 HOURS PRIOR TO THE COMMENCEMENT OF ANY CONSTRUCTION.

BENCHMARK

SOUTH QUARTER CORNER OF SECTION 14, TOWNSHIP 3 NORTH, RANGE 1 WEST SALT LAKE BASE AND MERIDIAN

ELEV = 4229.59'

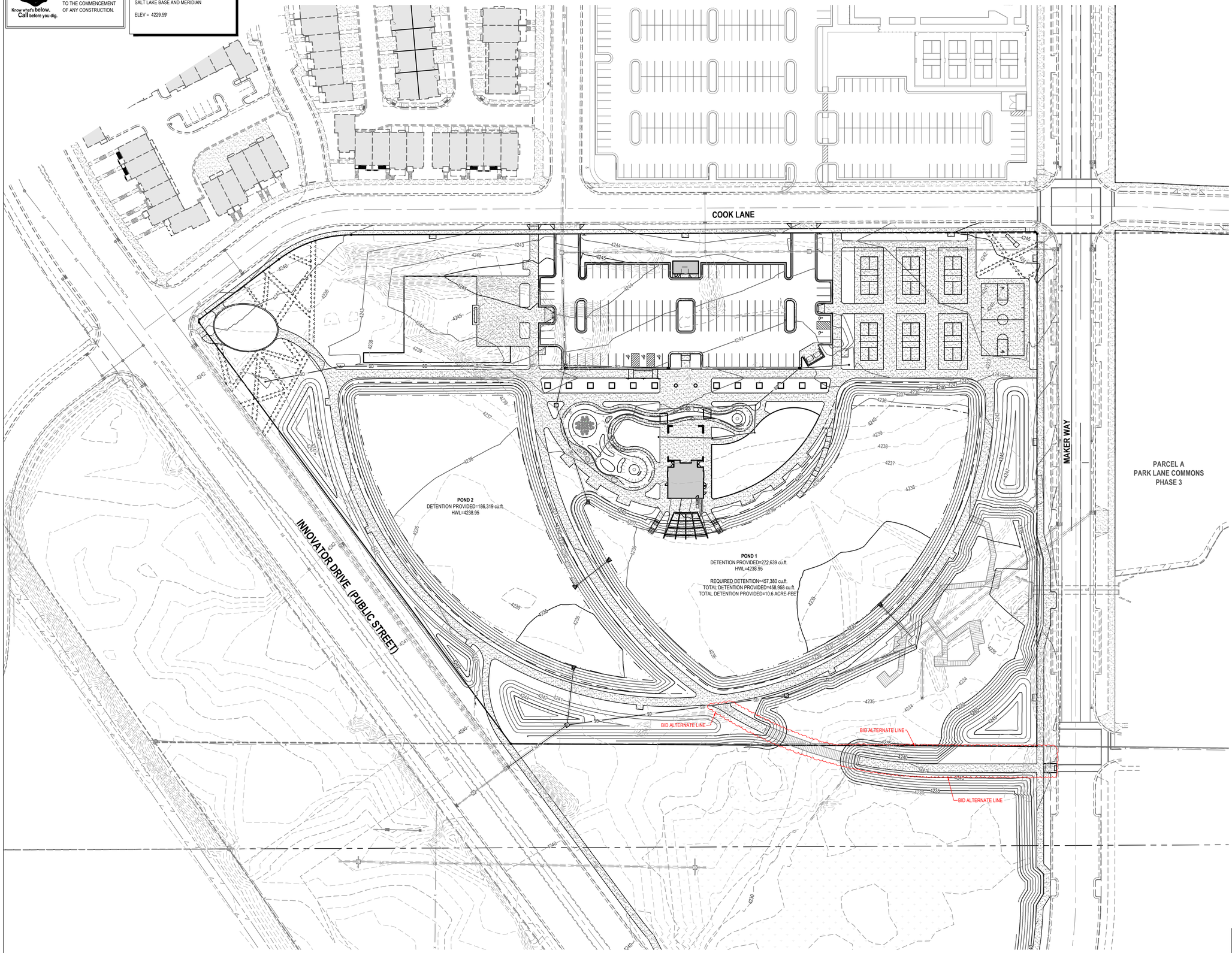

GENERAL NOTES

1. ALL WORK TO COMPLY WITH THE GOVERNING AGENCY'S STANDARDS AND SPECIFICATIONS.
2. ALL IMPROVEMENTS MUST COMPLY WITH ADA STANDARDS AND RECOMMENDATIONS.
3. ALL WORK SHALL COMPLY WITH THE RECOMMENDATIONS OF THE GEOTECHNICAL ENGINEER POSSIBLY INCLUDING, BUT NOT LIMITED TO, REMOVAL OF UNCONSOLIDATED FILL, ORGANICS, AND DEBRIS, PLACEMENT OF SUBSURFACE DRAIN LINES AND GEOTEXTILE, AND OVEREXCAVATION OF UNSUITABLE BEARING MATERIALS AND PLACEMENT OF ACCEPTABLE FILL MATERIAL.
4. THE CONTRACTOR SHALL BECOME FAMILIAR WITH THE EXISTING SOIL CONDITIONS.
5. LANDSCAPED AREAS REQUIRE SUBGRADE TO BE MAINTAINED AT A SPECIFIC ELEVATION BELOW FINISHED GRADE AND REQUIRE SUBGRADE TO BE PROPERLY PREPARED AND SCARIFIED. SEE LANDSCAPE PLANS FOR ADDITIONAL INFORMATION.
6. SLOPE ALL LANDSCAPED AREAS AWAY FROM BUILDING FOUNDATIONS TOWARD CURB AND GUTTER OR STORM DRAIN INLETS.
7. EXISTING UNDERGROUND UTILITIES AND IMPROVEMENTS ARE SHOWN IN THEIR APPROXIMATE LOCATIONS BASED UPON RECORD INFORMATION AVAILABLE AT THE TIME OF PREPARATION OF THESE PLANS. LOCATIONS MAY NOT HAVE BEEN VERIFIED IN THE FIELD AND NO GUARANTEE IS MADE AS TO THE ACCURACY OR COMPLETENESS OF THE INFORMATION SHOWN. IT SHALL BE THE RESPONSIBILITY OF THE CONTRACTOR TO DETERMINE THE EXISTENCE AND LOCATION OF THE UTILITIES SHOWN ON THESE PLANS OR INDICATED IN THE FIELD BY LOCATING SERVICES. ANY ADDITIONAL COSTS INCURRED AS A RESULT OF THE CONTRACTOR'S FAILURE TO VERIFY THE LOCATIONS OF EXISTING UTILITIES PRIOR TO THE BEGINNING OF CONSTRUCTION IN THEIR VICINITY SHALL BE BORNE BY THE CONTRACTOR AND ASSUMED INCLUDED IN THE CONTRACT. THE CONTRACTOR IS TO VERIFY ALL CONNECTION POINTS WITH THE EXISTING UTILITIES. THE CONTRACTOR IS RESPONSIBLE FOR ANY DAMAGE CAUSED TO THE EXISTING UTILITIES AND UTILITY STRUCTURES THAT ARE TO REMAIN. IF CONFLICTS WITH EXISTING UTILITIES OCCUR, THE CONTRACTOR SHALL NOTIFY THE ENGINEER PRIOR TO CONSTRUCTION TO DETERMINE IF ANY FIELD ADJUSTMENTS SHOULD BE MADE.
8. ALL STORM DRAIN INFRASTRUCTURE TO BE INSTALLED PER GOVERNING AGENCY OR APWA STANDARD PLANS AND SPECIFICATIONS.
9. ENSURE MINIMUM COVER OVER ALL STORM DRAIN PIPES PER MANUFACTURER'S RECOMMENDATIONS. NOTIFY ENGINEER IF MINIMUM COVER CANNOT BE ATTAINED.
10. ALL FACILITIES WITH DOWNSPOUTS/ROOF DRAINS SHALL BE CONNECTED TO THE STORM DRAIN SYSTEM. SEE PLUMBING PLANS FOR DOWNSPOUT/ROOF DRAIN LOCATIONS AND SIZES. ALL ROOF DRAINS TO HAVE MINIMUM 1% SLOPE.
11. THE CONTRACTOR SHALL ADJUST TO GRADE ALL EXISTING UTILITIES AS NEEDED PER LOCAL GOVERNING AGENCY'S STANDARDS AND SPECIFICATIONS.
12. NOTIFY ENGINEER OF ANY DISCREPANCIES IN DESIGN OR STAKING BEFORE PLACING CONCRETE, ASPHALT, OR STORM DRAIN STRUCTURES OR PIPES.
13. THE CONTRACTOR IS TO PROTECT AND PRESERVE ALL EXISTING IMPROVEMENTS, UTILITIES, AND SIGNS, ETC. UNLESS OTHERWISE NOTED ON THESE PLANS.
14. CONTRACTOR TO MATCH SLOPE OF BASIN TO THE STORM DRAIN FLARED END SECTIONS TO MINIMIZE STORM DRAIN INFRASTRUCTURE VISIBILITY.

HORIZONTAL GRAPHIC SCALE

50 0 25 50 100

(IN FEET)
HORZ: 1 inch = 50 ft.

APPROVED FOR CONSTRUCTION

BY: _____ DATE: _____
CITY ENGINEER

FOR CONSTRUCTION

blu line designs
planning | landscape architecture | design
8719 S. Sandy Parkway
Sandy, UT 84070
p 801.913.7994

ENSIGN
THE STANDARD IN ENGINEERING
LAYTON
919 North 400 West
Layton, UT 84041
Phone: 801.547.1100
WWW.ENSIGNENG.COM
ENSIGN PROJECT # 12281

IVY ACRES PARK

1397 WEST COOK LANE (500 NORTH)
FARMINGTON, UT

REVISIONS

NO.	APPROVED	DESCRIPTION

PROFESSIONAL ENGINEER
REGISTERED
No. 9049039
5-1-24
CAMERON HESS PRESTON
STATE OF UTAH

Designed By:	I.BUCKLEY
Drawn By:	M.ELMER
Date:	5/1/24
Checked By:	C.PRESTON
Project No:	22-246

Drawing Title

OVERALL GRADING AND DRAINAGE PLAN

Drawing number

C200

811 Know what's below. Call before you dig.

CALL BLUESTAKES @ 811 AT LEAST 48 HOURS PRIOR TO THE COMMENCEMENT OF ANY CONSTRUCTION.

BENCHMARK

SOUTH QUARTER CORNER OF SECTION 14, TOWNSHIP 3 NORTH, RANGE 1 WEST SALT LAKE BASE AND MERIDIAN

ELEV = 4229.59'

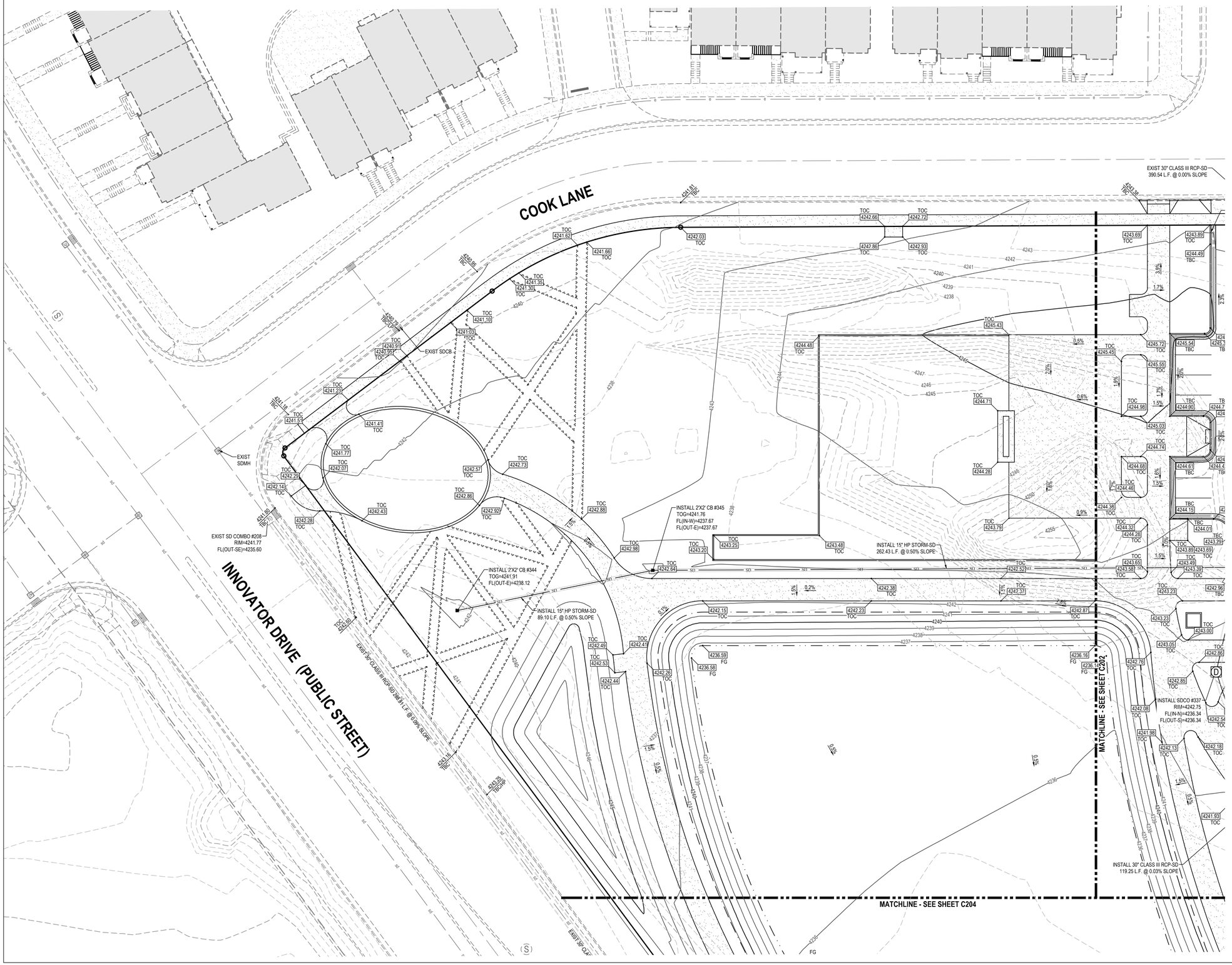

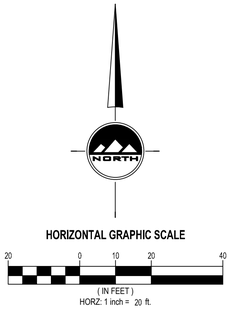

FOR CONSTRUCTION

APPROVED FOR CONSTRUCTION

BY: _____ DATE: _____

CITY ENGINEER

blu line designs
planning | landscape architecture | design
8719 S. Sandy Parkway
Sandy, UT 84070
p 801.913.7994

ENSIGN
THE STANDARD IN ENGINEERING
LAYTON
919 North 400 West
Layton, UT 84041
Phone: 801.547.1100
WWW.ENSIGNENG.COM
ENSIGN PROJECT # 12281

IVY ACRES PARK

1397 WEST COOK LANE (500 NORTH)
FARMINGTON, UT

REVISIONS

NO.	APPROVED	DESCRIPTION

PROFESSIONAL ENGINEER REGISTERED No. 5049039 5-1-24 STATE OF UTAH CAMERON HESS PRESTON

Designed By:	I.BUCKLEY
Drawn By:	M.ELMER
Date:	5/1/24
Checked By:	C.PRESTON
Project No:	22-246

Drawing Title

GRADING AND DRAINAGE PLAN

Drawing number

C201

811 Know what's below. Call before you dig.

CALL BLUESTAKES @ 811 AT LEAST 48 HOURS PRIOR TO THE COMMENCEMENT OF ANY CONSTRUCTION.

BENCHMARK

SOUTH QUARTER CORNER OF SECTION 14, TOWNSHIP 3 NORTH, RANGE 1 WEST SALT LAKE BASE AND MERIDIAN

ELEV = 4229.59'

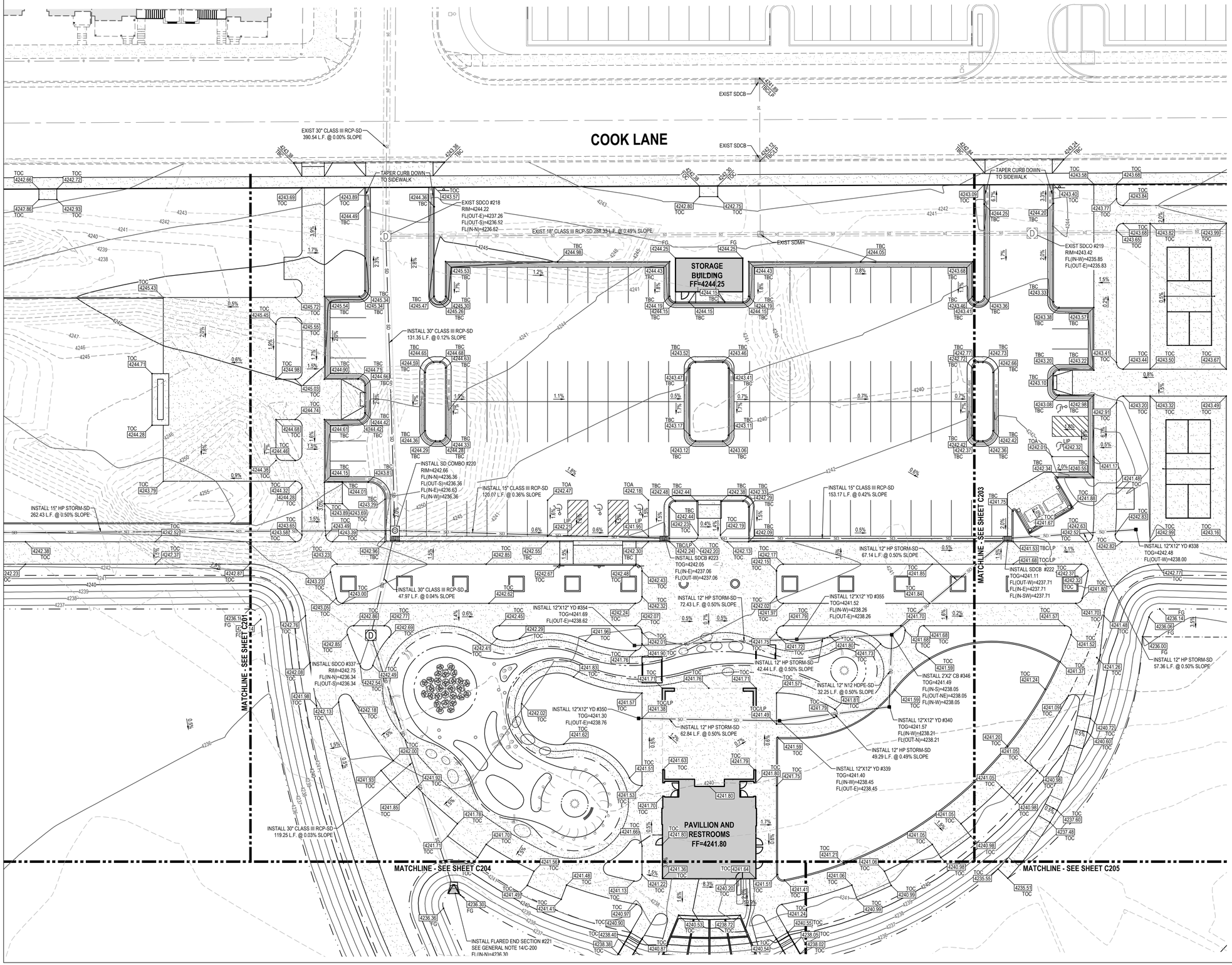

blu line designs
planning | landscape architecture | design
8719 S. Sandy Parkway
Sandy, UT 84070
p 801.913.7994

ENSIGN
THE STANDARD IN ENGINEERING
LAYTON
919 North 400 West
Layton, UT 84041
Phone: 801.547.1100
WWW.ENSIGNENG.COM

ENSIGN PROJECT # 12281

IVY ACRES PARK

1397 WEST COOK LANE (500 NORTH)
FARMINGTON, UT

REVISIONS

NO.	APPROVED	DESCRIPTION

PROFESSIONAL ENGINEER — No. 549039 — 5-1-24 — STATE OF UTAH — CAMERON NESS PRESTON

Designed By:	I.BUCKLEY
Drawn By:	M.ELMER
Date:	5/1/24
Checked By:	C.PRESTON
Project No:	22-246

Drawing Title

GRADING AND DRAINAGE PLAN

Drawing number

C202

NORTH

HORIZONTAL GRAPHIC SCALE

20 0 10 20 40

(IN FEET)
HORZ. 1 inch = 20 ft.

FOR CONSTRUCTION

APPROVED FOR CONSTRUCTION

BY: _____ DATE: _____
CITY ENGINEER

811 Know what's below. Call before you dig.

CALL BLUESTAKES @ 811 AT LEAST 48 HOURS PRIOR TO THE COMMENCEMENT OF ANY CONSTRUCTION.

BENCHMARK

SOUTH QUARTER CORNER OF SECTION 14, TOWNSHIP 3 NORTH, RANGE 1 WEST SALT LAKE BASE AND MERIDIAN

ELEV = 4229.59'

COOK LANE

MAKER WAY

PARCEL A
PARK LANE COMMONS
PHASE 3

TAPER CURB DOWN TO SIDEWALK

EXIST SDMH

EXIST SDCO #219
RIM=4243.42
FL(IN-W)=4235.85
FL(OUT-E)=4235.83

EXIST 18" CLASS III RCP-SD
285.99 L.F. @ 0.27% SLOPE

EXIST SDCO #205
RIM=4245.31
FL(OUT-S)=4235.06
FL(IN-W)=4235.06

INSTALL 15" CLASS III RCP-SD
153.17 L.F. @ 0.42% SLOPE

INSTALL 12" HP STORM-SD
67.14 L.F. @ 0.50% SLOPE

INSTALL SDCB #222
TOG=4241.11
FL(OUT-W)=4237.71
FL(IN-E)=4237.71
FL(IN-SW)=4237.71

INSTALL 12"X12" YD #355
TOG=4241.52
FL(IN-W)=4238.26
FL(OUT-E)=4238.26

INSTALL 12" HP STORM-SD
44 L.F. @ 0.50% SLOPE

INSTALL 12" N12 HDPE-SD
32.25 L.F. @ 0.50% SLOPE

INSTALL 2'X2' CB #346
TOG=4241.49
FL(IN-S)=4238.05
FL(OUT-NE)=4238.05
FL(IN-W)=4238.05

INSTALL 12"X12" YD #340
TOG=4241.57
FL(IN-W)=4238.21
FL(OUT-N)=4238.21

INSTALL 12" HP STORM-SD
49.29 L.F. @ 0.49% SLOPE

INSTALL 12"X12" YD #339
TOG=4241.40
FL(IN-W)=4238.45
FL(OUT-E)=4238.45

INSTALL 12"X12" YD #338
TOG=4242.48
FL(OUT-W)=4238.00

INSTALL 12" HP STORM-SD
57.36 L.F. @ 0.50% SLOPE

EXIST 30" CLASS III RCP-SD
320.53 L.F. @ 0.15% SLOPE

EXIST SD COMBO #206

GRADE BREAK

MATCHLINE - SEE SHEET C202

MATCHLINE - SEE SHEET C205

HORIZONTAL GRAPHIC SCALE

20 0 10 20 40

(IN FEET)
HORZ: 1 inch = 20 ft.

FOR CONSTRUCTION

APPROVED FOR CONSTRUCTION

BY: _____ DATE: _____
CITY ENGINEER

blu line designs
planning | landscape architecture | design
8719 S. Sandy Parkway
Sandy, UT 84070
p 801.913.7994

ENSIGN
THE STANDARD IN ENGINEERING
LAYTON
919 North 400 West
Layton, UT 84041
Phone: 801.547.1100
WWW.ENSIGNENG.COM
ENSIGN PROJECT # 12281

IVY ACRES PARK

1397 WEST COOK LANE (500 NORTH)
FARMINGTON, UT

REVISIONS

NO.	APPROVED	DESCRIPTION

PROFESSIONAL ENGINEER
No. 9049039
5-1-24
STATE OF UTAH
CAMERON HESS PRESTON

Designed By:	I.BUCKLEY
Drawn By:	M.ELMER
Date:	5/1/24
Checked By:	C.PRESTON
Project No:	22-246

Drawing Title

GRADING AND DRAINAGE PLAN

Drawing number

C203

811 Know what's below. Call before you dig.

CALL BLUESTAKES @ 811 AT LEAST 48 HOURS PRIOR TO THE COMMENCEMENT OF ANY CONSTRUCTION.

BENCHMARK

SOUTH QUARTER CORNER OF SECTION 14, TOWNSHIP 3 NORTH, RANGE 1 WEST SALT LAKE BASE AND MERIDIAN

ELEV = 4229.59'

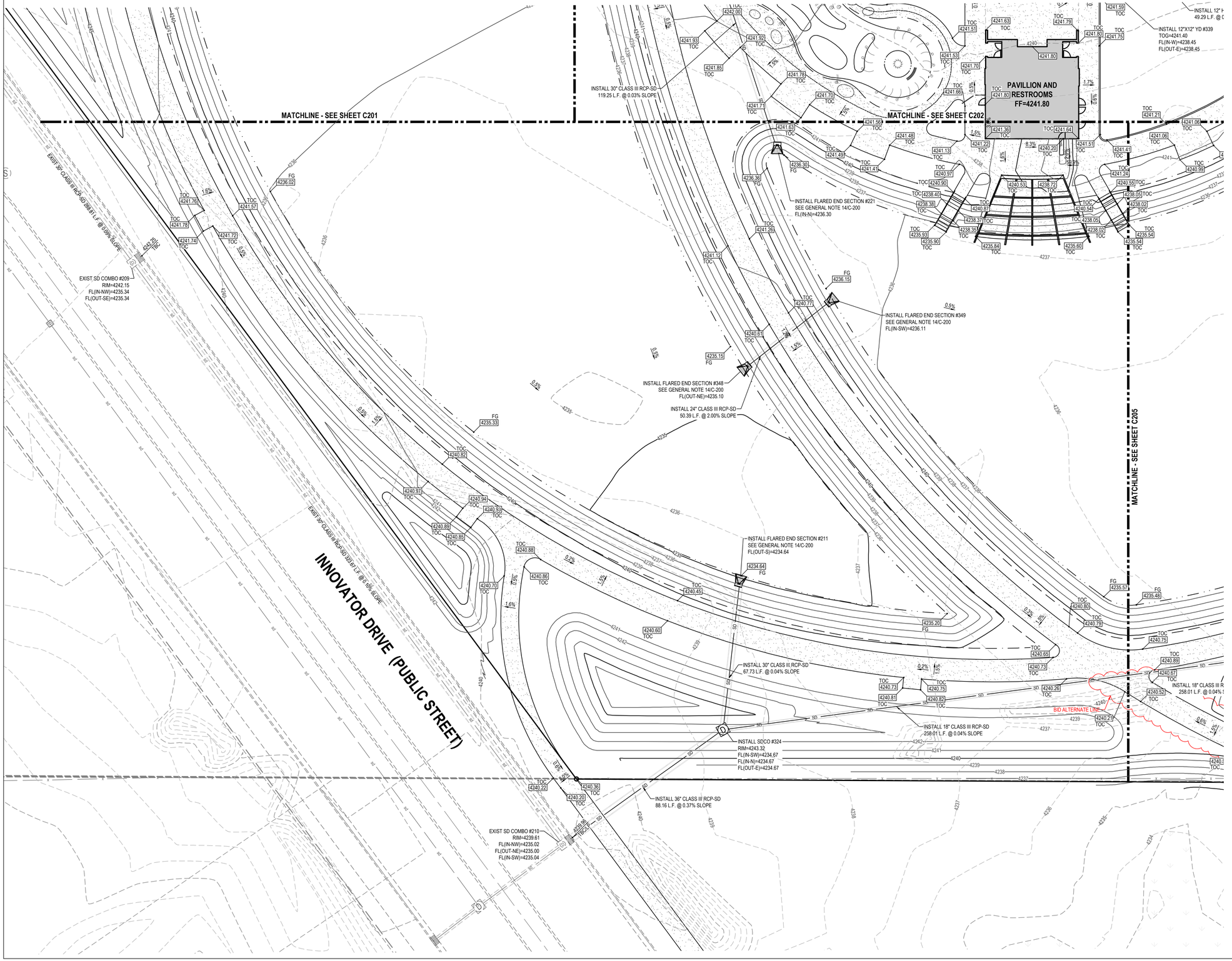

blu line designs
planning | landscape architecture | design
8719 S. Sandy Parkway
Sandy, UT 84070
p 801.913.7994

ENSIGN
THE STANDARD IN ENGINEERING
LAYTON
919 North 400 West
Layton, UT 84041
Phone: 801.547.1100
WWW.ENSIGNENG.COM
ENSIGN PROJECT # 12281

IVY ACRES PARK

1397 WEST COOK LANE (500 NORTH)
FARMINGTON, UT

REVISIONS

NO.	APPROVAL	DESCRIPTION

PROFESSIONAL ENGINEER — STATE OF UTAH — CAMERON HESS PRESTON — No. 10049039 — 5-1-24

Designed By:	I.BUCKLEY
Drawn By:	M.ELMER
Date:	5/1/24
Checked By:	C.PRESTON
Project No:	22-246

Drawing Title

GRADING AND DRAINAGE PLAN

Drawing number

C204

NORTH

HORIZONTAL GRAPHIC SCALE

20 0 10 20 40

(IN FEET)

HORZ: 1 inch = 20 ft.

FOR CONSTRUCTION

APPROVED FOR CONSTRUCTION

BY: _____ DATE: _____

CITY ENGINEER

811 Know what's below. Call before you dig.

CALL BLUESTAKES @ 811 AT LEAST 48 HOURS PRIOR TO THE COMMENCEMENT OF ANY CONSTRUCTION.

BENCHMARK

SOUTH QUARTER CORNER OF SECTION 14, TOWNSHIP 3 NORTH, RANGE 1 WEST SALT LAKE BASE AND MERIDIAN

ELEV = 4229.59'

MATCHLINE - SEE SHEET C202

MATCHLINE - SEE SHEET C203

MATCHLINE - SEE SHEET C204

MAKER WAY

PARCEL A
PARK LANE COMMONS
PHASE 3

EXIST SD COMBO #206
RIM=4240.60
FL(OUT-SW)=4234.66

EXIST SD COMBO #202
RIM=4240.59
FL(OUT-SW)=4234.57
FL(IN-N)=4234.58

EXIST 36" CLASS III RCP-SD
249.48 L.F. @ 0.06% SLOPE

EXIST 36" CLASS III RCP-SD
213.84 L.F. @ 0.03% SLOPE

INSTALL FLARED END SECTION #214
SEE GENERAL NOTE 14/C-200
FL(OUT-SE)=4234.52

INSTALL 30" CLASS III RCP-SD
55.00 L.F. @ 0.04% SLOPE

CONNECT TO EXIST
BASIN CONTROL
STRUCTURE #215
FL(IN-NW)=4234.50
FL(IN-W)=4234.50

EXIST BASIN CONTROL
STRUCTURE
FL(IN-NE)=4234.50
FL(IN-NE)=4234.50

EXIST BASIN CONTROL STRUCTURE
FL(OUT-S)=4234.50

EXIST 36" CLASS III RCP-SD
58.46 L.F. @ 0.09% SLOPE

EXIST FLARED END SECTION #217
FL(IN-N)=4234.45

EXIST BASIN CONTROL
STRUCTURE TO BE MODIFIED
SEE DETAIL 5/C401

INSTALL 18" CLASS III RCP-SD
161.08 L.F. @ 0.04% SLOPE

INSTALL SDCO #325
RIM=4238.19
FL(IN-W)=4234.57
FL(OUT-E)=4234.57

INSTALL 18" CLASS III RCP-SD
258.01 L.F. @ 0.04% SLOPE

BID ALTERNATE LINE

FL(OUT-E)=4238.45

HORIZONTAL GRAPHIC SCALE

20 0 10 20 40

(IN FEET)
HORZ: 1 inch = 20 ft.

FOR CONSTRUCTION

APPROVED FOR CONSTRUCTION

BY: _____ DATE: _____
CITY ENGINEER

blu line designs
planning | landscape architecture | design
8719 S. Sandy Parkway
Sandy, UT 84070
p 801.913.7994

ENSIGN
THE STANDARD IN ENGINEERING
LAYTON
919 North 400 West
Layton, UT 84041
Phone: 801.547.1100
WWW.ENSIGNENG.COM
ENSIGN PROJECT # 12281

IVY ACRES PARK

1397 WEST COOK LANE (500 NORTH)
FARMINGTON, UT

REVISIONS

NO.	APPROVAL	DESCRIPTION

PROFESSIONAL ENGINEER
No. 9149039
5-1-24
STATE OF UTAH
CAMERON HESS PRESTON

Designed By:	I.BUCKLEY
Drawn By:	M.ELMER
Date:	5/1/24
Checked By:	C.PRESTON
Project No:	22-246

Drawing Title

GRADING AND DRAINAGE PLAN

Drawing number

C205

811 Know what's below. Call before you dig.

CALL BLUESTAKES @ 811 AT LEAST 48 HOURS PRIOR TO THE COMMENCEMENT OF ANY CONSTRUCTION.

BENCHMARK

SOUTH QUARTER CORNER OF SECTION 14, TOWNSHIP 3 NORTH, RANGE 1 WEST SALT LAKE BASE AND MERIDIAN

ELEV = 4229.59'

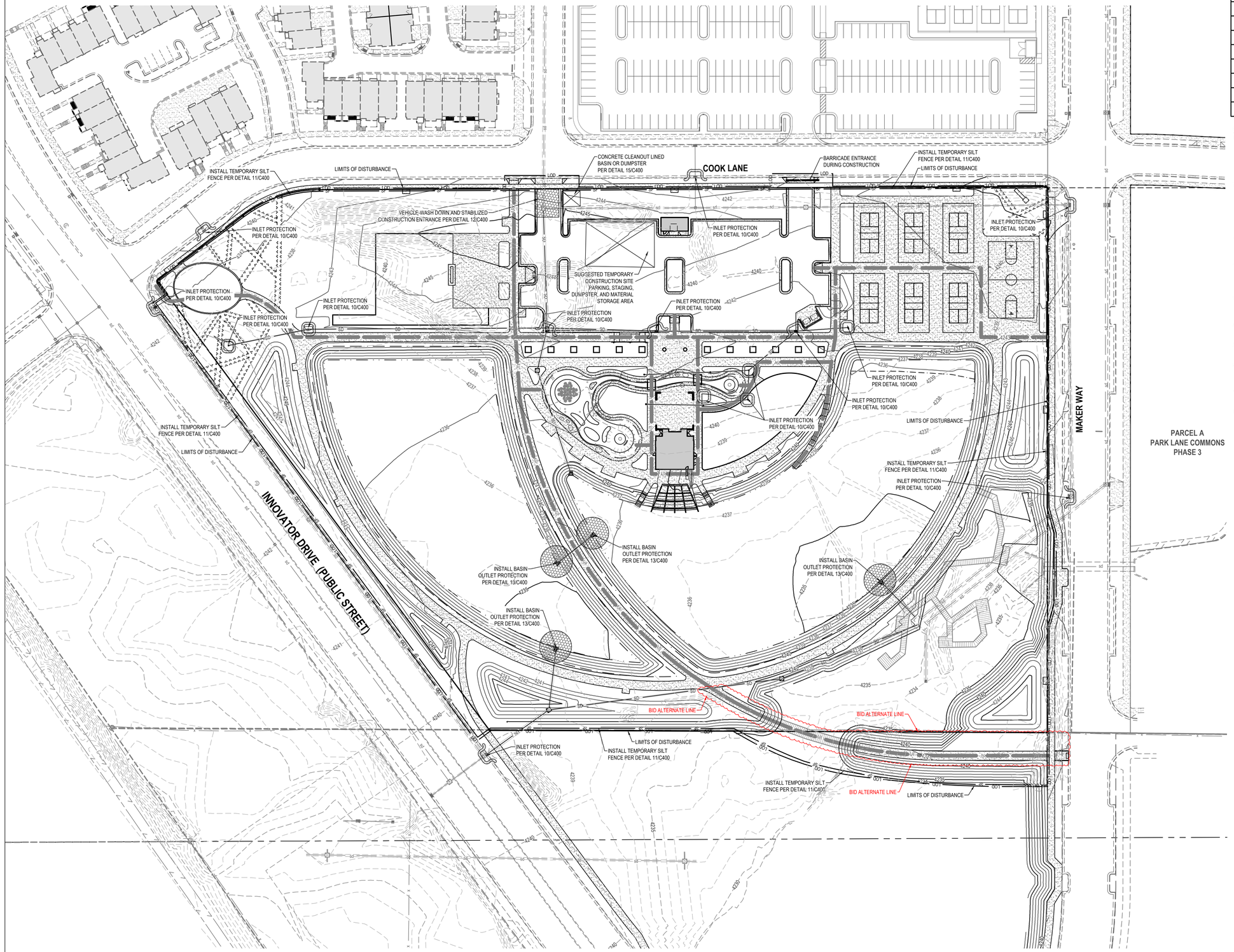

REVISION SCHEDULE

NUMBER	DATE	AUTHOR	COMPANY REPRESENTATIVE SIGNATURE
1			
2			
3			
4			
5			
6			
7			
8			
9			
10			
11			
12			

GENERAL NOTES

1. THIS PLAN IS DESIGNED AS A FIRST APPRAISAL OF NECESSARY MEANS TO PROTECT THE WATERS OF THE STATE FROM POTENTIAL POLLUTION. IT IS THE RESPONSIBILITY OF THE OWNER/OPERATOR TO ADD WARRANTED BEST MANAGEMENT PRACTICES (BMP'S) AS NECESSARY, MODIFY THOSE SHOWN AS APPROPRIATE, AND DELETE FROM THE PROJECT THOSE FOUND TO BE UNNECESSARY. FEDERAL AND STATE LAW ALLOWS THESE UPDATES TO BE MADE BY THE OWNER/OPERATOR ONSITE AND RECORDED BY THE OWNER/OPERATOR ON THE COPY OF THE SWPPP KEPT ONSITE.
2. DISTURBED LAND SHALL BE KEPT TO A MINIMUM. STABILIZATION MEASURES SHALL BE INITIATED AS SOON AS PRACTICABLE IN PORTIONS OF THE SITE WHERE CONSTRUCTION ACTIVITIES HAVE TEMPORARILY OR PERMANENTLY CEASED, BUT IN NO CASE MORE THAN 14 DAYS AFTER THE CONSTRUCTION ACTIVITY IN THAT PORTION OF THE SITE HAS TEMPORARILY OR PERMANENTLY CEASED. HOWEVER, WHERE CONSTRUCTION ACTIVITY ON A PORTION OF THE SITE IS TEMPORARILY CEASED, AND EARTH DISTURBING ACTIVITIES WILL BE RESUMED WITHIN 21 DAYS, TEMPORARY STABILIZATION MEASURES DO NOT HAVE TO BE INITIATED ON THAT PORTION OF THE SITE.
3. RESEED DISTURBED LAND WITH NATIVE GRASS MIXTURE WITHIN 14 CALENDAR DAYS OF ACHIEVEMENT OF FINISH GRADE TO STABILIZE SOILS IF LAND IS NOT TO BE RE-WORKED WITHIN 14 CALENDAR DAYS OF THE CESSATION OF CONSTRUCTION ACTIVITIES AT THAT LOCATION.
4. DETAILS SHOWN ARE TO BE EMPLOYED TO PROTECT RUNOFF AS APPROPRIATE DURING CONSTRUCTION. NOT ALL DETAILS ARE NECESSARY AT ALL PHASES OF THE PROJECT. IT SHALL BE THE RESPONSIBILITY OF THE OWNER/OPERATOR TO USE APPROPRIATE BEST MANAGEMENT PRACTICES AT THE APPROPRIATE PHASE OF CONSTRUCTION. SEE SWPPP FOR BMP IMPLEMENTATION SCHEDULE.
5. VARIOUS BEST MANAGEMENT PRACTICES HAVE BEEN SHOWN ON THE PLANS AT SUGGESTED LOCATIONS. THE CONTRACTOR MAY MOVE AND RECONFIGURE THESE BMP'S TO OTHER LOCATIONS IF PREFERRED, PROVIDED THE INTENT OF THE DESIGN IS PRESERVED.
6. NOT ALL POSSIBLE BMP'S HAVE BEEN SHOWN. THE CONTRACTOR IS RESPONSIBLE TO APPLY CORRECT MEASURES TO PREVENT THE POLLUTION OF STORM WATER PER PROJECT SWPPP.
7. A UPDES (UTAH POLLUTANT DISCHARGE ELIMINATION SYSTEM) PERMIT IS REQUIRED FOR ALL CONSTRUCTION ACTIVITIES 1 ACRE OR MORE.
8. ALL STORM WATER AND DIRT WILL BE KEPT ON SITE DURING CONSTRUCTION UNTIL FINAL LANDSCAPING IS DONE. THE CONTRACTOR WILL BE HELD RESPONSIBLE FOR KEEPING MUD/DIRT ON SITE DURING BAD WEATHER AND FOR CLEANING UP AFTER SUBCONTRACTORS.
9. GRAVEL BAGS (OR EQUIVALENT BMP) TO BE PLACED AND MAINTAINED AROUND ANY STORM DRAIN INLET ADJACENT TO OR IMMEDIATELY DOWNSTREAM FROM SITE DURING CONSTRUCTION.
10. A LINED CONCRETE WASHOUT AREA MUST BE PROVIDED AT THE SITE FOR ALL CONCRETE, PAINT, STUCCO OR MASONRY WORK. WASHOUT ON THE GROUND IS PROHIBITED.

NORTH

HORIZONTAL GRAPHIC SCALE

50 0 25 50 100

(IN FEET)
HORZ: 1 inch = 50 ft.

FOR CONSTRUCTION

APPROVED FOR CONSTRUCTION

BY: _____ DATE: _____
CITY ENGINEER

blu line designs
planning | landscape architecture | design
8719 S. Sandy Parkway
Sandy, UT 84070
p 801.913.7994

ENSIGN
THE STANDARD IN ENGINEERING
LAYTON
919 North 400 West
Layton, UT 84041
Phone: 801.547.1100
WWW.ENSIGNENG.COM
ENSIGN PROJECT # 12281

IVY ACRES PARK

1397 WEST COOK LANE (500 NORTH)
FARMINGTON, UT

REVISIONS

NO.	APPROVED	DESCRIPTION

PROFESSIONAL ENGINEER
REGISTERED
No. 9049039
5-1-24
STATE OF UTAH
CAMERON HESS PRESTON

Designed By:	I.BUCKLEY
Drawn By:	M.ELMER
Date:	5/1/24
Checked By:	C.PRESTON
Project No:	22-246

Drawing Title

EROSION CONTROL PLAN

Drawing number

C300

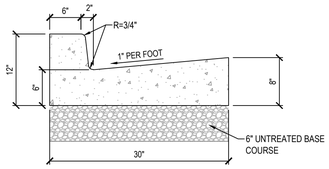

NOTE:

1. CONSTRUCT PER NOTES AND SPECIFICATIONS ASSOCIATED WITH APWA STANDARD PLAN NO. 205.

1 30" COLLECTION CURB AND GUTTER

SCALE: NONE

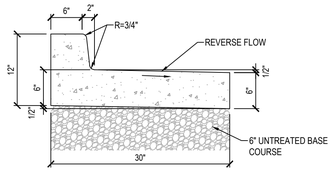

NOTE:

1. CONSTRUCT PER NOTES AND SPECIFICATIONS ASSOCIATED WITH APWA STANDARD PLAN NO. 205.

2 30" REVERSE PAN CURB AND GUTTER

SCALE: NONE

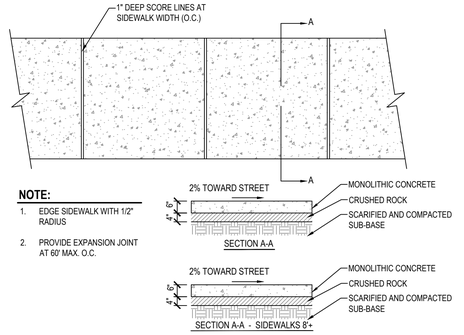

NOTE:

1. EDGE SIDEWALK WITH 1/2" RADIUS
2. PROVIDE EXPANSION JOINT AT 60' MAX. O.C.

3 CONCRETE SIDEWALK

SCALE: NONE

NOTE:
APPROXIMATELY 1 1/2" TO 2 FEET OF GRANULAR BORROW MAY BE NEEDED TO FACILITATE CONSTRUCTION.

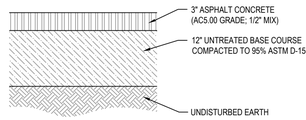

LIGHT DUTY PAVEMENT SECTION

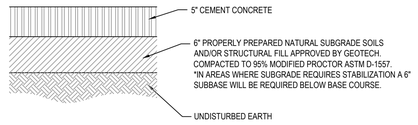

ALTERNATIVE LIGHT PAVEMENT

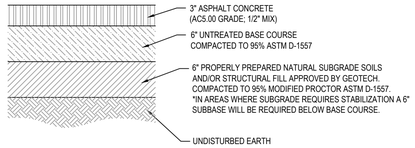

ALTERNATIVE LIGHT PAVEMENT

6 LIGHT DUTY PAVEMENT SECTIONS

SCALE: NONE

NOTE:
APPROXIMATELY 1 1/2" TO 2 FEET OF GRANULAR BORROW MAY BE NEEDED TO FACILITATE CONSTRUCTION.

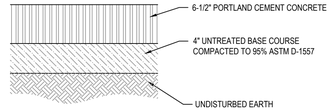

4 TRASH ENCLOSURE PAVEMENT SECTION

SCALE: NONE

NOTES:

1. SIGNS TO BE CENTERED AT FRONT OF PARKING SPACE.
2. HANDICAP PARKING LOGO, COLOR, HEIGHT, OF POLE, DIMENSIONS OF SIGN TO BE INSTALLED PER GOVERNMENTAL REQUIREMENTS.

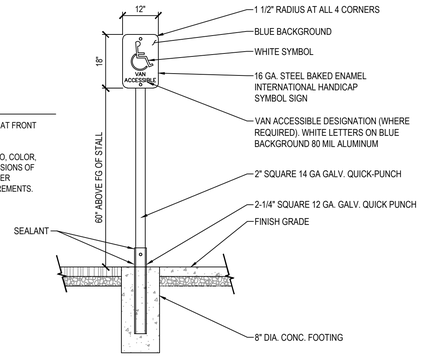

7 ACCESIBLE PARKING SIGN

SCALE: NONE

5 NOT USED

SCALE: NONE

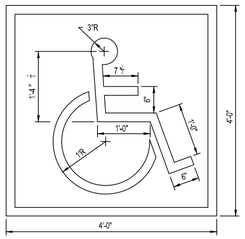

NOTES:

1. INTERNATIONAL PICTOGRAPH SYMBOL WHITE FED. STD. 17875.
2. 4"-BORDER-WHITE FED. STD. 17875.
3. BACKGROUND-BLUE FED. STD. 15180.

8 STALL PAVEMENT MARKING

SCALE: NONE

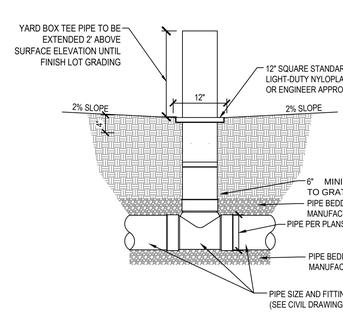

9 12" X 12" YARD DRAIN

SCALE: NONE

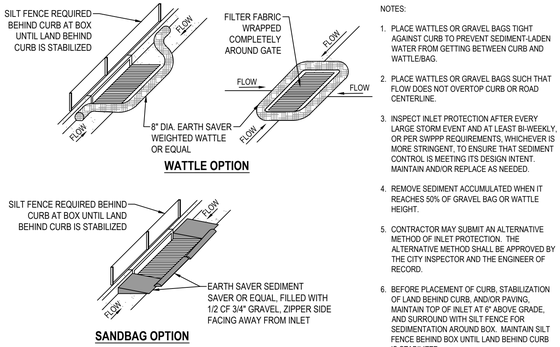

NOTES:

1. PLACE WATTLES OR GRAVEL BAGS TIGHT AGAINST CURB TO PREVENT SEDIMENT-LADEN WATER FROM GETTING BETWEEN CURB AND WATTLE/BAG.
2. PLACE WATTLES OR GRAVEL BAGS SUCH THAT FLOW DOES NOT OVERTOP CURB OR ROAD CENTERLINE.
3. INSPECT INLET PROTECTION AFTER EVERY LARGE STORM EVENT AND AT LEAST BI-WEEKLY, OR PER SWPPP REQUIREMENTS, WHICHEVER IS MORE STRINGENT, TO ENSURE THAT SEDIMENT CONTROL IS MEETING ITS DESIGN INTENT. MAINTAIN AND/OR REPLACE AS NEEDED.
4. REMOVE SEDIMENT ACCUMULATED WHEN IT REACHES 50% OF GRAVEL BAG OR WATTLE HEIGHT.
5. CONTRACTOR MAY SUBMIT AN ALTERNATIVE METHOD OF INLET PROTECTION. THE ALTERNATIVE METHOD SHALL BE APPROVED BY THE CITY INSPECTOR AND THE ENGINEER OF RECORD.
6. BEFORE PLACEMENT OF CURB, STABILIZATION OF LAND BEHIND CURB, AND/OR PAVING, MAINTAIN TOP OF INLET AT 6" ABOVE GRADE, AND SURROUND WITH SILT FENCE FOR SEDIMENTATION AROUND BOX. MAINTAIN SILT FENCE BEHIND BOX UNTIL LAND BEHIND CURB IS STABILIZED.

10 SAG INLET PROTECTION

SCALE: NONE

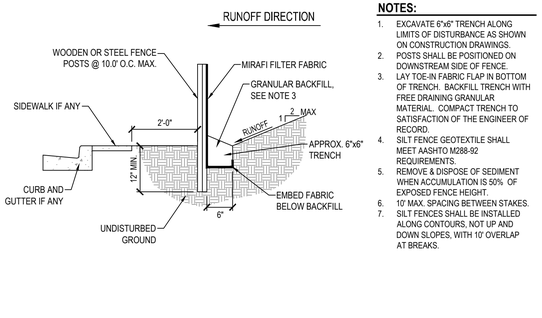

NOTES:

1. EXCAVATE 6"x6" TRENCH ALONG LIMITS OF DISTURBANCE AS SHOWN ON CONSTRUCTION DRAWINGS.
2. POSTS SHALL BE POSITIONED ON DOWNSTREAM SIDE OF FENCE.
3. LAY TOE-IN FABRIC FLAP IN BOTTOM OF TRENCH. BACKFILL TRENCH WITH FREE DRAINING GRANULAR MATERIAL. COMPACT TRENCH TO SATISFACTION OF THE ENGINEER OF RECORD.
4. SILT FENCE GEOTEXTILE SHALL MEET AASHTO M288-92 REQUIREMENTS.
5. REMOVE & DISPOSE OF SEDIMENT WHEN ACCUMULATION IS 50% OF EXPOSED FENCE HEIGHT.
6. 10' MAX. SPACING BETWEEN STAKES.
7. SILT FENCES SHALL BE INSTALLED ALONG CONTOURS, NOT UP AND DOWN SLOPES, WITH 10' OVERLAP AT BREAKS.

11 TEMPORARY SILT FENCE

SCALE: NONE

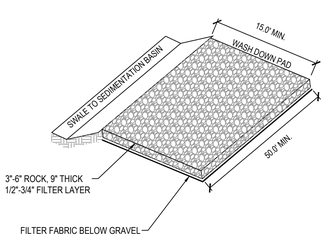

NOTE:

1. PLACE SIGN ADJACENT TO ENTRANCE " CONSTRUCTION TRAFFIC ONLY - ALL CONSTRUCTION TRAFFIC SHALL ENTER AND EXIT SITE AT THIS LOCATION"

12 STABILIZED CONSTRUCTION ENTRANCE

SCALE: NONE

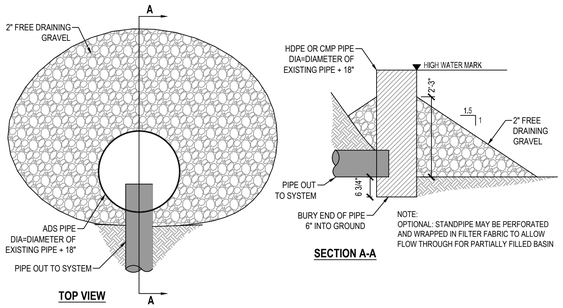

13 TEMPORARY BASIN OUTLET PROTECTION

SCALE: NONE

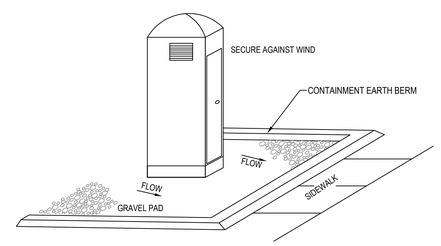

14 PORTABLE TOILET

SCALE: NONE

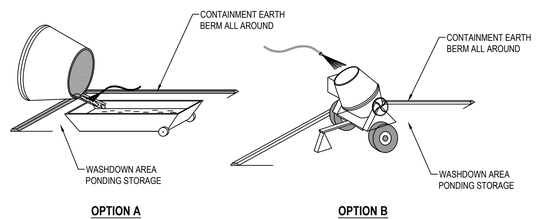

15 CONCRETE WASTE MANAGEMENT

SCALE: NONE

APPROVED FOR CONSTRUCTION

BY: _____ DATE: _____

CITY ENGINEER

FOR CONSTRUCTION

blu line designs
planning | landscape architecture | design
8719 S. Sandy Parkway
Sandy, UT 84070
p 801.913.7994

ENSIGN
THE STANDARD IN ENGINEERING
LAYTON
919 North 400 West
Layton, UT 84041
Phone: 801.547.1100
WWW.ENSIGNENG.COM
ENSIGN PROJECT # 12281

IVY ACRES PARK

1397 WEST COOK LANE (500 NORTH)
FARMINGTON, UT

REVISIONS

NO.	APPROVAL	DESCRIPTION

PROFESSIONAL ENGINEER — REG. NO. 10349039 — 3-30-24 — STATE OF UTAH — CAMERON HESS PRESTON

Designed By:	I.BUCKLEY
Drawn By:	M.ELMER
Date:	3/20/24
Checked By:	C.PRESTON
Project No:	22-246

Drawing Title

DETAILS

Drawing number

C400

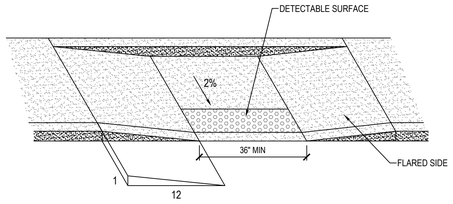

NOTE:
1. REFERENCE FARMINGTON CITY STANDARD DRAWING 235 SP & 235 SP FOR TYPICAL CONSTRUCTION SPECIFICATIONS

1 HANDICAP ACCESIBLE RAMP

SCALE: NONE

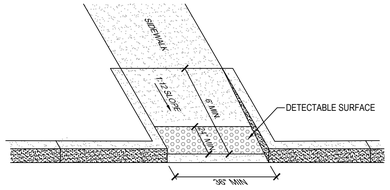

NOTE:
1. REFERENCE FARMINGTON CITY STANDARD DRAWING 235 SP & 235 SP FOR TYPICAL CONSTRUCTION SPECIFICATIONS

2 HANDICAP ACCESSIBLE RAMP

SCALE: NONE

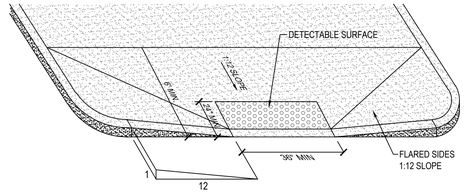

NOTE:
1. REFERENCE FARMINGTON CITY STANDARD DRAWING 235 SP & 235 SP FOR TYPICAL CONSTRUCTION SPECIFICATIONS

3 HANDICAP ACCESSIBLE RAMP

SCALE: NONE

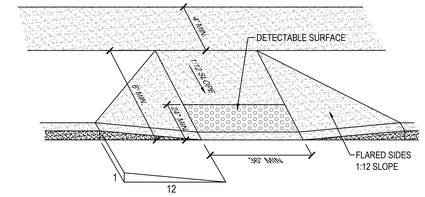

NOTE:
1. REFERENCE FARMINGTON CITY STANDARD DRAWING 235 SP & 235 SP FOR TYPICAL CONSTRUCTION SPECIFICATIONS

4 HANDICAP ACCESSIBLE RAMP

SCALE: NONE

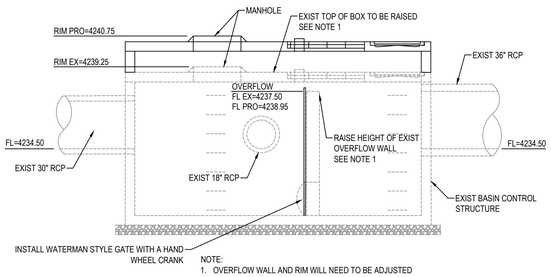

NOTE:
1. OVERFLOW WALL AND RIM WILL NEED TO BE ADJUSTED AND RAISED TO THE ELEVATION SHOWN

5 EXISTING BASIN CONTROL STRUCTURE MODIFICATION

SCALE: NONE

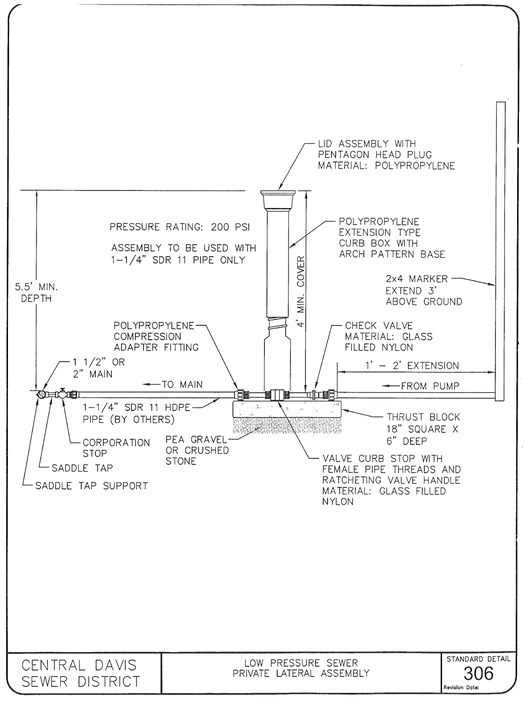

CENTRAL DAVIS SEWER DISTRICT	LOW PRESSURE SEWER PRIVATE LATERAL ASSEMBLY	STANDARD DETAIL 306 Revision Date:

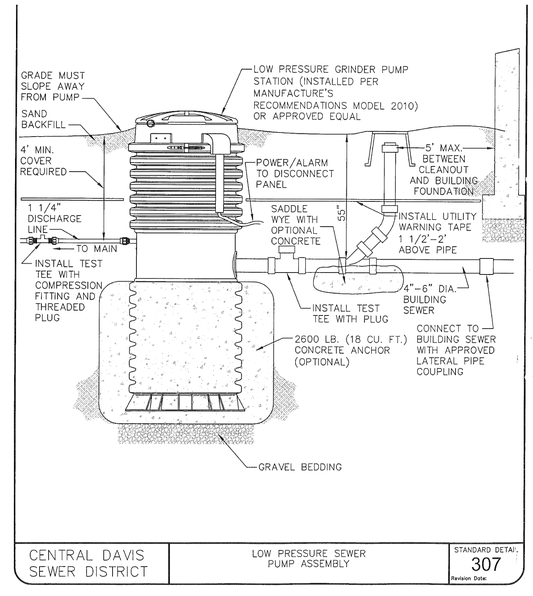

CENTRAL DAVIS SEWER DISTRICT	LOW PRESSURE SEWER PUMP ASSEMBLY	STANDARD DETAIL 307 Revision Date:

FLARE DRIVEWAY APPROACH

NOTES:

1. GENERAL
   - A. VARIANCE FROM SPECIFIED DIMENSIONS AND SLOPES MUST BE ACCEPTED BY THE CITY ENGINEER. SYSTEM CONFIGURATION MAY BE CHANGED AT CITY ENGINEER'S DISCRETION.
   - B. FIELD CHANGES TO SLOPE REQUIREMENTS:
     1) GRADES MAY HAVE A 6 PERCENT CHANGE IN SLOPE OVER AN 11 FEET WHEEL BASE RUN FOR BOTH CREST OR SAG VERTICAL CURVES.
     2) WHERE HEAVY TRUCK USE AND FIRE TRUCK ACCESS APPLIES, OR TO IMPROVE DESIGN SPEED, DESIGN GRADES SHOULD BE CUT IN HALF.
     3) SPECIFIC USES OR SITE CONDITIONS MAY REQUIRE PROFILE DESIGN SUBMITTAL FOR REVIEW AND ACCEPTANCE.
   - C. ADDITIONAL REQUIREMENTS ARE SPECIFIED IN APWA SECTION 32 16 13.

2. PRODUCTS
   - A. BASE COURSE: REFER TO PLAN 205 SP.
   - B. EXPANSION JOINT FILLER: 1/2-INCH THICK TYPE F1 FULL DEPTH, APWA SECTION 32 13 73.
   - C. CONCRETE: CLASS 4000, APWA SECTION 03 30 04. IF NECESSARY, PROVIDE CONCRETE THAT ACHIEVES DESIGN STRENGTH IN LESS THAN 7 DAYS. USE CAUTION; HOWEVER, AS CONCRETE CRAZING (SPIDER CRACKS) MAY DEVELOP IF AIR TEMPERATURE EXCEEDS 90 DEGREES F.
   - D. REINFORCEMENT: ALL CONCRETE SHALL HAVE FIBER.
   - E. ALL CONCRETE HAS FIBER REINFORCEMENT. REFER TO PLAN 231 SP.
   - F. CONCRETE CURING AGENT: CLEAR MEMBRANE FORMING COMPOUND WITH FUGITIVE DYE (TYPE ID CLASS A), APWA SECTION 03 39 00.

3. EXECUTION
   - A. BASE COURSE PLACEMENT: APWA SECTION 32 05 10. MAXIMUM LIFT THICKNESS BEFORE COMPACTION IS 8-INCHES WHEN USING RIDING EQUIPMENT OR 6-INCHES WHEN USING HAND HELD EQUIPMENT. COMPACTION IS 95 PERCENT OR GREATER RELATIVE TO A MODIFIED PROCTOR DENSITY, APWA SECTION 31 23 26.
   - B. REINFORCEMENT: NOT REQUIRED IF DRIVEWAY APRON IS CONSTRUCTED WITHOUT A COLD JOINT.
   - C. CONCRETE PLACEMENT: APWA SECTION 03 30 10.
     1) INSTALL EXPANSION JOINTS VERTICAL, FULL DEPTH, WITH TOP OF FILLER SET FLUSH WITH CONCRETE SURFACE.
     2) INSTALL CONTRACTION JOINTS VERTICAL, 1/8-INCH WIDE OR 1/4 SLAB THICKNESS IF THE SLAB IS GREATER THAN 8-INCHES THICK. MAXIMUM LENGTH TO WIDTH RATIO FOR NON-SQUARE PANELS IS 1.5 TO 1. MAXIMUM PANEL LENGTH (IN FEET) IS 1.5 TIMES THE SLAB THICKNESS (IN INCHES).
     3) PROVIDE 1/2-INCH RADIUS EDGES. APPLY A BROOM FINISH. APPLY A CURING AGENT.
   - D. PROTECTION AND REPAIR: PROTECT CONCRETE FROM DEICING CHEMICALS DURING CURE. REPAIR CONSTRUCTION THAT DOES NOT DRAIN. IF NECESSARY, FILL FLOW-LINE WITH WATER TO VERIFY.

PLAN NO. 221 SP

FLARE DRIVEWAY APPROACH

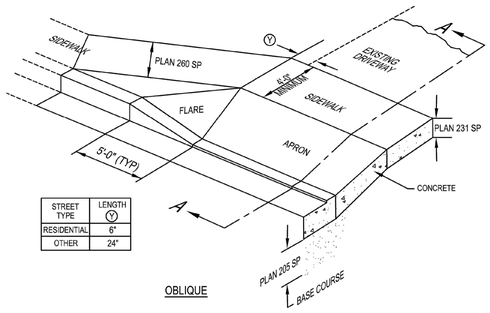

STREET TYPE	LENGTH (Y)
RESIDENTIAL	6"
OTHER	24"

OBLIQUE

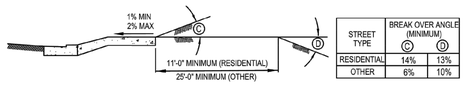

STREET TYPE	BREAK OVER ANGLE (MINIMUM) C	D
RESIDENTIAL	14%	13%
OTHER	6%	10%

SECTION A-A - APPROACH REQUIRING SERVICE TRUCK ACCESS

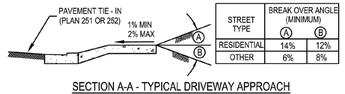

STREET TYPE	BREAK OVER ANGLE (MINIMUM) A	B
RESIDENTIAL	14%	12%
OTHER	6%	8%

SECTION A-A - TYPICAL DRIVEWAY APPROACH

PLAN NO. 221 SP

FOR CONSTRUCTION

APPROVED FOR CONSTRUCTION

BY: _____ DATE: _____
CITY ENGINEER

blu line designs
planning | landscape architecture | design
8719 S. Sandy Parkway
Sandy, UT 84070
p 801.913.7994

ENSIGN
THE STANDARD IN ENGINEERING
LAYTON
919 North 400 West
Layton, UT 84041
Phone: 801.547.1100
WWW.ENSIGNENG.COM
ENSIGN PROJECT # 12281

IVY ACRES PARK

1397 WEST COOK LANE (500 NORTH)
FARMINGTON, UT

REVISIONS

NO.	APPROVAL	DESCRIPTION

PROFESSIONAL ENGINEER — STATE OF UTAH — No. 10049039 — 3-20-24 — CAMERON NESS PRESTON

Designed By:	I.BUCKLEY
Drawn By:	M.ELMER
Date:	3/20/24
Checked By:	C.PRESTON
Project No:	22-246

Drawing Title

DETAILS

Drawing number

C401

DESIGN CRITERIA

1. GOVERNING BUILDING CODE: **2021 IBC**
   A. RISK CATEGORY = II

2. SEISMIC LOADING:
   A. S_S = 1.329g
   B. S_1 = 0.487g
   C. S_{DS} = 1.063g
   D. S_{D1} = 0.589g
   E. SEISMIC DESIGN CATEGORY = D
   F. SITE CLASS = D (DEFAULT)
   G. IMPORTANCE FACTOR, I_e = 1.0

3. WIND LOADING:
   A. BASIC WIND SPEED, V = 140 MPH - 3 SEC GUST
   B. ASD WIND SPEED, V_{asd} = 109 MPH - 3 SEC GUST
   C. EXPOSURE = C
   D. WIND DIRECTIONALITY FACTOR, K_d = 0.85
   E. WIND TOPOGRAPHIC FACTOR, K_{zt} = 1.0

GENERAL

1. ALL CONSTRUCTION SHALL BE IN CONFORMANCE WITH THE GOVERNING BUILDING CODE AND SUPPLEMENTS UNLESS HIGHER STANDARD IS REQUIRED BY LOCAL BUILDING OFFICIAL.

2. THE CONTRACTOR SHALL FURNISH AND INSTALL ALL ELEMENTS AS SHOWN ON THE CONTRACT DOCUMENTS UNLESS SPECIFICALLY NOTED OTHERWISE.

3. THE CONTRACTOR SHALL VERIFY ALL DIMENSIONS AND CONDITIONS AT THE SITE.

4. THE CONTRACTOR IS RESPONSIBLE FOR MEETING ALL APPLICABLE OSHA SAFETY REQUIREMENTS DURING CONSTRUCTION AND SHALL BE RESPONSIBLE FOR SAFETY AND PROTECTION WITHIN AND ADJACENT TO THE SITE.

5. AT ANY GIVEN TIME DURING AND AFTER CONSTRUCTION, THE CONTRACTOR AND/OR OWNER SHALL ENSURE THE LOADS ON THE STRUCTURE DO NOT EXCEED THE SPECIFIED DESIGN LOADS. CONSTRUCTION MATERIAL SHALL BE SPREAD OUT IF PLACED ON FRAMED FLOORS OR ROOF.

6. DO NOT SCALE DRAWINGS. IF DIMENSIONS ARE IN QUESTION, THE CONTRACTOR SHALL BE RESPONSIBLE FOR OBTAINING CLARIFICATION FROM THE ENGINEER BEFORE CONTINUING WITH CONSTRUCTION.

7. THE TYPICAL DETAILS SHALL BE USED WHEREVER APPLICABLE UNLESS OTHERWISE NOTED ON THE DRAWINGS. SPECIFIC NOTES AND DETAILS ON DRAWINGS SHALL TAKE PRECEDENCE OVER GENERAL NOTES AND TYPICAL DETAILS.

8. ALL OMISSIONS OR CONFLICTS BETWEEN THE VARIOUS ELEMENTS OF THE WORKING DRAWINGS AND/OR SPECIFICATIONS SHALL BE BROUGHT TO THE ATTENTION OF THE STRUCTURAL ENGINEER BEFORE PROCEEDING WITH ANY WORK INVOLVED. IN CASE OF CONFLICT, FOLLOW MOST STRINGENT REQUIREMENT AS DETERMINED BY STRUCTURAL ENGINEER WITHOUT COST TO OWNER.

9. THE CONTRACT STRUCTURAL DRAWINGS AND SPECIFICATIONS REPRESENT THE FINISHED STRUCTURE. THEY DO NOT INDICATE THE METHOD OF CONSTRUCTION. THE CONTRACTOR IS RESPONSIBLE FOR CONSTRUCTION MEANS, METHODS, TECHNIQUES, SHORING, SEQUENCES, AND PROCEDURES.

10. WHERE REFERENCE IS MADE TO VARIOUS TEST STANDARDS FOR MATERIALS, SUCH STANDARDS SHALL BE THE LATEST EDITION AND/OR ADDENDUM.

11. ESTABLISH AND VERIFY ALL OPENINGS AND INSERTS FOR ARCHITECTURAL, MECHANICAL, ELECTRICAL, AND PLUMBING WITH APPROPRIATE TRADES, DRAWINGS, AND SUBCONTRACTORS PRIOR TO CONSTRUCTION. DO NOT PENETRATE ANY STRUCTURAL ELEMENTS (BEAMS, COLUMNS, WALLS, SLABS, STEEL DECKS, ETC.) WITHOUT PRIOR WRITTEN APPROVAL OF STRUCTURAL ENGINEER THROUGH ARCHITECT.

PRE-CONSTRUCTION MEETINGS

1. A PRE-CONSTRUCTION MEETING IS RECOMMENDED PRIOR TO THE START OF CONSTRUCTION OF THE STRUCTURE. AT THE CONTRACTOR'S OPTION, THE PRE-CONSTRUCTION MEETING MAY TAKE PLACE PRIOR TO THE START OF SHOP DRAWING PRODUCTION.

2. IT IS THE RESPONSIBILITY OF THE CONTRACTOR TO SCHEDULE THE PRE-CONSTRUCTION MEETING WITH ALL APPLICABLE PARTIES INCLUDING (BUT NOT LIMITED TO) THE CONTRACTOR, SUB-CONTRACTORS, ARCHITECT, STRUCTURAL ENGINEER, AND SPECIAL INSPECTOR.

FOUNDATIONS

1. ALL FOOTINGS SHALL BEAR 24" MINIMUM ONTO ORIGINAL UNDISTURBED EARTH OR ENGINEERED FILL COMPACTED TO 95% OF MAXIMUM RELATED DENSITY BASED ON ASTM D1557. SUCH FILL SHALL BE PLACED IN LAYERS NOT EXCEEDING 8-INCHES IN DEPTH.

2. ALLOWABLE SOIL BEARING PRESSURE IS **1500** PSF (ASSUMED PER CODE MINIMUM). BOTTOM OF FOOTINGS SHALL BE A MINIMUM OF **30**-INCHES BELOW LOWEST ADJACENT FINAL GRADE FOR FROST PROTECTION.

3. **A 1.33** ALLOWABLE SOIL BEARING PRESSURE INCREASE IS ALLOWED FOR WIND & SEISMIC LOADING.

4. ALL WATER SHALL BE REMOVED FROM FOUNDATION EXCAVATION PRIOR TO PLACING OF CONCRETE. DO NOT PLACE CONCRETE UNDER WATER OR ON FROZEN GROUND.

5. ANY FILL TO BE PLACED UNDER THE BUILDING AND FOOTINGS SHALL BE A WELL GRADED GRANULAR MATERIAL WITHIN THE LIMITS OF THE FOLLOWING GRADATION:

SIEVE SIZE	PERCENT PASSING
4"	100
1"	60-90
NO. 4	30-60
NO. 40	10-30
NO. 200	5-12

6. WIDTH OF COMPACTED STRUCTURAL FILL SHALL EXTEND A MINIMUM DISTANCE EQUAL TO THE DEPTH OF FILL BEYOND THE EDGES OF THE FOOTINGS.

7. ALL FILL AND BACK FILL SHALL BE COMPACTED TO A MINIMUM OF 95% OF MAXIMUM RELATIVE DENSITY FOR BUILDING CONSTRUCTION AND 90% FOR GENERAL SITE WORK.

8. ANY UNUSUAL SOIL CONDITIONS (WATER, SOFT LAYERS, ROCK OUTCROPPINGS, ETC. ENCOUNTERED DURING EXCAVATION FOR FOOTINGS SHOULD BE IMMEDIATELY BROUGHT TO THE ATTENTION OF THE STRUCTURAL AND SOIL ENGINEERS PRIOR TO PROCEEDING.

STEEL REINFORCING

1. TYPICAL REINFORCING BAR STRENGTHS:
   A. REINFORCING (NON-WELDABLE) = ASTM A615, DEFORMED, Fy = 60 KSI (420 MPa)
   B. REINFORCING (WELDABLE) = ASTM A706, DEFORMED, Fy = 60 KSI (420 MPa)

2. TYPICAL CLEAR CONCRETE COVERAGES:
   A. CONCRETE CAST AGAINST AND PERMANENTLY EXPOSED TO EARTH = 3"
   B. FORMED CONCRETE EXPOSED TO EARTH OR WEATHER = 2" (#6 AND LARGER)
      = 2" (#5 AND SMALLER)
   C. ALL OTHERS PER LATEST EDITION OF ACI 318.

3. ALL BARS PER CRSI SPECIFICATIONS AND HANDBOOK. LATEST ACI CODE AND DETAILING MANUAL APPLY. SECURELY TIE ALL BARS IN LOCATION BEFORE PLACING CONCRETE OR MASONRY. REINFORCING BAR SPACINGS GIVEN ARE MAXIMUM ON CENTERS.

4. ALL REINFORCING TO BE WELDED SHALL BE WELDED IN ACCORDANCE WITH AWS D1.4. NO TACK WELDING OF REINFORCING BARS IS ALLOWED WITHOUT PRIOR REVIEW OF PROCEDURE BY STRUCTURAL ENGINEER.

CONCRETE

1. CONCRETE SHALL CONFORM TO ALL REQUIREMENTS OF ACI 318-19 "BUILDING CODE REQUIREMENTS FOR STRUCTURAL CONCRETE", EXCEPT AS MODIFIED BY THE SUPPLEMENTAL REQUIREMENTS BELOW:

NO WATER TO BE ADDED TO CONCRETE ON SITE EITHER BEFORE OR AFTER PLACEMENT

ELEMENT TYPE	MINIMUM COMP. STRENGTH, f'c (psi)	EXPOSURE CLASSES F	S	W	C	CEMENT TYPE	MAX. W/C RATIO	AIR CONTENT %	MAX. AGG. SIZE	MAX. FLY ASH %	APPLICABLE "SPECIFIC INSTRUCTION NOTES
FOOTINGS	3000	F0	S0	W0	C1	II OR IL	0.45	--	3/4"	25	
FOUNDATION WALLS, PEDESTALS, & GRADE BEAMS OCCURRING MORE THAN 6" ABOVE FINISHED GRADE	4500	F2	S0	W0	C1	II OR IL	0.45	6	3/4"	25	
PT COURTS	4500	F2	S0	W0	C1	II OR IL	0.40	6	3/4"	25	

2. CONCRETE SHALL ATTAIN THE LISTED MINIMUM COMPRESSIVE STRENGTH AT 28 DAYS.

3. AIR CONTENT TOLERANCE IS +/- 1-1/2% AT THE TIME OF FINAL PLACEMENT.

4. AIR ENTRAINMENT SHALL BE ADJUSTED FOR THE USE OF ADMIXTURES AND FLY ASH.

5. SUPERPLASTICIZER MAY BE ADDED TO INCREASE SLUMP AS REQUIRED FOR PLACEMENT.

6. CALCIUM CHLORIDE SHALL NOT BE ADDED TO THE CONCRETE MIX.

7. FOR EXPOSURE CLASS F3, THE MAXIMUM PERCENTAGE OF POZZOLAN IN CONCRETE MIX SHALL BE IN ACCORDANCE WITH SECTION 26.4.2.2 (B) OF ACI 318-19.

8. USE TYPE V CEMENT WHEN HIGH SULFATE RESISTANCE IS REQUIRED BY THE GEOTECHNICAL REPORT OR WHEN THE 'S' EXPOSURE CLASS IS DESIGNATED AS S2 OR S3. IF S3 IS REQUIRED, POZZOLAN OR SLAG CEMENT IN ACCORDANCE WITH ASTM C1012 IS ALSO REQUIRED.

9. MATERIAL DESIGNATIONS:
   A. CEMENT = ASTM C150 OR ASTM C595
   B. NORMAL WEIGHT AGGREGATES = ASTM C33
   C. LIGHTWEIGHT AGGREGATES = ASTM C330
   D. FLY ASH, CLASS F POZZOLAN = ASTM C618
   E. DEFORMED BAR ANCHORS (DBA) = ASTM A496
   F. HEADED STUD ANCHORS (HSA) = ASTM A108
   G. AIR ENTRAINMENT ADMIXTURES = ASTM C260
   H. WATER REDUCING ADMIXTURES = ASTM C494, TYPE 'A'
   I. RETARDING ADMIXTURES = ASTM C494, TYPE 'B'
   J. WATER REDUCING & RETARDING ADMIXTURES = ASTM C494, TYPE 'D'
   K. HIGH RANGE WATER REDUCING ADMIXTURES = ASTM C494, TYPE 'F'
   L. HIGH RANGE WATER REDUCING & RETARDING ADMIXTURES = ASTM C494, TYPE 'G'
   M. ADMIXTURES ARE TO COME FROM AN ISO9001 QUALITY CERTIFIED MANUFACTURER. ALL ADMIXTURES ARE TO COME FROM THE SAME MANUFACTURER TO ENSURE COMPATIBILITY.
   N. NO ALUMINUM CONDUIT OR PRODUCTS CONTAINING ALUMINUM OR ANY OTHER PRODUCTS THAT REACT ADVERSELY WITH THE CONCRETE SHALL BE EMBEDDED IN THE CONCRETE.

10. A STATEMENT OF MIX DESIGN FOR ALL CONCRETE SHALL BE SUBMITTED AND APPROVED BY THE ENGINEER PRIOR TO COMMENCING WORK.

11. PLACEMENT, CURING, AND PROTECTION OF CONCRETE SHALL CONFORM TO ACI 318-19. THE USE OF CHEMICALS OR ADDITIVES TO PREVENT FREEZING SHOULD NOT BE PERMITTED, REFER TO SPECIFICATIONS AND TO DIRECTIVES BY STRUCTURAL ENGINEER FOR ADDITIONAL COLD WEATHER REQUIREMENTS. ALL CONCRETE SHALL BE PROPERLY VIBRATED IN PLACE USING INTERNAL VIBRATING RODS (MECHANICAL OR ELECTRICAL).

12. ALL SLABS ON GRADE SHALL BE PLACED WITH CONTROL JOINTS OR SAW CUTS AT NO MORE THAN 30 TIMES THE SLAB THICKNESS ON CENTER (MAXIMUM) OR AS SHOWN/NOTED ON DRAWINGS. LENGTH TO WIDTH RATIO OF THE SLAB BETWEEN CONTROL JOINTS EACH WAY SHALL BE NO MORE THAN 1.25. COMPLETE CONTROL JOINTS WITHIN 12 HOURS OF CONCRETE PLACEMENT. TOOLED CONTROL JOINTS ARE TO BE AT MINIMUM 1/4 OF THE SLAB THICKNESS AND NO MORE THAN 1/3 OF THE SLAB THICKNESS. FOR SAW CUT CONTROL JOINTS, SEE THE TYPICAL SLAB ON GRADE JOINT DETAILS.

13. SLAB ON GRADE CONSTRUCTION JOINTS SHALL NOT EXCEED 125' - 0" O.C. IN ANY DIRECTION. CONSTRUCTION JOINTS MAY BE EITHER A DOWEL TYPE CONSTRUCTION JOINT OR A KEYWAY TYPE CONSTRUCTION JOINT. SEE THE SLAB JOINT TYPICAL DETAILS FOR MORE INFORMATION.

14. CONCRETE TESTS WILL BE MADE ON MAJOR POURS AND AT SUCH OTHER TIMES AS MAY BE REQUIRED BY THE ENGINEER. EACH TEST SHALL CONSIST OF (4) CYLINDERS OF WHICH ONE SHALL BE TESTED AT SEVEN DAYS, TWO TESTED AT TWENTY-EIGHT DAYS AND ONE RETAINED IN RESERVE FOR LATER TESTS, IF REQUIRED. IN GENERAL, ONE TEST SHALL BE MADE FOR EACH 150 CUBIC YARDS OF CONCRETE OR EVERY 5000 SQUARE FEET OF SURFACE AREA FOR SLABS OR WALLS ON EACH DAY'S POUR. SPECIMENS SHALL BE MADE AND TESTED IN ACCORDANCE WITH ASTM C31 & C39 STANDARDS. SLUMP AND AIR ENTRAINMENT TESTS SHALL ALSO BE MADE WITH EACH SET OF CYLINDERS TAKEN.

15. BEFORE CONCRETE IS POURED, CHECK WITH ALL TRADES TO INSURE PROPER PLACEMENT OF ALL OPENINGS, SLEEVES, CURBS, CONDUITS, BOLTS, INSERTS, ETC., RELATED TO THE WORK.

16. THE CONTRACTOR IS RESPONSIBLE FOR THE PLACEMENT, REMOVAL, AND DESIGN OF ALL FORMWORK AND SHORING.

17. SUSPENDED CONCRETE STRUCTURAL MEMBERS SHALL NOT BE STRIPPED OF FORMS UNTIL CONCRETE HAS REACHED ITS DESIGN STRENGTH.

18. FOR LAP SPLICE LENGTH, SEE CONCRETE REINFORCING LAP SPLICE LENGTH SCHEDULE.

19. SEE CIVIL DRAWINGS FOR SITE CONCRETE REQUIREMENTS.

SHOP DRAWINGS

1. SHOP DRAWINGS SHALL BE SUBMITTED TO THE GENERAL CONTRACTOR PRIOR TO FABRICATION OR ERECTION FOR THE FOLLOWING ITEMS:
   A. CONCRETE MIX DESIGNS
   B. REINFORCING STEEL
   C. MISCELLANEOUS METALS (INCLUDING BUT NOT LIMITED TO PREFABRICATED STEEL STAIRS, HANDRAILS, GUARDRAILS, LADDERS, ETC.)
   D. POST-TENSION ELONGATION

2. THE GENERAL CONTRACTOR SHALL SUBMIT ELECTRONIC COPIES OF ALL SHOP DRAWINGS TO THE STRUCTURAL ENGINEER FOR REVIEW PRIOR TO FABRICATION OR ERECTION. FIVE (5) WORKING DAYS (MINIMUM) SHALL BE ALLOWED FOR THE REVIEW OF THESE SHOP DRAWINGS BY THE STRUCTURAL ENGINEER.

3. THE GENERAL CONTRACTOR WILL REVIEW AND STAMP ALL SHOP DRAWINGS AND PRODUCT DATA FOR CONFORMANCE WITH THE CONSTRUCTION DOCUMENTS PRIOR TO SUBMISSION. ANY SHOP DRAWINGS OR PRODUCT DATA NOT REVIEWED AND STAMPED BY THE GENERAL CONTRACTOR WILL BE RETURNED WITHOUT REVIEW.

4. ANY SHOP DRAWING NOT CHECKED AND INITIALED BY THE SUPPLIER/DETAILER PRIOR TO SUBMITTING FOR ARCHITECTURAL AND ENGINEERING REVIEW, WILL BE RETURNED WITHOUT REVIEW.

5. THE CONSTRUCTION DOCUMENTS MAY NOT BE REPRODUCED AND USED TO CREATE SHOP DRAWINGS WITHOUT THE PERMISSION FROM THE ARCHITECT OR ENGINEER.

STRUCTURAL ABBREVIATIONS

AB.	ANCHOR BOLT(S)	IN.	INCH
ABV.	ABOVE	INSUL.	INSULATION
ADD.	ADDITION (AL)	INT.	INTERIOR
@	AT	I.F.	INSIDE FACE
ALT.	ALTERNATE		
APPROX.	APPROXIMATE	JT.	JOINT
ARCH.	ARCHITECT (URAL)	JST.	JOIST
BM.	BEAM	KLF	KIPS PER LINEAL FOOT
BLK'G.	BLOCKING	KSF	KIPS PER SQUARE FOOT
BLW.	BELOW	KSI	KIPS PER SQUARE INCH
BPL.	BASE PLATE	K	KIPS
BRG.	BEARING		
BTWN.	BETWEEN	LF.	LINEAL FOOT
BLDG.	BUILDING	LBS	POUNDS
BOT.	BOTTOM	LLH	LONG LEG HORIZONTAL
		LLV	LONG LEG VERTICAL
C.J.	CONSTRUCTION JOINT OR CONTROL JOINT	MAS.	MASONRY
CJP.	COMPLETE JOINT PENETRATION	MAX.	MAXIMUM
CMU	CONCRETE MASONRY UNIT	MCJ.	MASONRY CONTROL JOINT
COL.	COLUMN	MECH.	MECHANICAL
CONC.	CONCRETE	MFR.	MANUFACTURER
CONST.	CONSTRUCTION	MIN.	MINIMUM
CONT.	CONTINUOUS	MISC.	MISCELLANEOUS
CTR.	CENTER		
		N.I.C.	NOT IN CONTRACT
DB.	DECK BEARING	N.T.S.	NOT TO SCALE
DBA	DEFORMED BAR ANCHORS		
DBL.	DOUBLE	OPN'G.	OPENING
DET.	DETAIL	OPP.	OPPOSITE
DF	DOUGLAS FIR-LARCH	O.C.	ON CENTER
DIA.	DIAMETER	O.F.	OUTSIDE FACE
DIM.	DIMENSION	OWSJ.	OPEN WEB STEEL JOIST
DWG.	DRAWING		
DWL.	DOWEL	PAF	POWDER ACTUATED FASTENER
		PCF	POUNDS PER CUBIC FOOT
EA.	EACH	PEMB	PRE-ENGINEERED METAL BUILDING
E.J.	EXPANSION JOINT (SEISMIC SEPARATION JOINT)	PL.	PLATE
		PNL	PANEL
ELEV.	ELEVATION	PSF	POUNDS PER SQUARE FOOT
ELEC.	ELECTRICAL	PSI	POUNDS PER SQUARE INCH
EQUIP.	EQUIPMENT	PT	POST-TENSIONED
EQ.	EQUAL		
EXIST.	EXISTING	REINF.	REINFORCING
EXP.	EXPANSION / EXPOSED	RBS	REDUCED BASE STUD
EXT.	EXTERIOR	R.D.	ROOF DRAIN
E.F.	EACH FACE	REQ'D.	REQUIRED
E.W.	EACH WAY		
		SHT.	SHEET
F.D.	FLOOR DRAIN	SHT'G.	SHEATHING
FDTN.	FOUNDATION	SI	SPECIAL INSPECTION
F.F.	FINISH FLOOR	S.O.G.	SLAB ON GRADE
FIN.	FINISH	STD.	STANDARD
FL.	FLOOR	STIFF.	STIFFENER
FT.	FOOT	STL.	STEEL
FTG.	FOOTING	SQ.	SQUARE
FV.	FIELD VERIFY	SIM.	SIMILAR
		STRC.	STRUCTURAL
GA.	GAUGE	STAG.	STAGGERED
GALV.	GALVANIZED		
GFRC	GLASS FIBER REINFORCED CONCRETE	T&B	TOP AND BOTTOM
GLB.	GLU-LAMINATED BEAM	TEMP.	TEMPORARY
GR.	GRADE	T.O.	TOP OF
GSN	GENERAL STRUCTURAL NOTES	TOC	TOP OF CONCRETE
		TOF	TOP OF FOOTING
HB.	HORIZONTAL BRIDGING	TOS	TOP OF SLAB
HT.	HEIGHT	TOW	TOP OF WALL
HORIZ.	HORIZONTAL	TYP.	TYPICAL
HSA	HEADED STUD ANCHORS		
		U.N.O.	UNLESS NOTED OTHERWISE
IBC	INTERNATIONAL BUILDING CODE	VERT.	VERTICAL
ICBO	INTERNATIONAL CONFERENCE OF BUILDING OFFICIALS	w/	WITH
		WWF	WELD WIRE FABRIC
		WWM	WELD WIRE MESH
		WT.	WEIGHT
		WP	WOOD POST

SYMBOLS & MARKS LEGEND

- CONTINUOUS CONCRETE FOOTING
- SPOT / MAT CONCRETE FOOTING
- FOOTING STEP
- STEP IN TOP OF CONCRETE
- BLOCK OUT AT COLUMN
- HAIRPIN TENSION BAR
- TIE ROD
- CONCRETE WALL
- CONCRETE WALL BLOCK OUT
- CONCRETE COLUMN IN WALL
- BEAM IN WALL BELOW
- MASONRY WALL
- MASONRY COLUMN IN WALL
- BEAM IN WALL BELOW
- WOOD SHEAR WALL
- WOOD POST IN WALL
- BEAM IN WALL BELOW
- WOOD WALL (NON-SHEAR WALL)
- COLD-FORMED STEEL WALL
- BEAM IN WALL BELOW
- WALL THAT STOPS AT BOTTOM OF FLOOR OR ROOF (FLOOR OR ROOF STRUCTURE BEARS ON WALL)
- BEAM IN WALL THAT STOPS AT BOTTOM OF FLOOR OR ROOF
- CONCRETE OR MASONRY BEAM (NOT WITHIN A WALL) AT OR BELOW FLOOR OR ROOF
- NON-STRUCTURAL WALL THAT STOPS BELOW BOTTOM OF FLOOR OR ROOF (AIR GAP OCCURS BETWEEN WALL AND FLOOR OR ROOF STRUCTURE)
- COLUMN THAT STOPS AT BOTTOM OF FLOOR OR ROOF
- COLUMN THAT EITHER STARTS AT OR CONTINUES THROUGH FLOOR OR ROOF STRUCTURE
- WOOD POST (SOLID OR BUILT-UP)
- HSS TUBE STEEL COLUMN
- WIDE FLANGE STEEL COLUMN
- PIPE/ROUND HSS STEEL COLUMN
- CONCRETE OR MASONRY COLUMN
- HSA QUANTITY ON BEAM
- PRE-CAMBER AT MID-SPAN OF BEAM
- SIZE (xx) C=xx" STEEL BEAM
- MOMENT CONNECTION (SFRS)
- MOMENT CONNECTION (GRAVITY)
- COLLECTOR CONNECTION IDENTIFICATION
- BEAM SPLICE
- BRACED FRAME ELEMENT
- KICKER BRACE
- MFB MOMENT FRAME BEAM
- MFC MOMENT FRAME COLUMN
- SFRS INDICATES MEMBER IS PART OF SEISMIC FORCE RESISTING SYSTEM

- OPENING
- XX CONCRETE SUSPENDED SLAB, SEE KEYED NOTES FOR REQUIREMENTS
- CONCRETE OVER STEEL DECK, SEE PLAN FOR ORIENTATION, AND GSN & SCHEDULE FOR REQUIREMENTS
- STEEL DECK, SEE PLAN FOR ORIENTATION, AND GSN & SCHEDULE FOR REQUIREMENTS
- HORIZONTAL BRIDGING
- CROSS BRIDGING
- XX WOOD SHEATHING (FLOOR OR ROOF), SEE PLAN FOR ORIENTATION & REQUIREMENTS
- STRAPPING
- DX SNOW DRIFT, SEE SCHEDULE
- XX'-XX" ELEVATION
- INDICATES SPAN DIRECTION OF CONCRETE ELEMENTS
- EXTENT OF CONDITION SPECIFIED
- CONTINUATION OF CONDITION SPECIFIED
- ## / S### DETAIL # / SHEET #
- X KEYED NOTE

- AB# ANCHOR BOLT
- AT-# ANCHOR TIE DOWN SYSTEM
- BRGPL-# STEEL BEARING PLATE
- CB-# CONCRETE BEAM
- CC-# CONCRETE COLUMN
- CFSB-# COLD-FORMED STEEL BEAM
- CP-# CONCRETE PEDESTAL
- CTW-# CONCRETE TILT WALL
- CW-# CONCRETE WALL
- FC# CONTINUOUS FOOTING
- FS# SPOT FOOTING
- FTAO-# FORCE TRANSFER AROUND OPENING
- GB-# GRADE BEAM
- H-# HOLDOWN
- HCMC-# HOLLOW CLAY MASONRY COLUMN
- HCML-# HOLLOW CLAY MASONRY LINTEL
- HCMW-# HOLLOW CLAY MASONRY WALL
- HP-# HAIRPIN TENSION BAR
- L-# STEEL LEDGER
- MC-# MASONRY COLUMN
- ML-# MASONRY LINTEL
- MW-# MASONRY WALL
- RW-# RETAINING WALL
- SC-# STEEL COLUMN
- SD-# STEEL DECK
- SW-# WOOD SHEAR WALL
- T-# FLOOR-TO-FLOOR TIE
- WB-# WOOD BEAM
- WL-# WOOD LEDGER
- WP-# WOOD POST
- WW-# WOOD WALL

SHEET INDEX

SS001	GENERAL STRUCTURAL NOTES
SS002	SPECIAL INSPECTIONS
SS003	STRUCTURAL SCHEDULES & TYPICAL DETAILS
SS101	OVERALL SITE PLAN
SS103	SIGN FOUNDATIONS
SS104	PICKLEBALL & BASKETBALL PLAN
SS501	PT DETAILS

BID SET

blu line designs
planning | landscape architecture | design
8719 S. Sandy Parkway
Sandy, UT 84070
p 801.913.7994

CLIENT

FARMINGTON CITY
CONTACT: SYLVIA CLARK
PH: 801.939.9295
EMAIL: SCLARK@FARMINGTON.UTAH.GOV

FARMINGTON

ENSIGN
THE STANDARD IN ENGINEERING
www.ensigneng.com
Ensign Project #: 12281A

IVY ACRES PARK

1397 WEST COOK LANE
FARMINGTON, UT

REVISIONS

NO.	APPROVED	DESCRIPTION

Stamp

PROFESSIONAL ENGINEER
03/14/2024
13079626
QUINN T. LYTHGOE
STATE OF UTAH

Designed By:	QL
Drawn By:	HS
Date:	03-06-2024
Checked By:	CS
Project No:	22-246

Drawing Title

GENERAL STRUCTURAL NOTES

Drawing number

SS001

SPECIAL INSPECTION

SPECIAL INSPECTIONS:

1. SPECIAL INSPECTIONS ARE REQUIRED AS DESCRIBED IN CHAPTER 17 OF THE 2021 IBC. THE OWNER OR OWNER'S AGENT, OTHER THAN THE CONTRACTOR, SHALL EMPLOY ONE OR MORE APPROVED AGENCIES TO PROVIDE SPECIAL INSPECTIONS AND TESTS DURING CONSTRUCTION ON THE TYPES OF WORK SPECIFIED IN SECTION 1705 AND IDENTIFY THE APPROVED AGENCIES TO THE BUILDING OFFICIAL. THESE SPECIAL INSPECTIONS AND TESTS ARE IN ADDITION TO THE INSPECTIONS BY THE BUILDING OFFICIAL THAT ARE IDENTIFIED IN SECTION 110.

2. THE SPECIAL INSPECTION REQUIREMENTS OF THIS SECTION OF THE GENERAL STRUCTURAL NOTES SERVE AS THE ENGINEER OF RECORD'S STATEMENT OF SPECIAL INSPECTIONS REQUIRED BY CHAPTER 17 OF THE 2021 IBC.

SPECIAL INSPECTOR QUALIFICATIONS & RESPONSIBILITIES:

1. PRIOR TO THE START OF CONSTRUCTION, THE APPROVED AGENCIES SHALL PROVIDE WRITTEN DOCUMENTATION TO THE BUILDING OFFICIAL DEMONSTRATING THE COMPETENCE AND RELEVANT EXPERIENCE OR TRAINING OF THE SPECIAL INSPECTORS WHO WILL PERFORM THE SPECIAL INSPECTIONS AND TESTS DURING CONSTRUCTION.

2. APPROVED AGENCIES SHALL KEEP RECORDS OF ALL SPECIAL INSPECTIONS AND TESTS. THE APPROVED AGENCY SHALL SUBMIT REPORTS OF SPECIAL INSPECTIONS AND TEST TO THE BUILDING OFFICIAL AND TO THE ARCHITECT / ENGINEER OF RECORD.
   A. REPORTS SHALL INDICATE THAT WORK INSPECTED OR TESTED WAS OR WAS NOT COMPLETED IN CONFORMANCE TO THE APPROVED CONSTRUCTION DOCUMENTS.
   B. ANY DISCREPANCIES SHALL BE BROUGHT TO THE IMMEDIATE ATTENTION OF THE CONTRACTOR FOR CORRECTION.
   C. ANY DISCREPANCIES THAT ARE NOT CORRECTED SHALL BE BROUGHT TO THE ATTENTION OF THE BUILDING OFFICIAL AND THE ARCHITECT/ENGINEER OF RECORD PRIOR TO COMPLETION OF THAT PHASE OF WORK.
   D. THE INSPECTOR SHALL KEEP A MARKED-UP SET OF DRAWINGS SHOWING THE EXTENT AND TIME OF ALL INSPECTIONS AND TESTING.
   E. A FINAL SIGNED REPORT DOCUMENTING ALL REQUIRED SPECIAL INSPECTIONS AND CORRECTION OF ANY DISCREPANCIES NOTED IN THE INSPECTIONS SHALL BE SUBMITTED TO THE BUILDING OFFICIAL AND ARCHITECT/ENGINEER OF RECORD AT A POINT IN TIME AGREED UPON PRIOR TO THE START OF WORK BY THE OWNER OR OWNER'S AGENT. THE REPORT SHALL INCLUDE THE MARKED-UP SET OF DRAWINGS OUTLINED ABOVE.

CONTRACTOR RESPONSIBILITIES:

1. EACH CONTRACTOR RESPONSIBLE FOR THE CONSTRUCTION OF A MAIN WIND/SEISMIC FORCE RESISTING SYSTEM, DESIGNATED WIND/SEISMIC SYSTEM, OR A WIND/SEISMIC FORCE RESISTING COMPONENT SHALL SUBMIT A WRITTEN STATEMENT OF RESPONSIBILITY TO THE BUILDING OFFICIAL AND THE OWNER PRIOR TO THE COMMENCEMENT OF WORK ON THAT SYSTEM OR COMPONENT. THIS STATEMENT SHALL CONTAIN ACKNOWLEDGEMENT OF AWARENESS OF THE SPECIAL INSPECTION REQUIREMENTS.

2. THE CONTRACTOR SHALL COORDINATE AND COOPERATE WITH ALL REQUIRED INSPECTIONS, TESTING AND STRUCTURAL OBSERVATIONS. THE CONTRACTOR SHALL NOT PROCEED WITH SUBSEQUENT WORK UNTIL REQUIRED INSPECTIONS, TESTING AND STRUCTURAL OBSERVATIONS HAVE BEEN COMPLETED.

3. ALL WORK REQUIRING SPECIAL INSPECTION SHALL REMAIN ACCESSIBLE AND EXPOSED UNTIL COMPLETION OF THE REQUIRED SPECIAL INSPECTIONS.

4. THE CONTRACTOR SHALL NOTIFY THE ENGINEER OF RECORD AT LEAST (2) DAYS PRIOR TO ANY REQUIRED STRUCTURAL OBSERVATIONS.

SPECIAL INSPECTION OF FABRICATED ITEMS:

1. ALL FABRICATION OF STRUCTURAL, LOAD-BEARING OR LATERAL LOAD-RESISTING MEMBERS OR ASSEMBLIES PERFORMED OFFSITE SHALL BE SPECIAL INSPECTED PER SECTION 1704.2.5.

2. WHERE THE FABRICATOR IS REGISTERED AND APPROVED IN ACCORDANCE WITH SECTION 1704.2.5.1, THEY SHALL SUBMIT A CERTIFICATE OF COMPLIANCE TO THE OWNER OR THE OWNER'S AGENT FOR SUBMITTAL TO THE BUILDING OFFICIAL AT THE COMPLETION OF FABRICATION STATING THE WORK WAS PERFORMED IN ACCORDANCE WITH THE APPROVED CONSTRUCTION DOCUMENTS.

SUBMITTALS TO THE BUILDING OFFICIAL:

1. IN ADDITION TO THE SUBMITTAL OF REPORTS OF SPECIAL INSPECTIONS AND TESTS IN ACCORDANCE WITH SECTION 1704.2.4, REPORTS AND CERTIFICATES SHALL BE SUBMITTED BY THE OWNER OR OWNER'S AGENT TO THE BUILDING OFFICIAL FOR EACH OF THE FOLLOWING:
   A. CERTIFICATES OF COMPLIANCE FOR APPROVED FABRICATORS.
   B. REPORTS OF PRE-CONSTRUCTION TESTS FOR SHOTCRETE.
   C. GEOFOAM MATERIAL SPECIFICATIONS / MATERIAL PROPERTIES.

STRUCTURAL OBSERVATIONS:

1. STRUCTURAL OBSERVATIONS ARE NOT REQUIRED FOR THIS PROJECT. HOWEVER, STRUCTURAL OBSERVATIONS MAY BE PERFORMED BY A REPRESENTATIVE FROM ENSIGN ENGINEERING AS DEEMED NECESSARY.

REQUIRED SPECIAL INSPECTION OR TESTING:

THE FOLLOWING MATERIALS, SYSTEMS AND COMPONENTS REQUIRE SPECIAL INSPECTION OR TESTING PER CHAPTER 17 OF THE 2021 IBC:

1. SPECIAL CASES (SECTION 1705.1.1)
   A. SPECIAL INSPECTION AND TESTING SHALL BE PROVIDED FOR POST INSTALLED ANCHORS PER THE ICC OR IAPMO REPORT.

2. CONCRETE CONSTRUCTION (SECTION 1705.3):
   A. SPECIAL INSPECTION AND TESTS FOR CONCRETE CONSTRUCTION SHALL BE IN ACCORDANCE WITH THE CONCRETE CONSTRUCTION SPECIAL INSPECTION TABLE AND SECTION 1705.3 OF THE 2021 IBC.
   B. SEE TABLE 1705.3 OF THE 2021 IBC FOR APPLICABLE REFERENCE STANDARDS.
   C. WELDING OF REINFORCING BARS: SPECIAL INSPECTION OF WELDING AND QUALIFICATIONS OF SPECIAL INSPECTORS FOR REINFORCING BARS SHALL BE IN ACCORDANCE WITH THE REQUIREMENTS OF AWS D1.4 FOR SPECIAL INSPECTION AND FOR SPECIAL INSPECTOR QUALIFICATIONS.
   D. IN THE ABSENCE OF SUFFICIENT DATA OR DOCUMENTATION PROVIDING EVIDENCE OF CONFORMANCE TO QUALITY STANDARDS FOR MATERIAL IN CHAPTERS 19 AND 20 OF ACI 318, THE BUILDING OFFICIAL SHALL REQUIRE TESTING OF MATERIALS IN ACCORDANCE WITH THE APPROPRIATE STANDARDS AND CRITERIA FOR THE MATERIAL IN CHAPTERS 19 AND 20 OF ACI 318.

3. SOILS (SECTION 1705.6):
   A. SPECIAL INSPECTIONS AND TESTS OF EXISTING SITE SOIL CONDITIONS, FILL PLACEMENT AND LOAD-BEARING REQUIREMENTS SHALL BE IN ACCORDANCE WITH THE SOILS SPECIAL INSPECTION TABLE AND THE FOLLOWING:
      a. THE APPROVED GEOTECHINICAL REPORT AND APPROVED CONSTRUCTION DOCUMENTS SHALL BE USED TO DETERMINE COMPLIANCE.
      b. DURING FILL PLACEMENT, THE SPECIAL INSPECTOR SHALL DETERMINE THAT PROPER MATERIALS AND PROCEDURES ARE USED IN ACCORDANCE WITH THE PROVISIONS OF THE APPROVED GEOTECHNICAL REPORT.
      c. WHERE A GEOTECHNICAL REPORT IS NOT PROVIDED, THE SPECIAL INSPECTOR SHALL VERIFY THAT THE IN-PLACE DRY DENSITY OF THE COMPACTED FILL IS NOT LESS THAN 90 PERCENT OF THE MAXIMUM DRY DENSITY AT OPTIMUM MOISTURE CONTENT DETERMINED IN ACCORDANCE WITH ASTM D 1557.

DEFINITIONS:

1. THE FOLLOWING DEFINITIONS APPLY TO ALL SPECIAL INSPECTION TABLES (WHERE APPLICABLE) UNLESS SPECIFICALLY NOTED OTHERWISE:
   A. CONTINUOUS – FULL-TIME OBSERVATION OF WORK REQUIRING SPECIAL INSPECTION BY AN APPROVED SPECIAL INSPECTOR.
   B. PERIODIC – AN APPROVED SPECIAL INSPECTOR MUST OBSERVE THE WORK REQUIRING SPECIAL INSPECTION PRIOR TO COMMENCEMENT OF WORK, INTERMITTENTLY DURING THE WORK, AND AT COMPLETION OF THE WORK.

SOIL SPECIAL INSPECTION PER SECTION 1705.6 OF IBC 2021

VERIFICATION AND INSPECTION	CONTINUOUS	PERIODIC
VERIFY MATERIALS BELOW SHALLOW FOUNDATIONS ARE ADEQUATE TO ACHIEVE DESIGN BEARING CAPACITY		X
VERIFY EXCAVATIONS ARE EXTENDED TO PROPER DEPTH AND HAVE REACHED PROPER MATERIAL		X
PERFORM CLASSIFICATION AND TESTING OF COMPACTED FILL MATERIALS		X
DURING FILL PLACEMENT, VERIFY PROPER MATERIALS AND PROCEDURES IN ACCORDANCE w/ THE PROVISIONS OF THE APPROVED GEOTECHNICAL REPORT. VERIFY DENSITIES AND LIFT THICKNESSES DURING PLACEMENT AND COMPACTION OF COMPACTED FILL.	X	
PRIOR TO PLACEMENT OF COMPACTED FILL, INSPECT SUBGRADE AND VERIFY SITE HAS BEEN PREPARED PROPERLY		X

CONCRETE CONSTRUCTION SPECIAL INSPECTION PER SECTION 1705.3 OF IBC 2021

VERIFICATION AND INSPECTION	CONTINUOUS	PERIODIC
REINFORCEMENT, INCLUDING PRE-STRESSING TENDONS AND VERIFYING PLACEMENT		X
REINFORCING BAR WELDING:		
VERIFICATION OF WELDABILITY OF REINFORCING BARS OTHER THAN ASTM A706		X
INSPECT SINGLE-PASS FILLET WELDS, MAXIMUM 5/16"		X
INSPECT ALL OTHER WELDS	X	
CAST-IN-PLACE ANCHORS		X
POST-INSTALLED ANCHORS IN HARDENED CONCRETE MEMBERS(NOTE 1)		
ADHESIVE ANCHORS INSTALLED IN HORIZONTALLY OR UPWARDLY INCLINED ORIENTATIONS TO RESIST SUSTAINED TENSION LOADS	X	
MECHANICAL ANCHORS AND ADHESIVE ANCHORS NOT DEFINED ABOVE		X
USE OF REQUIRED MIX DESIGN		X
PRIOR TO CONCRETE PLACEMENT, FABRICATE SPECIMENS FOR STRENGTH TEST, PERFORM SLUMP AND AIR CONTENT TESTS, AND DETERMINE CONCRETE TEMPERATURE	X	
CONCRETE AND SHOTCRETE PLACEMENT FOR PROPER APPLICATION TECHNIQUES	X	
MAINTENANCE OF SPECIFIED CURING TEMPERATURE AND TECHNIQUES		X
INSPECT PRE-STRESSED CONCRETE FOR:		
APPLICATION OF PRE-STRESSING FORCES	X	
GROUTING OF BONDED PRE-STRESSING TENDONS	X	
ERECTION OF PRECAST CONCRETE		X
FOR PRECAST CONCRETE DIAPHRAGM CONNECTIONS OR REINFORCMENT AT JOINTS CLASSIFIED AS MODERATE OR HIGH DEFORMABILITY ELEMENTS (MDE OR HDE) IN STRUCTURES ASSIGNED TO SEISMIC DESIGN CATEGORY C, D, E, OR F, INSPECT SUCH CONNECTIONS AND REINFORCEMENT IN THE FIELD FOR:		
INSTALLATION OF THE EMBEDDED PARTS	X	
COMPLETION OF THE CONTINUITY OF REINFORCEMENT ACROSS JOINTS	X	
COMPLETION OF CONNECTIONS IN THE FIELD	X	
INSPECT INSTALLATION TOLERANCES OF PRECAST CONCRETE DIAPHRAGM CONNECTIONS FOR COMPLIANCE WITH ACI 550.5		X
IN-SITU CONCRETE STRENGTH, PRIOR TO STRESSING OF TENDONS IN POST-TENSIONED CONCRETE AND PRIOR TO REMOVAL OF SHORES AND FORMS FROM BEAMS AND STRUCTURAL SLABS		X
FORMWORK FOR SHAPE, LOCATION, AND DIMENSIONS OF CONCRETE MEMBER BEING FORMED		X

NOTES:

1. SPECIFIC REQUIREMENTS FOR SPECIAL INSPECTION SHALL BE INCLUDED IN THE RESEARCH REPORT FOR THE ANCHOR ISSUED BY AN APPROVED SOURCE IN ACCORDANCE WITH SECTION 17.8.2 OF ACI 318, OR OTHER QUALIFICATION PROCEDURES. WHERE SPECIFIC REQUIREMENTS ARE NOT PROVIDED, SPECIAL INSPECTION REQUIREMENTS SHALL BE SPECIFIED BY THE REGISTERED DESIGN PROFESSIONAL AND SHALL BE APPROVED BY THE BUILDING OFFICIAL PRIOR TO COMMENCEMENT OF THE WORK.

blu line designs
planning | landscape architecture | design
8719 S. Sandy Parkway
Sandy, UT 84070
p 801.913.7994

CLIENT
FARMINGTON CITY
CONTACT: SYLVIA CLARK
PH: 801.939.9295
EMAIL:
SCLARK@FARMINGTON.UTAH.GOV

ENSIGN
THE STANDARD IN ENGINEERING
www.ensigneng.com
Ensign Project #: 12281A

IVY ACRES PARK

1397 WEST COOK LANE
FARMINGTON, UT

BID SET

REVISIONS

NO.	APPROVING	DESCRIPTION

Stamp

PROFESSIONAL ENGINEER
03/14/2024
13079626
QUINN T.
LYTHGOE
STATE OF UTAH

Designed By:	QL
Drawn By:	HS
Date:	03-06-2024
Checked By:	CS
Project No:	22-246

Drawing Title

SPECIAL INSPECTIONS

Drawing number

SS002

CONCRETE REINFORCING LAP SPLICE LENGTH SCHEDULE

BAR SIZE	BAR DIAMETER (IN.)	f'c = 3,000 PSI				f'c = 4,000 PSI				f'c = 5,000 PSI			
		TYPICAL SPLICE (IN)		TOP BAR SPLICE (IN)		TYPICAL SPLICE (IN)		TOP BAR SPLICE (IN)		TYPICAL SPLICE (IN)		TOP BAR SPLICE (IN)	
		CLASS A	CLASS B	CLASS A	CLASS B	CLASS A	CLASS B	CLASS A	CLASS B	CLASS A	CLASS B	CLASS A	CLASS B
3	0.375	17	22	22	29	15	20	20	25	13	17	17	22
4	0.500	22	29	29	38	19	25	25	33	17	23	23	30
5	0.625	28	36	36	47	24	31	31	40	22	29	29	36
6	0.750	33	43	43	56	29	38	38	48	26	34	34	44
7	0.875	48	63	63	82	42	55	55	70	38	49	49	64
8	1.000	55	72	72	94	48	62	62	81	43	56	56	73
9	1.128	62	81	81	105	54	70	70	91	48	63	63	82
10	1.270	70	91	91	118	61	79	79	103	54	71	71	92
11	1.410	78	101	101	131	67	87	87	113	60	78	78	101

NOTES:

1. ALL LAP SPLICE LENGTHS ARE CLASS B UNLESS NOTED OTHERWISE ON PLANS.
2. HORIZONTAL BARS ARE CLASSIFIED AS TOP BARS WHERE 12" OR MORE OF FRESH CONCRETE IS CAST BELOW THE LAP SPLICE.
3. FOR ALL EPOXY-COATED BARS, LAP SPLICE LENGTHS SHALL BE MULTIPLIED BY:
   - 1.5 WHEN CLEAR COVER IS LESS THAN 3 BAR DIAMETERS & CLEAR SPACING IS LESS THAN 6 BAR DIAMETERS, OR
   - 1.2 FOR ALL OTHER EPOXY-COATED BARS.
4. FOR ALL LIGHT-WEIGHT CONCRETE, LAP SPLICE LENGTHS SHALL BE MULTIPLIED BY 1.33.

CONCRETE WALL SCHEDULE

MARK	WALL THICKNESS	REINFORCING						COMMENTS
		VERTICAL			HORIZONTAL			
		SIZE	SPACING	LOCATION	SIZE	SPACING	LOCATION	
CW-8A	8"	#5	16" O.C.	CENTER	#5	16" O.C.	CENTER	TYPICAL U.N.O.

NOTES:

1. EXTEND VERTICAL BARS FROM THE FOOTING TO WITHIN 3" OF TOP OF WALL.
2. DOWELS MATCHING VERTICAL REINFORCING SIZE & SPACING SHALL EXTEND INTO FOOTING & TERMINATE WITH A 90-DEGREE STANDARD HOOK. ENSURE VERTICAL DOWEL HOOKS AROUND BOTTOM MAT OF FOOTING REINFORCING.
3. EXTEND VERTICAL LEG OF DOWEL MIN. LAP SPLICE LENGTH INTO WALL.
4. ALTERNATE DIRECTION OF STANDARD HOOK AT EVERY OTHER BAR.
5. INSTALL SCHEDULED HORIZONTAL REINFORCING WITHIN 4" OF TOP & BOTTOM OF WALL, U.N.O.
6. INSTALL CORNER REINFORCING SO AS TO LAP HORIZONTAL REINFORCING. SEE "TYPICAL CONCRETE WALL INTERSECTION REINFORCING" STRUCTURAL DETAIL.
7. INSTALL (2) REBAR ABOVE, (1) REBAR @ EACH SIDE, & (1) REBAR BELOW ALL OPENINGS. PLACE STEEL WITHIN 2" OF OPENINGS, VERTICAL BARS AROUND OPENINGS SHALL EXTEND FROM THE FOOTING TO WITHIN 3" OF TOP OF WALL & EXTEND HORIZONTAL BARS MIN. LAP SPLICE LENGTH BEYOND EDGE OF OPENINGS.
8. ALL CONCRETE WALL TYPES MAY NOT BE USED, SEE PLAN FOR REQUIREMENTS.
9. SEE GENERAL STRUCTURAL NOTES FOR ADDITIONAL REQUIREMENTS.

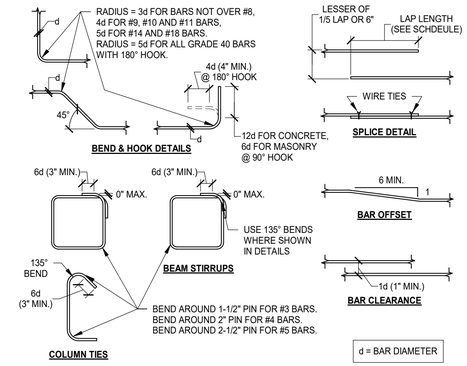

001 TYPICAL REINFORCING BAR DETAILS

SCALE: N.T.S.

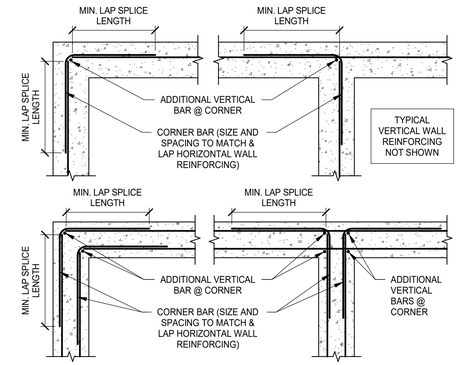

002 TYPICAL CONC. WALL INTERSECTION REINF.

SCALE: N.T.S.

BID SET

blu line designs
planning | landscape architecture | design
8719 S. Sandy Parkway
Sandy, UT 84070
p 801.913.7994

CLIENT

FARMINGTON CITY
CONTACT: SYLVIA CLARK
PH: 801.939.9295
EMAIL:
SCLARK@FARMINGTON.UTAH.GOV

FARMINGTON

ENSIGN
THE STANDARD IN ENGINEERING
www.ensigneng.com
Ensign Project #: 12281A

IVY ACRES PARK

1397 WEST COOK LANE
FARMINGTON, UT

REVISIONS

NO	APPROVAL	DESCRIPTION

Stamp

PROFESSIONAL ENGINEER
03/14/2024
13079626
QUINN T.
LYTHGOE
STATE OF UTAH

Designed By:	QL
Drawn By:	HS
Date:	03-06-2024
Checked By:	CS
Project No:	22-246

Drawing Title

STRUCTURAL SCHEDULES & TYPICAL DETAILS

Drawing number

SS003

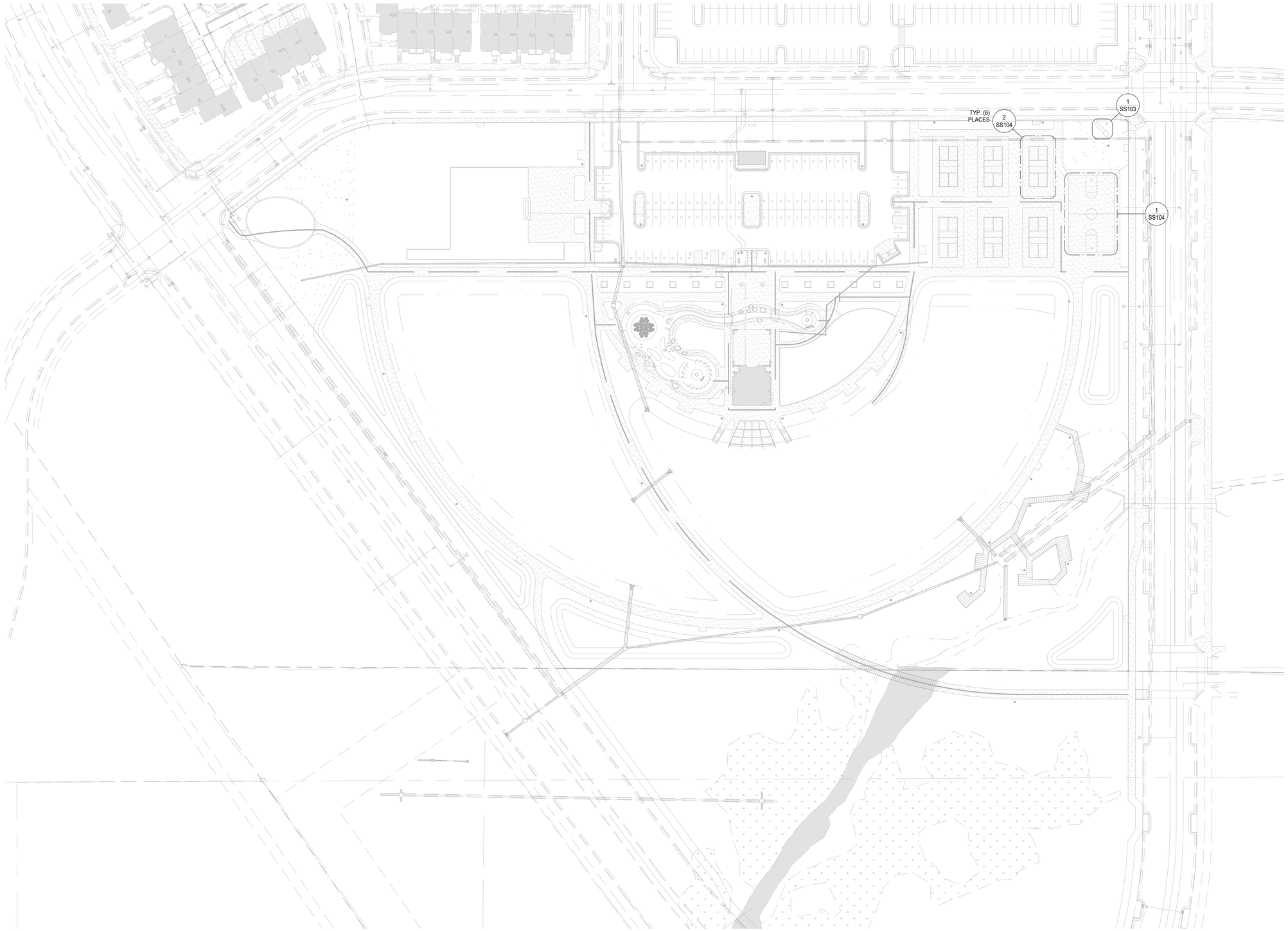

1 OVERALL SITE PLAN
SCALE: 1" = 50'-0"

BID SET

blu line designs
planning | landscape architecture | design

8719 S. Sandy Parkway
Sandy, UT 84070
p 801.913.7904

CLIENT

FARMINGTON CITY
CONTACT: SYLVIA CLARK
PH: 801.939.9295
EMAIL:
SCLARK@FARMINGTON.UTAH.GOV

FARMINGTON

ENSIGN
THE STANDARD IN ENGINEERING
www.ensigneng.com
Ensign Project #: 12281A

IVY ACRES PARK

1397 WEST COOK LANE
FARMINGTON, UT

REVISIONS

No.	APPROVAL	DESCRIPTION

Stamp

PROFESSIONAL ENGINEER
03/14/2024
13079626
QUINN T. LYTHGOE
STATE OF UTAH

Designed By:	QL
Drawn By:	HS
Date:	03-06-2024
Checked By:	CS
Project No:	22-246

Drawing Title

OVERALL SITE PLAN

Drawing number

SS101

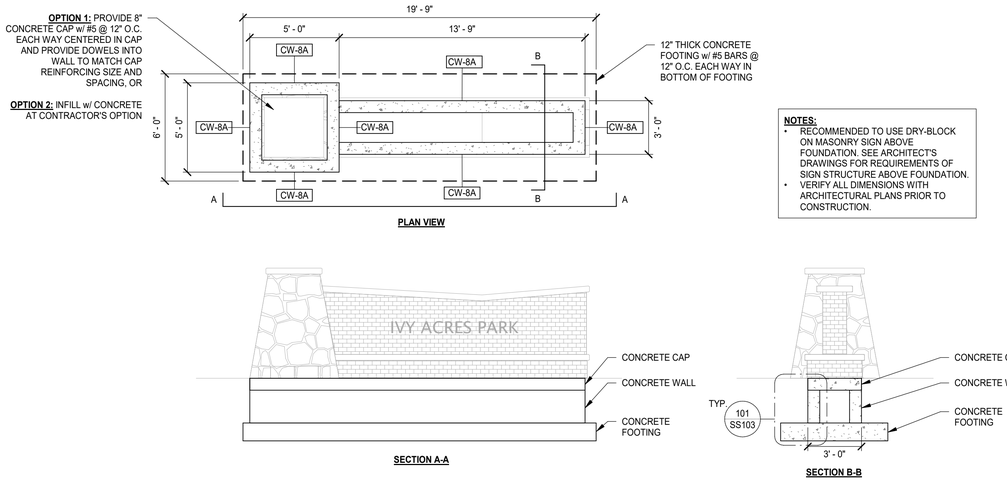

NOTES:

- RECOMMENDED TO USE DRY-BLOCK ON MASONRY SIGN ABOVE FOUNDATION. SEE ARCHITECT'S DRAWINGS FOR REQUIREMENTS OF SIGN STRUCTURE ABOVE FOUNDATION.
- VERIFY ALL DIMENSIONS WITH ARCHITECTURAL PLANS PRIOR TO CONSTRUCTION.

1 SIGN FOUNDATION PLAN

SCALE: 1/4" = 1'-0"

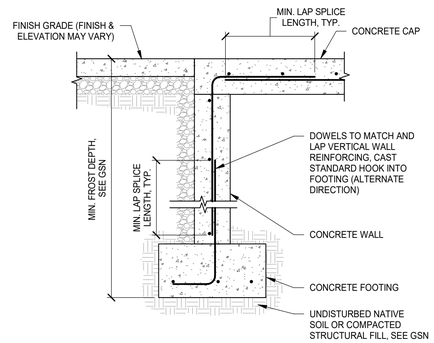

101 CONCRETE WALL @ EXTERIOR FOOTING

SCALE: N.T.S.

blu line designs
planning | landscape architecture | design
8719 S. Sandy Parkway
Sandy, UT 84070
p 801.913.7994

CLIENT

FARMINGTON CITY
CONTACT: SYLVIA CLARK
PH: 801.939.9295
EMAIL:
SCLARK@FARMINGTON.UTAH.GOV

ENSIGN
THE STANDARD IN ENGINEERING
www.ensigneng.com
Ensign Project #: 12281A

IVY ACRES PARK

1397 WEST COOK LANE
FARMINGTON, UT

REVISIONS

NO.	APPROVAL	DESCRIPTION

Stamp

PROFESSIONAL ENGINEER
03/14/2024
13079626
QUINN T. LYTHGOE
STATE OF UTAH

Designed By:	QL
Drawn By:	HS
Date:	03-06-2024
Checked By:	CS
Project No:	22-246

Drawing Title

SIGN FOUNDATIONS

Drawing number

SS103

BID SET

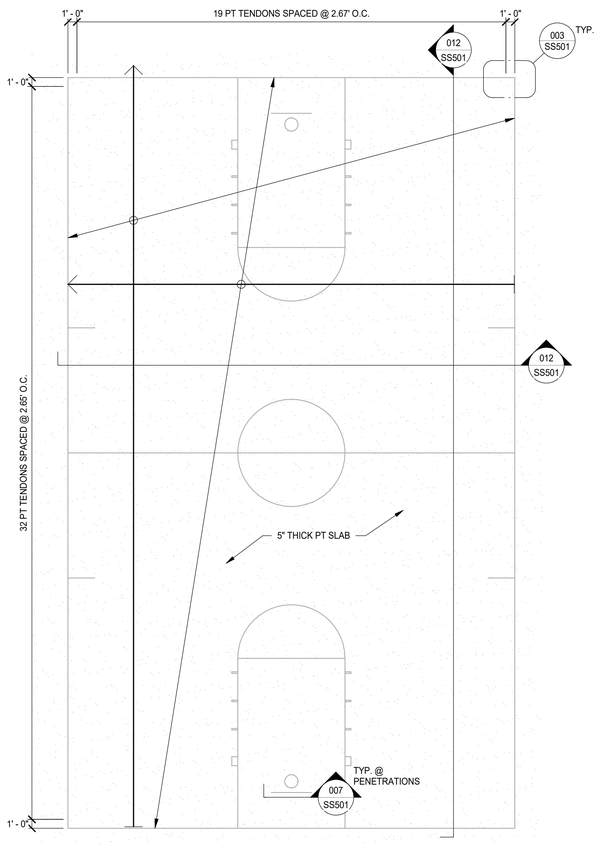

1 BASKETBALL PLAN
SCALE: 1/8" = 1'-0"

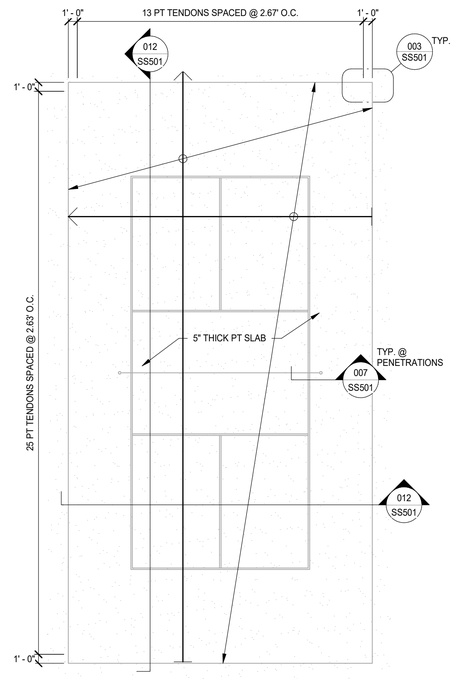

2 PICKLEBALL PLAN
SCALE: 1/8" = 1'-0"

POST-TENSIONED CONCRETE SPORT COURT SLAB GENERAL NOTES

1. REFER TO LANDSCAPE ARCHITECTURAL PLANS FOR ALL DIMENSIONS. CONTRACTOR TO VERIFY ALL DIMENSIONS BEFORE STARTING CONSTRUCTION. DO NOT SCALE DRAWINGS. RESOLVE ANY DISCREPANCY WITH THE ARCHITECT. NOTIFY STRUCTURAL ENGINEER THROUGH THE ARCHITECT OF ANY VARIATIONS FROM DIMENSIONS AND CONDITIONS SHOWN BY THIS DRAWING.
2. REFER TO ARCHITECTURAL PLANS FOR SLOPES, DRAINS, TOP OF SLAB ELEVATIONS, AND ADDITIONAL OPENINGS.
3. REFER TO ARCHITECTURAL PLANS FOR SLAB FINISH REQUIREMENTS, ETC.
4. SEE STRUCTURAL DETAIL SHEETS FOR OTHER TYPICAL POST-TENSIONED DETAILS NOT CUT ON THIS PLAN.
5. ALL MATERIALS, FABRICATION, CONSTRUCTION, AND FINISHING SPECIFICATIONS SHALL BE IN CONFORMANCE WITH THE LATEST EDITION OF THE FOLLOWING CODES AND STANDARDS:
   A. ACI 318
   B. PTI "POST-TENSIONING MANUAL"
   C. PTI "SPECIFICATION FOR UNBONDED SINGLE STRAND TENDONS"
   D. PTI "FIELD PROCEDURES MANUAL FOR UNBONDED SINGLE STRAND TENDONS"
6. PT TENDONS SHALL HAVE THE FOLLOWING PROPERTIES:
   A. 0.5" DIAMETER
   B. SEVEN-WIRE, SINGLE STRAND
   C. UNBONDED (SHEATHED)
   D. ASTM A416 GRADE 270 (MINIMUM ULTIMATE STRENGTH OF 270 KSI)
   E. LOW RELAXATION STEEL
7. PT TENDONS SHALL UTILIZE WEDGE TYPE ANCHORING SYSTEMS.
8. PT TENDONS SHALL BE STRAIGHT, UNIFORMLY SPACED, AND INSTALLED PER MANUFACTURER RECOMMENDATIONS, BUT MAY BE MOVED HORIZONTALLY UP TO 12 INCHES TO AVOID OBSTRUCTIONS IN THE SLAB.
9. PT TENDONS SHALL BE PROPERLY SUPPORTED OR CHAIRED IN THE MIDDLE OF THE SLAB AND SHOULD BE SECURED TO MAINTAIN THEIR HORIZONTAL AND VERTICAL POSITIONS DURING PLACEMENT OF THE CONCRETE.
10. THE CONCRETE MIX DESIGN SHALL BE SELECTED TO MINIMIZE EARLY CURING AND SHRINKAGE CRACKING THAT MAY FORM PRIOR TO TENDON STRESSING.
11. THE CONTRACTOR SHALL PROVIDE MEANS TO ENSURE THAT CONCRETE IS NOT SPLATTERED ON FENCE POSTS, LIGHT POLES, GATE POSTS, CONDUITS, OR OTHER EXISTING FACILITIES DURING CONSTRUCTION OF SLAB.
12. PT CONCRETE SLABS SHALL BE PLACED IN INDIVIDUAL CONTINUOUS POURS (CONSTRUCTION JOINTS ARE NOT PERMITTED).
13. SLAB STRESSING SHALL OCCUR AT A CONCRETE STRENGTH OF 2,000 PSI OR GREATER. CONTRACTOR MAY CONSIDER TENSIONING UP TO 50% OF THE MAXIMUM ULTIMATE TENSILE STRENGTH 24 HOURS AFTER PLACEMENT OF CONCRETE.
14. TENDONS SHALL BE TEMPORARILY STRESSED TO 80% OF THEIR MINIMUM ULTIMATE TENSILE STRENGTH TO OVERCOME FRICTION AND TO ENABLE WEDGE SEATING. FINAL TENDON ELONGATION SHALL BE AS SHOWN IN THE POST-TENSION SUPPLIER'S DRAWINGS.
15. CLOSURE STRIPS AND MOW STRIPS SHALL NOT BE PLACED UNTIL SHORTENING IN THE PT CONCRETE SLABS HAS OCCURRED.
16. ALL REBAR AND/OR PINS HOLDING SCREED CUPS (OR OTHER OBSTRUCTIONS) THAT PROHIBIT SHORTENING (I.E. CAUSE RESTRAINT TO SHORTENING) SHALL BE REMOVED AS CONCRETE IS PLACED.
17. CONTRACTOR SHALL PLACE ASTM C171 POLYETHYLENE SHEET FOR MOISTURE LOSS AND REFLECTANCE CONTROL ON CONCRETE SLAB FOR CURING (ULTRA CURE NCF BY UNIVERSAL FOREST PRODUCTS, INC. OR APPROVED EQUAL).
18. RECORDS SHALL BE KEPT BY THE CONTRACTOR DURING THE STRESSING OPERATIONS THAT INCLUDE:
   A. JACKING FORCES AND ELONGATIONS
   B. CALIBRATED GAUGE READINGS
   C. PROMPTLY UPON COMPLETION, SUBMIT TO THE ARCHITECT CERTIFIED COPIES OF THE RECORDED GAUGE READINGS AND ELONGATIONS.
19. THE SPECIAL INSPECTOR SHALL COMPLETE A STRESSING RECORD THAT CONTAINS THE FOLLOWING:
   A. DATE, INSPECTOR'S NAME, JACK IDENTIFICATION NUMBER, GAUGE IDENTIFICATION NUMBER, TENDON MARK, FINISHED TENDON LENGTH, REQUIRED ELONGATION, GAUGE PRESSURE REQUIRED TO ACHIEVE CALCULATED ELONGATION, ACTUAL ELONGATION, ACTUAL GAUGE PRESSURE, AND PERCENT DIFFERENCE IN ACTUAL ELONGATION TO REQUIRED ELONGATION.
   B. SUBMIT THIS RECORD TO THE ENGINEER OF RECORD FOR REVIEW PRIOR TO CUTTING TENDONS.

POST-TENSIONED CONCRETE SLAB - SYMBOLS & MARKS LEGEND

PT DEAD END

PT STRESSING END

INTERMEDIATE PT STRESSING END

blu line designs
planning | landscape architecture | design
8719 S. Sandy Parkway
Sandy, UT 84070
p 801.913.7994

CLIENT

FARMINGTON CITY
CONTACT: SYLVIA CLARK
PH: 801.939.9295
EMAIL:
SCLARK@FARMINGTON.UTAH.GOV

FARMINGTON

ENSIGN
THE STANDARD IN ENGINEERING
www.ensigneng.com

Ensign Project #: 12281A

IVY ACRES PARK

1397 WEST COOK LANE
FARMINGTON, UT

REVISIONS

NO.	APPROVED	DESCRIPTION

Stamp

PROFESSIONAL ENGINEER
03/14/2024
13079626
QUINN T. LYTHGOE
STATE OF UTAH

Designed By:	QL
Drawn By:	HS
Date:	03-06-2024
Checked By:	CS
Project No:	22-246

Drawing Title

PICKLEBALL & BASKETBALL PLAN

Drawing number

SS104

BID SET

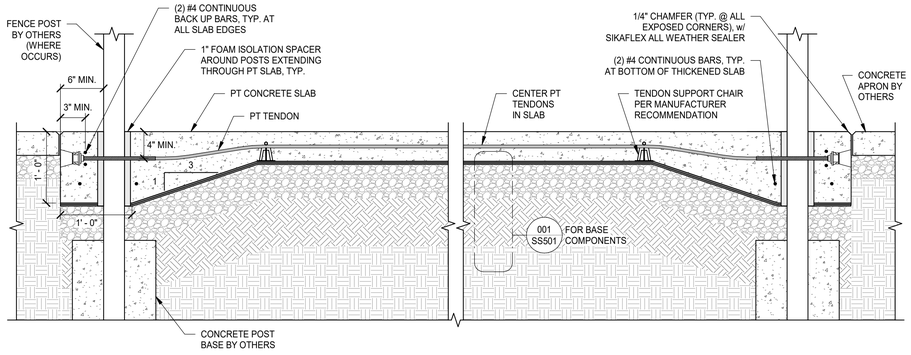

012 SLAB EDGE WITH FENCE POST
SCALE: N.T.S.

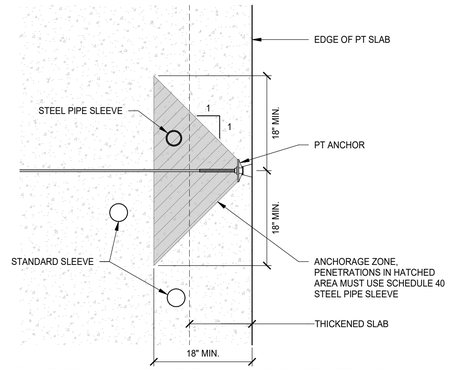

004 TYPICAL SLEEVE PLACEMENT RESTRICTIONS
SCALE: N.T.S.

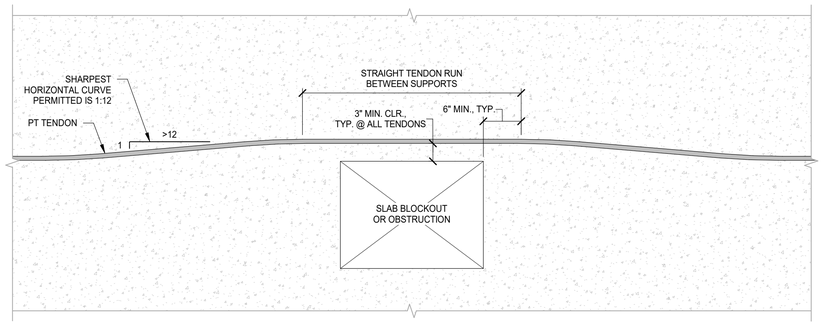

013 TYPICAL HORIZONTAL DEVIATION OF PT TENDON AT SLAB BLOCKOUT
SCALE: N.T.S.

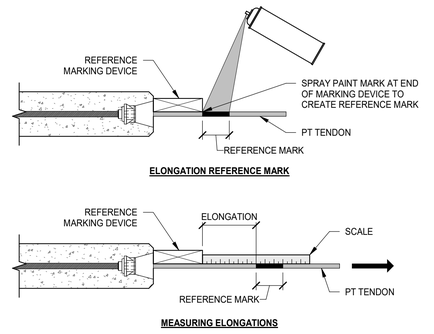

005 TYPICAL ELONGATION PROCEDURE
SCALE: N.T.S.

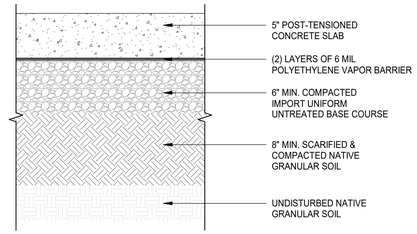

NOTES:
1. COBBLES WITH DIAMETER IN EXCESS OF 3" SHALL BE REMOVED FROM SCARIFIED AND COMPACTED NATIVE SOIL.
2. PROCESSED NATIVE MATERIALS AND ALL IMPORTED MATERIALS SHALL BE MOISTURE CONDITIONED TO WITHIN 2% OF THE OPTIMUM MOISTURE CONTENT AND COMPACTED TO 95% OF THE MAXIMUM DRY DENSITY AS DETERMINED BY ASTM D-1557.
3. REFER TO THE GEOTECHNICAL REPORT REQUIREMENTS FOR BASE PREPARATIONS. GEOTECHNICAL REPORT REQUIREMENTS GOVERN OVER THE INFORMATION SHOWN IN THIS DETAIL. UNSUITABLE SOILS SHALL BE REMOVED AND REPLACED AS REQUIRED BY THE GEOTECHNICAL ENGINEER OF RECORD.

001 TYPICAL SLAB AND BASE COMPONENTS
SCALE: N.T.S.

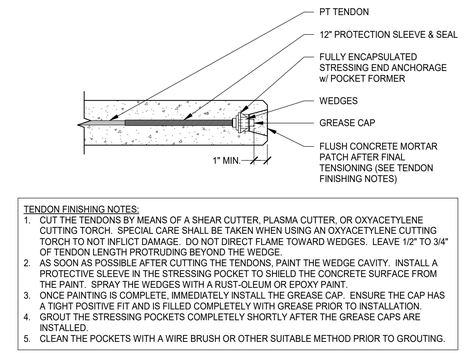

TENDON FINISHING NOTES:
1. CUT THE TENDONS BY MEANS OF A SHEAR CUTTER, PLASMA CUTTER, OR OXYACETYLENE CUTTING TORCH. SPECIAL CARE SHALL BE TAKEN WHEN USING AN OXYACETYLENE CUTTING TORCH TO NOT INFLICT DAMAGE. DO NOT DIRECT FLAME TOWARD WEDGES. LEAVE 1/2" TO 3/4" OF TENDON LENGTH PROTRUDING BEYOND THE WEDGE.
2. AS SOON AS POSSIBLE AFTER CUTTING THE TENDONS, PAINT THE WEDGE CAVITY. INSTALL A PROTECTIVE SLEEVE IN THE STRESSING POCKET TO SHIELD THE CONCRETE SURFACE FROM THE PAINT. SPRAY THE WEDGES WITH A RUST-OLEUM OR EPOXY PAINT.
3. ONCE PAINTING IS COMPLETE, IMMEDIATELY INSTALL THE GREASE CAP. ENSURE THE CAP HAS A TIGHT POSITIVE FIT AND IS FILLED COMPLETELY WITH GREASE PRIOR TO INSTALLATION.
4. GROUT THE STRESSING POCKETS COMPLETELY SHORTLY AFTER THE GREASE CAPS ARE INSTALLED.
5. CLEAN THE POCKETS WITH A WIRE BRUSH OR OTHER SUITABLE METHOD PRIOR TO GROUTING.

006 TYPICAL STRESSING END ANCHORAGE
SCALE: N.T.S.

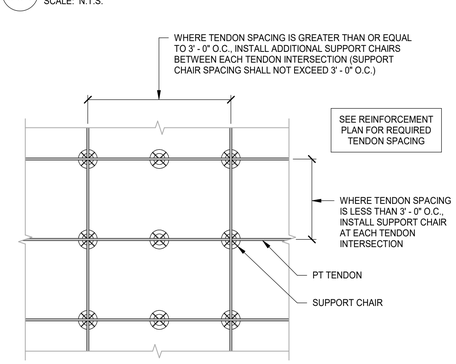

002 TYPICAL TENDON SUPPORTS
SCALE: N.T.S.

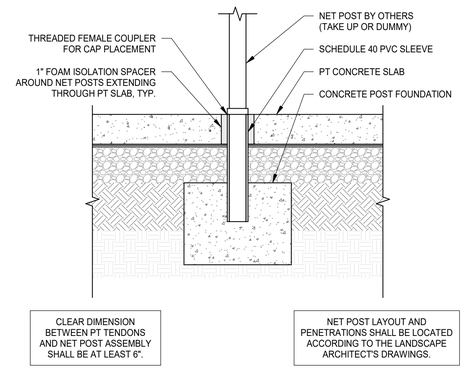

007 TYPICAL NET POST PENETRATION
SCALE: N.T.S.

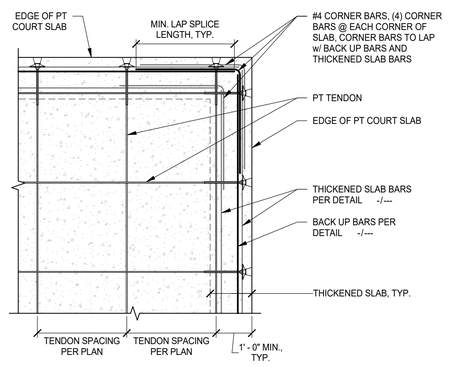

003 TYPICAL PT COURT SLAB CORNER
SCALE: N.T.S.

blu line designs
planning | landscape architecture | design
8719 S. Sandy Parkway
Sandy, UT 84070
p 801.913.7994

CLIENT

FARMINGTON CITY
CONTACT: SYLVIA CLARK
PH: 801.939.9295
EMAIL:
SCLARK@FARMINGTON.UTAH.GOV

FARMINGTON

ENSIGN
THE STANDARD IN ENGINEERING
www.ensigneng.com
Ensign Project #: 12281A

IVY ACRES PARK

1397 WEST COOK LANE
FARMINGTON, UT

REVISIONS

NO.	APPROVAL	DESCRIPTION

Stamp

PROFESSIONAL ENGINEER
03/14/2024
13079626
QUINN T. LYTHGOE
STATE OF UTAH

Designed By:	QL
Drawn By:	HS
Date:	03-06-2024
Checked By:	CS
Project No:	22-246

Drawing Title

PT DETAILS

BID SET

Drawing number

SS501

ACCESSIBILITY CLEARANCE NOTES

(ICC/ANSI A117.1-2017)

1. 60" DIAMETER WHEELCHAIR TURNING SPACE (304.3.1)
2. 30" X 48" CLEARANCE FOR WATER CLOSET (1004.11.3.1.2.2.1 & 1004.11.3.1.2.2.2)
3. 30" X 48" CLEAR FLOOR SPACE FOR FORWARD APPROACH TO SINK/WORK SPACE/APPLIANCE (305.3, 606.2, 1003.12.3.1, 1003.12.4.1, 1003.12.5.2)
4. 30" X 48" CLEAR FLOOR SPACE FOR PARALLEL/ADJACENT APPROACH TO SINK/APPLIANCE (305.3, 1004.10.1, 1004.11.1.1, 1004.12.2)
5. 30" X 48" CLEAR FLOOR SPACE BEYOND SWING OF DOOR FOR INDIVIDUAL USE (603.2.2 EXCEPTION, 1003.11.2 EXCEPTION)
6. 56" X 60" CLEARANCE FOR WATER CLOSET (604.3.1)
7. 66" X 60" CLEARANCE FOR WATER CLOSET (1003.11.2.4.4)

NOTE: CLEAR FLOOR OR GROUND SPACES, CLEARANCE AT FIXTURES, AND WHEELCHAIR TURNING SPACES SHALL BE PERMITTED TO OVERLAP (603.2.2, 1003.12.4.4, & 1004.11.3.1.2.2.4)

ADA REFERENCES

(ICC/ANSI A117.1-2017)

1. DRINKING FOUNAIN - 602
2. RESTROOM - 603-606
   MIRROR - 603.3
   WATER CLOSET - 604
   GRAB BARS - 604.5
   DISPENSER - 604.7
   LAVORATORY - 606

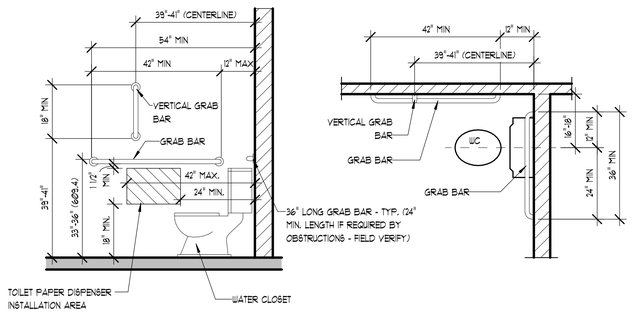

1 ACCESSIBILE TOILET CLEARANCES

1/2" = 1'-0"

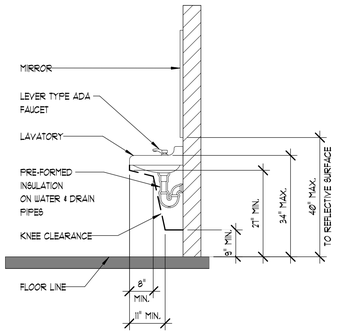

2 ACCESSIBILE VANITY CLEARANCES

1/2" = 1'-0"

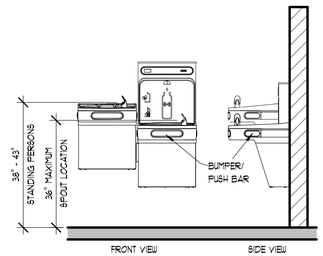

3 ACCESSIBILE DRINKING FOUNTAIN

1/2" = 1'-0"

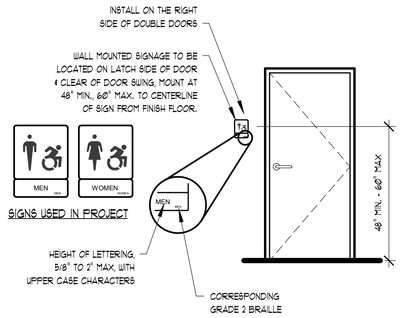

4 SIGN MOUNTING DETAIL

3/8" = 1'-0"

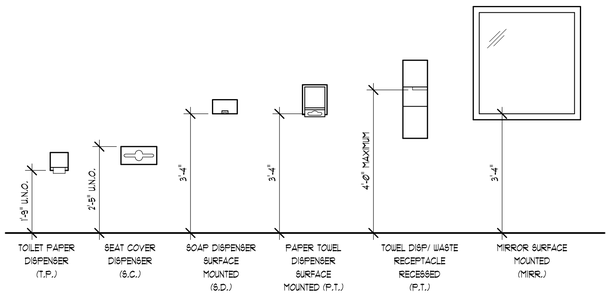

5 ACCESSORY MOUNTING HEIGHTS

1/2" = 1'-0"

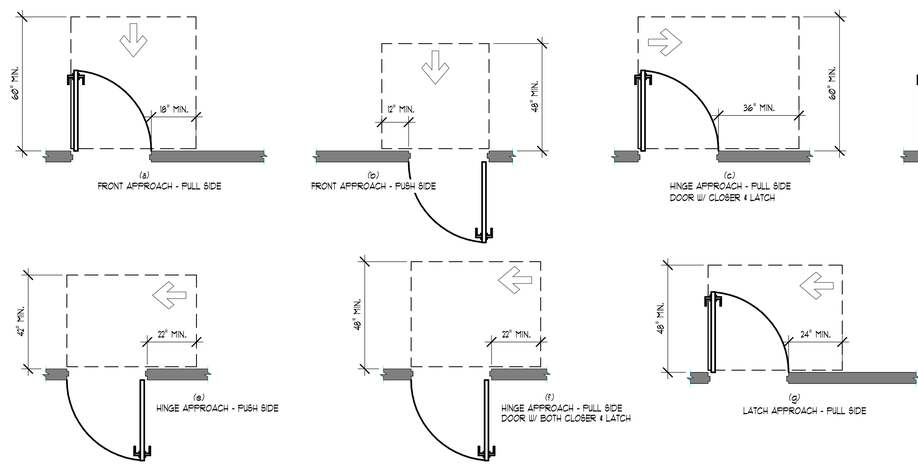

6 ACCESSIBILE DOOR CLEARANCES

3/8" = 1'-0"

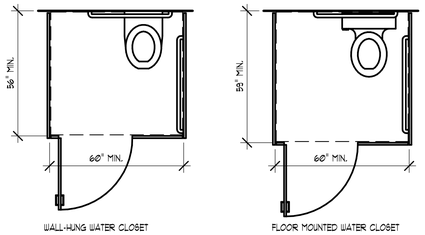

7 ACCESSIBILE TOILET COMPARTMENT

3/8" = 1'-0"

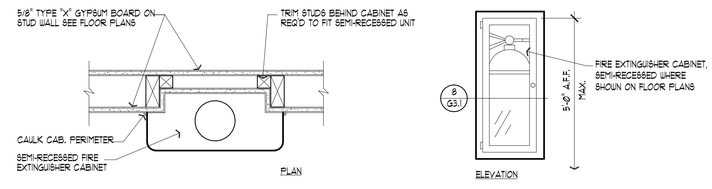

8 FIRE EXTINGUISHER DETAIL

1 1/2" = 1'-0"

100 PERCENT SET

blu line designs
planning | landscape architecture | design
8719 S. Sandy Parkway
Sandy, UT 84070
p 801.879.3157

CLIENT

FARMINGTON CITY
CONTACT: SYLVIA CLARK
PH: 801.939.9295
EMAIL: SCLARK@FARMINGTON.UTAH.GOV

FARMINGTON

WPA Architecture
1535 N FREEDOM BLVD, STE 360
PROVO, UTAH 84604
801.374.0800
info@wpa-architecture.com

IVY ACRES PARK

1397 WEST COOK LANE
FARMINGTON, UTAH

REVISIONS

NO.	APPROVED	DESCRIPTION

Stamp



Designed By:	BTF
Drawn By:	RS
Date:	03.06.2024
Checked By:	BTF
Project No:	22-246

Drawing Title

ACCESSIBILITY REQUIREMENTS

Drawing number

G1.3



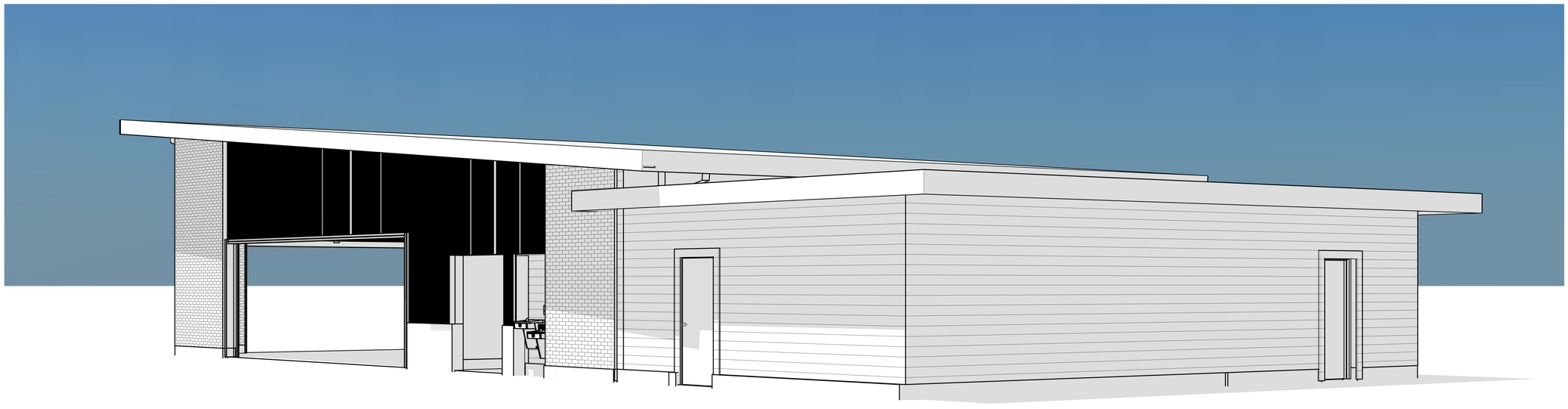

100 PERCENT SET

blu line designs
planning | landscape architecture | design

8719 S. Sandy Parkway
Sandy, UT 84070
p 801.679.3157

CLIENT

FARMINGTON CITY
CONTACT: SYLVIA CLARK
PH: 801.939.9295
EMAIL:
SCLARK@FARMINGTON.UTAH.GOV

FARMINGTON

WPA architecture

WPA Architecture
1535 N FREEDOM BLVD, STE 360
PROVO, UTAH 84604
801.374.0800
info@wpa-architecture.com

IVY ACRES PARK

1397 WEST COOK LANE
FARMINGTON, UTAH

REVISIONS

NO.	APPROVED	DESCRIPTION

Stamp



Designed By:	BTF
Drawn By:	RS
Date:	03.06.2024
Checked By:	BTF
Project No:	22-246

Drawing Title

3D VIEWS

Drawing number

G1.4

SHEET NOTES:

- TYPICAL REFERENCE FOR CONSTRUCTION TYPE - SEE SHEET A3.1
- TYPICAL REFERENCE FOR DOOR TYPE - SEE SHEET A3.2
- TYPICAL REFERENCE FOR WINDOW TYPE - SEE SHEET N/A

1. PREFINISHED METAL SOFFIT
2. 24" X 30" ATTIC ACCESS HATCH
3. PREFINISHED STANDING SEAM METAL ROOF
4. SINK - SEE PLUMBING DRAWINGS
5. WATER HEATER - SEE PLUMBING DRAWINGS
6. FLOOR DRAIN - SEE PLUMBING DRAWINGS
7. HVAC EQUIPMENT - SEE MECHANICAL DRAWINGS
8. LINE OF WALL BELOW

CEILING LEGEND

- GYPSUM BOARD
- 2x2 ACOUSTIC LAY-IN CEILING TILE
- PRE-FINISHED METAL SOFFIT
- PRE-FINISHED FIBER CEMENT PANEL SOFFIT WOOD GRAIN FINISH
- PAINTED 3/4" PLYWOOD
- METAL B-DECK - PAINTED
- 2x2 LAY-IN LIGHT
- RECESSED CAN LIGHT
- RETURN VENT
- SUPPLY VENT

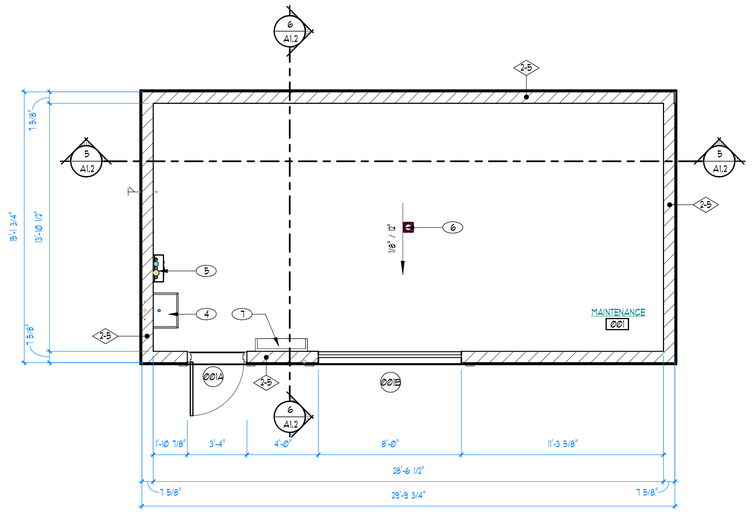

1 FLOOR PLAN
1/4" = 1'-0"

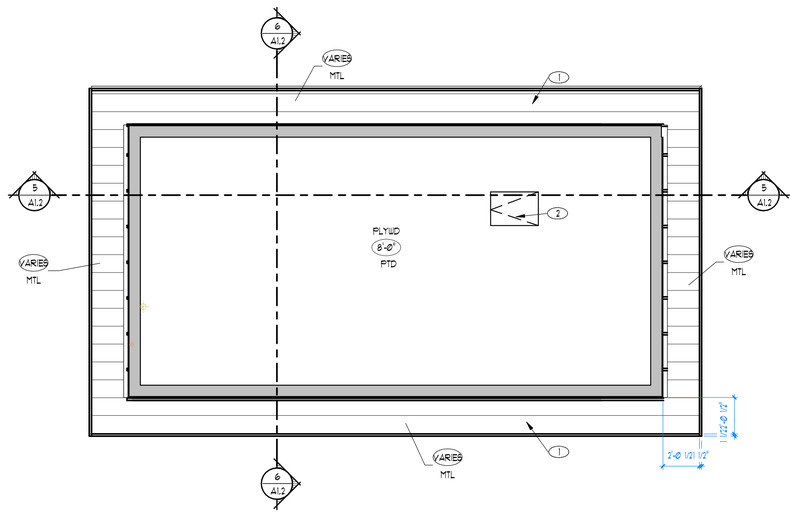

2 REFLECTED CEILING PLAN
1/4" = 1'-0"

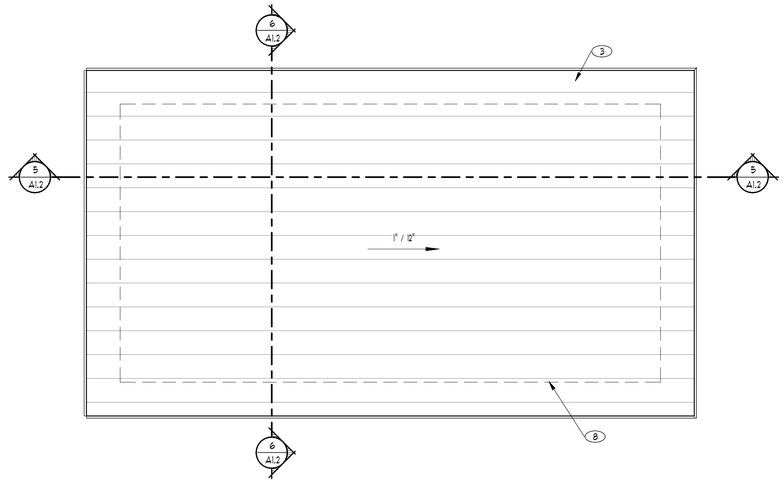

3 ROOF PLAN
1/4" = 1'-0"

blu line designs
planning | landscape architecture | design
8719 S. Sandy Parkway
Sandy, UT 84070
p 801.879.3157

CLIENT
FARMINGTON CITY
CONTACT: SYLVIA CLARK
PH: 801.939.9295
EMAIL:
SCLARK@FARMINGTON.UTAH.GOV

WPA Architecture
1535 N FREEDOM BLVD, STE 360
PROVO, UTAH 84604
801.374.0800
info@wpa-architecture.com

IVY ACRES PARK

1397 WEST COOK LANE
FARMINGTON, UTAH

REVISIONS

NO.	APPROVED	DESCRIPTION

Stamp

BRANDON T. FRIEDRICH
LICENSED ARCHITECT
340316-0301
03.06.2024
STATE OF UTAH

Designed By:	BTF
Drawn By:	RS
Date:	03.06.2024
Checked By:	BTF
Project No:	22-246

Drawing Title

SITE BLDG. FLOOR PLANS

Drawing number

A1.1

100 PERCENT SET

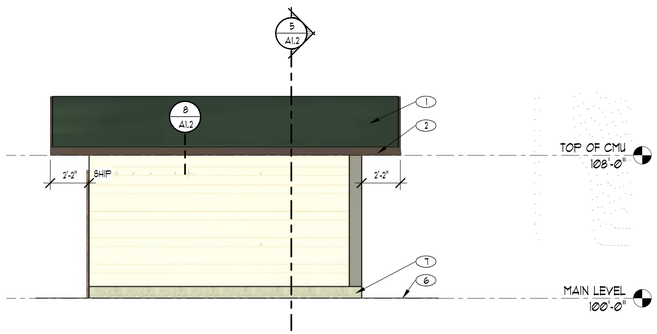

1 EAST ELEVATION

1/4" = 1'-0"

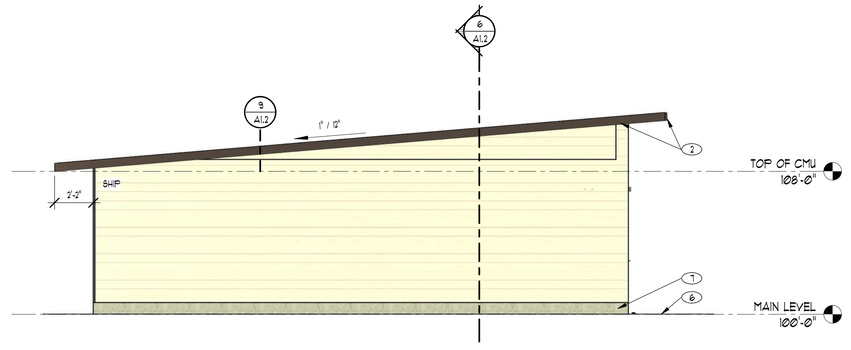

2 NORTH ELEVATION

1/4" = 1'-0"

SHEET NOTES:

- TYPICAL REFERENCE FOR CONSTRUCTION TYPE - SEE SHEET A3.1
- TYPICAL REFERENCE FOR DOOR TYPE - SEE SHEET A3.2
- TYPICAL REFERENCE FOR WINDOW TYPE - SEE SHEET N/A

1. PREFINISHED STANDING SEAM METAL ROOF OVER HIGH TEMP. SELF ADHERING PRIMARY UNDERLAYMENT
2. PREFINISHED METAL FASCIA
3. PREFABRICATED WOOD TRUSS - SEE STRUCT.
4. PREFINISHED METAL VENTILATED SOFFIT
5. FIBER CEMENT TRIM
6. APPROXIMATE GRADE - SEE CIVIL DRAWINGS
7. 8" EXPOSED CONCRETE FOUNDATION WITH RUBBED FINISH
8. CAST IN PLACE CONCRETE FOOTING AND FOUNDATION WITH RUBBED SURFACE ON EXPOSED SURFACES
9. CONCRETE SLAB OVER 4" OF FREE DRAINING GRAVEL
10. SUBGRADE

EXTERIOR FINISH SCHEDULE

MARK:	ITEM DESCRIPTION:	MANUFACTURER:	COLOR/FINISH:
BATT	ALUMINUM BATTENS	AL-13	COLOR: MAPLE
BRICK	4 X 4 X 16 EMPORER BRICK	INTERSTATE BRICK	COLOR: PLATINUM
CMU	8" HONED CMU BLOCK w/ SINGLE SCORE	SUNROC	COLOR: NATURAL GRAY
CONC	EXPOSED ARCHITECTURAL CONCRETE	N/A	COLOR: NATURAL GRAY
DR-1	HOLLOW METAL DOORS	SHERWIN WILLIAMS	COLOR: ANONYMOUS (SW 7046)
FR-1	HOLLOW METAL FRAMES	SHERWIN WILLIAMS	COLOR: PORPOISE (SW 7047)
MTL-1	STANDING SEAM METAL ROOF	COATED METALS GROUP	COLOR: TBD
MTL-2	PAINTED STRUCTURAL COLUMN / BEAM	SHERWIN WILLIAMS	COLOR: TBD
MTL-3	PREFINISHED METAL DRIP EDGE	COATED METALS GROUP	COLOR: MATCH FASCIA
MTL-4	PREFINISHED METAL FASCIA	COATED METALS GROUP	COLOR: TBD
SHIP	FIBER CEMENT LAP SHIP LAP SIDING PROVIDE MITERED EXTERIOR CORNERS	SHERWIN WILLIAMS	COLOR: PORPOISE (SW 7047)

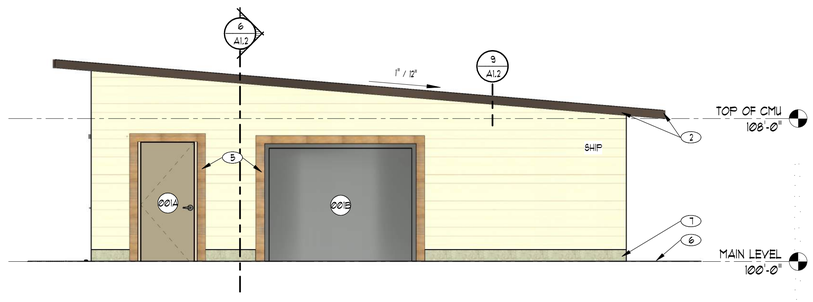

3 SOUTH ELEVATION

1/4" = 1'-0"

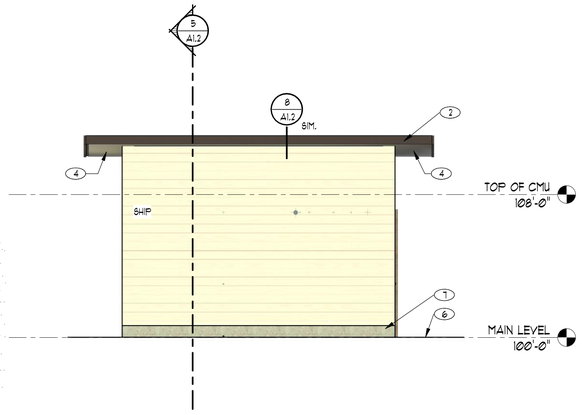

4 WEST ELEVATION

1/4" = 1'-0"

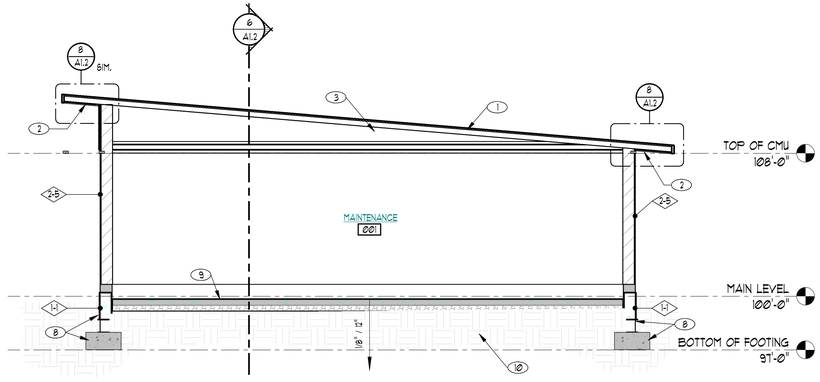

5 BUILDING SECTION

1/4" = 1'-0"

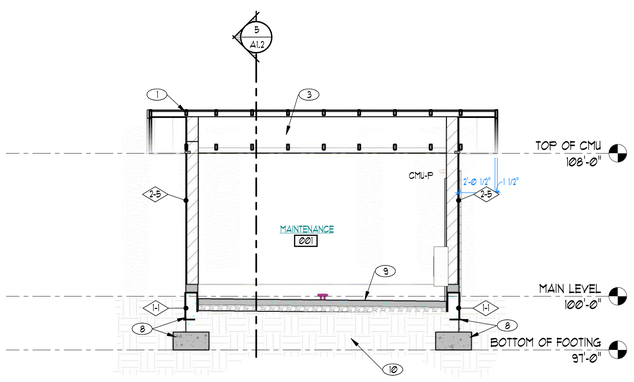

6 BUILDING SECTION

1/4" = 1'-0"

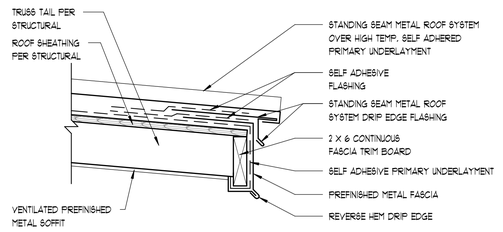

8 FASCIA AT EAVE

1 1/2" = 1'-0"

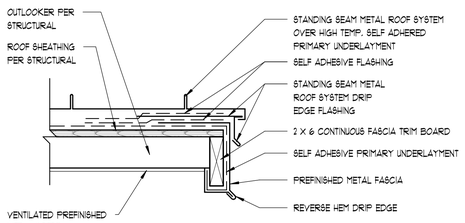

9 FASCIA AT RAKE

1 1/2" = 1'-0"

100 PERCENT SET

blu line designs
planning | landscape architecture | design
8719 S. Sandy Parkway
Sandy, UT 84070
p 801.679.3157

CLIENT

FARMINGTON CITY
CONTACT: SYLVIA CLARK
PH: 801.939.9295
EMAIL:
SCLARK@FARMINGTON.UTAH.GOV

WPA Architecture
1535 N FREEDOM BLVD, STE 360
PROVO, UTAH 84604
801.374.0800
info@wpa-architecture.com

IVY ACRES PARK

1397 WEST COOK LANE
FARMINGTON, UTAH

REVISIONS

NO.	APPROVAL	DESCRIPTION

Stamp

BRANDON T. FRY
LICENSED ARCHITECT
340317 0130
03.06.2024
STATE OF UTAH

Designed By:	BTF
Drawn By:	RS
Date:	03.06.2024
Checked By:	BTF
Project No:	22-246

Drawing Title

SITE BLDG. ELEVATIONS AND SECTIONS

Drawing Number

A1.2

CODE ANALYSIS

APPLICABLE CODES

2021 INTERNATIONAL BUILDING CODE (IBC)
2021 INTERNATIONAL PLUMBING CODE
2021 INTERNATIONAL MECHANICAL CODE
2021 INTERNATIONAL ENERGY CONSERVATION CODE
2021 INTERNATIONAL FIRE CODE
2020 NATIONAL ELECTRICAL CODE (NEC)
AMERICAN'S WITH DISABILITIES ACT
ICC A117.1 - 2017

OCCUPANCIES AND TYPE OF CONSTRUCTION (IBC CHAPTERS 3 & 6)

MAIN OCCUPANCY: U

CONSTRUCTION TYPE: V-B

OCCUPANT LOAD
PAVILION BUILDING: ACCESSORY STORAGE/MECH: 824.18 SQ. FT. / 300 GROSS x 2.75 (3)
ASSEMBLY: 1,663.55 SQ. FT. / 15 NET x 110.93 (111)

TOTAL: 114

AREA CALCULATIONS
AREA MODIFICATIONS BY OCCUPANCY

NO INCREASE REQUIRED AS SIZE OF BUILDING WITHIN ALLOWABLE BUILDING AREA FOR OCCUPANCY AND A BUILDING OF ONE STORY ABOVE GRADE PLANE WITHOUT AN AUTOMATIC FIRE SPRINKLER SYSTEM.

HEIGHT OF BUILDING (TABLES 504.3 AND 504.4; SECTION 504)

	TOTAL ALLOWABLE HEIGHT	ACTUAL HEIGHT
HEIGHT IN STORIES		
PAVILION BLDG.	1 STORY	1 STORY
RESTROOM / MECH.	1 STORY	1 STORY
HEIGHT IN FEET		
PAVILION BLDG.	40'-0"	19'-0"

NOTE: THE BUILDING WILL NOT BE FIRE SPRINKLED PER SECTION 903.3.1.1 (NFPA-13).

FIRE-RESISTANCE OF EXTERIOR WALLS AND OPENINGS (SECTIONS 601 AND 704.8)
FIRE RESISTANCE RATING FOR EXTERIOR WALLS

EXTERIOR BEARING WALL	(TABLE 601)	
NORTH, EAST, SOUTH & WEST EXTERIOR WALLS		NOT REQUIRED
EXTERIOR NON-BEARING WALL	(TABLES 601 AND 602)	NOT REQUIRED

NOTE: FIRE SEPARATION DISTANCE IS GREATER THAN 10 FEET ON ALL SIDES

PROTECTION OF EXTERIOR WALL OPENINGS

NO PROTECTION IS REQUIRED OF EXTERIOR WALL OPENINGS AS ALL FIRE SEPARATION DISTANCES ARE GREATER THAN 20 FEET AS SHOWN ON IBC TABLE 705.8.

OCCUPANCY SEPARATIONS (TABLE 508.4)
NONE REQUIRED

FIRE RATED CONSTRUCTION (IBC TABLE 601)

BUILDING ELEMENT	RATING	CODE REFERENCE
HORIZONTAL SEPARATION (R OCCUPANCY ONLY)	NON-RATED	SECTION 420.3
OCCUPANCY SEPARATION (FIRE PARTITIONS)	NOT REQUIRED	SECTION 508
MECHANICAL ROOM SEPARATION	NOT REQUIRED	TABLE 509
PRIMARY STRUCTURAL FRAME PROTECTION	NON-RATED	TABLE 601
BEARING WALLS - EXTERIOR	NON-RATED	TABLE 601
BEARING WALLS - INTERIOR	NON-RATED	TABLE 601
FLOOR CONSTRUCTION	NON-RATED	TABLE 601
ROOF CONSTRUCTION	NON-RATED	TABLE 601
NON-BEARING WALLS - EXTERIOR	NON-RATED	TABLE 602
NON-BEARING WALLS - INTERIOR	NON-RATED	TABLE 602
PROTECTION OF EXTERIOR OPENINGS	NOT REQUIRED	SECTION / TABLE 705.8
FIRE WALLS	NOT REQUIRED	TABLE 706.4
FIRE BARRIERS	NOT REQUIRED	SECTION 707
FIRE PARTITIONS	NOT REQUIRED	SECTION 708
HORIZONTAL ASSEMBLIES	NON-RATED	SECTION 711.2
VERTICAL OPENINGS (FIRE BARRIER)	NOT REQUIRED	SECTION 712
SHAFT ENCLOSURES (FIRE BARRIER)	NOT REQUIRED	SECTION 713
AUTOMATIC SPRINKLER SYSTEM	NO	SECTION 903
FIRE RATED CORRIDORS (FIRE PARTITIONS)	NOT REQUIRED	TABLE 1020.1
INTERIOR EXIT STAIRWAYS (FIRE BARRIER)	NOT REQUIRED	SECTION 1023

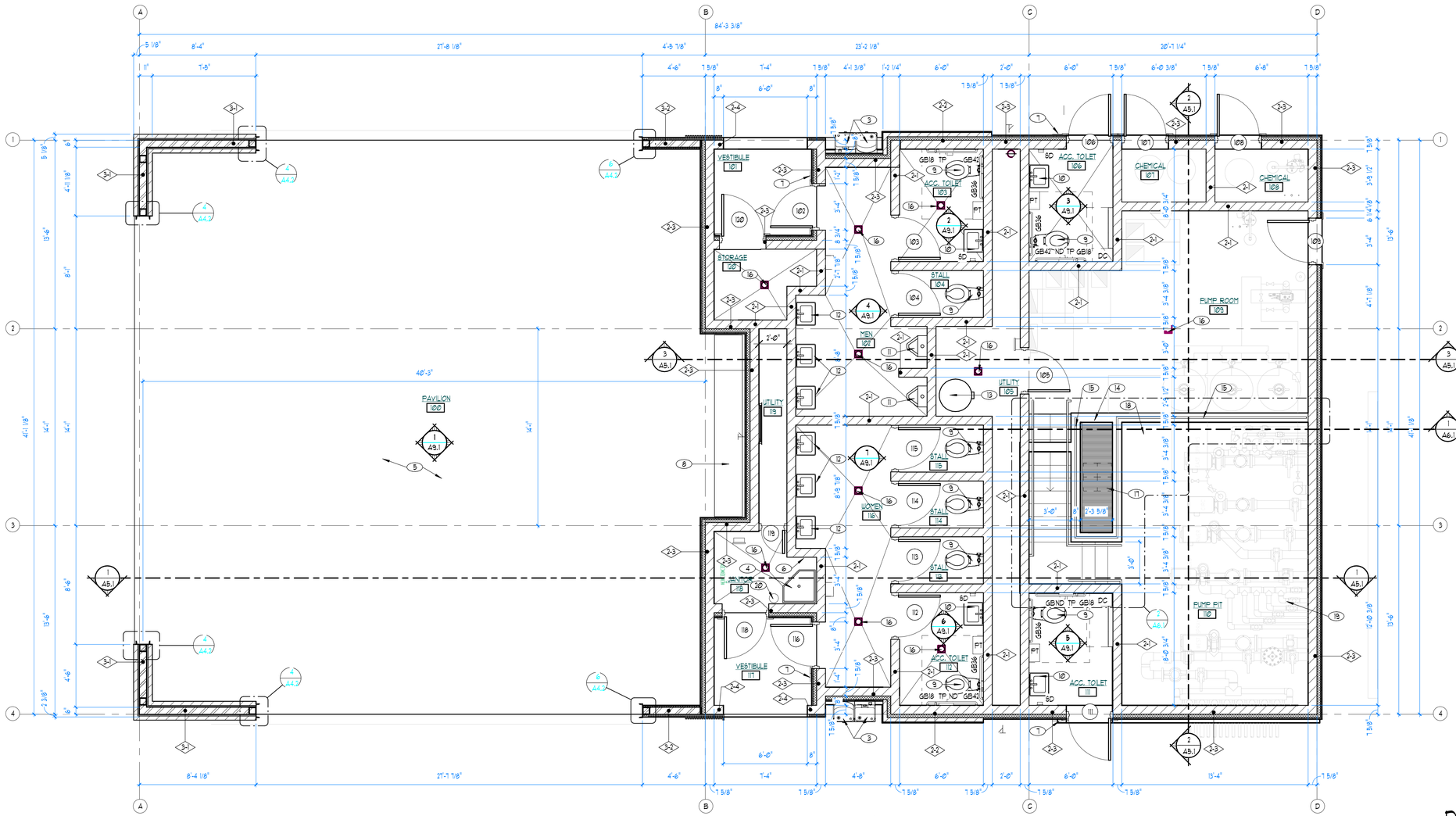

1 FLOOR PLAN
1/4" = 1'-0"

SHEET NOTES:

- TYPICAL REFERENCE FOR CONSTRUCTION TYPE - SEE SHEET A3.1
- TYPICAL REFERENCE FOR DOOR TYPE - SEE SHEET A3.2
- TYPICAL REFERENCE FOR WINDOW TYPE - SEE SHEET N/A

3 DRINKING FOUNTAIN - SEE PLUMBING DWGS.
4 MOP SINK - SEE PLUMBING DWGS.
5 CONCRETE SLAB OVER GRAVEL BASE - SEE CIVIL & LANDSCAPE DWGS.
6 MOP & BROOM HOLDER
7 ROOM IDENTIFICATION SIGN - SEE DETAIL 4/A1.3
8 4" THICK CAST-IN-PLACE CONCRETE COUNTERTOP W/ BRACKETS @ 32" O.C. MAXIMUM. SEE DETAIL 1/A3.2.
9 WATER CLOSET - SEE PLUMBING DRAWINGS
10 WALL HUNG LAVATORY - SEE PLUMBING DRAWINGS
11 WALL-HUNG URINAL - SEE PLUMBING DRAWINGS
12 SINK - SEE PLUMBING DRAWINGS
13 WATER HEATER - SEE PLUMBING DRAWINGS
14 CAST-IN-PLACE CONCRETE WALL - TOP OF WALL AT 6" ABOVE FINISH FLOOR
15 GALVANIZED STEEL, 42" HIGH GUARD RAIL
16 FLOOR DRAIN - SEE PLUMBING DRAWINGS
17 FIBERGLASS PIT COVER OVER 48" DEEP BACKFLOW PIT
18 36"X36"X36" PRECAST CONCRETE SUMP PIT WITH FIBERGLASS GRATE - SEE PLUMBING DRAWINGS FOR SUMP PUMP. SLOPE FLOOR OF PUMP PIT TO SLOPE TO SUMP.
19 SPLASH PAD MECHANICAL EQUIPMENT SEE SPLASH PAD MECHANICAL DRAWINGS
20 WALL HUNG FIRE EXTINGUISHER

ACCESSORY ABBREVIATIONS

GB18	18" VERTICAL GRAB BAR (CFCI)
GB36	36" GRAB BAR (CFCI)
GB42	42" GRAB BAR (CFCI)
TP	TOILET PAPER DISPENSER (CFCI)
ND	SANITARY NAPKIN DISPOSAL (CFCI)
SD	SOAP DISPENSER (CFCI)
PT	PAPER TOWEL DISPENSER (CFCI)
HD	HAND DRYER (CFCI)
ACS	ADULT CHANGING STATION (CFCI)
DCS	DIAPER CHANGING STATION (CFCI)
MIRR	24"X36" MIRROR (CFCI)

DEFINITIONS:
CFCI: CONTRACTOR FURNISHED, CONTRACTOR INSTALLED
OFOI: OWNER FURNISHED, OWNER INSTALLED

GENERAL NOTES

A. ALL EXIT ACCESS DOORS AND EXITS SHALL BE OPENABLE FROM THE INSIDE WITHOUT THE USE OF A KEY OR ANY SPECIAL KNOWLEDGE OR EFFORT. USE OF MANUAL FLUSH BOLTS, EDGE BOLTS, TOP OR BOTTOM BOLTS, ETC. IS PROHIBITED.

B. GLAZING IN DOORS OR IN FIXED OR OPERABLE PANELS ADJACENT TO A DOOR WHERE THE NEAREST EXPOSED EDGE IS WITHIN A 24 INCH ARC OF THE DOOR AND WHERE THE BOTTOM EXPOSED EDGE IS LESS THAN 60 INCHES ABOVE THE WALKING SURFACE MUST BE TEMPERED.

C. TANK TYPE WATER CLOSETS SHALL HAVE A MAXIMUM WATER USE OF 1.6 GALLONS PER FLUSH. SHOWERS SHALL HAVE A MAXIMUM FLOW OF 2.5 GALLONS PER MINUTE.

D. BURNING OF CONSTRUCTION WASTE MATERIALS IS PROHIBITED AT ALL TIMES.

E. PROVIDE ONE RECESSED 2-A FIRE EXTINGUISHER FOR EVERY 3,000 SQ. FT. OF FLOOR AREA WITH A MAXIMUM TRAVEL DISTANCE OF 75 FEET TO AN EXTINGUISHER.

F. STORAGE OF EQUIPMENT, SOILS, CONSTRUCTION MATERIALS ON PUBLIC RIGHT-OF-WAY (STREETS/SIDEWALKS) OR EASEMENT IS EXPRESSLY PROHIBITED.

G. GENERAL CONTRACTOR TO PROCURE ALL REQUIRED PERMITS FROM AUTHORITY HAVING JURISDICTION, INCLUDING BUT NOT LIMITED TO BUILDING, ENGINEERING, RIGHT OF WAY, AND OTHER PERMITS REQUIRED FOR SUB-CONTRACTOR WORK.

H. GENERAL CONTRACTOR TO PROVIDE REQUIRED FIRE EXTINGUISHERS TO BE PRESENT DURING CONSTRUCTION.

I. DIMENSIONS ARE SHOWN TO FACE OF STUD, UNLESS NOTED OTHERWISE

DEFERRED SUBMITTALS

CERTAIN ITEMS REQUIRE APPROVAL OF THE AHJ'S BUILDING DEPARTMENT PRIOR TO FABRICATION, DELIVERY, OR INSTALLATION. SUBMITTALS, INCLUDING SHOP DRAWINGS, PRODUCT INFORMATION, PRODUCT CERTIFICATES, PRODUCT TEST REPORTS, ETC. SHALL BE SUBMITTED TO THE ARCHITECT. AFTER REVIEW BY THE ARCHITECT AND/OR ARCHITECTURAL CONSULTANTS, THE ARCHITECT WILL FORWARD THE SUBMITTALS TO THE BUILDING DEPARTMENT. THE CONTRACTOR SHALL PROVIDE THE SUBMITTALS IN A TIMELY MANNER AND ALLOW SUFFICIENT TIME FOR REVIEW BY THE ARCHITECT AND CITY.

DEFERRED ITEMS: PRE-FABRICATED WOOD TRUSSES

100 PERCENT SET

blu line designs
planning | landscape architecture | design
8719 S. Sandy Parkway
Sandy, UT 84070
p 801.879.3157

CLIENT
FARMINGTON CITY
CONTACT: SYLVIA CLARK
PH: 801.939.9295
EMAIL: SCLARK@FARMINGTON.UTAH.GOV

WPA Architecture
1535 N FREEDOM BLVD, STE 360
PROVO, UTAH 84604
801.374.0800
info@wpa-architecture.com

IVY ACRES PARK

1397 WEST COOK LANE
FARMINGTON, UTAH

REVISIONS

NO.	symmetry	DESCRIPTION

Stamp
BRANDON T. FULLER
6401804-0301
03.06.2024
STATE OF UTAH

Designed By:	BTF
Drawn By:	RS
Date:	03.06.2024
Checked By:	BTF
Project No:	22-246

Drawing Title
FLOOR PLAN

Drawing number
A2.1

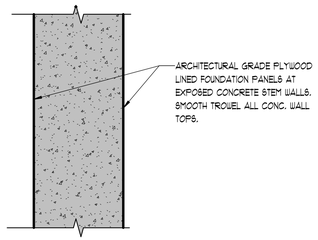

1-1 WALL CONSTRUCTION
1 1/2" = 1'-0"

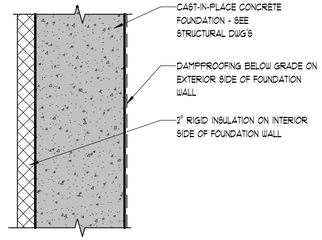

1-2 WALL CONSTRUCTION
1 1/2" = 1'-0"

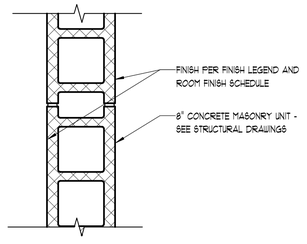

2-1 WALL CONSTRUCTION
1 1/2" = 1'-0"

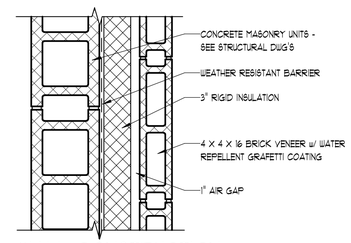

2-2 WALL CONSTRUCTION
1 1/2" = 1'-0"

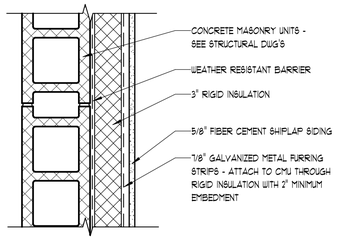

2-3 WALL CONSTRUCTION
1 1/2" = 1'-0"

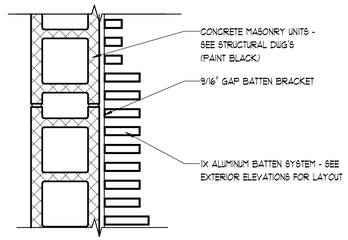

2-4 WALL CONSTRUCTION
1 1/2" = 1'-0"

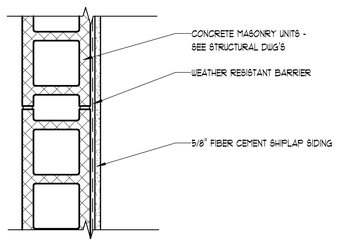

2-5 WALL CONSTRUCTION
1 1/2" = 1'-0"

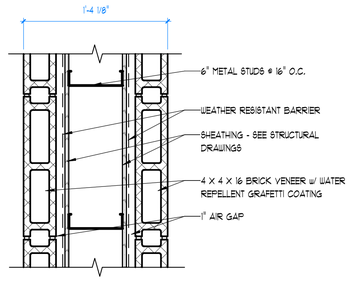

3-1 WALL CONSTRUCTION
1 1/2" = 1'-0"

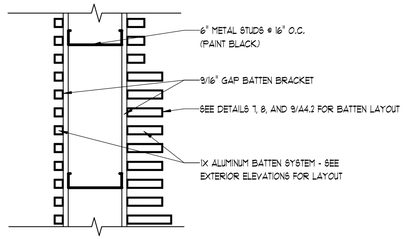

3-2 WALL CONSTRUCTION
1 1/2" = 1'-0"

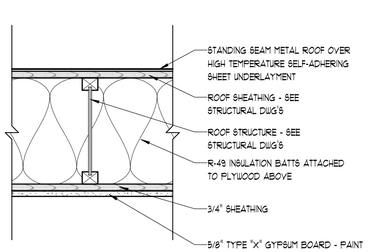

4-1 ROOF/CEILING CONSTRUCTION
1 1/2" = 1'-0"

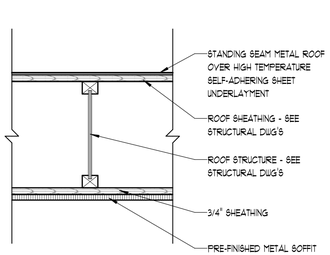

4-2 ROOF/CEILING CONSTRUCTION
1 1/2" = 1'-0"

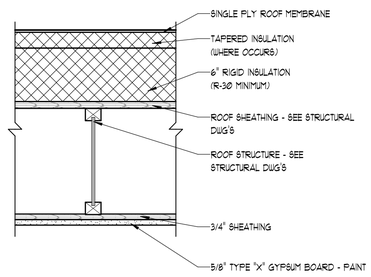

4-3 ROOF/CEILING CONSTRUCTION
1 1/2" = 1'-0"

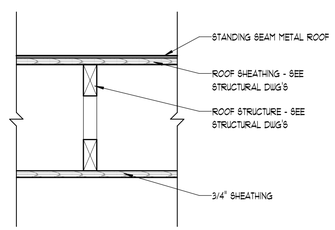

4-4 ROOF/CEILING CONSTRUCTION
1 1/2" = 1'-0"

ROOM FINISH SCHEDULE

NUMBER	NAME	FLOOR	BASE	WALL FINISH NORTH	WALL FINISH EAST	WALL FINISH SOUTH	WALL FINISH WEST	CEILING	COMMENTS
100	PAVILION	SEE SITE PLAN	NONE	BRICK / BATT	SHIP	BRICK / BATT	BRICK / BATT	MTL	
101	VESTIBULE	CONC	CONC	CMU	SHIP	SHIP	CMU	MTL	
102	MEN	RES	RES	PTDW-1	PTDW-1	PTDW-1	PTDW-1	PTDC-1	
103	ACC. TOILET	RES	RES	PTDW-1	PTDW-1	PTDW-1	PTDW-1	PTDC-1	
104	STALL	RES	RES	PTDW-1	PTDW-1	PTDW-1	PTDW-1	PTDC-1	
105	UTILITY	CONC	NONE	NONE	NONE	NONE	NONE	NONE	
106	ACC. TOILET	RES	RES	PTDW-1	PTDW-1	PTDW-1	PTDW-1	PTDC-1	
107	CHEMICAL	CONC	NONE	PTDW-1	PTDW-1	PTDW-1	PTDW-1	PTDC-1	
108	CHEMICAL	CONC	NONE	PTDW-1	PTDW-1	PTDW-1	PTDW-1	PTDC-1	
109	PUMP ROOM	CONC	NONE	PTDW-1	PTDW-1	PTDW-1	PTDW-1	PTDC-1	
110	PUMP PIT	CONC	NONE	PTDW-1	PTDW-1	PTDW-1	PTDW-1	PTDC-1	
111	ACC. TOILET	RES	RES	PTDW-1	PTDW-1	PTDW-1	PTDW-1	PTDC-1	
112	ACC. TOILET	RES	RES	PTDW-1	PTDW-1	PTDW-1	PTDW-1	PTDC-1	
113	STALL	RES	RES	PTDW-1	PTDW-1	PTDW-1	PTDW-1	PTDC-1	
114	STALL	RES	RES	PTDW-1	PTDW-1	PTDW-1	PTDW-1	PTDC-1	
115	STALL	RES	RES	PTDW-1	PTDW-1	PTDW-1	PTDW-1	PTDC-1	
116	WOMEN	RES	RES	PTDW-1	PTDW-1	PTDW-1	PTDW-1	PTDC-1	
117	VESTIBULE	RES	CONC	SHIP	SHIP	CMU	CMU	MTL	
118	JANITOR	RES	RES	PTDW-1	PTDW-1	PTDW-1	PTDW-1	PTDC-1	
119	UTILITY	CONC	NONE	NONE	NONE	NONE	NONE	NONE	
120	STORAGE	CONC	NONE	PTDW-1	PTDW-1	PTDW-1	PTDW-1	PTDC-1	

FINISH LEGEND

BASE					
MARK	MATERIAL TYPE	MANUFACTURER	# / COLOR	SIZE	NOTES
CONC	CONCRETE	N/A	NATURAL CONCRETE COLOR	8"	CONCRETE STEM WALL
RES	RESINOUS FLOOR	DUR-A-FLEX	SEE RES FLOOR BELOW	6"	WRAP UP WALL FROM FLOOR
FLOORS					
MARK	MATERIAL TYPE	MANUFACTURER	# / COLOR	SIZE	NOTES
CONC	SEALED CONCRETE	SEE SPEC	STYLE: CLEAR SEAL COLOR: NONE	--	--
RES	RESINOUS FLOORING	DUR-A-FLEX	STYLE: DUR-A-GUARD SL COLOR: SUBMIT FOR COLOR SELECTION	--	--
WALLS					
MARK	MATERIAL TYPE	MANUFACTURER	# / COLOR	SIZE	NOTES
BATT	ALUMINUM BATTENS	ALI3	COLOR: MAPLE	SEE NOTES	1 X 1, 1 X 2, 1 X 4 & 1 X 5 - SEE DETAIL X/AX.X
BRICK	BRICK	INTERSTATE BRICK	COLOR: PLATINUM	4 X 4 X 16	EMPEROR
CMU	CONCRETE BLOCK	SUNROC	COLOR: NATURAL GRAY	8 X 8 X 16	--
PTDW-1	PAINTED CMU	SHERWIN WILLIAMS	COLOR: SPARE WHITE (SW 6203)	N/A	--
SHIP	PAINTED SHIPLAP SIDING	JAMES HARDIE / SHERWIN WILLIAMS	COLOR: PORPOISE (SW 7047)	9 IN. EXPOSURE	SHIPLAP SIDING
CEILING					
MARK	MATERIAL TYPE	MANUFACTURER	# / COLOR	SIZE	NOTES
MTL	PRE-FINISHED METAL SOFFIT	SEE SPEC	COLOR: WOOD GRAIN FINISH; MATCH BERRIDGE WALNUT	10.25"	FW-1205 STYLE PANELS
PTDC-1	PAINTED GYPSUM BOARD OVER SHEATHING	SHERWIN WILLIAMS	COLOR: SPARE WHITE (SW 6203)	N/A	--
PTDC-2	PAINTED SHEATHING	SHERWIN WILLIAMS	COLOR: SPARE WHITE (SW 6203)	N/A	--
MILLWORK					
MARK	MATERIAL TYPE	MANUFACTURER	# / COLOR	SIZE	NOTES
CONC	CAST-IN-PLACE CONCRETE	N/A	COLOR: TBD	N/A	PAVILION COUNTERTOP
DOORS, WINDOWS and DOOR TRIM					
MARK	MATERIAL TYPE	MANUFACTURER	# / COLOR	SIZE	NOTES
FR-1	PAINTED HM FRAME	SHERWIN WILLIAMS	COLOR: PORPOISE (SW 7047)	N/A	--
DR-1	PAINTED HM DOOR	SHERWIN WILLIAMS	COLOR: ANONYMOUS (SW 7046)	N/A	--

NOTE: FINISHES SHOWN IN THIS SCHEDULE SHALL BE THE BASIS OF DESIGN. REFER TO THE PROJECT MANUAL FOR OTHER ACCEPTABLE MANUFACTURERS

blu line designs
planning | landscape architecture | design
8719 S. Sandy Parkway
Sandy, UT 84070
p 801.679.3157

CLIENT
FARMINGTON CITY
CONTACT: SYLVIA CLARK
PH: 801.939.9295
EMAIL: SCLARK@FARMINGTON.UTAH.GOV

FARMINGTON
01.01.2011

WPA architecture
WPA Architecture
1535 N FREEDOM BLVD, STE 360
PROVO, UTAH 84604
801.374.0800
info@wpa-architecture.com

IVY ACRES PARK
1397 WEST COOK LANE
FARMINGTON, UTAH

REVISIONS

NO.	symmetry	DESCRIPTION

Stamp



Designed By:	BTF
Drawn By:	RS
Date:	03.06.2024
Checked By:	BTF
Project No:	22-246

Drawing Title
CONSTRUCTION TYPES

Drawing number
A3.1

100 PERCENT SET

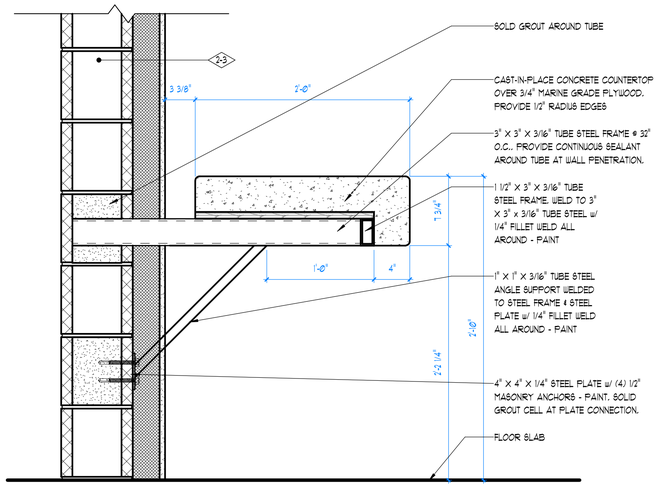

1 VANITY COUNTER DETAIL
1 1/2" = 1'-0"

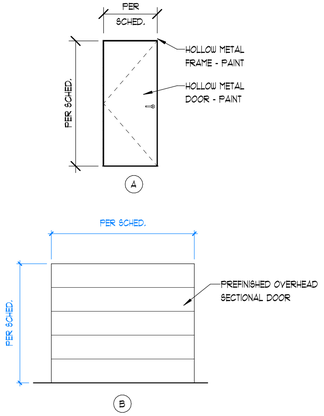

DOOR TYPES

DOOR SCHEDULE

DOOR NUMBER	ROOM NUMBER	ROOM NAME	DOOR TYPE	DOOR SIZE			DETAILS		HW SET	FIRE RATING	COMMENTS
				WIDTH	HEIGHT	THICK	HEAD	JAMB			
102	101	MEN	A	3'-0"	7'-0"	1 3/4"	6/A3.2	5/A3.2	01		
103	103	ACC. TOILET	A	3'-0"	7'-0"	1 3/4"	3/A3.2	2/A3.2	02		
104	104	STALL	A	3'-0"	7'-0"	1 3/4"	3/A3.2	4/A3.2	02		
105	105	UTILITY	A	3'-0"	7'-0"	1 3/4"	3/A3.2	2/A3.2	03		PROVIDE CORROSIVE RESISTANT HARDWARE
106	106	ACC. TOILET	A	3'-0"	7'-0"	1 3/4"	6/A3.2	5/A3.2	04		
107	107	CHEMICAL	A	3'-0"	7'-0"	1 3/4"	6/A3.2	5/A3.2	03		PROVIDE CORROSIVE RESISTANT HARDWARE
108	108	CHEMICAL	A	3'-0"	7'-0"	1 3/4"	6/A3.2	5/A3.2	03		PROVIDE CORROSIVE RESISTANT HARDWARE
109	109	PUMP ROOM	A	3'-0"	7'-0"	1 3/4"	6/A3.2	5/A3.2	03		PROVIDE CORROSIVE RESISTANT HARDWARE
111	111	ACC. TOILET	A	3'-0"	7'-0"	1 3/4"	6/A3.2	5/A3.2	04		
112	112	ACC. TOILET	A	3'-0"	7'-0"	1 3/4"	3/A3.2	2/A3.2	01		
113	113	STALL	A	3'-0"	7'-0"	1 3/4"	3/A3.2	4/A3.2	02		
114	114	STALL	A	3'-0"	7'-0"	1 3/4"	3/A3.2	4/A3.2	02		
115	115	STALL	A	3'-0"	7'-0"	1 3/4"	3/A3.2	4/A3.2	02		
116	116	WOMEN	A	3'-0"	7'-0"	1 3/4"	6/A3.2	5/A3.2	01		
118	100	PAVILION	A	3'-0"	7'-0"	1 3/4"	6/A3.2	5/A3.2	03		
119	100	PAVILION	A	1'-8"	7'-0"	1 3/4"	3/A3.2	4/A3.2, SIM.	03		
120	120	STORAGE	A	3'-0"	7'-0"	1 3/4"	6/A3.2	5/A3.2	03		
MAINTENANCE BUILDING											
00/A	001	MAINTENANCE	A	3'-0"	7'-0"	1 3/4"	6/A3.2 SIM.	5/A3.2 SIM.	03		
00/B	001	MAINTENANCE	B	6'-8"	8'-0"		PER MFR.	PER MFR.			

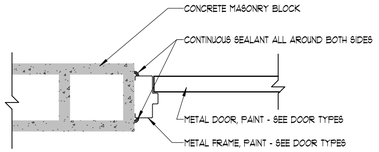

2 JAMB DETAIL
1 1/2" = 1'-0"

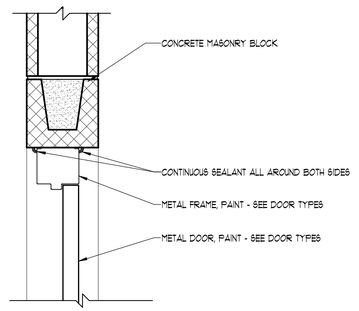

3 HEAD DETAIL
1 1/2" = 1'-0"

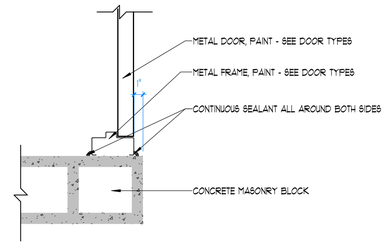

4 JAMB DETAIL
1 1/2" = 1'-0"

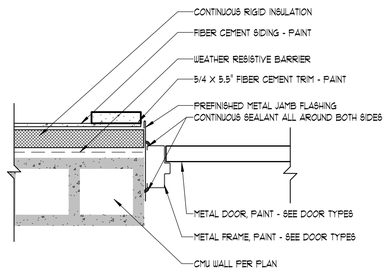

5 JAMB DETAIL
1 1/2" = 1'-0"

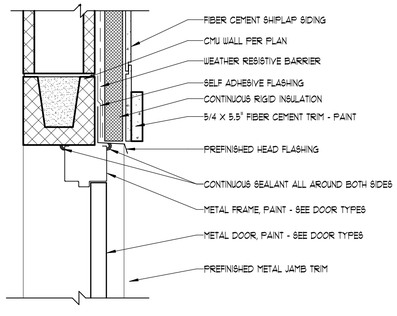

6 HEAD DETAIL
1 1/2" = 1'-0"

DOOR HARDWARE SCHEDULE

GROUP ONE

DOOR(S) 102, 116

QTY.		ITEM	PRODUCT #	FIN	MANUF.
2	EA.	HINGES	5BB1HW 4.5 X 4.5 NRP	630	IVES
1	EA.	ELECTRIC HINGE	5BB1HW 4.5 X 4.5 CON TW12	630	IVES
1	EA.	EU MORTISE LOCK	L9492LEU LON L583-363 RX LX DM CON 12/24 VDC (LOCK WITH NO INDICATOR)	626	SCH
1	EA.	MORTISE CYLINDER	2/86 X 1-1/2 X 6 PIM	626	YALE
1	EA.	SURFACE CLOSER	4041 DEL EDA	689	LCN
1	EA.	KICKPLATE	8400 36" X 2" LDW B-CS	630	IVES
1	EA.	WALL STOP	WS443	626	IVES
1	SET	SEALS	2525B 1T	BLK	NGP
1	EA.	DOOR SWEEP	200NA 36"	CL	NGP
1	EA.	WIRE HARNESS (THRU HINGE)	CON-XX (LENGTH AS REQ'D)		SCH
1	EA.	POWER SUPPLY WIRE HARNESS	CON-6W		SCH
1	EA.	CREDENTIAL READER	BY DIVISION 28		
1	EA.	DOOR POSITION SWITCH	BY DIVISION 28		
1	EA.	POWER SUPPLY	PS902 120/240 VAC		VON

GROUP TWO

DOOR(S) 103, 104, 112, 113, 114, 115

QTY.		ITEM	PRODUCT #	FIN	MANUF.
1	EA.	MORTISE LOCK	LV9486 LON XL13-439	626	SCH
1	EA.	MORTISE CYLINDER	2/86 X 1-1/2 X 6 PIM	626	YALE
3	EA.	HINGES	5BB1 4.5 X 4.5 NRP	626	IVES
1	EA.	OVERHEAD CLOSER	4040XP	689	LCN
1	EA.	WALL STOP	WS443	626	IVES
1	EA.	SET SEALS	700SA	BLK	NGP
1	EA.	KICKPLATE	8400 36" X 2" LDW	630	IVES

GROUP THREE

DOOR(S) 105, 107, 108, 109, 118, 119, 120

QTY.		ITEM	PRODUCT #	FIN	MANUF.
1	EA.	ENTRY LOCKSET	ND53 LON	626	SCH
3	EA.	BB HINGES	5BB1 4.5 X 4.5 NRP	626	IVES
1	EA.	OVERHEAD CLOSER	4040XP	689	LCN
1	EA.	WALL STOP	WS443	626	IVES
1	EA.	SEALS	700SA	BLK	NGP
1	EA.	DOOR SWEEP	200NA 36"	CL	NGP
NOTE: PROVIDE CORRISIVE RESISTANT HARDWARE AT DOORS 105, 107, 108 & 109					

GROUP FOUR

DOOR(S) 106, 111

QTY.		ITEM	PRODUCT #	FIN	MANUF.
2	EA.	HINGES	5BB1HW 4.5 X 4.5 NRP	630	IVES
1	EA.	ELECTRIC HINGE	5BB1HW 4.5 X 4.5 CON TW12	630	IVES
1	EA.	EU MORTISE LOCK	L9492LEU LON L583-363 XL13-346 RX LX DM CON 12/24 VDC (LOCK WITH DOUBLE INDICATOR)	626	SCH
1	EA.	MORTISE CYLINDER	2/86 X 1-1/2 X 6 PIM	626	YALE
1	EA.	SURFACE CLOSER	4041 DEL EDA	689	LCN
1	EA.	KICKPLATE	8400 36" X 2" LDW B-CS	630	IVES
1	EA.	WALL STOP	WS443	626	IVES
1	SET	SEALS	2525B 1T	BLK	NGP
1	EA.	DOOR SWEEP	200NA 36"	CL	NGP
1	EA.	WIRE HARNESS (THRU HINGE)	CON-XX (LENGTH AS REQ'D)		SCH
1	EA.	POWER SUPPLY WIRE HARNESS	CON-6W		SCH
1	EA.	CREDENTIAL READER	BY DIVISION 28		
1	EA.	DOOR POSITION SWITCH	BY DIVISION 28		
1	EA.	POWER SUPPLY	PS902 120/240 VAC		VON

blu line designs
planning | landscape architecture | design
8719 S. Sandy Parkway
Sandy, UT 84070
p 801.679.3157

CLIENT
FARMINGTON CITY
CONTACT: SYLVIA CLARK
PH: 801.939.9295
EMAIL: SCLARK@FARMINGTON.UTAH.GOV

WPA Architecture
1535 N FREEDOM BLVD, STE 360
PROVO, UTAH 84604
801.374.0800
info@wpa-architecture.com

IVY ACRES PARK
1397 WEST COOK LANE
FARMINGTON, UTAH

REVISIONS

NO.	APPROVAL	DESCRIPTION

Stamp



Designed By:	RS
Drawn By:	RS
Date:	03.06.2024
Checked By:	BTF
Project No:	22-246

Drawing Title
DOOR SCHEDULE & DETAILS

Drawing number
A3.2

100 PERCENT SET



1 NORTH ELEVATION COLOR
1/4" = 1'-0"

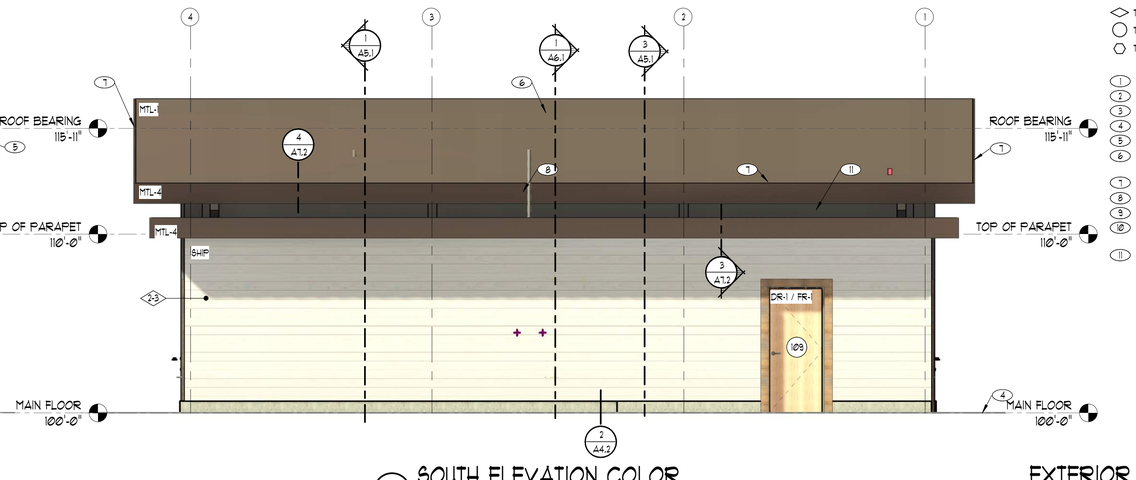

2 SOUTH ELEVATION COLOR
1/4" = 1'-0"



3 EAST ELEVATION COLOR
1/4" = 1'-0"



4 WEST ELEVATION COLOR
1/4" = 1'-0"

SHEET NOTES:

- TYPICAL REFERENCE FOR CONSTRUCTION TYPE - SEE SHEET A3.1
- TYPICAL REFERENCE FOR DOOR TYPE - SEE SHEET A3.2
- TYPICAL REFERENCE FOR WINDOW TYPE - SEE SHEET N/A

1. DRINKING FOUNTAIN - SEE PLUMBING DWGS.
2. 8" EXPOSED CONCRETE FOUNDATION
3. 3'-0" EXPOSED CONCRETE FOUNDATION
4. APPROXIMATE FINISH GRADE - SEE CIVIL DWG'S
5. PREFINISHED METAL SOFFIT OVER 7/16" PLYWOOD BACKING
6. STANDING SEAM METAL ROOF OVER HIGH TEMP. SELF ADHERING UNDERLAYMENT
7. PREFINISHED METAL DRIP EDGE
8. PREFINISHED METAL FASCIA
9. PAINTED C-CHANNEL OPENING FRAME - SEE STRUCT.
10. 4" THICK CAST-IN-PLACE CONCRETE COUNTERTOP W/ BRACKETS @ 32" O.C. MAXIMUM. SEE DETAIL 1/A3.2.
11. LAP SINGLE PLY MEMBRANE UP TO LOW EAVE SOFFIT - END WITH TERMINATION BAR

EXTERIOR FINISH SCHEDULE

MARK:	ITEM DESCRIPTION:	MANUFACTURER:	COLOR/FINISH:
BATT	ALUMINUM BATTENS - SEE SHEET A4.2	AL-13	COLOR: MAPLE
BRICK	4 X 4 X 16 EMPORER BRICK	INTERSTATE BRICK	COLOR: PLATINUM
CMU	8" HONED CMU BLOCK w/ SINGLE SCORE	SUNROC	COLOR: NATURAL GRAY
CONC	EXPOSED ARCHITECTURAL CONCRETE	N/A	COLOR: NATURAL GRAY
DR-1	HOLLOW METAL DOORS	SHERWIN WILLIAMS	COLOR: ANONYMOUS (SW 7046)
FR-1	HOLLOW METAL FRAMES	SHERWIN WILLIAMS	COLOR: PORPOISE (SW 7047)
MTL-1	STANDING SEAM METAL ROOF	COATED METALS GROUP	COLOR: TBD
MTL-2	PAINTED STRUCTURAL COLUMN / BEAM	SHERWIN WILLIAMS	COLOR: TBD
MTL-3	PREFINISHED METAL DRIP EDGE	BERRIDGE	COLOR: MATCH FASCIA
MTL-4	PREFINISHED METAL FASCIA	BERRIDGE	COLOR: TBD
SHIP	FIBER CEMENT LAP SHIP LAP SIDING PROVIDE MITERED EXTERIOR CORNERS	SHERWIN WILLIAMS	COLOR: PORPOISE (SW 7047)

100 PERCENT SET

blu line designs
planning | landscape architecture | design
8719 S. Sandy Parkway
Sandy, UT 84070
p 801.679.3157

CLIENT
FARMINGTON CITY
CONTACT: SYLVIA CLARK
PH: 801.939.9295
EMAIL:
SCLARK@FARMINGTON.UTAH.GOV

FARMINGTON

WPA architecture
WPA Architecture
1535 N FREEDOM BLVD, STE 360
PROVO, UTAH 84604
801.374.0800
info@wpa-architecture.com

IVY ACRES PARK

1397 WEST COOK LANE
FARMINGTON, UTAH

REVISIONS

NO.	APPROVED	DESCRIPTION

Stamp

Designed By: BTF
Drawn By: RS
Date: 03.06.2024
Checked By: BTF
Project No: 22-246

Drawing Title

EXTERIOR ELEVATIONS

Drawing number

A4.1

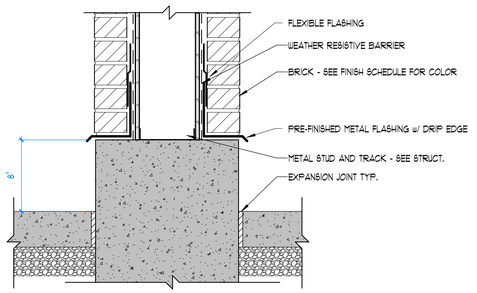

1 BRICK TO FOUNDATION
1 1/2" = 1'-0"

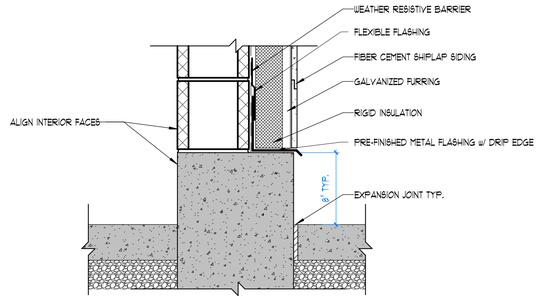

2 SIDING TO FOUNDATION
1 1/2" = 1'-0"

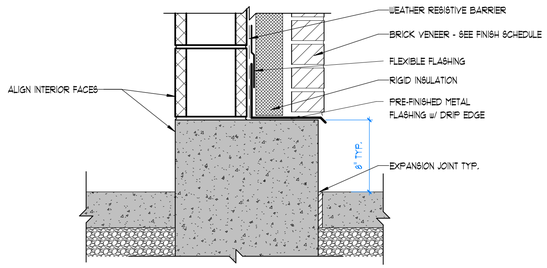

3 BRICK TO FOUNDATION
1 1/2" = 1'-0"

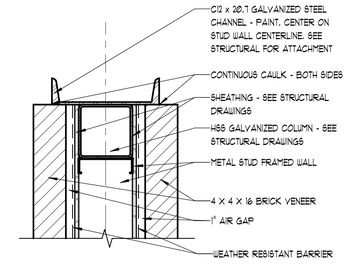

4 CHANNEL @ BRICK PIER
1 1/2" = 1'-0"

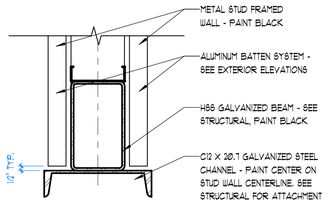

5 CHANNEL @ FRAMED WALL BATTENS - HEAD
1 1/2" = 1'-0"

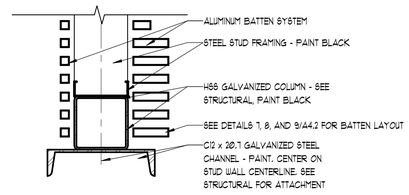

6 CHANNEL @ FRAMED WALL BATTENS - JAMB
1 1/2" = 1'-0"

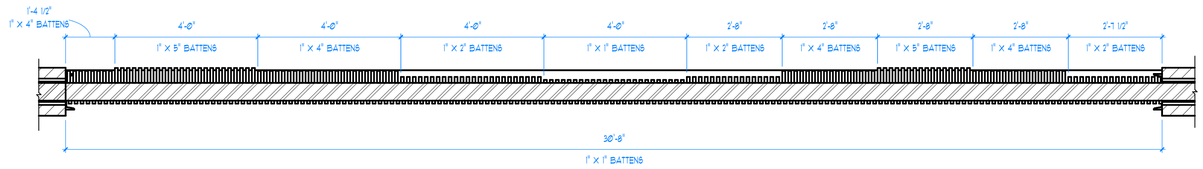

7 NORTH ELEVATION BATTEN PLAN
1/2" = 1'-0"

* GALVANIZED CHANNELS MAY BE SECTIONED TO ALLOW FOR GALVANIZING AND TRANSPORT. FIELD WELD ALL SEAMS.

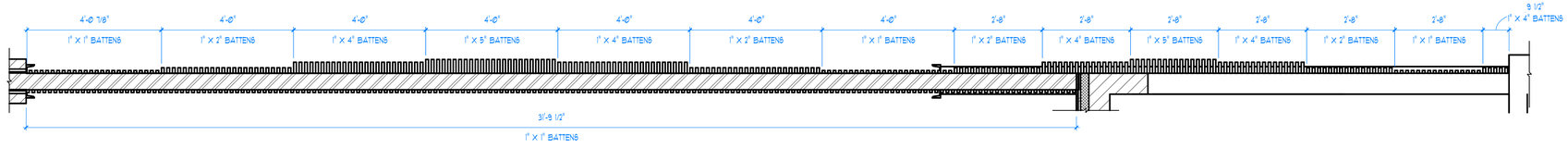

8 EAST ELEVATION BATTEN PLAN
1/2" = 1'-0"

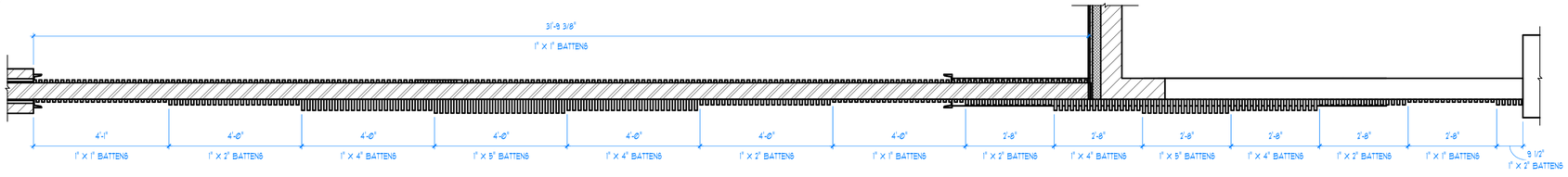

9 WEST ELEVATION BATTEN PLAN
1/2" = 1'-0"

blu line designs
planning | landscape architecture | design
8719 S. Sandy Parkway
Sandy, UT 84070
p 801.679.3157

CLIENT
FARMINGTON CITY
CONTACT: SYLVIA CLARK
PH: 801.939.9295
EMAIL:
SCLARK@FARMINGTON.UTAH.GOV

FARMINGTON

WPA Architecture
1535 N FREEDOM BLVD, STE 360
PROVO, UTAH 84604
801.374.0800
info@wpa-architecture.com

IVY ACRES PARK
1397 WEST COOK LANE
FARMINGTON, UTAH

REVISIONS

NO.	APPROVAL	DESCRIPTION

Stamp



Designed By:	Designer
Drawn By:	Author
Date:	03.06.2024
Checked By:	Checker
Project No:	22-246

Drawing Title

EXTERIOR DETAILS

Drawing number

A4.2

100 PERCENT SET

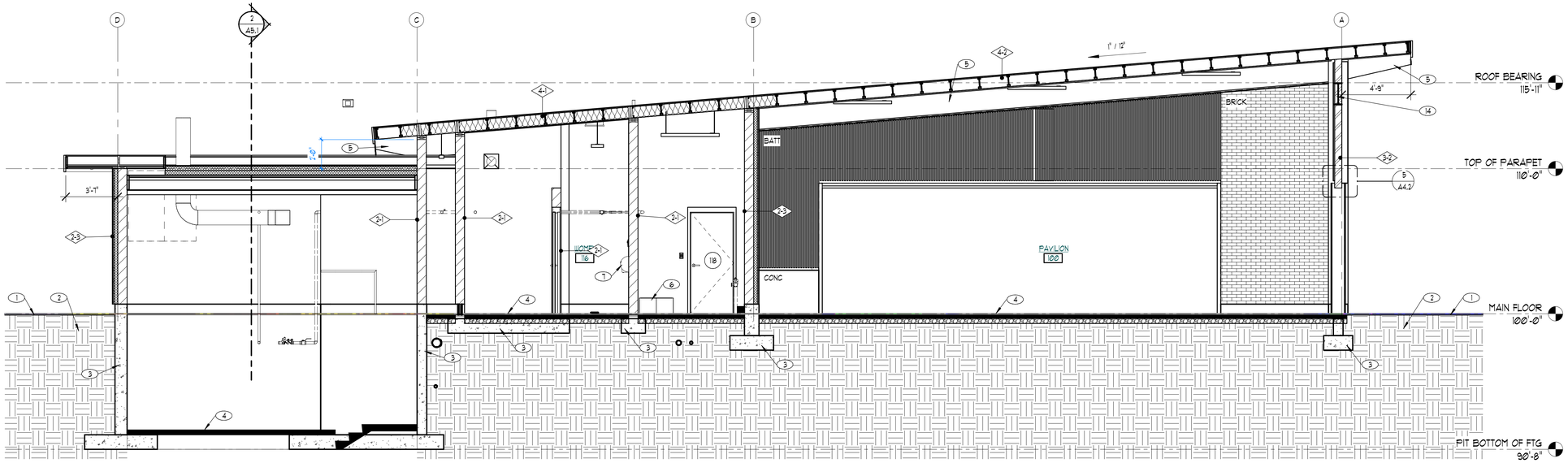

1 BUILDING SECTION

1/4" = 1'-0"

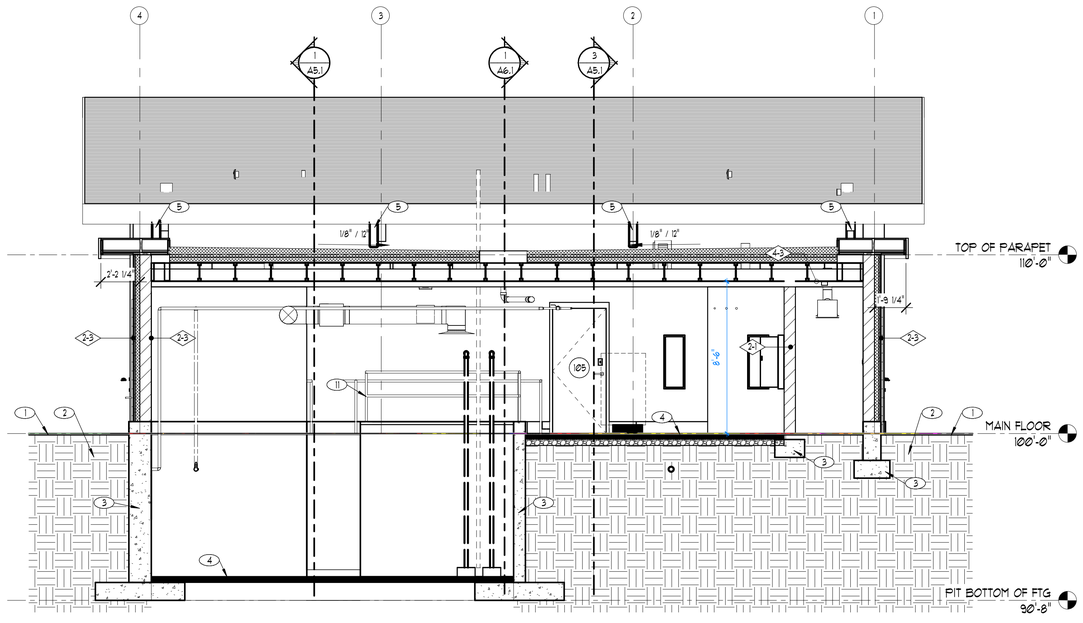

2 BUILDING SECTION

1/4" = 1'-0"

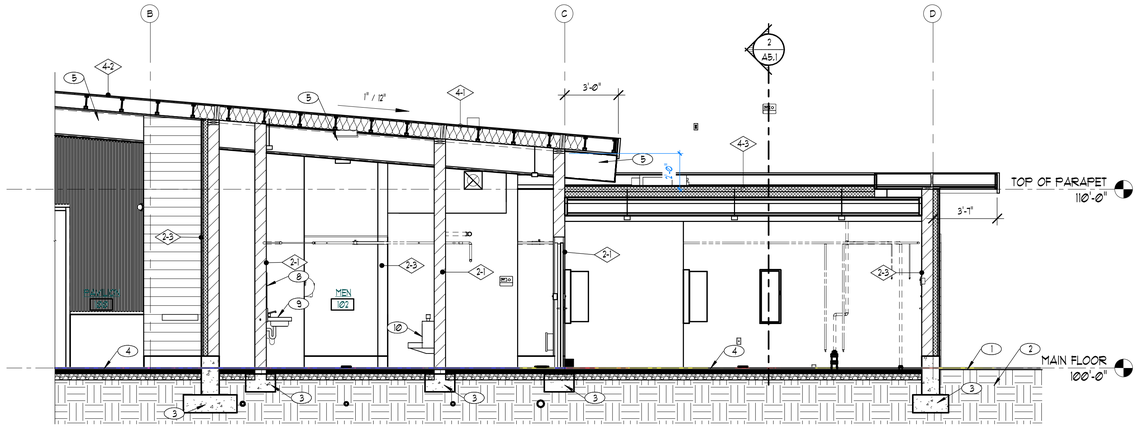

3 BUILDING SECTION

1/4" = 1'-0"

SHEET NOTES:

- TYPICAL REFERENCE FOR CONSTRUCTION TYPE - SEE SHEET A3.1
- TYPICAL REFERENCE FOR DOOR TYPE - SEE SHEET A3.2
- TYPICAL REFERENCE FOR WINDOW TYPE - SEE SHEET N/A

1. APPROXIMATE FINISH GRADE - SEE CIVIL DWG'S
2. SUBGRADE SOILS - SEE CIVIL
3. CAST-IN-PLACE CONCRETE FOOTING & FOUNDATION - SEE STRUCTURAL DRAWINGS
4. CONCRETE SLAB OVER GRAVEL BASE - SEE STRUCT. DWGS.
5. PAINTED STEEL BEAM - SEE STRUCT. DWGS.
6. MOP SINK - SEE PLUMBING DWGS.
7. HAND DRYER - SEE MECH. DWGS.
8. MIRROR - SEE SPECIFICATIONS
9. SINK - SEE PLUMBING DRAWINGS
10. WALL-HUNG URINAL - SEE PLUMBING DRAWINGS
11. 1 1/2" GALVANIZED STEEL GUARDRAIL/HANDRAIL
12. FIBERGLASS PIT COVER
13. 36"X36"X36" PRECAST CONCRETE SUMP PIT WITH FIBERGLASS GRATE - SEE PLUMBING DRAWINGS FOR SUMP PUMP. SLOPE FLOOR OF PUMP PIT TO SLOPE TO SUMP.
14. STRUCTURAL STEEL BEAM - SEE STRUCTURAL DRAWINGS

blu line designs
planning | landscape architecture | design
8719 S. Sandy Parkway
Sandy, UT 84070
p 801.679.3157

CLIENT

FARMINGTON CITY
CONTACT: SYLVIA CLARK
PH: 801.939.9295
EMAIL:
SCLARK@FARMINGTON.UTAH.GOV

FARMINGTON

WPA Architecture
1535 N FREEDOM BLVD, STE 360
PROVO, UTAH 84604
801.374.0800
info@wpa-architecture.com

IVY ACRES PARK

1397 WEST COOK LANE
FARMINGTON, UTAH

REVISIONS

NO.	APPROVAL	DESCRIPTION

Stamp

BRANDON T. FRANCIS
LICENSED ARCHITECT
9403169-0301
03.06.2024
STATE of UTAH

Designed By:	BTF
Drawn By:	RS
Date:	03.06.2024
Checked By:	BTF
Project No:	22-246

Drawing Title

BUILDING SECTIONS

Drawing number

A5.1

100 PERCENT SET

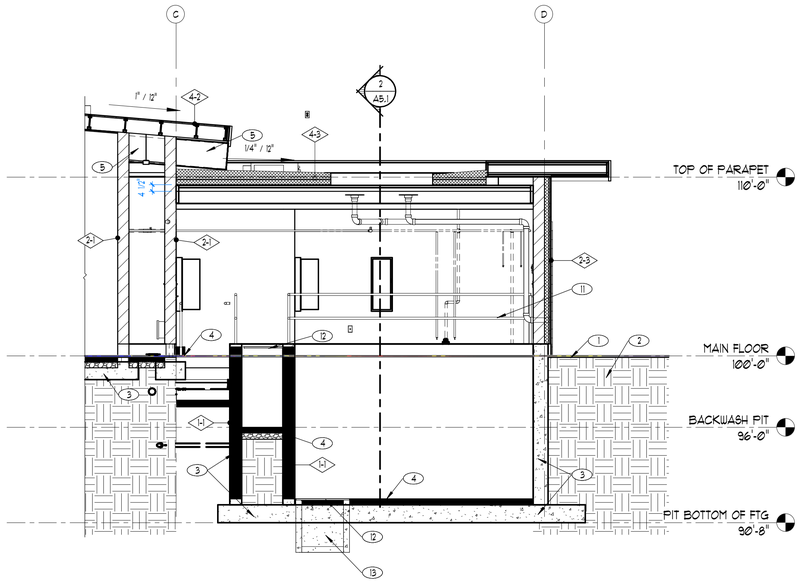

1 PARTIAL SECTION

1/4" = 1'-0"

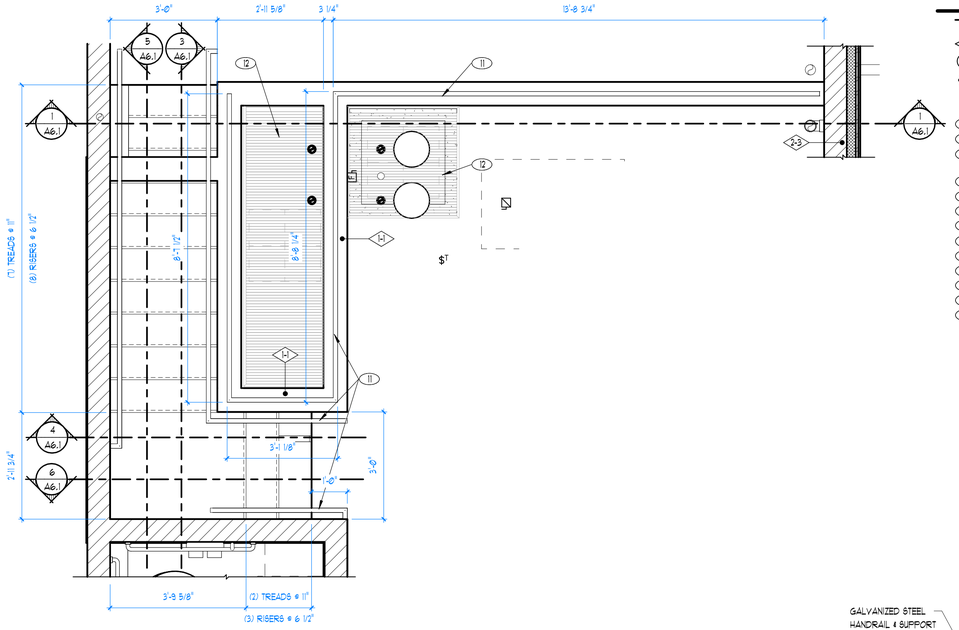

2 ENLARGED STAIR PLAN

1/2" = 1'-0"

SHEET NOTES:

- TYPICAL REFERENCE FOR CONSTRUCTION TYPE - SEE SHEET A3.1
- TYPICAL REFERENCE FOR DOOR TYPE - SEE SHEET A3.2
- TYPICAL REFERENCE FOR WINDOW TYPE - SEE SHEET N/A

1. APPROXIMATE FINISH GRADE - SEE CIVIL DWG'S
2. SUBGRADE SOILS - SEE CIVIL
3. CAST-IN-PLACE CONCRETE FOOTING & FOUNDATION - SEE STRUCTURAL DRAWINGS
4. CONCRETE SLAB OVER GRAVEL BASE - SEE STRUCT. DWGS.
5. PAINTED STEEL BEAM - SEE STRUCT. DWGS.
6. MOP SINK - SEE PLUMBING DWGS.
7. HAND DRYER - SEE MECH. DWGS.
8. MIRROR - SEE SPECIFICATIONS
9. SINK - SEE PLUMBING DRAWINGS
10. WALL-HUNG URINAL - SEE PLUMBING DRAWINGS
11. 1 1/2" GALVANIZED STEEL GUARDRAIL/HANDRAIL
12. FIBERGLASS PIT COVER
13. 36"X36"X36" PRECAST CONCRETE SUMP PIT WITH FIBERGLASS GRATE - SEE PLUMBING DRAWINGS FOR SUMP PUMP. SLOPE FLOOR OF PUMP PIT TO SLOPE TO SUMP.
14. STRUCTURAL STEEL BEAM - SEE STRUCTURAL DRAWINGS

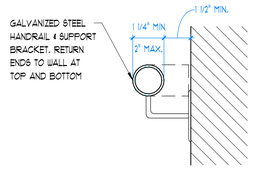

7 HANDRAIL DETAIL

3" = 1'-0"

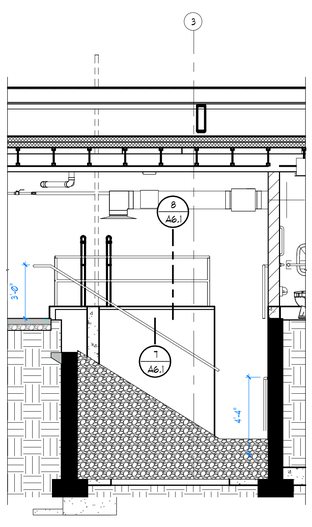

3 STAIR SECTION

1/4" = 1'-0"

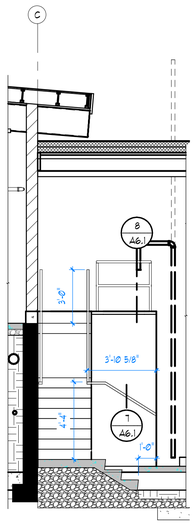

4 STAIR SECTION

1/4" = 1'-0"

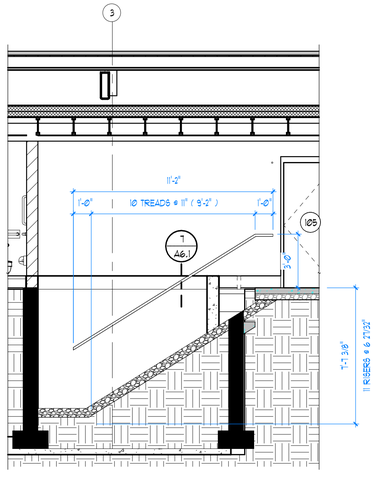

5 STAIR SECTION

1/4" = 1'-0"

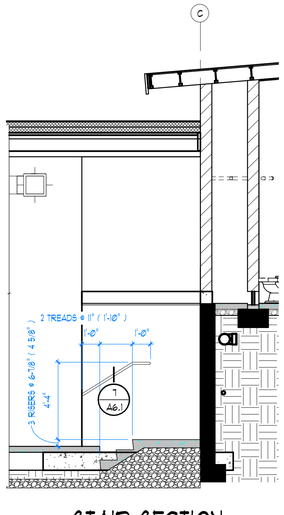

6 STAIR SECTION

1/4" = 1'-0"

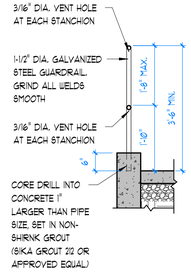

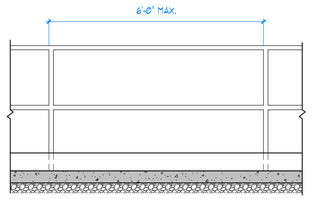

8 GUARDRAIL DETAILS

1/2" = 1'-0"

blu line designs
planning | landscape architecture | design
8719 S. Sandy Parkway
Sandy, UT 84070
p 801.679.3157

CLIENT
FARMINGTON CITY
CONTACT: SYLVIA CLARK
PH: 801.939.9295
EMAIL: SCLARK@FARMINGTON.UTAH.GOV

WPA Architecture
1535 N FREEDOM BLVD, STE 360
PROVO, UTAH 84604
801.374.0800
info@wpa-architecture.com

100 PERCENT SET

IVY ACRES PARK

1397 WEST COOK LANE
FARMINGTON, UTAH

REVISIONS

NO.	APPROVAL	DESCRIPTION

Stamp



Designed By:	Designer
Drawn By:	Author
Date:	03.06.2024
Checked By:	Checker
Project No:	22-246

Drawing Title

LARGE SCALE STAIR PLANS

Drawing number

A6.1

SHEET NOTES:

- TYPICAL REFERENCE FOR CONSTRUCTION TYPE - SEE SHEET A9.1
- TYPICAL REFERENCE FOR DOOR TYPE - SEE SHEET A9.2
- TYPICAL REFERENCE FOR WINDOW TYPE - SEE SHEET N/A

1. SINGLE-PLY MEMBRANE ROOFING
2. STANDING SEAM METAL ROOF OVER HIGH TEMP. SELF ADHERING UNDERLAYMENT
3. PREFINISHED METAL FASCIA
5. ROOF DRAIN AND OVERFLOW
6. ROOFTOP EQUIPMENT - SEE MECHANICAL DRAWINGS
7. LINE OF WALL BELOW

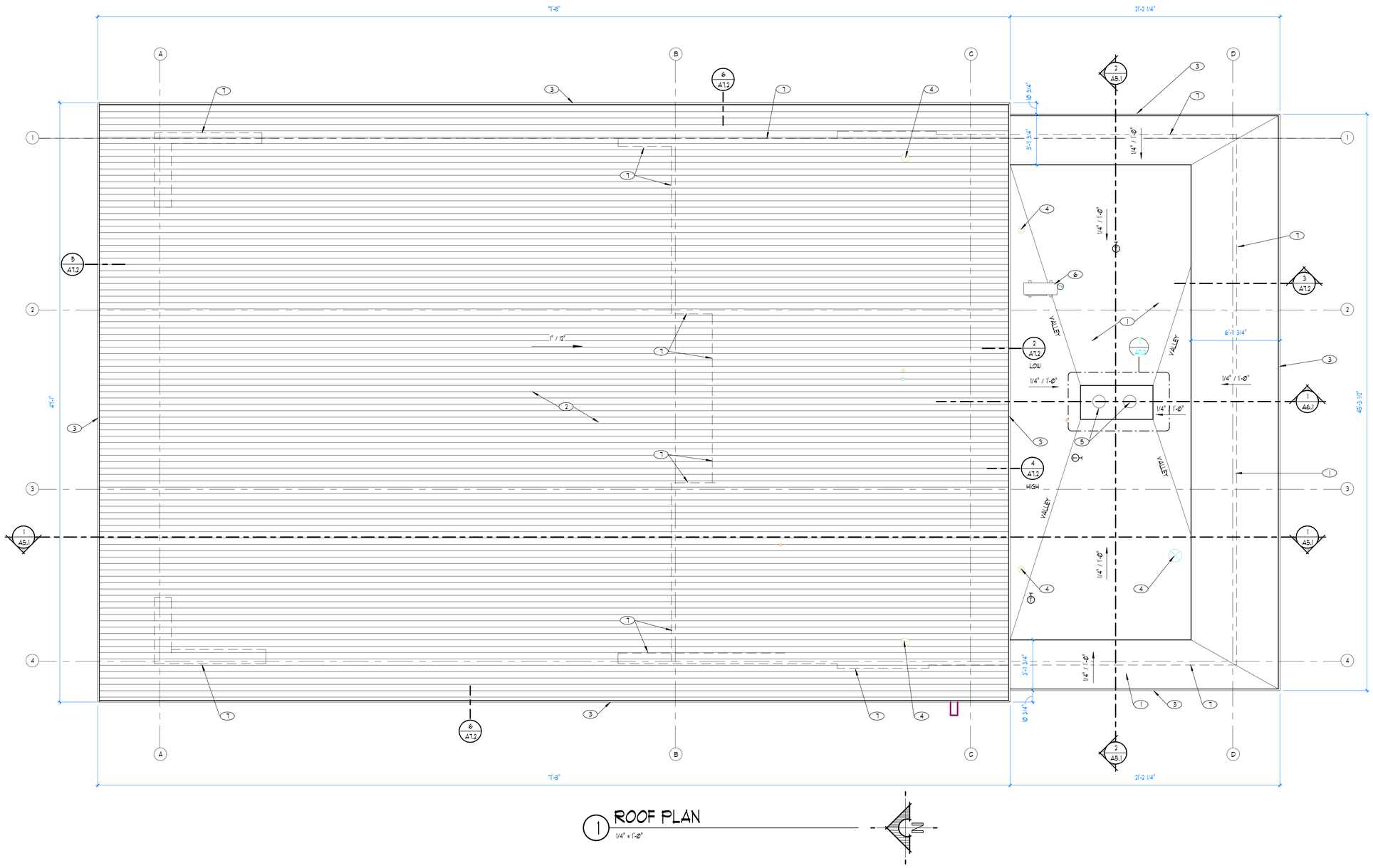

1 ROOF PLAN

1/4" = 1'-0"

blu line designs
planning | landscape architecture | design
8719 S. Sandy Parkway
Sandy, UT 84070
p 801.679.3157

CLIENT

FARMINGTON CITY
CONTACT: SYLVIA CLARK
PH: 801.939.9295
EMAIL:
SCLARK@FARMINGTON.UTAH.GOV

FARMINGTON

WPA Architecture
1535 N FREEDOM BLVD, STE 360
PROVO, UTAH 84604
801.374.0800
info@wpa-architecture.com

100 PERCENT SET

IVY ACRES PARK

1397 WEST COOK LANE
FARMINGTON, UTAH

REVISIONS

No.	symmetry	DESCRIPTION

Stamp



Designed By:	BTF
Drawn By:	RS
Date:	03.06.2024
Checked By:	BTF
Project No:	22-246

Drawing Title

ROOF PLAN

Drawing number

A7.1

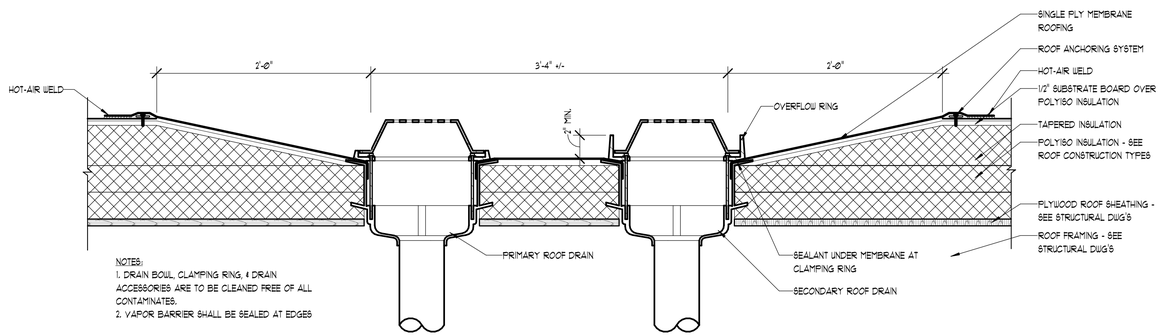

1 ROOF DRAIN DETAIL

1 1/2" = 1'-0"

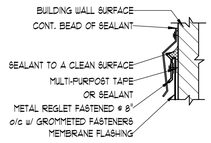

NOTE

1) SEALANT IS A TWO STEP APPLICATION:
   A. BEHIND TOP OF MEMBRANE FLASHING.
   B. TOP OF METAL REGLET.
2) SEALANT SHALL BE APPLIED TO A CLEAN ACCEPTABLE SURFACE. METAL REGLET SHALL BE SECURELY ANCHORED w/ GROMMETED FASTENERS and PROVIDE ADEQUATE COMPRESSION OF MEMBRANE FLASHING and SEALANT.
3) VAPOR BARRIER SHALL BE SEALED AT EDGES.
4) SEAL AROUND ALL PENETRATIONS w/ CAULKING OR EXPANDED FOAM. CAULK AT OPENINGS LESS THAN 1/2", EXPANDED FOAM AT OPENINGS GREATER THAN 1/2".

2 TERMINATION BAR

1 1/2" = 1'-0"

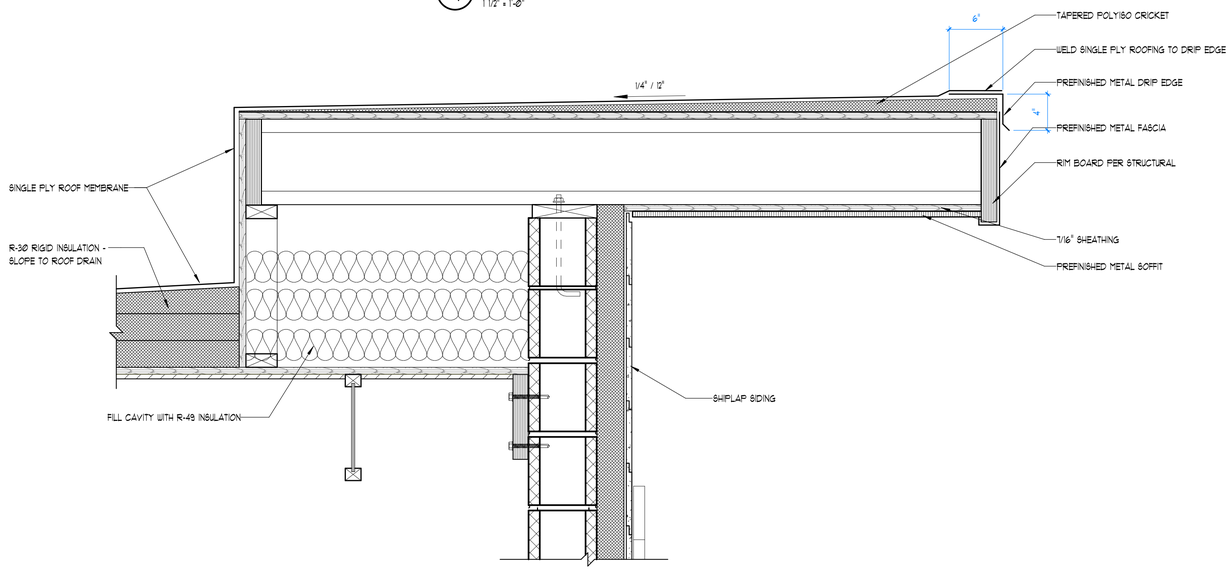

3 LOW ROOF PARAPET

1 1/2" = 1'-0"

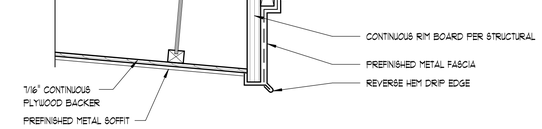

4 FASCIA @ EAVE - LOW

1 1/2" = 1'-0"

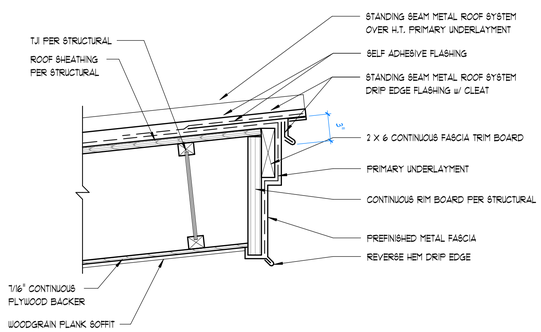

5 FASCIA @ EAVE - HIGH

1 1/2" = 1'-0"

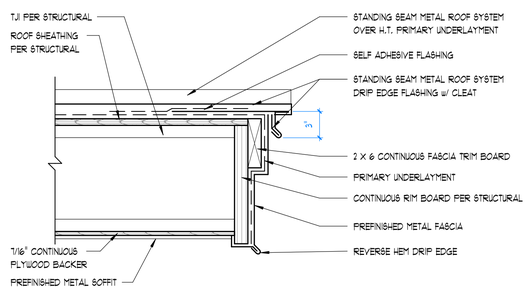

6 FASCIA @ RAKE

1 1/2" = 1'-0"

blu line designs
planning | landscape architecture | design
8719 S. Sandy Parkway
Sandy, UT 84070
p 801.679.3157

CLIENT
FARMINGTON CITY
CONTACT: SYLVIA CLARK
PH: 801.939.9295
EMAIL:
SCLARK@FARMINGTON.UTAH.GOV

WPA Architecture
1535 N FREEDOM BLVD, STE 360
PROVO, UTAH 84604
801.374.0800
info@wpa-architecture.com

IVY ACRES PARK

1397 WEST COOK LANE
FARMINGTON, UTAH

REVISIONS

NO.	APPROVED	DESCRIPTION

Stamp



Designed By:	Designer
Drawn By:	Author
Date:	03.06.2024
Checked By:	Checker
Project No:	22-246

Drawing Title

ROOF DETAILS

Drawing number

A7.2

100 PERCENT SET

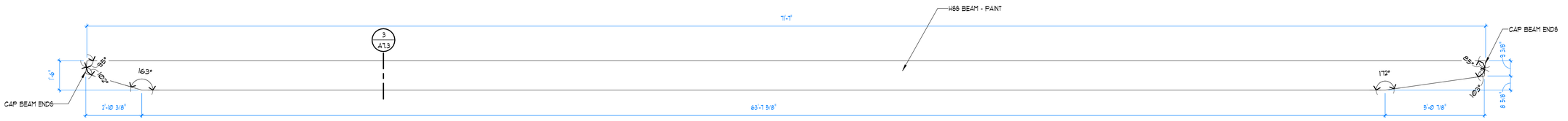

1 ROOF BEAM 1 @ GRIDLINES 1 & 4

3/8" = 1'-0"

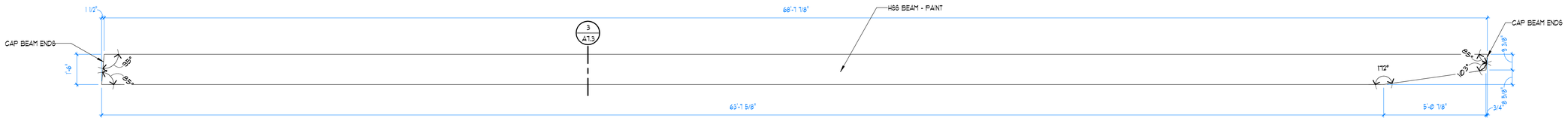

2 ROOF BEAM 2 @ GRIDLINES 2 & 3

3/8" = 1'-0"

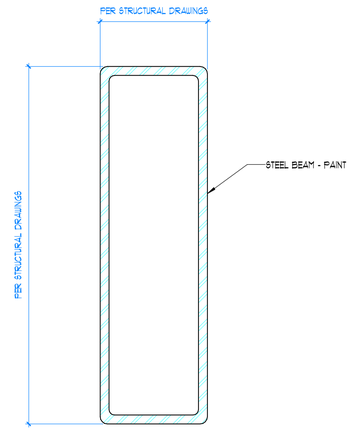

3 STEEL ROOF BEAM SECTION

3" = 1'-0"

100 PERCENT SET

blu line designs
planning | landscape architecture | design

8719 S. Sandy Parkway
Sandy, UT 84070
p 801.679.3157

CLIENT

FARMINGTON CITY
CONTACT: SYLVIA CLARK
PH: 801.939.9295
EMAIL:
SCLARK@FARMINGTON.UTAH.GOV

FARMINGTON

WPA Architecture
1535 N FREEDOM BLVD, STE 360
PROVO, UTAH 84604
801.374.0800
info@wpa-architecture.com

IVY ACRES PARK

1397 WEST COOK LANE
FARMINGTON, UTAH

REVISIONS

NO.	APPROVED	DESCRIPTION

Stamp



Designed By:	Designer
Drawn By:	Author
Date:	03.06.2024
Checked By:	Checker
Project No:	22-246

Drawing Title

ROOF DETAILS

Drawing number

A7.3

CEILING LEGEND

- GYPSUM BOARD OVER 3/4" PLYWOOD
- PRE-FINISHED METAL SOFFIT WITH WOODGRAIN FINISH
- PAINTED 3/4" PLYWOOD
- 2x2 LAY-IN LIGHT
- RECESSED CAN LIGHT
- RETURN VENT
- SUPPLY VENT

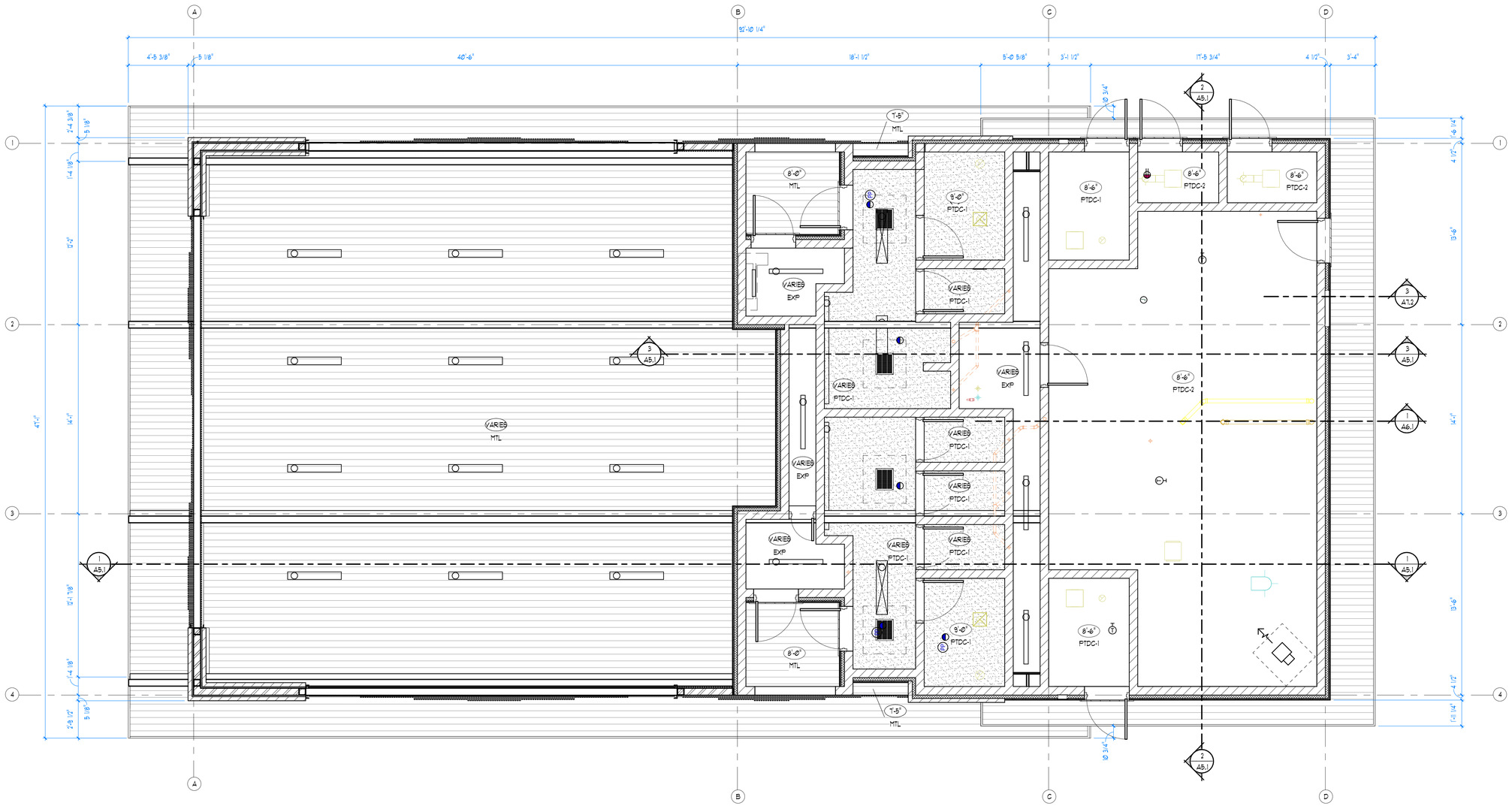

1 REFLECTED CEILING PLAN
1/4" = 1'-0"

100 PERCENT SET

blu line designs
planning | landscape architecture | design
8719 S. Sandy Parkway
Sandy, UT 84070
p 801.679.3157

CLIENT

FARMINGTON CITY
CONTACT: SYLVIA CLARK
PH: 801.939.9295
EMAIL:
SCLARK@FARMINGTON.UTAH.GOV

FARMINGTON

WPA Architecture
1535 N FREEDOM BLVD, STE 360
PROVO, UTAH 84604
801.374.0800
info@wpa-architecture.com

IVY ACRES PARK

1397 WEST COOK LANE
FARMINGTON, UTAH

REVISIONS

NO.	APPROVED	DESCRIPTION

Stamp



Designed By:	BTF
Drawn By:	RS
Date:	03.06.2024
Checked By:	BTF
Project No:	22-246

Drawing Title

REFLECTED CEILING PLAN

Drawing number

A8.1

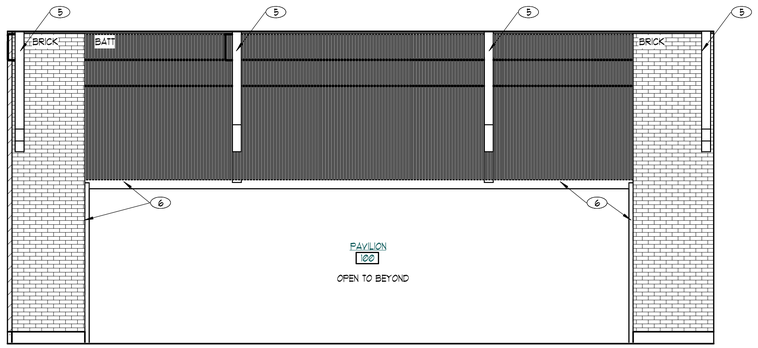

NORTH

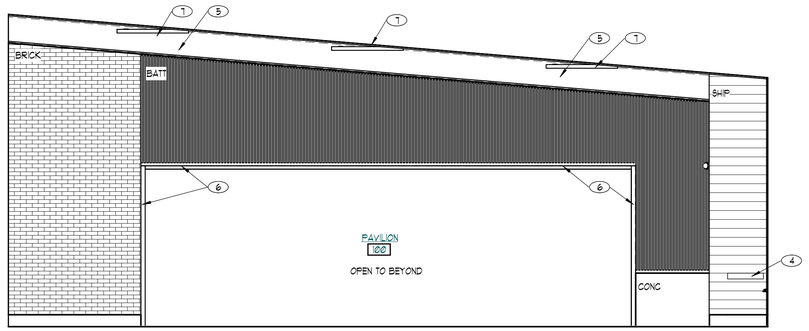

EAST

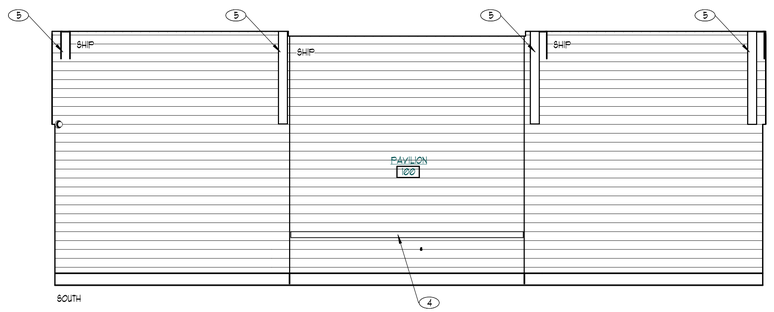

SOUTH

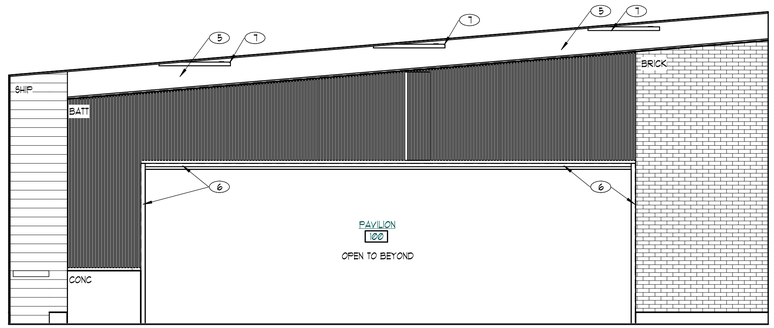

WEST

1 PAVILION (100)

1/4" = 1'-0"

ACCESSORY ABBREVIATIONS

GB18	18" VERTICAL GRAB BAR (CFCI)
GB36	36" GRAB BAR (CFCI)
GB42	42" GRAB BAR (CFCI)
TP	TOILET PAPER DISPENSER (CFCI)
ND	SANITARY NAPKIN DISPOSAL (CFCI)
SD	SOAP DISPENSER (CFCI)
PT	PAPER TOWEL DISPENSER (CFCI)
HD	HAND DRYER (CFCI)
ACS	ADULT CHANGING STATION (CFCI)
DCS	DIAPER CHANGING STATION (CFCI)
MIRR	24"X36" MIRROR (CFCI)

DEFINITIONS:

CFCI	CONTRACTOR FURNISHED, CONTRACTOR INSTALLED
OFCI	OWNER FURNISHED, OWNER INSTALLED

SHEET NOTES:

- TYPICAL REFERENCE FOR CONSTRUCTION TYPE - SEE SHEET A3.1
- TYPICAL REFERENCE FOR DOOR TYPE - SEE SHEET A3.3
- TYPICAL REFERENCE FOR WINDOW TYPE - SEE SHEET N/A

1. WATER CLOSET - SEE PLUMBING DRAWINGS
2. WALL HUNG LAVATORY - SEE PLUMBING DRAWINGS
3. WALL-HUNG URINAL - SEE PLUMBING DRAWINGS
4. 4" THICK CAST-IN-PLACE CONCRETE COUNTERTOP W/ BRACKETS @ 32" O.C. MAXIMUM. SEE DETAIL 7/A3.2.
5. STRUCTURAL HSS BEAM - PAINT. SEE STRUCTURAL DRAWINGS.
6. STEEL CHANNEL TRIM - PAINT. SEE DETAIL 6/A3.2.
7. LIGHT FIXTURE - SEE ELECTRICAL DRAWINGS
8. 1 x 4 WOOD TRIM - PAINT

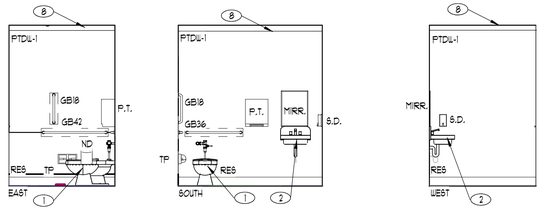

2 ACC. TOILET 103

1/4" = 1'-0"

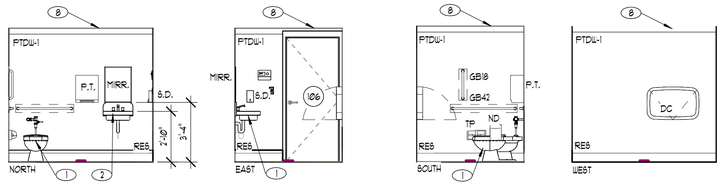

3 ACC. TOILET 106

1/4" = 1'-0"

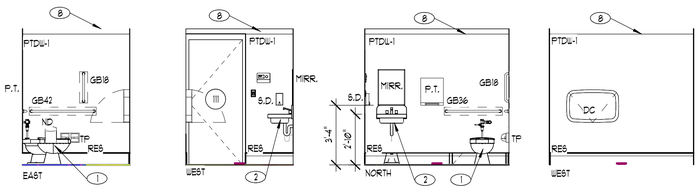

5 ACC. TOILET 111

1/4" = 1'-0"

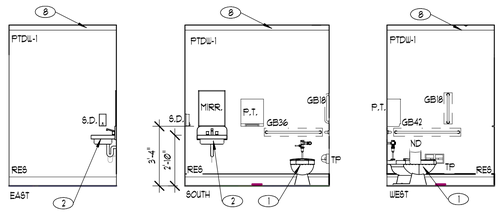

6 ACC. TOILET 112

1/4" = 1'-0"

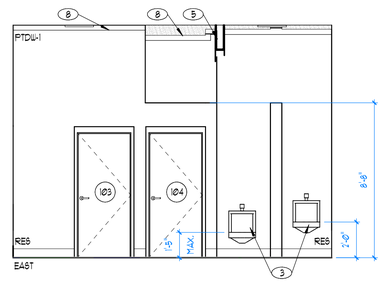

4 MEN'S R.R. 102

1/4" = 1'-0"

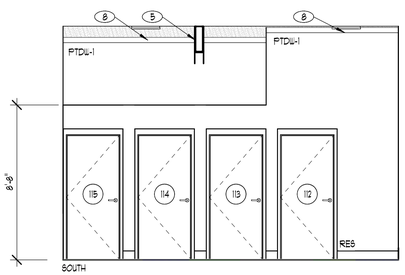

7 WOMEN'S R.R. 116

1/4" = 1'-0"

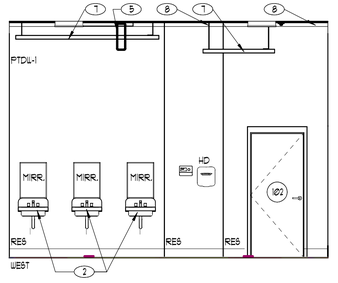

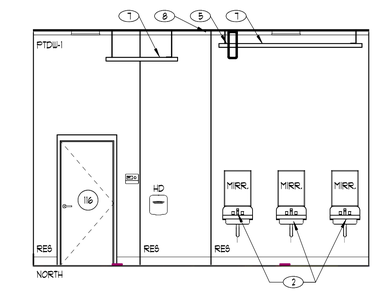

blu line designs
planning | landscape architecture | design
8719 S. Sandy Parkway
Sandy, UT 84070
p 801.679.3157

CLIENT
FARMINGTON CITY
CONTACT: SYLVIA CLARK
PH: 801.939.9295
EMAIL:
SCLARK@FARMINGTON.UTAH.GOV

WPA Architecture
1535 N FREEDOM BLVD, STE 360
PROVO, UTAH 84604
801.374.0800
info@wpa-architecture.com

IVY ACRES PARK

1397 WEST COOK LANE
FARMINGTON, UTAH

REVISIONS

NO.	APPROVAL	DESCRIPTION

Stamp

BRIAN T. FRANDSEN
LICENSED ARCHITECT
6403169-6301
03.06.2024
STATE OF UTAH

Designed By:	BTF
Drawn By:	EB
Date:	03.06.2024
Checked By:	BTF
Project No:	22-246

Drawing Title

LARGE SCALE FLOOR PLAN & INT. ELEVATIONS

100 PERCENT SET

A9.1

GENERAL STRUCTURAL NOTES

1. IN ALL CASES, "CONTRACTOR" SHALL REFER TO THE CONTRACTOR OR SUB-CONTRACTOR RESPONSIBLE FOR THE TRADE SPECIFICALLY REFERRED TO IN THE NOTES (i.e. STEEL, CONCRETE, MASONRY). THE "CONTRACTOR" SHALL MEET ALL NOTE REQUIREMENTS AND SHALL INCLUDE THE COSTS ASSOCIATED WITH THESE REQUIREMENTS IN HIS/HER BID. THE GENERAL CONTRACTOR, OR CONSTRUCTION MANAGER, IS ULTIMATELY RESPONSIBLE FOR COMPLIANCE WITH ALL NOTE REQUIREMENTS.
2. THE CONTRACTOR SHALL PERFORM HIS/HER TRADE AND DUTIES IN A MANNER CONFORMING TO THE PROCEDURES AND REQUIREMENTS AS STATED IN THE 2021 INTERNATIONAL BUILDING CODE (IBC), AND/OR LATEST CODE ADOPTED BY THE LOCAL BUILDING OFFICIAL, AND ALL LOCAL ORDINANCES.
3. THE GENERAL CONTRACTOR, OR PROJECT MANAGER, SHALL COORDINATE THE WORK PERFORMED BY ALL TRADES.
4. THE CONTRACTOR SHALL NOTIFY THE ENGINEER AND/OR ARCHITECT OF ANY DISCREPANCIES, OMISSIONS OR CONFLICTS BETWEEN THE VARIOUS ELEMENTS OF THE WORKING DRAWINGS AND/OR THE SPECIFICATIONS BEFORE PROCEEDING WITH ANY WORK INVOLVED. IN ALL CASES, UNLESS OTHERWISE DIRECTED, THE MOST STRINGENT REQUIREMENTS SHALL GOVERN AND BE PERFORMED.
5. THE CONTRACTOR SHALL VERIFY ALL CONDITIONS, DIMENSIONS, SLOPES AND ELEVATIONS, ETC.. AT THE JOB SITE AND SHALL COORDINATE THESE WITH THE ARCHITECT AND WITH ALL TRADES. CONSTRUCTION DRAWINGS SHALL NOT BE SCALED FOR DIMENSIONS.
6. VISITS TO THE JOB SITE BY REPRESENTATIVES OF THE ENGINEER DO NOT CONSTITUTE APPROVAL OF THE WORK PERFORMED BY THE CONTRACTOR OR HIS SUBCONTRACTORS; THEY ARE MERELY FOR THE PURPOSE OF OBSERVATION.
7. SHOP DRAWINGS FOR ANY FABRICATED COMPONENTS OR COMPONENTS DESIGNED-BY-MANUFACTURER SHALL BE APPROVED BY THE ENGINEER AND ARCHITECT PRIOR TO FABRICATION AND ERECTION. SHOP DRAWINGS SHALL BE STAMPED BY A PROFESSIONAL ENGINEER REGISTERED IN THE SAME STATE AS THE PROJECT.
8. THE CONTRACTOR SHALL VERIFY SIZES, LOCATIONS, LOADS, AND EQUIPMENT ANCHORAGE IN THE FIELD WITH THE EQUIPMENT MANUFACTURER (OR SUPPLIER) PRIOR TO FABRICATION OR INSTALLATION OF SUPPORTING STRUCTURES.
9. TEMPORARY SHORING (BRACING) SHALL BE PROVIDED WHERE NECESSARY. SHORING SHALL SUPPORT ALL LOADS TO WHICH THE STRUCTURE MAY BE SUBJECTED (i.e. WIND). SHORING SHALL REMAIN IN PLACE AS LONG AS MAY BE REQUIRED FOR SAFETY OR UNTIL ALL THE STRUCTURAL ELEMENTS ARE COMPLETED. ALL SHORING IS THE RESPONSIBILITY OF THE CONTRACTOR
10. DURING AND AFTER CONSTRUCTION, THE CONTRACTOR AND OWNER SHALL KEEP LOADS ON THE STRUCTURE WITHIN THE LIMITS OF THE DESIGN LOADS FOR THE OCCUPANCY. SEE STRUCTURAL PLANS AND CALCULATIONS FOR STRUCTURAL DESIGN LOADINGS AND CRITERIA.
11. ANY SPECIAL INSPECTION REQUIRED BY THE CONSTRUCTION DOCUMENTS, OR BY THE BUILDING OFFICIAL, OR BY THE IBC, IS THE RESPONSIBILITY OF THE CONTRACTOR TO COORDINATE ON BEHALF OF THE OWNER.
12. CONTRACTOR SHALL BE RESPONSIBLE FOR SAFETY AND PROTECTION WITHIN AND ADJACENT TO THE JOB SITE.
13. PRIOR APPROVAL, IN WRITING, FROM THE ENGINEER IS REQUIRED FOR ANY DEVIATION FROM THE STRUCTURAL PLANS AND/OR CONSTRUCTION DOCUMENTS. OPTIONAL MEMBER SIZES AND VARIATIONS IN THE FRAMING REQUIRE PRIOR APPROVAL OF THE ENGINEER, ARCHITECT AND OWNER. FAILURE TO FOLLOW PLANS AND CONSTRUCTION DOCUMENTS CONSTITUTES CHANGE IN PROJECT SCOPE.
14. SEE STRUCTURAL PLANS FOR ADDITIONAL STRUCTURAL NOTES AND REQUIREMENTS.
15. THE ENGINEER RESERVES THE RIGHT TO REQUEST REPLACEMENT OF ANY PORTION OF THE STRUCTURE DEVIATING FROM THE PLANS WHERE WRITTEN PRIOR APPROVAL HAS NOT BEEN OBTAINED AND WHERE INSPECTION BY THE ENGINEER PRIOR TO CONSTRUCTION OF THE CHANGED PORTION HAS NOT HAPPENED.
16. ALL SITE WORK, GRADING, COMPACTION AND BACKFILL, ETC. SHALL BE DONE IN COMPLIANCE WITH A GEOTECHNICAL REPORT SPECIFIC TO THE SITE. IT IS THE GENERAL CONTRACTORS RESPONSIBILITY TO OBTAIN A GEOTECHNICAL REPORT, IF ONE HAS NOT ALREADY BEEN OBTAINED, AND SUBMIT A COPY TO THE ENGINEER FOR VERIFICATION.
17. ALL ANCHORING ADHESIVE SHALL BE SIMPSON SET-3G EPOXY OR HILTI HY-200V3 ADHESIVE. ANCHORS SHALL BE INSTALLED PER MANUFACTURERS INSTRUCTIONS. EPOXIED ANCHORS SHALL NOT BE INSTALLED IN CONCRETE LESS THAN 21 DAYS OLD
18. ALL NON-EPOXIED POST-INSTALLED ANCHORS TO BE SIMPSON STRONG-BOLT 2 WEDGE ANCHORS, TITEN HD SCREW ANCHORS, HILTI KWIK HUS-EZ SCREW ANCHORS, OR HILTI KWIK BOLT TZ2 ANCHORS. MECHANICAL ANCHORS SHALL NOT BE INSTALLED IN CONCRETE LESS THAN 7 DAYS OLD.
19. FASTENERS AND ANCHOR BOLTS USED IN PRESERVATIVE-TREATED WOOD SHALL BE HOT DIPPED ZINC-COATED GALVANIZED STEEL. THE COATING WEIGHTS SHALL BE IN ACCORDANCE WITH ASTM A 153.

GENERAL CONCRETE NOTES

1. SEE GENERAL STRUCTURAL NOTES FOR ADDITIONAL REQUIREMENTS.
2. ALL WORK SHALL BE IN STRICT ACCORDANCE WITH THE 2021 IBC, ACI 318, AND LOCAL ORDINANCES.
3. CONTRACTOR SHALL VERIFY ALL CONDITIONS AND DIMENSIONS PRIOR TO PLACING CONCRETE.
4. CONTRACTOR SHALL COORDINATE WITH MECHANICAL, ELECTRICAL, AND ARCHITECTURAL PRIOR TO PLACING CONCRETE. PROVIDE SLEEVES, BLOCK OUTS, ETC... AS REQUIRED.
5. CONTRACTOR SHALL BE RESPONSIBLE FOR PROPER PLACEMENT OF ALL ANCHOR BOLTS, SEISMIC ANCHORS OR STRAPS, ETC.. INSTALL PER MANUFACTURER'S SPECIFICATIONS.
6. THE CONTRACTOR IS RESPONSIBLE FOR PROVIDING ALL FORM WORK, POUR STOPS, ETC. REQ'D TO CONSTRUCT ALL CONCRETE WORK. SUCH FORM WORK IS NOT NECESSARILY SHOWN ON THE STRUCTURAL PLANS OR DETAILS. THE CONTRACTOR SHALL SPECIFY ALL FORM WORK AND SHALL INCLUDE THE COST FOR SUCH IN HIS/HER ORIGINAL BID.
7. CONTRACTOR SHALL PROVIDE ALL SHORING AS REQUIRED.
8. SEE FOUNDATION PLAN FOR ADDITIONAL NOTES AND REQUIREMENTS.

CONCRETE & REINFORCEMENT

9. ALL CONCRETE SHALL HAVE A MINIMUM COMPRESSIVE STRENGTH OF 4,000 PSI IN 28 DAYS UNLESS NOTED OTHERWISE. FOOTINGS MAY HAVE A MINIMUM COMPRESSIVE STRENGTH OF 3,000 PSI.
10. SEE PROJECT SPECIFICATIONS FOR CONCRETE DESIGN REQUIREMENTS.
11. ALL REINFORCING STEEL SHALL BE DEFORMED BARS CONFORMING TO THE STANDARD SPECIFICATIONS ASTM A615 GRADE 60. REINFORCING STEEL SHALL BE PROPERLY TIED INTO PLACE PRIOR TO PLACING CONCRETE.
12. ALL REINFORCING STEEL SHALL BE DETAILED AND PLACED IN ACCORDANCE WITH THE ACI DETAILING MANUAL AND ACI STANDARDS (LATEST EDITION).
13. ALL SPLICES IN CONTINUOUS CONCRETE REINFORCING BARS SHALL LAP A MINIMUM OF 40 BAR DIAMETERS. ALL SPLICES SHALL BE MADE IN A COMPRESSION ZONE UNLESS NOTED. ALL CONTINUOUS REINFORCING SHALL TERMINATE WITH A 90 DEG. BEND OR WITH SEPARATE CORNER BARS.

CONCRETE & REINFORCEMENT

14. SEE FOUNDATION WALL SCHEDULE, OR FOUNDATION PLAN, FOR SPECIFICATION OF FOUNDATION WALL REINFORCEMENT. SEE RETAINING WALL SCHEDULE, OR FOUNDATION PLAN, FOR SPECIFICATION OF RETAINING WALL REINFORCEMENT.
15. BRACE WALLS AS REQUIRED UNTIL FLOOR SLABS AND/OR FLOOR FRAMING ARE IN PLACE, AND UNTIL WALLS HAVE PROPERLY CURED.
16. FOUNDATION WALLS HAVE BEEN DESIGNED USING AN EQUIVALENT FLUID PRESSURE. A GEOTECHNICAL REPORT SHALL BE PROVIDED TO THE ENGINEER TO VERIFY PRESSURES USED FOR DESIGN. SEE STRUCTURAL PLANS AND CALCULATIONS FOR ACTUAL FLUID PRESSURE USED.
17. BACKFILL ADJACENT TO FOUNDATION WALLS OR IN LANDSCAPED AREAS SHALL BE PLACED IN LOOSE LIFTS A MAXIMUM OF EIGHT INCHES (8"). FILL SHALL HAVE A MOISTURE CONTENT WITHIN 2% OF OPTIMUM AND SHALL BE COMPACTED TO AT LEAST 90% MAXIMUM DENSITY (ASTM D 1557). HEAVY EQUIPMENT SHALL NOT BE USED TO BACKFILL WITHOUT PRIOR CONSENT OF THE ENGINEER.
18. CONTRACTOR SHALL PROVIDE DRAINAGE BEHIND ALL FOUNDATION AND RETAINING WALLS. CONTRACTOR SHALL RETAIN CONSULTANTS AS NECESSARY TO ACCOMPLISH THIS WORK.
19. CONSTRUCTION JOINTS (COLD JOINTS) IN WALLS SHALL BE WATERPROOFED TO PREVENT LEAKS.
20. WHERE WALLS OR FOOTINGS SUPPORT MASONRY, PROVIDE MATCHING DOWELS OF SAME SIZE AND SPACING AS VERTICAL WALL STEEL.
21. THE CONTRACTOR SHALL COORDINATE STEPS IN WALLS WITH THE ARCHITECT, AND SHALL VERIFY WITH THE ENGINEER.

SLABS

22. REINFORCE ALL SLABS ON GRADE w/ № 4 BARS AT 18" O.C. EACH WAY.
23. RECESS FOUNDATION AND POUR SLABS THROUGH, TYPICAL AT ALL EXTERIOR DOORS AND STORE FRONT TYPE WINDOWS. SEE FOUNDATION DETAILS.
24. DEPRESS SLABS AS REQUIRED IN AREAS OF CERAMIC TILE, SPECIAL ENTRY MATS, HARDWOOD FLOORS, ETC. COORDINATE LOCATION AND DEPTH WITH THE ARCHITECT.
25. PROVIDE ISOLATION JOINTS AROUND COLUMNS/SPREAD FOOTINGS, AND CONTROL JOINTS AS REQUIRED, PARTICULARLY WHERE SLABS TRANSITION IN SIZE.
26. THE CONTRACTOR SHALL TAKE CARE THAT HEAVY EQUIPMENT, AND AREAS USED FOR STAGING, DOES NOT CRACK AND DAMAGE SLABS ON GRADE. DAMAGED SLABS SHALL BE REPAIRED OR REPLACED AT NO ADDITIONAL EXPENSE TO THE OWNER.
27. REFER TO THE CIVIL PLANS FOR SPECIFICATION OF ALL EXTERIOR FLAT WORK.

FOOTINGS

28. SEE FOOTING SCHEDULE FOR FOOTING SIZES AND REINFORCING REQUIREMENTS.
29. FOOTINGS HAVE BEEN DESIGNED USING AN ALLOWABLE BEARING PRESSURE. A GEOTECHNICAL REPORT SHALL BE PROVIDED TO THE ENGINEER TO VERIFY PRESSURES USED FOR DESIGN. SEE STRUCTURAL PLANS AND CALCULATIONS FOR ACTUAL BEARING PRESSURE USED.
30. ALL EXTERIOR FOOTINGS SHALL BEAR BELOW FROST DEPTH. CONTRACTOR TO VERIFY.
31. THE CONTRACTOR SHALL COORDINATE STEPS IN FOOTINGS WITH THE ARCHITECT, AND SHALL VERIFY WITH THE ENGINEER.

STRUCTURAL FILL

32. STRUCTURAL FILL SHALL BE SPECIFIED AND APPROVED BY THE SOILS ENGINEER OF RECORD, BY WAY OF A GEOTECHNICAL REPORT, AS BEING APPROPRIATE FOR THE APPLICATION. STRUCTURAL FILL SHALL BE PROVIDED IN THE BUILDING PAD AND PAVEMENT AREAS AS NECESSARY.
33. STRUCTURAL FILL SHOULD BE PLACED IN LOOSE LIFTS A MAXIMUM OF EIGHT INCHES (8"). FILL SHALL HAVE A MOISTURE CONTENT WITHIN 2% OF OPTIMUM AND SHALL BE COMPACTED TO AT LEAST 95% MAXIMUM DENSITY (ASTM D 1557).
34. FOOTINGS SHALL BE SUPPORTED ON UNDISTURBED NATIVE SOILS OR 24" MINIMUM OF PROPERLY PLACED AND COMPACTED STRUCTURAL FILL. ALL STRUCTURAL FILL SHALL EXTEND 12" MIN. BEYOND EDGES OF FOOTINGS. SEE SITE PLAN FOR ADDITIONAL FILL REQUIRED TO RAISE THE BUILDING PAD TO REQUIRED ELEVATIONS.
35. SLABS ON GRADE SHALL BE SUPPORTED ON UNDISTURBED NATIVE SOILS OR 12" MINIMUM OF PROPERLY PLACED AND COMPACTED STRUCTURAL FILL. SLABS ON GRADE SHALL ALSO BE CONSTRUCTED OVER 4" FREE DRAINING BASE PLACED OVER THE STRUCTURAL FILL.
36. CONTRACTOR SHALL EMPLOY THE GEOTECHNICAL ENGINEER TO OBSERVE AND APPROVE THE EXCAVATION PRIOR TO PLACING STRUCTURAL FILL OR FORMING FOOTINGS.

CONCRETE EXPOSURE CLASS			
ELEMENT	EXP. CLASS	% AIR	MIN. W/C
FOOTINGS	F1, S0, W0, C1	6	.055
WALLS	F1, S0, W0, C1	6	.045
SLAB ON GRADE	F0, S0, W0, C0	NA	.045

GENERAL STEEL NOTES

1. SEE GENERAL STRUCTURAL NOTES FOR ADDITIONAL REQUIREMENTS.
2. ALL WORK TO BE IN STRICT ACCORDANCE WITH THE 2021 IBC, AISC, AND LOCAL ORDINANCES.
3. ALL DIMENSIONS AND CONDITIONS SHALL BE VERIFIED BY THE CONTRACTOR PRIOR TO FABRICATION AND ERECTION.
4. SEE SPECIFICATIONS FOR ADDITIONAL INFORMATION AND REQUIREMENTS.
5. SEE ARCHITECTURAL SHEETS FOR ADDITIONAL DIMENSIONS.
6. SEE ARCHITECTURAL FOR ACCESS HATCHES, DRAFT STOPS, ETC.
7. SUBMIT SHOP DRAWINGS OF ALL STRUCTURAL STEEL, STEEL JOISTS, STEEL DECKING & MISCELLANEOUS STEEL TO ENGINEER FOR APPROVAL PRIOR TO FABRICATION.
8. SEE FRAMING PLANS FOR ADDITIONAL NOTES AND REQUIREMENTS.

STRUCTURAL STEEL

9. ALL WIDE FLANGE MEMBERS TO BE MANUFACTURED UNDER ASTM A992.
10. ALL STRUCTURAL PLATES, CHANNELS & ANGLES TO BE MANUFACTURED UNDER ASTM A36.
11. ALL HSS MEMBERS TO BE MANUFACTURED UNDER ASTM A500 GRADE C.
12. ALL PIPE COLUMNS TO BE MANUFACTURED UNDER ASTM A500 GRADE C.
13. ALL BOLTS FOR STEEL TO STEEL CONNECTIONS TO BE 3/4" DIA. MIN. A325-N HIGH STRENGTH BOLTS, UNLESS NOTED OTHERWISE. BOLTS EMBEDDED IN CONCRETE OR MASONRY SHALL BE F1554 GRADE 36 UNLESS NOTED OTHERWISE.
14. ALL WELDS AND BOLTING TO MEET APPROVAL OF SPECIAL INSPECTOR AS REQUIRED BY BUILDING OFFICIAL.
15. ALL STEEL SHALL BE PROPERLY PRIMED EXCEPT AREAS THAT REQUIRE FIELD WELDING (i.e. TOP OF BEAMS).
16. ANY BEARING PLATES NOT DETAILED SHALL BE; SAME THICKNESS AS FLANGE OF MEMBER, WIDTH SHALL BE WIDTH OF MEMBER PLUS 4" AND DEPTH SHALL BE 6" MIN. BEARING PLATES TO HAVE (2) 3/4"dia NELSON STUDS MIN.
17. STEEL DETAILER SHALL PROVIDE STANDARD STAIR DETAILING INCORPORATING C12 x 20.7 STRINGERS OR APPROVED EQUAL. SUBMIT SHOP DRAWINGS FOR APPROVAL PRIOR TO FABRICATION.
18. SEE ARCHITECTURAL, MECHANICAL & ELECTRICAL FOR ADDITIONAL STEEL MEMBERS (BRACKETS, ANGLES, ETC...) REQUIRED.
19. STEEL MEMBERS SHALL NOT BE CUT, DRILLED OR TORCHED FOR PIPES, ETC. UNLESS SPECIFICALLY DETAILED.
20. ANY MODIFICATION OF STRUCTURAL MEMBERS NOT SPECIFICALLY DETAILED ON THE STRUCTURAL PLANS IS NOT PERMITTED WITHOUT PRIOR APPROVAL.
21. ANY CONNECTIONS NOT DETAILED ON STRUCTURAL PLANS SHALL BE PROVIDED BY THE STEEL DETAILER. SHOP DRAWINGS FOR ALL FABRICATED STEEL CONNECTIONS SHALL BE SUBMITTED FOR REVIEW AND APPROVAL PRIOR TO FABRICATION AND INSTALLATION.

LIGHT GAUGE METAL FRAMING NOTES:

1. ALL PRODUCTS, DETAILING, FABRICATION AND INSTALLATION SHALL MEET THE REQUIREMENTS OF AISI "SPECIFICATIONS FOR THE DESIGN OF COLD FORMED STEEL STRUCTURAL MEMBERS", AND THE 2021 INTERNATIONAL BUILDING CODE.
2. ALL STEEL STUDS SHALL BE THE TYPE, SIZE AND GAUGE SHOWN ON THE PLANS.
3. ALL LIGHT GAUGE STEEL, STUDS, JOISTS, TRACKS AND COMPONENTS SHALL BE FORMED FROM ZINC COATED (G60 GALVANIZED) STEEL MEETING THE REQUIREMENTS OF ASTMA-653.

GAUGE:	GRADE:
97 MIL , 68 MIL , 54 MIL	Fy (MIN) 50 KSI
43 MIL , 33 MIL	Fy (MIN) 33 KSI

NOTE: GRADE 50 STEEL TO CONFORM TO ASTM A570 REQUIREMENTS.
GRADE 33 STEEL TO CONFORM TO ASTM 611 GRADE C REQUIREMENTS.

4. ALL STUDS, TRACK and ACCESSORIES SHALL BE GALVINIZED or PRIMED w/ RUST-INHIBITIVE PAINT, MEETING THE PERFORMANCE REQUIREMENTS OF TT-P-636C.
5. THE PHYSICAL AND STRUCTURAL PROPERTIES LISTED BY AISI SHALL BE CONSIDERED THE MINIMUM FOR ALL FRAMING MEMBERS.
6. ALL FRAMING COMPONENTS SHALL BE CUT SQUARELY FOR ATTACHMENT TO PERPENDICULAR MEMBERS, OR AS REQUIRED FOR AN ANGULAR FIT AGAINST ABUTTING MEMBERS. MEMBERS SHALL BE HELD POSITIVELY IN PLACE UNTIL PROPERLY FASTENED.
7. AXIALLY LOADED STUDS SHALL BE INSTALLED IN A MANNER WHICH WILL ASSURE THAT ENDS OF THE STUDS ARE POSITIONED AGAINST THE INSIDE TRACK WEB, PRIOR TO STUD AND TRACK ATTACHMENT.
8. TRACKS SHALL BE SECURELY ANCHORED TO CONCRETE SUPPORTING STRUCTURE w/ HILTI XU 0.158 DIA x 11/2" P.A.F. w/ STEEL WASHER AT 16" O.C. COMPLETE UNIFORM AND LEVEL BEARING SUPPORT SHALL BE PROVIDED FOR THE BOTTOM TRACK. ALL OTHER TYPES OF CONNECTIONS SEE PLANS.
9. AT TRACK BUTT JOINTS, ABUTTING PIECES OF TRACK SHALL BE SECURELY ANCHORED TO A COMMON STRUCTURAL ELEMENT, OR THEY SHALL BE BUTT WELDED OR SPLICED TOGETHER.
10. TEMPORARILY BRACING SHALL BE PROVIDED UNTIL ERECTION IS COMPLETED.
11. WALL STUD BRIDGING SHALL BE INSTALLED IN A MANNER TO PROVIDE RESISTANCE TO BOTH MINOR AXIS BENDING AND ROTATION BRIDGING ROWS SHALL BE EQUALLY SPACED NOT TO EXCEED 6'-0" ON CENTER SPACING, UNLESS CONTINUOUS SHEATHING IS PRESENT ON BOTH SIDES OF STUDS FROM TRACK TO SUPPORTS.
12. ALL CONNECTORS SHALL BE FIELD SCREWED USING #8 - #16 SELF TAPPING SCREWS, OR SHOP WELDED. USE (2) SCREWS MINIMUM FOR EACH CONNECTION. ALL WELDING SHALL CONFORM TO AWS D1.3.
13. ALL SCREWS SHALL HAVE AN EDGE DISTANCE OF 1/2" (MIN) U.N.O. AND SHALL BE SPACED MIN. OF (4) SCREW DIAMETERS.
14. TORCH CUTTING OF MEMBERS OR HOLES IS NOT PERMITTED.
15. CONTRACTOR MAY SUBSTITUTE MEMBERS OF GREATER STRENGTH THAN SHOWN SUBJECT TO APPROVAL FROM ENGINEER OF RECORD. ALTERNATE CONNECTIONS MAY BE USED UPON REVIEW AND APPROVAL OF ENGINEER.
16. ALL EXTERIOR WALLS TO BE FRAMED w/ 600S162-54 STUDS AT 16" O.C. PROVIDE INDUSTRY STANDARD CONNECTIONS AND FRAMING. PROVIDE 6" STANDARD BOX BEAM OVER ALL WINDOWS (U. N. O). SPLICES IN AXIALLY LOADED STUDS SHALL NOT BE PERMITTED.
17. PROVIDE SLIP TRACK TYPE CONNECTION ON UNDERSIDE OF ALL STEEL BEAMS.
18. ALL LIGHTWEIGHT STEEL FRAMING SHALL CONFORM TO ASTM A446.
19. CONTRACTOR SHALL PROVIDE ALL ACCESSORIES INCLUDING BUT NOT LIMITED TO TRACKS, SLIPS, WEB STIFFENERS, ANCHORS AND FASTENING DEVISES TO COMPLETE A PROPER INSTALLATION AS RECOMMENDED BY THE MANUFACTURER.

GENERAL MASONRY NOTES

1. SEE GENERAL STRUCTURAL NOTES FOR ADDITIONAL REQUIREMENTS.
2. ALL WORK SHALL BE IN STRICT ACCORDANCE WITH THE 2021 INTERNATIONAL BUILDING CODE, CURRENT ACI 530, AND LOCAL ORDINANCES.
3. CONTRACTOR SHALL BE RESPONSIBLE FOR ALL SHORING AND BRACING AS REQUIRED.
4. COORDINATE WITH ARCHITECTURAL DRAWINGS FOR WALL TYPES AND LOCATIONS.
5. SEE FRAMING PLANS FOR ADDITIONAL NOTES AND REQUIREMENTS.

WALLS & REINFORCEMENT

6. CONCRETE MASONRY UNIT (CMU) TO HAVE f'm = 1500 PSI MIN. AND MEET APPROVAL OF OWNER, ARCHITECT AND PROJECT SPECIFICATIONS.
7. REINFORCE MASONRY IN BOTH DIRECTIONS. GROUT FULL ALL BLOCK CELLS WITH REINFORCING. ALIGN CELLS TO PRESERVE UNOBSTRUCTED VERTICAL CELLS OF 2" X 3" MINIMUM. GROUT IN 4 FOOT LIFTS MAXIMUM WITHOUT PRIOR APPROVAL.
8. REINFORCE WALLS AS PER THE PROVIDED MASONRY WALL SCHEDULE.
9. ALL REINFORCING STEEL TO BE GRADE 60. REINFORCING TO CONFORM TO ASTM A615 OR A706. FOR WELDING REBAR USE GRADE 60W OR A706.
10. DOWEL REINFORCING IN COLUMNS AND WALLS INTO THE FOOTING OR STRUCTURE BELOW WITH REBAR OF THE SAME SIZE AND SPACING AS REQUIRED ABOVE. PROVIDE 40 BAR DIAMETERS FOR SPLICE INTO CONCRETE AND 50 BAR DIAMETERS INTO MASONRY.
11. CONTRACTOR SHALL BE RESPONSIBLE FOR ACTUAL LAYOUT AND PLACEMENT OF REINFORCING STEEL. COORDINATE WITH MASONRY MANUFACTURER / SUPPLIER AS REQ'D.
12. ALL NON-BEARING PARTITION WALLS SHALL EXTEND TO THE ROOF DECK AS PER STRUCTURAL PLANS, OR SHALL HAVE BRACING PROVIDED PER THE STRUCTURAL MASONRY DETAILS.

LINTELS

13. ALL STANDARD WALL REINFORCING SHALL CONTINUE THROUGH THE LINTEL SECTION.
14. ALL HORIZONTAL REINFORCING IN HEADERS AND LINTELS SHALL EXTEND 24" MIN. BEYOND EDGE OF OPENING, INTO SUPPORT. IF HORIZONTAL REINFORCING CAN NOT EXTEND 24" BEYOND EDGE OF OPENING, PROVIDE STANDARD 90 deg. HOOK AT ENDS.
15. ALL LINTELS, AND 24" MIN. OF ADJACENT WALLS, SHALL BE GROUTED SOLID.
16. DO NOT LAP BOTTOM STEEL AT CENTER SPAN, NOT TOP STEEL NEAR INTERIOR OR EXTERIOR SUPPORTS, TYPICAL ALL BEAMS AND LINTELS. ALL LAPS SHALL BE MADE IN THE SECTION OF THE WALL, AND NOT IN THE LINTEL.
17. USE "U" BLOCK SAME THICKNESS AS THE WALL, AS THE BOTTOM BLOCK OF THE LINTEL.
18. PENETRATIONS THROUGH LINTELS FOR MECHANICAL, ELECTRICAL SYSTEMS, ETC. ARE NOT PERMITTED WITHOUT APPROVAL OF THE ENGINEER.

EMBED BOLTS & PLATES

19. MASON TO INSTALL EMBED ANCHOR BOLTS, EMBED PLATES, BEARING PLATES, ETC, AS REQUIRED (TO BE FURNISHED BY STRUCTURAL STEEL SUPPLIER) COORDINATE WITH GENERAL CONTRACTOR.
20. ALL EMBEDDED OR POST INSTALLED ANCHORS TO HAVE A MINIMUM OF 3" GROUT COVER.

DESIGN CRITERIA

1. GOVERNING BUILDING CODE: 2021 INTERNATIONAL BUILDING CODE (IBC)
3. ROOF LIVE LOADING:
   a. ROOF LIVE LOAD . . . . . 20 PSF
   b. ROOF SNOW LOAD . . . . . 30 PSF
      1. GROUND SNOW LOAD, P_G . . . . . 43 PSF
      2. SNOW EXPOSURE FACTOR, C_E 1.0
      3. IMPORTANCE FACTOR, I_S 1.0
      3. THERMAL FACTOR, C_T 1.0
5. ROOF DEAD LOADS: . . . . . 15 PSF
6. EARTHQUAKE:
   a. RISK CATEGORY II
   b. SEISMIC DESIGN CATEGORY . . . . . D
   c. SPECTRAL RESPONSE ACCELERATIONS:
      S_S = 1.45g
      S_{DS} = 1.02g
      S_1 = 0.53g
      S_{D1} = 0.73g
   d. SOIL SITE CLASS: . . . . . D (ASSUMED
      F_A = 1.0
      F_V = 1.3
   e. IMPORTANCE FACTOR, I_E 1.0
   f. DESIGN BASE SHEAR . . . . . 25 K
   g. SEISMIC RESPONSE COEFFICIENT, C_S 0.204
   h. ANALYSIS PROCEDURE . . . . . EQUIV. LATERAL FORCE
   i. BASIC SEISMIC FORCE RESISTING SYSTEM . . . . . SPECIAL MASONRY SHEARWALLS WOOD SHEARWALLS
   j. RESPONSE MODIFICATION FACTOR, R . . . . . 5.0 / 6.0
7. WIND:
   a. BASIC WIND SPEED (3 SECOND GUST) . . . . . 140 MPH (ULTIMATE)
   b. EXPOSURE . . . . . 90 MPH (NOMINAL)
   c. INTERNAL PRESSURE COEFFICIANT, GC P_I 0.18
   d. COMPONENTS AND CLADDING PRESSURE . . . . . VARIES
8. FOUNDATION:
   a. SOILS REPORT BY . . . . . DATED. . . . . .
   b. SOIL BEARING PRESSURE . . . . . 1,500 PSF (ASSUMED)
   c. LATERAL SOIL PRESSURE FLUID EQUIVALENT DENSITY
      1. ACTIVE . . . . . 45 PCF (RETAINING WALLS)
      2. AT REST . . . . . 60 PCF (FOUNDATION WALLS)
      3. PASSIVE . . . . . 100 PCF
      4. INCREASE FOR SEISMIC . . . . . 165 PCF
   d. COEFFICIENT OF FRICTION 0.45

GENERAL WOOD FRAMING NOTES

1. SEE GENERAL STRUCTURAL NOTES FOR ADDITIONAL REQUIREMENTS.
2. ALL WORK TO BE IN STRICT ACCORDANCE WITH THE 2021 IBC, AISC, AND LOCAL ORDINANCES.

DIMENSIONAL LUMBER

3. DIMENSIONAL LUMBER USED AS STRUCTURAL FRAMING (i.e. JOISTS, RAFTERS, HEADERS) SHALL BE DOUGLAS FIR-LARCH № 2 OR EQUAL.

ENGINEERED LUMBER

4. GLU-LAMINATED BEAMS FOR SIMPLE SPANS SHALL BE 24F-V4 DF/DF. GLU-LAMINATED BEAMS FOR CONTINUOUS SPANS AND CANTILEVERS SHALL BE 24F-V8 DF/DF. DO NOT INSTALL GLU-LAMINATED BEAMS UPSIDE DOWN. USE EXTERIOR GRADE GLU-LAMS FOR LACATIONS OUTSIDE BUILDING.
5. LAMINATED VENEER LUMBER AND THE LIKE SHALL BE INSTALLED PER MANUFACTURERS RECOMMENDATIONS AND SPECIFICATIONS. LVL BEAMS SHALL BE BUILT UP w/ 1 3/4" MEMBERS. SEE FRAMING PLANS FOR NUMBER OF MEMBERS REQUIRED.
6. I-JOISTS SHALL BE TJI OR EQUIVALENT, AND SHALL BE INSTALLED PER MANUFACTURERS RECOMMENDATIONS AND SPECIFICATIONS.
7. ENGINEERED LUMBER, WITH THE EXCEPTION OF EXTERIOR GRADE GLU-LAMINATED LUMBER, SHALL NOT BE USED IN EXTERIOR APPLICATIONS.
8. USE PRESSURE TREATED LUMBER FOR ALL WOOD IN CONTACT WITH CONCRETE OR MASONRY IN CONTACT WITH EARTH (i.e. MUD SILL). IN SOME SITUATIONS, 26 GAUGE GALVANIZED SHEET METAL MAY BE PROVIDED AS AN APPROVED MOISTURE BARRIER. SEE ENGINEER FOR APPROVAL OF THIS OPTION.

BLOCKING, BRIDGING & MISCELLANEOUS

9. DIMENSIONAL JOISTS AND RAFTERS SHALL HAVE FULL-HEIGHT SOLID BLOCKING AT THEIR BEARING POINTS. EACH RAFTER AND/OR ROOF TRUSS SHALL BE ANCHORED WITH SIMPSON H1 ANCHORS AT EACH END.
10. I-JOISTS AND RAFTERS SHALL HAVE FULL-HEIGHT SOLID BLOCKING AT THEIR BEARING POINTS.
11. WOOD MEMBERS SHALL NOT BE CUT FOR PIPES, ETC. UNLESS SPECIFICALLY DETAILED.
12. BIRDS MOUTHS AND/OR NOTCHING OF STRUCTURAL MEMBERS NOT SPECIFICALLY DETAILED ON THE STRUCTURAL PLANS IS NOT PERMITTED WITHOUT PRIOR APPROVAL.

FLOOR, ROOF & WALL SHEATHING

13. ALL ROOF SHEATHING SHALL BE 7/16" APA EXP. 1 RATED SHEATHING OR EQUAL WITH 8d COMMON NAILS AT 6" O.C. PERIMETER, 6" O.C. PANEL EDGES AND AT 12" O.C. IN THE FIELD. PANEL EDGES ARE UNBLOCKED UNLESS NOTED OTHERWISE ON THE STRUCTURAL PLANS.
14. ALL EXTERIOR WALLS SHALL BE SHEATHED WITH 7/16" APA EXP. 1 RATED SHEATHING OR EQUAL WITH 8d COMMON NAILS AT 6" O.C. EDGES AND AT 12" O.C. IN THE FIELD - FLAT BLOCKED AT ALL PANEL EDGES, UNLESS NOTED OTHERWISE IN SHEAR WALL SCHEDULE.

STRUCTURAL CONNECTIONS

15. THE CONTRACTOR IS ULTIMATELY RESPONSIBLE TO PROVIDE ADEQUATE STRUCTURAL CONNECTIONS. CONNECTIONS MUST CARRY THE BEARING CAPACITY OF THE MEMBER AND ANY UPLIFT OR SEISMIC FORCES GENERATED IN THE MEMBER. SPECIAL CONSIDERATION SHALL BE GIVEN TO PREVENT CRUSHING OF THE MEMBER AT BEARING, SPLITTING AND/OR CRACKING OF THE WOOD, AND THE LIKE.
16. THE CONTRACTOR SHALL STRICTLY ADHERE TO THE CONNECTION DETAILS SPECIFIED ON THE PLANS OR INCLUDED WITH THE CONSTRUCTION DOCUMENTS. PRIOR APPROVAL IS REQUIRED FOR ANY DEVIATION FROM THE CONSTRUCTION DOCUMENTS.
17. IF CONNECTION DETAILS, APPROVED BY THE ENGINEER, HAVE NOT BEEN PROVIDED IN THE CONSTRUCTION DOCUMENTS, IT IS THE CONTRACTOR'S RESPONSIBILITY TO SPECIFY AND PROVIDE ALL STRUCTURAL CONNECTIONS. IF OTHER THAN STANDARD CONNECTIONS ARE REQUIRED, SEE ENGINEER FOR ADDITIONAL ASSISTANCE.
18. USE SIMPSON CONNECTIONS OR EQUIVALENT. INSTALL PER MANUFACTURERS SPECIFICATIONS.
19. SHOP DRAWINGS FOR ALL FABR

SPECIAL INSPECTION SCHEDULE

SOILS (IBC 1705.6)

REQ'D	TASK	INSPECTION FREQUENCY CONT.	INSPECTION FREQUENCY PERIODIC	COMMENTS:
X	VERIFY ADEQUATE MATERIALS BELOW FOOTINGS		♦	PRIOR TO PLACEMENT OF CONCRETE.
X	EXCAVATION EXTEND TO PROPER DEPTH AND MATERIALS		♦	PRIOR TO PLACEMENT OF COMPACTED FILL OR CONCRETE.
X	CLASSIFICATION AND TESTING OF FILL MATERIALS		♦	CHECK CLASSIFICATION AND GRADATIONS AT EACH LIFT, BUT NOT LESS THAN ONCE FOR EACH 10,000 FT^2 OF SURFACE AREA.
X	VERIFY PROPER FILL MATERIALS, LIFT THICKNESSES AND IN-PLACE DENSITIES	♦		
X	VERIFY PROPERLY PREPARED SITE AND SUBGRADE		♦	PRIOR TO PLACEMENT OF CONCRETE.

CONCRETE CONSTRUCTION (IBC 1705.3)

REQ'D	TASK	INSPECTION FREQUENCY CONT.	INSPECTION FREQUENCY PERIODIC	COMMENTS:
X	REINFORCING STEEL PLACEMENT		♦	VERIFY SIZE, CLEARANCES, SPLICES AND PROPER TIES.
	REINFORCING BAR WELDING a. WELDABILTY OF NON ASTM A706 BARS b. SINGLE PASS FILLED WELDS < $5/16$" c. ALL OTHER WELDS	 ♦ (c)	♦ (a) ♦ (b)	
X	CAST IN ANCHORS		♦	VERIFY MIX DESIGN MEETS STRENGTH AND EXPOSURE REQUIREMENTS LISTED ON APPROVED PLANS.
X	POST-INSTALLED ANCHORS a. ADHESIVE ANCHORS INSTALLED HORIZ. or UPWARDLY INCLINED RESISTING SUSTAINED TENSION LOADS b. POST INSTALLED ANCHORS NOT DEFINED IN a.	♦ (a)	♦ (b)	IN ACCORDANCE WITH APPROVED ICC-ES REPORT. PERIODIC INSPECTIONS ALLOWED IF STATED IN ES REPORT.
X	VERIFY REQUIRED DESIGN MIX		♦	VERIFY MIX DESIGN MEETS STRENGTH AND EXPOSURE REQUIREMENTS LISTED ON APPROVED PLANS.
X	SLUMP, AIR + TEMPERATURE TESTS. PREPARE STRENGTH TEST SAMPLES	♦		
X	CONCRETE PLACEMENT	♦		INCLUDES SAMPLING FOR AIR, SLUMP, STRENGTH AND TEMPERATURE TECHNIQUES.
X	CURING TEMPERATURE MAINTENANCE		♦	
	PRESTRESSED CONCRETE a. PRESTRESSING FORCES b. GROUTING OF BONDED TENDONS	♦ ♦		
	ERECTION OF PRECAST MEMBERS		♦	
	POST-TENSIONED CONCRETE STRENGTH		♦	
X	INSPECT FORMWORK		♦	

COLD-FORMED STEEL CONSTRUCTION (IBC 1705.11.2 & 1705.12.3)

REQ'D	TASK	INSPECTION FREQUENCY CONT.	INSPECTION FREQUENCY PERIODIC	COMMENTS:
	COMPONENTS OF WIND AND SEISMIC-FORCE RESISTING SYSTEMS		♦	VERIFY PROPER SCREW ATTACHMENT, BOLTING AND ANCHORING OF SHEAR WALLS, BRACES AND HOLDOWNS HAVING A FASTENER SPACING $\leq$ 4" O.C.
	FIELD WELDING OF ELEMENTS OF MAIN LATERAL FORCE RESISTING SYSTEM.		♦	

OTHER THAN STRUCTURAL STEEL (IBC 1705.2.2)

REQ'D	TASK	INSPECTION FREQUENCY CONT.	INSPECTION FREQUENCY PERIODIC	COMMENTS:
	STEEL ROOF & FLOOR DECK:			
	MATERIAL VERIFICATION OF STEEL DECK		♦	IDENTIFICATION MARKINGS PER APPLICABLE ASTM STANDARD
	ROOF AND DECK WELDS		♦	VERIFY THAT WELDS CONFORM TO AWS D1.3.
	WELDING OF REINFORCING STEEL:			
	VERIFICATION OF WELDABILITY (EXCEPT A706 BAR)		♦	VERIFY MATERIAL IS ABLE TO CONFORM TO AWS D1.4.

INSTALLATION OF OPEN-WEB STEEL JOISTS AND GIRDERS (IBC 1705.2.3)

REQ'D	TASK	INSPECTION FREQUENCY CONT.	INSPECTION FREQUENCY PERIODIC	COMMENTS:
	END CONNECTIONS		♦	SJI 2207.1
	BRIDGING - HORIZONTAL OR DIAGONAL a. STANDARD BRIDGING b. NON-STANDARD BRIDGING		♦ ♦	SJI 2207.1

MASONRY CONSTRUCTION (IBC 1705.4)

REQ'D	TASK	INSPECTION FREQUENCY CONT.	INSPECTION FREQUENCY PERIODIC	COMMENTS:
	MINIMUM TESTING (TMS - 402/602-16):			
X	VERIFICATION OF SLUMP FLOW AND VISUAL STABILITY INDEX (VSI) FOR SELF-CONSOLIDATING GROUT.		♦	COMPRESSIVE STRENGTH TESTS PER ASTM C 1019 FOR SLUMP FLOW AND ASTM C 1611 FOR VSI.
X	VERIFICATION OF F'_M.		♦	DETERMINE COMPRESSIVE STRENGTH PER "UNIT STRENGTH" OR "PRISM TEST" AS SPECIFIED IN ARTICLE 1.4.B OF ACI 530.1 PRIOR TO CONSTRUCTION.
	PRIOR TO CONSTRUCTION (TMS - 402/602-16):			
X	REVIEW MATERIAL CERTIFICATES, MIX DESIGNS, TEST RESULTS AND CONSTRUCTION PROCEDURES		♦	VERIFY MATERIALS CONFORM TO APPROVED CONSTRUCTION DOCUMENTS. MIX DESIGN, TEST RESULTS, MATERIAL CERTIFICATES, AND CONSTRUCTION PROCEDURES SHOULD BE SUBMITTED FOR REVIEW. MORTAR MIX DESIGNS SHALL CONFORM TO ASTM C 270 WHILE GROUT SHALL CONFORM TO ASTM C 476. MATERIAL CERTIFICATES SHALL BE PROVIDED FOR THE FOLLOWING: REINFORCEMENT; ANCHORS, TIES, FASTENERS, AND METAL ACCESSORIES; MASONRY UNITS; MORTAR AND GROUT MATERIALS. REVIEW COLD-WEATHER OR HOT-WEATHER CONSTRUCTION PROCEDURES.
	AS CONSTRUCTION BEGINS (TMS - 402/602-16):			
X	PROPORTIONS OF SITE-PREPARED MORTAR		♦	VERIFY THAT MORTAR IS TYPE AND COLOR SPECIFIED ON APPROVED PLANS, IT CONFORMS TO ASTM C 270, AND IS MIXED PER ARTICLE 2.6.A OF ACI 530.1.
X	CONSTRUCTION OF MORTAR JOINTS		♦	VERIFY MORTAR JOINTS MEET ARTICLE 3.3.B OF ACI 530.1.1
	GRADE AND SIZE OF PRE-STRESSING TENDONS AND ANCHORAGES		♦	VERIFY THAT PRE-STRESSING TENDONS CONFORM TO REQUIREMENTS OF ARTICLE 2.4B AND 2.4H OF ACI530.1
X	LOCATION OF REINFORCEMENT, CONNECTORS AND ANCHORAGES.		♦	VERIFY REINFORCEMENT IS PLACED IN ACCORDANCE WITH ARTICLE 3.4 OF 530.1.
	PRE-STRESSING TECHNIQUE		♦	VERIFY PRE-STRESSING TECHNIQUE CONFORMS TO ARTICLE 3.6B OR ACI 530.1
X	PROPERTIES OF THIN BED MORTAR FOR AAC MASONRY	♦	♦	VERIFY REINFORCEMENT IS PLACED IN ACCORDANCE WITH ARTICLE 3.4 OF 530.1.
	PRIOR TO GROUTING (TMS - 402/602-16):			
X	GROUT SPACE		♦	VERIFY GROUT SPACE IS FREE OF MORTAR DROPPINGS, DEBRIS, LOOSE AGGREGATE, AND OTHER DELETERIOUS MATERIALS AND THAT CLEANOUTS ARE PROVIDED PER ARTICLE 3.2D AND 3.2F OF ACI 530.1
X	GRADE, TYPE AND SIZE OF REINFORCEMENT, ANCHOR BOLTS AND ANCHORAGES.		♦	VERIFY REINFORCEMENT, JOINT REINFORCEMENT, ANCHOR BOLTS AND VENEER ANCHORS COMPLY WITH APPROVED PLANS AND SECTIONS 1.6 OF ACI 530.
X	PLACEMENT OF REINFORCEMENT, CONNECTORS AND ANCHORAGES.		♦	VERIFY REINFORCEMENT, JOINT REINFORCEMENT, ANCHOR BOLTS AND VENEER ANCHORS ARE INSTALLED PER APPROVED PLANS AND ARTICLES 3.2.E, 3.4, AND 3.6.A OF ACI 530.1.
X	PROPORTIONS OF SITE-PREPARED GROUT.		♦	VERIFY GROUT PROPORTIONS MEET ASTM C 476 AND A SLUMP BETWEEN 8-11 INCHES. SELF-CONSOLIDATED GROUT SHALL NOT BE PROPORTIONED ONSITE.
X	CONSTRUCTION OF MORTAR JOINTS		♦	VERIFY MORTAR JOINTS PLACED IN ACCORDANCE WITH ARTICLE 3.3.B OF ACI 530.1.
	DURING CONSTRUCTION (TMS - 402/602-16):			
X	SIZE AND LOCATION OF STRUCTURAL ELEMENTS		♦	VERIFY LOCATIONS OF STRUCTURAL ELEMENTS PER APPROVED PLANS AND CONFIRM TOLERANCES MEET ARTICLE 3.3.F OF ACI 530.1.
X	TYPE, SIZE AND LOCATION OF ANCHORS, FRAMES, ETC.		♦	VERIFY CORRECT ANCHORAGES AND CONNECTIONS ARE PROVIDED PER APPROVED PLANS AND SECTIONS 1.16.4.3 AND 1.17.1 OF ACI 530.
X	WELDING OF REINFORCEMENT	♦		VERIFY CONFORMANCE WITH SECTIONS 2.1.7.7.2, 3.3.3.4 (c) AND 8.3.3.4 (b) OF ACI 530
	APPLICATION AND MEASUREMENT OF PRE-STRESSING FORCE	♦		VERIFY CONFORMANCE WITH ARTICLE 3.6B OF ACI 530.1
X	PLACEMENT OF GROUT	♦		
X	PREPARATION, CONSTRUCTION AND PROTECTION OF MASONRY DURING COLD WEATHER (<40°F) OR HOT WEATHER (>90°F).		♦	VERIFY COLD-WEATHER CONSTRUCTION COMPLIES WITH ARTICLE 1.8.C OF ACI 530.1 AND HOT WEATHER CONSTRUCTION PER ARTICLE 1.8.D OF ACI 530.1.
	PLACEMENT OF GROUT AND PRE-STRESSING GROUT FOR BONDED TENDONS	♦		VERIFY COMPLIANCE WITH ARTICLE 3.5, 3.6C OF ACI 530.1
X	OBSERVATION OF GROUT SPECIMENS, MORTAR SPECIMENS, AND / OR PRISMS.		♦	CONFIRM SPECIMENS/ PRISMS ARE PERFORMED AS REQUIRED BY ARTICLE 1.4 OF ACI 530.1.

WOOD CONSTRUCTION (IBC 1705.11.1)

REQ'D	TASK	INSPECTION FREQUENCY CONT.	INSPECTION FREQUENCY PERIODIC	COMMENTS:
	COMPONENTS OF WIND AND SEISMIC-FORCE RESISTING SYSTEMS		♦	VERIFY PROPER SCREW ATTACHMENT, BOLTING AND ANCHORING OF SHEAR WALLS, BRACES AND HOLDOWNS HAVING A FASTENER SPACING $\leq$ 4" O.C.
	FIELD GLUING OF MAIN LATERAL FORCE RESISTING SYSTEM	♦		

STATEMENT OF SPECIAL INSPECTIONS

1. THE PROJECT OWNER SHALL EMPLOY ONE OR MORE SPECIAL INSPECTORS TO PROVIDE INSPECTIONS DURING CONSTRUCTION ON THE TYPES OF WORK LISTED BELOW. THE SPECIAL INSPECTOR SHALL BE A QUALIFIED PERSON WHO SHALL DEMONSTRATE COMPETENCE, TO THE SATISFACTION OF THE BUILDING OFFICIAL, FOR INSPECTION OF THE PARTICULAR TYPE OF CONSTRUCTION OR OPERATION REQUIRING SPECIAL INSPECTION. THESE INSPECTIONS ARE IN ADDITION TO THE INSPECTIONS REQUIRED BY THE BUILDING DEPARTMENT OF THE LOCAL JURISDICTION.

2. SPECIAL INSPECTORS SHALL KEEP RECORDS OF INSPECTIONS. THE SPECIAL INSPECTOR SHALL FURNISH INSPECTION REPORTS TO THE BUILDING OFFICIAL AND TO THE REGISTERED DESIGN PROFESSIONAL IN RESPONSIBLE CHARGE. REPORTS SHALL INDICATE THAT WORK INSPECTED WAS DONE IN CONFORMANCE WITH APPROVED CONSTRUCTION DOCUMENTS. DISCREPANCIES SHALL BE BROUGHT TO THE IMMEDIATE ATTENTION OF THE CONTRACTOR FOR CORRECTION. IF THE DISCREPANCIES ARE NOT CORRECTED, THE DISCREPANCIES SHALE BE BROUGHT TO THE ATTENTION OF THE BUILDING OFFICIAL AND TO THE REGISTERED DESIGN PROFESSIONAL IN RESPONSIBLE CHARGE PRIOR TO THE COMPLETION OF THAT A PHASE OF THE WORK. A FINAL REPORT DOCUMENTING REQUIRED SPECIAL INSPECTIONS AND CORRECTION OF ANY DISCREPANCIES NOTED IN THE INSPECTIONS SHALL BE SUBMITTED AT A POINT IN TIME AGREED UPON BY THE PERMIT APPLICANT AND THE BUILDING OFFICIAL PRIOR TO THE START OF WORK.

3. SPECIAL INSPECTIONS FOR EACH TASK SHALL BE CARRIED OUT IN COMPLIANCE WITH REQUIREMENTS PER THE CURRENT IBC AND OTHER MATERIAL STANDARDS.

FABRICATION SHOP REQUIREMENTS

4. WHERE FABRICATION OF STRUCTURAL LOAD BEARING MEMBERS AND ASSEMBLIES IS BEING PERFORMED ON THE PREMISES OF A FABRICATORS SHOP, SPECIAL INSPECTIONS REQUIRED BELOW SHALL BE PROVIDED IN THE SHOP DURING THE FABRICATION PROCESS. THIS REQUIREMENT MAY BE EXCEPTED IF THE WORK IS DONE ON THE PREMISES OF A FABRICATOR REGISTERED AND APPROVED TO PERFORM SUCH WORK WITHOUT SPECIAL INSPECTION. A CERTIFICATE SHALL BE REQUIRED TO VERIFY SUCH APPROVAL. AT COMPLETION OF THE FABRICATION, THE APPROVED FABRICATOR SHALL SUBMIT A CERTIFICATE OF COMPLIANCE TO THE BUILDING OFFICIAL STATING THAT THE WORK WAS PERFORMED IN ACCORDANCE WITH THE APPROVED CONSTRUCTION DRAWINGS.

STRUCTURAL STEEL CONSTRUCTION (IBC 1705.2)

REQ'D	TASK	INSPECTION TYPE Q.C.	INSPECTION TYPE Q.A.	COMMENTS:
	PRIOR TO WELDING (TABLE N5.4-1, AISC 360-16):			
X	VERIFY WELDING PROCEDURES	P	P	
X	MANUFACTURER CERTIFICATIONS	P	P	
X	MATERIAL IDENTIFICATION	O	O	VERIFY TYPE AND GRADE OF MATERIAL.
X	WELDER IDENTIFICATION	O	O	VERIFY THERE IS A SYSTEM IN PLACE TO IDENTIFY THE WELDER WHO HAS WELDED A JOINT OR MEMBER.
X	FIT-UP GROOVE WELDS	O	O	VERIFY JOINT PREPARATION, DIMENSIONS, CLEANLINESS, TACKING AND BACKING.
X	ACCESS HOLES	O	O	VERIFY CONFIGURATION AND FINISH.
X	FIT-UP FILLET WELDS	O	O	VERIFY ALIGNMENT, GAPS AT ROOT, CLEANLINESS OF STEEL SURFACES, TACK WELD QUALITY AND LOCATION.
X	CHECK WELDING EQUIPMENT	O	O	
	DURING WELDING (TABLE N5.4-2, AISC 360-16):			
X	USE OF QUALIFIED WELDERS	O	O	VERIFY THAT WELDERS ARE APPROPRIATELY QUALIFIED.
X	CONTROL AND HANDLING OF WELDING CONSUMABLES	O	O	VERIFY PACKAGING AND EXPOSURE CONTROL.
X	CRACKED TACK WELDS	O	O	VERIFY WELDING IS NOT OVER A CRACKED TACK WELD.
X	ENVIRONMENTAL CONDITIONS	O	O	VERIFY WIND SPEED IS WITHIN LIMITS AS WELL AS PRECIPITATION AND TEMPERATURE.
X	WPS FOLLOWED	O	O	VERIFY ITEMS SUCH AS WELDING EQUIPMENT SETTINGS, TRAVEL SPEED, WELDING MATERIALS, SHIELDING GAS TYPE/FLOW RATE, PREHEAT APPLIED, INTERPASS TEMPERATURE MAINTAINED, AND PROPER POSTITION.
X	WELDING TECHNIQUES	O	O	VERIFY INTERPASS AND FINAL CLEANING, EACH PASS IS WITHIN PROFILE LIMITATIONS, AND QUALITY OF EACH PASS.
	AFTER WELDING (TABLE N5.4-3, AISC 360-16):			
X	WELDS CLEANED	O	O	VERIFY THAT WELDS HAVE BEEN PROPERLY CLEANED.
X	SIZE, LENGTH AND LOCATION OF WELDS	P	P	
X	WELDS MEET VISUAL ACCEPTANCE CRITERIA	P	P	
X	ARC STRIKES	P	P	
	PRIOR TO BOLTING (TABLE N5.6-1 AISC 360-16):			
X	MANUFACTURERS CERTIFICATIONS FOR FASTENERS	O	P	
X	FASTENERS MARKED w/ ASTM REQUIREMENTS	O	O	
X	PROPER FASTENERS SELECTED FOR DETAIL	O	O	
X	PROPER PROCEDURE FOR DETAIL	O	O	
X	CONNECTING ELEMENTS	O	O	
X	PRE-INSTALLATION VERIFICATION TESTING	P	O	
X	PROPER STORAGE OF FASTENERS	O	O	
	DURING BOLTING (TABLE N5.6-2 AISC 360-16):			
X	FASTENER ASSEMBLIES	O	O	
X	JOINTS SNUG TIGHT PRIOR TO PRETENSIONING	O	O	
X	PROPER WRENCH USAGE	O	O	
X	FASTENERS PRETENSIONED	O	O	
	AFTER BOLTING (TABLE N5.6-3, AISC 360-16):			
X	STRUCTURAL STEEL DETAILS	P	P	

O- OBSERVE THESE ITEMS ON A RANDOM BASIS.

P- PERFORM THESE TASKS FOR EACH WELDED / BOLTED JOINT OR MEMBER (AISC 360-10 N5.4)

100 PERCENT SET

blu line designs
planning | landscape architecture | design
8719 S. Sandy Parkway
Sandy, UT 84070
p 801.679.3157

CLIENT
FARMINGTON CITY
CONTACT: SYLVIA CLARK
PH: 801.939.9295
EMAIL:
SCLARK@FARMINGTON.UTAH.GOV

FARMINGTON

WPA architecture
WPA Architecture
1535 N FREEDOM BLVD, STE 360
PROVO, UTAH 84604
801.374.0800
info@wpa-architecture.com

IVY ACRES PARK

1397 WEST COOK LANE
FARMINGTON, UTAH

REVISIONS

NO.	yy/mm/day	DESCRIPTION

Stamp
PROFESSIONAL ENGINEER NO. 8362972 BRAD R. ELLIS 3-6-24 STATE OF UTAH

Designed By:	BRE
Drawn By:	MN
Date:	03.06.2024
Checked By:	BRE
Project No:	181023

Drawing Title
Special Inspections

Drawing number
S0.2

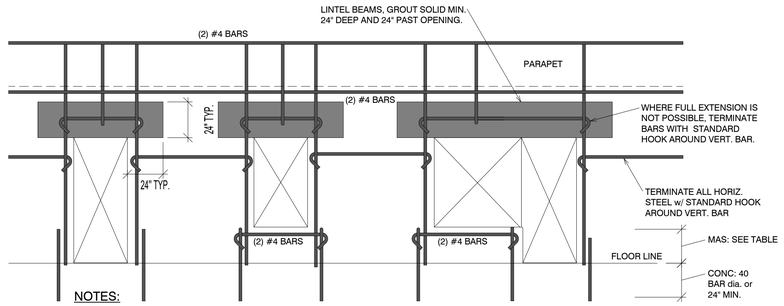

NOTES:

1. SEE PLAN AND BEAM SCHEDULE FOR SIZE AND REINFORCING REQUIRED
2. AT ALL JAMBS, PROVIDE (2) TYP. VERT. BARS OR (2) #4 VERT. BARS, WHICHEVER IS GREATER

6 S0.3 CONSTRUCTION DETAIL
NO SCALE

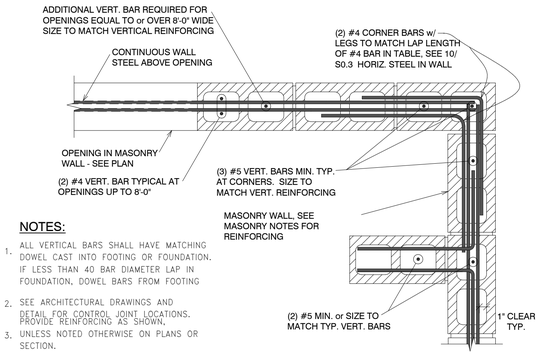

NOTES:

1. ALL VERTICAL BARS SHALL HAVE MATCHING DOWEL CAST INTO FOOTING OR FOUNDATION. IF LESS THAN 40 BAR DIAMETER LAP IN FOUNDATION, DOWEL BARS FROM FOOTING
2. SEE ARCHITECTURAL DRAWINGS AND DETAIL FOR CONTROL JOINT LOCATIONS. PROVIDE REINFORCING AS SHOWN,
3. UNLESS NOTED OTHERWISE ON PLANS OR SECTION.
4. CONTINUE WALL REINFORCING THROUGH LINTEL BEAM ABOVE OPENING, TYPICAL.

3 S0.3 CONSTRUCTION DETAIL
NO SCALE

MASONRY WALL SCHEDULE

MARK	WALL WIDTH	WALL HEIGHT	VERT. REINFORCING SIZE	VERT. REINFORCING SPACING	HORIZ. REINFORCING No.	HORIZ. REINFORCING SIZE	HORIZ. REINFORCING SPACING
MW-1	8"	-	#5	32" O.C.	(2)	#4	48" O.C.
MW-2	8"	-	#5	16" O.C.	(2)	#4	8" O.C.

SOLID GROUT ALL REINFORCED CELLS

MASONRY BEAM SCHEDULE

MARK	BEAM WIDTH	BEAM DEPTH	* TOP BARS No.	* TOP BARS SIZE	BOTTOM BARS No.	BOTTOM BARS SIZE	STIRRUPS SIZE	STIRRUPS SPACING	REMARKS
MB-1	8"	16"	-	-	(2)	#4	-	-	GROUT SOLID
MB-2	8"	32"	-	-	(2)	#4	-	-	GROUT SOLID

* SEE MASONRY PLANS FOR ADDITIONAL TOP BAR REQUIREMENTS FOR BEAMS SPANNING OVER COLUMNS

SEE NOTES AND DIAGRAMS THIS PAGE

1 S0.3 CONSTRUCTION DETAIL
NO SCALE

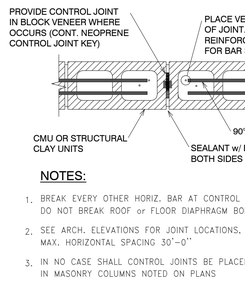

NOTES:

1. BREAK EVERY OTHER HORIZ. BAR AT CONTROL JOINT. DO NOT BREAK ROOF or FLOOR DIAPHRAGM BOND BEAM BARS
2. SEE ARCH. ELEVATIONS FOR JOINT LOCATIONS. MAX. HORIZONTAL SPACING 30'-0"
3. IN NO CASE SHALL CONTROL JOINTS BE PLACED IN MASONRY COLUMNS NOTED ON PLANS
4. IN NO CASE SHALL CONTROL JOINTS BE PLACED WITHIN 24" OF OPENING

4 S0.3 CONSTRUCTION DETAIL
NO SCALE

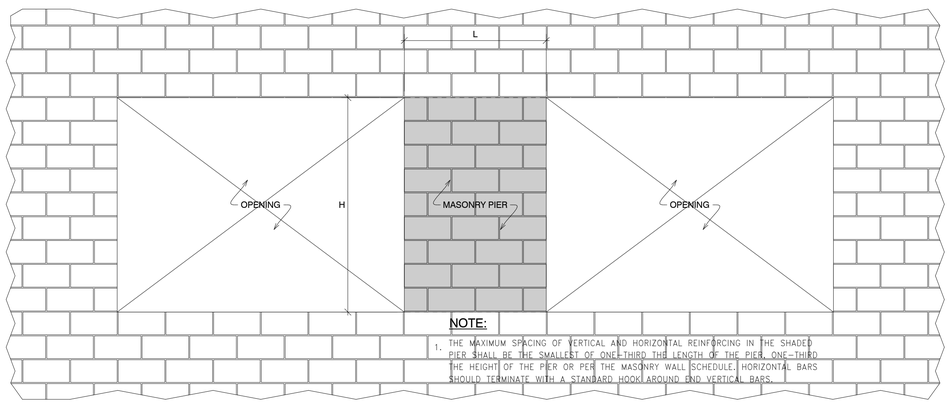

NOTE:

1. THE MAXIMUM SPACING OF VERTICAL AND HORIZONTAL REINFORCING IN THE SHADED PIER SHALL BE THE SMALLEST OF ONE-THIRD THE LENGTH OF THE PIER, ONE-THIRD THE HEIGHT OF THE PIER OR PER THE MASONRY WALL SCHEDULE. HORIZONTAL BARS SHOULD TERMINATE WITH A STANDARD HOOK AROUND END VERTICAL BARS.

5 S0.3 CONSTRUCTION DETAIL
NO SCALE

1. ALL HORIZONTAL REINFORCING SHALL EXTEND 24" MIN. BEYOND EDGE OF OPENING, INTO SUPPORT.
2. IF HORIZONTAL REINFORCING CANNOT EXTEND 24" BEYOND EDGE OF OPENING AS INDICATED ABOVE, PROVIDE STANDARD 90 DEG. HOOK AT ENDS. DO NOT LAP BOTTOM STEEL AT CENTER SPAN, NOR TOP STEEL NEAR INTERIOR OR EXTERIOR SUPPORTS.
3. ALL LAPS OF TYP. WALL BOND BEAMS SHALL BE MADE IN THE SECTION OF THE WALL, AND NOT IN THE LINTEL.
4. SHORE OPENING AS REQUIRED.
5. USE "U" BLOCK (SAME THICKNESS AS THE WALL), AS THE BOTTOM BLOCK OF THE LINTEL
6. ALL STANDARD WALL REINFORCING STEEL SHALL CONTINUE THROUGH THE LINTEL SECTION (HORIZONTAL AND VERTICAL).
7. ALL LINTELS, AND 24" OF ADJACENT WALLS, SHALL BE GROUTED SOLID.
8. f'm = 2000 PSI, UNLESS NOTED OTHERWISE. REINFORCING STEEL = GRADE 60.
9. SPECIAL INSPECTION IS REQUIRED. SEE STATEMENT OF SPECIAL INSPECTION SHEETS
10. SEE ARCHL SECTIONS FOR COMBINATIONS OF CMU AND ATLAS BLOCKS
11. ALL MASONRY BEAMS NOT SPECIFICALLY CALLED OUT ON FRAMING PLAN SHALL BE BEAM MB-1
12. PENETRATIONS THROUGH LINTELS FOR MECHANICAL, ELECTRICAL SYSTEMS, ETC. ARE NOT PERMITTED WITHOUT APPROVAL OF THE ENGINEER.

USE WITH MASONRY BEAM SCHEDULE AT RIGHT

2 S0.3 CONSTRUCTION DETAIL
NO SCALE

blu line designs
planning | landscape architecture | design
8719 S. Sandy Parkway
Sandy, UT 84070
p 801.679.3157

CLIENT

FARMINGTON CITY
CONTACT: SYLVIA CLARK
PH: 801.939.9295
EMAIL: SCLARK@FARMINGTON.UTAH.GOV

FARMINGTON

WPA architecture
WPA Architecture
1535 N FREEDOM BLVD, STE 360
PROVO, UTAH 84604
801.374.0800
info@wpa-architecture.com

IVY ACRES PARK

1397 WEST COOK LANE
FARMINGTON, UTAH

REVISIONS

NO.	yy/mm/dd	DESCRIPTION

Stamp

PROFESSIONAL ENGINEER
NO. 10629279
BRADEN R. ELLIS
3-6-24
STATE OF UTAH

Designed By:	BRE
Drawn By:	MN
Date:	03.06.2024
Checked By:	BRE
Project No:	181023

Drawing Title

Construction Details

SCALE: AS SHOWN

Drawing number

S0.3

100 PERCENT SET

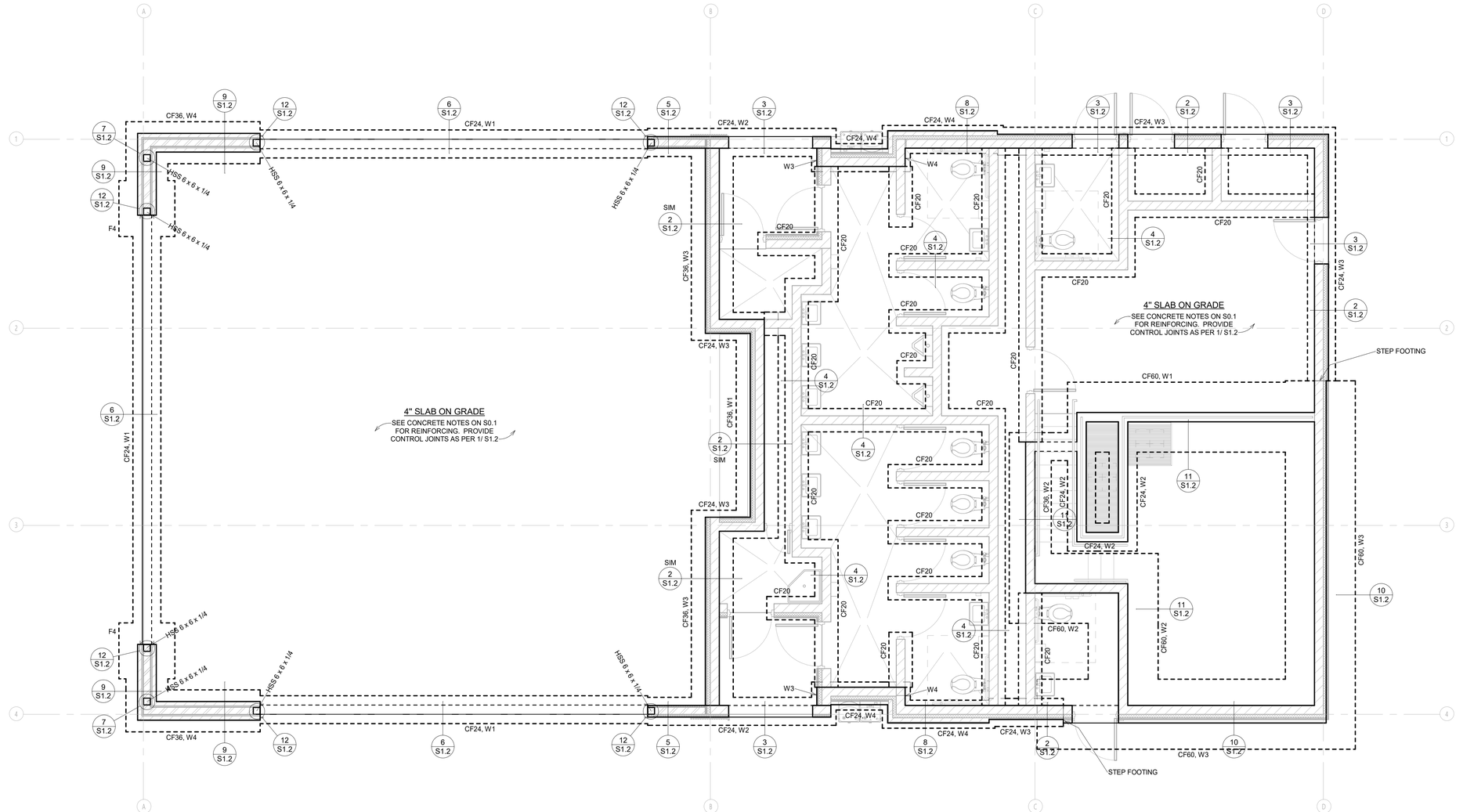

FOUNDATION WALL SCHEDULE

MARK	WALL WIDTH	WALL HEIGHT	VERT. REINFORCING SIZE	VERT. REINFORCING SPACING	HORIZ. REINFORCING SIZE	HORIZ. REINFORCING SPACING
W1	8"	4'-0" MAX	#4	18" O.C.	#4	18" O.C.
W2	10"	9'-0" MAX	#5	12" O.C.	#5	12" O.C.
★ W3	12"	10'-0" MAX	#4	18" O.C.	#4	18" O.C.
★ W4	15"	9'-0" MAX	#5	18" O.C.	#5	18" O.C.
★ W5	16"	4'-0" MAX	#5	12" O.C.	#5	12" O.C.

1. PLACE (2) #4 HORIZ. BARS AT TOP OF WALL CONTINUOUS, TYP.
2. RECESS TOP OF WALL AT OPENINGS and POUR SLAB THROUGH, SEE DETAILS

★ THIS WALL REQUIRES (2) MATS OF REINFORCING (1) MAT 2" OFF EA. FACE AS SPECIFIED ABOVE

FOOTING SCHEDULE

MARK	WIDTH	LENGTH	DEPTH	REINFORCING CROSS-WISE No.	SIZE	LENGTH	SPACING	REINFORCING LENGTH-WISE No.	SIZE	LENGTH	SPACING
CF20	20"	CONT.	12"	-	-	-	-	(3)	#4	CONT.	EQUAL
CF24	24"	CONT.	12"	-	-	-	-	(3)	#4	CONT.	EQUAL
CF36	36"	CONT.	12"	-	#4	30"	12" O.C.	(4)	#4	CONT.	EQUAL
CF60	60"	CONT.	12"	-	#4	30"	12" O.C.	(4)	#4	CONT.	EQUAL
F3	3'-0"	3'-0"	12"	(4)	#4	2'-6"	EQUAL	(4)	#4	2'-6"	EQUAL
F4	4'-0"	4'-0"	12"	(5)	#4	3'-6"	EQUAL	(5)	#4	3'-6"	EQUAL

100 PERCENT SET

blu line designs
planning | landscape architecture | design
8719 S. Sandy Parkway
Sandy, UT 84070
p 801.679.3157

CLIENT

FARMINGTON CITY
CONTACT: SYLVIA CLARK
PH: 801.939.9295
EMAIL:
SCLARK@FARMINGTON.UTAH.GOV

FARMINGTON

WPA Architecture
1535 N FREEDOM BLVD, STE 360
PROVO, UTAH 84604
801.374.0800
info@wpa-architecture.com

IVY ACRES PARK

1397 WEST COOK LANE
FARMINGTON, UTAH

REVISIONS

NO.	DATE	DESCRIPTION

Stamp

PROFESSIONAL ENGINEER
NO. 8362972
BRAD R. ELLIS
3-6-24
STATE OF UTAH

Designed By:	BRE
Drawn By:	MN
Date:	03.06.2024
Checked By:	BRE
Project No:	181023

Drawing Title

Foundation Plan

SCALE: 1/4" = 1'-0"

Drawing number

S1.1

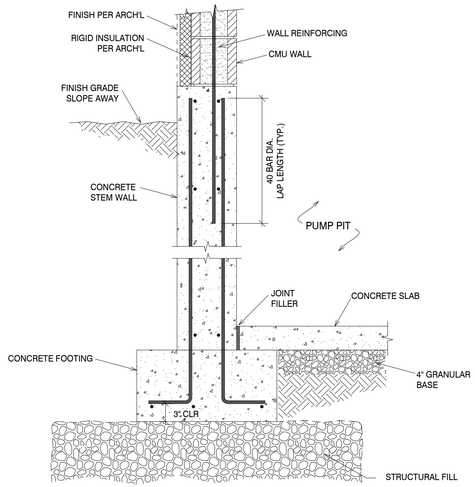

10 S1.2 CONSTRUCTION DETAIL
NO SCALE

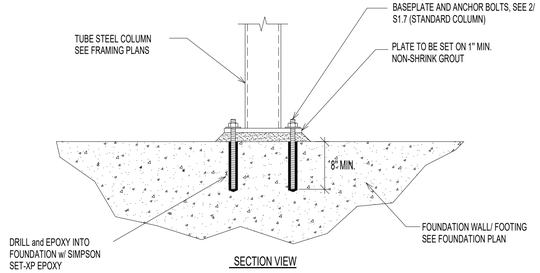

SECTION VIEW

7 S1.2 CONSTRUCTION DETAIL
NO SCALE

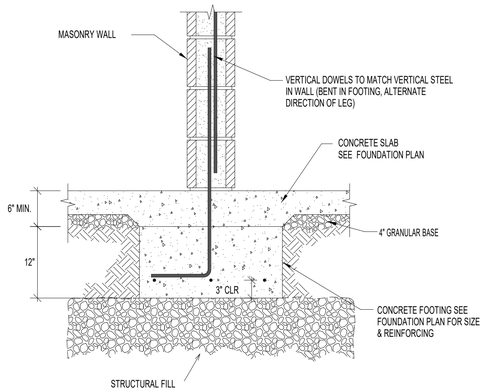

4 S1.2 CONSTRUCTION DETAIL
NO SCALE

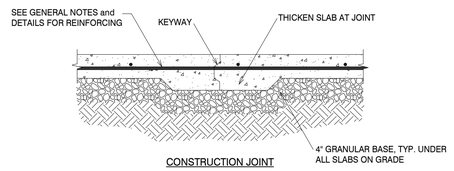

CONSTRUCTION JOINT

PROVIDE CONTROL JOINTS AT APPROX. 10'-0" EACH WAY
PROVIDE ESPECIALLY AT CORNERS, COLUMN LOCATIONS AND TRANSITIONS IN SLAB THICKNESS

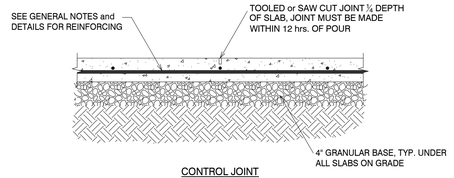

CONTROL JOINT

1 S1.2 CONSTRUCTION DETAIL
NO SCALE

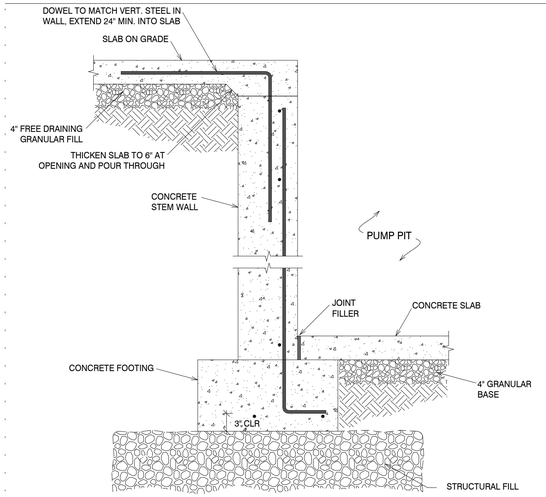

11 S1.2 CONSTRUCTION DETAIL
NO SCALE

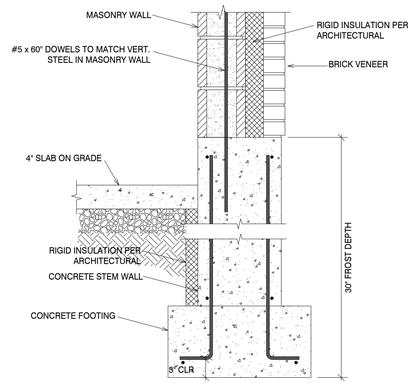

8 S1.2 CONSTRUCTION DETAIL
NO SCALE

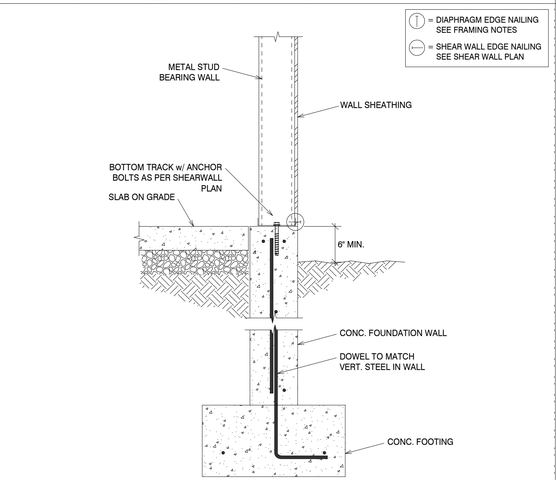

5 S1.2 CONSTRUCTION DETAIL
NO SCALE

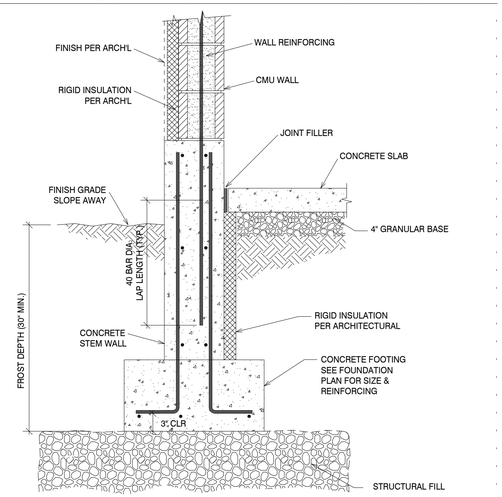

2 S1.2 CONSTRUCTION DETAIL
NO SCALE

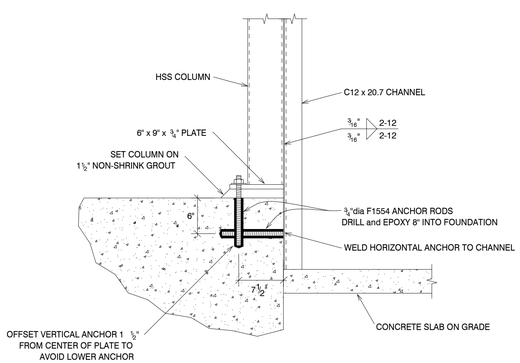

12 S1.2 CONSTRUCTION DETAIL
NO SCALE

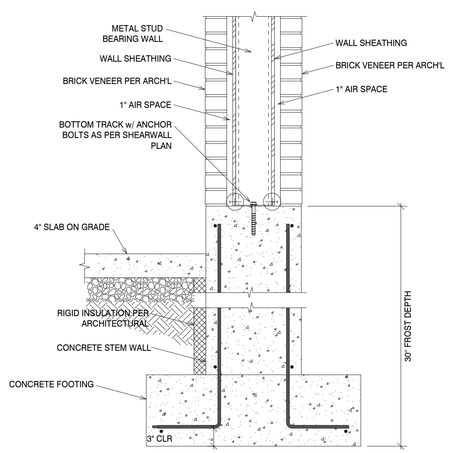

9 S1.2 CONSTRUCTION DETAIL
NO SCALE

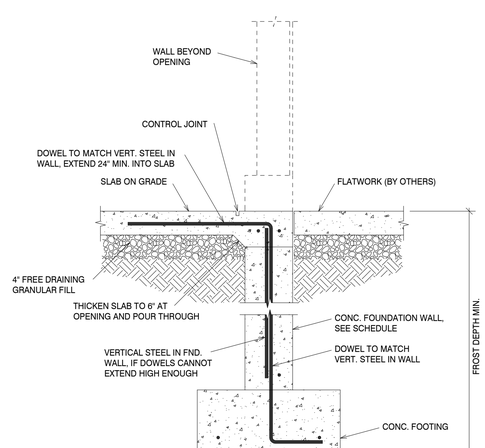

6 S1.2 CONSTRUCTION DETAIL
NO SCALE

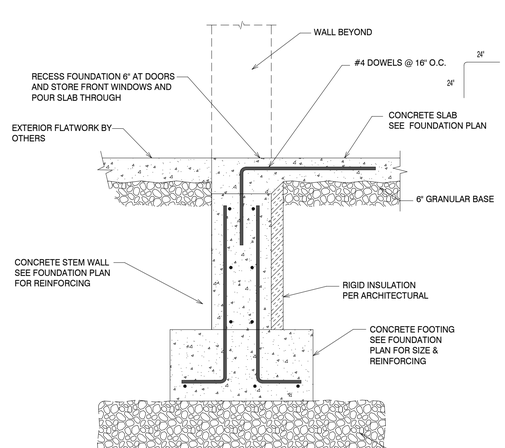

3 S1.2 CONSTRUCTION DETAIL
NO SCALE

100 PERCENT SET

blu line designs
planning | landscape architecture | design
8719 S. Sandy Parkway
Sandy, UT 84070
p 801.679.3157

CLIENT
FARMINGTON CITY
CONTACT: SYLVIA CLARK
PH: 801.939.9295
EMAIL: SCLARK@FARMINGTON.UTAH.GOV

FARMINGTON

WPA Architecture
1535 N FREEDOM BLVD, STE 360
PROVO, UTAH 84604
801.374.0800
info@wpa-architecture.com

IVY ACRES PARK

1397 WEST COOK LANE
FARMINGTON, UTAH

REVISIONS

NO.	MM/DD/YY	DESCRIPTION

Stamp
PROFESSIONAL ENGINEER
NO. 10162877
BRAD R. ELLIS
3-6-24
STATE OF UTAH

Designed By:	BRE
Drawn By:	MN
Date:	03.06.2024
Checked By:	BRE
Project No:	181023

Drawing Title

Construction Details

SCALE: AS SHOWN

Drawing number

S1.2

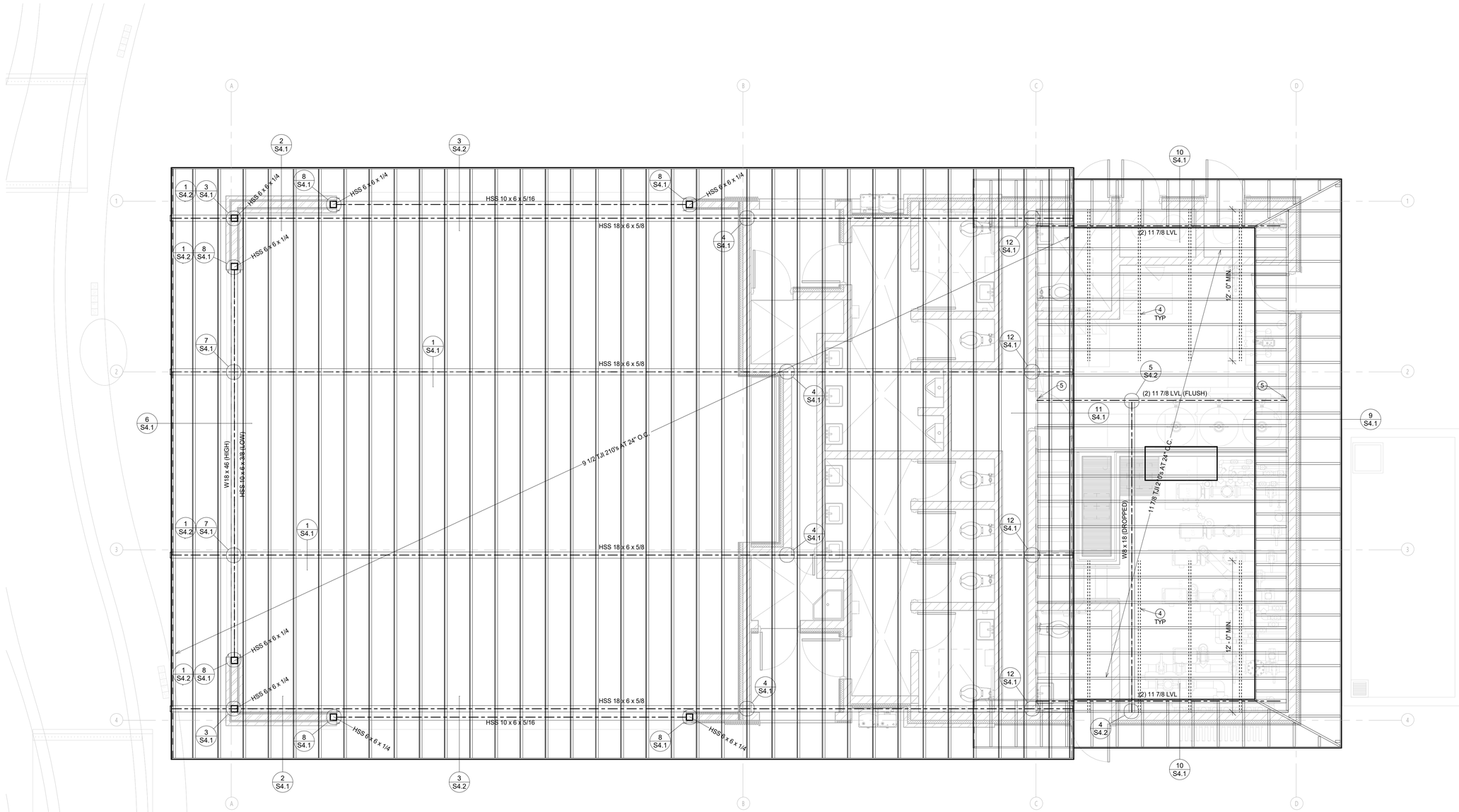

ROOF FRAMING NOTES

1. FRAME ROOF w/ TJI JOISTS AS CALLED OUT ON LAYOUT
2. SEE FRAMING NOTES ON S0.1 FOR ROOF SHEATHING REQUIREMENTS
3. SEE S3.1 FOR MASONRY HEADER and WALL CALLOUTS
4. SIMPSON CS16 STRAP and BLOCKING AS SHOWN IN DETAIL 10/ S4.1
5. SIMPSON HU410. INSTALL WITH 1/4" x 2 3/4" TITEN TURBO SCREWS. FILL ALL SCREW HOLES

blu line designs
planning | landscape architecture | design

8719 S. Sandy Parkway
Sandy, UT 84070
p 801.679.3157

CLIENT

FARMINGTON CITY
CONTACT: SYLVIA CLARK
PH: 801.939.9295
EMAIL:
SCLARK@FARMINGTON.UTAH.GOV

WPA Architecture
1535 N FREEDOM BLVD, STE 360
PROVO, UTAH 84604
801.374.0800
info@wpa-architecture.com

IVY ACRES PARK

1397 WEST COOK LANE
FARMINGTON, UTAH

100 PERCENT SET

REVISIONS

NO.	yy/mm/dd	DESCRIPTION

Stamp

PROFESSIONAL ENGINEER
NO. 8362777
BRAD R. ELLIS
3-6-24
STATE OF UTAH

Designed By:	BRE
Drawn By:	MN
Date:	03.06.2024
Checked By:	BRE
Project No:	181023

Drawing Title

Roof Framing Plan

SCALE: 1/4" = 1'-0"

Drawing number

S2.1

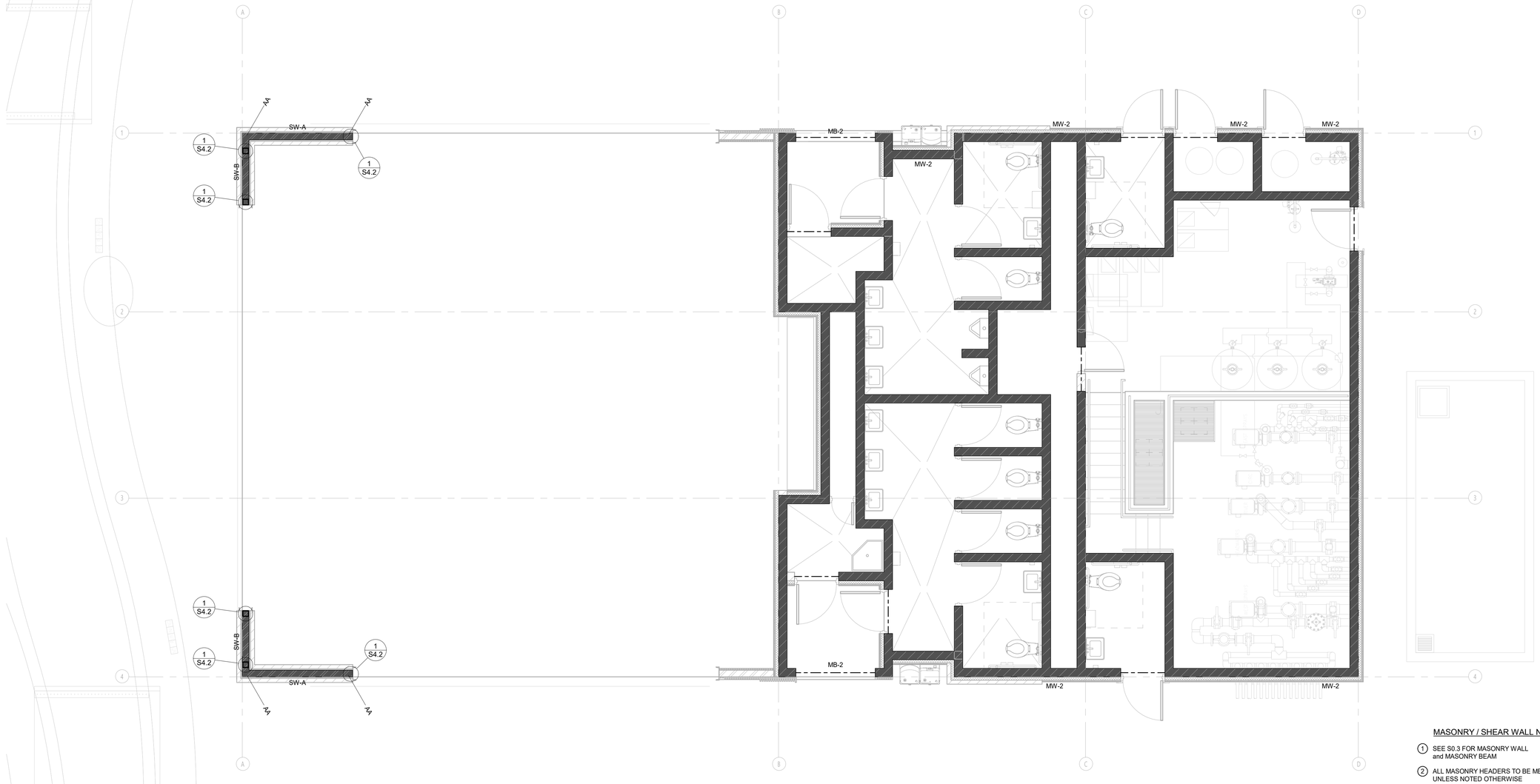

LIGHT GAUGE SHEARWALL SCHEDULE

MARK	PANEL GRADE	PANEL THICKNESS	PANEL EDGE SCREW ATTACHMENT	PANEL FIELD SCREW ATTACHMENT	STUDS AT ADJOINING PANEL EDGES	ANCHOR BOLTS AT FOUNDATION LEVEL	SILL PLATE AT FOUNDATION
(A)	APA EXP. 1	7/16"	#8 AT 4" O.C.	#8 AT 12" O.C.	600S162-54	SIMPSON 1/2"dia x 6" TITEN ANCHORS AT 32" O.C.	600T125-54
(B)	APA EXP. 1	7/16"	#8 AT 3" O.C.	#8 AT 12" O.C.	(2) 600S162-54	SIMPSON 5/8"dia x 6" TITEN ANCHORS AT 16" O.C.	600T125-54

1. SEE GENERAL NOTES FOR ADDITIONAL INFORMATION
2. PLYWOOD, ORIENTED STRAND BOARD and COMPOSITE BOARD (BUT NOT STRUCTURAL PARTICLE BOARD) ARE ACCEPTED AS EQUALS
3. ALL PANEL EDGES AT SHEARWALLS TO BE BACKED w/ 1 5/8" WIDE FRAMING. EXCEPT WHERE INDICATED TO BE DOUBLE FRAMING
4. ALL ANCHOR BOLTS TO HAVE A 3" x 3" x 1/4" PLATE WASHER (SEE SHEARWALL SCHEDULE ABOVE FOR SPACING)
5. ALL STUDS IN SHEARWALLS SHALL 50 ksi STEEL
6. SHEARWALL PANELS INDICATED ON SCHEDULE TO BE SHEATHED FULL HEIGHT OF WALL
7. SEE SPECIAL INSPECTION PAGE FOR ADDITIONAL REQUIREMENTS
8. WHERE PANELS ARE APPLIED ON BOTH FACES OF A SHEARWALL, and ATTACHMENT SPACING IS LESS THAN 6" O.C. ON EITHER SIDE, PANEL JOINTS SHALL BE OFFSET TO FALL ON DIFFERENT FRAMING MEMBERS. ALTERNATIVELY, THE WIDTH OF THE FRAMING MEMBERS SHALL BE DOUBLE STUDS or GREATER AT ADJOINING PANEL EDGES and ATTACHMENT AT ALL PANEL EDGES SHALL STAGGERED.
9. ALL HORIZONTAL ADJOINING PANEL EDGES USE 2" WIDE 16ga (54 MIL) CONT. FLAT STRAP FOR ALL ATTACHMENT PATTERNS
10. DOUBLE STUDS USED AT ADJOINING PANEL EDGES NEED TO BE CONNECTED TOGETHER w/ #10 SCREWS AT 6" O.C. (CONTINUOUS)

LIGHT GAUGE HOLD DOWN SCHEDULE

MARK	HOLDOWN	ATTACHMENT TO STUDS	FOUNDATION ANCHORS	MINIMUM STUDS	REMARKS
AA	SIMPSON S/HDU9	(18) #14 SCREWS	PAB7H	(2) 600S162-54	DETAIL 1/ S331

1. ALL ANCHORS ARE SIMPSON STRONG-TIE (OR EQUAL)
2. INSTALLATION OF ALL HODOWN ANCHORS and STRAPS SHALL BE PER MANUFACTURERS RECOMMENDATIONS and SPECIFICATIONS
3. PROVIDE EDGE NAILING ALONG STUDS CONNECTED TO HOLDOWN ANCHORS and STRAPS, SEE DETAILS
4. SEE SPECIAL INSPECTION PAGE FOR ADDITIONAL REQUIREMENTS

MASONRY / SHEAR WALL NOTES

1. SEE S0.3 FOR MASONRY WALL and MASONRY BEAM
2. ALL MASONRY HEADERS TO BE MB-1 UNLESS NOTED OTHERWISE
3. ALL MASONRY WALLS TO BE MW-1 UNLESS NOTED OTHERWISE

blu line designs
planning | landscape architecture | design
8719 S. Sandy Parkway
Sandy, UT 84070
p 801.679.3157

CLIENT
FARMINGTON CITY
CONTACT: SYLVIA CLARK
PH: 801.939.9295
EMAIL:
SCLARK@FARMINGTON.UTAH.GOV

WPA Architecture
1535 N FREEDOM BLVD, STE 360
PROVO, UTAH 84604
801.374.0800
info@wpa-architecture.com

IVY ACRES PARK

1397 WEST COOK LANE
FARMINGTON, UTAH

REVISIONS

NO	APPROVAL	DESCRIPTION

Stamp

PROFESSIONAL ENGINEER
NO. 10629778
BRAD E. ELLIS
3-6-24
STATE OF UTAH

Designed By:	BRE
Drawn By:	MN
Date:	03.06.2024
Checked By:	BRE
Project No:	181023

Drawing Title

Masonry and Shear Wall Plans

SCALE: 1/4" = 1'-0"

Drawing number

S3.1

100 PERCENT SET

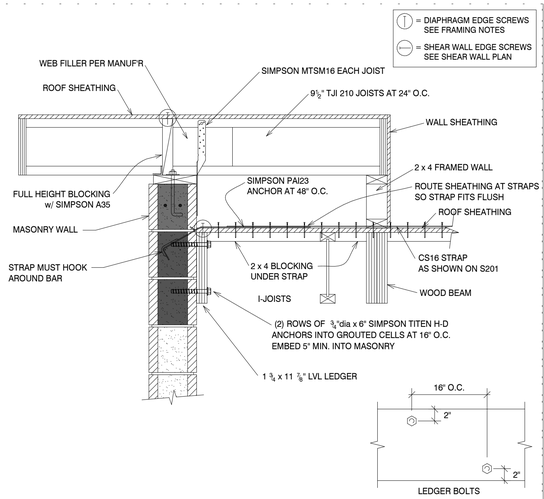

10 S4.1 CONSTRUCTION DETAIL
NO SCALE

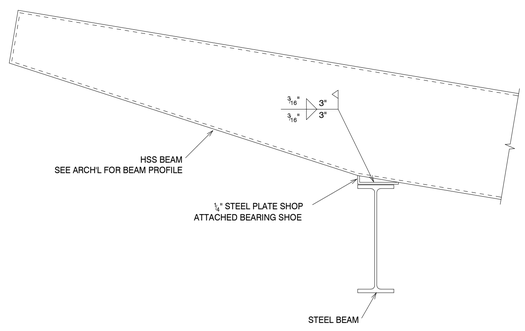

7 S4.1 CONSTRUCTION DETAIL
NO SCALE

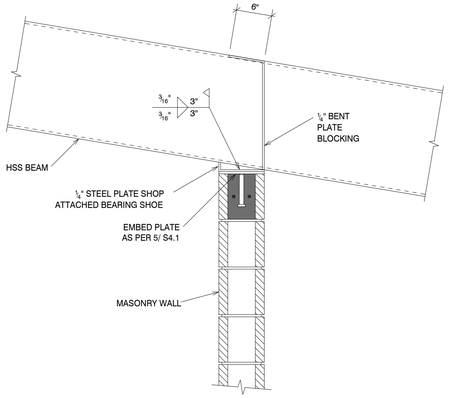

4 S4.1 CONSTRUCTION DETAIL
NO SCALE

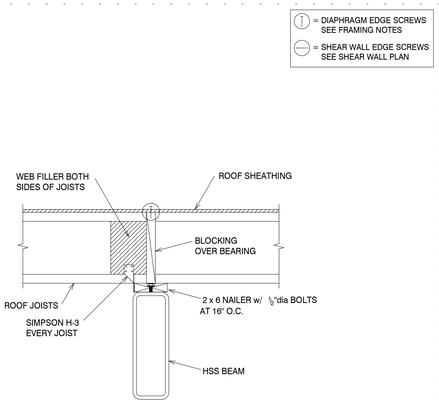

1 S4.1 CONSTRUCTION DETAIL
NO SCALE

11 S4.1 CONSTRUCTION DETAIL
NO SCALE

8 S4.1 CONSTRUCTION DETAIL
NO SCALE

5 S4.1 CONSTRUCTION DETAIL
NO SCALE

2 S4.1 CONSTRUCTION DETAIL
NO SCALE

12 S4.1 CONSTRUCTION DETAIL
NO SCALE

9 S4.1 CONSTRUCTION DETAIL
NO SCALE

6 S4.1 CONSTRUCTION DETAIL
NO SCALE

3 S4.1 CONSTRUCTION DETAIL
NO SCALE

blu line designs
planning | landscape architecture | design
8719 S. Sandy Parkway
Sandy, UT 84070
p 801.679.3157

CLIENT
FARMINGTON CITY
CONTACT: SYLVIA CLARK
PH: 801.939.9295
EMAIL: SCLARK@FARMINGTON.UTAH.GOV

WPA Architecture
1535 N FREEDOM BLVD, STE 360
PROVO, UTAH 84604
801.374.0800
info@wpa-architecture.com

IVY ACRES PARK

1397 WEST COOK LANE
FARMINGTON, UTAH

REVISIONS

NO.	APPROVAL	DESCRIPTION

Stamp
PROFESSIONAL ENGINEER NO. 10629778 BRADY R. ELLIS 3-6-24 STATE OF UTAH

Designed By:	BRE
Drawn By:	MN
Date:	03.06.2024
Checked By:	BRE
Project No:	181023

Drawing Title
Construction Details

SCALE: AS SHOWN

Drawing number
S4.1

100 PERCENT SET

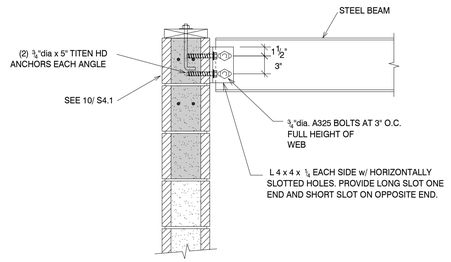

4 S4.2 CONSTRUCTION DETAIL
NO SCALE

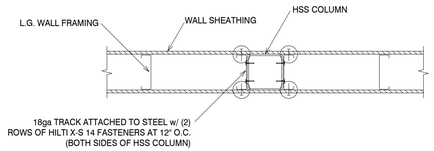

MID WALL CONDITION

= DIAPHRAGM EDGE SCREWS SEE FRAMING NOTES
= SHEAR WALL EDGE SCREWS SEE SHEAR WALL PLAN

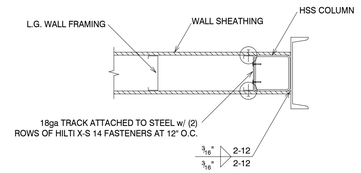

END WALL CONDITION

1 S4.2 CONSTRUCTION DETAIL
NO SCALE

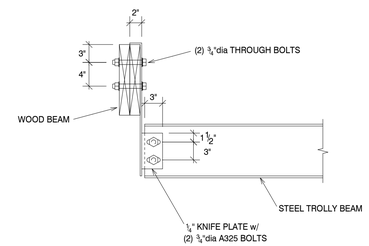

5 S4.2 CONSTRUCTION DETAIL
NO SCALE

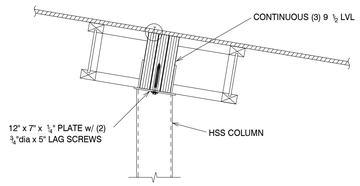

GRID 'A' CONDITION

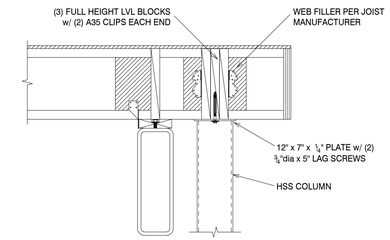

GRIDS 1 and 3 CONDITION

2 S4.2 CONSTRUCTION DETAIL
NO SCALE

= DIAPHRAGM EDGE SCREWS SEE FRAMING NOTES
= SHEAR WALL EDGE SCREWS SEE SHEAR WALL PLAN

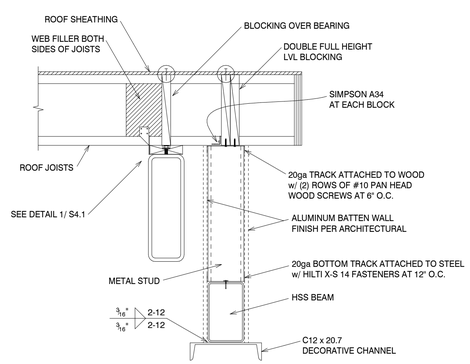

3 S4.2 CONSTRUCTION DETAIL
NO SCALE

100 PERCENT SET

blu line designs
planning | landscape architecture | design
8719 S. Sandy Parkway
Sandy, UT 84070
p 801.679.3157

CLIENT
FARMINGTON CITY
CONTACT: SYLVIA CLARK
PH: 801.939.9295
EMAIL: SCLARK@FARMINGTON.UTAH.GOV

WPA Architecture
1535 N FREEDOM BLVD, STE 360
PROVO, UTAH 84604
801.374.0800
info@wpa-architecture.com

IVY ACRES PARK

1397 WEST COOK LANE
FARMINGTON, UTAH

REVISIONS

NO.	APPROVED	DESCRIPTION

Stamp
PROFESSIONAL ENGINEER
NO. 8362277
BRAD R. ELLIS
3-6-24
STATE OF UTAH

Designed By:	BRE
Drawn By:	MN
Date:	03.06.2024
Checked By:	BRE
Project No:	181023

Drawing Title

Construction Details

SCALE: AS SHOWN

Drawing number

S4.2

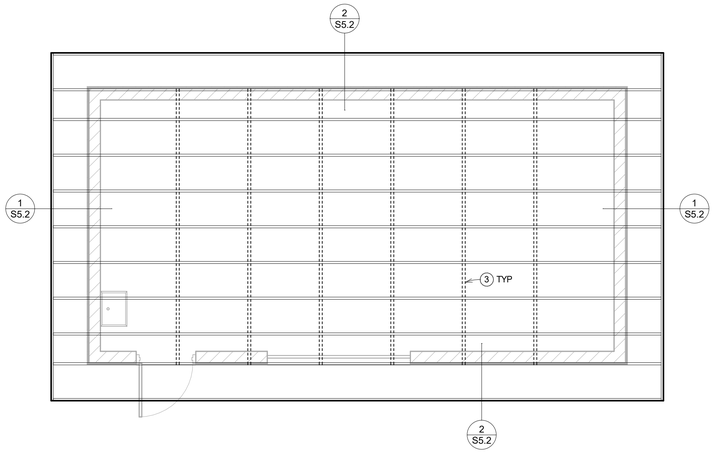

2 ROOF FRAMING PLAN
1/4" = 1'-0"

ROOF FRAMING NOTES

1. FRAME ROOF w/ PREMANUFACTURED ROOF TRUSSES AT 24" O.C.
2. SEE S0.1 FOR ROOF SHEATHING REQUIREMENTS
3. SIMPSON CS16 STRAP and BLOCKING AT TRUSS BOTTOM CHORDS AT 4'-0" O.C. SEE DETAIL 2/ S5.2

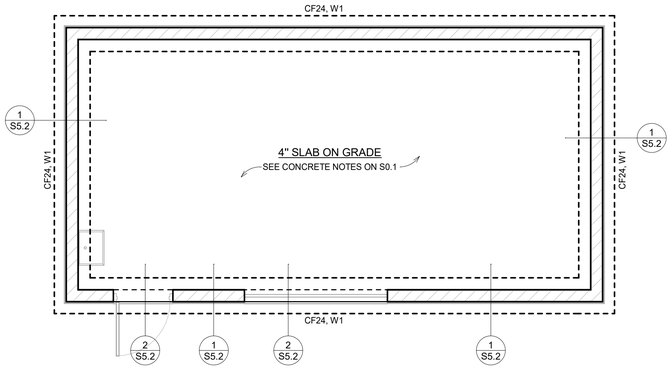

1 FOUNDATION PLAN
1/4" = 1'-0"

FOUNDATION NOTES

1. SEE S1.1 FOR FOOTING and FOUNDATION SCHEDULES
2. PROVIDE CONTROL JOINTS AT 10'-0" O.C. MAX. SEE DETAIL 3/ S5.2

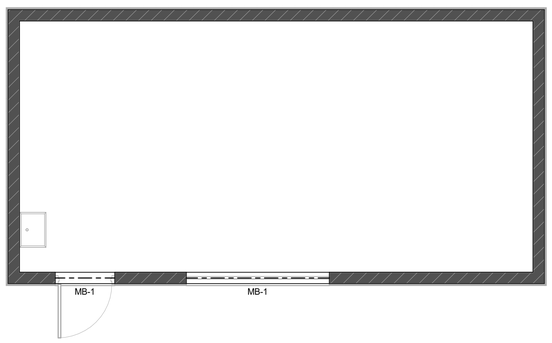

3 MASONRY WALL PLAN
1/4" = 1'-0"

MASONRY PLAN NOTES

1. SEE S0.3 FOR MASONRY BEAM and WALL SCHEDULES and DETAILS
2. ALL WALLS ARE MW-1

blu line designs
planning | landscape architecture | design

8719 S. Sandy Parkway
Sandy, UT 84070
p 801.679.3157

CLIENT

FARMINGTON CITY
CONTACT: SYLVIA CLARK
PH: 801.939.9295
EMAIL:
SCLARK@FARMINGTON.UTAH.GOV

FARMINGTON

WPA Architecture
1535 N FREEDOM BLVD, STE 360
PROVO, UTAH 84604
801.374.0800
info@wpa-architecture.com

100 PERCENT SET

IVY ACRES PARK

1397 WEST COOK LANE
FARMINGTON, UTAH

REVISIONS

NO.	APPROVED	DESCRIPTION

Stamp

PROFESSIONAL ENGINEER
NO. 8628
BRAD R. ELLIS
3-6-24
STATE OF UTAH

Designed By:	BRE
Drawn By:	MN
Date:	03.06.2024
Checked By:	BRE
Project No:	431023

Drawing Title

Structural Plans

SCALE: AS SHOWN

Drawing number

S5.1

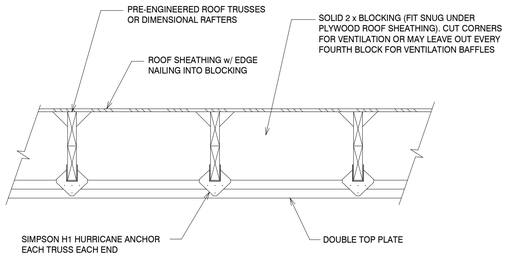

7 S5.2 CONSTRUCTION DETAIL
NO SCALE

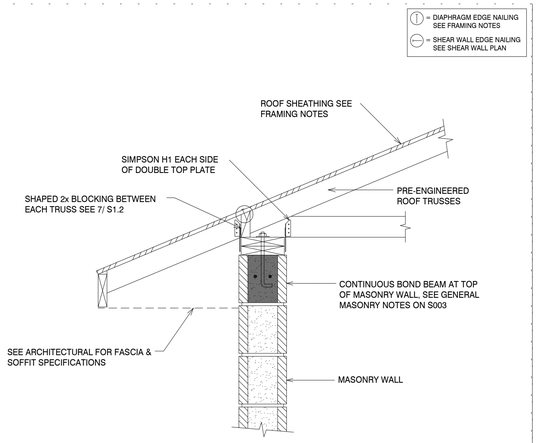

4 S5.2 CONSTRUCTION DETAIL
NO SCALE

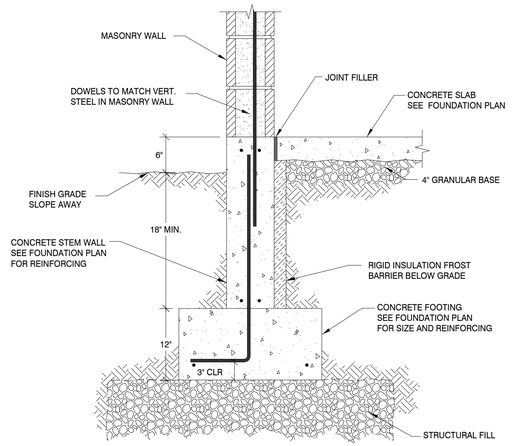

1 S5.2 CONSTRUCTION DETAIL
NO SCALE

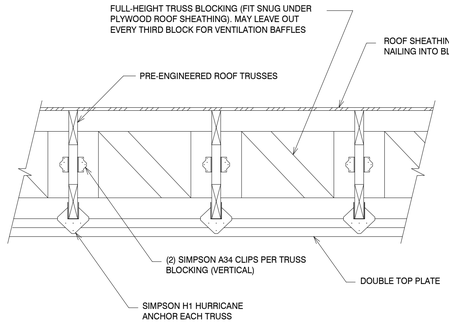

8 S5.2 CONSTRUCTION DETAIL
NO SCALE

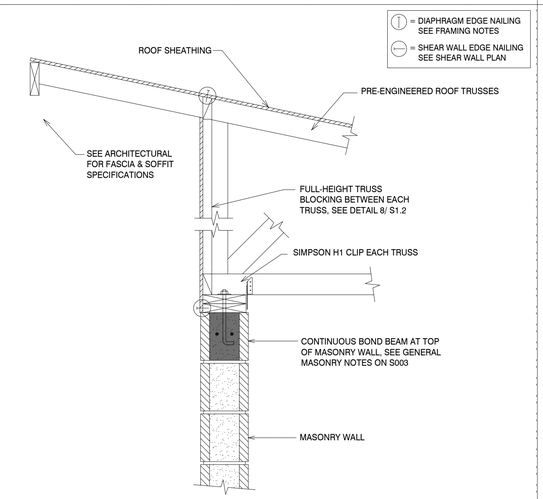

5 S5.2 CONSTRUCTION DETAIL
NO SCALE

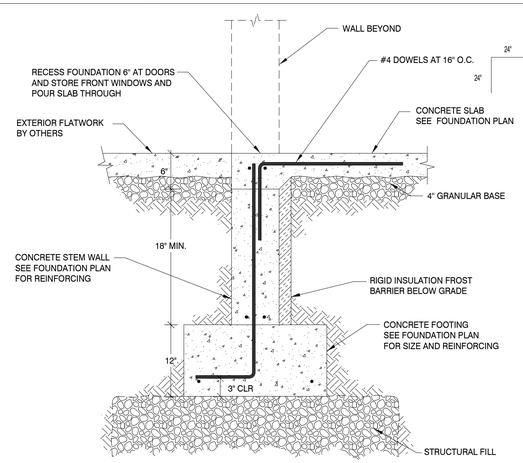

2 S5.2 CONSTRUCTION DETAIL
NO SCALE

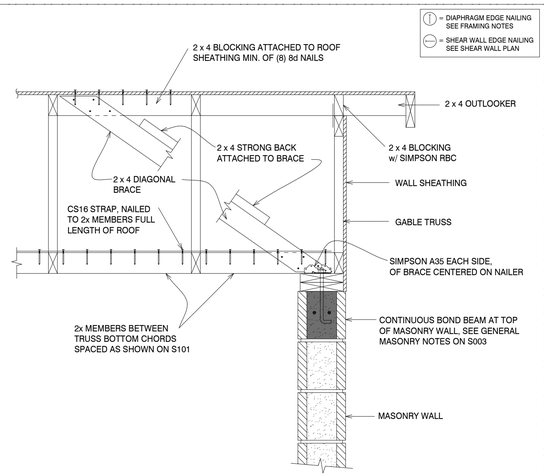

6 S5.2 CONSTRUCTION DETAIL
NO SCALE

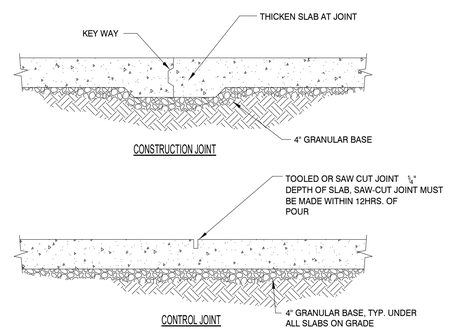

PROVIDE CONTROL JOINTS AT APPROX. 10'-0" EACH WAY
PROVIDE ESPECIALLY AT CORNERS, COLUMN
LOCATIONS AND TRANSITIONS IN SLAB THICKNESS

3 S5.2 CONSTRUCTION DETAIL
NO SCALE

100 PERCENT SET

blu line designs
planning | landscape architecture | design
8719 S. Sandy Parkway
Sandy, UT 84070
p 801.679.3157

CLIENT

FARMINGTON CITY
CONTACT: SYLVIA CLARK
PH: 801.939.9295
EMAIL:
SCLARK@FARMINGTON.UTAH.GOV

FARMINGTON

WPA Architecture
1535 N FREEDOM BLVD, STE 360
PROVO, UTAH 84604
801.374.0800
info@wpa-architecture.com

IVY ACRES PARK

1397 WEST COOK LANE
FARMINGTON, UTAH

REVISIONS

NO.	APPROVED	DESCRIPTION

Stamp

PROFESSIONAL ENGINEER
NO. 10162877
BRADY R. ELLIS
3-6-24
STATE OF UTAH

Designed By:	BRE
Drawn By:	MN
Date:	03.06.2024
Checked By:	BRE
Project No:	431023

Drawing Title

Construction Details

SCALE: AS SHOWN

Drawing number

S5.2

SYMBOL LEGEND - PIPING

NOTE: ALL ABBREVIATIONS MAY NOT BE USED.

SYMBOL	DESCRIPTION
	SHUT OFF VALVE
	GATE VALVE
	CHECK VALVE
	AUTOMATIC 2-WAY VALVE
	AUTOMATIC 3-WAY VALVE
	GLOBE VALVE
	BALL VALVE
	RELIEF VALVE
	PRESSURE REDUCING VALVE
	BUTTERFLY VALVE
	SOLENOID VALVE
	ANGLE VALVE
	VENTURI VALVE
	BALANCING OR PLUG COCK
	FLOW SETTER
	EXPANSION VALVE
	GAS COCK
MAV	MANUAL AIR VENT
	STRAINER
	GAUGE COCK
	FLEXIBLE CONNECTION
	PRESSURE GAUGE
	THERMOMETER
	PIPE REDUCER
	REFRIGERANT SITE GLASS
	REFRIGERANT STRAINER
	REFRIGERANT FILTER DRIER
	90 DEGREE ELBOW UP
	90 DEGREE ELBOW DOWN
	90 DEGREE TEE UP
	90 DEGREE TEE DOWN
	PIPE UNION
	PIPE CAP
	PIPE ANCHOR
	FLOAT AND THERMOSTATIC TRAP

SYMBOL LEGEND - MISC

REFERENCE LINES AND SYMBOLS

SYMBOL	DESCRIPTION
- / ---	VIEW OR DETAIL INDICATOR: # INDICATES DETAIL NUMBER, SHEET INDICATES DRAWING SHEET WHERE VIEW OR DETAIL IS SHOWN.
- / ---	ELEVATION OR SECTION INDICATOR: # INDICATES VIEW NUMBER, SHEET INDICATES DRAWING SHEET WHERE VIEW IS SHOWN.
NAME ####	ROOM / SPACE INDICATOR
#	KEYNOTE INDICATOR
#/	REVISION INDICATOR
XX-##	PLUMBING FIXTURE INDICATOR
XX-##	EQUIPMENT INDICATOR
TAG / CFM	REGISTER, GRILLE, OR DIFFUSER INDICATOR
OR	BREAKLINE
MATCH LINE SEE XX/XXX	MATCHLINE INDICATOR
	CONTRACT LIMIT LINE: DASHDOT, WIDE LINE
	NEW CONNECTION TO EXISTING
	POINT OF DEMOLITION

SYMBOL LEGEND - DUCTWORK

NOTE: ALL ABBREVIATIONS MAY NOT BE USED.

SYMBOL	DESCRIPTION
	RECTANGULAR SUPPLY DUCT UP
	RECTANGULAR SUPPLY DUCT DOWN
	RECTANGULAR RETURN DUCT UP
	RECTANGULAR RETURN DUCT DOWN
	RECTANGULAR EXHAUST DUCT UP
	RECTANGULAR EXHAUST DUCT DOWN
	ROUND SUPPLY DUCT UP
	ROUND SUPPLY DUCT DOWN
	ROUND RETURN DUCT UP
	ROUND RETURN DUCT DOWN
	ROUND EXHAUST DUCT UP
	ROUND EXHAUST DUCT DOWN
	OVAL SUPPLY DUCT UP
	OVAL SUPPLY DUCT DOWN
	OVAL RETURN DUCT UP
	OVAL RETURN DUCT DOWN
	OVAL EXHAUST DUCT UP
	OVAL EXHAUST DUCT DOWN
	SPIRAL OVAL DUCT
	SPIRAL ROUND DUCT
	DUCT INSULATION
	DUCT LINING
	90° RECTANGULAR ELBOW WITH TURNING VANES
	90° ROUND RADIUS ELBOW
	GORED OVAL RADIUS ELBOW
	DUCT SIZE OR SHAPE TRANSITION
	DUCT TO BE DEMOLISHED

PIPING LEGEND

NOTE: ALL ABBREVIATIONS MAY NOT BE USED.

ABBREVIATION	DESCRIPTION
CHWR	CHILLED WATER RETURN
CHWS	CHILLED WATER SUPPLY
CA	COMPRESSED AIR
CD	CONDENSATE DRAIN
C02	CARBON DIOXIDE
CWR	CONDENSER WATER RETURN
CWS	CONDENSER WATER SUPPLY
FP	FIRE PROTECTION
FOR	FUEL OIL RETURN
FOS	FUEL OIL SUPPLY
FOV	FUEL OIL VENT
GR	GLYCOL RETURN
GS	GLYCOL SUPPLY
HPC	HIGH PRESSURE CONDENSATE
MPC	MEDIUM PRESSURE CONDENSATE
LPC	LOW PRESSURE CONDENSATE
HPS	HIGH PRESSURE STEAM
MPS	MEDIUM PRESSURE STEAM
LPS	LOW PRESSURE STEAM
HHWR	HEATING HOT WATER RETURN
HHWS	HEATING HOT WATER SUPPLY
LPG	LIQUID PROPANE GAS
LPS	LOW PRESSURE STEAM
MA	MEDICAL AIR
NG	NATURAL GAS
NO	NITROUS OXIDE
O	OXYGEN
PC	PUMPED CONDENSATE
RG	REFRIGERANT GAS
RL	REFRIGERANT LIQUID
SMR	SNOW MELT RETURN
SMS	SNOW MELT SUPPLY
VAC	VACUUM

SYMBOL LEGEND - MECH

NOTE: ALL ABBREVIATIONS MAY NOT BE USED.

SYMBOL	DESCRIPTION
	SQUARE OR RECTANGULAR SUPPLY DIFFUSER
	SQUARE OR RECTANGULAR RETURN DIFFUSER
	SQUARE OR RECTANGULAR EXHAUST DIFFUSER
	ROUND DIFFUSER
	LINEAR SLOT GRILLE OR DIFFUSER
	FLEXIBLE DUCT
	SIDEWALL GRILLE OR REGISTER
	DUCT HIGH EFFICIENCY TAKE OFF WITH BALANCING DAMPER
	BALANCING DAMPER
	FIRE DAMPER
F	FIRE / SMOKE COMBINATION DAMPER
T S H	THERMOSTAT - SENSOR - HUMIDISTAT

ABBREVIATIONS

NOTE: ALL ABBREVIATIONS MAY NOT BE USED.

(E)	EXISTING
(F)	FUTURE
AC	AIR CONDITION(-ING,-ED)
APD	AIR PRESSURE DROP
BD	BALANCING DAMPER
BHP	BRAKE HORSE POWER
BTU	BRITISH THERMAL UNIT
BTUH	BTU/HOUR
CFH	CUBIC FEET PER HOUR
CFM	CUBIC FEET PER MINUTE
CV	CONTROL VALVE
DB	DRY BULB TEMPERATURE
DCW	DOMESTIC COLD WATER
DHW	DOMESTIC HOT WATER
DHWR	DOMESTIC HOT WATER RECIRC
DP	DEPTH, DEEP, OR DROP IN PRESSURE
EA	EXHAUST AIR
EER	ENERGY EFFICIENCY RATIO
EFF	EFFICIENCY
ELEC	ELECTRIC
ELEV	ELEVATION
ENT	ENTERING
EVAP	EVAPORATI(-E, -ING, -ED, -OR)
EWT	ENTERING WATER TEMPERATURE
EXT	EXTERNAL
FD	FIRE DAMPER
FLA	FULL LOAD AMPS
FPI	FINS PER INCH
FPM	FEET PER MINUTE
FPS	FEET PER SECOND
FSD	FIRE SMOKE DAMPER
GE	GREASE EXHAUST
GPH	GALLONS PER HOUR
GPM	GALLONS PER MINUTE
HD	HEAD
HG	MERCURY
HP	HORSEPOWER
HR	HOUR
HTG	HEATING
HZ	HERTZ (FREQUENCY)
IN	INCH
KW	KILOWATT
LAT	LEAVING AIR TEMPERATURE
LBS	POUNDS
LH	LATENT HEAT
LRA	LOCKED ROTOR AMPS
LVG	LEAVING
LWT	LEAVING WATER TEMPERATURE
MBH	THOUSAND BTU PER HOUR
MCA	MINIMUM CIRCUIT AMPS
MFR	MANUFACTUR(-ER, -ED)
NC	NORMALLY CLOSED OR NOISE CRITERIA
NIC	NOT IN CONTRACT
NO	NORMALLY OPEN
NPSH	NET POSITIVE SUCTION HEAD
NTS	NOT TO SCALE
OA	OUTSIDE AIR
OD	OUTSIDE DIAMETER
OZ	OUNCE
PD	PRESSURE DROP OR DIFFERENCE
PG	PROPOLENE GLYCOL
PH	PHASE
PPM	PARTS PER MILLION
PSF	POUNDS PER SQUARE FOOT
PSI	POUNDS PER SQUARE INCH
PSIA	PSI ABSOLUTE
PSIG	PSI GAUGE
RA	RETURN AIR
RECIRC	RECIRCULATE (-ER, -ED, -ING)
REFR	REFRIGERATION
REQD	REQUIRED
RLA	RATED LOAD AMPS
RPM	REVOLUTIONS PER MINUTE
SA	SUPPLY AIR
SCFM	STANDARD CUBIC FEET PER MINUTE
SCW	SOFT COLD WATER
SH	SENSIBLE HEAT
SP	STATIC PRESSURE
SPEC(S)	SPECIFICATION(S)
SQ	SQUARE
STD	STANDARD
SW	SOIL, WASTE
TA(R)	TRANSFER AIR (RETURN)
TA(S)	TRANSFER AIR (SUPPLY)
TD	TEMP. DROP OR DIFF.
TEMP	TEMPERATURE
TOT	TOTAL
TSTAT	THERMOSTAT
V	VOLT, VOLTAGE OR VENT
VAC	VACUUM
VAV	VARIABLE AIR VOLUME
VEL	VELOCITY
VENT	VENT, VENTILATION
VERT	VERTICAL
VFD	VARIABLE FREQUENCY DRIVE
VOL	VOLUME
VTR	VENT THROUGH ROOF
WB	WET BULB TEMP
WC	WATER COLUMN
WG	WATER GAUGE
WPD	WATER PRESSURE DROP
WTR	WATER

MECHANICAL GENERAL NOTES

1. THE MECHANICAL DRAWINGS SHOW THE GENERAL DESIGN, ARRANGEMENT, & EXTENT OF THE MECHANICAL SYSTEM. BECAUSE OF THE SMALL SCALE OF THE DRAWINGS, THESE DRAWINGS DO NOT SHOW ALL OFFSETS, BENDS, OR ELBOWS NECESSARY FOR THE COMPLETE INSTALLATION IN THE SPACE PROVIDED. CONTRACTOR SHALL MAKE ALTERATIONS AS MAY BE NECESSARY TO MAKE THE SYSTEM COMPLETE & OPERATIONAL IN ACCORDANCE WITH THE DESIGN INTENT.
2. MAJOR DEVIATIONS SUCH AS CHANGES IN SIZES, WEIGHTS, QUANTITIES, OR MATERIAL REQUIRE PRIOR APPROVAL BY THE DESIGN ENGINEER.
3. THE DRAWINGS & SPECIFICATIONS HAVE BEEN PREPARED TO SUPPLEMENT EACH OTHER & SHALL BE INTERPRETED AS AN INTEGRAL UNIT WITH THE ITEMS SHOWN ON ONE & NOT THE OTHER BEING FURNISHED & INSTALLED AS THOUGH SHOWN AND CALLED OUT IN BOTH DOCUMENTS.
4. THE ENTIRE MECHANICAL INSTALLATION SHALL CONFORM TO THE REQUIREMENTS OF THE MOST RECENTLY ADOPTED BUILDING CODES, MECHANICAL CODE, PLUMBING CODE, ELECTRICAL CODE, & ALL OTHER APPLICABLE CITY, COUNTY, STATE, & FEDERAL CODES & REGULATIONS IN EFFECT.
5. THE ENTIRE MECHANICAL INSTALLATION SHALL CONFORM TO ALL CODES, RULES, REGULATIONS, & REQUIREMENTS OF THE BUILDING OWNER.
6. ALL MECHANICAL COMPONENTS AND EQUIPMENT SHALL BE INSTALLED TO CONFORM WITH ANY APPLICABLE LOCAL SEISMIC REQUIREMENTS.
7. PRIOR TO FABRICATION & INSTALLATION OF ANY MECHANICAL COMPONENT THE CONTRACTOR SHALL COORDINATE THE INSTALLATION OF ALL MECHANICAL WORK WITH ALL OTHER BUILDING TRADES, INCLUDING BUILDING TRADES HIRED DIRECTLY BY THE OWNER. WHERE CONFLICTS MAY OCCUR, THEY SHALL BE RESOLVED PRIOR TO INSTALLATION.
8. VERIFY ALL REQUIRED SERVICE CONNECTIONS, INCLUDING ELECTRICAL CHARACTERISTICS, FOR ALL EQUIPMENT PRIOR TO ORDERING OR FABRICATING MECHANICAL EQUIPMENT AND COMPONENTS.
9. THE SPACE ABOVE CEILINGS IS LIMITED. CAREFUL COORDINATION IS REQUIRED WITH ALL TRADES BEFORE ANY PIPE, DUCT, OR EQUIPMENT IS ORDERED &/OR INSTALLED. ANY CONFLICTS &/OR CHANGES FOUND DURING INSTALLATION THAT RESULTS FROM THE LACK OF COORDINATION BY THE CONTRACTORS DURING THE SHOP DRAWING PROCESS ARE THE RESPONSIBILITY OF THE CONTRACTOR.
10. ALL MECHANICAL INFORMATION IS NOT SHOWN ON THE MECHANICAL DRAWINGS. THE CONTRACTOR SHALL BE RESPONSIBLE FOR COORDINATION OF ALL INFORMATION ON ALL OTHER CONSTRUCTION DOCUMENTS.
11. THE CONTRACTOR SHALL BE RESPONSIBLE TO REVIEW & USE, WHERE APPROPRIATE, ALL THE MECHANICAL DETAILS SHOWN ON THE DRAWINGS. DETAILS MAY OR MAY NOT BE CALLED OUT ON THE DRAWINGS WITH SYMBOLS OR KEYED NOTES. ANY CHANGES RESULTING FROM FAILURE TO INSTALL THE MECHANICAL SYSTEM WITHOUT USING THE INCLUDED DETAILS SHALL BE THE RESPONSIBILITY OF THE CONTRACTOR.
12. ALL EQUIPMENT SHALL BE INDEPENDENTLY SUPPORTED FROM STRUCTURAL MEMBERS. STRUCTURAL ELEMENTS SHOWN IN DETAILS MAY OR MAY NOT PERTAIN TO ANY PORTION OF THE BUILDING. COORDINATE ALL MOUNTING REQUIREMENTS WITH ARCHITECTURAL & STRUCTURAL DRAWINGS AND SPECIFICATIONS.
13. ALL MECHANICAL COMPONENTS AND EQUIPMENT SHALL BE INSTALLED IN ACCORDANCE WITH ALL MANUFACTURER RECOMMENDATIONS.
14. ALL SIMILAR EQUIPMENT SHALL BE OF THE SAME MANUFACTURER. AIR INLETS & OUTLETS OF SIMILAR TYPES SHALL BE OF THE SAME MANUFACTURER.
15. ANY PART OF THE MECHANICAL INSTALLATION THAT FAILS, IS DEEMED UNFIT, OR BECOMES DAMAGED DURING CONSTRUCTION SHALL BE REPAIRED OR REPLACED BY THE CONTRACTOR AT NO ADDITIONAL COST TO THE OWNER. THE CONTRACTOR SHALL BE RESPONSIBLE FOR EQUIPMENT CHECK-IN, SAFEKEEPING, & DAMAGE.
16. COORDINATE WITH ARCHITECTURAL REFLECTED CEILING PLAN FOR EXACT LOCATION OF ALL CEILING DIFFUSERS & GRILLES.
17. CONTRACTOR SHALL OPERATE INSTALLED &/OR MODIFIED SYSTEMS & DEMONSTRATE ALL ASPECTS OF THE SYSTEM TO THE ENGINEER &/OR OWNER TO PROVE ALL ASSOCIATED SYSTEMS ARE OPERATIONAL.
18. DURING CONSTRUCTION THE CONTRACTOR SHALL MAINTAIN A SET OF AS-BUILT REDLINED RECORD DRAWINGS AT THE PROJECT SITE. ALL CHANGES OR DEVIATIONS IN LAYOUT, ROUTING, EQUIPMENT, COMPONENTS, & ACCESSORIES SHALL BE RECORDED. THESE REDLINED DRAWINGS SHALL BE GIVEN TO THE ARCHITECT / ENGINEER AFTER THE FINAL INSPECTION IN ACCORDANCE WITH PROJECT SPECIFICATIONS.
19. ALL DUCT ELBOWS SHALL BE LONG RADIUS, UNLESS NOTED OTHERWISE.
20. PROVIDE OPERATION AND MAINTENANCE MANUALS (O&M) WITHIN 30 DAYS OF CERTIFICATE OF OCCUPANCY FOR ALL EQUIPMENT IN DIGITAL FORMAT TO ENGINEER FOR REVIEW. O&M'S SHALL INCLUDE DOCUMENTATION OF ALL WARRANTIES, REPORTS AND TESTS, RECORD DRAWINGS, CONTROLS SEQUENCE OF OPERATIONS WITH DIAGRAMS, & EQUIPMENT INFORMATION. EQUIPMENT INFORMATION INCLUDES MAKE & MODEL, WIRING, PIPING, STARTUP, SHUTDOWN, TROUBLE SHOOTING SYSTEM BALANCING REPORT, FINAL COMMISSIONING REPORT AND MAINTENANCE PROCEDURES.

DEFINITIONS

NOTE: ALL DEFINITIONS MAY NOT BE USED.

INDICATED: THE TERM "INDICATED" REFERS TO GRAPHIC REPRESENTATIONS, NOTES, OR SCHEDULES ON THE DRAWINGS, OTHER PARAGRAPHS OR SCHEDULES IN THE SPECIFICATIONS, AND SIMILAR REQUIREMENTS IN THE CONTRACT DOCUMENTS. WHERE TERMS SUCH AS "SHOWN", "NOTED", "SCHEDULED", AND "SPECIFIED" ARE USED, IT IS TO HELP THE READER LOCATE THE REFERENCE, NO LIMITATION ON LOCATION IS INTENDED.

DIRECTED: TERMS SUCH AS "DIRECTED", "REQUESTED", AUTHORIZED", "SELECTED", "APPROVED", "REQUIRED", AND "PERMITTED" MEAN "DIRECTED BY THE ENGINEER", "REQUESTED BY THE ENGINEER", AND SIMILAR PHRASES.

APPROVED: THE TERM "APPROVED", WHERE USED IN CONJUNCTION WITH THE ENGINEER'S ACTION ON THE CONTRACTOR'S SUBMITTALS, APPLICATIONS, AND REQUESTS, IS LIMITED TO THE ENGINEER'S DUTIES AND RESPONSIBILITIES AS STATED IN GENERAL AND SUPPLEMENTARY CONDITIONS.

FURNISH: THE TERM "FURNISH" IS USED TO MEAN "SUPPLY AND DELIVER TO THE PROJECT SITE, READY FOR UNLOADING, UNPACKING, ASSEMBLY, INSTALLATION, AND SIMILAR OPERATIONS."

INSTALL: THE TERM "INSTALL" IS USED TO DESCRIBE OPERATIONS AT PROJECT SITE INCLUDING THE ACTUAL "UNLOADING, UNPACKING, ASSEMBLY, ERECTION, PLACING, ANCHORING, APPLYING, WORKING TO DIMENSION, FINISHING, CURING, PROTECTING, CLEANING, AND SIMILAR OPERATIONS."

PROVIDE: THE TERM "PROVIDE" MEANS "TO FURNISH AND INSTALL, COMPLETE AND READY FOR THE INTENDED USE."

INSTALLER: AN "INSTALLER" IS THE CONTRACTOR OR AN ENTITY ENGAGED BY THE CONTRACTOR, EITHER AS AN EMPLOYEE, SUBCONTRACTOR, OR SUB-SUBCONTRACTOR, FOR PERFORMANCE OF A PARTICULAR CONSTRUCTION ACTIVITY, INCLUDING INSTALLATION, ERECTION, APPLICATION, AND SIMILAR OPERATIONS. INSTALLERS ARE REQUIRED TO BE EXPERIENCED IN THE OPERATIONS THEY ARE ENGAGED TO PERFORM.

MECHANICAL SHEET INDEX

M0.1	**MECHANICAL COVER SHEET**
M5.1	**MECHANICAL DETAILS**
M5.2	**MECHANICAL DETAILS**
M6.1	**MECHANICAL SCHEDULES**
MH1.1	**LEVEL 1 MECHANICAL PLAN**
MH1.2	**ROOF MECHANICAL PLAN**

blu line designs
planning | landscape architecture | design
8719 S. Sandy Parkway
Sandy, UT 84070
p 801.679.3157

CLIENT

WPA Architecture
475 N FREEDOM BLVD
PROVO, UTAH 84601
801.374.0800
bfallon@wpa-architecture.com

SPECTRUM ENGINEERS
324 S. State St., Suite 400
Salt Lake City, UT 84111
800-678-7077
801-328-5151
fax: 801-328-5155
www.spectrum-engineers.com

IVY ACRES PARK

1397 WEST COOK LANE
FARMINGTON, UTAH

REVISIONS

NO.	APPROVAL	DESCRIPTION

Stamp

LICENSED PROFESSIONAL ENGINEER
No. 13438797
TYLER M. ANDERSON
10.06.2024
STATE OF UTAH

Designed By:	TMA
Drawn By:	TMA
Date:	2024.03.06
Checked By:	VJF
Project No:	22-246

Drawing Title

MECHANICAL COVER SHEET

Drawing number

M0.1

100 PERCENT SET

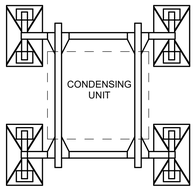

PLAN VIEW

NOTE:
MOUNT AND INSTALL PER ALL
MANUFACTURER RECOMMENDATIONS

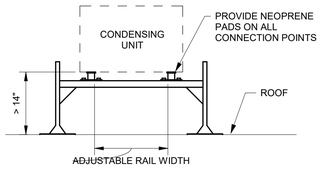

FRONT VIEW

NOTE:
PROVIDE WITH "MIRO INDUSTRIES (LD/HD)
ROOF SUPPORT SYSTEM" OR PRIOR APPROVED EQUAL

10 EQUIPMENT SUPPORT DETAIL - FOOTED

SCALE: NTS

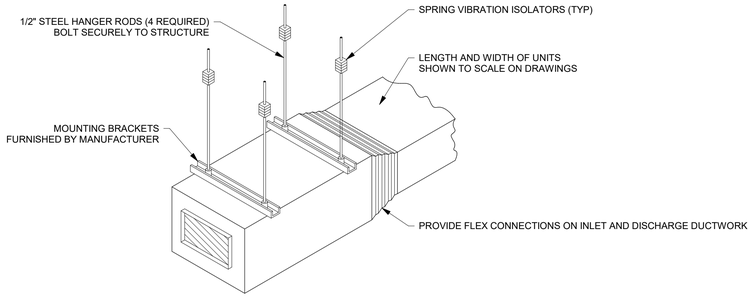

NOTE

1. PROVIDE SEISMIC RESTRAINTS AS REQUIRED

9 INLINE EXHAUST FAN

SCALE: NTS

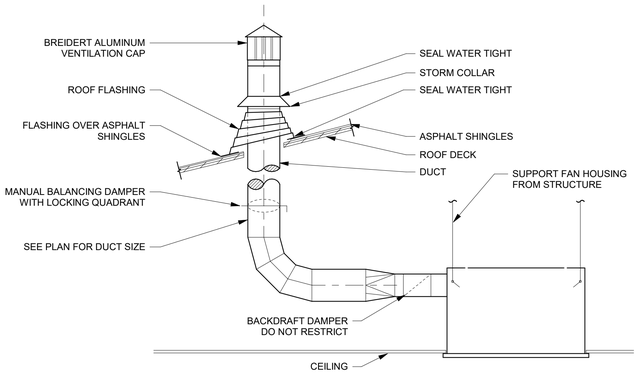

NOTE:
CEILING AND ROOF STRUCTURE SHOWN IS GENERIC.
COORDINATE WITH ARCHITECTURAL AND STRUCTURAL PLANS.

8 EXHAUST FAN DUCTED THRU SLOPED ROOF

SCALE: NTS

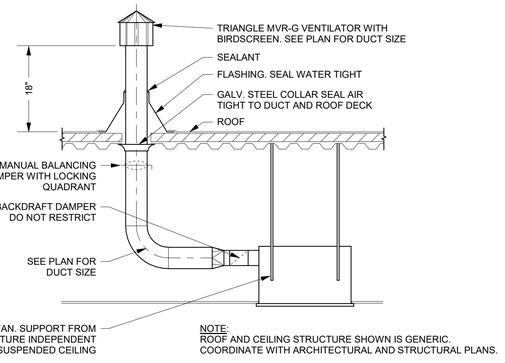

NOTE:
ROOF AND CEILING STRUCTURE SHOWN IS GENERIC.
COORDINATE WITH ARCHITECTURAL AND STRUCTURAL PLANS.

7 EXHAUST FAN DUCTED THRU ROOF DETAIL

SCALE: NTS

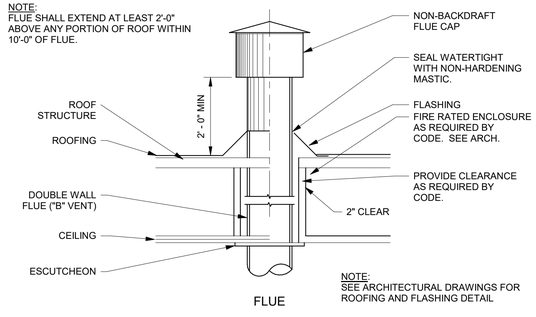

FLUE

6 FLUE THRU ROOF - CAP DETAIL

SCALE: NTS

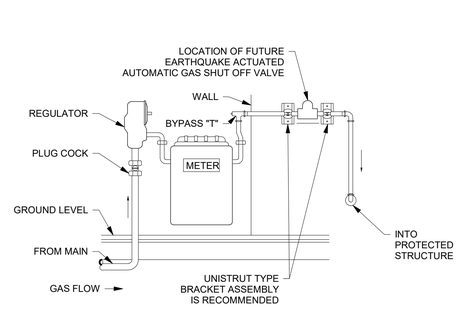

5 GAS METER

SCALE: NTS

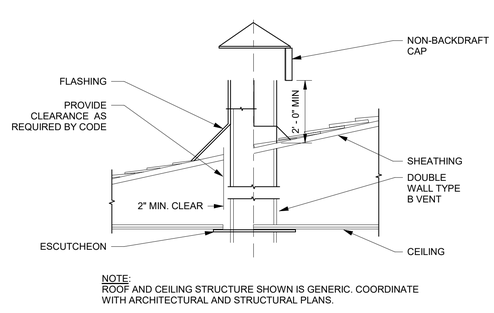

NOTE:
ROOF AND CEILING STRUCTURE SHOWN IS GENERIC. COORDINATE
WITH ARCHITECTURAL AND STRUCTURAL PLANS.

4 FLUE THRU ROOF

SCALE: NTS

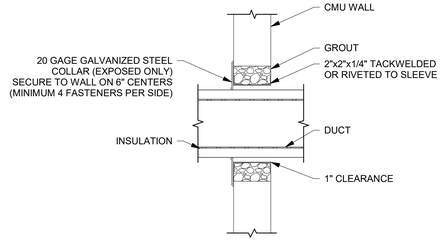

3 DUCT PENETRATION THROUGH CMU WALL

SCALE: NTS

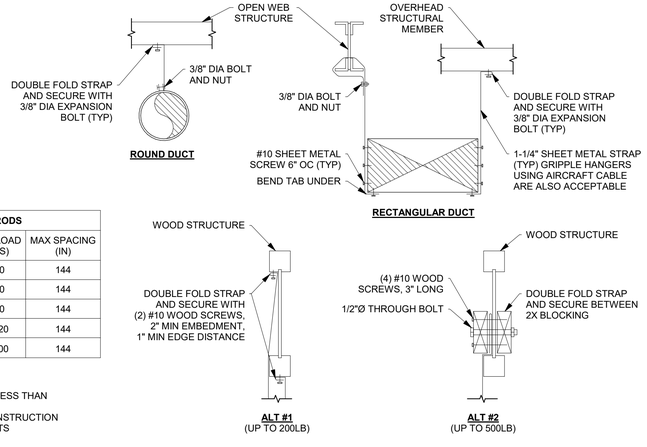

HANGER STRAPS OR RODS			
MAX DUCT (IN)	QUANTITY/ SIZE (IN)	MAX LOAD (LBS)	MAX SPACING (IN)
26	(1) 1 X 22 GA STRAP	260	144
36	(1) 1 X 18 GA STRAP	420	144
50	(1) 1 X 16 GA STRAP	700	144
60	(2) 3/8 RODS	1,320	144
84	(2) 1/2 RODS	2,500	144

NOTES:
1. USE SPECIFIED SPACING AND NOT LESS THAN ONE SUPPORT PER BRANCH
2. REFER TO SMACNA HVAC DUCT CONSTRUCTION STANDARDS FOR ALL REQUIREMENTS

2 DUCT HANGERS DETAIL

SCALE: NTS

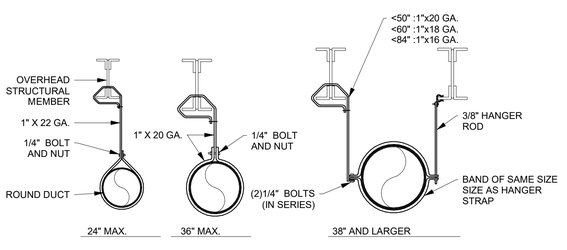

1 DUCT HANGERS - ROUND DETAIL

SCALE: NTS

blu line designs
planning | landscape architecture | design
8719 S. Sandy Parkway
Sandy, UT 84070
p 801.679.3157

CLIENT

WPA Architecture
475 N FREEDOM BLVD
PROVO, UTAH 84601
801.374.0800
bfallon@wpa-architecture.com

SPECTRUM ENGINEERS
324 S. State St., Suite 400
Salt Lake City, UT 84111
800-675-7077
801-328-5151
fax: 801-328-5155
www.spectrum-engineers.com

IVY ACRES PARK

1397 WEST COOK LANE
FARMINGTON, UTAH

REVISIONS

NO.	APPROVED	DESCRIPTION

Stamp

REGISTERED PROFESSIONAL ENGINEER
No. 13438797
TYLER M. ANDERSON
03.06.2024
STATE OF UTAH

Designed By:	TMA
Drawn By:	TMA
Date:	2024.03.06
Checked By:	VJF
Project No:	22-246

Drawing Title

MECHANICAL DETAILS

Drawing number

M5.1

100 PERCENT SET



1 VENTILATOR ROOF INTAKE DETAIL

SCALE: NTS

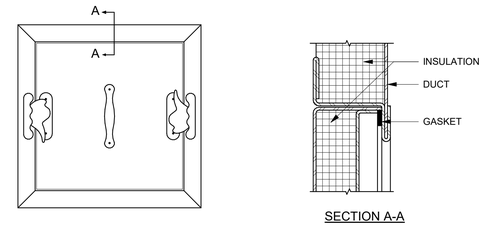

SECTION A-A

ACCESS PANEL

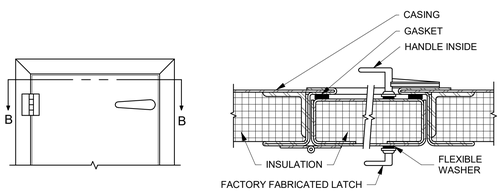

SECTION B-B

ACCESS DOOR

NOTES:
1 - LATCHES SHALL BE OF THE WEDGE TYPE TO CLOSE DOORS TIGHTLY
2 - HINGES ON THE ACCESS DOORS SHALL HAVE NON-CORROSIVE PINS
3 - USE ACCESS DOORS ON AIR HANDLING UNITS AND DUCTWORK INSTALLED IN EQUIPMENT ROOMS
4 - USE ACCESS PANELS ON ALL EQUIPMENT AND DUCTWORK INSTALLED ABOVE FINISHED CEILINGS

2 ACCESS PANEL / ACCESS DOOR

SCALE: NTS

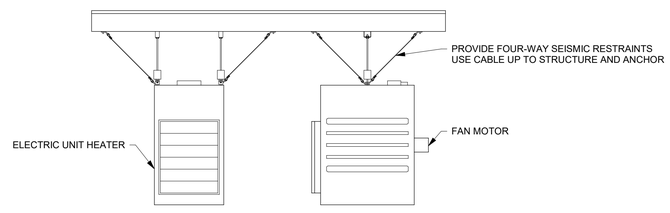

NOTE:

1. WHERE RODS PENETRATE CEILING CAULK WITH SILICONE SEALANT

3 UNIT HEATER

SCALE: NTS

blu line designs
planning | landscape architecture | design
8719 S. Sandy Parkway
Sandy, UT 84070
p 801.679.3157

CLIENT

WPA Architecture
475 N FREEDOM BLVD
PROVO, UTAH 84601
801.374.0800
bfallon@wpa-architecture.com

SPECTRUM ENGINEERS
324 S. State St., Suite 400
Salt Lake City, UT 84111
800-675-7077
801-328-5151
fax: 801-328-5155
www.spectrum-engineers.com

IVY ACRES PARK

1397 WEST COOK LANE
FARMINGTON, UTAH

REVISIONS

NO.	APPROVAL	DESCRIPTION

Stamp

REGISTERED PROFESSIONAL ENGINEER
No. 13435797
TYLER M. ANDERSON
03.06.2024
STATE OF UTAH

Designed By:	TMA
Drawn By:	TMA
Date:	2024.03.06
Checked By:	VJF
Project No:	22-246

Drawing Title

MECHANICAL DETAILS

Drawing number

M5.2

100 PERCENT SET

COMcheck Software Version COMcheckWeb

Mechanical Compliance Certificate

Project Information

Energy Code: 2021 IECC
Project Title: Farmington
Location: Farmington, Utah
Climate Zone: 5b
Project Type: New Construction

Construction Site: Owner/Agent: Designer/Contractor:

Additional Efficiency Package(s)

Credits: 10.0 Required 0.0 Proposed

Mechanical Systems List

Quantity System Type & Description

1 ODU-1/IDU-1 (Single Zone):
Heating: 1 each - Other, Electric, Capacity = 9 kBtu/h
No minimum efficiency requirement applies
Cooling: 1 each - Split System, Capacity = 8 kBtu/h, Air-Cooled Condenser, Unknown Economizer
Proposed Efficiency = 19.00 SEER2, Required Efficiency = 13.40 SEER2
Proposed Part Load Efficiency = 0.00 , Required Part Load Efficiency = 0.00
Fan System: FAN SYSTEM 1 | ODU-1/IDU-1 -- Compliance (Motor nameplate HP and fan efficiency method) : Passes

Fans:
FAN 1 Supply, Constant Volume, 300 CFM, 0.5 motor nameplate hp, 1.00 fan energy index

1 WH-1:
Gas Storage Water Heater, Capacity: 100 gallons, Input Rating: 150 kBtu/h w/ Circulation Pump
Proposed Efficiency: 98.00 % Et, Required Efficiency: 80.00 % Et

1 WH-2:
Gas Instantaneous Water Heater, Capacity: 3 gallons, Input Rating: 140 kBtu/h
No minimum efficiency requirement applies

Mechanical Compliance Statement

Compliance Statement: The proposed mechanical design represented in this document is consistent with the building plans, specifications, and other calculations submitted with this permit application. The proposed mechanical systems have been designed to meet the 2021 IECC requirements in COMcheck Version COMcheckWeb and to comply with any applicable mandatory requirements listed in the Inspection Checklist.

Tyler Anderson — Name - Title
Signature
2/23/24 — Date

CONDENSING UNIT SCHEDULE

ACCEPTABLE MANUFACTURERS:	REMARKS:	SCHEDULE KEY
CARRIER YORK TRANE LENNOX	(1) PROVIDE WITH 14" SUPPORT STAND. (2) PROVIDE WITH NEOPRENE PADS AT ALL MOUNTING CONNECTION POINTS. (3) PROVIDE REFRIGERANT PIPING SIZED AS PER MANUFACTURER'S RECOMMENDATIONS. "ACR" COPPER ONLY. (4) COORDINATE REFRIGERANT CHARGE AND PIPING SIZES WITH EQUIVALENT LINE LENGTH TO MINIMIZE PRESSURE DROP AND CAPACITY LOSS. (5) PROVIDE BOOT AT ANY CONDENSER LINE PENETRATIONS INTO BUILDING ENVELOPE. (6) PROVIDE CRANKCASE HEATER. (7) POWER CORRESPONDING IDU TO ODU.	PLUMB = DIVISION 22 MECH = DIVISION 23 ELEC = DIVISION 26 MNFR = MANUFACTURER

LABEL	SERVES	NOMINAL COOLING (BTUH)	EER	HEAT PUMP CAPACITY (BTUH)	COP	REFRIGERANT TYPE	MAX TOTAL REFRIGERANT PIPE LENGTH (FT)	ELECTRICAL					DISCONNECT PROVIDED BY (MECH/ ELEC)	SOUND RATING	WEIGHT (LBS)	MANUFACTURER	MODEL	REMARKS
								VOLTS	PHASE	Hz	MCA (EACH)	MOCP (EACH)						
ODU-1	IDU-1	8,800	12.5	9,400	3.56	R-410A	65	208	1	60	12	15	ELEC	36	66	DAIKIN	RXB09B	ALL

DUCTLESS SPLIT SYSTEM INDOOR UNIT

ACCEPTABLE MANUFACTURERS:	REMARKS:	SCHEDULE KEY:
TRANE/ MITSUBISHI LG FUJITSU DIAKIN	(1) RUN CONDENSATE DRAIN LINE TO NEAREST FLOOR DRAIN. (2) PROVIDE REFRIGERANT PIPING SIZED AS PER MANUFACTURER'S RECOMMENDATIONS. "ACR" COPPER ONLY. (3) COORDINATE REFRIGERANT CHARGE AND PIPING SIZES WITH EQUIVALENT LINE LENGTH TO MINIMIZE PRESSURE DROP AND CAPACITY LOSS. (4) PROVIDE FACTORY AUTHORIZED STARTUP OF EQUIPMENT INCLUDING STARTUP OF ANY FACTORY CONTROLS TO ENSURE PROPER SEQUENCING AND/OR COMMUNICATION TO BMS. (5) PROVIDE WITH 7-DAY PROGRAMMABLE THERMOSTAT. (6) POWER THRU CORRESPONDING ODU.	PLUMB = DIVISION 22 MECH = DIVISION 23 ELEC = DIVISION 26 MNFR = MANUFACTURER

LABEL	TYPE	AIRFLOW CFM	TOTAL COOLING CAPACITY (BTUH)	TOTAL HEATING CAPACITY (BTUH)	ELECTRICAL			DISCONNECT PROVIDED BY (MECH/ ELEC)	SOUND LEVEL	WEIGHT (LBS)	MANUFACTURER	MODEL	REMARKS
					VOLTS	PHASE	Hz						
IDU-1	WALL MOUNTED	300	8,800	9,400	208	1	60	ELEC	36	22	DAIKIN	FTXB09B	ALL

HEATER SCHEDULE (ELECTRIC)

ACCEPTABLE MANUFACTURERS:	REMARKS:	SCHEDULE KEY:
MODINE REZNOR QMARK MARLEY STERLING	(1) PROVIDE WITH FINGER PROOF FAN GUARD. (2) WALL MOUNTED. (3) PROVIDE WITH LOCKABLE/TAMPER RESISTANT THERMOSTAT. (4) PROVIDE SURFACE MOUNTED ACCESSORY. (5) MUST BE CORROSION RESISTANT. (6) CEILING MOUNTED. (7) PROVIDE TAMPER RESISTANT SCREWS FOR THE RECESSED UNIT IN THE CEILING. (8) MOUNT HEATERS TO THE TJIS FOLLOWING MANUFACTURERS RECOMMENDATOINS FOR MOUNTING AND CLEARANCES A.F.F.	PLUMB = DIVISION 22 MECH = DIVISION 23 ELEC = DIVISION 26 MNFR = MANUFACTURER

LABEL	TYPE	DIMENSIONS	MOUNTING HEIGHT	HEATING CAPACITY (kW)	STAGES	ELECTRICAL					DISCONNECT PROVIDED BY (MECH/ ELEC)	MANUFACTURER	MODEL	REMARKS
						VOLTS	PHASE	Hz	MCA	MOCP				
UH-1	ELECTRIC CEILING HEATER	16"x4"x18"	9' - 0"	1.5	1	208	1	60	12.5	20	ELEC	Marley Engineered Products	EFF1500	3,6,7
UH-3	ELECTRIC BASEBOARD HEATER	30"x7"x3"	1' - 8"	0.5	1	208	1	60	2	20	ELEC	Marley Engineered Products	QMKC2573W	1,2
UH-4	ELECTRIC WALL HEATER	15"x20"x5"	0' - 8"	0.75	1	208	1	60	3.6	20	ELEC	Marley Engineered Products	CWH1202DSAF	1,2,4
UH-5	ELECTRIC CEILING HEATER	15"x20"x5"	13' - 0"	4	1	208	1	60	19.2	25	ELEC	Marley Engineered Products	EFF4008	3,4,6
UH-6	ELECTRIC UNIT HEATER	13"x19.5"x18"	13' - 6"	5	1	480	3	60	6	20	ELEC	Marley Engineered Products	QWD05432	2,5

EXHAUST FAN SCHEDULE

ACCEPTABLE MANUFACTURERS:	CONTROLS:	REMARKS:	SCHEDULE KEY
PENN BARRY LOREN COOK TWIN CITY GREENHECK BROAN PANASONIC	(A) PROVIDE TIME CLOCK AND RUN CONTINUOUSLY DURING BUSINESS HOURS. (B) INTERLOCK WITH LIGHTS AND PROVIDE 10 MINUTE RUN DELAY. (C) RUN CONTINUOUSLY 24/7. PROVIDE WITH SWITCH FOR ON/OFF FOR ON/OFF SWITCH OPERATION.	(1) PROVIDE VARIABLE SPEED CONTROLLER FOR ALL DIRECT DRIVE FANS. TEST AND BALANCE CONTRACTOR SHALL MARK BALANCED POSITION ON CONTROLLER. (2) PROVIDE EC MOTOR VARIABLE SPEED FAN. (3) PROVIDE FACTORY AUTHORIZED STARTUP OF EQUIPMENT INCLUDING STARTUP OF ANY FACTORY CONTROLS TO ENSURE PROPER SEQUENCING AND/OR COMMUNICATION TO BMS. (4) MUST BE CHEMICALLY RESISTANT. (5) PROVIDE FILTER BOX W/ MERV 8 FILTERS AND MODULATING DUCT HEATER.	PLUMB = DIVISION 22 MECH = DIVISION 23 ELEC = DIVISION 26 MNFR = MANUFACTURER

LABEL	SERVES	CFM	ESP (IN-WC)	FAN RPM	ELECTRICAL				DISCONNECT PROVIDED BY (MECH/ ELEC)	CONTROL METHOD	SOUND RATING	WEIGHT (LBS)	MANUFACTURER	MODEL	REMARKS
					VOLTS	PHASE	Hz	HP							
EF-1	107,108	75	0.6	825	120	1	60	.2	ELEC	C	1.0	23	GREENHECK	CSP-A200	1,2,3,4
EF-2	106,111	70	0.25	900	120	1	60	.2	ELEC	B	1.0	14	GREENHECK	SP-A70	1,2,3
EF-3	103,112	200	0.25	1300	120	1	60	.25	ELEC	A	5.5	50	GREENHECK	SQ-80	1,2,3
SF-1	109	625	0.3	1550	120	1	60	.1	ELEC	C	7.9	54	GREENHECK	SQ-90-VG	1,2,3,4,5

DUCT HEATER SCHEDULE

ACCEPTABLE MANUFACTURERS:	REMARKS:
RENEWAIRE	(1) SEE ERV DUCT SIZE FOR HEATER DIMENSIONS. PROVIDE WITH AIRFLOW SENSOR AND HIGH LIMIT SHUTOFF. (2) PROVIDE CORROSION RESISTANT EQUIPMENT. (3) PROVIDE DUCT THERMOSTAT. (4) PROVIDE SCR MODULATION.

LABEL	TYPE	HEATING CAPACITY (kW)	STAGES	ELECTRICAL				DISCONNECT PROVIDED BY (MECH/ELEC)	MANUFACTURER	MODEL	REMARKS
				VOLTS	PHASE	MCA	MOCP				
DH-1	DUCT	12	1	208	3	35	45	ELEC	RENEWAIRE	IDHE	ALL

LOUVER SCHEDULE

ACCEPTABLE MANUFACTURERS:	REMARKS:
RUSKIN GREENHECK POTTORFF UNITED ENERTECH	(1) NC VALUES ARE BASED ON OCTAVE BAND SOUND POWER LEVELS MINUS A ROOM ABSORPTION OF 10 dB, RE 10(-12) WATTS. (2) COORDINATE EXACT COLOR SELECTION WITH OWNER AND ARCHITECT. (3) PROVIDE CORROSIVE RESISTIVE TAPE FOR DISSIMILAR METAL DOORS. (4) MUST BE CORROSION RESISTANT. (5) PROVIDE WITH BAROMETRIC RELIEF DAMPER GREENHECK HPR-120. (6) PROVIDE MOTORIZED LOUVER. INTERLOCK WITH NEARBY EF TO BE OPEN DURING BUSINESS HOURS AND CLOSED DURING OFF BUSINESS HOURS. (7) PROVIDE WITH INSECT SCREEN.

LABEL	TYPE	SERVES	AIRFLOW (CFM)	PD (IN-WC) (IN-WC)	NOMINAL SIZE (IN)	FREE AREA (SQ FT)	DESCRIPTION	MANUFACTURER	MODEL	REMARKS
DL-1	DOOR TRANSFER GRILLE	107,108	75	0.05	6" X 6"	0.25	EXTRUDED ALUMINUM DOOR GRILLE DOUBLE FLANGE	GREENHECK	XG-DGDF	1,2,3,4
L-1	WALL LOUVER	106,111	70	0.05	8" X 8"	0.44	EXTRUDED ALUMINUM DOOR GRILLE DOUBLE FLANGE	GREENHECK	EAC-401	1,2,6,7
L-2	WALL LOUVER	102,116	200	0.05	16" X 16"	1.77	EXTRUDED ALUMINUM DOOR GRILLE DOUBLE FLANGE	GREENHECK	EAC-401	1,2,6,7
L-3	WALL LOUVER	PUMP ROOM 109	625	0.30	32" X 24"	5.3	EXTRUDED ALUMINUM GRILLE W/ RELIEF DAMPER	GREENHECK	ESD-435	1,2,4,5,7
L-4	WALL LOUVER	103,112	50	0.05	8" X 8"	0.25	EXTRUDED ALUMINUM DOOR GRILLE DOUBLE FLANGE	GREENHECK	ESD-435	1,2

REGISTER - GRILLE- DIFFUSER SCHEDULE

ACCEPTABLE MANUFACTURERS:	REMARKS:
KRUEGER TUTTLE & BAILEY TITUS PRICE	(1) REGISTERS AND GRILLES SHALL BE TESTED IN ACCORDANCE WITH ANSI/ASHRAE STD 70. (2) NC VALUES ARE BASED ON OCTAVE BAND SOUND POWER LEVELS MINUS A ROOM ABSORPTION OF 10 dB, RE 10(-12) WATTS. (3) COORDINATE EXACT COLOR SELECTION WITH OWNER AND ARCHITECT. (4) MUST BE CORROSION RESISTANT.

LABEL	TYPE	AIRFLOW (CFM)	FACE SIZE	NECK SIZE	BLOW PATTERN	PD (IN-WC)	MAX NC	MANUFACTURER	MODEL	REMARKS
EG-1	EXHAUST GRILLE	50	12" X 12"	6" Ø	N/A	0.200	30	GREENHECK	XG-RH	1,2,3
EG-2	EXHAUST GRILLE	150	12" X 12"	8" Ø	N/A	0.300	30	GREENHECK	XG-RH	1,2,3
S-1	SQUARE CONE DIFFUSER	625	24" X 24"	12" Ø	4-WAY	0.142	30	PRICE INDUSTRIES	SCD	1,2,3,4

100 PERCENT SET

blu line designs
planning | landscape architecture | design
8719 S. Sandy Parkway
Sandy, UT 84070
p 801.679.3157

CLIENT

WPA Architecture
475 N FREEDOM BLVD
PROVO, UTAH 84601
801.374.0800
bfallon@wpa-architecture.com

SPECTRUM ENGINEERS
324 S. State St., Suite 400
Salt Lake City, UT 84111
800-679-7077
801-328-5151
fax: 801-328-5155
www.spectrum-engineers.com

IVY ACRES PARK

1397 WEST COOK LANE
FARMINGTON, UTAH

REVISIONS

NO.	APPROVAL	DESCRIPTION

Stamp



Designed By:	TMA
Drawn By:	TMA
Date:	2024.03.06
Checked By:	VJF
Project No:	22-246

Drawing Title

MECHANICAL SCHEDULES

Drawing number

M6.1



2 LEVEL 1 MECHANICAL PLAN - MAINTENANCE

SCALE: 1/4" = 1'-0"

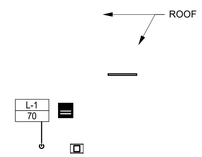

4 WALL MOUNTED LOUVER (E)

SCALE: 1/4" = 1'-0"

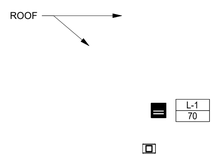

5 WALL MOUNTED LOUVER (W)

SCALE: 1/4" = 1'-0"



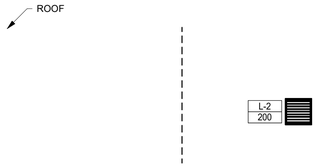

3 WALL MOUNTED LOUVER (N)

SCALE: 1/4" = 1'-0"

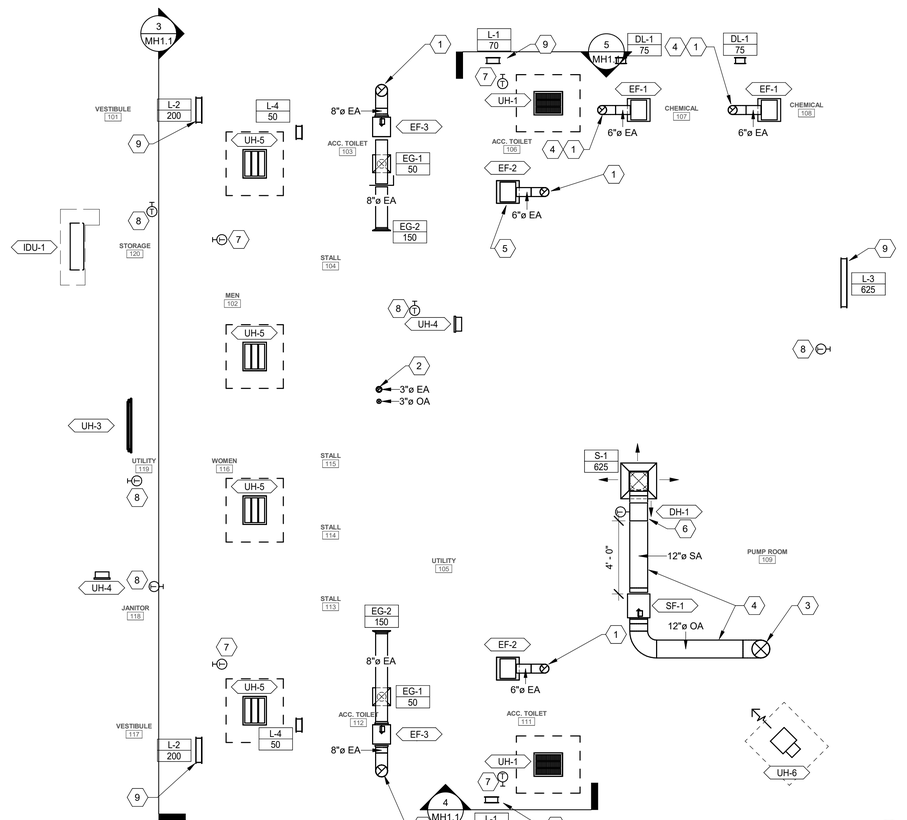

1 LEVEL 1 MECHANICAL PLAN - RESTROOM

SCALE: 1/4" = 1'-0"

MECHANICAL GENERAL NOTES

1. THE MECHANICAL DRAWINGS SHOW THE GENERAL DESIGN, ARRANGEMENT, & EXTENT OF THE MECHANICAL SYSTEM. BECAUSE OF THE SMALL SCALE OF THE DRAWINGS, THESE DRAWINGS DO NOT SHOW ALL OFFSETS, BENDS, OR ELBOWS NECESSARY FOR THE COMPLETE INSTALLATION IN THE SPACE PROVIDED. CONTRACTOR SHALL MAKE ALTERATIONS AS MAY BE NECESSARY TO MAKE THE SYSTEM COMPLETE & OPERATIONAL IN ACCORDANCE WITH THE DESIGN INTENT.
2. MAJOR DEVIATIONS SUCH AS CHANGES IN SIZES, WEIGHTS, QUANTITIES, OR MATERIAL REQUIRE PRIOR APPROVAL BY THE DESIGN ENGINEER.
3. THE DRAWINGS & SPECIFICATIONS HAVE BEEN PREPARED TO SUPPLEMENT EACH OTHER & SHALL BE INTERPRETED AS AN INTEGRAL UNIT WITH THE ITEMS SHOWN ON ONE & NOT THE OTHER BEING FURNISHED & INSTALLED AS THOUGH SHOWN AND CALLED OUT IN BOTH DOCUMENTS.
4. THE ENTIRE MECHANICAL INSTALLATION SHALL CONFORM TO THE REQUIREMENTS OF THE MOST RECENTLY ADOPTED BUILDING CODES, MECHANICAL CODE, PLUMBING CODE, ELECTRICAL CODE, & ALL OTHER APPLICABLE CITY, COUNTY, STATE, & FEDERAL CODES & REGULATIONS IN EFFECT.
5. THE ENTIRE MECHANICAL INSTALLATION SHALL CONFORM TO ALL CODES, RULES, REGULATIONS, & REQUIREMENTS OF THE BUILDING OWNER.
6. ALL MECHANICAL COMPONENTS AND EQUIPMENT SHALL BE INSTALLED TO CONFORM WITH ANY APPLICABLE LOCAL SEISMIC REQUIREMENTS.
7. PRIOR TO FABRICATION & INSTALLATION OF ANY MECHANICAL COMPONENT THE CONTRACTOR SHALL COORDINATE THE INSTALLATION OF ALL MECHANICAL WORK WITH ALL OTHER BUILDING TRADES, INCLUDING BUILDING TRADES HIRED DIRECTLY BY THE OWNER. WHERE CONFLICTS MAY OCCUR, THEY SHALL BE RESOLVED PRIOR TO INSTALLATION.
8. VERIFY ALL REQUIRED SERVICE CONNECTIONS, INCLUDING ELECTRICAL CHARACTERISTICS, FOR ALL EQUIPMENT PRIOR TO ORDERING OR FABRICATING MECHANICAL EQUIPMENT AND COMPONENTS.
9. THE SPACE ABOVE CEILINGS IS LIMITED. CAREFUL COORDINATION IS REQUIRED WITH ALL TRADES BEFORE ANY PIPE, DUCT, OR EQUIPMENT IS ORDERED &/OR INSTALLED. ANY CONFLICTS &/OR CHANGES FOUND DURING INSTALLATION THAT RESULTS FROM THE LACK OF COORDINATION BY THE CONTRACTORS DURING THE SHOP DRAWING PROCESS ARE THE RESPONSIBILITY OF THE CONTRACTOR.
10. ALL MECHANICAL INFORMATION IS NOT SHOWN ON THE MECHANICAL DRAWINGS. THE CONTRACTOR SHALL BE RESPONSIBLE FOR COORDINATION OF ALL INFORMATION ON ALL OTHER CONSTRUCTION DOCUMENTS.
11. THE CONTRACTOR SHALL BE RESPONSIBLE TO REVIEW & USE, WHERE APPROPRIATE, ALL THE MECHANICAL DETAILS SHOWN ON THE DRAWINGS. DETAILS MAY OR MAY NOT BE CALLED OUT ON THE DRAWINGS WITH SYMBOLS OR KEYED NOTES. ANY CHANGES RESULTING FROM FAILURE TO INSTALL THE MECHANICAL SYSTEM WITHOUT USING THE INCLUDED DETAILS SHALL BE THE RESPONSIBILITY OF THE CONTRACTOR.
12. ALL EQUIPMENT SHALL BE INDEPENDENTLY SUPPORTED FROM STRUCTURAL MEMBERS. STRUCTURAL ELEMENTS SHOWN IN DETAILS MAY OR MAY NOT PERTAIN TO ANY PORTION OF THE BUILDING. COORDINATE ALL MOUNTING REQUIREMENTS WITH ARCHITECTURAL & STRUCTURAL DRAWINGS AND SPECIFICATIONS.
13. ALL MECHANICAL COMPONENTS AND EQUIPMENT SHALL BE INSTALLED IN ACCORDANCE WITH ALL MANUFACTURER RECOMMENDATIONS.
14. ALL SIMILAR EQUIPMENT SHALL BE OF THE SAME MANUFACTURER. AIR INLETS & OUTLETS OF SIMILAR TYPES SHALL BE OF THE SAME MANUFACTURER.
15. ANY PART OF THE MECHANICAL INSTALLATION THAT FAILS, IS DEEMED UNFIT, OR BECOMES DAMAGED DURING CONSTRUCTION SHALL BE REPAIRED OR REPLACED BY THE CONTRACTOR AT NO ADDITIONAL COST TO THE OWNER. THE CONTRACTOR SHALL BE RESPONSIBLE FOR EQUIPMENT CHECK-IN, SAFEKEEPING, & DAMAGE.
16. COORDINATE WITH ARCHITECTURAL REFLECTED CEILING PLAN FOR EXACT LOCATION OF ALL CEILING DIFFUSERS & GRILLES.
17. CONTRACTOR SHALL OPERATE INSTALLED &/OR MODIFIED SYSTEMS & DEMONSTRATE ALL ASPECTS OF THE SYSTEM TO THE ENGINEER &/OR OWNER TO PROVE ALL ASSOCIATED SYSTEMS ARE OPERATIONAL.
18. DURING CONSTRUCTION THE CONTRACTOR SHALL MAINTAIN A SET OF AS-BUILT REDLINED RECORD DRAWINGS AT THE PROJECT SITE. ALL CHANGES OR DEVIATIONS IN LAYOUT, ROUTING, EQUIPMENT, COMPONENTS, & ACCESSORIES SHALL BE RECORDED. THESE REDLINED DRAWINGS SHALL BE GIVEN TO THE ARCHITECT / ENGINEER AFTER THE FINAL INSPECTION IN ACCORDANCE WITH PROJECT SPECIFICATIONS.
19. ALL DUCT ELBOWS SHALL BE LONG RADIUS, UNLESS NOTED OTHERWISE.
20. PROVIDE OPERATION AND MAINTENANCE MANUALS (O&M) WITHIN 30 DAYS OF CERTIFICATE OF OCCUPANCY FOR ALL EQUIPMENT IN DIGITAL FORMAT TO ENGINEER FOR REVIEW. O&M'S SHALL INCLUDE DOCUMENTATION OF ALL WARRANTIES, REPORTS AND TESTS, RECORD DRAWINGS, CONTROLS SEQUENCE OF OPERATIONS WITH DIAGRAMS, & EQUIPMENT INFORMATION. EQUIPMENT INFORMATION INCLUDES MAKE & MODEL, WIRING, PIPING, STARTUP, SHUTDOWN, TROUBLE SHOOTING SYSTEM BALANCING REPORT, FINAL COMMISSIONING REPORT AND MAINTENANCE PROCEDURES.

SHEET KEYNOTES

1 ROUTE EA UP THRU ROOF. PROVIDE VENT CAP AND BUG SCREEN.

2 ROUTE EA/OA UP THRU ROOF. PROVIDE VENT CAP AND BUG SCREEN.

3 ROUTE OA UP THRU ROOF.

4 EXPOSED DUCTWORK. PROVIDE ALUMINUM DUCTWORK IN PUMP ROOM AND CHEMICAL ROOMS. BRING TIGHT TO CEILING.

5 PROVIDE BACKDRAFT DAMPERS FOR ALL EXHAUST GRILLES/FANS.

6 INSTALL DUCT HEATER A MINIMUM OF 4' FROM EXHAUST FAN AS PER MANUFACTURER REQUIREMENTS.

7 CONFIRM THERMOSTAT LOCATION WITH OWNERS REP. PROVIDE LOCKABLE & TAMPER RESISTANT THERMOSTAT ENCLOSURE.

8 CONFIRM THERMOSTAT LOCATION WITH OWNERS REP.

9 WALL LOUVER. COORDINATE BLOCK OUT WITH STRUCTURAL. PROVIDE ACTUATOR AND INTERLOCK WITH NEARBY EXHAUST FAN.

10 WALL PENETRATION FOR OA DUCT. PROVIDE VENT CAP AND BUG SCREEN.

blu line designs
planning | landscape architecture | design
8719 S. Sandy Parkway
Sandy, UT 84070
p 801.679.3157

CLIENT

WPA Architecture
475 N FREEDOM BLVD
PROVO, UTAH 84601
801.374.0800
bfallon@wpa-architecture.com

SPECTRUM ENGINEERS
324 S. State St., Suite 400
Salt Lake City, UT 84111
800-678-7077
801-328-5151
fax: 801-328-5155
www.spectrum-engineers.com

IVY ACRES PARK

1397 WEST COOK LANE
FARMINGTON, UTAH

REVISIONS

NO.	APPROVED	DESCRIPTION

Stamp

REGISTERED PROFESSIONAL ENGINEER
No. 13438797
TYLER M. ANDERSON
03.06.2024
STATE OF UTAH

Designed By:	TMA
Drawn By:	TMA
Date:	2024.03.06
Checked By:	VJF
Project No:	22-246

Drawing Title

LEVEL 1 MECHANICAL PLAN

Drawing number

MH1.1

100 PERCENT SET

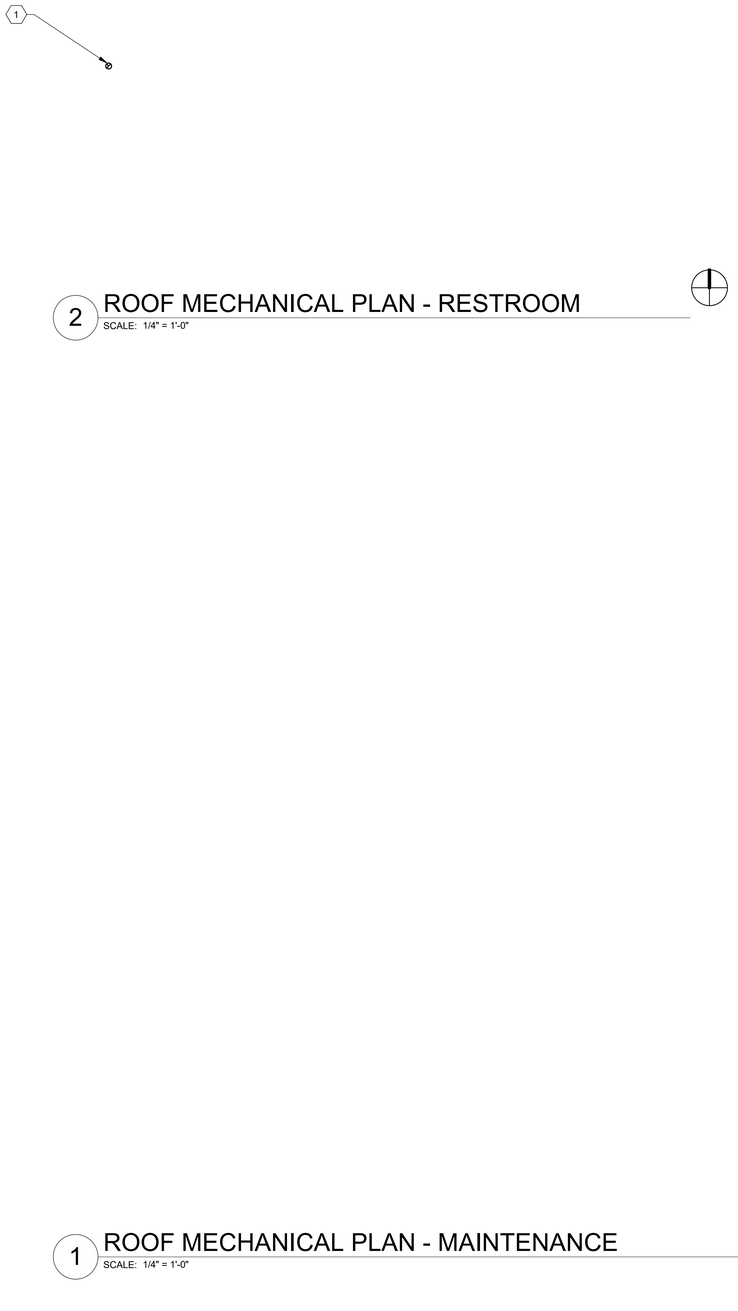

2 ROOF MECHANICAL PLAN - RESTROOM

SCALE: 1/4" = 1'-0"

1 ROOF MECHANICAL PLAN - MAINTENANCE

SCALE: 1/4" = 1'-0"

MECHANICAL GENERAL NOTES

1. THE MECHANICAL DRAWINGS SHOW THE GENERAL DESIGN, ARRANGEMENT, & EXTENT OF THE MECHANICAL SYSTEM. BECAUSE OF THE SMALL SCALE OF THE DRAWINGS, THESE DRAWINGS DO NOT SHOW ALL OFFSETS, BENDS, OR ELBOWS NECESSARY FOR THE COMPLETE INSTALLATION IN THE SPACE PROVIDED. CONTRACTOR SHALL MAKE ALTERATIONS AS MAY BE NECESSARY TO MAKE THE SYSTEM COMPLETE & OPERATIONAL IN ACCORDANCE WITH THE DESIGN INTENT.
2. MAJOR DEVIATIONS SUCH AS CHANGES IN SIZES, WEIGHTS, QUANTITIES, OR MATERIAL REQUIRE PRIOR APPROVAL BY THE DESIGN ENGINEER.
3. THE DRAWINGS & SPECIFICATIONS HAVE BEEN PREPARED TO SUPPLEMENT EACH OTHER & SHALL BE INTERPRETED AS AN INTEGRAL UNIT WITH THE ITEMS SHOWN ON ONE & NOT THE OTHER BEING FURNISHED & INSTALLED AS THOUGH SHOWN AND CALLED OUT IN BOTH DOCUMENTS.
4. THE ENTIRE MECHANICAL INSTALLATION SHALL CONFORM TO THE REQUIREMENTS OF THE MOST RECENTLY ADOPTED BUILDING CODES, MECHANICAL CODE, PLUMBING CODE, ELECTRICAL CODE, & ALL OTHER APPLICABLE CITY, COUNTY, STATE, & FEDERAL CODES & REGULATIONS IN EFFECT.
5. THE ENTIRE MECHANICAL INSTALLATION SHALL CONFORM TO ALL CODES, RULES, REGULATIONS, & REQUIREMENTS OF THE BUILDING OWNER.
6. ALL MECHANICAL COMPONENTS AND EQUIPMENT SHALL BE INSTALLED TO CONFORM WITH ANY APPLICABLE LOCAL SEISMIC REQUIREMENTS.
7. PRIOR TO FABRICATION & INSTALLATION OF ANY MECHANICAL COMPONENT THE CONTRACTOR SHALL COORDINATE THE INSTALLATION OF ALL MECHANICAL WORK WITH ALL OTHER BUILDING TRADES, INCLUDING BUILDING TRADES HIRED DIRECTLY BY THE OWNER. WHERE CONFLICTS MAY OCCUR, THEY SHALL BE RESOLVED PRIOR TO INSTALLATION.
8. VERIFY ALL REQUIRED SERVICE CONNECTIONS, INCLUDING ELECTRICAL CHARACTERISTICS, FOR ALL EQUIPMENT PRIOR TO ORDERING OR FABRICATING MECHANICAL EQUIPMENT AND COMPONENTS.
9. THE SPACE ABOVE CEILINGS IS LIMITED. CAREFUL COORDINATION IS REQUIRED WITH ALL TRADES BEFORE ANY PIPE, DUCT, OR EQUIPMENT IS ORDERED &/OR INSTALLED. ANY CONFLICTS &/OR CHANGES FOUND DURING INSTALLATION THAT RESULTS FROM THE LACK OF COORDINATION BY THE CONTRACTORS DURING THE SHOP DRAWING PROCESS ARE THE RESPONSIBILITY OF THE CONTRACTOR.
10. ALL MECHANICAL INFORMATION IS NOT SHOWN ON THE MECHANICAL DRAWINGS. THE CONTRACTOR SHALL BE RESPONSIBLE FOR COORDINATION OF ALL INFORMATION ON ALL OTHER CONSTRUCTION DOCUMENTS.
11. THE CONTRACTOR SHALL BE RESPONSIBLE TO REVIEW & USE, WHERE APPROPRIATE, ALL THE MECHANICAL DETAILS SHOWN ON THE DRAWINGS. DETAILS MAY OR MAY NOT BE CALLED OUT ON THE DRAWINGS WITH SYMBOLS OR KEYED NOTES. ANY CHANGES RESULTING FROM FAILURE TO INSTALL THE MECHANICAL SYSTEM WITHOUT USING THE INCLUDED DETAILS SHALL BE THE RESPONSIBILITY OF THE CONTRACTOR.
12. ALL EQUIPMENT SHALL BE INDEPENDENTLY SUPPORTED FROM STRUCTURAL MEMBERS. STRUCTURAL ELEMENTS SHOWN IN DETAILS MAY OR MAY NOT PERTAIN TO ANY PORTION OF THE BUILDING. COORDINATE ALL MOUNTING REQUIREMENTS WITH ARCHITECTURAL & STRUCTURAL DRAWINGS AND SPECIFICATIONS.
13. ALL MECHANICAL COMPONENTS AND EQUIPMENT SHALL BE INSTALLED IN ACCORDANCE WITH ALL MANUFACTURER RECOMMENDATIONS.
14. ALL SIMILAR EQUIPMENT SHALL BE OF THE SAME MANUFACTURER. AIR INLETS & OUTLETS OF SIMILAR TYPES SHALL BE OF THE SAME MANUFACTURER.
15. ANY PART OF THE MECHANICAL INSTALLATION THAT FAILS, IS DEEMED UNFIT, OR BECOMES DAMAGED DURING CONSTRUCTION SHALL BE REPAIRED OR REPLACED BY THE CONTRACTOR AT NO ADDITIONAL COST TO THE OWNER. THE CONTRACTOR SHALL BE RESPONSIBLE FOR EQUIPMENT CHECK-IN, SAFEKEEPING, & DAMAGE.
16. COORDINATE WITH ARCHITECTURAL REFLECTED CEILING PLAN FOR EXACT LOCATION OF ALL CEILING DIFUSERS & GRILLES.
17. CONTRACTOR SHALL OPERATE INSTALLED &/OR MODIFIED SYSTEMS & DEMONSTRATE ALL ASPECTS OF THE SYSTEM TO THE ENGINEER &/OR OWNER TO PROVE ALL ASSOCIATED SYSTEMS ARE OPERATIONAL.
18. DURING CONSTRUCTION THE CONTRACTOR SHALL MAINTAIN A SET OF AS-BUILT REDLINED RECORD DRAWINGS AT THE PROJECT SITE. ALL CHANGES OR DEVIATIONS IN LAYOUT, ROUTING, EQUIPMENT, COMPONENTS, & ACCESSORIES SHALL BE RECORDED. THESE REDLINED DRAWINGS SHALL BE GIVEN TO THE ARCHITECT / ENGINEER AFTER THE FINAL INSPECTION IN ACCORDANCE WITH PROJECT SPECIFICATIONS.
19. ALL DUCT ELBOWS SHALL BE LONG RADIUS, UNLESS NOTED OTHERWISE.
20. PROVIDE OPERATION AND MAINTENANCE MANUALS (O&M) WITHIN 30 DAYS OF CERTIFICATE OF OCCUPANCY FOR ALL EQUIPMENT IN DIGITAL FORMAT TO ENGINEER FOR REVIEW. O&M'S SHALL INCLUDE DOCUMENTATION OF ALL WARRANTIES, REPORTS AND TESTS, RECORD DRAWINGS, CONTROLS SEQUENCE OF OPERATIONS WITH DIAGRAMS, & EQUIPMENT INFORMATION. EQUIPMENT INFORMATION INCLUDES MAKE & MODEL, WIRING, PIPING, STARTUP, SHUTDOWN, TROUBLE SHOOTING SYSTEM BALANCING REPORT, FINAL COMMISSIONING REPORT AND MAINTENANCE PROCEDURES.

SHEET KEYNOTES

1 ROUTE EA UP THRU ROOF. PROVIDE VENT CAP AND BUG SCREEN.

2 ROUTE EA 3' ABOVE OA. PROVIDE VENT CAP AND BUG SCREEN.

3 INSTALL 10' FROM BUILDING EDGE.

4 PROVIDE GREENHECK AIR INTAKE ROOF CAP MODEL # GRSI. SEE DETAIL 10 ON ME501. INSTALL 10' FROM ANY NEARBY AIR EXHAUST. PROVIDE INSECT & BIRD SCREEN. SEE DUCT DIMENSIONS FOR ATTACHMENT.

blu line designs
planning | landscape architecture | design
8719 S. Sandy Parkway
Sandy, UT 84070
p 801.679.3157

CLIENT

WPA Architecture
475 N FREEDOM BLVD
PROVO, UTAH 84601
801.374.0800
bfallon@wpa-architecture.com

SPECTRUM ENGINEERS
324 S. State St., Suite 400
Salt Lake City, UT 84111
800-678-7077
801-328-5151
fax: 801-328-5155
www.spectrum-engineers.com

IVY ACRES PARK

1397 WEST COOK LANE
FARMINGTON, UTAH

REVISIONS

NO.	APPROVED	DESCRIPTION

Stamp

REGISTERED PROFESSIONAL ENGINEER
No. 13436797
TYLER M. ANDERSON
03.06.2024
STATE OF UTAH

Designed By:	TMA
Drawn By:	TMA
Date:	2024.03.06
Checked By:	VJF
Project No:	22-246

Drawing Title

ROOF MECHANICAL PLAN

Drawing number

MH1.2

100 PERCENT SET

SYMBOL LEGEND - MISC

REFERENCE LINES AND SYMBOLS

SYMBOL	DESCRIPTION
- ---	VIEW OR DETAIL INDICATOR: # INDICATES DETAIL NUMBER, SHEET INDICATES DRAWING SHEET WHERE VIEW OR DETAIL IS SHOWN.
- ---	ELEVATION OR SECTION INDICATOR: # INDICATES VIEW NUMBER, SHEET INDICATES DRAWING SHEET WHERE VIEW IS SHOWN.
NAME ####	ROOM / SPACE INDICATOR
#	KEYNOTE INDICATOR
A	REVISION INDICATOR
XX-##	PLUMBING FIXTURE INDICATOR
XX-##	EQUIPMENT INDICATOR
TAG CFM	REGISTER, GRILLE, OR DIFFUSER INDICATOR
OR	BREAKLINE
MATCH LINE SEE XX/XXX	MATCHLINE INDICATOR
	CONTRACT LIMIT LINE: DASHDOT, WIDE LINE
	NEW CONNECTION TO EXISTING
	POINT OF DEMOLITION

SYMBOL LEGEND - PIPING

NOTE: ALL ABBREVIATIONS MAY NOT BE USED.

SYMBOL	DESCRIPTION
	HOSE BIBB / WALL HYDRANT
	CLEANOUT TO GRADE
	FLOOR CLEANOUT
	WALL CLEANOUT
	FLOOR DRAIN
	FLOOR SINK

DEFINITIONS

NOTE: ALL DEFINITIONS MAY NOT BE USED.

INDICATED: THE TERM "INDICATED" REFERS TO GRAPHIC REPRESENTATIONS, NOTES, OR SCHEDULES ON THE DRAWINGS, OTHER PARAGRAPHS OR SCHEDULES IN THE SPECIFICATIONS, AND SIMILAR REQUIREMENTS IN THE CONTRACT DOCUMENTS. WHERE TERMS SUCH AS "SHOWN", "NOTED", "SCHEDULED", AND "SPECIFIED" ARE USED, IT IS TO HELP THE READER LOCATE THE REFERENCE, NO LIMITATION ON LOCATION IS INTENDED.

DIRECTED: TERMS SUCH AS "DIRECTED", "REQUESTED", AUTHORIZED", "SELECTED", "APPROVED", "REQUIRED", AND "PERMITTED" MEAN "DIRECTED BY THE ENGINEER", "REQUESTED BY THE ENGINEER", AND SIMILAR PHRASES.

APPROVED: THE TERM "APPROVED", WHERE USED IN CONJUNCTION WITH THE ENGINEER'S ACTION ON THE CONTRACTOR'S SUBMITTALS, APPLICATIONS, AND REQUESTS, IS LIMITED TO THE ENGINEER'S DUTIES AND RESPONSIBILITIES AS STATED IN GENERAL AND SUPPLEMENTARY CONDITIONS.

FURNISH: THE TERM "FURNISH" IS USED TO MEAN "SUPPLY AND DELIVER TO THE PROJECT SITE, READY FOR UNLOADING, UNPACKING, ASSEMBLY, INSTALLATION, AND SIMILAR OPERATIONS."

INSTALL: THE TERM "INSTALL" IS USED TO DESCRIBE OPERATIONS AT PROJECT SITE INCLUDING THE ACTUAL "UNLOADING, UNPACKING, ASSEMBLY, ERECTION, PLACING, ANCHORING, APPLYING, WORKING TO DIMENSION, FINISHING, CURING, PROTECTING, CLEANING, AND SIMILAR OPERATIONS."

PROVIDE: THE TERM "PROVIDE" MEANS "TO FURNISH AND INSTALL, COMPLETE AND READY FOR THE INTENDED USE."

INSTALLER: AN "INSTALLER" IS THE CONTRACTOR OR AN ENTITY ENGAGED BY THE CONTRACTOR, EITHER AS AN EMPLOYEE, SUBCONTRACTOR, OR SUB-SUBCONTRACTOR, FOR PERFORMANCE OF A PARTICULAR CONSTRUCTION ACTIVITY, INCLUDING INSTALLATION, ERECTION, APPLICATION, AND SIMILAR OPERATIONS. INSTALLERS ARE REQUIRED TO BE EXPERIENCED IN THE OPERATIONS THEY ARE ENGAGED TO PERFORM.

PIPING LEGEND

NOTE: ALL ABBREVIATIONS MAY NOT BE USED.

ABBREVIATION	DESCRIPTION
160	160°F HOT WATER
160R	160°F HOT WATER RETURN / CIRCULATION
180	180°F HOT WATER
180R	180°F HOT WATER RETURN / CIRCULATION
AW	ACID WASTE
AV	ACID VENT
C02	CARBON DIOXIDE
CWV	COMBINATION WASTE AND VENT
CA	COMPRESSED AIR
CD	CONDENSATE DRAIN
DCW	DOMESTIC COLD WATER
DHW	DOMESTIC HOT WATER
DHWR	DOMESTIC HOT WATER RECIRCULATION
DI	DEIONIZED WATER
DSW	DOMESTIC SOFT WATER
	DEMOLISHED PIPING
FP	FIRE PROTECTION
FOR	FUEL OIL RETURN
FOS	FUEL OIL SUPPLY
FOV	FUEL OIL VENT
GW	GREASE WASTE
HPC	HIGH PRESSURE CONDENSATE
MPC	MEDIUM PRESSURE CONDENSATE
LPC	LOW PRESSURE CONDENSATE
ICW	INDUSTRIAL COLD WATER
IHW	INDUSTRIAL HOT WATER
IW	IRRIGATION WATER
LPG	LIQUID PROPANE GAS
MA	MEDICAL AIR
NG	NATURAL GAS
NO	NITROUS OXIDE
O	OXYGEN
PC	PUMPED CONDENSATE
RW	RAINWATER / STORM DRAIN
SRW	SECONDARY RAINWATER / STORM DRAIN
SS	SANITARY SEWER
VAC	VACUUM
V	VENT

SYMBOL LEGEND - PIPING

NOTE: ALL ABBREVIATIONS MAY NOT BE USED.

SYMBOL	DESCRIPTION
	SHUT OFF VALVE
	GATE VALVE
	CHECK VALVE
	AUTOMATIC 2-WAY VALVE
	AUTOMATIC 3-WAY VALVE
	GLOBE VALVE
	BALL VALVE
	RELIEF VALVE
	PRESSURE REDUCING VALVE
	BUTTERFLY VALVE
	SOLENOID VALVE
	ANGLE VALVE
	VENTURI VALVE
	BALANCING OR PLUG COCK
	FLOW SETTER
	EXPANSION VALVE
	GAS COCK
MAV	MANUAL AIR VENT
	STRAINER
	GAUGE COCK
	FLEXIBLE CONNECTION
	PRESSURE GAUGE
	THERMOMETER
	PIPE REDUCER
	REFRIGERANT SITE GLASS
	REFRIGERANT STRAINER
	REFRIGERANT FILTER DRIER
	90 DEGREE ELBOW UP
	90 DEGREE ELBOW DOWN
	90 DEGREE TEE UP
	90 DEGREE TEE DOWN
	PIPE UNION
	PIPE CAP
	PIPE ANCHOR
	FLOAT AND THERMOSTATIC TRAP

ABBREVIATIONS

NOTE: ALL ABBREVIATIONS MAY NOT BE USED.

(E)	EXISTING
(F)	FUTURE
AC	AIR CONDITION(-ING,-ED)
APD	AIR PRESSURE DROP
BD	BALANCING DAMPER
BHP	BRAKE HORSE POWER
BTU	BRITISH THERMAL UNIT
BTUH	BTU/HOUR
CFH	CUBIC FEET PER HOUR
CFM	CUBIC FEET PER MINUTE
CV	CONTROL VALVE
DB	DRY BULB TEMPERATURE
DCW	DOMESTIC COLD WATER
DHW	DOMESTIC HOT WATER
DHWR	DOMESTIC HOT WATER RECIRC
DP	DEPTH, DEEP, OR DROP IN PRESSURE
EA	EXHAUST AIR
EER	ENERGY EFFICIENCY RATIO
EFF	EFFICIENCY
ELEC	ELECTRIC
ELEV	ELEVATION
ENT	ENTERING
EVAP	EVAPORAT(-E, -ING, -ED, -OR)
EWT	ENTERING WATER TEMPERATURE
EXT	EXTERNAL
FD	FIRE DAMPER
FLA	FULL LOAD AMPS
FPI	FINS PER INCH
FPM	FEET PER MINUTE
FPS	FEET PER SECOND
FSD	FIRE SMOKE DAMPER
GE	GREASE EXHAUST
GPH	GALLONS PER HOUR
GPM	GALLONS PER MINUTE
HD	HEAD
HG	MERCURY
HP	HORSEPOWER
HR	HOUR
HTG	HEATING
HZ	HERTZ (FREQUENCY)
IN	INCH
KW	KILOWATT
LAT	LEAVING AIR TEMPERATURE
LBS	POUNDS
LH	LATENT HEAT
LRA	LOCKED ROTOR AMPS
LVG	LEAVING
LWT	LEAVING WATER TEMPERATURE
MBH	THOUSAND BTU PER HOUR
MCA	MINIMUM CIRCUIT AMPS
MFR	MANUFACTUR(-ER, -ED)
NC	NORMALLY CLOSED OR NOISE CRITERIA
NIC	NOT IN CONTRACT
NO	NORMALLY OPEN
NPSH	NET POSITIVE SUCTION HEAD
NTS	NOT TO SCALE
OA	OUTSIDE AIR
OD	OUTSIDE DIAMETER
OZ	OUNCE
PD	PRESSURE DROP OR DIFFERENCE
PG	PROPOLENE GLYCOL
PH	PHASE
PPM	PARTS PER MILLION
PSF	POUNDS PER SQUARE FOOT
PSI	POUNDS PER SQUARE INCH
PSIA	PSI ABSOLUTE
PSIG	PSI GAUGE
RA	RETURN AIR
RECIRC	RECIRCULATE (-ER, -ED, -ING)
REFR	REFRIGERATION
REQD	REQUIRED
RLA	RATED LOAD AMPS
RPM	REVOLUTIONS PER MINUTE
SA	SUPPLY AIR
SCFM	STANDARD CUBIC FEET PER MINUTE
SCW	SOFT COLD WATER
SH	SENSIBLE HEAT
SP	STATIC PRESSURE
SPEC(S)	SPECIFICATION(S)
SQ	SQUARE
STD	STANDARD
SW	SOIL, WASTE
TA(R)	TRANSFER AIR (RETURN)
TA(S)	TRANSFER AIR (SUPPLY)
TD	TEMP. DROP OR DIFF.
TEMP	TEMPERATURE
TOT	TOTAL
TSTAT	THERMOSTAT
V	VOLT, VOLTAGE OR VENT
VAC	VACUUM
VAV	VARIABLE AIR VOLUME
VEL	VELOCITY
VENT	VENT, VENTILATION
VERT	VERTICAL
VFD	VARIABLE FREQUENCY DRIVE
VOL	VOLUME
VTR	VENT THROUGH ROOF
WB	WET BULB TEMP
WC	WATER COLUMN
WG	WATER GAUGE
WPD	WATER PRESSURE DROP
WTR	WATER

PLUMBING GENERAL NOTES

1. THE PLUMBING DRAWINGS SHOW THE GENERAL DESIGN, ARRANGEMENT AND EXTENT OF THE PLUMBING SYSTEM. BECAUSE OF THE SMALL SCALE OF THE DRAWINGS, THESE DRAWINGS DO NOT SHOW ALL OFFSETS, BENDS OR ELBOWS NECESSARY FOR THE COMPLETE INSTALLATION IN THE SPACE PROVIDED. CONTRACTOR SHALL MAKE SUCH SLIGHT ALTERATIONS AS MAY BE NECESSARY TO MAKE THE SYSTEM COMPLETE AND OPERATIONAL IN ACCORDANCE WITH THE DESIGN INTENT. MAJOR DEVIATIONS SUCH AS CHANGES IN COMPONENT SIZES, WEIGHTS, QUANTITIES OR MATERIAL REQUIRE PRIOR APPROVAL BY THE DESIGN ENGINEER.
2. THE DRAWINGS AND SPECIFICATIONS HAVE BEEN PREPARED TO SUPPLEMENT EACH OTHER AND SHALL BE INTERPRETED AS AN INTEGRAL UNIT WITH THE ITEMS SHOWN ON ONE AND NOT THE OTHER BEING FURNISHED AND INSTALLED AS THOUGH SHOWN AND CALLED OUT IN BOTH.
3. THE ENTIRE PLUMBING INSTALLATION SHALL CONFORM TO THE REQUIREMENTS OF THE MOST RECENTLY ADOPTED BUILDING CODES, MECHANICAL CODE, PLUMBING CODE, ELECTRICAL CODE, AND ALL OTHER APPLICABLE CITY, COUNTY, STATE, AND FEDERAL CODES AND REGULATIONS IN EFFECT.
4. THE ENTIRE PLUMBING INSTALLATION SHALL CONFORM TO ANY CODES, RULES, REGULATIONS AND REQUIREMENTS OF THE BUILDING OWNER.
5. PRIOR TO FABRICATION AND INSTALLATION OF ANY PLUMBING COMPONENT THE CONTRACTOR SHALL COORDINATE THE INSTALLATION OF ALL PLUMBING WORK WITH ALL OTHER BUILDING TRADES, INCLUDING BUILDING TRADES HIRED DIRECTLY BY THE OWNER. WHERE CONFLICTS MAY OCCUR, THEY SHALL BE RESOLVED PRIOR TO INSTALLATION.
6. ALL PLUMBING INFORMATION IS NOT SHOWN ON THE PLUMBING DRAWINGS. THE CONTRACTOR SHALL BE RESPONSIBLE FOR COORDINATING ALL INFORMATION ON ALL OTHER CONSTRUCTION DOCUMENTS.
7. THE CONTRACTOR SHALL BE RESPONSIBLE TO REVIEW AND USE, WHERE APPROPRIATE, ALL THE PLUMBING DETAILS SHOWN ON THE DRAWINGS. DETAILS MAY OR MAY NOT BE CALLED OUT ON THE DRAWINGS WITH SYMBOLS OR KEYED NOTES. ANY CHANGES RESULTING FROM FAILURE TO INSTALL THE PLUMBING SYSTEM WITHOUT USING THE INCLUDED DETAILS SHALL BE THE RESPONSIBILITY OF THE CONTRACTOR.
8. ANY PART OF THE PLUMBING INSTALLATION THAT FAILS, IS UNFIT, OR BECOMES DAMAGED DURING CONSTRUCTION SHALL BE REPAIRED OR REPLACED BY THE CONTRACTOR AT NO ADDITIONAL COST TO THE OWNER.
9. PROVIDE PROPER PROVISIONS FOR EXPANSION, CONTRACTION, OR MOVEMENT OF ALL PIPING.
10. PROVIDE LARGE ENOUGH PIPE SLEEVES THROUGH WALL OR FLOOR TO ALLOW FOR ANTICIPATED DIFFERENTIAL MOVEMENT.
11. ALL PIPING SHALL BE SUPPORT WITH CLEVIS HANGERS (MSS TYPE 1). PERFORATED METAL STRAPS OR PLASTIC STRAPPING (PLUMBER TAPE) SHALL NOT BE USED TO SUPPORT OR BRACE ANY PIPE.
12. PROVIDE PIPE HANGERS WITHIN 18-INCHES OF ALL CHANGES OF DIRECTION.
13. PROVIDE SWAY BRACING FOR ALL PIPING 4" AND LARGER AT ALL CHANGES IN DIRECTION GREATER THAN 45-DEGREES.
14. ALL STEEL CLEVIS HANGERS USED TO SUPPORT COPPER PIPING SHALL BE COPPER OR PLASTIC COATED.
15. COPPER PIPING SHALL NOT COME IN CONTACT WITH FIRE TREATED LUMBER. PROVIDE ½" THICK SLIP-ON CLOSED CELL INSULATION WHERE COPPER PIPING IS ADJACENT TO FIRE TREATED LUMBER. CLOSED CELL INSULATION SHALL EXTEND A MINIMUM OF 1-1/2" PAST LUMBER.
16. ALL EXPOSED PIPING SHALL BE INSTALLED IN A NEATLY ARRANGED MANNER PARALLEL TO THE BUILDING STRUCTURE.
17. ALL EXPOSED DOMESTIC WATER PIPE IN OCCUPIED SPACES SHALL BE POLISHED CHROME PLATED.
18. ALL EXPOSED DRAINAGE PIPING IN OCCUPIED SPACES INCLUDING TRAPS UNDER SINKS SHALL BE POLISHED CHROME PLATED.
19. DRAWINGS SHOW GENERAL ARRANGEMENT OF THE DRAIN WASTE AND VENT SYSTEM WITH THE REQUIRED CLEANOUTS. CONTRACTOR SHALL PROVIDE ALL ADDITIONAL CLEANOUTS AS REQUIRED BY THE PLUMBING CODE.
20. ALL SANITARY DRAINAGE SYSTEM PIPING 3" AND LARGER SHALL BE SLOPED IN DIRECTION OF FLOW AT A MINIMUM OF 1/8" PER FOOT.
21. ALL SANITARY DRAINAGE SYSTEM PIPING SMALLER THAN 3" SHALL BE SLOPED IN DIRECTION OF FLOW AT A MINIMUM OF 1/4" PER FOOT.
22. SLOPE VENT SYSTEM TOWARDS DRAINAGE SYSTEM.
23. SIMILAR EQUIPMENT SHALL BE OF THE SAME MANUFACTURER.
24. ALL EQUIPMENT SHALL PROVIDE THE SCHEDULED PERFORMANCE AT THE JOB SITE ELEVATION.
25. FIXTURE AND EQUIPMENT MODEL NUMBERS SHOWN IN PLUMBING FIXTURE SCHEDULE AND PLUMBING EQUIPMENT SCHEDULE ARE SHOWN TO ESTABLISH THE TYPE OF PRODUCT THAT SHALL BE USED. THE SELECTED PRODUCT SHALL MEET THE SCHEDULED PERFORMANCE DATA SHOWN ON THE SCHEDULE EVEN IF A DIFFERENT MODEL IS SUPPLIED THAT IS DIFFERENT THAN THAT SCHEDULED.
26. ALL EQUIPMENT SHALL BE INSTALLED IN STRICT ACCORDANCE WITH THE EQUIPMENT MANUFACTURER'S INSTALLATION INSTRUCTIONS. PROVIDE ALL NECESSARY FITTINGS, TRANSITIONS, VALVES AND OTHER DEVICES AND ACCESSORIES REQUIRED FOR A COMPLETE, WORKABLE INSTALLATION.
27. SEE "PLUMBING FIXTURE SCHEDULE" FOR INDIVIDUAL TRAPS, WASTE, VENT, AND DOMESTIC WATER PIPING FOR INDIVIDUAL FIXTURES.
28. ALL PLUMBING EQUIPMENT SHALL BE LISTED AND LABELED BY AN APPROVED TESTING AGENCY.
29. FIXTURES, EQUIPMENT AND PIPING INSTALLATION SHALL MEET NSF STANDARDS.
30. PLUMBING PIPING SCHEDULE:
    A. DOMESTIC WATER ABOVE GRADE= TYPE L COPPER - SOLDERED
    B. DOMESTIC WATER BELOW GRADE= TYPE K COPPER - SOLDERED
    C. ROOF DRAIN, WASTE & VENT ABOVE GRADE = CAST IRON - HUBLESS COUPLINGS WITH HEAVY DUTY COUPLINGS
    D. ROOF DRAIN, WASTE & VENT BELOW GRADE = DWV SOLID CORE PVC -SOLVENT CEMENT
31. ALL DOMESTIC WATER PIPING TO BE COPPER. ALL HOT WATER AND HOT WATER RECIRCULATING PIPING TO BE INSULATED WITH 1" UP TO 1-1/4" PIPE AND 1-1/2" INSULATION FOR PIPING 1-1/2" AND LARGER. DOMESTIC COLD WATER PIPING TO BE INSULATED WITH 1/2" UP TO 1-1/4" PIPING AND 1" INSULATION FOR PIPING 1-1/2" OR LARGER.
32. THE CONTRACTOR SHALL CLOSELY COORDINATE MECHANICAL AND PLUMBING WITH ELECTRICAL, ARCHITECTURAL, AND BUILDING STRUCTURE.
33. HEAT TRACE ALL PIPING EXTERIOR TO BUILDING ENVELOPE OR IN FREEZING CONDITIONS. HEAT TRACE SHALL BE SELF-REGULATING AND A MINIMUM OF 8 W/FT. WRAP HEAT TRACE AROUND PIPING PER MANUFACTURER'S WRITTEN INSTRUCTIONS. PROVIDE POWER CONNECTION TO ELECTRIC HEAT TRACE. CIRCUIT THROUGH THERMOSTAT CONTROL AND CONNECT TO GFCI CIRCUIT BREAKER IN PANELBOARD WITH 30 MILLI-AMP GFI TRIP. HEAT TRACE IS ASSUMED TO BE 120V 20 AMPS, VERIFY VOLTAGE PRIOR TO INSTALLATION. IT IS ALSO ACCEPTABLE TO PROVIDE LONGER RUNS OF HEAT TRACE BY USING 120V 30 AMP CIRCUITS, 208V 20 AMP CIRCUITS, OR 208V 30 AMP CIRCUITS TO HELP WITH EFFICIENCY.

PLUMBING SHEET INDEX

P0.1	**PLUMBING COVER SHEET**
P5.1	**PLUMBING DETAILS**
P5.2	**PLUMBING DETAILS**
P6.1	**PLUMBING SCHEDULES**
PL1.1	**LEVEL 1 PLUMBING PLAN - DWV**
PL1.2	**ROOF PLUMBING PLAN - DWV**
PL1.3	**LEVEL 1 PLUMBING PLAN - WATER**

blu line designs
planning | landscape architecture | design
8719 S. Sandy Parkway
Sandy, UT 84070
p 801.679.3157

CLIENT

WPA Architecture
475 N FREEDOM BLVD
PROVO, UTAH 84601
801.374.0800
bfallon@wpa-architecture.com

SPECTRUM ENGINEERS
324 S. State St., Suite 400
Salt Lake City, UT 84111
800-678-7077
801-328-5151
fax: 801-328-5155
www.spectrum-engineers.com

IVY ACRES PARK

1397 WEST COOK LANE
FARMINGTON, UTAH

REVISIONS

NO.	APPROVAL	DESCRIPTION

Stamp

REGISTERED PROFESSIONAL ENGINEER
No. 13435797
TYLER M. ANDERSON
03.06.2024
STATE OF UTAH

Designed By:	TMA
Drawn By:	TMA
Date:	2024.03.06
Checked By:	VJF
Project No:	22-246

Drawing Title

PLUMBING COVER SHEET

Drawing number

P0.1

100 PERCENT SET

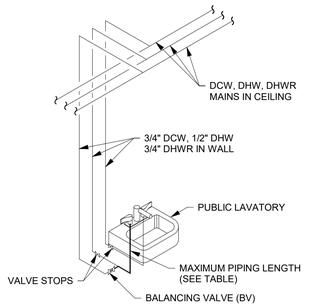

PIPING VOLUME AND MAXIMUM PIPING LENGTHS (IECC TABLE C404.5.1)			
NOMINAL PIPE SIZE (INCHES)	VOLUME (LIQUID OUNCES PER FOOT LENGTH)	MAXIMUM PIPING LENGTH (FEET)	
		PUBLIC LAVATORY FAUCETS	OTHER FIXTURES AND APPLIANCES
1/4	0.33	6	50
3/8	0.75	3	50
1/2	1.5	2	43
3/4	3	0.5	21
1	5	0.5	13
1 1/4	8	0.5	8
1 1/2	11	0.5	6
2 OR LARGER	18	0.5	4

BALANCING VALVE TO BE PROVIDED WITH TAMPER-PROOF ADJUSTMENT
ALL EXPOSED VALVES AND PIPING TO BE INSULATED

13 PIPING VOLUME AND MAXIMUM PIPING LENGTHS
SCALE: NTS

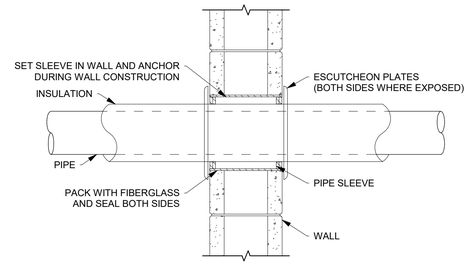

12 PIPE SLEEVE THROUGH INTERIOR WALL
SCALE: NTS

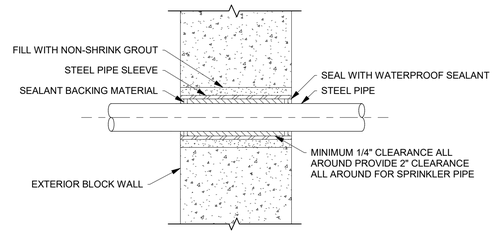

11 PIPE SLEEVE THROUGH EXTERIOR WALL DETAIL
SCALE: NTS

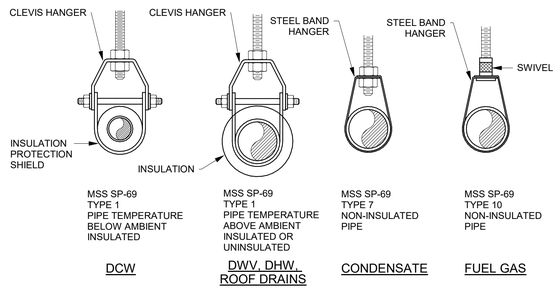

10 PIPE HANGERS DETAIL
SCALE: NTS

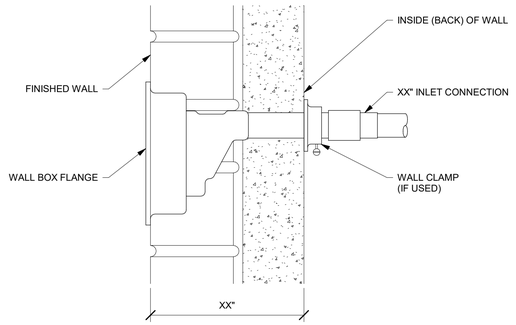

9 FREEZE-PROOF WALL HYDRANT DETAIL
SCALE: NTS

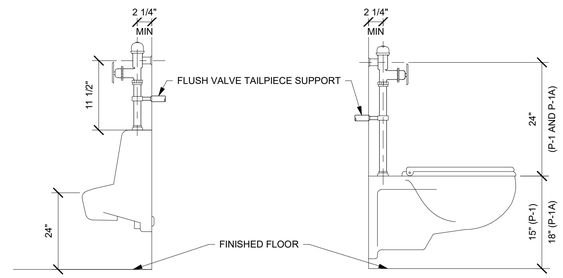

8 FLUSH VALVE SUPPORT DETAIL
SCALE: NTS

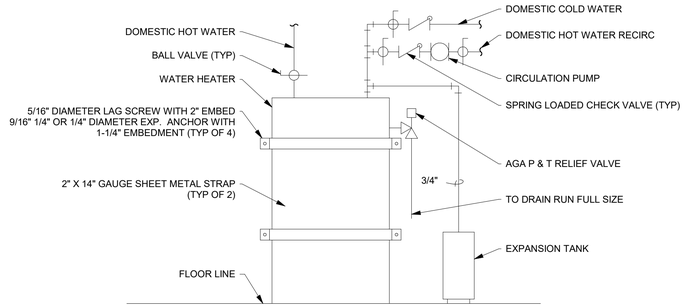

7 WATER HEATER (GAS FIRED)
SCALE: NTS

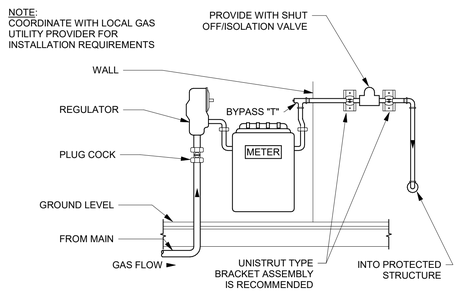

6 GAS METER DETAIL
SCALE: NTS

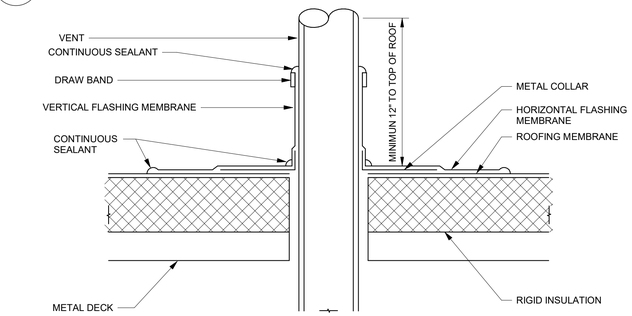

5 VENT THRU ROOF DETAIL
SCALE: NTS

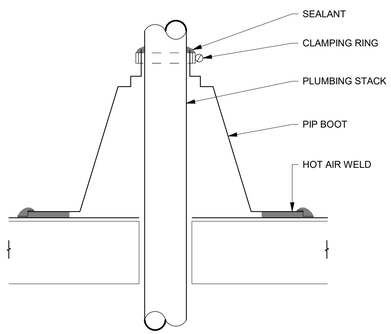

4 ROOF PIPE PENETRATION - PRE-MOLDED BOOT
SCALE: NTS

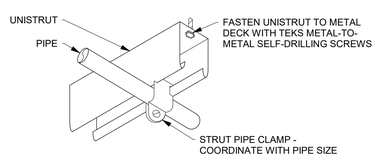

3 PIPE SUPPORT DETAIL
SCALE: NTS

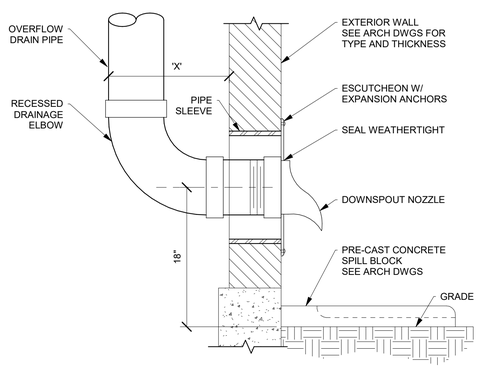

2 DOWNSPOUT NOZZLE DETAIL
SCALE: NTS

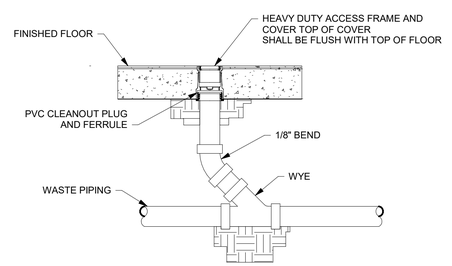

1 FLOOR CLEANOUT (PVC)
SCALE: NTS

100 PERCENT SET

blu line designs
planning | landscape architecture | design
8719 S. Sandy Parkway
Sandy, UT 84070
p 801.679.3157

CLIENT

WPA Architecture
475 N FREEDOM BLVD
PROVO, UTAH 84601
801.374.0800
bfallon@wpa-architecture.com

SPECTRUM ENGINEERS
324 S. State St., Suite 400
Salt Lake City, UT 84111
800-678-7077
801-328-5151
fax: 801-328-5155
www.spectrum-engineers.com

IVY ACRES PARK

1397 WEST COOK LANE
FARMINGTON, UTAH

REVISIONS

NO.	APPROVED	DESCRIPTION

Stamp

REGISTERED PROFESSIONAL ENGINEER
No. 13438797
TYLER M. ANDERSON
10.06.2024
STATE OF UTAH

Designed By:	TMA
Drawn By:	TMA
Date:	2024.03.06
Checked By:	VJF
Project No:	22-246

Drawing Title

PLUMBING DETAILS

Drawing number

P5.1

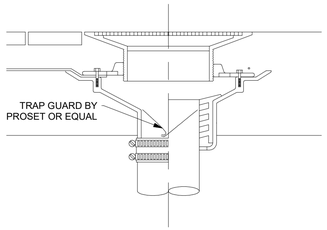

8 FLOOR DRAIN DETAIL
SCALE: NTS

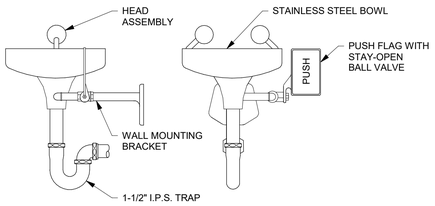

7 EMERGENCY EYEWASH DETAIL
SCALE: NTS

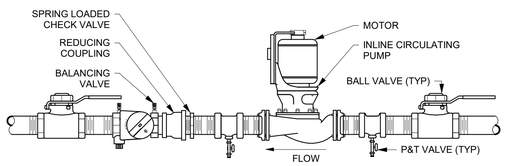

9 PUMP - INLINE DETAIL
SCALE: NTS

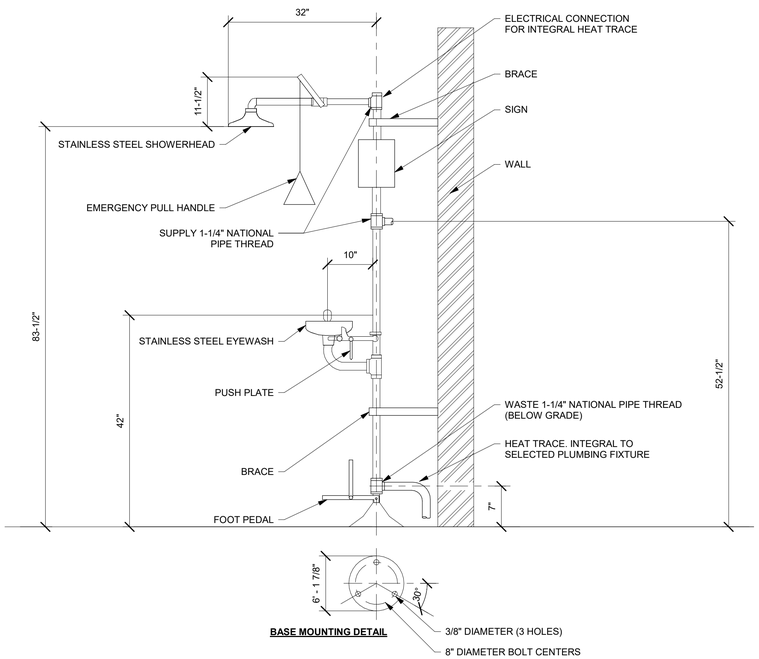

5 EMERGENCY SHOWER BEFORE WALL (FROST PROOF/CORROSION RESISTANT)
SCALE: NTS

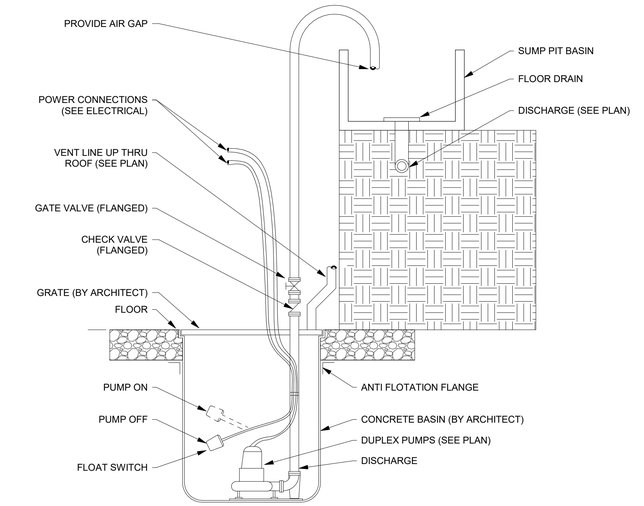

6 DUPLEX SUMP PUMP DETAIL
SCALE: NTS

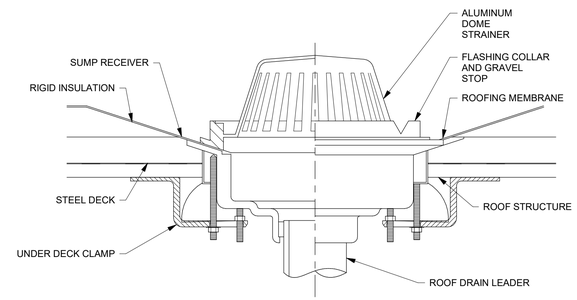

4 ROOF DRAIN
SCALE: NTS

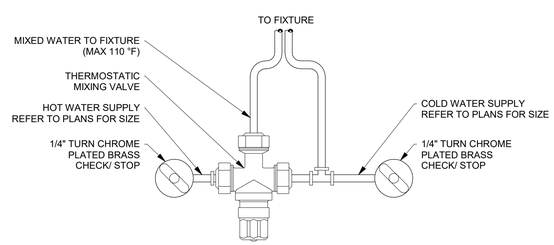

3 THERMOSTATIC MIXING VALVE (AT SINK) DETAIL
SCALE: NTS

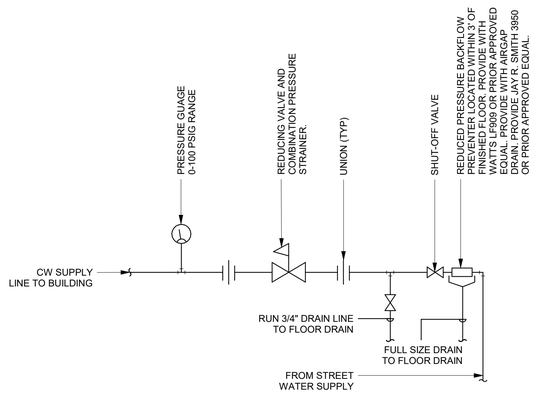

2 PRV STATION DETAIL
SCALE: NTS

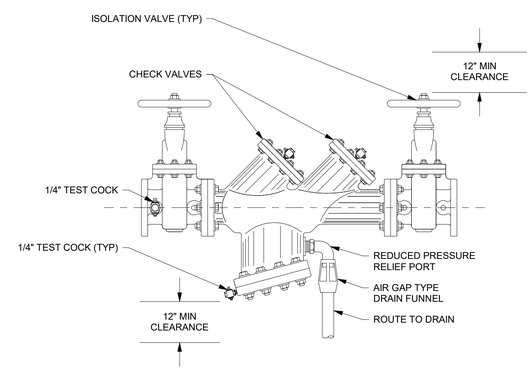

1 BACKFLOW PREVENTER DETAIL
SCALE: NTS

blu line designs
planning | landscape architecture | design
8719 S. Sandy Parkway
Sandy, UT 84070
p 801.679.3157

CLIENT

WPA Architecture
475 N FREEDOM BLVD
PROVO, UTAH 84601
801.374.0800
bfallon@wpa-architecture.com

SPECTRUM ENGINEERS
324 S. State St., Suite 400
Salt Lake City, UT 84111
800-675-7077
801-328-5151
fax: 801-328-5155
www.spectrum-engineers.com

IVY ACRES PARK

1397 WEST COOK LANE
FARMINGTON, UTAH

REVISIONS

NO.	(yy/mm/dd)	DESCRIPTION

Stamp

REGISTERED PROFESSIONAL ENGINEER
No. 13438797
TYLER M. ANDERSON
03.06.2024
STATE OF UTAH

Designed By:	TMA
Drawn By:	TMA
Date:	2024.03.06
Checked By:	VJF
Project No:	22-246

Drawing Title

PLUMBING
DETAILS

Drawing number

P5.2

100 PERCENT SET

SUMP PUMP SCHEDULE

ACCEPTABLE MANUFACTURERS:	REMARKS:	SCHEDULE KEY:
LIBERTY PUMPS GOULDS ZOELLER LITTLE GIANT	(1) PROVIDE WITH COMPLETE PACKAGED SYSTEM INCLUDING SUMP BASIN, FLOATS, CONTROL PANEL, AND JUNCTION BOX WITH DISCONNECTS. (2) PROVIDE WITH BMS INTEGRATION CAPABILITY. (3) PROVIDE FACTORY AUTHORIZED STARTUP OF EQUIPMENT INCLUDING STARTUP OF ANY FACTORY CONTROLS TO ENSURE PROPER SEQUENCING AND/OR COMMUNICATION TO BMS.	PLUMB = DIVISION 22 MECH = DIVISION 23 ELEC = DIVISION 26 MNFR = MANUFACTURER

LABEL	PUMP TYPE	GPM	PUMP HD. (FT)	BASIN TYPE	BASIN SIZE	INLET SIZE (IN)	OUTLET SIZE (IN)	NO. OF POWER CONNECTION(S)	ELECTRICAL				DISCONNECT PROVIDED BY (MECH/ ELEC)	MANUFACTURER	MODEL	REMARKS
									VOLT	PH	Hz	POWER				
SP-1	DUPLEX	56	20	CONCRETE	36"X36"	2"	2"	3	120	1	60	1800W	ELEC	ZOELLER	DUPLEX SYSTEM PUMP: 270 COORDINATE BASIN & LID W/ ARCHITECT	ALL

WATER HEATER (GAS)

ACCEPTABLE MANUFACTURERS:	REMARKS:
LOCHINVAR AO SMITH BRADFORD WHITE RHEEM STATE BOCK	(1) PROVIDE WITH CONCENTRIC VENT KIT. (2) PROVIDE WITH EXPANSION TANK THERM-X-TROL ST-12. (3) PROVIDE WITH UPPER AND LOWER SEISMIC STRAPS WITH TWO 5/16" LAG SCREWS HAVING 2" OF EMBED AT EACH CONNECTION LOCATION. (4) WATER HEATER TO BE ULTRA LOW NOX. (5) PROVIDE ALUMINUM WATER HEATER PAN AND ROUTE DRAIN TO FLOOR DRAIN. (6) INSTALL TO BE ABLE TO BE WINTERIZED (FREEZE PROOF). PER MANUFACTURER INSTALLATION MANUAL, PROVIDE BACKFLOW PREVENTER TO MINIMIZE THE AMOUNT OF COLD AIR ENTERING THROUGHT HE EXHAUST VENTING WHEN THE WATER HEATER IS OFF.

LABEL	LOCATION	TANK SIZE (GAL)	RECOVERY GPH @ 90° ΔT	GAS INPUT (BTUH)	EFFICIENCY	ELECTRICAL				OPERATING WEIGHT (LBS)	MANUFACTURER	MODEL	REMARKS
						VOLTS	PHASE	Hz	FLA				
WH-1	UTILITY 105	100	178	150,000	98	120	1	60	15.0	397	AO SMITH	BTH-150 MXI	2,3,4,5
WH-2	MAINTENANCE SHED 110	3	3	140,000	81	120	1	60	1.5	42	AO SMITH	ATO-110U 200	4,6

RECIRCULATION PUMP SCHEDULE

ACCEPTABLE MANUFACTURERS:	REMARKS:
BELL & GOSSETT ARMSTRONG TACO GRUNDFOS	(1) PROVIDE WITH AQUASTAT AND TIE INTO BUILDING TIMER WITH RUN TIME 1 HOUR BEFORE AND AFTER OCCUPIED SCHEDULE. (2) BALANCE DOMESTIC HOT WATER RECIRCULATING LINE. PROVIDE BALANCING VALVE. PROVIDE P&T PORT ON INLET AND DISCHARGE OF PUMP. PROVIDE BALANCE REPORT TO ENGINEER. (3) PROVIDE WITH BRONZE, PLASTIC, OR STAINLESS STEEL IMPELLER AND STAINLESS STEEL BODY. (4) RUN IN CONSTANT PRESSURE MODE IN CONJUNCTION WITH CALEFFI MODEL 116 THERMAL BALANCING VALVES TO ALLOW PUMP TO RUN AT LOWER SPEED WHEN HOT WATER IS RUNNING. (5) PROVIDE CALEFFI THERMAL BALANCING VALVE SET TO 110 F AT EACH CONNECTION POINT OF RECIRC LINE TO HOT WATER LINE.

LABEL	FLUID				ELECTRICAL				MANUFACTURER	MODEL	REMARKS
	LIQUID TYPE	GPM	HEAD (FT)	MAX. TEMP. (°F)	VOLTS	PHASE	Hz	WATTS			
RCP-1	WATER	5	15.00	110	120	1	60	0.125	BELL & GOSSETT	NRF-25	ALL

PLUMBING FIXTURE SCHEDULE

REFER TO PLUMBING SPECIFICATIONS FOR COMPLETE FIXTURE COMPONENTS

LABEL	DESCRIPTION	WASTE	VENT	CW	HW	MANUFACTURER	MODEL	REMARKS
ES-1	EMERGENCY EYE WASH/FACE WASH (CORROSION RESISTANT)	1 1/2"	1 1/2"	1/2"	1/2"	FIXTURE: BRADLEY TMV: BRADLEY	FIXTURE: S19-220HFP TMV: S19-2000 EFX8	SET TMV AT 85 DEG. F. MUST BE FROST PROOF. MUST BE CORROSION PROOF.
ES-2	EMERGENCY EYE WASH/FACE WASH (CORROSION RESISTANT)	3"	1 1/2"	1"	1"	FIXTURE: HAWS TMV: HAWS	FIXTURE: 8317CTFP TMV: 9201E AXION	MUST BE FREEZE PROOF. MUST BE CORROSION RESISTANT. PROVIDE W/ INTEGRAL HEAT TRACE OPTION. ELECTRICAL: 120V, 15A SET TMV AT 85 DEG. F.
EWC-1	BI-LEVEL ELECTRIC WATER COOLER WITH BOTTLER FILLING STATION (OUTDOORS)	1 1/2"	1 1/2"	1/2"	0"	ELKAY	VRCTL8WSK	OUTDOOR RATED. INSTALL PER ADA STANDARDS. VANDAL RESISTANT. CONFIRM COLOR WITH ARCHITECT. NON-REFRIGERATED. INSTALL TO BE ABLE TO BE WINTERIZED. ELECTRICAL: 120V, 60 HZ, 1A
FCO-1	FLOOR CLEANOUT	0"	0"	0"	0"	ZURN	Z1400 SERIES	SIZE TO MATCH PIPE BEING SERVED
FD-1	FLOOR DRAIN	2"	2"	0"	0"	FIXTURE: ZURN TRAP SEAL: RECTORSEAL	FIXTURE: Z415-BZ1 TRAP SEAL: SURESEAL	TRAP SEAL TO MATCH FD SIZE
HB-1	RECESSED HYDRANT BOX/HOSE BIBB	0"	0"	3/4"	0"	ZURN	FIXTURE: Z1320-C	ENCASED, ANTI-SIPHON, NON-FREEZE, AUTOMATIC DRAINING
L-1	WALL MOUNTED LAVATORY	1 1/2"	1 1/2"	1/2"	1/2"	FIXTURE: BMS FAUCET: BMS INSULATION: TRUEBRO TMV: WEBSTONE	FIXTURE: BSMHS2019PFVD FAUCET: BSM-S-72 INSULATION: LAVGUARD 2 TMV: H-77211W-TG	SET TMV AT 110 DEG. F.
L-2	WALL MOUNTED LAVATORY (ACCESSIBLE)	1 1/2"	1 1/2"	1/2"	1/2"	FIXTURE: BMS FAUCET: BMS INSULATION: TRUEBRO TMV: WEBSTONE	FIXTURE: BSMHS2019PFVD FAUCET: BSM-S-72 INSULATION: LAVGUARD 2 TMV: H-77211W-TG	MOUNT AT ADA HEIGHT SET TMV AT 110 DEG. F.
RD-1	ROOF DRAIN (PRIMARY)	3"	0"	0"	0"	ZURN	ZC121-C	CAST IRON DOME UNDERDECK CLAMP
SRD-1	ROOF DRAIN (SECONDARY)	3"	0"	0"	0"	ZURN	ZC121-C-89	CAST IRON DOME UNDERDECK CLAMP 2" HIGH EXTERNAL WATER DAM
SS-1	SERVICE SINK	3"	2"	3/4"	3/4"	FIXTURE: KOHLER FAUCET: KOHLER	FIXTURE: K67100 FAUCET: K-8907	PROVIDE HOSE AND HOSE HOLDER, MOP HANGER, BUMPER AND WALL GUARDS. FLOOR MOUNT
SS-2	SERVICE SINK	3"	2"	3/4"	3/4"	FIXTURE: REGENCY FAUCET: REGENCY	FIXTURE: 600SMFS2124 FAUCET: 600FMS86	PROVIDE HOSE AND HOSE HOLDER, MOP HANGER, BUMPER AND WALL GUARDS. FREESTANDING INSTALL TO BE ABLE TO BE WINTERIZED.
UR-1	URINAL	1 1/2"	1 1/2"	3/4"	0"	FIXTURE: ACORN FLUSH VALVE: ACORN	FIXTURE: 1709HEU-W-1-0.5 FLUSH VALVE: MTPPFV	PROVIDE WITH PUSH BUTTON. FLUSH VALVE TO BE IN CHASE.
UR-2	URINAL (ACCESSIBLE)	1 1/2"	1 1/2"	3/4"	0"	FIXTURE: ACORN FLUSH VALVE: ACORN	FIXTURE: 1709HEU-W-1-0.5 FLUSH VALVE: MTPPFV	PROVIDE WITH PUSH BUTTON. FLUSH VALVE TO BE IN CHASE. INSTALL PER ADA REQUIREMENTS.
WC-1	WALL MOUNT FLUSH VALVE WATER CLOSET	3"	2"	1 1/2"	0"	FIXTURE: ACORN FLUSH VALVE: ACORN SEAT: ACORN	FIXTURE: 1696-W-1-1.28 FLUSH VALVE: MTPPFV SEAT: PROVIDE INTEGRAL TOILET SEAT	PROVIDE WITH PUSH BUTTON. FLUSH VALVE TO BE IN CHASE.
WC-2	WALL MOUNT FLUSH VALVE WATER CLOSET (ACCESSIBLE)	3"	2"	1 1/2"	0"	FIXTURE: ACORN FLUSH VALVE: ACORN SEAT: ACORN	FIXTURE: 1696-W-1-1.28 FLUSH VALVE: MTPPFV SEAT: PROVIDE INTEGRAL TOILET SEAT	PROVIDE WITH PUSH BUTTON. FLUSH VALVE TO BE IN CHASE. INSTALL PER ADA HEIGHT REQUIREMENTS

100 PERCENT SET

blu line designs
planning | landscape architecture | design
8719 S. Sandy Parkway
Sandy, UT 84070
p 801.679.3157

CLIENT

WPA Architecture
475 N FREEDOM BLVD
PROVO, UTAH 84601
801.374.0800
bfallon@wpa-architecture.com

SPECTRUM ENGINEERS
324 S. State St., Suite 400
Salt Lake City, UT 84111
800-678-7077
801-328-5151
fax: 801-328-5155
www.spectrum-engineers.com

IVY ACRES PARK

1397 WEST COOK LANE
FARMINGTON, UTAH

REVISIONS

NO.	APPROVAL	DESCRIPTION

Stamp



Designed By:	TMA
Drawn By:	TMA
Date:	2024.03.06
Checked By:	VJF
Project No:	22-246

Drawing Title

PLUMBING SCHEDULES

Drawing number

P6.1

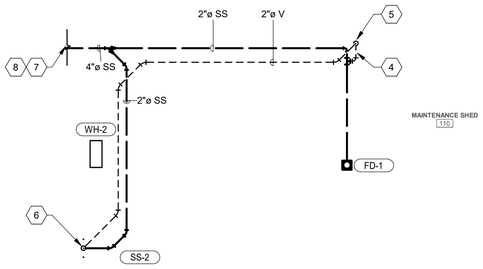

2 LEVEL 1 PLUMBING PLAN - DWV - MAINTENANCE

SCALE: 1/4" = 1'-0"

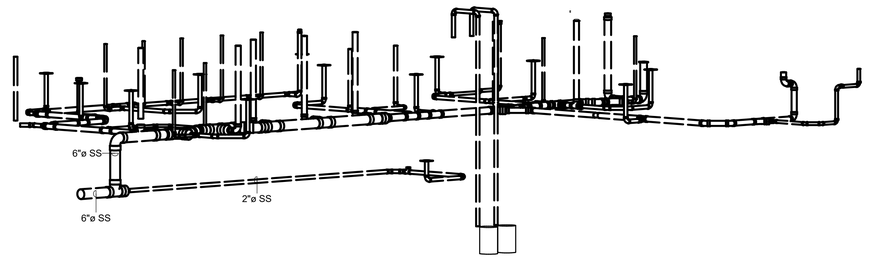

3 PUMP HOUSE SEWER ISOMETRIC

SCALE: NTS

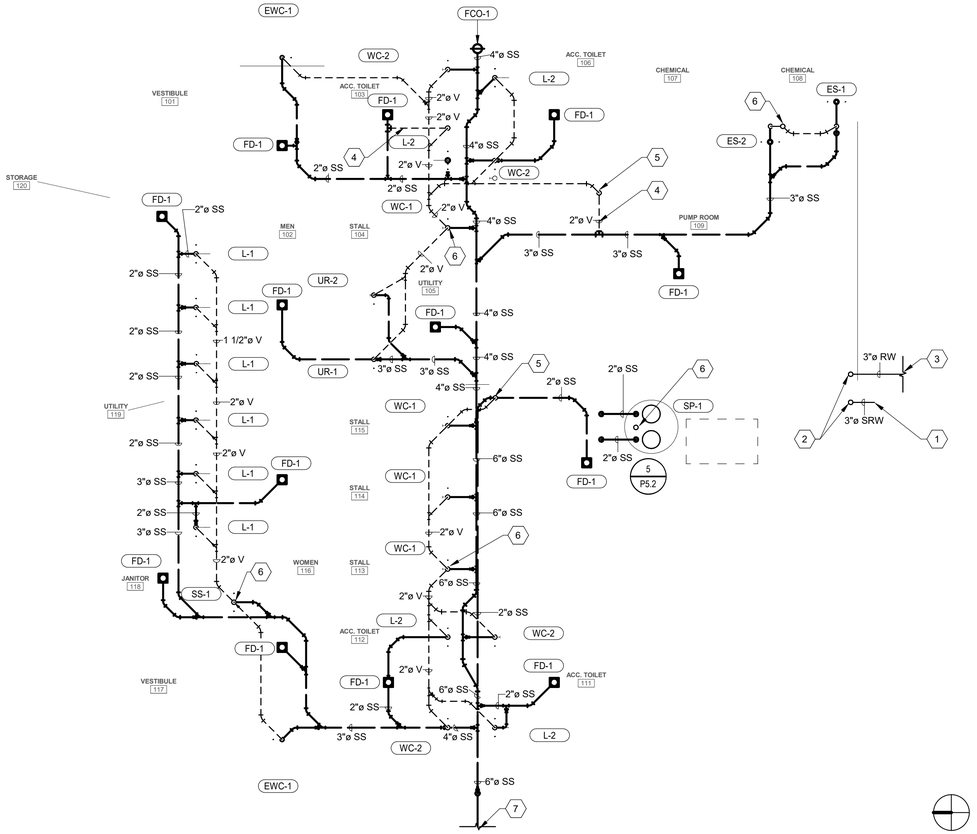

1 LEVEL 1 PLUMBING PLAN - DWV - RESTROOM

SCALE: 1/4" = 1'-0"

PLUMBING GENERAL NOTES

1. THE PLUMBING DRAWINGS SHOW THE GENERAL DESIGN, ARRANGEMENT AND EXTENT OF THE PLUMBING SYSTEM. BECAUSE OF THE SMALL SCALE OF THE DRAWINGS, THESE DRAWINGS DO NOT SHOW ALL OFFSETS, BENDS OR ELBOWS NECESSARY FOR THE COMPLETE INSTALLATION IN THE SPACE PROVIDED. CONTRACTOR SHALL MAKE SUCH SLIGHT ALTERATIONS AS MAY BE NECESSARY TO MAKE THE SYSTEM COMPLETE AND OPERATIONAL IN ACCORDANCE WITH THE DESIGN INTENT. MAJOR DEVIATIONS SUCH AS CHANGES IN COMPONENT SIZES, WEIGHTS, QUANTITIES OR MATERIAL REQUIRE PRIOR APPROVAL BY THE DESIGN ENGINEER.
2. THE DRAWINGS AND SPECIFICATIONS HAVE BEEN PREPARED TO SUPPLEMENT EACH OTHER AND SHALL BE INTERPRETED AS AN INTEGRAL UNIT WITH THE ITEMS SHOWN ON ONE AND NOT THE OTHER BEING FURNISHED AND INSTALLED AS THOUGH SHOWN AND CALLED OUT IN BOTH.
3. THE ENTIRE PLUMBING INSTALLATION SHALL CONFORM TO THE REQUIREMENTS OF THE MOST RECENTLY ADOPTED BUILDING CODES, MECHANICAL CODE, PLUMBING CODE, ELECTRICAL CODE, AND ALL OTHER APPLICABLE CITY, COUNTY, STATE, AND FEDERAL CODES AND REGULATIONS IN EFFECT.
4. THE ENTIRE PLUMBING INSTALLATION SHALL CONFORM TO ANY CODES, RULES, REGULATIONS AND REQUIREMENTS OF THE BUILDING OWNER.
5. PRIOR TO FABRICATION AND INSTALLATION OF ANY PLUMBING COMPONENT THE CONTRACTOR SHALL COORDINATE THE INSTALLATION OF ALL PLUMBING WORK WITH ALL OTHER BUILDING TRADES, INCLUDING BUILDING TRADES HIRED DIRECTLY BY THE OWNER. WHERE CONFLICTS MAY OCCUR, THEY SHALL BE RESOLVED PRIOR TO INSTALLATION.
6. ALL PLUMBING INFORMATION IS NOT SHOWN ON THE PLUMBING DRAWINGS. THE CONTRACTOR SHALL BE RESPONSIBLE FOR COORDINATING ALL INFORMATION ON ALL OTHER CONSTRUCTION DOCUMENTS.
7. THE CONTRACTOR SHALL BE RESPONSIBLE TO REVIEW AND USE, WHERE APPROPRIATE, ALL THE PLUMBING DETAILS SHOWN ON THE DRAWINGS. DETAILS MAY OR MAY NOT BE CALLED OUT ON THE DRAWINGS WITH SYMBOLS OR KEYED NOTES. ANY CHANGES RESULTING FROM FAILURE TO INSTALL THE PLUMBING SYSTEM WITHOUT USING THE INCLUDED DETAILS SHALL BE THE RESPONSIBILITY OF THE CONTRACTOR.
8. ANY PART OF THE PLUMBING INSTALLATION THAT FAILS, IS UNFIT, OR BECOMES DAMAGED DURING CONSTRUCTION SHALL BE REPAIRED OR REPLACED BY THE CONTRACTOR AT NO ADDITIONAL COST TO THE OWNER.
9. PROVIDE PROPER PROVISIONS FOR EXPANSION, CONTRACTION, OR MOVEMENT OF ALL PIPING.
10. PROVIDE LARGE ENOUGH PIPE SLEEVES THROUGH WALL OR FLOOR TO ALLOW FOR ANTICIPATED DIFFERENTIAL MOVEMENT.
11. ALL PIPING SHALL BE SUPPORT WITH CLEVIS HANGERS (MSS TYPE 1). PERFORATED METAL STRAPS OR PLASTIC STRAPPING (PLUMBER TAPE) SHALL NOT BE USED TO SUPPORT OR BRACE ANY PIPE.
12. PROVIDE PIPE HANGERS WITHIN 18-INCHES OF ALL CHANGES OF DIRECTION.
13. PROVIDE SWAY BRACING FOR ALL PIPING 4" AND LARGER AT ALL CHANGES IN DIRECTION GREATER THAN 45-DEGREES.
14. ALL STEEL CLEVIS HANGERS USED TO SUPPORT COPPER PIPING SHALL BE COPPER OR PLASTIC COATED.
15. COPPER PIPING SHALL NOT COME IN CONTACT WITH FIRE TREATED LUMBER. PROVIDE ½" THICK SLIP-ON CLOSED CELL INSULATION WHERE COPPER PIPING IS ADJACENT TO FIRE TREATED LUMBER. CLOSED CELL INSULATION SHALL EXTEND A MINIMUM OF 1-1/2" PAST LUMBER.
16. ALL EXPOSED PIPING SHALL BE INSTALLED IN A NEATLY ARRANGED MANNER PARALLEL TO THE BUILDING STRUCTURE.
17. ALL EXPOSED DOMESTIC WATER PIPE IN OCCUPIED SPACES SHALL BE POLISHED CHROME PLATED.
18. ALL EXPOSED DRAINAGE PIPING IN OCCUPIED SPACES INCLUDING TRAPS UNDER SINKS SHALL BE POLISHED CHROME PLATED.
19. DRAWINGS SHOW GENERAL ARRANGEMENT OF THE DRAIN WASTE AND VENT SYSTEM WITH THE REQUIRED CLEANOUTS. CONTRACTOR SHALL PROVIDE ALL ADDITIONAL CLEANOUTS AS REQUIRED BY THE PLUMBING CODE.
20. ALL SANITARY DRAINAGE SYSTEM PIPING 3" AND LARGER SHALL BE SLOPED IN DIRECTION OF FLOW AT A MINIMUM OF 1/8" PER FOOT.
21. ALL SANITARY DRAINAGE SYSTEM PIPING SMALLER THAN 3" SHALL BE SLOPED IN DIRECTION OF FLOW AT A MINIMUM OF 1/4" PER FOOT.
22. SLOPE VENT SYSTEM TOWARDS DRAINAGE SYSTEM.
23. SIMILAR EQUIPMENT SHALL BE OF THE SAME MANUFACTURER.
24. ALL EQUIPMENT SHALL PROVIDE THE SCHEDULED PERFORMANCE AT THE JOB SITE ELEVATION.
25. FIXTURE AND EQUIPMENT MODEL NUMBERS SHOWN IN PLUMBING FIXTURE SCHEDULE AND PLUMBING EQUIPMENT SCHEDULE ARE SHOWN TO ESTABLISH THE TYPE OF PRODUCT THAT SHALL BE USED. THE SELECTED PRODUCT SHALL MEET THE SCHEDULED PERFORMANCE DATA SHOWN ON THE SCHEDULE EVEN IF A DIFFERENT MODEL IS SUPPLIED THAT IS DIFFERENT THAN THAT SCHEDULED.
26. ALL EQUIPMENT SHALL BE INSTALLED IN STRICT ACCORDANCE WITH THE EQUIPMENT MANUFACTURER'S INSTALLATION INSTRUCTIONS. PROVIDE ALL NECESSARY FITTINGS, TRANSITIONS, VALVES AND OTHER DEVICES AND ACCESSORIES REQUIRED FOR A COMPLETE, WORKABLE INSTALLATION.
27. SEE "PLUMBING FIXTURE SCHEDULE" FOR INDIVIDUAL TRAPS, WASTE, VENT, AND DOMESTIC WATER PIPING FOR INDIVIDUAL FIXTURES.
28. ALL PLUMBING EQUIPMENT SHALL BE LISTED AND LABELED BY AN APPROVED TESTING AGENCY.
29. FIXTURES, EQUIPMENT AND PIPING INSTALLATION SHALL MEET NSF STANDARDS.
30. PLUMBING PIPING SCHEDULE:
    A. DOMESTIC WATER ABOVE GRADE= TYPE L COPPER - SOLDERED
    B. DOMESTIC WATER BELOW GRADE= TYPE K COPPER - SOLDERED
    C. ROOF DRAIN, WASTE & VENT ABOVE GRADE = CAST IRON - HUBLESS COUPLINGS WITH HEAVY DUTY COUPLINGS
    D. ROOF DRAIN, WASTE & VENT BELOW GRADE = DWV SOLID CORE PVC -SOLVENT CEMENT
31. ALL DOMESTIC WATER PIPING TO BE COPPER. ALL HOT WATER AND HOT WATER RECIRCULATING PIPING TO BE INSULATED WITH 1" UP TO 1-1/4" PIPE AND 1-1/2" INSULATION FOR PIPING 1-1/2" AND LARGER. DOMESTIC COLD WATER PIPING TO BE INSULATED WITH 1/2" UP TO 1-1/4" PIPING AND 1" INSULATION FOR PIPING 1-1/2" OR LARGER.
32. THE CONTRACTOR SHALL CLOSELY COORDINATE MECHANICAL AND PLUMBING WITH ELECTRICAL, ARCHITECTURAL, AND BUILDING STRUCTURE.
33. HEAT TRACE ALL PIPING EXTERIOR TO BUILDING ENVELOPE OR IN FREEZING CONDITIONS. HEAT TRACE SHALL BE SELF-REGULATING AND A MINIMUM OF 8 W/FT. WRAP HEAT TRACE AROUND PIPING PER MANUFACTURER'S WRITTEN INSTRUCTIONS. PROVIDE POWER CONNECTION TO ELECTRIC HEAT TRACE. CIRCUIT THROUGH THERMOSTAT CONTROL AND CONNECT TO GFCI CIRCUIT BREAKER IN PANELBOARD WITH 30 MILLI-AMP GFI TRIP. HEAT TRACE IS ASSUMED TO BE 120V 20 AMPS, VERIFY VOLTAGE PRIOR TO INSTALLATION. IT IS ALSO ACCEPTABLE TO PROVIDE LONGER RUNS OF HEAT TRACE BY USING 120V 30 AMP CIRCUITS, 208V 20 AMP CIRCUITS, OR 208V 30 AMP CIRCUITS TO HELP WITH EFFICIENCY.

SHEET KEYNOTES

1	PROVIDE COW TONGUE @ 18" A.F.F.
2	ROUTE RW & SRW DN FROM LVL ABOVE
3	SEE CIVIL SITE PLAN FOR CONTINUATION. ROUTE 5' FROM BUILDING.
4	VENT BELOW FLOOR
5	VENT UP WALL
6	3" VTR. INSTALL 10' FROM ANY NEARBY AIR INTAKE OR 3' ABOVE ANY NEARBY AIR INTAKE.
7	SEE CIVIL SITE PLAN FOR CONTINUATION. ROUTE 5' FROM BUILDING. COORDINATE SLOPE WITH CIVIL DRAWINGS FOR CONNECTION TO GRINDER PUMP.
8	INSTALL 10' FROM DOMESTIC COLD WATER LINE.

100 PERCENT SET

blu line designs
planning | landscape architecture | design
8719 S. Sandy Parkway
Sandy, UT 84070
p 801.679.3157

CLIENT

WPA Architecture
475 N FREEDOM BLVD
PROVO, UTAH 84601
801.374.0800
bfallon@wpa-architecture.com

SPECTRUM ENGINEERS
324 S. State St., Suite 400
Salt Lake City, UT 84111
800-678-7077
801-328-5151
fax: 801-328-5155
www.spectrum-engineers.com

IVY ACRES PARK

1397 WEST COOK LANE
FARMINGTON, UTAH

REVISIONS

NO.	(phasing)	DESCRIPTION

Stamp

REGISTERED PROFESSIONAL ENGINEER
No. 13438797
TYLER M. ANDERSON
03.06.2024
STATE OF UTAH

Designed By:	TMA
Drawn By:	TMA
Date:	2024.03.06
Checked By:	VJF
Project No:	22-246

Drawing Title

LEVEL 1 PLUMBING PLAN - DWV

Drawing number

PL1.1



2 ROOF PLUMBING PLAN - DWV - MAINTENANCE

SCALE: 1/4" = 1'-0"

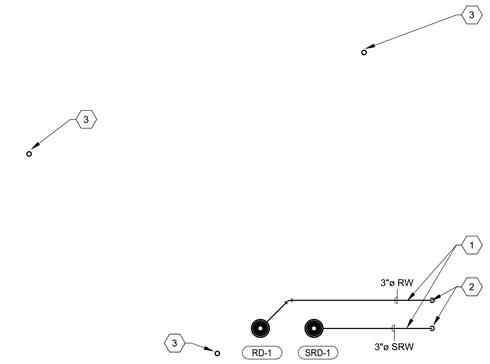

1 ROOF PLUMBING PLAN - DWV - RESTROOM

SCALE: 1/4" = 1'-0"

PLUMBING GENERAL NOTES

1. THE PLUMBING DRAWINGS SHOW THE GENERAL DESIGN, ARRANGEMENT AND EXTENT OF THE PLUMBING SYSTEM. BECAUSE OF THE SMALL SCALE OF THE DRAWINGS, THESE DRAWINGS DO NOT SHOW ALL OFFSETS, BENDS OR ELBOWS NECESSARY FOR THE COMPLETE INSTALLATION IN THE SPACE PROVIDED. CONTRACTOR SHALL MAKE SUCH SLIGHT ALTERATIONS AS MAY BE NECESSARY TO MAKE THE SYSTEM COMPLETE AND OPERATIONAL IN ACCORDANCE WITH THE DESIGN INTENT. MAJOR DEVIATIONS SUCH AS CHANGES IN COMPONENT SIZES, WEIGHTS, QUANTITIES OR MATERIAL REQUIRE PRIOR APPROVAL BY THE DESIGN ENGINEER.
2. THE DRAWINGS AND SPECIFICATIONS HAVE BEEN PREPARED TO SUPPLEMENT EACH OTHER AND SHALL BE INTERPRETED AS AN INTEGRAL UNIT WITH THE ITEMS SHOWN ON ONE AND NOT THE OTHER BEING FURNISHED AND INSTALLED AS THOUGH SHOWN AND CALLED OUT IN BOTH.
3. THE ENTIRE PLUMBING INSTALLATION SHALL CONFORM TO THE REQUIREMENTS OF THE MOST RECENTLY ADOPTED BUILDING CODES, MECHANICAL CODE, PLUMBING CODE, ELECTRICAL CODE, AND ALL OTHER APPLICABLE CITY, COUNTY, STATE, AND FEDERAL CODES AND REGULATIONS IN EFFECT.
4. THE ENTIRE PLUMBING INSTALLATION SHALL CONFORM TO ANY CODES, RULES, REGULATIONS AND REQUIREMENTS OF THE BUILDING OWNER.
5. PRIOR TO FABRICATION AND INSTALLATION OF ANY PLUMBING COMPONENT THE CONTRACTOR SHALL COORDINATE THE INSTALLATION OF ALL PLUMBING WORK WITH ALL OTHER BUILDING TRADES, INCLUDING BUILDING TRADES HIRED DIRECTLY BY THE OWNER. WHERE CONFLICTS MAY OCCUR, THEY SHALL BE RESOLVED PRIOR TO INSTALLATION.
6. ALL PLUMBING INFORMATION IS NOT SHOWN ON THE PLUMBING DRAWINGS. THE CONTRACTOR SHALL BE RESPONSIBLE FOR COORDINATING ALL INFORMATION ON ALL OTHER CONSTRUCTION DOCUMENTS.
7. THE CONTRACTOR SHALL BE RESPONSIBLE TO REVIEW AND USE, WHERE APPROPRIATE, ALL THE PLUMBING DETAILS SHOWN ON THE DRAWINGS. DETAILS MAY OR MAY NOT BE CALLED OUT ON THE DRAWINGS WITH SYMBOLS OR KEYED NOTES. ANY CHANGES RESULTING FROM FAILURE TO INSTALL THE PLUMBING SYSTEM WITHOUT USING THE INCLUDED DETAILS SHALL BE THE RESPONSIBILITY OF THE CONTRACTOR.
8. ANY PART OF THE PLUMBING INSTALLATION THAT FAILS, IS UNFIT, OR BECOMES DAMAGED DURING CONSTRUCTION SHALL BE REPAIRED OR REPLACED BY THE CONTRACTOR AT NO ADDITIONAL COST TO THE OWNER.
9. PROVIDE PROPER PROVISIONS FOR EXPANSION, CONTRACTION, OR MOVEMENT OF ALL PIPING.
10. PROVIDE LARGE ENOUGH PIPE SLEEVES THROUGH WALL OR FLOOR TO ALLOW FOR ANTICIPATED DIFFERENTIAL MOVEMENT.
11. ALL PIPING SHALL BE SUPPORT WITH CLEVIS HANGERS (MSS TYPE 1). PERFORATED METAL STRAPS OR PLASTIC STRAPPING (PLUMBER TAPE) SHALL NOT BE USED TO SUPPORT OR BRACE ANY PIPE.
12. PROVIDE PIPE HANGERS WITHIN 18-INCHES OF ALL CHANGES OF DIRECTION.
13. PROVIDE SWAY BRACING FOR ALL PIPING 4" AND LARGER AT ALL CHANGES IN DIRECTION GREATER THAN 45-DEGREES.
14. ALL STEEL CLEVIS HANGERS USED TO SUPPORT COPPER PIPING SHALL BE COPPER OR PLASTIC COATED.
15. COPPER PIPING SHALL NOT COME IN CONTACT WITH FIRE TREATED LUMBER. PROVIDE ½" THICK SLIP-ON CLOSED CELL INSULATION WHERE COPPER PIPING IS ADJACENT TO FIRE TREATED LUMBER. CLOSED CELL INSULATION SHALL EXTEND A MINIMUM OF 1-1/2" PAST LUMBER.
16. ALL EXPOSED PIPING SHALL BE INSTALLED IN A NEATLY ARRANGED MANNER PARALLEL TO THE BUILDING STRUCTURE.
17. ALL EXPOSED DOMESTIC WATER PIPE IN OCCUPIED SPACES SHALL BE POLISHED CHROME PLATED.
18. ALL EXPOSED DRAINAGE PIPING IN OCCUPIED SPACES INCLUDING TRAPS UNDER SINKS SHALL BE POLISHED CHROME PLATED.
19. DRAWINGS SHOW GENERAL ARRANGEMENT OF THE DRAIN WASTE AND VENT SYSTEM WITH THE REQUIRED CLEANOUTS. CONTRACTOR SHALL PROVIDE ALL ADDITIONAL CLEANOUTS AS REQUIRED BY THE PLUMBING CODE.
20. ALL SANITARY DRAINAGE SYSTEM PIPING 3" AND LARGER SHALL BE SLOPED IN DIRECTION OF FLOW AT A MINIMUM OF 1/8" PER FOOT.
21. ALL SANITARY DRAINAGE SYSTEM PIPING SMALLER THAN 3" SHALL BE SLOPED IN DIRECTION OF FLOW AT A MINIMUM OF 1/4" PER FOOT.
22. SLOPE VENT SYSTEM TOWARDS DRAINAGE SYSTEM.
23. SIMILAR EQUIPMENT SHALL BE OF THE SAME MANUFACTURER.
24. ALL EQUIPMENT SHALL PROVIDE THE SCHEDULED PERFORMANCE AT THE JOB SITE ELEVATION.
25. FIXTURE AND EQUIPMENT MODEL NUMBERS SHOWN IN PLUMBING FIXTURE SCHEDULE AND PLUMBING EQUIPMENT SCHEDULE ARE SHOWN TO ESTABLISH THE TYPE OF PRODUCT THAT SHALL BE USED. THE SELECTED PRODUCT SHALL MEET THE SCHEDULED PERFORMANCE DATA SHOWN ON THE SCHEDULE EVEN IF A DIFFERENT MODEL IS SUPPLIED THAT IS DIFFERENT THAN THAT SCHEDULED.
26. ALL EQUIPMENT SHALL BE INSTALLED IN STRICT ACCORDANCE WITH THE EQUIPMENT MANUFACTURER'S INSTALLATION INSTRUCTIONS. PROVIDE ALL NECESSARY FITTINGS, TRANSITIONS, VALVES AND OTHER DEVICES AND ACCESSORIES REQUIRED FOR A COMPLETE, WORKABLE INSTALLATION.
27. SEE "PLUMBING FIXTURE SCHEDULE" FOR INDIVIDUAL TRAPS, WASTE, VENT, AND DOMESTIC WATER PIPING FOR INDIVIDUAL FIXTURES.
28. ALL PLUMBING EQUIPMENT SHALL BE LISTED AND LABELED BY AN APPROVED TESTING AGENCY.
29. FIXTURES, EQUIPMENT AND PIPING INSTALLATION SHALL MEET NSF STANDARDS.
30. PLUMBING PIPING SCHEDULE:
    A. DOMESTIC WATER ABOVE GRADE= TYPE L COPPER - SOLDERED
    B. DOMESTIC WATER BELOW GRADE= TYPE K COPPER - SOLDERED
    C. ROOF DRAIN, WASTE & VENT ABOVE GRADE = CAST IRON - HUBLESS COUPLINGS WITH HEAVY DUTY COUPLINGS
    D. ROOF DRAIN, WASTE & VENT BELOW GRADE = DWV SOLID CORE PVC -SOLVENT CEMENT
31. ALL DOMESTIC WATER PIPING TO BE COPPER. ALL HOT WATER AND HOT WATER RECIRCULATING PIPING TO BE INSULATED WITH 1" UP TO 1-1/4" PIPE AND 1-1/2" INSULATION FOR PIPING 1-1/2" AND LARGER. DOMESTIC COLD WATER PIPING TO BE INSULATED WITH 1/2" UP TO 1-1/4" PIPING AND 1" INSULATION FOR PIPING 1-1/2" OR LARGER.
32. THE CONTRACTOR SHALL CLOSELY COORDINATE MECHANICAL AND PLUMBING WITH ELECTRICAL, ARCHITECTURAL, AND BUILDING STRUCTURE.
33. HEAT TRACE ALL PIPING EXTERIOR TO BUILDING ENVELOPE OR IN FREEZING CONDITIONS. HEAT TRACE SHALL BE SELF-REGULATING AND A MINIMUM OF 8 W/FT. WRAP HEAT TRACE AROUND PIPING PER MANUFACTURER'S WRITTEN INSTRUCTIONS. PROVIDE POWER CONNECTION TO ELECTRIC HEAT TRACE. CIRCUIT THROUGH THERMOSTAT CONTROL AND CONNECT TO GFCI CIRCUIT BREAKER IN PANELBOARD WITH 30 MILLI-AMP GFI TRIP. HEAT TRACE IS ASSUMED TO BE 120V 20 AMPS, VERIFY VOLTAGE PRIOR TO INSTALLATION. IT IS ALSO ACCEPTABLE TO PROVIDE LONGER RUNS OF HEAT TRACE BY USING 120V 30 AMP CIRCUITS, 208V 20 AMP CIRCUITS, OR 208V 30 AMP CIRCUITS TO HELP WITH EFFICIENCY.

SHEET KEYNOTES

1	ROUTE BELOW STRUCTURE
2	ROUTE RW & SRW DN TO LVL BELOW
3	3" VTR. INSTALL 10' FROM ANY NEARBY AIR INTAKE OR 3' ABOVE ANY NEARBY AIR INTAKE.

100 PERCENT SET

blu line designs
planning | landscape architecture | design
8719 S. Sandy Parkway
Sandy, UT 84070
p 801.679.3157

CLIENT

WPA Architecture
475 N FREEDOM BLVD
PROVO, UTAH 84601
801.374.0800
bfallon@wpa-architecture.com

SPECTRUM ENGINEERS
324 S. State St., Suite 400
Salt Lake City, UT 84111
800-678-7077
801-328-5151
fax: 801-328-5155
www.spectrum-engineers.com

IVY ACRES PARK

1397 WEST COOK LANE
FARMINGTON, UTAH

REVISIONS

NO.	symmetry	DESCRIPTION

Stamp

LICENSED PROFESSIONAL ENGINEER
No. 13438797
TYLER M. ANDERSON
03.06.2024
STATE OF UTAH

Designed By:	TMA
Drawn By:	TMA
Date:	2024.03.06
Checked By:	VJF
Project No:	22-246

Drawing Title

ROOF PLUMBING PLAN - DWV

Drawing number

PL1.2

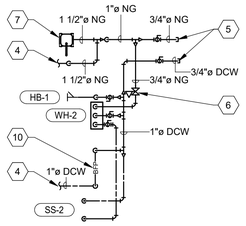

MAINTENANCE SHED
110

2 LEVEL 1 PLUMBING PLAN - WATER - MAINTENANCE

SCALE: 1/4" = 1'-0"

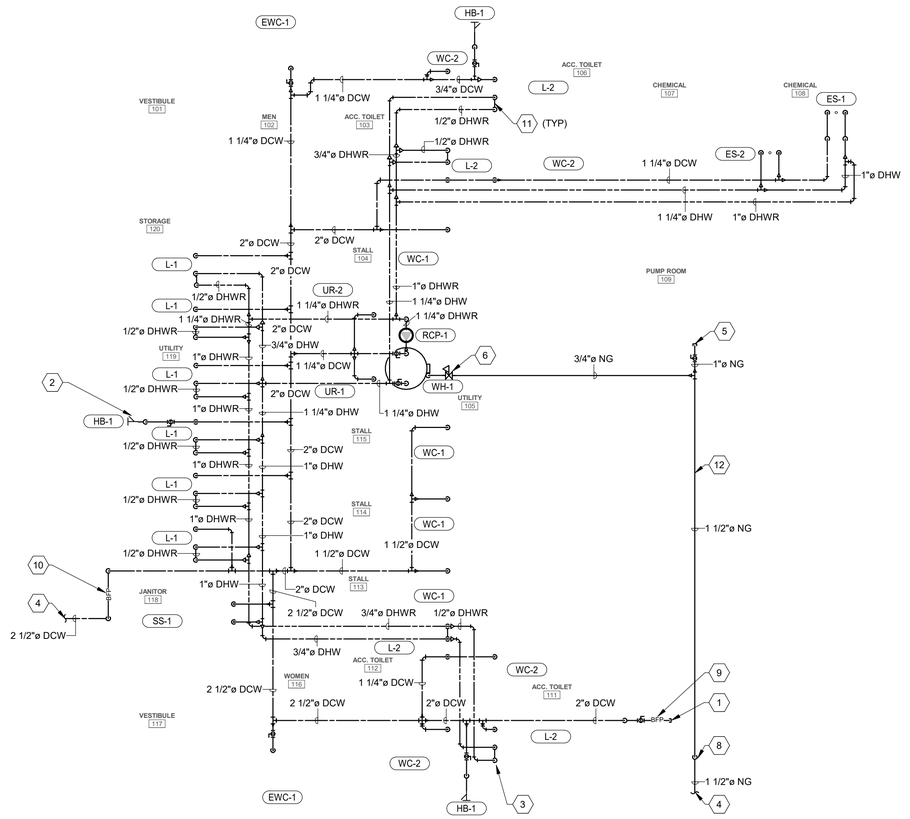

1 LEVEL 1 PLUMBING PLAN - WATER - RESTROOM

SCALE: 1/4" = 1'-0"

PLUMBING GENERAL NOTES

1. THE PLUMBING DRAWINGS SHOW THE GENERAL DESIGN, ARRANGEMENT AND EXTENT OF THE PLUMBING SYSTEM. BECAUSE OF THE SMALL SCALE OF THE DRAWINGS, THESE DRAWINGS DO NOT SHOW ALL OFFSETS, BENDS OR ELBOWS NECESSARY FOR THE COMPLETE INSTALLATION IN THE SPACE PROVIDED. CONTRACTOR SHALL MAKE SUCH SLIGHT ALTERATIONS AS MAY BE NECESSARY TO MAKE THE SYSTEM COMPLETE AND OPERATIONAL IN ACCORDANCE WITH THE DESIGN INTENT. MAJOR DEVIATIONS SUCH AS CHANGES IN COMPONENT SIZES, WEIGHTS, QUANTITIES OR MATERIAL REQUIRE PRIOR APPROVAL BY THE DESIGN ENGINEER.
2. THE DRAWINGS AND SPECIFICATIONS HAVE BEEN PREPARED TO SUPPLEMENT EACH OTHER AND SHALL BE INTERPRETED AS AN INTEGRAL UNIT WITH THE ITEMS SHOWN ON ONE AND NOT THE OTHER BEING FURNISHED AND INSTALLED AS THOUGH SHOWN AND CALLED OUT IN BOTH.
3. THE ENTIRE PLUMBING INSTALLATION SHALL CONFORM TO THE REQUIREMENTS OF THE MOST RECENTLY ADOPTED BUILDING CODES, MECHANICAL CODE, PLUMBING CODE, ELECTRICAL CODE, AND ALL OTHER APPLICABLE CITY, COUNTY, STATE, AND FEDERAL CODES AND REGULATIONS IN EFFECT.
4. THE ENTIRE PLUMBING INSTALLATION SHALL CONFORM TO ANY CODES, RULES, REGULATIONS AND REQUIREMENTS OF THE BUILDING OWNER.
5. PRIOR TO FABRICATION AND INSTALLATION OF ANY PLUMBING COMPONENT THE CONTRACTOR SHALL COORDINATE THE INSTALLATION OF ALL PLUMBING WORK WITH ALL OTHER BUILDING TRADES, INCLUDING BUILDING TRADES HIRED DIRECTLY BY THE OWNER. WHERE CONFLICTS MAY OCCUR, THEY SHALL BE RESOLVED PRIOR TO INSTALLATION.
6. ALL PLUMBING INFORMATION IS NOT SHOWN ON THE PLUMBING DRAWINGS. THE CONTRACTOR SHALL BE RESPONSIBLE FOR COORDINATING ALL INFORMATION ON ALL OTHER CONSTRUCTION DOCUMENTS.
7. THE CONTRACTOR SHALL BE RESPONSIBLE TO REVIEW AND USE, WHERE APPROPRIATE, ALL THE PLUMBING DETAILS SHOWN ON THE DRAWINGS. DETAILS MAY OR MAY NOT BE CALLED OUT ON THE DRAWINGS WITH SYMBOLS OR KEYED NOTES. ANY CHANGES RESULTING FROM FAILURE TO INSTALL THE PLUMBING SYSTEM WITHOUT USING THE INCLUDED DETAILS SHALL BE THE RESPONSIBILITY OF THE CONTRACTOR.
8. ANY PART OF THE PLUMBING INSTALLATION THAT FAILS, IS UNFIT, OR BECOMES DAMAGED DURING CONSTRUCTION SHALL BE REPAIRED OR REPLACED BY THE CONTRACTOR AT NO ADDITIONAL COST TO THE OWNER.
9. PROVIDE PROPER PROVISIONS FOR EXPANSION, CONTRACTION, OR MOVEMENT OF ALL PIPING.
10. PROVIDE LARGE ENOUGH PIPE SLEEVES THROUGH WALL OR FLOOR TO ALLOW FOR ANTICIPATED DIFFERENTIAL MOVEMENT.
11. ALL PIPING SHALL BE SUPPORT WITH CLEVIS HANGERS (MSS TYPE 1). PERFORATED METAL STRAPS OR PLASTIC STRAPPING (PLUMBER TAPE) SHALL NOT BE USED TO SUPPORT OR BRACE ANY PIPE.
12. PROVIDE PIPE HANGERS WITHIN 18-INCHES OF ALL CHANGES OF DIRECTION.
13. PROVIDE SWAY BRACING FOR ALL PIPING 4" AND LARGER AT ALL CHANGES IN DIRECTION GREATER THAN 45-DEGREES.
14. ALL STEEL CLEVIS HANGERS USED TO SUPPORT COPPER PIPING SHALL BE COPPER OR PLASTIC COATED.
15. COPPER PIPING SHALL NOT COME IN CONTACT WITH FIRE TREATED LUMBER. PROVIDE ½" THICK SLIP-ON CLOSED CELL INSULATION WHERE COPPER PIPING IS ADJACENT TO FIRE TREATED LUMBER. CLOSED CELL INSULATION SHALL EXTEND A MINIMUM OF 1-1/2" PAST LUMBER.
16. ALL EXPOSED PIPING SHALL BE INSTALLED IN A NEATLY ARRANGED MANNER PARALLEL TO THE BUILDING STRUCTURE.
17. ALL EXPOSED DOMESTIC WATER PIPE IN OCCUPIED SPACES SHALL BE POLISHED CHROME PLATED.
18. ALL EXPOSED DRAINAGE PIPING IN OCCUPIED SPACES INCLUDING TRAPS UNDER SINKS SHALL BE POLISHED CHROME PLATED.
19. DRAWINGS SHOW GENERAL ARRANGEMENT OF THE DRAIN WASTE AND VENT SYSTEM WITH THE REQUIRED CLEANOUTS. CONTRACTOR SHALL PROVIDE ALL ADDITIONAL CLEANOUTS AS REQUIRED BY THE PLUMBING CODE.
20. ALL SANITARY DRAINAGE SYSTEM PIPING 3" AND LARGER SHALL BE SLOPED IN DIRECTION OF FLOW AT A MINIMUM OF 1/8" PER FOOT.
21. ALL SANITARY DRAINAGE SYSTEM PIPING SMALLER THAN 3" SHALL BE SLOPED IN DIRECTION OF FLOW AT A MINIMUM OF 1/4" PER FOOT.
22. SLOPE VENT SYSTEM TOWARDS DRAINAGE SYSTEM.
23. SIMILAR EQUIPMENT SHALL BE OF THE SAME MANUFACTURER.
24. ALL EQUIPMENT SHALL PROVIDE THE SCHEDULED PERFORMANCE AT THE JOB SITE ELEVATION.
25. FIXTURE AND EQUIPMENT MODEL NUMBERS SHOWN IN PLUMBING FIXTURE SCHEDULE AND PLUMBING EQUIPMENT SCHEDULE ARE SHOWN TO ESTABLISH THE TYPE OF PRODUCT THAT SHALL BE USED. THE SELECTED PRODUCT SHALL MEET THE SCHEDULED PERFORMANCE DATA SHOWN ON THE SCHEDULE EVEN IF A DIFFERENT MODEL IS SUPPLIED THAT IS DIFFERENT THAN THAT SCHEDULED.
26. ALL EQUIPMENT SHALL BE INSTALLED IN STRICT ACCORDANCE WITH THE EQUIPMENT MANUFACTURER'S INSTALLATION INSTRUCTIONS. PROVIDE ALL NECESSARY FITTINGS, TRANSITIONS, VALVES AND OTHER DEVICES AND ACCESSORIES REQUIRED FOR A COMPLETE, WORKABLE INSTALLATION.
27. SEE "PLUMBING FIXTURE SCHEDULE" FOR INDIVIDUAL TRAPS, WASTE, VENT, AND DOMESTIC WATER PIPING FOR INDIVIDUAL FIXTURES.
28. ALL PLUMBING EQUIPMENT SHALL BE LISTED AND LABELED BY AN APPROVED TESTING AGENCY.
29. FIXTURES, EQUIPMENT AND PIPING INSTALLATION SHALL MEET NSF STANDARDS.
30. PLUMBING PIPING SCHEDULE:
    A. DOMESTIC WATER ABOVE GRADE= TYPE L COPPER - SOLDERED
    B. DOMESTIC WATER BELOW GRADE= TYPE K COPPER - SOLDERED
    C. ROOF DRAIN, WASTE & VENT ABOVE GRADE = CAST IRON - HUBLESS COUPLINGS WITH HEAVY DUTY COUPLINGS
    D. ROOF DRAIN, WASTE & VENT BELOW GRADE = DWV SOLID CORE PVC -SOLVENT CEMENT
31. ALL DOMESTIC WATER PIPING TO BE COPPER. ALL HOT WATER AND HOT WATER RECIRCULATING PIPING TO BE INSULATED WITH 1" UP TO 1-1/4" PIPE AND 1-1/2" INSULATION FOR PIPING 1-1/2" AND LARGER. DOMESTIC COLD WATER PIPING TO BE INSULATED WITH 1/2" UP TO 1-1/4" PIPING AND 1" INSULATION FOR PIPING 1-1/2" OR LARGER.
32. THE CONTRACTOR SHALL CLOSELY COORDINATE MECHANICAL AND PLUMBING WITH ELECTRICAL, ARCHITECTURAL, AND BUILDING STRUCTURE.
33. HEAT TRACE ALL PIPING EXTERIOR TO BUILDING ENVELOPE OR IN FREEZING CONDITIONS. HEAT TRACE SHALL BE SELF-REGULATING AND A MINIMUM OF 8 W/FT. WRAP HEAT TRACE AROUND PIPING PER MANUFACTURER'S WRITTEN INSTRUCTIONS. PROVIDE POWER CONNECTION TO ELECTRIC HEAT TRACE. CIRCUIT THROUGH THERMOSTAT CONTROL AND CONNECT TO GFCI CIRCUIT BREAKER IN PANELBOARD WITH 30 MILLI-AMP GFI TRIP. HEAT TRACE IS ASSUMED TO BE 120V 20 AMPS, VERIFY VOLTAGE PRIOR TO INSTALLATION. IT IS ALSO ACCEPTABLE TO PROVIDE LONGER RUNS OF HEAT TRACE BY USING 120V 30 AMP CIRCUITS, 208V 20 AMP CIRCUITS, OR 208V 30 AMP CIRCUITS TO HELP WITH EFFICIENCY.

SHEET KEYNOTES

1 2" CW LINE TO PROVIDE 50 GPM TO PUMP PIT. PROVIDE MANUAL SHUTOFF VALVE. SEE WATER DESIGN CONSULTANT PLANS FOR CONTINUATION. INSTALL WITHIN 3' OF FINISHED FLOOR

2 INSTALL BELOW COUNTERTOP. COORDINATE EXACT LOCATION WITH ARCHITECT

3 ROUTE DHWR WITHIN 2' OF L-1 (TYP)

4 SEE CIVIL SITE PLAN FOR CONTINUATION. ROUTE 5' FROM BUILDING.

5 PROVIDE CAP & SHUT OFF VALVE FOR FUTURE CONNECTION.

6 PROVIDE W/ SHUT OFF AND PRESSURE REGULATOR. PROVIDE W/ 2 LB TO 4 OZ VENTLESS PRESSURE REGULATOR BY PIETRO FIORENTINI (OR APPROVED EQUAL)

7 GAS METER PROVIDED BY UTILITY COMPANY. GAS METER INFORMATION
LONGEST LENGTH: 475
SUM MBH: 290 (WH) + 100 (EXTERIOR GAS FIRE PIT) + 700 (FUTURE) = 1,283
OUTLET PRESSURE: 2 LB

8 PROVIDE SHUT OFF VALVE. CONTINUATION FROM MAINTENANCE BUILDING.

9 SEE BACKFLOW PREVENTER DETAIL.

10 SEE PRV AND SHUT OFF VALVE DETAIL.

11 PROVIDE CALEFFI 116 THERMOSTATIC MIXING VALVE. SET AT 110 DEGREES FAHRENHEIT. INSTALL IN AN ACCESSIBLE LOCATION AT DHW TO DHWR.

12 PROVIDE CORROSION RESISTANT COATING TO NATURAL GAS PIPING IN PUMP ROOM.

blu line designs
planning | landscape architecture | design
8719 S. Sandy Parkway
Sandy, UT 84070
p 801.679.3157

CLIENT

WPA Architecture
475 N FREEDOM BLVD
PROVO, UTAH 84601
801.374.0800
bfallon@wpa-architecture.com

SPECTRUM ENGINEERS
324 S. State St., Suite 400
Salt Lake City, UT 84111
800-678-7077
801-328-5151
fax: 801-328-5155
www.spectrum-engineers.com

IVY ACRES PARK
1397 WEST COOK LANE
FARMINGTON, UTAH

REVISIONS

NO.	APPROVAL	DESCRIPTION

Stamp

REGISTERED PROFESSIONAL ENGINEER
No. 13438787
TYLER M. ANDERSON
03.06.2024
STATE OF UTAH

Designed By:	TMA
Drawn By:	TMA
Date:	2024.03.06
Checked By:	V.F.
Project No:	22-246

Drawing Title

LEVEL 1 PLUMBING PLAN - WATER

Drawing Number

PL1.3

100 PERCENT SET

SECURITY							
###	IP CAMERA - SEE SCHEDULE	AS NOTED	14. 15.	DH	DOOR HOLD OPEN	AS NOTED	17.
NVR	NETWORK VIDEO RECORDER			ES	ELECTRIC DOOR STRIKE	DOOR JAMB	12.
DC 1	SECURITY SYSTEM DOOR CONTACT	DOOR JAMB		DP	DOOR POSITION INTRUSION SWITCH	DOOR JAMB	12.
DC 2	SECURITY SYSTEM GARAGE DOOR CONTACT	+96" OR AS NOTED	17.	EL	ELECTRIC DOOR LOCK	DOOR JAMB	12.
DB X	DURESS PUSHBUTTON: T = TRANSMITTER, R = RECEIVER, H = HARDWIRED	AS NOTED	17.	RX	ACCESS CONTROL SYSTEM, REQUEST TO EXIT		17.
MD MD	INTRUSION MOTION DETECTOR SOLID = WALL MOUNTED, DASHED = CEILING		17.	EC	ELECTRIC CRASH BAR	DOOR HARDWARE	12.
GB GB	GLASS BREAK DETECTOR: SOLID = WALL MOUNTED, DASHED = CEILING		17.	CR	ACCESS CONTROL CARD READER	+46"	2.
AS AS	ALARM SIREN		17.	BR	ACCESS CONTROL BIOMETRIC READER	+46"	2.
PI	INTRUSION SYSTEM POP-IT		17.	KS	KEY OVERRIDE SWITCH	+46"	2.
KP	INTRUSION SYSTEM KEYPAD (ARM/DISARM)	+46"	2.	ICR	INTEGRATED CARD READER AND LOCK	+46"	2.
INT	INTERCOM STATION	+46"	2.	KCR	KEYPAD CARD READER COMBO	+46"	2.
ML	MAGNETIC LOCK			X	MOMENTARY PUSH BUTTON. DR = DOOR RELEASE, LD = LOCKDOWN, PTE = PUSH TO EXIT	AS NOTED	9.
				R	SECURITY RELAY		
TELECOMMUNICATIONS							
W	WALL PHONE	+60" OR AS NOTED	2.	WAP WAP	WIRELESS ACCESS POINT, TWO CABLES SOLID = WALL, DASHED = CEILING	WALL / CEILING	11.
	DATA OUTLET, ONE CABLE	+18" OR AS NOTED	2. 9. 11.	SPL	SPLITTER	ABOVE CEILING	
	DATA OUTLET, TWO CABLES	+18" OR AS NOTED	2. 9. 11.	VIA	VIA	ABOVE CEILING	
	DATA OUTLET, THREE CABLES	+18" OR AS NOTED	2. 9. 11.	BDA	FIBER BDA	ABOVE CEILING	
X	DATA OUTLET, "X" INDICATES QUANTITY	+18" OR AS NOTED	2. 9. 11.	ANT XX	ANTENNA PS = PUBLIC SAFETY COM = CELLULAR/COMMERCIAL	CEILING	
	TELEVISION OUTLET	+18" OR AS NOTED	9. 11.				
FIRE ALARM							
	BELL	+94"	2.	S	SMOKE DETECTOR	CEILING	
C	CHIME / STROBE	+94" / CEILING	2.	SC	SMOKE/CARBON MONOXIDE DETECTOR	CEILING	
F	FIRE ALARM MANUAL STATION	+46"	2.	C	CARBON MONOXIDE DETECTOR	CEILING	
H	FIRE ALARM SIGNAL HORN / STROBE	+94" / CEILING	2.	H	HEAT DETECTOR	CEILING	
H CLG	CONCEALED FIRE ALARM HORN / STROBE	CEILING		D	DUCT SMOKE DETECTOR		MTD. IN DUCT
H	CONCEALED FIRE ALARM HORN / STROBE WALL	+94"	2.	D	FIRE/SMOKE DAMPER		
E	FIRE ALARM SPEAKER / STROBE	+94" / CEILING	2.		DOOR HOLDER	AS NOTED	
E CLG	CONCEALED FIRE ALARM SPEAKER / STROBE	CEILING		FS	FLOW SWITCH		
E	CONCEALED FIRE ALARM SPEAKER / STROBE WALL	+94"	2.	TS	TAMPER SWITCH		
S	FIRE ALARM STROBE	+94" / CEILING	2.	WF	WATER FLOOD INDICATOR		
S CLG	CONCEALED FIRE ALARM STROBE	CEILING			O.S. & Y. VALVE		SEE DIAGRAM
S	CONCEALED FIRE ALARM STROBE WALL	+94"	2.	R	FIRE ALARM RELAY OR SECURITY RELAY		
K	FIRE ALARM SPEAKER ONLY	+94" / CEILING	2.	CM	FIRE ALARM CONTROL MODULE		
B	FIRE ALARM STROBE WITH BLUE COLORED LENS (CO VISUAL ALARM)	+94" / CEILING	2.	MM	FIRE ALARM MONITOR MODULE		
ANN	FIRE ALARM ANNUNCIATOR PANEL	+58"	2. SEE DIAGRAM	TWZ	TWO-WAY COMMUNICATION SYSTEM CONTROL PANEL	+46"	2.
V	ASPIRATING SMOKE DETECTION SYSTEM	CEILING	MOUNT AS PER MFR.	TW	TWO-WAY COMMUNICATION SYSTEM CALL STATION	+46"	2.
B	BEAM DETECTOR		MOUNT AS PER MFR.	R	FIRE ALARM RELAY		

ABBREVIATIONS INDEX

ABBREV.	DESCRIPTION	ABBREV.	DESCRIPTION
#	NUMBER	MH	MANHOLE
AC	ALTERNATING CURRENT	MIC	MICROPHONE
A.F.F.	ABOVE FINISH FLOOR	MIN	MINIMUM
AIC	AMPS INTERRUPTING CAPACITY	MTG	MOUNTING
AM	AMPS METER	MTR	MOTOR
AMP	AMPERE	N/A	NOT APPLICABLE
ANN	ANNUNCIATOR	NC	NORMALLY CLOSED
ATS	AUTOMATIC TRANSFER SWITCH	NEC	NATIONAL ELECTRICAL CODE
AUX	AUXILIARY	NEMA	NATIONAL ELECT. MANUFAC. ASSOC.
AWG	AMERICAN WIRE GAUGE	NFPA	NATIONAL FIRE PROTECTION ASSOC.
BC	BARE COPPER	N.I.C.	NOT IN CONTRACT
BFG	BELOW FINISH GRADE	NO	NORMALLY OPENED
C	CONDUIT	NTS	NOT TO SCALE
CAB	CABINET	OS & Y	OUTSIDE SCREW & YOKE
CATB	COMMUNITY ANTENNA TELEVISION	PB	PUSHBUTTON
CATV	CABLE TELEVISION	PF	POWER FACTOR
CKT	CIRCUIT	PFR	PHASE FAILURE RELAY
CLG	CEILING	PNL	PANEL
CNTR	CONTRACTOR	PT	POTENTIAL TRANSFORMER
C.O.	CONDUIT ONLY	PVC	POLYVINYL CHLORIDE CONDUIT
CRT	COMPUTER TERMINAL	(R)	RELOCATE
CT	CURRENT TRANSFORMER	RECEP	RECEPTACLE
CU	COPPER	REQ	REQUIREMENT
C/W	COMPLETE WITH	RLA	RATED LOAD AMPS
DB	DECIBEL	RMP	ROCKY MOUNTAIN POWER
DC	DIRECT CURRENT	RMS	ROOT MEAN SQUARE
DWG	DRAWING	SE	SERVICE ENTRANCE
(E)	EXISTING	SPEC	SPECIFICATIONS
EC	EMPTY CONDUIT	SPKR	SPEAKER
EG	EMERGENCY GENERATOR	SS	SELECTOR SWITCH
EMT	ELECTRICAL METALLIC TUBING	SW	SWITCH
EX	EXPLOSION PROOF	SWBD	SWITCHBOARD
FACP	FIRE ALARM CONTROL PANEL	SWGR	SWITCHGEAR
FC	FOOT CANDLE	TTB	TELEPHONE TERMINAL BOARD
FT	FOOT	TTC	TELEPHONE TERMINAL CABINET
GFI	GROUND FAULT INTERRUPTER	TV	TELEVISION
GND	GROUND	TYP	TYPICAL
GRC	GALVANIZED RIGID CONDUIT	UG	UNDERGROUND
HP	HORSE POWER	UPS	UNINTERRUPTED POWER SUPPLY
HZ	HERTZ	V	VOLT (KV-KILOVOLT)
IFC	INTERNATIONAL FIRE CODE	VA/R	VOLT-AMPS/REACTIVE
IG	ISOLATED GROUND	VM	VOLT METER
IMC	INTERMEDIATE METALLIC CONDUIT	W	WATTS
IN	INCH	W/	WITH
J-BOX	JUNCTION BOX	WH	WATTHOUR METER
KV	KILOVOLT	W/O	WITHOUT
KVA	KILOVOLT AMPERES	WP	WEATHERPROOF
KVAR	KILOVARS	XFMR	TRANSFORMER
KW	KILOWATT	XFMR SW	TRANSFER SWITCH
LRA	LOCKED ROTOR AMPS	XP	EXPLOSION PROOF
LTG	LIGHTING	1P	SINGLE-PHASE
MNF	MANUFACTURER	2P	TWO-POLE
MAX	MAXIMUM	3P	THREE-POLE
MB	MAIN BUS	4P	FOUR-POLE
MCC	MOTOR CONTROL CENTER	∅	PHASE
MCM	1000 CIRCULAR MILLS		

GENERAL NOTES

1. CONSULT ARCHITECTURAL REFLECTED CEILING PLANS FOR EXACT LOCATION OF ALL LIGHTING FIXTURES.
2. VERIFY ALL EQUIPMENT DIMENSIONS AND LOCATIONS BEFORE BEGINNING ROUGH IN. CONSULT ALL APPLICABLE CONTRACT DRAWINGS AND SHOP DRAWINGS TO INSURE NEC CODE CLEARANCES REQUIRED AROUND ALL ELECTRICAL EQUIPMENT.
3. CONTRACTOR SHALL VERIFY ALL ELECTRICAL LOADS (VOLTAGE, PHASE, CONNECTION REQUIREMENTS, ETC) OF ALL EQUIPMENT FURNISHED UNDER ALL DIVISIONS, INCLUDING ALL EXISTING EQUIPMENT TO BE RE-USED. REVIEW ALL SHOP DRAWINGS AND EXISTING EQUIPMENT BEFORE BEGINNING ROUGH-IN.
4. SEE SECTION 265100 (16510) OF THE SPECIFICATION FOR REQUIRED COORDINATION MEETINGS WITH MECHANICAL AND CEILING CONTRACTORS.
5. SEE APPLICABLE SHOP DRAWINGS FOR ROUGH IN LOCATION OF ALL EQUIPMENT, WIRING DEVICES, ETC. WHERE APPLICABLE MOUNT ALL WIRING DEVICES ABOVE BACK SPLASH EXCEPT THOSE SERVING UNDER COUNTER EQUIPMENT.
6. SEE SPECIFICATION FOR ENERGY SAVING LAMP AND BALLAST REQUIREMENTS.
7. FINISHES OF ALL LIGHT FIXTURES SHALL BE AS SELECTED BY ARCHITECT.
8. THE ELECTRICAL CONTRACTOR SHALL NOTIFY AND COOPERATE WITH THE MECHANICAL CONTRACTOR SUCH THAT NO PIPING, DUCTS, OR EQUIPMENT FOREIGN TO THE OPERATION OF THE ELECTRICAL EQUIPMENT SHALL BE PERMITTED TO BE INSTALLED IN, ENTER OR PASS THRU ELECTRICAL ROOMS OR SPACES, OR ABOVE OR BELOW ELECTRICAL EQUIPMENT IN OTHER AREAS.
9. ELECTRICAL BOXES SHALL NOT BE LOCATED IN MASONRY COLUMNS IN BRICK WALLS OR IN GROUTED CELLS ADJACENT TO OPENINGS. COORDINATE LOCATION OF BOXES WITH MASONRY CONTRACTOR.
10. ALL PENETRATIONS OF FIRE RATED FLOORS, WALLS, AND CEILINGS SHALL BE SEALED WITH APPROVED MATERIAL TO MAINTAIN FIRE RATING OF SURFACE PENETRATED.
11. CONTRACTOR SHALL VERIFY FURNITURE LAYOUT PRIOR TO ANY FLOORBOX OR POKE-THRU INSTALLATION. COORDINATE EXACT LOCATION OF FLOOR BOX OR POKE-THRU WITH OWNER AND FURNITURE PROVIDER PRIOR TO ROUGH-IN.
12. CIRCUITS EXTENDING OVER 70' FOR 120 VOLT AND 115' FOR 277 VOLT 20 AMP CIRCUITS SHALL BE RUN WITH CONDUCTORS PER TABLE BELOW.

20 AMP MINIMUM BRANCH CIRCUIT CONDUCTOR SIZING		
MAXIMUM LENGTH	BRANCH CIRCUIT VOLTAGE	
CONDUCTOR LENGTH (FT)	120 VOLT	277 VOLT
<70	MIN. #12 AWG	MIN. #12 AWG
70 - 115	MIN. #10 AWG	MIN. #12 AWG
115 - 170	MIN. #8 AWG	MIN. #10 AWG
170 - 270	MIN. #6 AWG	MIN. #8 AWG
271 - 380	NOTE B	MIN. #8 AWG
>380	NOTE B	NOTE B

A. THESE ARE BASED ON MAXIMUM LENGTH OF CIRCUIT.

B. PERFORM VOLTAGE DROP CALCULATIONS AND PROVIDE CONDUCTOR SIZE TO KEEP BRANCH CIRCUIT VOLTAGE DROP LESS THAN 3% WITH A 15 AMP LOAD.

C. CONTRACTOR SHALL ENSURE THAT THE INSTALLATION OF EACH BRANCH CIRCUIT STAYS WITHIN 3% VOLTAGE DROP FOR A 15 AMP LOAD. IF NECESSARY, CONTRACTOR SHALL INCREASE WIRE AND CONDUIT SIZE TO MEET THE STANDARD AT NO ADDITIONAL COST TO OWNER.

SYMBOL SCHEDULE

NOTES:

1. SEE FIXTURE SCHEDULE FOR TYPE, MOUNTING AND WATTAGE.
2. HEIGHT MEASURED TO CENTER LINE OF THE BOX FROM THE FINISHED FLOOR.
3. REFER TO DRAWINGS FOR DIRECTIONAL ARROWS.
4. SUBSCRIPT INDICATES FIXTURES TO BE CONTROLLED.
5. NEMA TYPE 'ND' NON-FUSED UNLESS NOTED 'F' (FUSED). USE 'HD' 480 V.
6. HEIGHT MEASURED TO TOP OF THE BOX FROM FINISHED FLOOR.
7. PROVIDE H.O.A. AND S.S. PUSHBUTTONS AS REQUIRED.
8. DOUBLE ARROWS INDICATES A DOUBLE FACE UNIT.
9. DEVICES NOTED WITH AN 'A' INDICATE TO COORDINATE WITH MILLWORK SHOP DRAWINGS AND ELEVATIONS FOR HEIGHT.
10. SUBSCRIPT INDICATES NEMA CONFIGURATION.
11. SOLID BOX AROUND DEVICE INDICATES INSTALLED IN FLOOR. DASHED BOX AROUND DEVICE INDICATES INSTALLED IN CEILING.
12. COORDINATE WITH DOOR HARDWARE SUPPLIER.
13. FOR WATER COOLER LOCATION, SEE DIAGRAM R002. FOR ALL OTHER LOCATIONS, MOUNT AT +16" TO BOTTOM OF BOX FROM FINISHED FLOOR, OR AS NOTED.
14. ARROWS SHOWN ON DEVICE INDICATE SENSOR AIMING DIRECTION.
15. CAMERA NUMBERS ARE SHOWN INSIDE THE CAMERA SYMBOL. CAMERA TYPES ARE INDICATED IN TAG.
16. MOUNT ON TRACK OF OVERHEAD DOOR, 6" FROM TOP OF DOOR, UNLESS OVERHEAD DOOR IS A ROLL UP DOOR, THEN MOUNT PER MANUFACTURER'S INSTRUCTIONS.
17. INSTALL DEVICES PER MANUFACTURER'S INSTALLATION INSTRUCTIONS.
18. DASHED LINE INDICATES EQUIPMENT CLEARANCES. ARROW INDICATES FRONT OF RACK.
19. SPEAKER TO BE MOUNTED IN HORIZONTAL POSITION.
20. MOUNTING HEIGHT IS TO BOTTOM OF DISPLAY.

*TYPICAL SYMBOL SCHEDULE. SOME SYMBOLS MAY NOT BE USED ON THIS SET OF DRAWINGS.

STANDARD MOUNTING HEIGHT UNLESS OTHERWISE NOTED ON PLANS

GENERAL							
SYMBOL	DESCRIPTION	MOUNTING HEIGHT	NOTES	SYMBOL	DESCRIPTION	MOUNTING HEIGHT	NOTES
	ONE CIRCUIT, HOME RUN TO PANEL				EQUIPMENT PANEL, SEE DRAWINGS	+72"	6.
	2 CIRCUIT, HOME RUN TO PANEL				CABLE TRAY	AS NOTED	
	3 CIRCUIT, HOME RUN TO PANEL				GROUND BUS BAR	+18"	6.
	CONDUIT RUN CONCEALED IN WALL OR CEILING			X	LIGHT FIXTURE (LETTER DESIGNATES TYPE)		
	CONDUIT RUN CONCEALED IN FLOOR OR GROUND			X X	EQUIPMENT NUMBER		
	CONDUIT UP			X	ARCHITECTURAL ROOM NUMBER		
	CONDUIT DOWN			X	DEVICE / EQUIPMENT (TEXT DESIGNATES TYPE) SEE SCHEDULE		
	CONDUIT STUB LOCATION	CAP CONDUIT		X	DEVICE / EQUIPMENT (TEXT DESIGNATES TYPE) SEE SCHEDULE / LEGEND		
	CONDUIT / CIRCUIT CONTINUATION						
MULTIPLE SYSTEM SYMBOLS							
R	RECEPTACLE SWITCH PACK	ABOVE CEILING		J F	JUNCTION BOX ("F" IN FLOOR)	AS NOTED	
	DUPLEX RECEPTACLE UPPER OUTLET SWITCH CONTROLLED	+18" OR AS NOTED	2. 9.		MOTOR OUTLET	TO SUIT EQUIP.	2.
	SIMPLEX RECEPTACLE	+18" OR AS NOTED	2. 9.		PUSHBUTTON	+46"	2.
	DUPLEX RECEPTACLE	+18" OR AS NOTED	2. 9. 11.		NON-FUSED DISCONNECT SWITCH	+60"	5. 6.
A	DUPLEX RECEPTACLE		9.	F	FUSED DISCONNECT SWITCH	+60"	5. 6.
G	5mA GFCI CIRCUIT BREAKER PROTECTED RECEPTACLE		13.	B	BREAKER DISCONNECT SWITCH	+60"	5. 6.
WP	WEATHERPROOF RECEPTACLE	+24" OR AS NOTED	2. 9.	S	SINGLE POLE SWITCH	+46"	2. 4.
	GROUND FAULT INTERRUPTER DUPLEX RECEPTACLE	+18" OR AS NOTED	2. 9.	S T	MANUAL STARTER THERMAL OVERLOAD SWITCH WITH PILOT LIGHT	+46"	2.
	DUPLEX RECEPTACLE EMERGENCY POWER (RED)	+18" OR AS NOTED	2. 9. 11.		MAGNETIC STARTER	+60"	6. 7.
	FOURPLEX RECEPTACLE	+18" OR AS NOTED	2. 9. 11.		MAGNETIC STARTER / DISCONNECT COMBINATION	+60"	6. 7.
	GROUND FAULT INTERRUPTER FOURPLEX RECEPT	+18" OR AS NOTED	2. 9.	VFD	VARIABLE FREQUENCY DRIVE	+66"	6.
LIGHTING							
	CEILING LIGHT FIXTURE	CEILING	1.	PP	POWER PACK	ABOVE CEILING	SEE DIAGRAM, SPEC.
	WALL LIGHT FIXTURE	AS NOTED	1.	RC X	DIGITAL ROOM CONTROLLER (SUBSCRIPT INDICATES NUMBER OF RELAYS)	ABOVE CEILING	SEE DIAGRAM, SPEC.
	RECESSED DOWNLIGHT FIXTURE	CEILING	1.	EP	EMERGENCY LIGHTING CONTROL UNIT	ABOVE CEILING	SEE DIAGRAM, SPEC.
	RECESSED WALL-WASH DOWNLIGHT FIXTURE	CEILING	1.	S 3	THREE-WAY SWITCH	+46"	2. 4.
	LIGHT FIXTURE	AS NOTED	1.	S 4	FOUR-WAY SWITCH	+46"	2. 4.
	EGRESS LIGHT FIXTURE	AS NOTED	1.	S K	KEY OPERATED SWITCH	+46"	2. 4.
	AREA LIGHT POLE AND FIXTURE	CONCRETE BASE	1. SEE DIAGRAM	S P	SWITCH WITH PILOT LIGHT	+46"	2. 4.
	BOLLARD	CONCRETE BASE	1.	S D	VARIABLE INTENSITY SWITCH	+46"	2. 4.
	STEP LIGHT FIXTURE	AS NOTED	1.	S TM	TIMER SWITCH	+46"	2. 4.
	IN-GRADE LIGHT FIXTURE	CONCRETE BASE	1.	S	MOMENTARY CONTACT SWITCH	+46"	2. 4.
	FLOOD OR TRACK FIXTURE	AS NOTED	1.	X	LOW VOLTAGE WALLSTATION (SUBSCRIPT INDICATES CONFIGURATION & CONTROL SEQUENCE)	+46"	2. SEE DIAGRAM, SPEC.
	CEILING / WALL MOUNTED EXIT LIGHT	CEILING/ AS NOTED	1. 3. 8.		DUAL TECH. CEILING MOUNTED OCCUPANCY SENSOR (PROVIDE WITH ALL PP AND ROOM CONTROLLERS)	CEILING	SEE DIAGRAM, SPEC.
	EMERGENCY LIGHT FIXTURE	AS NOTED	1.		DUAL TECH. WALL MOUNTED OCCUPANCY SENSOR (SUBSCIPT D = DIMMING AND DAYLIGHT CONTROL)	+46"	2. 4. SEE DIAGRAM, SPEC.
	COMBO EXIT / EMERGENCY LIGHT FIXTURE	AS NOTED	1.	P	PHOTO-ELECTRIC CONTROL (LOCATE ON ROOF, FACE NORTH)	AS NOTED	MOUNT AS PER MFR.
TC	TIME CLOCK	+60"	2.		DIGITAL DAYLIGHT SENSOR	CEILING	SEE DIAGRAM, SPEC.
POWER							
IG	ISOLATED GROUND RECEPTACLE	+18" OR AS NOTED	2. 9.	J	PLUGMOLD	+46" OR AS NOTED	2. SEE SPEC.
T	TAMPER-PROOF RECEPTACLE	+18" OR AS NOTED	2. 9.	DP	FLAT PANEL DISPLAY WALL BOX TVSS RECEPT., DATA AND OTHER DEVICES, REFER TO DIAGRAMS	AS NOTED	SEE DIAGRAM, SPEC. 26 2726
U	DUPLEX RECEPTACLE WITH USB OUTLET	+18" OR AS NOTED	2. 9.	CP	CEILING PROJECTION SYSTEM CEILING BOX	ABOVE CEILING	SEE DIAGRAM, SPEC.
	CONTROLLED DUPLEX RECEPTACLE	+18" OR AS NOTED	2. 9.		DOORBELL CHIME	+90"	2.
	FOURPLEX RECEPTACLE EMERGENCY POWER (RED)	+18" OR AS NOTED	2. 9. 11.	FB	FLOOR BOX - SEE SCHEDULE	FLOOR	SEE DIAGRAM, SPEC.
	CONTROLLED FOURPLEX RECEPTACLE	+18" OR AS NOTED	2. 9.	PT	POKE THRU - SEE SCHEDULE	FLOOR	SEE DIAGRAM, SPEC.
	TVSS PROTECTED RECEPTACLE	+18" OR AS NOTED	2. 9.		PANELBOARD	+72"	6.
	SPECIAL PURPOSE OUTLET	+18" OR AS NOTED	2. 10. W/ CAP.		MAIN DISTRIBUTION PANEL		
	CORD DROP		SEE DIAGRAM		TELEPHONE DEMARCATION BOARD		
	CORD REEL		SEE DIAGRAM	CLG	EQUIPMENT CEILING RACK	CEILING	
	TOMBSTONE RECEPTACLE				EQUIPMENT 4-POST RACK / CABINET	AS NOTED	18. SEE SPEC.
	POWER POLE				EQUIPMENT 2-POST RACK	AS NOTED	18. SEE SPEC.
				M	UTILITY METER / CT CABINET	+72"	6.

COLOR LEGEND					
	LIGHTING FIXTURES		POWER DEVICES		AUDIOVISUAL
	LIGHTING DEVICES		TELECOMMUNICATIONS		SECURITY
	POWER EQUIPMENT		FIRE ALARM		NURSECALL
	CABLE TRAY		CONDUIT		

SHEET INDEX

E001	ELECTRICAL SYMBOLS AND NOTES
E002	ELECTRICAL SCHEDULES
E003	ELECTRICAL SCHEDULE
E004	PANELBOARD SCHEDUEL
E005	SYSTEMS SCHEDULES
E060	ELECTRICAL DIAGRAMS
E061	ELECTRICAL DIAGRAMS
E062	ELECTRICAL DIAGRAMS
E063	SYSTEMS DIAGRAMS
E080	ONE-LINE DIAGRAM
E101	OVERALLL LIGHTING SITE PLAN
E101.ALT	OVERALL LIGHTING SITE PLAN
E102	OVERALL ELECTRICAL SITE PLAN
E103	OVERALL SYSTEMS SITE PLAN
E151	RESTROOM/ PAVILION LIGHTING PLAN
E152	RESTROOM/ PAVILION POWER PLAN
E153	RESTROOM/ PAVILION SYSTEM PLAN
E154	ENLARGED ELECTRICAL SITE PLANS

blu line designs
planning | landscape architecture | design
8719 S. Sandy Parkway
Sandy, UT 84070
p 801.679.3157

CLIENT

FARMINGTON CITY
CONTACT: SYLVIA CLARK
PH: 801.939.9295
EMAIL: SCLARK@FARMINGTON.UTAH.GOV

FARMINGTON

BNA CONSULTING
4225 Lake Park Blvd, Suite 275
West Valley City, UT 84120
P: 801.532.2196
F: 801.532.2305
www.bnaconsulting.com
SALT LAKE ST. GEORGE

IVY ACRES PARK

1397 WEST COOK LANE
FARMINGTON, UTAH

REVISIONS

NO.	symmdy	DESCRIPTION

Stamp

PROFESSIONAL ENGINEER
BRIAN HICKS
No. 7706078
STATE OF UTAH

Designed By:	AS
Drawn By:	AS
Date:	02.23.2024
Checked By:	RB
Project No:	22-246

Drawing Title

ELECTRICAL SYMBOLS AND NOTES

Drawing number

E001

100 PERCENT SET

RELAY PANEL SCHEDULE 'RP1'

CABINET SIZE (# OF RELAYS): **SPARE RELAYS:**

MOUNTING: **VOLTAGE:** **CONTROL CIRCUIT:** **AIC RATING:**

RELAY	POWER	EMERGENCY	SPACE	CONTROL	DIMMING	PROGRAMMING
RP1-1	L1-9	No	PAVILION EXT.	TOD	0-10V	D
RP1-2	L1-9	No	PAVILION VEST.	TOD	0-10V	D
RP1-3	HL1-15	No	SITE	TOD/LWS	0-10V	B
RP1-4	L1-11	No	SITE	TOD/LWS	0-10V	B
RP1-5	L1-13	No	SITE	TOD	0-10V	D
RP1-6	L1-25	No	PAVILION EXT.	TOD	0-10V	B

CONTROL LEGEND

PC	EXTERIOR PHOTOCELL
OC	OCCUPANCY/VACANCY SENSOR
DS	INTERIOR DAYLIGHT SENSOR
MS	EXTERIOR MOTION SENSOR
TC	ANALOG ASTRONOMICAL TIMECLOCK
TOD	TIME OF DAY - SOFTWARE BASED
LWS	LOCAL WALLSTATION

DIMMING LEGEND

N	NONE
0-10	0-10 VOLT DIMMING
DMX	DIGITAL MULTIPLEX (DMX) DIMMING
3WD	3-WIRE DIMMING
ELV	ELECTRONIC LOW VOLTAGE
MLV	MAGNETIC LOW VOLTAGE
DA	DALI DIMMING

PROGRAMMING

A	NIGHT LIGHT; ALWAYS ON.
B	MASTER CLOCK SCHEDULE (PROVIDED BY OWNER); PROVIDE 0-10V DIMMING.
C	EGRESS LIGHTING; MASTER CLOCK SCHEDULE (PROVIDED BY OWNER); 0-10V DIMMING.
D	MASTER CLOCK SCHEDULE (PROVIDED BY OWNER).
E	LOCAL WALLSTATION TO ACT AS OVERRIDE FOR AFTER HOURS CONTROL.

GENERAL NOTES

1.	PROGRAM SYSTEM TO MEET THE REQUIREMENTS OF IECC 2015 OR CURRENT ENERGY CODE.
2.	CONFIRM SWITCHING AND PROGRAMMING SCHEME WITH OWNER PRIOR TO PROGRAMMING.
3.	PROGRAM SYSTEM TO INCORPORATE AUTO DAYLIGHT SAVINGS ADJUSTMENTS, ASTRONOMICAL CLOCK WITH OFFSETS, HOLIDAY DATES, AND NETWORK OVERRIDE.
4.	REFER TO WALLSTATION DIAGRAMS FOR FACTORY ENGRAVED LABELING FOR ALL INDIVIDUAL PUSH-BUTTONS. DEVICE AND COVERPLATE COLORS SELECTED BY ARCHITECT.
5.	SUBMIT ALL WALLSTATION LAYOUTS, ENGRAVING AND CONTROL SEQUENCES DURING THE SHOP DRAWINGS REVIEW PROCESS.
6.	PROVIDE RELAY BARRIER FOR VOLTAGE AND POWER SOURCE SEPARATION (EMERGENCY AND NORMAL CIRCUITS, VOLTAGE DIFFERENCES).
7.	PROGRAM NORMAL AND EMERGENCY RELAYS IN RELATED CORRIDORS TO OPERATE TOGETHER.
8.	ALL RELAYS REQUIRING DIMMING AND/OR DAYLIGHT HARVESTING SHALL UTILIZE 0-10V DIMMING. PROVIDE 0-10V DIMMING WIRING AND CONTROLS AS REQUIRED.
9.	PROVIDE A MINIMUM OF (5) SPARE RELAYS.

GROUND BOX SCHEDULE

TYPE	DESCRIPTION	MFR.	CATALOG NUMBER
GB01	RECESSED IN-GRADE BOX, MULTI SERVICE IN-GRADE BOX, 2 NEMA 5-15R DUPLEX RECEPTACLES	WIREMOLD	XB814C545BK

LIGHT FIXTURE SCHEDULE

LIGHT FIXTURE ABBREVIATION SCHEDULE — PROJECT MANAGER: XX

A.F.F.	ABOVE FINISH FLOOR	SCBA	STANDARD PAINTED COLOR AS SELECTED BY THE ARCHITECT
WALL@CLG	WALL MOUNT AT CORNER OF WALL AND CEILING	CFBA	CUSTOM FINISH AS SELECTED BY THE ARCHITECT
CCBA	CUSTOM PAINTED COLOR AS SELECTED BY THE ARCHITECT	SFBA	STANDARD FINISH AS SELECTED BY THE ARCHITECT

LIGHT FIXTURE GENERAL NOTES

1. REFER TO ARCHITECTURAL REFLECTED CEILING PLANS FOR LOCATIONS OF LIGHT FIXTURES AND, CONFIRM CEILING TYPES WITH LIGHT FIXTURE TRIMS. BRING ALL DISCREPANCIES OF LOCATIONS AND QUANTITIES TO THE ATTENTION OF THE ARCHITECT AND ELECTRICAL ENGINEER PRIOR TO BIDDING.
2. REFER TO ARCHITECTURAL ELEVATIONS FOR MOUNTING HEIGHTS AND LOCATIONS OF LIGHT FIXTURES. BRING ALL DISCREPENCIES TO THE ATTENTION OF THE ARCHITECT PRIOR TO BIDDING.
3. REFER TO THE SPECIFICATIONS FOR OTHER LIGHT FIXTURE, FUSING, LED DRIVERS, AND LAMP REQUIREMENTS AND ACCEPTABLE MANUFACTURERS.
4. CONFIRM AVAILABLE MOUNTING DEPTHS OF ALL LIGHT FIXTURES AND COMPARE WITH DEPTHS SHOWN ON SHOP DRAWINGS. BRING ALL POTENTIAL CONFLICT AREAS TO THE ATTENTION OF THE ARCHITECT AND ELECTRICAL ENGINEER PRIOR TO RELEASE.
5. REFER TO LIGHTING PLANS FOR ALL LINEAR FIXTURE LENGTHS. THE CATALOG NUMBER IS BASED ON THE FIXTURE SPECIFIED AND MAY NOT REFLECT THE QUANTITY OR OVERALL LENGTH OF LINEAR FIXTURES REQUIRED. CONTRACTOR TO NOTE THAT VARIOUS FIXTURE LENGTHS MAY BE REQUIRED TO ACHIEVE THE OVERALL RUN LENGTH.
6. REFER TO LIGHTING PLANS FOR ALL UNDERCABINET FIXTURE LENGTHS. THE CATALOG NUMBER IS BASED ON THE FIXTURE SPECIFIED AND MAY NOT REFLECT THE QUANTITY OR OVERALL LENGTH OF THE UNDERCABINET FIXTURES REQUIRED. CONTRACTOR TO NOTE THAT VARIOUS FIXTURE LENGTHS MAY BE REQUIRED TO ACHIEVE THE OVERALL RUN LENGTH OR TO FIT WITHIN THE MILLWORK. COORDINATE FIXTURE LAYOUT WITH MILLWORK SHOP DRAWINGS PRIOR TO LIGHTING SUBMITTALS.
7. WHEN A CONTRADICTION EXISTS BETWEEN A SPECIFIC MODEL NUMBER AND THE DESCRIPTION, NOTIFY THE ELECTRICAL ENGINEER AND/OR LIGHTING DESIGNER.
8. PRIOR APPROVALS ARE REQUIRED BEFORE BIDDING THE PROJECT AND SHALL BE SUBMITTED TO THE ELECTRICAL ENGINEER'S OFFICE AT LEAST (8) EIGHT WORKING DAYS BEFORE THE BID. PRIOR APPROVALS RECEIVED AFTER THIS TIME PERIOD SHALL BE...
9. REFER TO SPECIFICATIONS 20 0500, 26 5100 & 26 5600 (16001, 16510 & 16551).
10. VALUE ENGINEERING CONDUCTED WITHOUT THE DESIGN TEAM IE; ARCHITECT, ENGINEER & LIGHTING CONSULTANT/DESIGNER WILL NOT BE ALLOWED, REVIEWED OR APPROVED.

TYPE	DESCRIPTION	MFR.	CATALOG #	VOLTS	TOTAL WATTS	LAMP TYPE	DELIVERED LUMENS	COLOR TEMP	CRI
BA1	BASKETBALL COURT LIGHTING; 50FT POLE; (3) LED HEADS EACH W/VISOR; OF BY OWNER; INCLUDE PUSHBUTTON AND STROBE TLC-LED-550 (540W/67,000LMS EA); ELECTRICAL CONTRACTOR TO PROVIDE ALL INSTALLATION, WIRING, TRENCHING, ETC. FOR A COMPLETE SYSTEM MUSCO LIGHTING TO PROVIDE ALL FIXTURES, POLES, PRE-CAST CONCRETE BASES, CONTROL CABINET, STROBES, SWITCH, POLE FOR STROBE, ETC.. CONTACT AARON KING/MUSCO LIGHTING, #435-659-9530 FOR FURTHER INFORMATION AND COORDINATION.	MUSCO	TLC-LED-550(540W/67,000 LMS EA) 50' TALL GALVINIZED STEEL POLES	277 V	1620 VA	LED	210,000	5700 K	+75
C4	5"X4' SURFACE MTD VANDAL PROOF; ROUNDED; PEARL POLY LENS; 0-10V DIM; ROUNDED ENDCAPS; MATT WHITE	KENALL	MLHA5-48-R-MW-PP-1-45L40K-DCC-1-DV	120 V	45 VA	LED	5,062	4000 K	80
C4E	5"X4' SURFACE MTD VANDAL PROOF; ROUNDED; PEARL POLY LENS; 0-10V DIM; ROUNDED ENDCAPS; MATT WHITE; 500 LM EM BATTERY	KENALL	MLHA5-48-R-MW-PP-1-45L40K-DCC-1-DV-PEL	120 V	45 VA	LED	5,062	4000 K	80
CS1	CITY STREET LIGHTING; 14 FOOT TALL SINGLE POST TOP; IP66 RATED HOUSING; 0-10V DIMMING DRIVERS; 5 YEAR WARRANTY. 25 IN DIAMETER POLE MOUNT; PHOTOCONTROL RECEPTACLE, COMPATIBLE WITH NEMA 7-PIN STANDARDS.	COOPER	(FIXTURE) ARB-B3-LED-D1-T2-SCBA (POLE) RTAP15-5-11-F-2-BC	<varies>	96 VA	LED	7,362	4000 K	70
D4	4" DOWN LIGHT; STANDARD 0-10V DRIVER DIMS TO 1%; CONICAL REFLECTOR	COOPER	HC4-07-D010-HM4-0525-840-41-MD-H-WF	120 V	8 VA	LED	1,500	4000 K	80
D4E	4" DOWN LIGHT; STANDARD 0-10V DRIVER DIMS TO 1%; CONICAL REFLECTOR; 14 WATT EMERGENCY BATTERY PACK	COOPER	HC4-07-D010-HM4-0525-840-41-MD-H-WF	120 V	8 VA	LED	1,500	4000 K	80
L1	8' LED LINEAR SURFACE MOUNT LUMINAIRE; EXTRUDED AND DIE-CAST; ANTI BREAKAGE; ROUNDED END CAP; 0-10V DIMMING; 10 YEAR WARRANTY; PEACE OF MIND WARENTE AGAINST BREAKAGE.	KENALL	MLHA3-96-R-MW-FA-800LF-35K8-DIM1-DV-CDF	120 V	48 VA	LED	6,304	3500 K	80
O1	18' SINGLE POST TOP; IP66 RATED HOUSING; STANDARD 0-10V DIMMING; PHOTO CONTROLLED; PROPRIETARY SURGE PROTECTION UP TO 10kV; FINISH TO WITHSTAND EXTENDED OUTDOOR EXPOSURE; 8" POLE MOUNT POST TOP ADAPTER	COOPER	(FIXTURE) ARB-B3-LED-D1-T5-SCBA (POLE) RTAP18-5-7-F-2-BC	277 V	96 VA	LED	8,511	4000 K	70
O2	18' SINGLE POST TOP; IP66 RATED HOUSING; STANDARD 0-10V DIMMING; PHOTO CONTROLLED; PROPRIETARY SURGE PROTECTION UP TO 10kV; FINISH TO WITHSTAND EXTENDED OUTDOOR EXPOSURE; 8" POLE MOUNT POST TOP ADAPTER	COOPER	(FIXTURE) ARB-B3-LED-D1-T4-SCBA (POLE) RTAP18-5-7-F-2-BC	277 V	96 VA	LED	8,740	4000 K	70
O3	10' SINGLE POST TOP; IP66 RATED HOUSING; STANDARD 0-10V DIMMING; PHOTO CONTROLLED; PROPRIETARY SURGE PROTECTION UP TO 10kV; FINISH TO WITHSTAND EXTENDED OUTDOOR EXPOSURE; 8" POLE MOUNT POST TOP ADAPTER	COOPER	(FIXTURE) ARB-B3-LED-D1-T5-SCBA-PC (POLE) RTAP10-4-11-F-2-BC	277 V	100 VA	LED	8,511	4000 K	70
OA	SUSPENDED DECORATIVE FESTOON STRING LIGHTS; 2 FOOT SPACED AND TAUT ON AIR CRAFT CABLE; DIMMABLE TO 10%; BUG RATED; WET INSTALLATION. 325 LUMENS/2FT; 3.5WATTS/2FT.	PRIMUS LIGHTING	DSW-24-120-G16.5-DSQ8-F-TBK-XXX	120 V	4 VA	LED	325	3200 K	
OB1	42" ROUND BALLARD; VANDAL RESISTANCE; CORROSION RESISTANT; WAVESTREAM LED OPTICAL; 0-10V DIMMING DRIVER; DUST AND WATER RESISTANT; OCCUPANCY SENSOR	COOPER	ABB-B2-8030-LED-42-D1-S-SCBA-MS/DIM-H8-ABAnchor	277 V	32 VA	LED	1,276	3000 K	80
OC	DOUBLE PAGODA ACCENT LIGHTING; DIRECTIONALLY ADJUSTABLE; DIMMING CONTROLS; IP65 RATED	LUMASCAPE	LS321-2LED-12H6-WD-LSLED-15V20W277-CB	277 V	20 VA	LED	1,500	3000 K	80
OC1	18" LED WHITE ACRYLIC DIFFUSER CUBE; WIND RATED FOR 140MPH 3 SECOND BURSTS; DMX INTEGRAL POWER SUPPLY; CUBE COUNT(16)	CAMMAN LIGHTING	C19865-18	277 V	60 VA	LED	0	0 K	0
OC2	24" LED WHITE ACRYLIC DIFFUSER CUBE; WIND RATED FOR 140MPH 3 SECOND BURSTS; DMX INTEGRAL POWER SUPPLY; CUBE COUNT(14)	CAMMAN LIGHTING	C19865-24	277 V	80 VA	LED	0	0 K	0
OC3	30" LED WHITE ACRYLIC DIFFUSER CUBE; WIND RATED FOR 140MPH 3 SECOND BURSTS; DMX INTEGRAL POWER SUPPLY; CUBE COUNT(9)	CAMMAN LIGHTING	C19865-30	277 V	100 VA	LED	0	0 K	0
OD	4.5" ROUND EXTERIOR/WET RATED DOWNLIGHT;REGRESSED LENS; WIDE DISTRIBUTION; SEMI-SPECREFLECTOR;	H.E.W	V4DR-L10-8-40-DIM-UNV-R-W-OF-CS-WET/CC-N	120 V	16 VA	LED	972	4000 K	80
OF	5"X4' VANDAL RESISTANT LED; EXTERIOR/WET LISTED; MOUNTS TO PAVILION STRUCTURE; UV STABILE OPAL POLY WRAP LENS; SCBA	LUMINAIRE LED	VPF4-4FT-MIN10-40W-40K-MVOLT-OP-SCBA-WL	120 V	25 VA	LED	4,272	4000 K	80
OW2	EXTERIOR WALL PACK; ENERGY EFFICIENT; FULL CUT-OFF SOLUTION; IP66 RATED;PHOTOCELL	LITHONIA LIGHTING	WPX1-30K-MVOLT-E14WC-PE-DDBXD	120 V	11 VA	LED	1,537	3000 K	70
P1	PICKLEBALL COURT LIGHTING; 50FT POLE; (3) LED HEADS EACH W/VISOR;TLC-LED-550(540W/67,000 LMS EA) COLOR OF FIXTURE/POLE BY OWNER; ELECTRICAL CONTRACTOR TO PROVIDE ALL INSTALLATION, WIRING, TRENCHING, ETC. FOR A COMPLETE SYSTEM MUSCO LIGHTING TO PROVIDE ALL FIXTURES, POLES, PRE-CAST CONCRETE BASES, CONTROL CABINET, STROBES, SWITCH, POLE FOR STROBE, ETC.. CONTACT AARON KING/MUSCO LIGHTING, #435-659-9530 FOR FURTHER INFORMATION AND COORDINATION.	MUSCO	TLC-LED-550(540W/67,000 LMS EA) 50' TALL GALVINIZED STEEL POLES	277 V	1620 VA	LED	201,000	5700 K	+75
P2	PICKLEBALL COURT LIGHTING; 50FT POLE; (3) LED HEADS EACH W/VISOR; TLC-LED-550(540W/67,000 LMS EA) COLOR OF FIXTURE/POLE BY OWNER; ELECTRICAL CONTRACTOR TO PROVIDE ALL INSTALLATION, WIRING, TRENCHING, ETC. FOR A COMPLETE SYSTEM MUSCO LIGHTING TO PROVIDE ALL FIXTURES, POLES, PRE-CAST CONCRETE BASES, CONTROL CABINET, STROBES, SWITCH, POLE FOR STROBE, ETC.. CONTACT AARON KING/MUSCO LIGHTING, #435-659-9530 FOR FURTHER INFORMATION AND COORDINATION.	MUSCO	TLC-LED-550(540W/67,000 LMS EA) 50' TALL GALVINIZED STEEL POLES	277 V	3240 VA	LED	402,000	5700 K	+75
P3	PICKLEBALL COURT LIGHTING; 50FT POLE; (3) LED HEADS EACH W/VISOR;TLC-LED-550(540W/67,000 LMS EA) COLOR OF FIXTURE/POLE BY OWNER; ELECTRICAL CONTRACTOR TO PROVIDE ALL INSTALLATION, WIRING, TRENCHING, ETC. FOR A COMPLETE SYSTEM MUSCO LIGHTING TO PROVIDE ALL FIXTURES, POLES, PRE-CAST CONCRETE BASES, CONTROL CABINET, STROBES, SWITCH, POLE FOR STROBE, ETC.. CONTACT AARON KING/MUSCO LIGHTING, #435-659-9530 FOR FURTHER INFORMATION AND COORDINATION.	MUSCO	TLC-LED-550(540W/67,000 LMS EA) 50' TALL GALVINIZED STEEL POLES	277 V	1620 VA	LED	201,000	5700 K	+75
P4	PICKLEBALL COURT LIGHTING; 50FT POLE; (3) LED HEADS EACH W/VISOR;TLC-LED-550(540W/67,000 LMS EA) COLOR OF FIXTURE/POLE BY OWNER; ELECTRICAL CONTRACTOR TO PROVIDE ALL INSTALLATION, WIRING, TRENCHING, ETC. FOR A COMPLETE SYSTEM MUSCO LIGHTING TO PROVIDE ALL FIXTURES, POLES, PRE-CAST CONCRETE BASES, CONTROL CABINET, STROBES, SWITCH, POLE FOR STROBE, ETC.. CONTACT AARON KING/MUSCO LIGHTING, #435-659-9530 FOR FURTHER INFORMATION AND COORDINATION.	MUSCO	TLC-LED-550(540W/67,000 LMS EA) 50' TALL GALVINIZED STEEL POLES	277 V	1620 VA	LED	201,000	5700 K	+75
P5A	COURT LIGHTING; 50FT POLE; (9) LED HEADS EACH W/VISOR;TLC-LED-550(540W/67,000 LMS EA) UTILIZING A BACK-TO-BACK MOUNTING CONFIGURATION COLOR OF FIXTURE/POLE BY OWNER; ELECTRICAL CONTRACTOR TO PROVIDE ALL INSTALLATION, WIRING, TRENCHING, ETC. FOR A COMPLETE SYSTEM MUSCO LIGHTING TO PROVIDE ALL FIXTURES, POLES, PRE-CAST CONCRETE BASES, CONTROL CABINET, STROBES, SWITCH, POLE FOR STROBE, ETC.. CONTACT AARON KING/MUSCO LIGHTING, #435-659-9530 FOR FURTHER INFORMATION AND COORDINATION.	MUSCO	TLC-LED-550(540W/67,000 LMS EA) 50' TALL GALVINIZED STEEL POLES	277 V	3240 VA	LED	155,200	5700 K	+75
P5B	COURT LIGHTING; 50FT POLE; (9) LED HEADS EACH W/VISOR;TLC-LED-550(540W/67,000 LMS EA) UTILIZING A BACK-TO-BACK MOUNTING CONFIGURATION COLOR OF FIXTURE/POLE BY OWNER; ELECTRICAL CONTRACTOR TO PROVIDE ALL INSTALLATION, WIRING, TRENCHING, ETC. FOR A COMPLETE SYSTEM MUSCO LIGHTING TO PROVIDE ALL FIXTURES, POLES, PRE-CAST CONCRETE BASES, CONTROL CABINET, STROBES, SWITCH, POLE FOR STROBE, ETC.. CONTACT AARON KING/MUSCO LIGHTING, #435-659-9530 FOR FURTHER INFORMATION AND COORDINATION.	MUSCO	TLC-LED-550(540W/67,000 LMS EA) 50' TALL GALVINIZED STEEL POLES	277 V	1620 VA	LED	155,200	5700 K	+75
P6	PICKLEBALL COURT LIGHTING; 50FT POLE; (3) LED HEADS EACH W/VISOR; TLC-LED-550(540W/67,000 LMS EA) COLOR OF FIXTURE/POLE BY OWNER; ELECTRICAL CONTRACTOR TO PROVIDE ALL INSTALLATION, WIRING, TRENCHING, ETC. FOR A COMPLETE SYSTEM MUSCO LIGHTING TO PROVIDE ALL FIXTURES, POLES, PRE-CAST CONCRETE BASES, CONTROL CABINET, STROBES, SWITCH, POLE FOR STROBE, ETC.. CONTACT AARON KING/MUSCO LIGHTING, #435-659-9530 FOR FURTHER INFORMATION AND COORDINATION.	MUSCO	TLC-LED-550(540W/67,000 LMS EA) 50' TALL GALVINIZED STEEL POLES	277 V	1620 VA	LED	201,000	5700 K	+75
S4	LINEAR LED STRIP LIGHT W/CURVED FROSTED LENS; SURFACE OR CHAIN MOUNTED; 0-10V DIM TO 10%	METALUX	4-SNLED-LDS-41SL-LW-UNV-EL14W-L840-CD-1-BLANK-U-AYC-CHAIN/SET	120 V	31 VA	LED	4,000	4000 K	80
SP4	4' LED VAPORTIGHT/NON-COOROSIVE SURFACE MOUNTED LED; CLEAR ACRYLIC LENS; PLASTIC LATCHES; TOP OR END CONDUIT HUBS AVAILABLE; SURFACE OR SUSPENDED; COORDINATE MOUNTING WITH EQUIPMENT IN ROOM - ORDER APPROPRIATE STAINLESS STEEL ACCESSORIES AS REQUIRED	DAY-BRITE	V3W-4-51L-840-UNV-DIM	120 V	35 VA	LED	5,025	4000 K	80
SP4E	4' LED VAPORTIGHT/NON-COOROSIVE SURFACE MOUNTED LED; CLEAR ACRYLIC LENS; PLASTIC LATCHES; TOP OR END CONDUIT HUBS AVAILABLE; SURFACE OR SUSPENDED; COORDINATE MOUNTING WITH EQUIPMENT IN ROOM - ORDER APPROPRIATE STAINLESS STEEL ACCESSORIES AS REQUIRED; EM BATTERY	DAY-BRITE	V3W-4-51L-840-UNV-DIM-BSL10LST	120 V	35 VA	LED	5,025	4000 K	80

100 PERCENT SET

blu line designs
planning | landscape architecture | design
8719 S. Sandy Parkway
Sandy, UT 84070
p 801.679.3157

CLIENT

FARMINGTON CITY
CONTACT: SYLVIA CLARK
PH: 801.939.9295
EMAIL: SCLARK@FARMINGTON.UTAH.GOV

FARMINGTON

BNA CONSULTING
4225 Lake Park Blvd, Suite 275
West Valley City, UT 84120
P: 801.532.2196
F: 801.532.2305
www.bnaconsulting.com
SALT LAKE ST. GEORGE

IVY ACRES PARK

1397 WEST COOK LANE
FARMINGTON, UTAH

REVISIONS

NO.	APPROVAL	DESCRIPTION

Stamp

PROFESSIONAL ENGINEER — BRIAN HICKS — No. 7709038 — STATE OF UTAH

Designed By:	AS
Drawn By:	AS
Date:	02.23.2024
Checked By:	RB
Project No:	22-246

Drawing Title

ELECTRICAL SCHEDULES

Drawing number

E002

WATER FEATURE EQUIPMENT SCHEDULE

CONNECTION TYPE NOTES:

1. NON-FUSED DISCONNECT SWITCH
2. FUSED DISCONNECT SWITCH
3. BREAKER IN ENCLOSURE
4. MANUAL STARTER WITH THERMAL OVERLOAD
5. MAGNETIC STARTER
6. MAGNETIC STARTER/NON-FUSED DISCONNECT COMBINATION
7. MAGNETIC STARTER/FUSED DISCONNECT COMBINATION
8. MAGNETIC STARTER/BREAKER COMBINATION
9. VARIABLE FREQUENCY DRIVE
10. REDUCED VOLTAGE STARTER
11. DIRECT CONNECTION
12. RECEPTACLE/SPECIAL PURPOSE OUTLET/ETC.
13. TWO-SPEED STARTER. COORDINATE WITH MOTOR TYPE
14. SOLID STATE SOFT-STARTER

RESPONSIBILITY LEGEND:

A. FURNISHED, INSTALLED AND CONNECTED UNDER DIVISION 26(16)
B. FURNISHED AND INSTALLED UNDER ANOTHER DIVISION. REQUIRED CONNECTION UNDER DIVISION 26(16)
C. FURNISHED UNDER ANOTHER DIVISION BUT INSTALLED AND CONNECTED UNDER DIVISION 26(16)
D. FURNISHED, INSTALLED AND CONNECTED UNDER ANOTHER DIVISION

CB = CIRCUIT BREAKER

NOTE 1: PER 250.122(A), EQUIPMENT GROUND IS NOT REQUIRED TO BE LARGER THAN THE PHASE CONDUCTOR
NOTE 2: OVERCURRENT PROTECTION DEVICE (OCPD) SHOWN IS LOCATED AT POWER PANEL. ALL FUSING TO BE SIZED IN ACCORDANCE WITH FUSE MFR RECOMMENDATION FOR MOTOR NAME PLATE RATING.
NOTE 3: ALL EQUIPMENT TO BE RATED FOR THE ENVIRONMENT FOR WHICH IT IS INSTALLED.

UNIT	#	DESCRIPTION	ELECTRICAL EQUIPMENT INFORMATION								WIRE					OCPD			REMARKS
			LOAD																
			HP	FLA	MCA	VA	VOLTAGE	PHASE	FULL LOAD AMPS	CONDUIT SIZE	SETS	QTY	SIZE	EQ. GROUND	TYPE	AMPS	STARTER/ DISC/ VFD OTHER (SEE NOTES)	
WF	1B	VFD FOR 1A	10.00	0 A	0 A	0.000 VA	208 V	3	31 A	3/4"	1	3	8	10	CB	50 A	9 C	
WF	2C	VFD FOR 2A	15.00	0 A	0 A	0.000 VA	208 V	3	46 A	1"	1	3	4	8	CB	70 A	9 C	
WF	3A	TREE FEATURE PUMP	5.00	0 A	0 A	0.000 VA	208 V	3	17 A	3/4"	1	3	10	10	CB	30 A	9 B	INTEGRAL VFD
WF	4C	VFD FOR 4A	20.00	0 A	0 A	0.000 VA	208 V	3	59 A	1"	1	3	3	8	CB	90 A	9 C	
WF	5A	EAST FEATURES PUMP	5.00	0 A	0 A	0.000 VA	208 V	3	17 A	3/4"	1	3	10	10	CB	30 A	9 B	INTEGRAL VFD
WF	7A	CHEMICAL SYSTEM INTERLOCK	0.00	0 A	0 A	500.000 VA	115 V	1	4 A	3/4"	1	2	12	12	CB	15 A	11 A	
WF	8A	CHEMICAL CONTROLLER	0.00	1 A	0 A	0.000 VA	115 V	1	1 A	3/4"	1	2	12	12	CB	15 A	12 A	
WF	8B	CHEMICAL SYSTEM INTERLOCK	0.00	12.3 A	0 A	0.000 VA	115 V	1	12 A	3/4"	1	2	12	12	CB	20 A	11 A	
WF	9	LIQUID CHLORINE FEEDER	0.00	1.7 A	0 A	0.000 VA	115 V	1	2 A	3/4"	1	2	12	12	CB	15 A	12 A	
WF	10	ACID FEEDER	0.00	1.7 A	0 A	0.000 VA	115 V	1	2 A	3/4"	1	2	12	12	CB	15 A	12 A	
WF	13B	UV SYSTEM CONTROL PANEL	0.00	0 A	0 A	4500.000 VA	208 V	1	22 A	3/4"	1	2	10	10	CB	30 A	11 A	
WF	29B	ELECTRIC CHAIN HOIST	1.00	0 A	0 A	0.000 VA	480 V	3	2 A	3/4"	1	3	12	12	CB	15 A	2 A	
WP	7B	CHEMICAL SYSTEM INTERLOCK	0.00	0 A	0 A	500.000 VA	115 V	1	4 A	3/4"	1	2	12	12	CB	15 A	11 A	

EQUIPMENT SCHEDULE

CONNECTION TYPE NOTES:

1. NON-FUSED DISCONNECT SWITCH
2. FUSED DISCONNECT SWITCH
3. BREAKER IN ENCLOSURE
4. MANUAL STARTER WITH THERMAL OVERLOAD
5. MAGNETIC STARTER
6. MAGNETIC STARTER/NON-FUSED DISCONNECT COMBINATION
7. MAGNETIC STARTER/FUSED DISCONNECT COMBINATION
8. MAGNETIC STARTER/BREAKER COMBINATION
9. VARIABLE FREQUENCY DRIVE
10. REDUCED VOLTAGE STARTER
11. DIRECT CONNECTION
12. RECEPTACLE/SPECIAL PURPOSE OUTLET/ETC.
13. TWO-SPEED STARTER. COORDINATE WITH MOTOR TYPE
14. SOLID STATE SOFT-STARTER

RESPONSIBILITY LEGEND:

A. FURNISHED, INSTALLED AND CONNECTED UNDER DIVISION 26(16)
B. FURNISHED AND INSTALLED UNDER ANOTHER DIVISION. REQUIRED CONNECTION UNDER DIVISION 26(16)
C. FURNISHED UNDER ANOTHER DIVISION BUT INSTALLED AND CONNECTED UNDER DIVISION 26(16)
D. FURNISHED, INSTALLED AND CONNECTED UNDER ANOTHER DIVISION

CB = CIRCUIT BREAKER

NOTE 1: PER 250.122(A), EQUIPMENT GROUND IS NOT REQUIRED TO BE LARGER THAN THE PHASE CONDUCTOR
NOTE 2: OVERCURRENT PROTECTION DEVICE (OCPD) SHOWN IS LOCATED AT POWER PANEL. ALL FUSING TO BE SIZED IN ACCORDANCE WITH FUSE MFR RECOMMENDATION FOR MOTOR NAME PLATE RATING.
NOTE 3: ALL EQUIPMENT TO BE RATED FOR THE ENVIRONMENT FOR WHICH IT IS INSTALLED.

UNIT	#	DESCRIPTION	ELECTRICAL EQUIPMENT INFORMATION								WIRE					OCPD			REMARKS
			LOAD																
			HP	FLA	MCA	VA	VOLTAGE	PHASE	FULL LOAD AMPS	CONDUIT SIZE	SETS	QTY	SIZE	EQ. GROUND	TYPE	AMPS	STARTER/ DISC/ VFD OTHER (SEE NOTES)	
DH	1	DUCT HEATER	0.00	0 A	35 A	0.000 VA	120 V	1	28 A	3/4"	1	2	8	10	CB	45 A	2 A	
EF	1A	EXHAUST FAN	0.25	0 A	0 A	0.000 VA	120 V	1	6 A	3/4"	1	2	12	12	CB	15 A	4 A	
EF	1B	EXHAUST FAN	0.25	0 A	0 A	0.000 VA	120 V	1	6 A	3/4"	1	2	12	12	CB	15 A	4 A	
EF	2A	EXHAUST FAN	0.25	0 A	0 A	0.000 VA	120 V	1	6 A	3/4"	1	2	12	12	CB	15 A	4 A	CONTROL WITH LIGHTS. PROVIDE TIMER
EF	2B	EXHAUST FAN	0.25	0 A	0 A	0.000 VA	120 V	1	6 A	3/4"	1	2	12	12	CB	15 A	4 A	CONTROL WITH LIGHTS. PROVIDE TIMER
EF	3A	EXHAUST FAN	0.25	0 A	0 A	0.000 VA	120 V	1	6 A	3/4"	1	2	12	12	CB	15 A	4 A	
EF	3B	EXHAUST FAN	0.25	0 A	0 A	0.000 VA	120 V	1	6 A	3/4"	1	2	12	12	CB	15 A	4 A	
ES	2	EMERGENCY SHOWER/EYE WASH	0.00	0 A	0 A	500.000 VA	120 V	1	4 A	3/4"	1	2	12	12	CB	15 A	11 A	
EWC	1	WATER COOLER WITH BOTTLER FILLING STATION	0.00	1 A	0 A	0.000 VA	120 V	1	1 A	3/4"	1	2	12	12	CB	15 A	12 A	
EWC	1	WATER COOLER WITH BOTTLER FILLING STATION	0.00	1 A	0 A	0.000 VA	120 V	1	1 A	3/4"	1	2	12	12	CB	15 A	12 A	
IDU	1	INDOOR DUCTLESS UNIT	0.00	1 A	0 A	0.000 VA	208 V	1	1 A	3/4"	1	2	12	12	CB	15 A	2 A	FED FROM ODU-1
ODU	1	OUTDOOR DUCTLESS UNIT	0.00	0 A	12 A	0.000 VA	208 V	1	10 A	3/4"	1	2	12	12	CB	15 A	2 A	
RCP	1	RECIRC PUMP	0.00	0 A	0 A	1.000 VA	120 V	1	0 A	3/4"	1	2	12	12	CB	15 A	4 A	
SF	1	EXHAUST FAN	0.25	0 A	0 A	0.000 VA	120 V	1	6 A	3/4"	1	2	12	12	CB	15 A	4 A	PROVIDE TOGGLE SWITCH
SP	1	SUMP PUMP	0.00	0 A	0 A	1800.000 VA	120 V	1	15 A	3/4"	1	2	12	12	CB	25 A	11 A	DUPLEX PUMP
UH	1A	ELECTRIC CABINET UNIT HEATER	0.00	0 A	12.5 A	0.000 VA	208 V	1	10 A	3/4"	1	2	12	12	CB	15 A	2 A	
UH	1B	ELECTRIC CABINET UNIT HEATER	0.00	0 A	12.5 A	0.000 VA	208 V	1	10 A	3/4"	1	2	12	12	CB	15 A	2 A	
UH	2	ELECTRIC CABINET UNIT HEATER	0.00	0 A	12 A	0.000 VA	208 V	3	10 A	3/4"	1	3	12	12	CB	15 A	2 A	
UH	3	ELECTRIC BASEBOARD HEATER	0.00	0 A	2 A	0.000 VA	208 V	1	2 A	3/4"	1	2	12	12	CB	15 A	2 A	
UH	4A	ELECTRIC WALL HEATER	0.00	0 A	3.6 A	0.000 VA	208 V	1	3 A	3/4"	1	2	12	12	CB	15 A	2 A	
UH	4B	ELECTRIC WALL HEATER	0.00	0 A	3.6 A	0.000 VA	208 V	1	3 A	3/4"	1	2	12	12	CB	15 A	2 A	
UH	5A	ELECTRIC CEILING HEATER	0.00	0 A	19.2 A	0.000 VA	208 V	1	15 A	3/4"	1	2	12	12	CB	25 A	2 A	
UH	5B	ELECTRIC CEILING HEATER	0.00	0 A	19.2 A	0.000 VA	208 V	1	15 A	3/4"	1	2	12	12	CB	25 A	2 A	
UH	5C	ELECTRIC CEILING HEATER	0.00	0 A	19.2 A	0.000 VA	208 V	1	15 A	3/4"	1	2	12	12	CB	25 A	2 A	
UH	5D	ELECTRIC CEILING HEATER	0.00	0 A	19.2 A	0.000 VA	208 V	1	15 A	3/4"	1	2	12	12	CB	25 A	2 A	
UH	6	ELECTRIC UNIT HEATER	0.00	0 A	6 A	0.000 VA	480 V	3	5 A	3/4"	1	3	12	12	CB	15 A	2 A	
WH	1	WATER HEATER	0.00	15 A	0 A	0.000 VA	120 V	1	15 A	3/4"	1	2	12	12	CB	20 A	4 A	
WH	2	WATER HEATER	0.00	1.5 A	0 A	0.000 VA	120 V	1	2 A	3/4"	1	2	12	12	CB	15 A	2 A	

blu line designs
planning | landscape architecture | design
8719 S. Sandy Parkway
Sandy, UT 84070
p 801.679.3157

CLIENT

FARMINGTON CITY
CONTACT: SYLVIA CLARK
PH: 801.939.9295
EMAIL:
SCLARK@FARMINGTON.UTAH.GOV

FARMINGTON

BNA CONSULTING
4225 Lake Park Blvd, Suite 275
West Valley City, UT 84120
P: 801.532.2196
F: 801.532.2305
www.bnaconsulting.com
SALT LAKE ST. GEORGE

100 PERCENT SET

IVY ACRES PARK

1397 WEST COOK LANE
FARMINGTON, UTAH

REVISIONS

NO	APPROVAL	DESCRIPTION

Stamp

PROFESSIONAL ENGINEER
BRIAN HICKS
No. 7760837
STATE OF UTAH

Designed By:	AS
Drawn By:	AS
Date:	02.23.2024
Checked By:	RB
Project No:	22-246

Drawing Title

ELECTRICAL SCHEDULE

Drawing number

E003

PANELBOARD SCHEDULE

PANEL: SP1 **TYPE:** Type 1 **VOLTS:** 120/208 Y **PHASE:** 3 **WIRES:** 4

MOUNTING: SURFACE **LOCATION:** **MAINS:** MLO

BUSSING: ALUMINUM **FED FROM:** LDP

AMP: 400 A

___ SUBFEED LUGS
___ DOOR-IN-DOOR
___ ISO GROUND
___ 200% NEUTRAL
___ SPD

BRANCH BREAKERS

ITEM	AMPS	POLE	WIRE SIZE	CIR. NO.	A	B	C	A	B	C	CIR. NO.	WIRE SIZE	POLE	AMPS	ITEM
WF-1B, VFD FOR 1A	50 A	3	8	1	3699			2005			2	10	3	30 A	WF-3A, TREE FEATURE PUMP
--	--	--	--	3		3699			2005		4	--	--	--	--
--	--	--	--	5			3699			2005	6	--	--	--	--
WF-2C, VFD FOR 2A	70 A	3	4	7	5548			2250			8	10	2	30 A	WF-13B, UV SYSTEM CONTROL...
--	--	--	--	9		5548			2250		10	--	--	--	--
--	--	--	--	11			5548			506	12	12	1	15 A	WF-10, ACID FEEDER
WF-5A, EAST FEATURES PUMP	30 A	3	10	13	2005			2088			14	12	1	15 A	SF-1, EXHAUST FAN
--	--	--	--	15		2005			3360		16	8	1	45 A	DH-1, DUCT HEATER
--	--	--	--	17			2005			1409	18	12	1	20 A	WF-8B, CHEMICAL SYSTEM...
WF-4C, VFD FOR 4A	90 A	3	3	19	7133			1800			20	12	1	25 A	*SP-1, SUMP PUMP
--	--	--	--	21		7133			500		22	12	1	15 A	WP-7B, CHEMICAL SYSTEM...
--	--	--	--	23			7133			500	24	12	1	15 A	WF-7A, CHEMICAL SYSTEM...
ALARM PANEL	20 A	1	12	25	500			--			26	--	1	--	SPACE ONLY
SPACE ONLY	--	1	--	27		--			--		28	--	1	--	SPACE ONLY
SPACE ONLY	--	1	--	29			--			--	30	--	1	--	SPACE ONLY
SPARE	20 A	1	--	31	0			0			32	--	1	20 A	SPARE
SPARE	20 A	1	--	33		0			0		34	--	1	20 A	SPARE
SPARE	20 A	1	--	35			0			0	36	--	1	20 A	SPARE
SPARE	20 A	1	--	37	0			0			38	--	1	20 A	SPARE
SPARE	20 A	1	--	39		0			0		40	--	1	20 A	SPARE
SPARE	20 A	1	--	41			0			0	42	--	1	20 A	SPARE
					27029	26501	22806	**TOTAL (VA)**							**CONNECTED LOAD TOTAL**
					230 A	226 A	190 A	**AMPS/PHASE**							75836 VA

AIC RATING _____ **AMPS RMS SYSM.**

NOTES:
* PROVIDE 5mA GFCI CIRCUIT BREAKER
** PROVIDE ARC-FAULT CIRCUIT BREAKER
ELECTRICAL PANEL INSTALLED IN THE POOL EQUIPMENT ROOM, SHALL MEET CORROSION RESISTANCE REQUIRMENTS OF NEC 2020 ARTICLE 680.14, I.E. BE NEMA-4X RATED.

SWITCHBOARD SCHEDULE

Switchboard: MDP

LOCATION: SITE 150
SUPPLY FROM: RMP TRANSFORMER
MOUNTING: PAD MOUNTED
ENCLOSURE: NEMA 3R
BUSSING: ALUMINUM

VOLTS: 480/277 Y
PHASE: 3
WIRES: 4

AIC RATING:
MAINS TYPE:
MAINS RATING:
DOOR-IN-DOOR
200% NEUTRAL
SPD: TYPE C

CKT	CIRCUIT DESCRIPTION	# OF POLES	AMP RATING	A	B	C	REMARKS
1	HL1	3	100 A	10264 VA	10100 VA	8152 VA	
2	T1	3	600 A	43058 VA	76523 VA	79418 VA	
3							
4							
5							
6							
7							
8							
9							
10							
			TOTAL LOAD (VA):	**53323 VA**	**86623 VA**	**87570 VA**	
			TOTAL LOAD (AMPS):	**193 A**	**331 A**	**335 A**	

TOTAL CONN. LOAD:	224516 VA
TOTAL CURRENT (AVG):	270 A

NOTES:

PANELBOARD SCHEDULE

PANEL: HL1 **TYPE:** Type 1 **VOLTS:** 480/277 Y **PHASE:** 3 **WIRES:** 4

MOUNTING: SURFACE **LOCATION:** **MAINS:** MLO

BUSSING: ALUMINUM **FED FROM:** MDP

AMP: 100 A

___ SUBFEED LUGS
___ DOOR-IN-DOOR
___ ISO GROUND
___ 200% NEUTRAL
___ SPD

BRANCH BREAKERS

ITEM	AMPS	POLE	WIRE SIZE	CIR. NO.	A	B	C	A	B	C	CIR. NO.	WIRE SIZE	POLE	AMPS	ITEM
MUSCO COURT LIGHTING	20 A	1	6	1	3240			582			2	12	3	15 A	WF-29B, ELECTRIC CHAIN HOIST
MUSCO COURT LIGHITNG	20 A	1	6	3		3240			582		4	--	--	--	--
MUSCO COURT LIGHTING	20 A	1	6	5			3240			582	6	--	--	--	--
MUSCO COURT LIGHITNG	20 A	1	8	7	3240			1330			8	12	3	15 A	UH-6, ELECTRIC UNIT HEATER
MUSCO COURT LIGHTING	20 A	1	6	9		3240			1330		10	--	--	--	--
TREE LIGHTING/DMX SPLITER	20 A	1	6	11			3000			1330	12	--	--	--	--
WEST SITE LIGHTING	20 A	1	6	13	1872			--			14	--	1	--	SPACE ONLY
EAST SITE LIGHTING	20 A	1	6	15		1708			--		16	--	1	--	SPACE ONLY
SPACE ONLY	--	1	--	17			--			--	18	--	1	--	SPACE ONLY
SPACE ONLY	--	1	--	19	--			--			20	--	1	--	SPACE ONLY
SPACE ONLY	--	1	--	21		--			--		22	--	1	--	SPACE ONLY
SPACE ONLY	--	1	--	23			--			--	24	--	1	--	SPACE ONLY
SPACE ONLY	--	1	--	25	--			--			26	--	1	--	SPACE ONLY
SPACE ONLY	--	1	--	27		--			--		28	--	1	--	SPACE ONLY
SPACE ONLY	--	1	--	29			--			--	30	--	1	--	SPACE ONLY
SPARE	20 A	1	--	31	0			0			32	--	1	20 A	SPARE
SPARE	20 A	1	--	33		0			0		34	--	1	20 A	SPARE
SPARE	20 A	1	--	35			0			0	36	--	1	20 A	SPARE
SPARE	20 A	1	--	37	0			0			38	--	1	20 A	SPARE
SPARE	20 A	1	--	39		0			0		40	--	1	20 A	SPARE
SPARE	20 A	1	--	41			0			0	42	--	1	20 A	SPARE
					10264	10100	8152	**TOTAL (VA)**							**CONNECTED LOAD TOTAL**
					38 A	38 A	29 A	**AMPS/PHASE**							28517 VA

AIC RATING _____ **AMPS RMS SYSM.**

NOTES:
* PROVIDE 5mA GFCI CIRCUIT BREAKER
** PROVIDE ARC-FAULT CIRCUIT BREAKER

SWITCHBOARD SCHEDULE

Switchboard: LDP

LOCATION: SITE 150
SUPPLY FROM: T1
MOUNTING: PAD MOUNTED
ENCLOSURE: NEMA 3R
BUSSING: ALUMINUM

VOLTS: 120/208 Y
PHASE: 3
WIRES: 4

AIC RATING:
MAINS TYPE:
MAINS RATING:
DOOR-IN-DOOR
200% NEUTRAL
SPD:

CKT	CIRCUIT DESCRIPTION	# OF POLES	AMP RATING	A	B	C	REMARKS
1	L1	3	150 A	9532 VA	11775 VA	10666 VA	
2	SP1	3	400 A	27029 VA	26501 VA	22806 VA	
3	L2	3	150 A	8762 VA	9941 VA	9586 VA	
4	FOOD TRUCK PEDESTALL	2	20 A	5200 VA	5200 VA		
5	FOOD TRUCK PEDESTALL	2	20 A	5200 VA	5200 VA		
6	FOOD TRUCK PEDESTALL	2	20 A	5200 VA	5200 VA		
7	FOOD TRUCK PEDESTALL	2	20 A	5200 VA	5200 VA		
8	FOOD TRUCK PEDESTALL	2	20 A	5200 VA	5200 VA		
9	STAGE PEDESTALL	2	20 A	5200 VA	5200 VA		
10							
			TOTAL LOAD (VA):	**76523 VA**	**79418 VA**	**43058 VA**	
			TOTAL LOAD (AMPS):	**681 A**	**705 A**	**359 A**	

TOTAL CONN. LOAD:	195999 VA
TOTAL CURRENT (AVG):	544 A

NOTES:

PANELBOARD SCHEDULE

PANEL: L1 **TYPE:** Type 1 **VOLTS:** 120/208 Y **PHASE:** 3 **WIRES:** 4

MOUNTING: SURFACE **LOCATION:** **MAINS:** MLO

BUSSING: ALUMINUM **FED FROM:** LDP

AMP: 150 A

___ SUBFEED LUGS
___ DOOR-IN-DOOR
___ ISO GROUND
___ 200% NEUTRAL
___ SPD

BRANCH BREAKERS

ITEM	AMPS	POLE	WIRE SIZE	CIR. NO.	A	B	C	A	B	C	CIR. NO.	WIRE SIZE	POLE	AMPS	ITEM
IRRIGATION CONTROLLER	20 A	1	12	1	180			1153			2	12	3	15 A	UH-2, ELECTRIC CABINET UNIT...
RECEPT MAINTENANCE	20 A	1	12	3		1260			1153		4	--	--	--	--
MAINTENANCE LIGHTING	20 A	1	12	5			230			1153	6	--	--	--	--
MUSCO CONTROLLER	20 A	1	12	7	1500			300			8	12	2	15 A	UH-4A, ELECTRIC WALL HEATER
EF-2B, EXHAUST FAN	15 A	1	4	9		2583			300		10	--	--	--	--
FESTOON LIGHTING/FIRE...	20 A	1	4	11			704			180	12	12	1	15 A	WH-2, WATER HEATER
EXTERIOR PAVILION LIGHTING	20 A	1	4	13	1800			500			14	4	1	20 A	PEDESTAL CHARGING STATION
DMX CONTROLLER	20 A	1	12	15		500			1000		16	4	1	20 A	PEDESTAL CHARGING STATION
TENT STALL GROUND BOX	20 A	1	4	17			1800			1800	18	6	1	20 A	TENT STALL GROUND BOX
TENT STALL GROUND BOX	20 A	1	6	19	1800			1800			20	6	1	20 A	TENT STALL GROUND BOX
TENT STALL GROUND BOX	20 A	1	6	21		1800			1800		22	8	1	20 A	TENT STALL GROUND BOX
STAGE GROUND BOX	20 A	1	4	23			1800			1800	24	4	1	20 A	STAGE GROUND BOX
LIGHTING	20 A	1	4	25	320			180			26		1	20 A	CHAATSWORTH RECEPT
CHATSWORTH RECEPT	20 A	1		27		180			1200		28		1	20 A	POWER
POWER	20 A	1		29			1200			--	30	--	1	--	SPACE ONLY
SPARE	20 A	1	--	31	0			0			32	--	1	20 A	SPARE
SPARE	20 A	1	--	33		0			0		34	--	1	20 A	SPARE
SPARE	20 A	1	--	35			0			0	36	--	1	20 A	SPARE
SPARE	20 A	1	--	37	0			0			38	--	1	20 A	SPARE
SPARE	20 A	1	--	39		0			0		40	--	1	20 A	SPARE
SPARE	20 A	1	--	41			0			0	42	--	1	20 A	SPARE
					9532	11775	10666	**TOTAL (VA)**							**CONNECTED LOAD TOTAL**
					79 A	100 A	90 A	**AMPS/PHASE**							29974 VA

AIC RATING _____ **AMPS RMS SYSM.**

NOTES:
* PROVIDE 5mA GFCI CIRCUIT BREAKER
** PROVIDE ARC-FAULT CIRCUIT BREAKER

PANELBOARD SCHEDULE

PANEL: L2 **TYPE:** Type 1 **VOLTS:** 120/208 Y **PHASE:** 3 **WIRES:** 4

MOUNTING: SURFACE **LOCATION:** **MAINS:** MLO

BUSSING: ALUMINUM **FED FROM:** LDP

AMP: 150 A

___ SUBFEED LUGS
___ DOOR-IN-DOOR
___ ISO GROUND
___ 200% NEUTRAL
___ SPD

BRANCH BREAKERS

ITEM	AMPS	POLE	WIRE SIZE	CIR. NO.	A	B	C	A	B	C	CIR. NO.	WIRE SIZE	POLE	AMPS	ITEM
PAVILION EXT. RECEPT.	20 A	1	12	1	540			1800			2	12	1	20 A	WH-1, WATER HEATER
PAVILION CONV. RECEPT.	20 A	1	12	3		720			180		4	10	1	20 A	ROOF CONV. RECEPT.
*EWC-1, WATER COOLER WI...	15 A	1	12	5			240			540	6	12	1	20 A	PAVILION UTIL. RECEPT.
ACS1	20 A	1	12	7	500			1040			8	12	2	15 A	UH-1B, ELECTRIC CABINET UNIT...
PAVILION CONV. RECEPT	20 A	1	12	9		900			1040		10	--	--	--	--
DATA RACK	20 A	1	12	11			180			1392	12	12	1	15 A	EF-3B, EXHAUST FAN
DATA RACK	20 A	1	12	13	180			500			14	12	1	15 A	*ES-2, EMERGENCY SHOWER/E...
UH-5A, ELECTRIC CEILING...	25 A	2	12	15		1597			1040		16	12	2	15 A	UH-1A, ELECTRIC CABINET UNIT...
--	--	--	--	17			1597			1040	18	--	--	--	--
UH-5B, ELECTRIC CEILING...	25 A	2	12	19	1597			540			20	10	1	20 A	RECEPT PUMP ROOM-1 109-1
--	--	--	--	21		1597			1102		22	12	2	15 A	ODU-1, OUTDOOR DUCTLESS...
UH-5C, ELECTRIC CEILING...	25 A	2	12	23			1597			1102	24	--	--	--	--
--	--	--	--	25	1597			166			26	12	2	15 A	UH-3, ELECTRIC BASEBOARD...
UH-5D, ELECTRIC CEILING...	25 A	2	12	27		1597			166		28	--	--	--	--
--	--	--	--	29			1597			300	30	12	2	15 A	UH-4B, ELECTRIC WALL HEATER
RCP-1, RECIRC PUMP	15 A	1	12	31	1			300			32	--	--	--	--
SPARE	20 A	1	--	33		0			0		34	--	1	20 A	SPARE
SPARE	20 A	1	--	35			0			0	36	--	1	20 A	SPARE
SPARE	20 A	1	--	37	0			0			38	--	1	20 A	SPARE
SPARE	20 A	1	--	39		0			0		40	--	1	20 A	SPARE
SPARE	20 A	1	--	41			0			0	42	--	1	20 A	SPARE
					8762	9941	9586	**TOTAL (VA)**							**CONNECTED LOAD TOTAL**
					73 A	84 A	81 A	**AMPS/PHASE**							27789 VA

AIC RATING _____ **AMPS RMS SYSM.**

NOTES:
** PROVIDE 5mA GFCI CIRCUIT BREAKER
** PROVIDE ARC-FAULT CIRCUIT BREAKER

100 PERCENT SET

blu line designs
planning | landscape architecture | design
8719 S. Sandy Parkway
Sandy, UT 84070
p 801.679.3157

CLIENT

FARMINGTON CITY
CONTACT: SYLVIA CLARK
PH: 801.939.9295
EMAIL: SCLARK@FARMINGTON.UTAH.GOV

FARMINGTON

BNA CONSULTING
4225 Lake Park Blvd, Suite 275
West Valley City, UT 84120
P: 801.532.2196
F: 801.532.2305
www.bnaconsulting.com
SALT LAKE ST. GEORGE

IVY ACRES PARK

1397 WEST COOK LANE
FARMINGTON, UTAH

REVISIONS

NO.	APPROVAL	DESCRIPTION

Stamp

PROFESSIONAL ENGINEER
BRIAN HICKS
No. 7709037
STATE OF UTAH

Designed By:	AS
Drawn By:	AS
Date:	02.23.2024
Checked By:	RB
Project No:	22-246

Drawing Title

PANELBOARD SCHEDUEL

Drawing number

E004

ACCESS CONTROL TYPE SCHEDULE

LEGEND:

CR = CARD READER
BR = BIO READER
KCR = KEYPAD CARD READER
ICR = INTEGRATED CARD READER

ES = ELECTRIC STRIKE
ML = MAGNETIC LOCK
EL = ELECTRIC LOCK
ECB = ELECTRIC CRASH BAR

DED = DELAYED EGRESS RIM EXIT DEVICE
IDC = INTRUSION DOOR CONTACT
DPS = DOOR POSITION SWITCH
PP = POPIT MODULE

EH = ELECTRIC HINGE
PTL = POWER TRANSFER LOOP
EPT = ELECTRIC POWER TRANSFER
ADO = ADA AUTOMATIC DOOR OPENER

*DIVISION 28 CONTRACTOR SHALL FIELD COORDINATE THE DOOR HARDWARE SPECIFICATIONS, EQUIPMENT, POWER, AND OPERATIONAL REQUIREMENTS FOR

PTE = PUSH TO EXIT BUTTON
REX = REQUEST TO EXIT
KS = KEY OVERRIDE SWITCH

TYPE	DIAGRAM	DESCRIPTION	CREDENTIAL				ELECTRONIC LOCK					CONTACTS			POWER TRANSFER		EXIT DEVICES				ADO	FA RELEASE	NOTES
			CR	BR	KCR	ICR	ES	ML	EL	ECB	DED	IDC	DPS	PP	EH	EPT	PTL	PTE	REX	KS			
A	EY604	SINGLE DOOR WITH CARD READER	1	0	0	0	1	0	0	0	0	0	1	0	0	0	0	0	1	0	No	No	SEE SECURITY GENERAL NOTE #2
B	EY604	SINGLE DOOR WITH ELECTRIFIED DOOR HARDWARE	0	0	0	0	1	0	0	0	0	0	1	0	0	0	0	0	0	0	No	No	SEE SECURITY GENERAL NOTE #2

CAMERA SURVEILLANCE TYPE SCHEDULE

CAMERA TYPE	DESCRIPTION	MANFR.	CAT NO.	CAMERA INFORMATION				NOTES
				RESOLUTION	AUDIO RECORDING	MAX FRAME RATE	INFRARED	
F01C	3.5 MM VARIFOCAL LENS, FIXED DOME	HANWHA	XNV-C8083R	6MP	No	30 FPS	Yes	SEE SECURITY GENERAL NOTE #1
F01L	3.5 MM VARIFOCAL LENS, FIXED DOME	HANWHA	XNV-C8083R	6MP	No	30 FPS	Yes	SEE SECURITY GENERAL NOTE #1
F01W	3.5 MM VARIFOCAL LENS, FIXED DOME	HANWHA	XNV-C8083R	6MP	No	30 FPS	Yes	SEE SECURITY GENERAL NOTE #1
M02L	3.5 MM VARIFOCAL LENS, FIXED DOME	HANWHA	PNM-C9022RV	8MP	No	30 FPS	No	SEE SECURITY GENERAL NOTE #1
M02W	3.5 MM VARIFOCAL LENS, FIXED DOME	HANWHA	PNM-C9022RV	8MP	No	30 FPS	No	SEE SECURITY GENERAL NOTE #1

ACCESS CONTROL TAG LEGEND

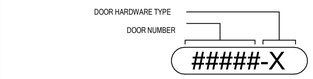

CAMERA SURVEILLANCE TAG LEGEND

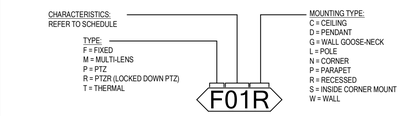

SECURITY GENERAL NOTES

1. PROVIDE ALL SPECIFIED AND NON-SPECIFIED COMPONENTS IN ORDER TO PROVIDE A COMPLETE AND WORKING SYSTEM.
2. PROVIDE ALL NECESSARY MOUNTING HARDWARE FOR CAMERAS, APPROPRIATE TO THE LOCATION IN WHICH THEY ARE INSTALLED.
3. SECURITY INTEGRATOR SHALL COORDINATE ALL DOOR HARDWARE WITH DIVISION 8 FOR LOCK TYPES, POWER SUPPLIES, ETC.
4. SECURITY INTEGRATOR SHALL CAREFULLY REVIEW THE REFLECTED CEILING PLANS AND ARCHITECTURAL ELEVATIONS FOR COMPONENT INSTALLATION.
5. SECURITY INTEGRATOR SHALL CAREFULLY REVIEW DOOR HARDWARE SUBMITTAL AND SUMMARIZE DISCREPANCIES TO TEAM.
6. CONTRACTOR SHALL VERIFY ALL MOUNTING HEIGHTS/LOCATIONS TO ENSURE IDEAL VIEWS FOR EACH CAMERA.
7. EQUIPMENT COUNTS ARE PROVIDED FOR INFORMATION ONLY AT A CONVENIENCE TO THE CONTRACTOR. IT STILL REMAINS THE CONTRACTOR'S RESPONSIBILITY TO VERIFY DRAWING QUANTITIES. IF A DISCREPANCY ARISES BETWEEN THE SCHEDULE COUNTS AND THE DRAWING COUNTS, THE HIGHEST QUANTITY SHALL BE INCLUDED IN THE BID.
8. PROVIDE FIRE ALARM INTERFACE TO UNLOCK ALL INDICATED LOCKS UPON ANY FIRE ALARM INITIATION.
9. COORDINATE WITH THE ELECTRICAL CONTRACTOR PRIOR TO ROUGH-IN TO ENSURE A COMPLETE INSTALLATION IS PROVIDED AND CORRECTLY INSTALLED.
10. ALL CABLING TO DEVICES THAT ARE INSTALLED WITHIN DOOR OR ON MULLIONS SHALL BE ROUTED THROUGH THE MULLIONS. COORDINATE INSTALLATION WITH THE DOOR/WINDOW SYSTEM INSTALLER PRIOR TO ANY ROUGH-IN. MULLION MOUNT CARD READERS DO NOT REQUIRE BACK BOX.
11. ACCESS CONTROL SYSTEM SHALL INCLUDE ANY RELAYS, EXTERNAL POWER SUPPLIES, AUXILIARY DEVICES OR INPUT/OUTPUT MODULES REQUIRED TO SUPPORT DOOR TYPE INDICATED FOR COMPLETE AND FUNCTIONING CARD READER AND DOOR CONTROL.
12. ALL FINAL CAMERA VIEWS SHALL BE APPROVED BY SECURITY ENGINEER PRIOR TO PROJECT COMPLETION.
13. ALL PENETRATIONS OF FIRE RATED FLOORS, WALLS, AND CEILINGS SHALL BE SEALED WITH APPROVED MATERIAL TO MAINTAIN FIRE RATING OF SURFACE PENETRATED.
14. REFER TO SPECIFICATIONS FOR INTEGRATION BETWEEN VIDEO MANAGEMENT, ACCESS CONTROL, INTRUSION DETECTION, FIRE ALARM SYSTEMS, ETC.
15. PROVIDE INTERACTIVE MAP ON VMS WITH CAMERA AND ACCESS CONTROL DEVICES.
16. COORDINATE WITH ELECTRICAL CONTRACTOR AND OWNERS AND REVIEW WHAT ELECTRICAL CIRCUITS THE ACTIVE ACCESS CONTROL & VIDEO SURVEILLANCE EQUIPMENT WILL NEED TO BE CONNECTED TO. (I.E. EMERGENCY BACK-UP POWER CIRCUITS, OR STANDARD/DIRTY POWER CIRCUITS).
17. INSTALL AND PROGRAM THE ACCESS CONTROL AND THE IP VIDEO SURVEILLANCE SYSTEMS TO THE MANUFACTURER'S INSTRUCTIONS, SPECIFICATIONS, INDUSTRIES STANDARDS, AND TO THE OWNER'S REQUIREMENTS.

SECURITY GENERAL SHEET NOTES

1. THE VIDEO SURVEILLANCE CONTRACTOR SHALL PROVIDE ALL OF THE CORRECT HARDWARE AND MOUNTING EQUIPMENT FOR ALL SURVEILLANCE CAMERAS AND EQUIPMENT. PRIOR TO STARTING ANY WORK CONTRACTOR SHALL COORDINATE A MEETING TO REVIEW AND VERIFY"
   A. SURVEILLANCE CAMERA LOCATIONS, HEIGHTS, AND ORIENTATION
   B. DISCUSS WHICH EF/ER/TR ROOMS CAN BE UTILIZED TO INSTALL VIDEO SURVEILLANCE EQUIPMENT INTO
   C. EQUIPMENT AND THE CAT6 NETWORK CABLING SHOULD TERMINATE AND CONNECT TO.
2. PRIOR TO STARTING ANY WORK THE DIV. 28 ACCESS CONTROL CONTRACTOR SHALL COORDINATE A MEETING WITH OWNER, THE DIV. 8 CONTRACTOR, AND THE ELECTRICAL CONTRACTOR TO REVIEW THE DOOR HARDWARE SPECIFICATIONS
   A. VERIFY EXACTLY WHAT ELECTRIFIED DOOR HARDWARE IS GOING TO GET INSTALLED ON EACH DOOR
   B. THE POWER REQUIREMENTS
   C. HOW EACH DOOR WILL NEED TO BE PROGRAMMED TO OPERATE
   D. DISCUSS WHICH AREA OF THE EF/ER/TR ROOM CAN BE UTILIZED TO INSTALL THE ACCESS CONTROL HEAD-END PANELS AND POWER SUPPLIES INTO
   E. WHICH TYPE OF POWER CIRCUITS THESE PANELS SHOULD BE CONNECTED INTO

SHEET INDEX

E001	ELECTRICAL SYMBOLS AND NOTES
E002	ELECTRICAL SCHEDULES
E003	ELECTRICAL SCHEDULE
E004	PANELBOARD SCHEDUEL
E005	SYSTEMS SCHEDULES
E060	ELECTRICAL DIAGRAMS
E061	ELECTRICAL DIAGRAMS
E062	ELECTRICAL DIAGRAMS
E063	SYSTEMS DIAGRAMS
E080	ONE-LINE DIAGRAM
E101	OVERALLL LIGHTING SITE PLAN
E101.ALT	OVERALL LIGHTING SITE PLAN
E102	OVERALL ELECTRICAL SITE PLAN
E103	OVERALL SYSTEMS SITE PLAN
E151	RESTROOM/ PAVILION LIGHTING PLAN
E152	RESTROOM/ PAVILION POWER PLAN
E153	RESTROOM/ PAVILION SYSTEM PLAN
E154	ENLARGED ELECTRICAL SITE PLANS

LOW VOLTAGE SCOPE OF WORK

NOTES:...

1. RESPONSIBILITY MATRIX DELINEATES THE SCOPE OF WORK BETWEEN THE OWNER AND THE CONTRACTORS. CONTRACTORS ARE RESPONSIBLE TO COORDINATE BETWEEN EACH OTHER FOR THE FULL SCOPE OF WORK THEY ARE RESPONSIBLE FOR.
2. ADDITIONAL NOTES MAY BE PRESENT WITHIN THE CONTRACT DOCUMENTS INDICATING SPECIFIC EQUIPMENT PROVIDED BY OTHERS OR REQUIRE INSTALLATION BY SPECIFIC DIVISIONS.
3. INSTALLER PROVIDING THE SYSTEM CABLING SHALL PROVIDE THE CABLING, TERMINATION AND CERTIFICATION FOR A COMPLETE SYSTEM INSTALLATION, UNLESS OTHERWISE SPECIFICALLY NOTED WITHIN THE CONTRACT DOCUMENTS.
4. INSTALLER TO VERIFY WITH CONTRACT DOCUMENTS FOR THE CONNECTION TYPE (MALE OR FEMALE) REQUIRED FOR EACH SYSTEM.
5. REFER TO DRAWINGS AND SPECIFICATIONS FOR ADDITIONAL REQUIREMENTS.

LEGEND

AC	ACCESS CONTROL CONTRACTOR
AV	AUDIOVISUAL CONTRACTOR
DC	DOOR HARDWARE CONTRACTOR
EC	ELECTRICAL CONTRACTOR
FR	FURNITURE CONTRACTOR
GC	GENERAL CONTRACTOR
IC	INTRUSTION DETECTION CONTRACTOR
LVC	DATA CABLING CONTRACTOR
NIC	NOT IN CONTRACT
OWNER	OWNER
SC	VIDEO SURVEILLANCE CONTRACTOR
SPEC	SEE SPECIFICATIONS

DESCRIPTION	FURNISHED BY	INSTALLED BY
GENERAL		
EQUIPMENT POWER (120V, 208V, 240V, 277V, 480V)	EC	EC
ROUGH OR FINISHED TRIM, CASEWORK, MILLWORK, EQUIPMENT RACK PEDESTALS, STRUCTURAL WORK FOR SPECIAL CONSTRUCTION	GC	GC
STRUCTURAL BACKING AND SUPPORT FOR WALL MOUNTED EQUIPMENT	GC	GC
SUPPORT CABLES, PRE-CONSTRUCTION KITS, TILE BRIDGES AND/OR BACK BOXES FOR CEILING MOUNTED DEVICES.	EC	EC
ACCESS CONTROL		
ROUGH-IN - CONDUIT W/PULL STRING, JUNCTION BOXES, FLOOR BOXES, ETC.	EC	EC
CATEGORY CABLE / FIBER OPTIC CABLE	LVC	LVC
NON-CATEGORY CABLE	AC	AC
ACCESS CONTROL SERVER	AC	AC
ACCESS CONTROL SOFTWARE	AC	AC
DOOR CONTROLLER POWER SUPPLIES	AC	AC
DOOR CONTROLLERS	AC	AC
DOOR LOCKING ELECTRONIC HARDWARE	DC	DC
LOCK & ACCESS CONTROL POWER SUPPLIES	AC	AC
NETWORK SWITCHES WITHIN THE ER(MDF)/TR(IDF) FOR ACCESS CONTROL AND/OR INTRUSION SYSTEMS	LVC	LVC
AUDIOVISUAL		
ROUGH-IN - CONDUIT W/PULL STRING, JUNCTION BOXES, FLOOR BOXES, FLAT PANEL DISPLAY BACK BOXES, ETC.	EC	EC
SPECIALTY BACK BOXES, TILE BRIDGES, SUPPORT CABLES, PRECONSTRUCTION KITS, ETC. FOR AUDIOVISUAL COMPONENTS (TOUCH PANELS, LOUDSPEAKERS, KEYPADS, ETC.)	AV	AV
CATEGORY CABLE / FIBER OPTIC CABLE FROM DEVICE LOCATION TO TR(MDF)/ER(IDF) TERMINATED IN PATCH PANEL	LVC	LVC
CATEGORY CABLING FROM DEVICE TO DEVICE, NOT TERMINTATED IN PATCH PANELS WITHIN THE ER(MDF/TR(IDF)	AV	AV
COAXIAL CABLE	LVC	LVC
LIGHTING CONTROL SYSTEM INTERFACE DEVICE(S) AND CABLING TO AV CONTROL SYSTEM. TERMINATION INTO AV SYSTEM CONTROLLER BY AV INSTALLER	EC	EC
MOTORIZED SHADE CONTROL SYSTEM INTERFACE DEVICE(S) AND CABLING TO AV CONTROL SYSTEM. TERMINATION INTO AV SYSTEM	AV	AV
CUSTOM AUDIOVISUAL CONNECTOR INSERT PLATE FOR FLOOR BOXES AND/OR WALL PLATES	AV	AV
EQUIPMENT RACKS NOT WITHIN THE ER(MDF)/TR(IDF) FOR SYSTEM COMPONENTS	AV	AV
FURNITURE BOX TABLE CUTTING	GC	GC
FURNITURE BOXES WITH AUDIOVISUAL CONNECTIONS AND/OR CABLES	AV	AV
PROJECTOR SCREEN MANUAL AND/OR MOTORIZED HOUSING	AV	AV
PROJECTOR SCREEN MANUAL AND/OR MOTORIZED ROLLER	AV	AV
PROJECTOR SCREEN, FIXED FRAME (SIMILAR TO WHITEBOARD)	GC	GC
FLAT PANEL MONITOR MOUNTS	AV	AV
FLAT PANEL MONITORS	AV	AV
INSTRUCTOR'S LECTERNS/CONSOLES WITH INTEGRATED AUDIOVISUAL SYSTEMS COMPONENTS	AV	AV
INTERACTIVE FLAT PANEL MONITORS AND MOUNTS	OWNER	OWNER
NETWORK SWITCHES WITHIN THE ER(MDF)/TR(IDF) FOR AUDIOVISUAL NETWORK, AUDIO, CONTROL AND VIDEO	LVC	LVC
VIDEO PROJECTOR	AV	AV
VIDEO PROJECTOR MOUNTS	AV	AV
SECURITY		
ROUGH-IN - CONDUIT W/PULL STRING, JUNCTION BOXES, FLOOR BOXES, ETC.	EC	EC
CAMERA ETHERNET EXTENDERS AND POE INJECTORS	SC	SC
CATEGORY CABLE / FIBER OPTIC CABLE	LVC	LVC
SURGE SUPRPESSION	SC	SC
TERMINATE CABLE (PATCH PANEL AND DATA PORT), INCLUDING TESTING	LVC	LVC
EQUIPMENT RACKS WITHIN THE ER(MDF)/TR(IDF) FOR SYSTEM COMPONENTS	LVC	LVC
NETWORK SWITCHES WITHIN THE ER(MDF)/TR(IDF) FOR VIDEO SURVEILLANCE	LVC	LVC
POE DATA SWITCHES	LVC	LVC
SECURITY CAMERA MOUNTS	SC	SC
SECURITY CAMERAS	SC	SC
VIDEO MANAGEMENT SOFTWARE (VMS) AND CAMERA LICENSES	SC	SC
TELEPHONE / DATA		
ROUGH-IN - CONDUIT W/PULL STRING, JUNCTION BOXES, FLOOR BOXES, FLAT PANEL DISPLAY BACK BOXES, ETC.	EC	EC
CATEGORY CABLE / FIBER OPTIC CABLE	LVC	LVC
PATCH CABLES FOR DEVICES WITHIN THE TR/ER FOR CONNECTION BETWEEN PATCH PANELS AND NETWORK SWITCHES	LVC	LVC
TERMINATE CABLE (PATCH PANEL AND DATA PORT), INCLUDING TESTING	LVC	LVC
CUSTOM TELECOMMUNICATIONS CONNECTOR INSERT PLATE FOR FLOOR BOXES AND/OR WALL PLATES	EC	EC
DATA SWITCHES, SERVERS, FIREWALL, ETC	LVC	LVC
EQUIPMENT RACKS WITHIN THE ER(MDF)/TR(IDF) FOR SYSTEM COMPONENTS	LVC	LVC
RACK MOUNT UPS, POWER DISTRIBUTION UNIT (PDU)	LVC	LVC
WIRELESS ACCESS POINTS	LVC	LVC

100 PERCENT SET

blu line designs
planning | landscape architecture | design
8719 S. Sandy Parkway
Sandy, UT 84070
p 801.679.3157

CLIENT

FARMINGTON CITY
CONTACT: SYLVIA CLARK
PH: 801.939.9295
EMAIL:
SCLARK@FARMINGTON.UTAH.GOV

FARMINGTON

BNA CONSULTING
4225 Lake Park Blvd, Suite 275
West Valley City, UT 84120
P: 801.532.2196
F: 801.532.2305
www.bnaconsulting.com
SALT LAKE ST. GEORGE

IVY ACRES PARK

1397 WEST COOK LANE
FARMINGTON, UTAH

REVISIONS

NO.	APPROVED	DESCRIPTION

Stamp



Designed By:	AS
Drawn By:	AS
Date:	02.23.2024
Checked By:	RB
Project No:	22-246

Drawing Title

SYSTEMS SCHEDULES

Drawing number

E005

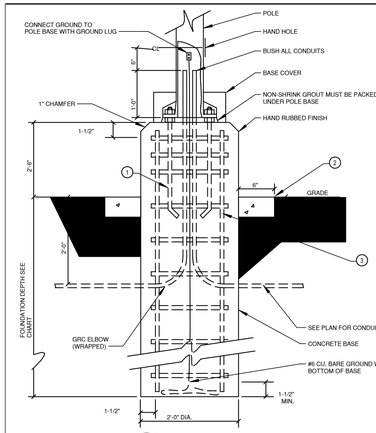

POLE FOUNDATION DEPTH

POLE HEIGHT	2'-6" ABOVE GRADE
10'	4'
15'	4'-6"
20'	5'
25'	5'-6"
30'	6'
35'	6'-6"
40'	7'

* ALL FOUNDATIONS ARE 24" IN DIAMETER UNLESS NOTED OTHERWISE

PROVIDE BUSSMAN HEB FUSEHOLDER (OR LITTELFUSE LEB-XX-S) WITH "BREAKAWAY" RECEPTACLES IN ALL CONDUCTORS RUNNING TO THE TOP OF EACH POLE. LOCATE FUSEHOLDER AT HAND HOLE OR IN BASE JUNCTION BOX AS APPLICABLE

1. (4) ANCHOR BOLTS (GALVANIZED) FURNISHED WITH POLE. SIZE PER POLE MANUFACTURER
2. PROVIDE CONCRETE MOW STRIP WHERE LOCATED IN GRASS. MOW STRIP SHALL BE FLUSH W/GRASS. MOW STRIP SHALL SLOPE TO ACCOMMODATE GRADE SLOPE
3. (4) #7 REBAR WITH #4 RINGS 3" FROM SOIL, WITH (3) RINGS IN TOP 12", WITH (1) RING EVERY 12" O.C. THRU COMPLETE POLE BASE

DIAGRAM C003 LIGHTING POLE FOUNDATION
NTS

NOTES

1. PROVIDE PULL CORD IN ALL EMPTY RACEWAYS.
2. BOND ALL RACEWAYS (SIZED PER NEC REQUIREMENTS) TO ELECTRICAL SERVICE GROUND

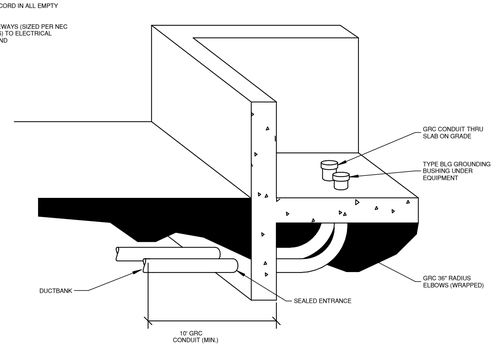

DIAGRAM F002 BUILDNG ENTRANCE CONDUITS
NTS

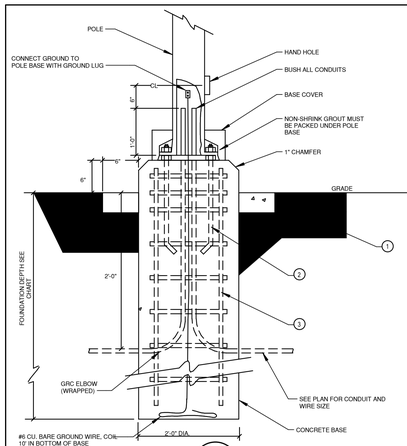

POLE FOUNDATION DEPTH

POLE HEIGHT	FLUSH TO 6" ABOVE GRADE
10'	3'
15'	3'-6"
20'	4'
25'	4'-6"
30'	5'
35'	5'-6"
40'	6'

* ALL FOUNDATIONS ARE 24" IN DIAMETER UNLESS NOTED OTHERWISE.

PROVIDE BUSSMAN HEB FUSEHOLDER (OR LITTELFUSE LEB-XX-S) WITH "BREAKAWAY" RECEPTACLES IN ALL CONDUCTORS RUNNING TO THE TOP OF EACH POLE. LOCATE FUSEHOLDER AT HAND HOLE OR IN BASE JUNCTION BOX AS APPLICABLE

1. PROVIDE CONCRETE MOW STRIP WHERE LOCATED IN GRASS. MOW STRIP SHALL BE FLUSH W/GRASS. MOW STRIP SHALL SLOPE TO ACCOMMODATE GRADE SLOPE
2. (4) ANCHOR BOLTS (GALVANIZED) FURNISHED WITH POLE. SIZE PER POLE MANUFACTURER
3. (4) #7 REBAR WITH #4 RINGS 3" FROM SOIL, WITH (3) RINGS IN TOP 12", WITH (1) RING EVERY 12" O.C. THRU COMPLETE POLE BASE

DIAGRAM C002 LIGHTING POLE FOUNDATION
NTS

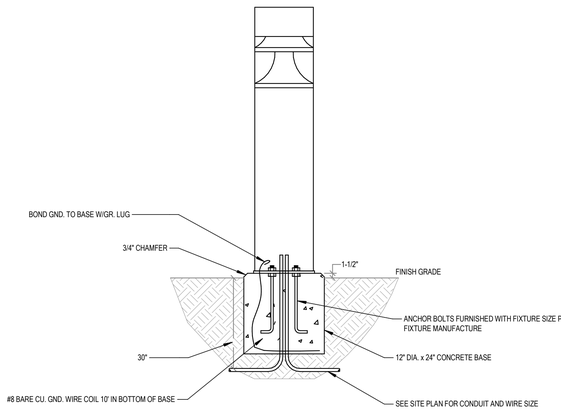

DIAGRAM B005 BOLLARD FIXTURE MOUNTING
NTS

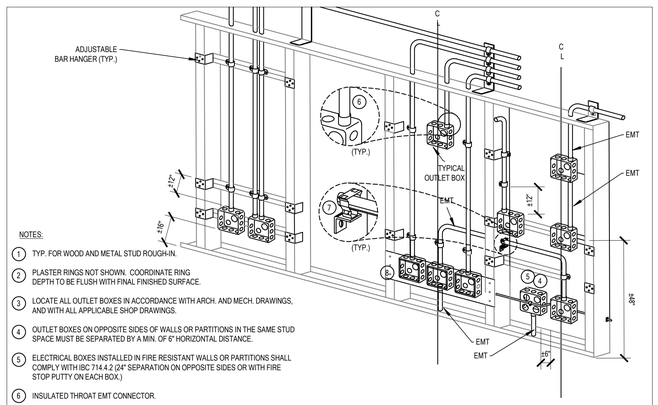

NOTES:

1. TYP. FOR WOOD AND METAL STUD ROUGH-IN.
2. PLASTER RINGS NOT SHOWN. COORDINATE RING DEPTH TO BE FLUSH WITH FINAL FINISHED SURFACE.
3. LOCATE ALL OUTLET BOXES IN ACCORDANCE WITH ARCH. AND MECH. DRAWINGS, AND WITH ALL APPLICABLE SHOP DRAWINGS.
4. OUTLET BOXES ON OPPOSITE SIDES OF WALLS OR PARTITIONS IN THE SAME STUD SPACE MUST BE SEPARATED BY A MIN. OF 6" HORIZONTAL DISTANCE.
5. ELECTRICAL BOXES INSTALLED IN FIRE RESISTANT WALLS OR PARTITIONS SHALL COMPLY WITH IBC 714.4.2 (24" SEPARATION ON OPPOSITE SIDES OR WITH FIRE STOP PUTTY ON EACH BOX.)
6. INSULATED THROAT EMT CONNECTOR.
7. CADDY FASTENER, THROUGH STUD CABLE/CONDUIT SUPPORT .
8. CADDY BOX MOUNTING BRACKET .

DIAGRAM H004 TYPICAL ROUGH IN REQUIREMENTS
NTS

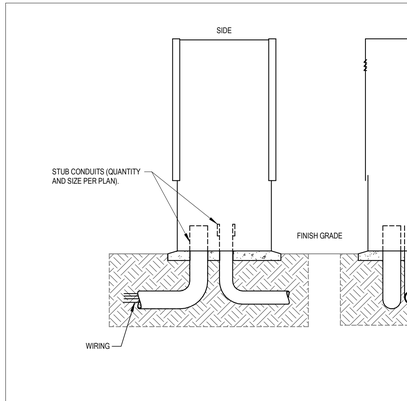

DIAGRAM Q008 FREE-STANDING ENCLOSURE
NTS

NOTES:

1. SIZE PER ONE-LINE.
2. BOND ACROSS ALL DIELECTRIC UNIONS IN WATER PIPE.
3. LOCATE ADJACENT TO MAIN ELECTRICAL DISCONNECTION MEANS.

BC SIZE
D 2/0-#4 CU
D 3/0-#1 CU
D 75'-#2/0 CU
> 75'-#3/0 CU

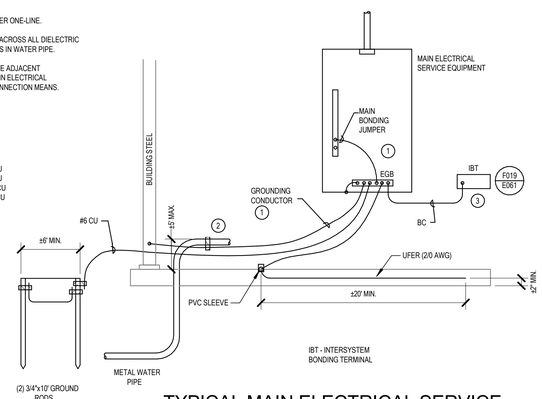

DIAGRAM F020 TYPICAL MAIN ELECTRICAL SERVICE GROUNDING
NTS

GENERAL NOTES:

1. SEE SPECIFICATION FOR ALL INSTALLATION REQUIREMENTS.
2. INSTALL DETECTABLE MARKING TAPE FOR ALL UNDERGROUND WIRING. SEE SPECIFICATION FOR MORE INFORMATION.

ANCHOR/STRAP AT ALL VERTICAL CONDUIT SWEEPS. TIE CONDUIT TO REBAR AS REQUIRED. FOR LARGER CONDUIT INSTALLATIONS, PROVIDE UNDERGROUND RACKING SYSTEM.

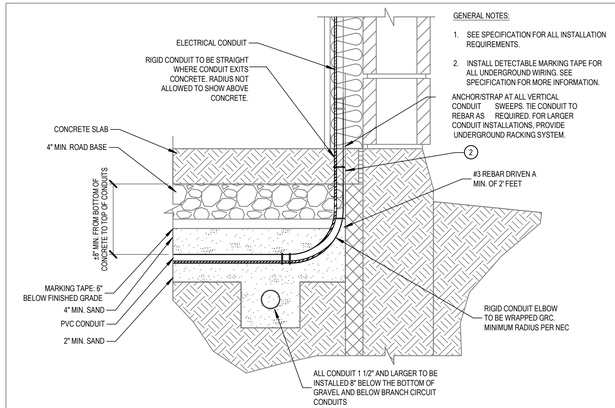

DIAGRAM F016 TYPICAL CONDUIT INSTALLATION
NTS

blu line designs
planning | landscape architecture | design
8719 S. Sandy Parkway
Sandy, UT 84070
p 801.679.3157

CLIENT

FARMINGTON CITY
CONTACT: SYLVIA CLARK
PH: 801.939.9295
EMAIL: SCLARK@FARMINGTON.UTAH.GOV

FARMINGTON

BNA CONSULTING
4225 Lake Park Blvd, Suite 275
West Valley City, UT 84120
P: 801.532.2196
F: 801.532.2305
www.bnaconsulting.com
SALT LAKE ST. GEORGE

IVY ACRES PARK

1397 WEST COOK LANE
FARMINGTON, UTAH

100 PERCENT SET

REVISIONS

NO.	symmetry	DESCRIPTION

Stamp

PROFESSIONAL ENGINEER BRIAN HICKS No. 7700370 STATE OF UTAH

Designed By:	AS
Drawn By:	AS
Date:	02.23.2024
Checked By:	RB
Project No:	22-246

Drawing Title

ELECTRICAL DIAGRAMS

Drawing number

E060

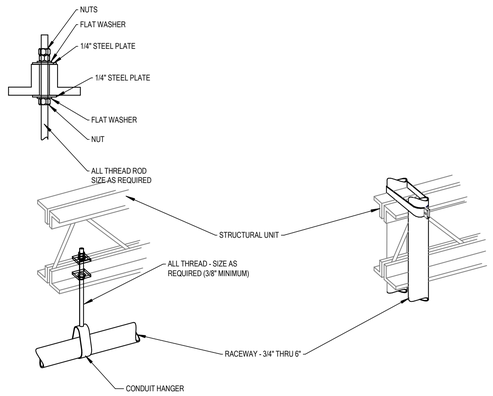

DIAGRAM H003 TYPICAL RACEWAY SUPPORT METHODS

NTS

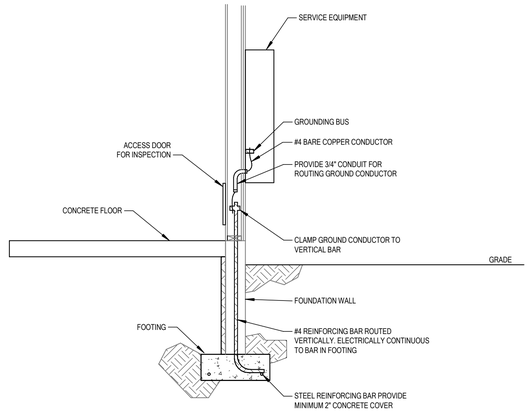

DIAGRAM F027 UFER GROUNDING

NTS

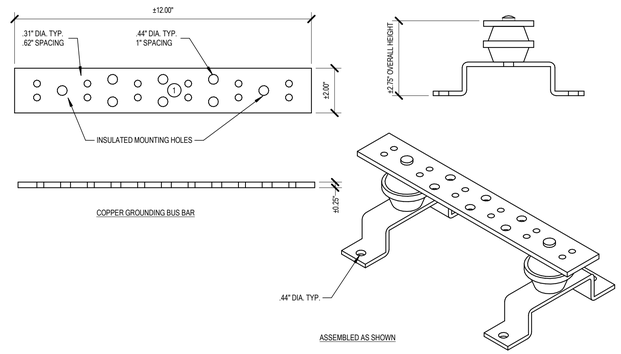

DIAGRAM F019 GROUNDING BUS BAR "IBT"

NTS

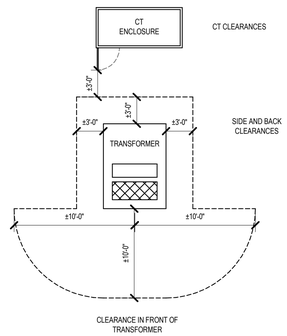

DIAGRAM Q014 TRANFORMER/CT ENCLOSURE LAYOUT (RMP)

NTS

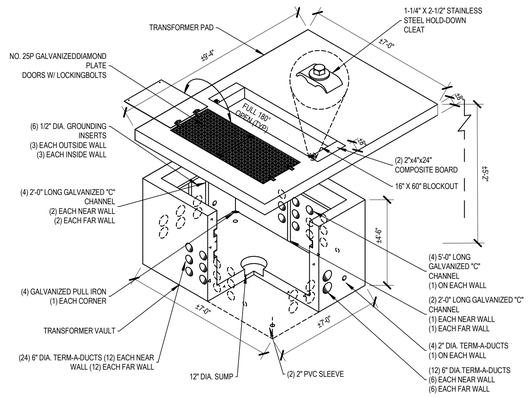

DIAGRAM Q006 TRANSFORMER VAULT (1000-2500KVA)

NTS

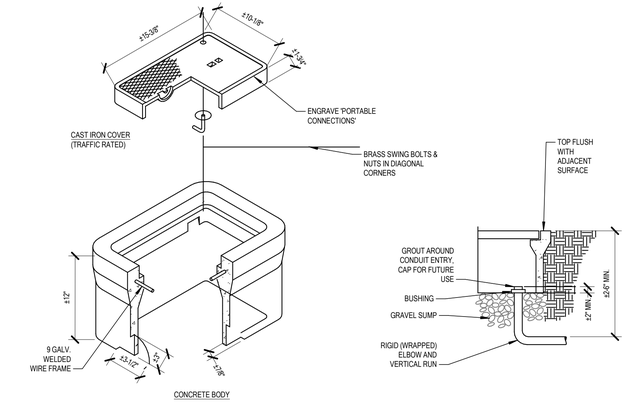

DIAGRAM L006 CONCRETE J-BOX

NTS

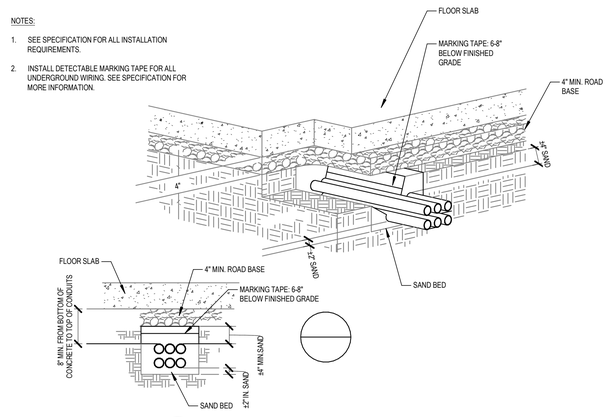

DIAGRAM U007 CONDUIT BELOW SLAB

NTS

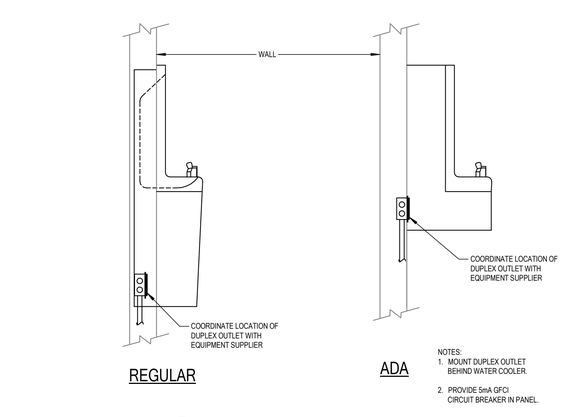

DIAGRAM R002 ELECTRIC WATER COOLER (EWC)

NTS

100 PERCENT SET

blu line designs
planning | landscape architecture | design
8719 S. Sandy Parkway
Sandy, UT 84070
p 801.679.3157

CLIENT

FARMINGTON CITY
CONTACT: SYLVIA CLARK
PH: 801.939.9295
EMAIL: SCLARK@FARMINGTON.UTAH.GOV

FARMINGTON

BNA CONSULTING
4225 Lake Park Blvd, Suite 275
West Valley City, UT 84120
P: 801.532.2196
F: 801.532.2305
SALT LAKE ST. GEORGE
www.bnaconsulting.com

IVY ACRES PARK

1397 WEST COOK LANE
FARMINGTON, UTAH

REVISIONS

NO.	APPROVAL	DESCRIPTION

Stamp

PROFESSIONAL ENGINEER
BRIAN HICKS
No. 7760837
STATE OF UTAH

Designed By:	AS
Drawn By:	AS
Date:	02.23.2024
Checked By:	RB
Project No:	22-246

Drawing Title

ELECTRICAL DIAGRAMS

Drawing number

E061

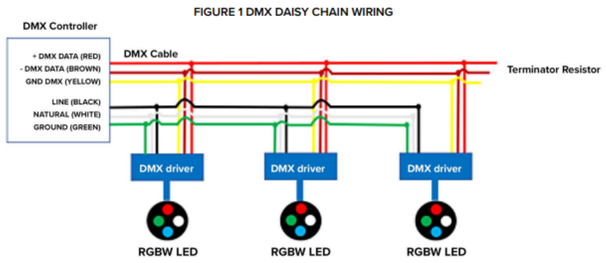

DIAGRAM 1 DMX WIRING
NTS

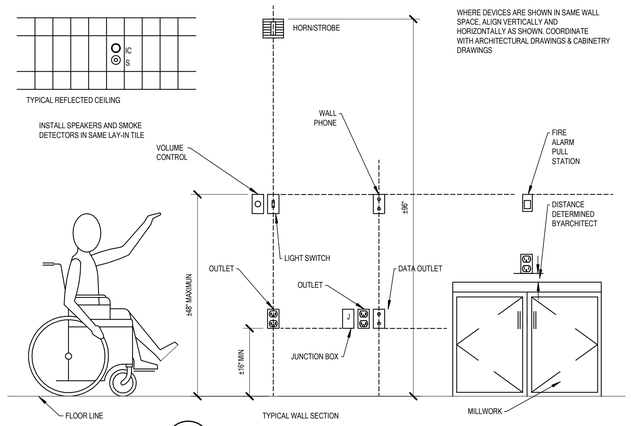

DIAGRAM R001 DEVICE MOUNTING HEIGHTS
NTS

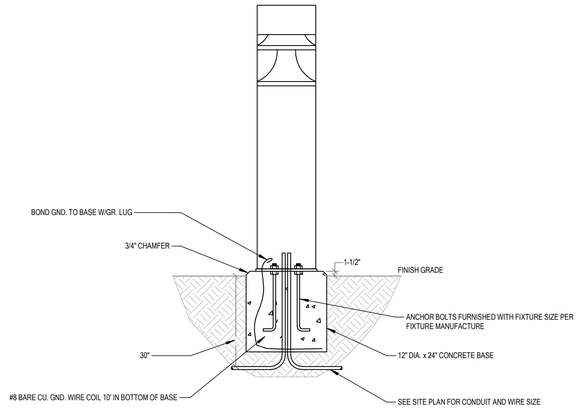

DIAGRAM B005 BOLLARD FIXTURE MOUNTING
NTS

NOTES:
1. PROVIDE 2-HOLE COMPRESSION LUGS AS REQUIRED.

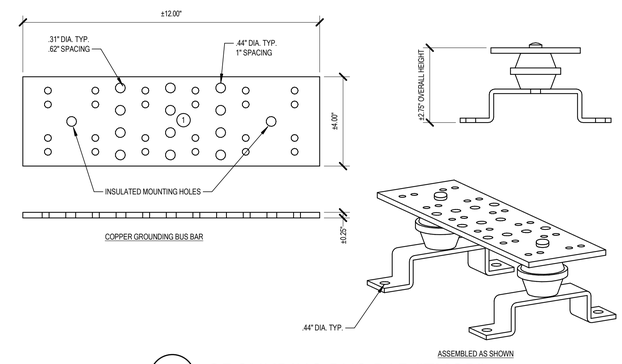

DIAGRAM F018 GROUNDING BUS BAR "TMGB"
NTS

100 PERCENT SET

blu line designs
planning | landscape architecture | design
8719 S. Sandy Parkway
Sandy, UT 84070
p 801.679.3157

CLIENT
FARMINGTON CITY
CONTACT: SYLVIA CLARK
PH: 801.939.9295
EMAIL:
SCLARK@FARMINGTON.UTAH.GOV

FARMINGTON

BNA CONSULTING
4225 Lake Park Blvd, Suite 275
West Valley City, UT 84120
P: 801.532.2196
F: 801.532.2305
www.bnaconsulting.com
SALT LAKE ST. GEORGE

IVY ACRES PARK

1397 WEST COOK LANE
FARMINGTON, UTAH

REVISIONS

NO.	DATE	DESCRIPTION

Stamp



Designed By:	AS
Drawn By:	AS
Date:	02.23.2024
Checked By:	RB
Project No:	22-246

Drawing Title
ELECTRICAL DIAGRAMS

Drawing number
E062

DIAGRAM NOTES

1. REFER TO FLOOR PLANS AND SPECIFICATIONS FOR QUANTITY OF CAMERAS. CAMERAS SHOWN FOR DIAGRAMMATIC PURPOSES ONLY.
2. CONNECT SECOND NIC TO OWNERS LAN. THIS MAY BE THE SAME SWITCH, DIFFERENT VLAN. COORDINATE WITH OWNER'S IT DEPARTMENT FOR CONNECTIONNETWORK REQUIREMENTS. DO NOT CONNECT BOTH NICS TO THE SAME NETWORK AS THE CAMERAS.

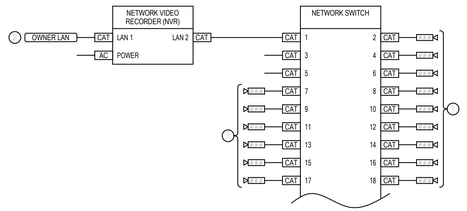

DIAGRAM EY102 IP CAMERA ENDPOINT CONNECTION
NTS

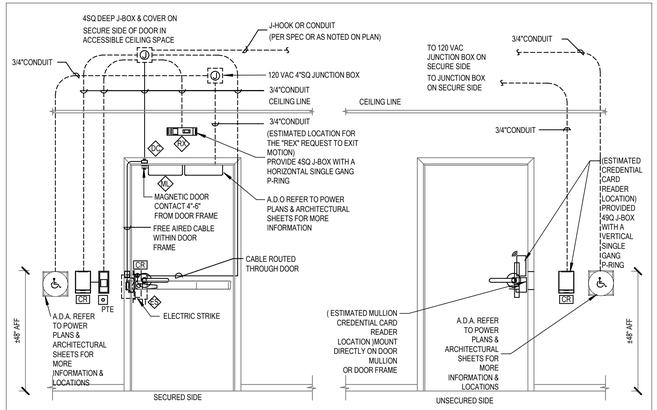

DIAGRAM EY604 ACCESS CONTROL DOOR HARDWARE SINGLE DOOR
NTS

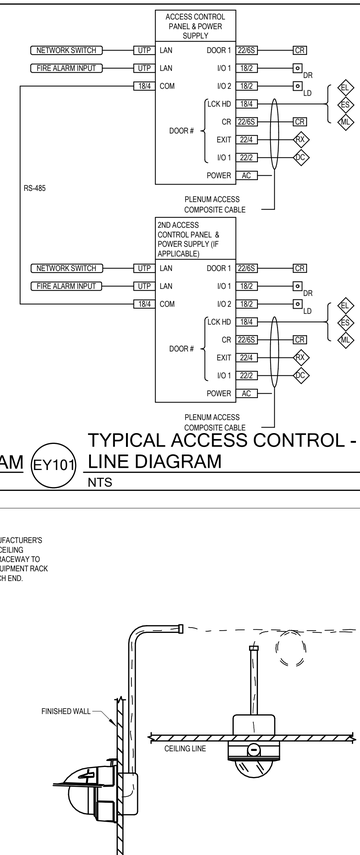

DIAGRAM EY101 TYPICAL ACCESS CONTROL - ONE LINE DIAGRAM
NTS

NOTES:

TMGB - TELECOMMUNICATIONS MAIN GROUNDING BUS.

IBT - INTERSYSTEM BONDING TERMINAL.

HC - HORIZONTAL CROSS-CONNECT ROOM.

MC - MAIN CROSS-CONNECT ROOM.

TGB - TELECOMMUNICATIONS GROUNDING BUS.

TBB - TELECOMMUNICATIONS BONDING BACKBONE.

BC - BONDING CONDUCTOR.

TR - TELECOMMUNICATIONS ROOM.

EF - ENTRANCE FACILITY.

NOTES:

1. PROVIDE INSULATED GROUNDING BUSHINGS.

BC & TBB CONDUCTOR SIZE

D 25'-#4 CU
D 50'-#1 CU
D 75'-#2/0 CU
> 75'-#3/0 CU

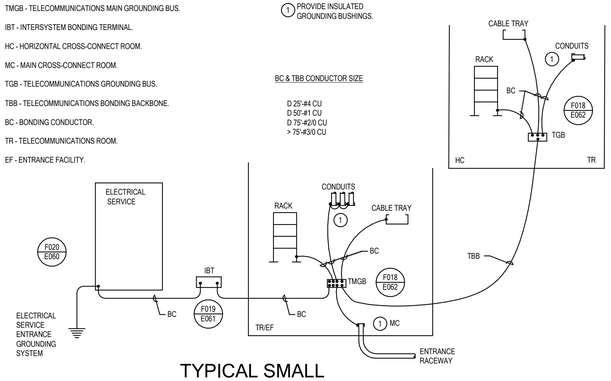

DIAGRAM F022 TYPICAL SMALL TELECOMMUNICATIONS SYSTEM GROUNDING/BONDING
NTS

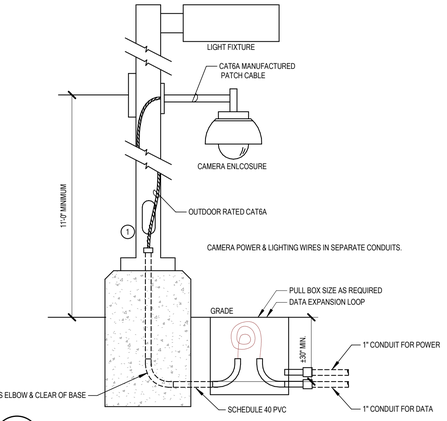

DIAGRAM EY430 CAMERA/LIGHT POLE
NTS

DIAGRAM NOTE:

PROVIDE A 3/4" CONDUIT FROM MANUFACTURER'S SUGGESTED J-BOX TO ACCESSIBLE CEILING SPACE. PROVIDE SPECIFIED CABLE RACEWAY TO ROUTE CABLING TO DESIGNATED EQUIPMENT RACK WITH CABLE SERVICE LOOPS ON EACH END.

DIAGRAM EY401 TYPICAL CAMERA MOUNTING
NTS

100 PERCENT SET

blu line designs
planning | landscape architecture | design
8719 S. Sandy Parkway
Sandy, UT 84070
p 801.679.3157

CLIENT
FARMINGTON CITY
CONTACT: SYLVIA CLARK
PH: 801.939.9295
EMAIL: SCLARK@FARMINGTON.UTAH.GOV

FARMINGTON

BNA CONSULTING
4225 Lake Park Blvd, Suite 275
West Valley City, UT 84120
P: 801.532.2196
F: 801.532.2305
SALT LAKE ST. GEORGE
www.bnaconsulting.com

IVY ACRES PARK

1397 WEST COOK LANE
FARMINGTON, UTAH

REVISIONS

NO.	APPROVAL	DESCRIPTION

Stamp

PROFESSIONAL ENGINEER
BRIAN HICKS
No. 7706037
STATE OF UTAH

Designed By:	AS
Drawn By:	AS
Date:	02.23.2024
Checked By:	RB
Project No:	22-246

Drawing Title

SYSTEMS DIAGRAMS

Drawing number

E063

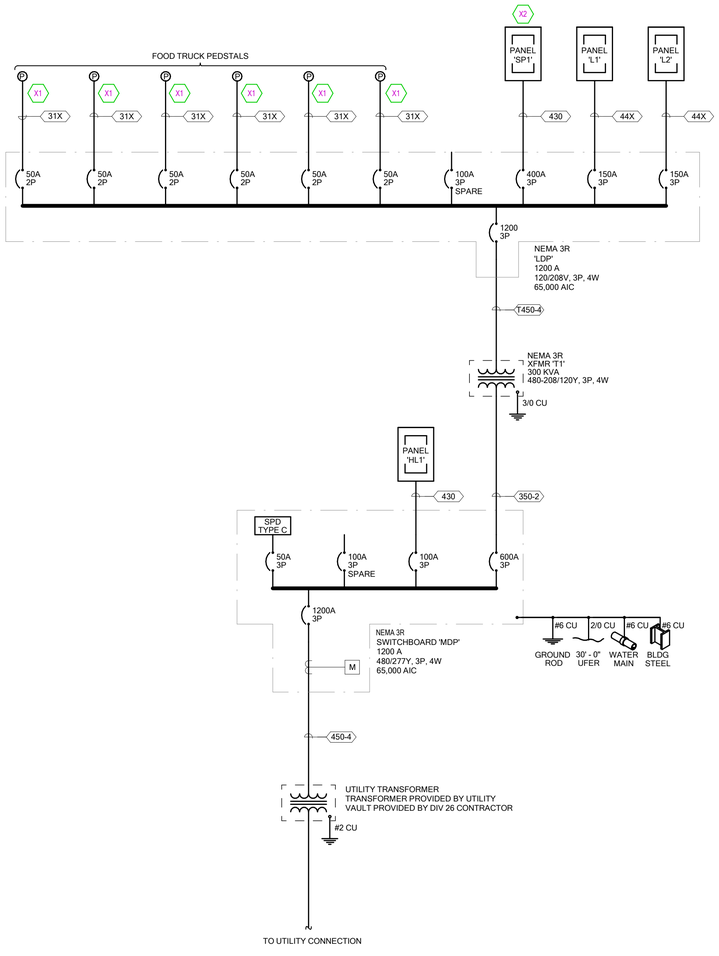

1 ONE-LINE DIAGRAM

ALUMINUM CONDUCTOR & O.C. PROT. FOR TRANSFORMER PRIMARY

ALUMINUM XHHW-2 CONDUCTOR & O.C. PROT. FOR TRANSFORMER SECONDARY △ 480-208/120 Y

TRANS KVA	O.C. PROT.	TYPE COND.*	GEC (1)	MIN. Z%	O.C. PROT.	TYPE COND.*	COND. AMPS	SETS	CONDUCTOR (3) QUAN.	CONDUCTOR (3) SIZE	CONDUIT SIZE	BONDING JUMPER (2)
15	30	30	8 CU	3	60	T44-1	70	1	4	4 CU	1-1/2"	8 CU
30	50	36	8 CU	3	100	T41X-1	120	1	4	1/0	2"	8 CU
45	70	34	4 CU	3	175	T44X-1	180	1	4	4/0	2-1/2"	4 CU
75	125	32X	2 CU	3	225	T435-1	250	1	4	350	3"	1/0 AL
112.5	175	34X	2 CU	4	400	T425-2	410	2	4	250	3"	1/0 AL
150	300	350	2/0 CU	4	600	T450-2	620	2	4	500	4"	4/0 AL
225	400	375	2/0 CU	4	800	T440-3	810	3	4	400	4"	4/0 AL
300	600	350-2	3/0 CU	5	1200	T450-4	1240	4	4	500	4"	250 AL
500	800	340-3	3/0 CU	5	1600	T440-6	1620	6	4	400	4"	300 AL
750	1200	350-4	3/0 CU	5	3000	T450-10	3100	10	4	500	4"	750 AL

ALUMINUM CONDUCTOR & O.C. PROT. FOR TRANSFORMER PRIMARY

ALUMINUM XHHW-2 CONDUCTOR & O.C. PROT. FOR TRANSFORMER SECONDARY (200% NEUTRAL) △480-208/120 Y

TRANS KVA	O.C. PROT.	TYPE COND.*	GEC (1)	MIN. Z%	O.C. PROT.	TYPE COND.*	COND. AMPS	SETS	CONDUCTOR (3) QUAN.	CONDUCTOR (3) SIZE	CONDUIT SIZE	BONDING JUMPER (2)
15	30	30	8 CU	3	60	T53-1	53	1	5	3 CU	2"	8 CU
30	50	36	6 CU	3	100	T52X-1	108	1	5	2/0	2-1/2"	6 CU
45	70	34	2 CU	3	175	T530-1	184	1	5	300	3"	1/0 AL
75	125	32X	2 CU	3	225	T550-1	248	1	5	500	4"	1/0 AL
112.5	175	34X	1/0 CU	4	400	T535-2	400	2	5	350	3"	3/0 AL
150	300	350	2/0 CU	4	600	T535-3	600	3	5	350	4"	4/0 AL
225	400	375	2/0 CU	4	800	T535-4	800	4	5	350	4"	4/0 AL
300	600	350-2	3/0 CU	5	1200	T550-5	1240	5	5	500	4"	350 AL
500	800	340-3	3/0 CU	5	1600	T550-7	1736	7	5	500	4"	500 AL
750	1200	350-4	3/0 CU	5	3000	T575-10	3080	10	5	750	4"	750 AL

* SEE SCHEDULE FOR CONDUIT AND WIRE SIZE

NOTES:

1. GROUNDING ELECTRODE CONDUCTOR. (NEC 250.66)
2. SUPPLY SIDE BONDING JUMPER. (NEC 250.102 (C)(1))
3. XHHW INSULATION.

SHEET KEYNOTES

X1	PROVIDE MIDWEST UNMETERED RV PEDESTAL #U075CP4010 (OR APPROVED EQUAL) WITH 50A, 30A, AND 20A BREAKERS AND RECEPTACLES. PROVIDE SUBMITTAL PRIOR TO ORDERING. COORDINATE EXACT LOCATION PRIOR TO ROUGH-IN.
X2	ELECTRICAL PANELS INSTALLED IN THE POOL EQUIPMENT ROOM. SHALL MEET CORROSION RESISTANCE REQUIRMENTS OF NEC 2020 ARTICLE 680.14, I.E. BE NEMA-4X RATED.

ALUMINUM CONDUCTOR & CONDUIT SCHEDULE

TYPE	AMP.	COND. SIZE	CONDUCTOR QUAN.	CONDUCTOR SIZE	INSULATION	EQ. GND COND.(AL)
31X	120	2"	3	1/0	XHHW-2	4
41X	120	2"	4	1/0	XHHW-2	4
51X	96	2"	5*	1/0	XHHW-2	4
32X	135	2"	3	2/0	XHHW-2	4
42X	135	2"	4	2/0	XHHW-2	4
52X	108	2"	5*	2/0	XHHW-2	4
33X	155	2"	3	3/0	XHHW-2	4
43X	155	2"	4	3/0	XHHW-2	4
53X	124	3"	5*	3/0	XHHW-2	4
34X	180	2"	3	4/0	XHHW-2	4
44X	180	3"	4	4/0	XHHW-2	4
54X	144	3"	5*	4/0	XHHW-2	2
325	205	2"	3	250	XHHW-2	2
425	205	3"	4	250	XHHW-2	2
525	164	3"	5*	250	XHHW-2	2
330	230	3"	3	300	XHHW-2	2
430	230	3"	4	300	XHHW-2	2
530	184	3"	5*	300	XHHW-2	2
335	250	3"	3	350	XHHW-2	2
435	250	3"	4	350	XHHW-2	2
535	200	3"	5*	350	XHHW-2	2
340	270	3"	3	400	XHHW-2	2
440	270	3"	4	400	XHHW-2	2
540	216	3"	5*	400	XHHW-2	2
350	310	4"	3	500	XHHW-2	1
450	310	4"	4	500	XHHW-2	1
550	248	4"	5*	500	XHHW-2	1
375	385	4"	3	750	XHHW-2	1
475	385	4"	4	750	XHHW-2	1
575	308	4"	5*	750	XHHW-2	1

ALUMINUM CONDUCTOR & CONDUIT SCHEDULE FOR PARALLEL RUNS

TYPE	MAX. O.C. PROT.	COND. AMPS	SETS	CONDUCTOR QUAN.	CONDUCTOR SIZE	CONDUIT SIZE	EQ. GND. COND.(AL)
325-2	400	410	2	3	250	2-1/2"	2/0
425-2	400	410	2	4	250	2-1/2"	2/0
535-2	400	400	2	5*	350	3"	2/0
350-2	600	620	2	3	500	3"	2/0
450-2	600	620	2	4	500	3"	2/0
535-3	600	600	3	5*	350	3"	2/0
340-3	800	810	3	3	400	2-1/2"	3/0
440-3	800	810	3	4	400	3"	3/0
535-4	800	800	4	5*	350	4"	3/0
375-3	1000	1155	3	3	750	4"	4/0
475-3	1000	1155	3	4	750	4"	4/0
535-5	1000	1000	5	5*	350	4"	4/0
350-4	1200	1240	4	3	500	4"	250
450-4	1200	1240	4	4	500	4"	250
550-5	1200	1240	5	5*	500	4"	250
340-6	1600	1620	6	3	400	4"	350
440-6	1600	1620	6	4	400	4"	350
550-7	1600	1736	7	5*	500	4"	350
475-6	2000	2310	6	4	750	4"	400
475-7	2500	2695	7	4	750	5"	600
475-8	3000	3080	8	4	750	5"	600
475-11	4000	4235	11	4	750	5"	750

NOTES:
IN PARALLEL RUNS SIZE GND. COND. IN ACCORDANCE WITH NEC PARA. 250-122.

GND. CONDUCTOR MAY BE DELETED ON SERVICE ENTRANCE CONDUCTORS

* 200% NEUTRAL, DERATED TO 80% BASED ON NEC 310.15.B(5)(C)

** COPPER CONDUCTOR (XHHW)

PROVIDE COMPACT STRANDED ALUMINUM ASSOCIATION 8000 SERIES ALLOY CONDUCTORS.

PROVIDE TERMINATION FOR ALUMINUM ALLOY CONDUCTORS OF HYDRAULIC COMPRESSION TYPE ONLY, LISTED UNDER UL 486-B, MARKED "AL7CU" FOR 75 DEGREE RATED CIRCUITS.

PROVIDE ALL ELECTRICAL EQUIPMENT WITH PROPER SIZING TO ACCOMMODATE ALUMINUM CONDUCTORS. COORDINATE WITH EQUIPMENT SUPPLIER.

100 PERCENT SET

blu line designs
planning | landscape architecture | design
8719 S. Sandy Parkway
Sandy, UT 84070
p 801.679.3157

CLIENT
FARMINGTON CITY
CONTACT: SYLVIA CLARK
PH: 801.939.9295
EMAIL:
SCLARK@FARMINGTON.UTAH.GOV

FARMINGTON

BNA CONSULTING
4225 Lake Park Blvd, Suite 275
West Valley City, UT 84120
P: 801.532.2196
F: 801.532.2305
www.bnaconsulting.com
SALT LAKE ST. GEORGE

IVY ACRES PARK

1397 WEST COOK LANE
FARMINGTON, UTAH

REVISIONS

NO.	symmetry	DESCRIPTION

Stamp

PROFESSIONAL ENGINEER
BRIAN HICKS
No. 7709037
STATE OF UTAH

Designed By:	AS
Drawn By:	AS
Date:	02.23.2024
Checked By:	RB
Project No:	22-246

Drawing Title
ONE-LINE DIAGRAM

Drawing number
E080

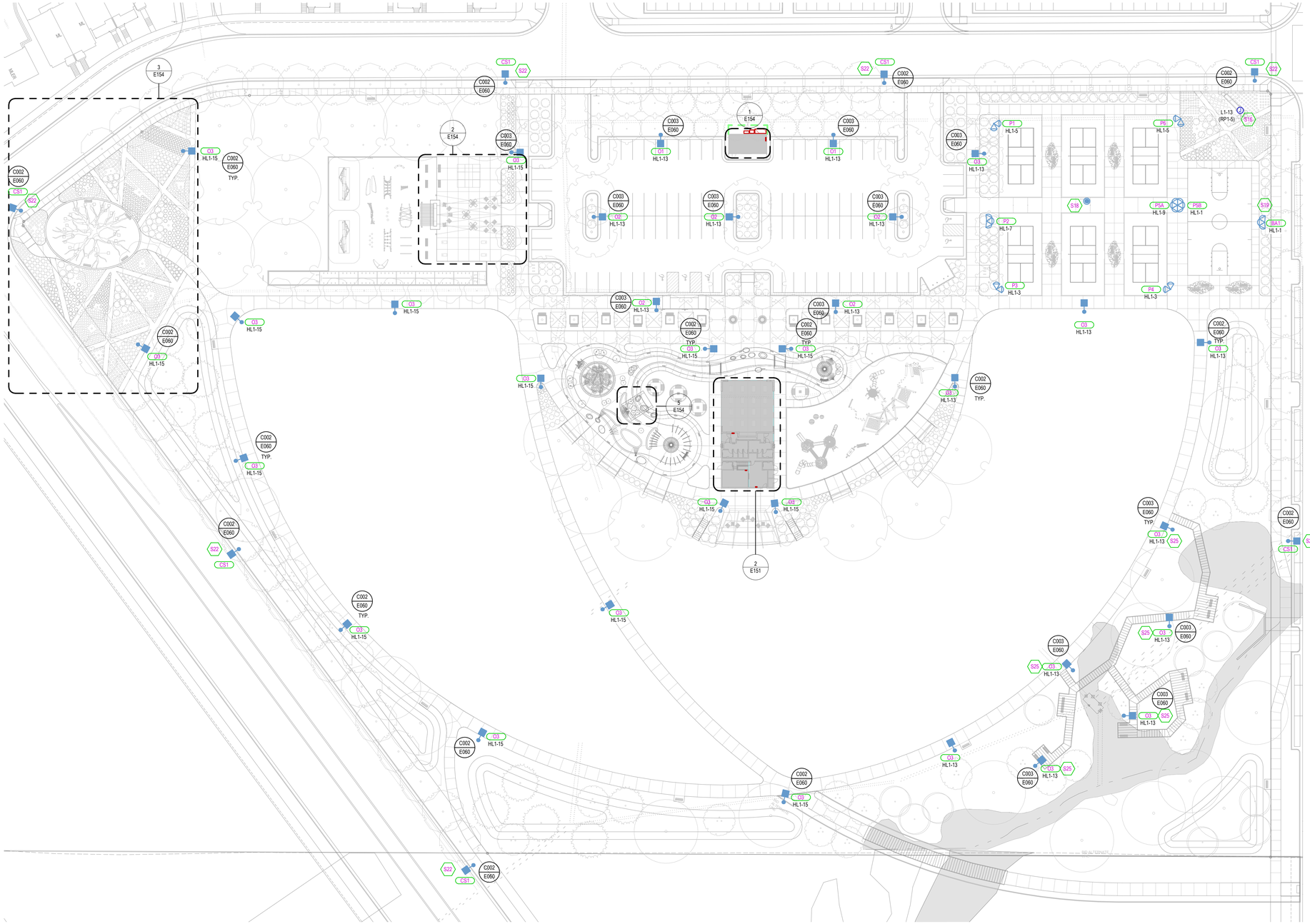

OVERALL LIGHTING SITE PLAN
SCALE = 1" = 40'-0"

ELECTRICAL SITE UTILITY COORDINATION

ELECTRICAL SITE UTILITY INFORMATION HAS BEEN COORDINATED WITH THE FOLLOWING UTILITY COMPANY REPRESENTATIVES. VERIFY ALL LOCATIONS, DIMENSIONS, CLEARANCES, REGULATIONS, ETC., PRIOR TO INSTALLATION. NOTIFY ENGINEER OF ANY REVISIONS REQUIRED.

POWER COMPANY	Rocky Mountain Power
CONTACT	Craig Bruestle
PHONE NO.	801-543-3032
EMAIL	Craig.Bruestle@rockymountainpower.net
WORK ORDER NO.	7108978
TELEPHONE COMPANY	ALLWEST
CONTACT	RYAN MCNEIL
PHONE NO.	435-783-4949
EMAIL	ryan.mcnail@allwest.com

SHEET KEYNOTES

S16	POWER AND CONTROL RELAY FOR MONUMENT SIGN. COORDINATE REQUIREMENTS WITH MANUFACTURER PRIOR TO ROUGH-IN.
S18	8' POLE WITH PICKLEBALL COURT LIGHTING CONTROL PUSHBUTTON AND WARNING LIGHT PROVIDED BY COURT LIGHTING MANUFACTURER. COORDINATE ALL WIRING REQUIREMENTS WITH MANUFACTURER PRIOR TO ROUGH-IN.
S19	BASKETBALL COURT LIGHTING CONTROL PUSHBUTTON AND WARNING LIGHT PROVIDED BY COURT LIGHTING MANUFACTURER AND MOUNTED ON COURT LIGHTING POLE. COORDINATE WIRING REQUIREMENTS WITH MANUFACTURER PRIOR TO ROUGH-IN.
S22	CITY STREET LIGHT TYPE CS1 TO BE PROVIDED BY THE CITY STREET LIGHTING CONTRACTOR BLACK & McDONALD. BLACK & McDONALD SHALL PURCHASE THE POLES AND FIXTURES, INSTALL POLE BASES, PROVIDE TRENCHNG, CONDUIT AND WIRE. BLACK & McDONALD SHALL COORDINATE POWER CONNECTIONS AND METERING REQUIREMENTS WITH ROCKY MOUNTAIN POWER. FOR COORDINATION THE CONTACT AT BLACK & McDONALD IS WADE LONG, #801-381-9654.
S25	TOP OF POLE BASE TO BE LEVEL WITH BOARD WALK. COORDINATE FINAL HEIGHT WITH CIVIL ENGINEER AND LANDSCAPE ARCHITECT PRIOR TO ROUGH-IN.

blu line designs
planning | landscape architecture | design
8719 S. Sandy Parkway
Sandy, UT 84070
p 801.679.3157

CLIENT

FARMINGTON CITY
CONTACT: SYLVIA CLARK
PH: 801.939.9295
EMAIL:
SCLARK@FARMINGTON.UTAH.GOV

FARMINGTON

BNA CONSULTING
4225 Lake Park Blvd, Suite 275
West Valley City, UT 84120
P: 801.532.2196
F: 801.532.2305
www.bnaconsulting.com
SALT LAKE ST. GEORGE

IVY ACRES PARK

1397 WEST COOK LANE
FARMINGTON, UTAH

REVISIONS

NO.	APPROVED	DESCRIPTION

Stamp

PROFESSIONAL ENGINEER
BRIAN HICKS
No. 7709037[illegible]
STATE OF UTAH

Designed By:	AS
Drawn By:	AS
Date:	02.23.2024
Checked By:	RB
Project No:	22-246

Drawing Title

OVERALLL LIGHTING SITE PLAN

100 PERCENT SET

Drawing number

E101

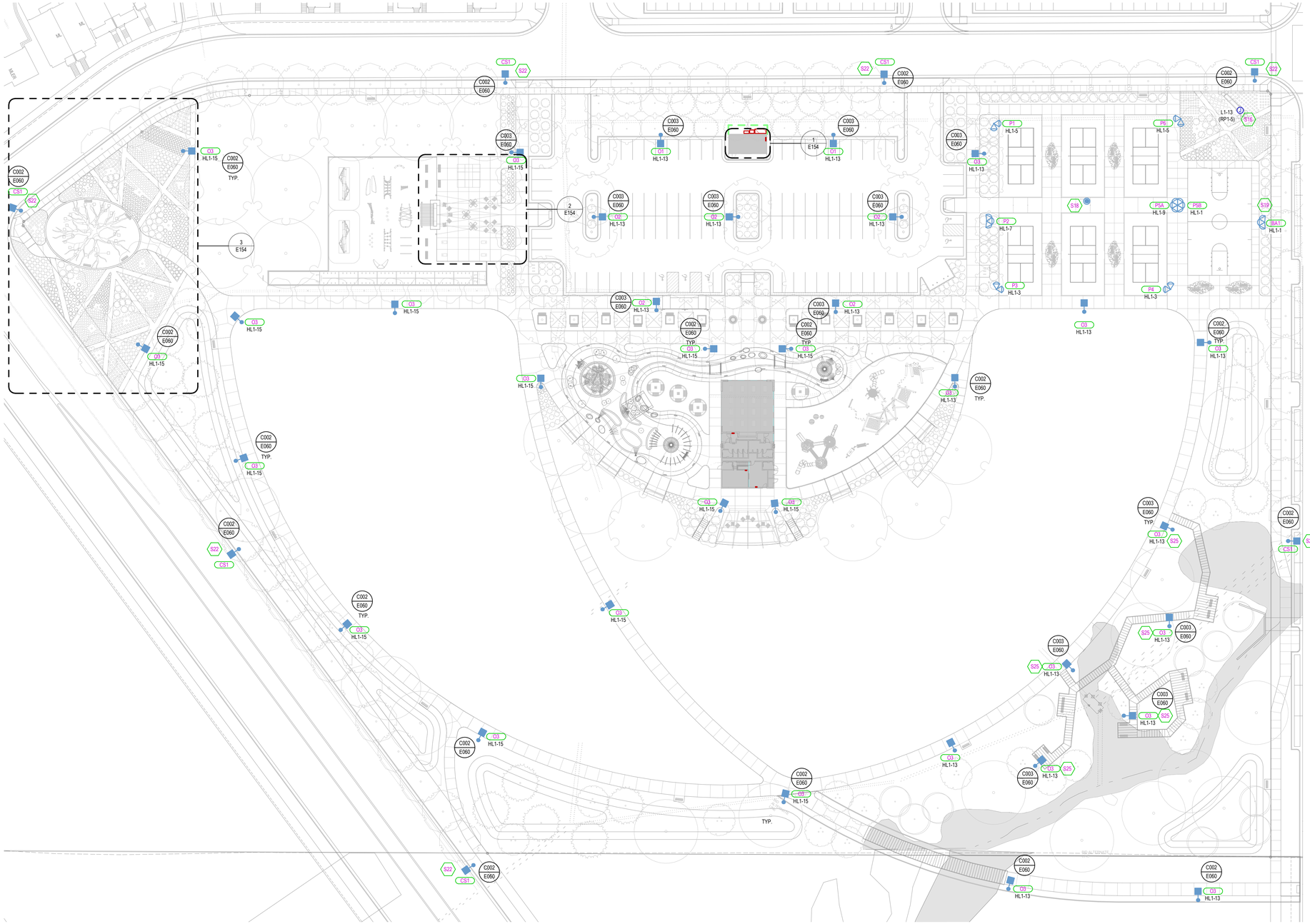

OVERALL LIGHTING SITE PLAN ALT

SCALE = 1" = 40'-0"

ELECTRICAL SITE UTILITY COORDINATION

ELECTRICAL SITE UTILITY INFORMATION HAS BEEN COORDINATED WITH THE FOLLOWING UTILITY COMPANY REPRESENTATIVES. VERIFY ALL LOCATIONS, DIMENSIONS, CLEARANCES, REGULATIONS, ETC., PRIOR TO INSTALLATION. NOTIFY ENGINEER OF ANY REVISIONS REQUIRED.

POWER COMPANY	Rocky Mountain Power
CONTACT	Craig Bruestle
PHONE NO.	801-543-3032
EMAIL	Craig.Bruestle@rockymountainpower.net
WORK ORDER NO.	7108978
TELEPHONE COMPANY	ALLWEST
CONTACT	RYAN MCNEIL
PHONE NO.	435-783-4949
EMAIL	ryan.mcnail@allwest.com

SHEET KEYNOTES

S16	POWER AND CONTROL RELAY FOR MONUMENT SIGN. COORDINATE REQUIREMENTS WITH MANUFACTURER PRIOR TO ROUGH-IN.
S18	8' POLE WITH PICKLEBALL COURT LIGHTING CONTROL PUSHBUTTON AND WARNING LIGHT PROVIDED BY COURT LIGHTING MANUFACTURER. COORDINATE ALL WIRING REQUIREMENTS WITH MANUFACTURER PRIOR TO ROUGH-IN.
S19	BASKETBALL COURT LIGHTING CONTROL PUSHBUTTON AND WARNING LIGHT PROVIDED BY COURT LIGHTING MANUFACTURER AND MOUNTED ON COURT LIGHTING POLE. COORDINATE WIRING REQUIREMENTS WITH MANUFACTURER PRIOR TO ROUGH-IN.
S22	CITY STREET LIGHT TYPE CS1 TO BE PROVIDED BY THE CITY STREET LIGHTING CONTRACTOR BLACK & McDONALD. BLACK & McDONALD SHALL PURCHASE THE POLES AND FIXTURES, INSTALL POLE BASES, PROVIDE TRENCHNG, CONDUIT AND WIRE. BLACK & McDONALD SHALL COORDINATE POWER CONNECTIONS AND METERING REQUIREMENTS WITH ROCKY MOUNTAIN POWER. FOR COORDINATION THE CONTACT AT BLACK & McDONALD IS WADE LONG, #801-381-9654.
S25	TOP OF POLE BASE TO BE LEVEL WITH BOARD WALK. COORDINATE FINAL HEIGHT WITH CIVIL ENGINEER AND LANDSCAPE ARCHITECT PRIOR TO ROUGH-IN.

blu line designs
planning | landscape architecture | design
8719 S. Sandy Parkway
Sandy, UT 84070
p 801.679.3157

CLIENT

FARMINGTON CITY
CONTACT: SYLVIA CLARK
PH: 801.939.9295
EMAIL:
SCLARK@FARMINGTON.UTAH.GOV

FARMINGTON

BNA CONSULTING
4225 Lake Park Blvd, Suite 275
West Valley City, UT 84120
P: 801.532.2196
F: 801.532.2305
www.bnaconsulting.com

IVY ACRES PARK

1397 WEST COOK LANE
FARMINGTON, UTAH

REVISIONS

NO.	APPROVED	DESCRIPTION

Stamp

PROFESSIONAL ENGINEER
BRIAN HICKS
No. 7709035
STATE OF UTAH

Designed By:	AS
Drawn By:	AS
Date:	02.23.2024
Checked By:	RB
Project No:	22-246

Drawing Title

OVERALL LIGHTING SITE PLAN

Drawing number

E101.ALT

100 PERCENT SET

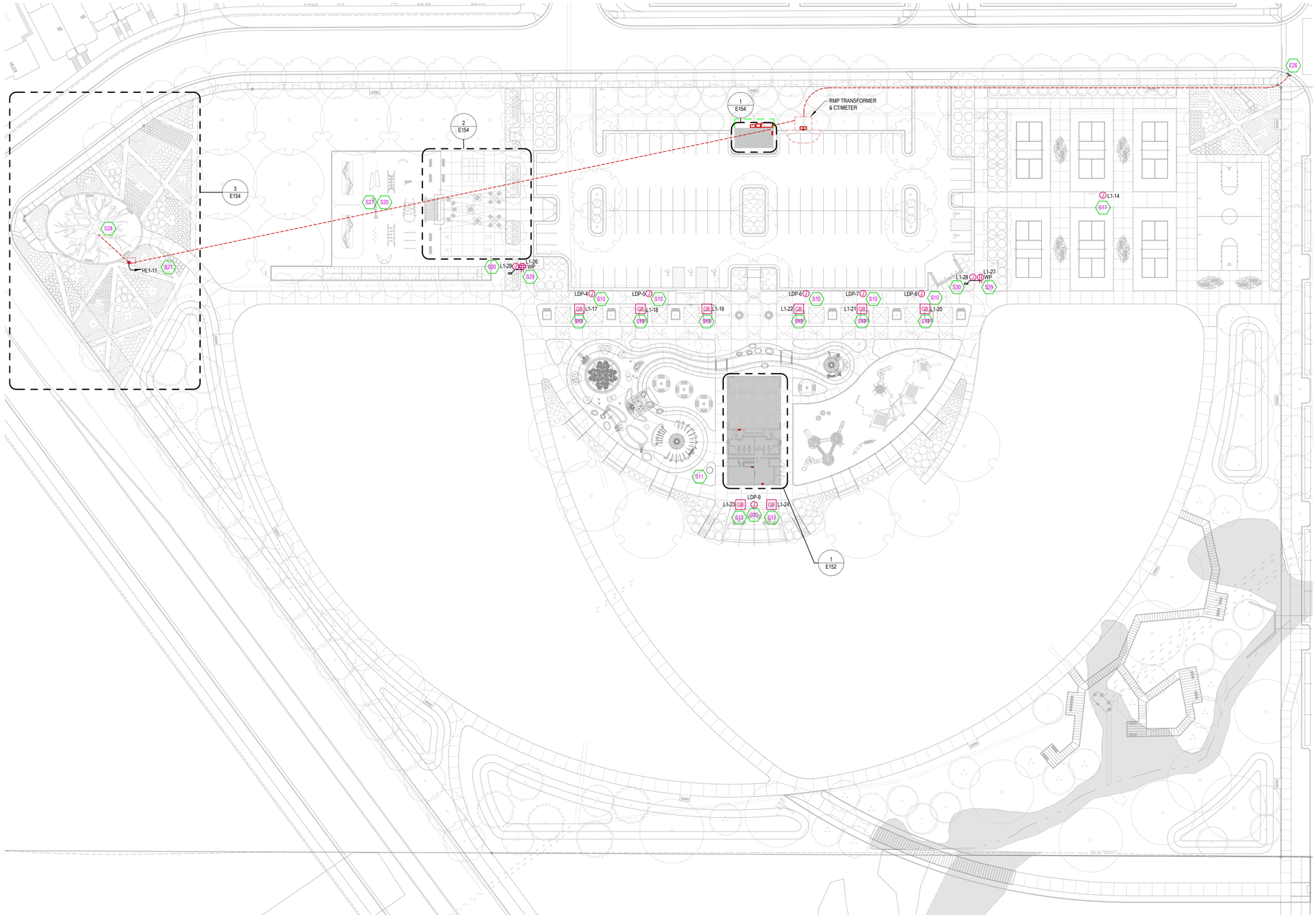

OVERALL POWER SITE PLAN
SCALE = 1" = 40'-0"

ELECTRICAL SITE UTILITY COORDINATION

ELECTRICAL SITE UTILITY INFORMATION HAS BEEN COORDINATED WITH THE FOLLOWING UTILITY COMPANY REPRESENTATIVES. VERIFY ALL LOCATIONS, DIMENSIONS, CLEARANCES, REGULATIONS, ETC., PRIOR TO INSTALLATION. NOTIFY ENGINEER OF ANY REVISIONS REQUIRED.

POWER COMPANY	Rocky Mountain Power
CONTACT	Craig Bruestle
PHONE NO.	801-543-3032
EMAIL	Craig.Bruestle@rockymountainpower.net
WORK ORDER NO.	7108978
TELEPHONE COMPANY	ALLWEST
CONTACT	RYAN MCNEIL
PHONE NO.	435-783-4949
EMAIL	ryan.mcnail@allwest.com

SHEET KEYNOTES

E26	PROVIDE TRENCHING AND CONDUITS FOR ROCKY MOUNTAIN POWER PRIMARY POWER. COORDINATE WITH RMP PRIOR TO ROUGH-IN.
S10	PROVIDE MIDWEST UNMETERED RV PEDESTAL #U075CP4010 (OR APPROVED EQUAL) WITH 50A, 30A, AND 20A BREAKERS AND RECEPTACLES. PROVIDE SUBMITTAL PRIOR TO ORDERING. COORDINATE EXACT LOCATION PRIOR TO ROUGH-IN.
S11	LOCATION TO BE COORDINATED AND PROVIDED BY CIVIL. CONDUIT AND FEEDERS SHELL BE RUN BY E.C. POWER TO BE PROVIDED TO GRINDER PUMP THROUGH ALARM PANEL. COORDINATE WITH MANUFACTURER'S SHOP DRAWINGS AND INSTILATION INSTRUCTIONS PRIOR
S13	PROVIDE LEGRAND WIREMOLD OUTDOOR GROUND BOX (XB814C51SCBA).
S17	PROVIDE LANDSCAPE FORMS (BM-PP-1G1U-SCBA)
S20	PROVIDE 3/4 INCH CONDUIT AND #22 TWISTED SHIELDED (BELDEN #9841) FROM STICK CONTROLLER TO DIN SPLITTERS. COORDINATE WITH MANUFACTURERS SHOP DRAWINGS.
S21	PROVIDE DC TRANSFORMER(EXPS-15V) FOR DMX/RDM SPLITTER (DIN RDS4) EQUIMENT. COORDINATE WITH MANUFACTURER SHOP DRAWINGS.
S27	PROVIDE (1) 1 INCH CONDUIT AND POWER TO FEED DIM SPLITTERS AND TREE MONUMENT LIGHTING.
S28	PROVIDE (1) 1 INCH CONDUIT WITH MC CABLE AND #22 TWITED SHIELDED (BELDEN #9841) FROM HOFFMEN ENCLOSURE TO TREE MONUMENT LIGHTING.
S29	PROVIDE POWER FOR FOURPLEX OUTLET IN UNIT AS NOTED ON E103.
S30	PROVIDE POWER FOR CHATSWORTH ENCLOSURE AS NOTED ON E103

blu line designs
planning | landscape architecture | design
8719 S. Sandy Parkway
Sandy, UT 84070
p 801.679.3157

CLIENT

FARMINGTON CITY
CONTACT: SYLVIA CLARK
PH: 801.939.9295
EMAIL:
SCLARK@FARMINGTON.UTAH.GOV

FARMINGTON

BNA CONSULTING
4225 Lake Park Blvd, Suite 275
West Valley City, UT 84120
P: 801.532.2196
F: 801.532.2305
www.bnaconsulting.com
SALT LAKE ST. GEORGE

100 PERCENT SET

IVY ACRES PARK

1397 WEST COOK LANE
FARMINGTON, UTAH

REVISIONS

NO.	MM/DD/YY	DESCRIPTION

Stamp

PROFESSIONAL ENGINEER
BRIAN HICKS
No. 7709037
STATE OF UTAH

Designed By:	AS
Drawn By:	AS
Date:	02.23.2024
Checked By:	RB
Project No:	22-246

Drawing Title

OVERALL ELECTRICAL SITE PLAN

Drawing number

E102

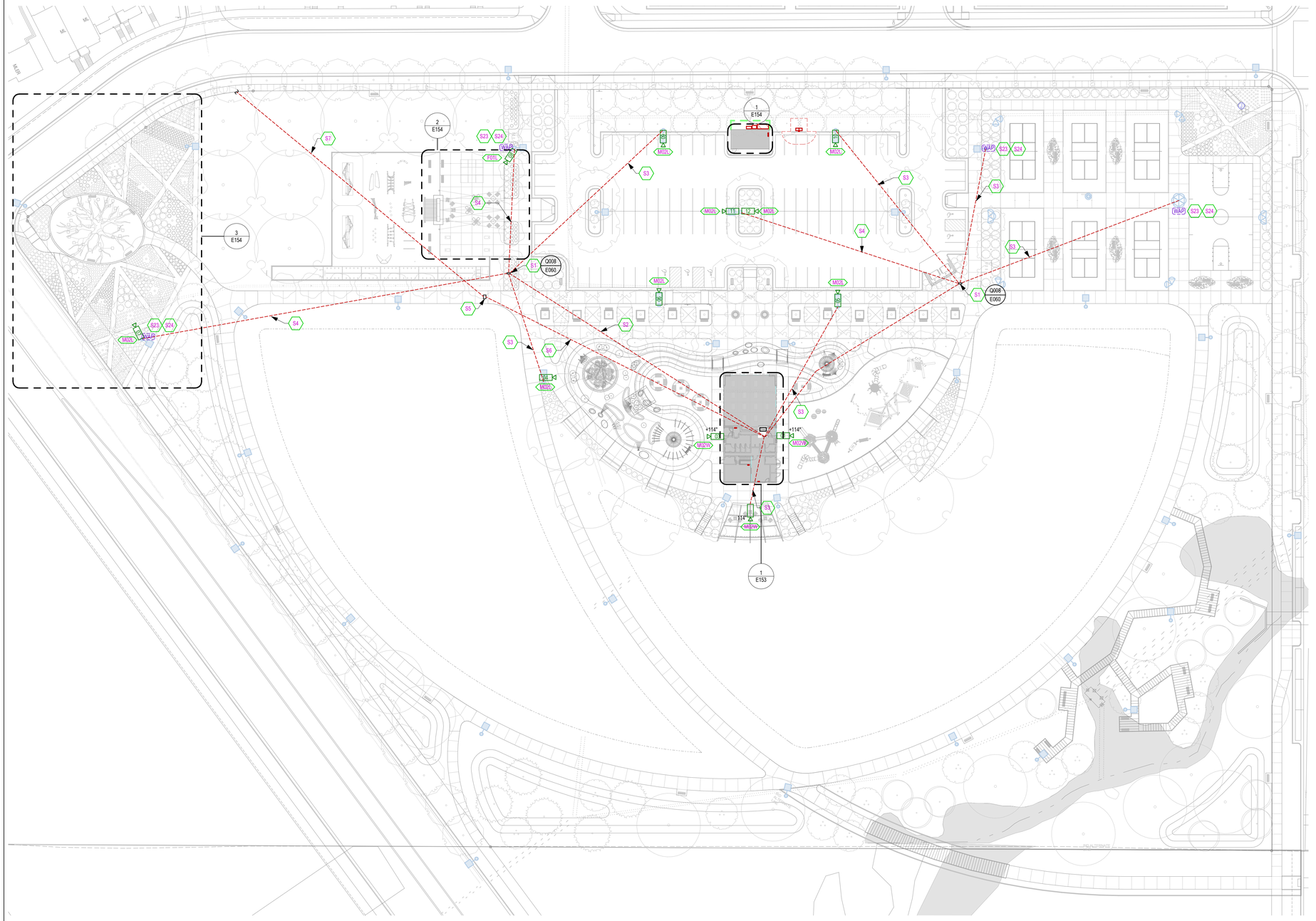
2
E154
3
E154
1
E154
1
E153
S7
S23
S24
WAP
FOTL
S4
S1
Q008
E060
S5
S2
S3
S6
M02L
M02K
M02V
+114'
I11
I2
I8
WAP
S23
S24
S3
S4
S1
Q008
E060
S3
S2
S4
S3
S3
S3

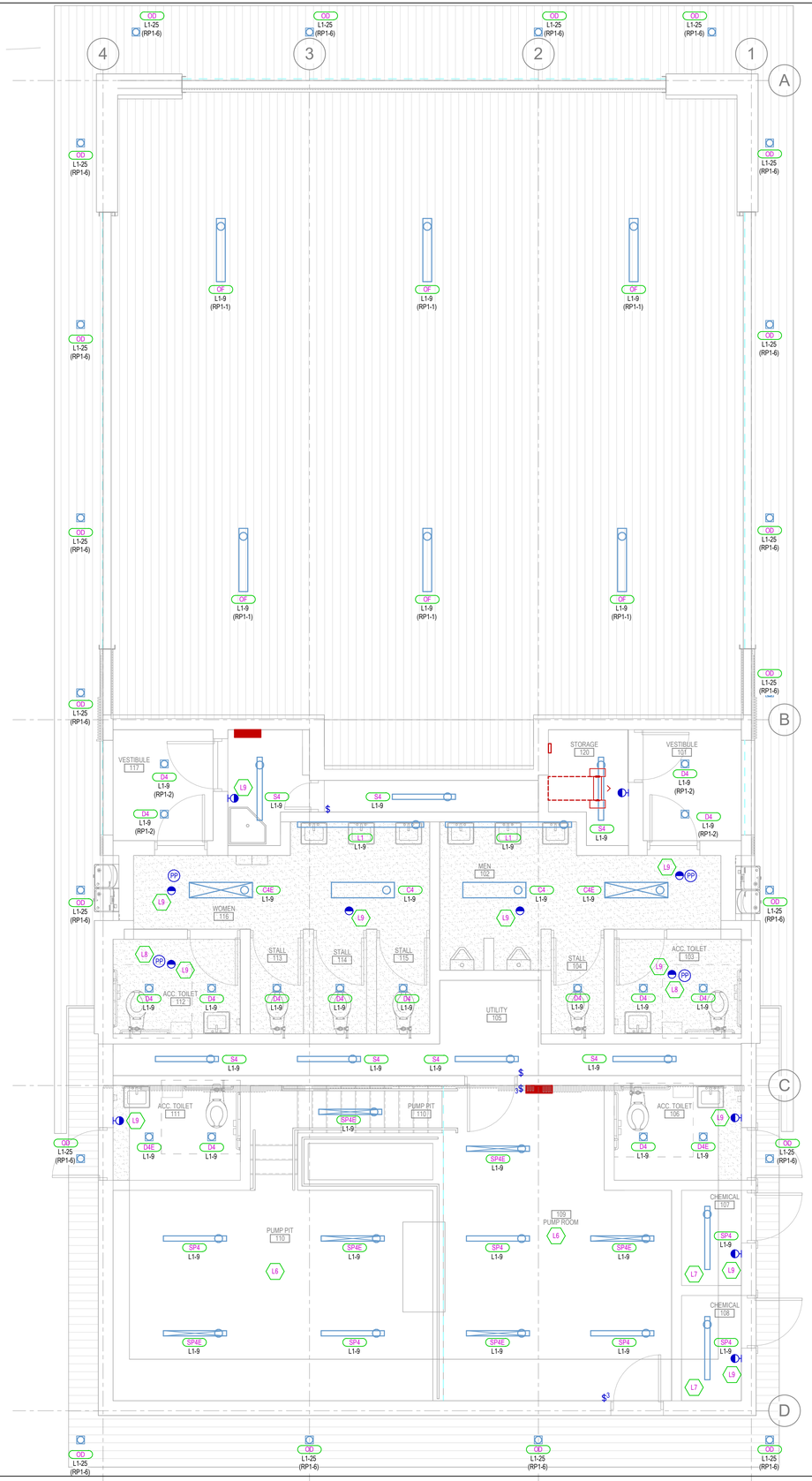

RESTROOM/PAVILION LIGHTING PLAN
SCALE = 1/4" = 1'-0"

LIGHTING GENERAL SHEET NOTES

1. REFER TO ARCHITECTURAL REFLECTED CEILING PLANS FOR ALL FIXTURE LOCATIONS WITHIN A CEILING OR CEILING GRID. FOR AREAS WITHOUT CEILINGS, FIXTURE LOCATIONS ARE DIAGRAMMATIC. THE INTENT IS TO ALIGN, CENTER, OR SPACE FIXTURES BETWEEN ARCHITECTURAL AND STRUCTURAL ELEMENTS. COORDINATE WITH PAINTING CONTRACTOR FOR PAINTING OF EXPOSED RACEWAY.
2. FIELD VERIFY EXACT FIXTURE LENGTHS FOR CONTINUOUS ILLUMINATION FOR COVES AND LINEAR RUNS. PROVIDE CONTINUOUS ILLUMINATION WITH NO MORE THAN A 1" GAP BETWEEN THE END OF THE EDGE OF THE WALL / CEILING AND THE FIXTURE.
3. ELECTRICAL CONTRACTOR TO COORDINATE WITH MECHANICAL CONTRACTOR FOR PLACEMENT OF FIXTURES WITHIN MECHANICAL ROOMS.
4. ALL ROOM CONTROLLERS AND/OR POWER PACKS SHALL BE INSTALLED IN THE CEILING SPACE DIRECTLY ABOVE THE ENTRY DOOR TO THE SPACE IT IS CONTROLLING.
5. ALL UNDERCABINET LIGHTS MUST BE COORDINATED WITH MILLWORK FOR EXACT LENGTHS. ALL UNDERCABINET LIGHTS SHALL BE COORDINATED WITH MILLWORK SHOP DRAWINGS.
6. PROVIDE 0-10V DIMMING CONDUCTORS FOR ALL AREAS AND/OR ROOMS WHERE 0-10V DIMMING IS INDICATED BY THE RELAY PANEL SCHEDULE AND/OR WALL STATION CONTROL SEQUENCE.
7. SUBSCRIPT ADJACENT TO LIGHT FIXTURE INDICATES CONTROLS, PROVIDE LIGHTING CONTROLS WITH THE REQUIRED NUMBER OF RELAY/DIMMERS. PROVIDE ADDITIONAL RELAY/DIMMERS FOR DAYLIGHT ZONES AS REQUIRED.

SHEET KEYNOTES

L6	FIXTURE LAYOUT IS DIAGRAMMATIC. COORDINATE MOUNTING OF FIXTURES WITH PIPING, EQUIPMENT, ETC. TO AVOID OBSTRUCTION OF ILLUMINATION.
L7	WIRING METHODS IN CORROSIVE ENVIRONMENTS SHALL BE LISTED AND IDENTIFIED FOR USE IN SUCH AREAS PER NEC 680. 14.
L8	PROVIDE DUAL TECH CEILING SENSOR AND 2-POLE POWER PACK WITH 10 MINUTE TIME-OUT FUNCTION FOR CONTROL OF EXHAUST FAN.
L9	PROVIDE ULTRASONIC CEILING SENSORS.

blu line designs
planning | landscape architecture | design
8719 S. Sandy Parkway
Sandy, UT 84070
p 801.679.3157

CLIENT
FARMINGTON CITY
CONTACT: SYLVIA CLARK
PH: 801.939.9295
EMAIL:
SCLARK@FARMINGTON.UTAH.GOV

FARMINGTON

BNA CONSULTING
4225 Lake Park Blvd, Suite 275
West Valley City, UT 84120
P: 801.532.2196
F: 801.532.2305
www.bnaconsulting.com
SALT LAKE ST. GEORGE

IVY ACRES PARK

1397 WEST COOK LANE
FARMINGTON, UTAH

REVISIONS

NO.	APPROVED	DESCRIPTION

Stamp

PROFESSIONAL ENGINEER
BRIAN HICKS
No. 7590037
STATE OF UTAH

Designed By:	AS
Drawn By:	AS
Date:	02.23.2024
Checked By:	RB
Project No:	22-246

Drawing Title
RESTROOM/ PAVILION LIGHTING PLAN

Drawing number
E151

100 PERCENT SET



ROOF POWER PLAN
SCALE = 1/4" = 1'-0"

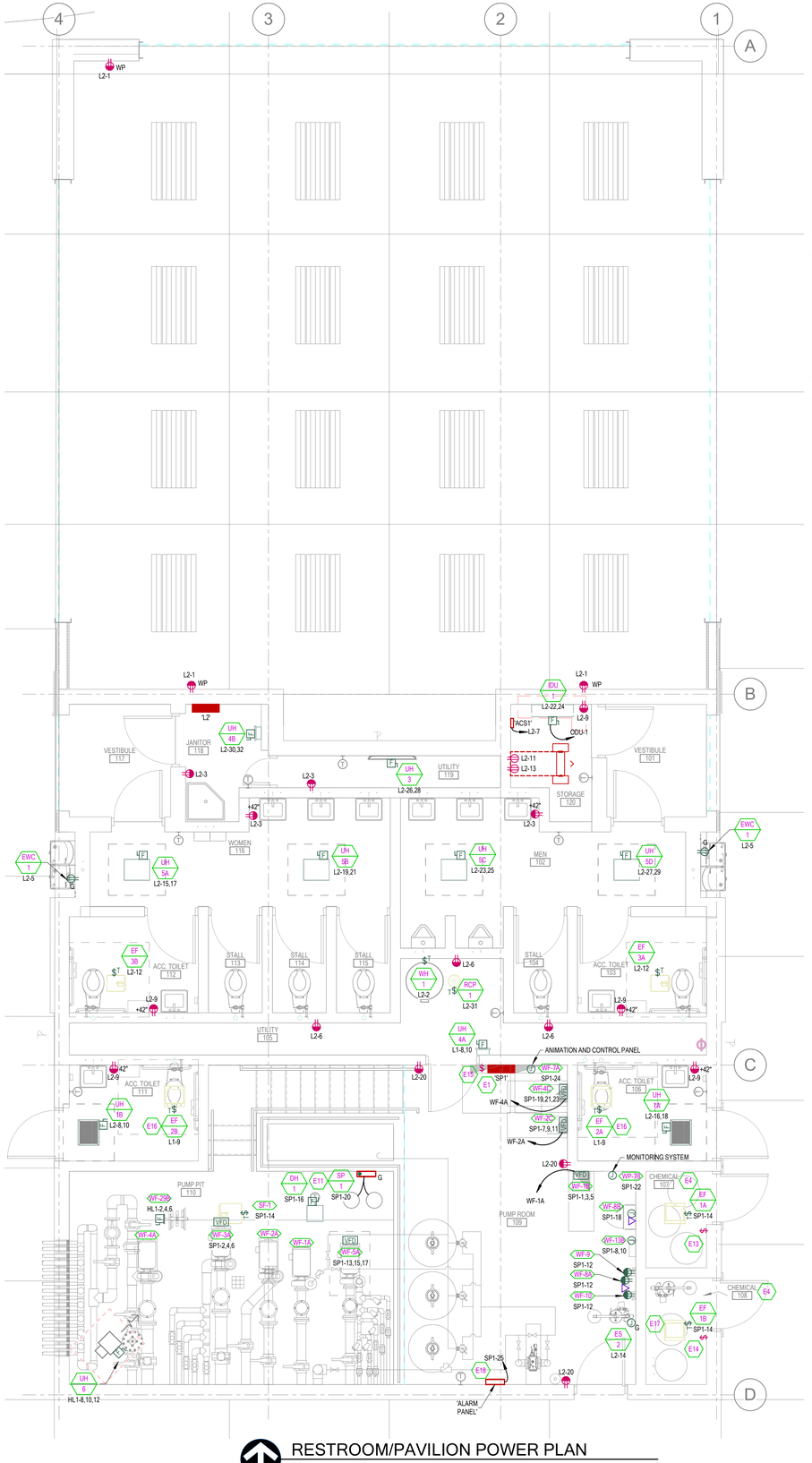

RESTROOM/PAVILION POWER PLAN
SCALE = 1/4" = 1'-0"

WATER FEATURE ELECTRICAL INTERLOCKING NOTES:

ELECTRICAL INTERLOCKING BY ELECTRICAL CONTRACTOR. COORDINATE WITH POOL CONTRACTOR.

PROVIDE INTERLOCKING OF CIRCULATION EQUIPMENT PER FEATURE DRAWINGS AND SPECIFICATIONS. PROVIDE RELAY AND CONTROL WIRING IN 3/4" CONDUIT AS REQUIRED.

1. INTERLOCK THE CIRCULATION PUMP WITH ITS RESPECTIVE CHLORINE AND ACID FEED RELAYS. (IF THE CIRCULATION PUMP SHUTS OFF, THE POWER TO ALL CHLORINE AND ACID FEEDERS SHALL SHUT OFF ALSO.) INTERLOCKING SHALL BE ACCOMPLISHED THROUGH AN ELECTRICAL INTERLOCK CONSISTING OF BOTH:
   A. FLOW METER OR FLOW SWITCH AT THE CHEMICAL CONTROLLER; AND
   B. CHEMICAL FEEDERS WIRED ELECTRICALLY TO THE CIRCULATION SYSTEM. THIS MAY INCLUDE THE USE OF A DIFFERENTIAL PRESSURE SWITCH, A PUMP POWER MONITOR, OR OTHER SUITABLE MEANS.
2. INTERLOCK THE CIRCULATION PUMP WITH THE UV DISINFECTION SYSTEM CONTROL PANEL. (IF THE CIRCULATION PUMP SHUTS OFF, THE POWER TO THE UV SYSTEM CONTROL PANEL SHALL SHUT OFF ALSO.)
3. INTERLOCK THE WATER FEATURE CONTROLLER WITH ALL FEATURE PUMPS.

POWER GENERAL SHEET NOTES

1. ELECTRICAL CONTRACTOR SHALL COORDINATE EXACT LOCATION OF ALL MECHANICAL UNITS WITH MECHANICAL CONTRACTOR.
2. CIRCUITS TO ALL MECHANICAL EQUIPMENT SHALL BE DEDICATED UNLESS NOTED OTHERWISE.
3. PROVIDE 120V CIRCUIT FROM THE NEAREST PANELBOARD FOR FIRE/SMOKE DAMPER RELAYS. PROVIDE FIRE ALARM MODULES AND RELAYS AS NECESSARY FOR ALL FIRE/SMOKE DAMPERS SHOWN ON DIVISION 23 DRAWINGS. ALL FIRE/SMOKE DAMPERS SHALL HAVE A MANUAL OVERRIDE SWITCH. PROVIDE DUCT DETECTOR WITHIN 5 FEET OF EACH FIRE/SMOKE DAMPER. REFER TO DIAGRAM D012 ON SHEET XXXX.

SHEET KEYNOTES

E1	ELECTRICAL PANELS INSTALLED IN THE POOL EQUIPMENT ROOM, SHALL MEET CORROSION RESISTANCE REQUIRMENTS OF NEC 2020 ARTICLE 680.14, I.E. BE NEMA-4X RATED.
E4	WIRING METHODS IN CORROSIVE ENVIRONMENTS SHALL BE LISTED AND IDENTIFIED FOR USE IN SUCH AREAS PER NEC 680.14.
E11	CONTROL PANEL WITH INTEGRAL DISCONNECT PROVIDED WITH SUMP PUMP. FURNISHED BY OTHERS AND INSTALLED BY ELECTRICAL CONTRACTOR. ELECTRICAL CONTRACTOR TO PROVIDE CONNECTIONS TO PUMPS IN PIT PER MANUFACTURER'S WRITTEN INSTRUCTIONS.
E13	PROVIDE SWITCH FOR EF-1A TO BYPASS THE 24/7 RUN TIME FOR ON/OFF CONTROL. LOCATE SWITCH WITHIN SAME GANGE/FACEPLATE AS LIGHT SWITCH.
E14	PROVIDE SWITCH FOR EF-1B TO BYPASS THE 24/7 RUN TIME FOR ON/OFF CONTROL. LOCATE SWITCH WITHIN SAME GANGE/FACEPLATE AS LIGHT SWITCH.
E15	PROVIDE SWITCH FOR SF-1 TO BYPASS THE 24/7 RUN TIME FOR ON/OFF CONTROL. LOCATE SWITCH WITHIN SAME GANGE/FACEPLATE AS LIGHT SWITCH.
E16	TO BE INTERLOCKED WITH LIGHTING AND PROVIDED A 10 MINUTE RUN DELAY.
E17	PRIOR TO ROUGH-IN TO COORDINATE WITH EYE WASH INTALLER.
E18	PROVIDE POWER TO ALARM PANEL FOR SEWAGE GRINDER MOTOR. COORDINATE LOCATION OF PANEL WITH GRINDER PUMP INSTALLER PRIOR TO ROUGH-IN.

blu line designs
planning | landscape architecture | design
8719 S. Sandy Parkway
Sandy, UT 84070
p 801.679.3157

CLIENT
FARMINGTON CITY
CONTACT: SYLVIA CLARK
PH: 801.939.9295
EMAIL:
SCLARK@FARMINGTON.UTAH.GOV

FARMINGTON

BNA CONSULTING
4225 Lake Park Blvd, Suite 275
West Valley City, UT 84120
P: 801.532.2196
F: 801.532.2305
www.bnaconsulting.com
SALT LAKE ST. GEORGE

IVY ACRES PARK
1397 WEST COOK LANE
FARMINGTON, UTAH

REVISIONS

NO.	APPROVAL	DESCRIPTION

Stamp

PROFESSIONAL ENGINEER
BRIAN HICKS
No. 7760937
STATE OF UTAH

Designed By:	AS
Drawn By:	AS
Date:	02.23.2024
Checked By:	RB
Project No:	22-246

Drawing Title
RESTROOM/ PAVILION POWER PLAN

Drawing number
E152

100 PERCENT SET

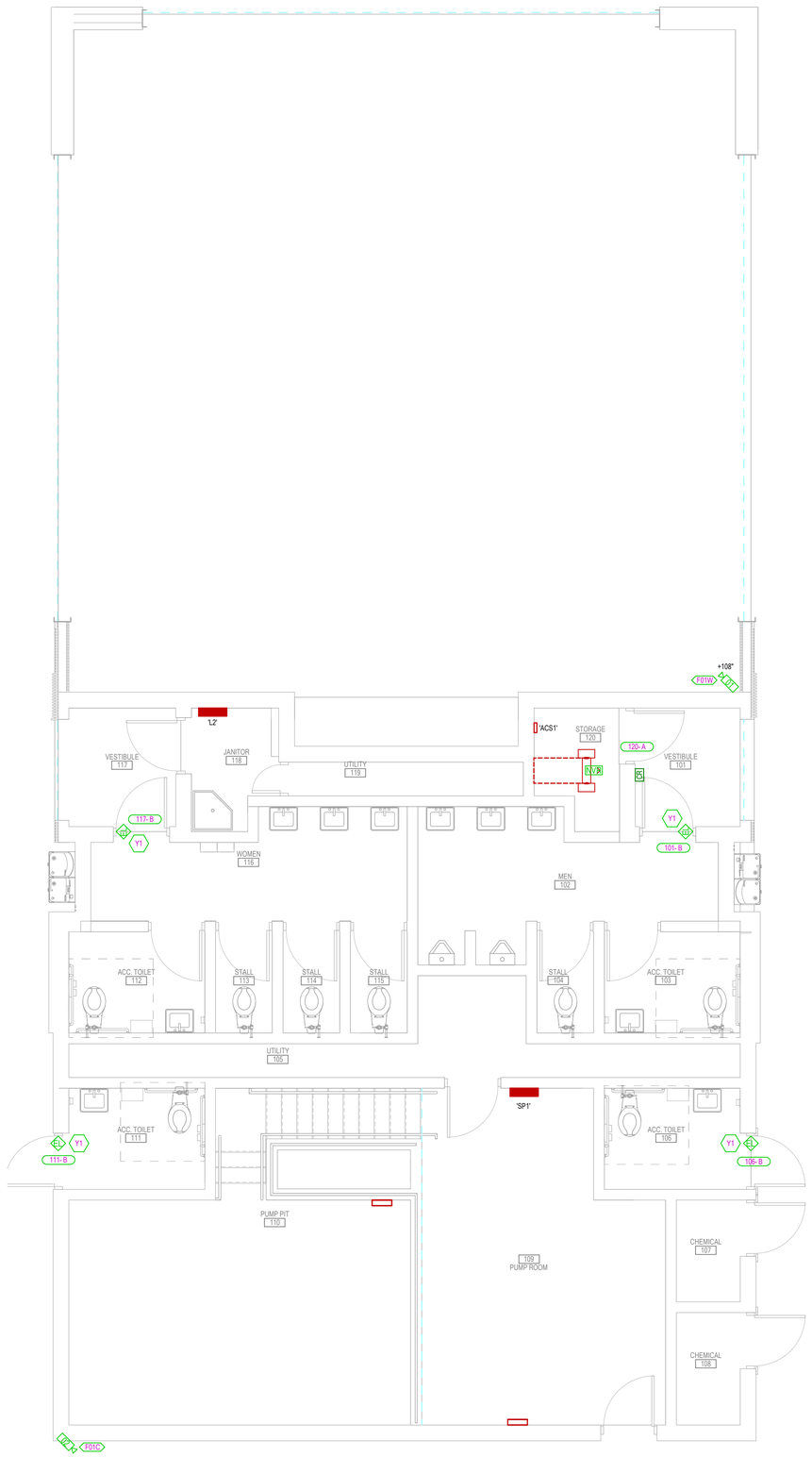

RESTROOM/PAVILION SYSTEMS PLANS

SCALE = 1/4" = 1'-0"

SECURITY GENERAL SHEET NOTES

1. THE VIDEO SURVEILLANCE CONTRACTOR SHALL PROVIDE ALL OF THE CORRECT HARDWARE AND MOUNTING EQUIPMENT FOR ALL SURVELLANCE CAMERAS AND EQUIPMENT. PRIOR TO STARTING ANY WORK CONTRACTOR SHALL COORDINATE A MEETING TO REVIEW AND 'VERIFY'
   - A. SURVEILLANCE CAMERA LOCATIONS, HEIGHTS, AND ORIENTATION
   - B. DISCUSS WHICH EF/ER/TR ROOMS CAN BE UTILIZED TO INSTALL VIDEO SURVEILLANCE EQUIPMENT INTO
   - C. EQUIPMENT AND THE CAT6 NETWORK CABLING SHOULD TERMINTE AND CONNECT TO.
2. PRIOR TO STARTING ANY WORK THE DIV. 28 ACCESS CONTROL CONTRACTOR SHALL COORDINATE A MEETING WITH OWNER, THE DIV. 8 CONTRACTOR, AND THE ELECTRICAL CONTRACTOR TO REVIEW THE DOOR HARDWARE SPECIFICATIONS:
   - A. VERIFY EXACTLY WHAT ELECTRIFIED DOOR HARDWARE IS GOING TO GET INSTALLED ON EACH DOOR
   - B. THE POWER REQUIREMENTS
   - C. HOW EACH DOOR NEED TO BE PROGRAMMED TO OPERATE
   - D. DISCUSS WHICH AREA OF THE EF/ER/TR ROOM CAN BE UTILIZED TO INSTALL THE ACCESS CONTROL HEAD-END PANELS AND POWER SUPPLIES INTO
   - E. WHICH TYPE OF POWER CIRCUITS THIS PANELS SHOULD BE CONNECTED INTO

SHEET KEYNOTES

Y1 PROVIDE CABLING TO DOOR LOCKS AND DOOR CONTACT. PROGRAM INTO ACCESS CONTROL SYSTEM TO LOCK AND UNLOCK DOORS ON SCHEDULE. PROGRAM ACCESS CONTROL SYSTEM TO SEND ALARM NOTIFICATION IF FORCED OR PROPPED OPEN AFTER HOURS.

blu line designs
planning | landscape architecture | design

8719 S. Sandy Parkway
Sandy, UT 84070
p 801.679.3157

CLIENT

FARMINGTON CITY
CONTACT: SYLVIA CLARK
PH: 801.939.9295
EMAIL:
SCLARK@FARMINGTON.UTAH.GOV

FARMINGTON

BNA CONSULTING
4225 Lake Park Blvd, Suite 275
West Valley City, UT 84120

P: 801.532.2196
F: 801.532.2305

www.bnaconsulting.com

SALT LAKE ST. GEORGE

IVY ACRES PARK

1397 WEST COOK LANE
FARMINGTON, UTAH

REVISIONS

NO	APPROVAL	DESCRIPTION

Stamp

PROFESSIONAL ENGINEER
BRIAN HICKS
No. 7709035
STATE OF UTAH

Designed By:	AS
Drawn By:	AS
Date:	02.23.2024
Checked By:	RB
Project No:	22-246

Drawing Title

RESTROOM/ PAVILION SYSTEM PLAN

Drawing number

E153

100 PERCENT SET

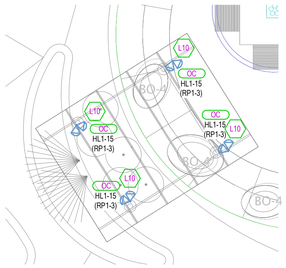

5 WATER FEATURE SHADE STRUCT.
SCALE = 1/8" = 1'-0"

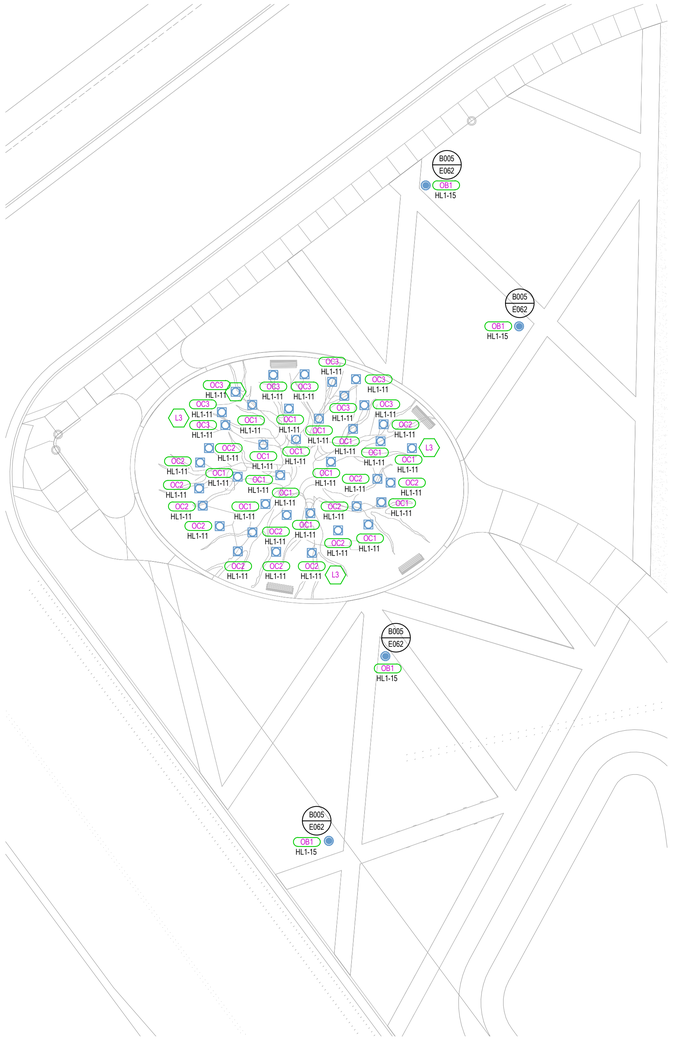

3 ENLARGED SITE MONUMENT PLAN
SCALE = 1/16" = 1'-0"

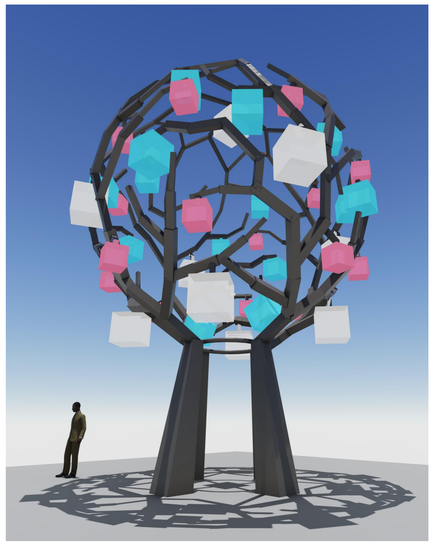

4 ARTISTS RENDERING OF TREE
SCALE = 3" = 1'-0"

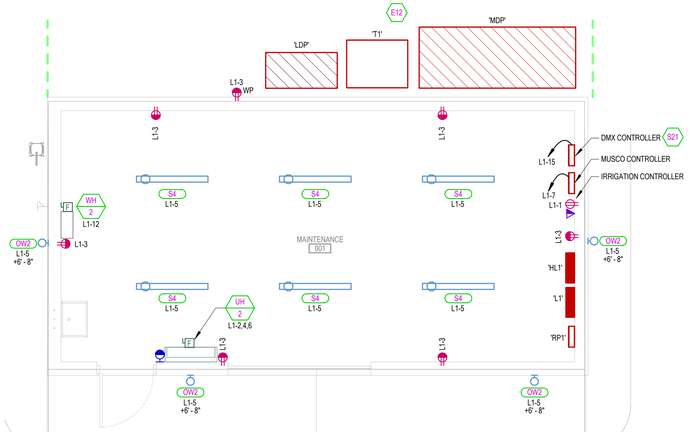

1 ENLARGED MAINTENANCE ELECTRICAL PLAN
SCALE = 1/4" = 1'-0"

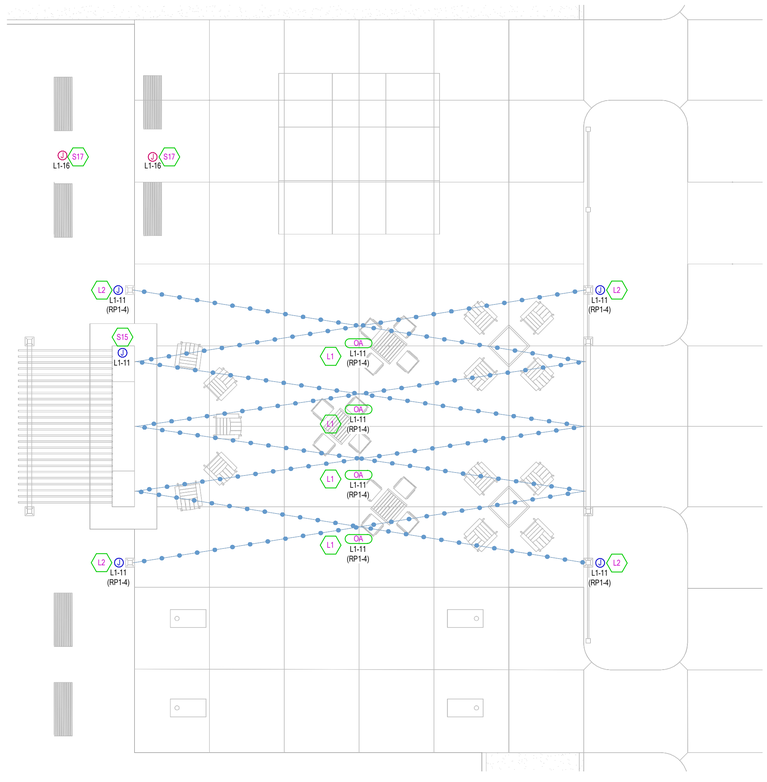

2 ENLARGED SITE SEATING PLAN
SCALE = 1/8" = 1'-0"

SHEET KEYNOTES

E12	PROVIDE CONCRETE PADS UNDER EQUIPMENT AND MOUNT PER SPECIFICATIONS.
L1	COORDINATE CONNECTIONS TO SHADE STRUCTURE AND CONDUIT/POWER THROUGH STEEL STRUCTURE WITH MANUFACTURER AND SHOP DRAWINGS PRIOR TO ROUGH-IN FOR ORDERING AND INSTALLATION OF TYPE OA FIXTURE. ALL POWER AND CONTROL WIRE TO BE RUN
L2	REMOTE DIMMING DRIVERS FOR TYPE OA TO BE WET LISTED/WEATHERPROOF AND INSTALLED IN GROUND BOXES. COORDINATE LOCATION WITH ARCHITECT.
L3	TO BE COORDINATED WITH ARTIST AND ELECTRICAL CONTRACTOR ON FOR FINAL LAYOUT OF DMX WIRING. INTEGRATED FIXTURES ARE DMX CONTROLLED.
L10	COORDINATE MOUNTING HEIGHT OF FIXTURES WITH ARCHITECT PRIOR TO ROUGH-IN. ALL WIRING TO BE CONCEALED IN TUBE STEEL OF COLOUMN.
S15	PROVIDE (1) 3/4" CONDUIT TO OUTDOOR FIREPLACE. COORDINATE LOCATION FOR POWER WITH SUBMITTALS PRIOR TO ROUGH-IN.
S17	PROVIDE LANDSCAPE FORMS (BM-PP-1G1U-SCBA)
S21	PROVIDE DC TRANSFORMER(EXPS-15V) FOR DMX/RDM SPLITTER (DIN RDS4) EQUIMENT. COORDINATE WITH MANUFACTURER SHOP DRAWINGS.

LIGHTING GENERAL SHEET NOTES

1. REFER TO ARCHITECTURAL REFLECTED CEILING PLANS FOR ALL FIXTURE LOCATIONS WITHIN A CEILING OR CEILING GRID. FOR AREAS WITHOUT CEILINGS, FIXTURE LOCATIONS ARE DIAGRAMMATIC. THE INTENT IS TO ALIGN, CENTER, OR SPACE FIXTURES BETWEEN ARCHITECTURAL AND STRUCTURAL ELEMENTS. COORDINATE WITH PAINTING CONTRACTOR FOR PAINTING OF EXPOSED RACEWAY.
2. FIELD VERIFY EXACT FIXTURE LENGTHS FOR CONTINUOUS ILLUMINATION FOR COVES AND LINEAR RUNS. PROVIDE CONTINUOUS ILLUMINATION WITH NO MORE THAN A 1" GAP BETWEEN THE END OF THE EDGE OF THE WALL / CEILING AND THE FIXTURE.
3. ELECTRICAL CONTRACTOR TO COORDINATE WITH MECHANICAL CONTRACTOR FOR PLACEMENT OF FIXTURES WITHIN MECHANICAL ROOMS.
4. ALL ROOM CONTROLLERS AND/OR POWER PACKS SHALL BE INSTALLED IN THE CEILING SPACE DIRECTLY ABOVE THE ENTRY DOOR TO THE SPACE IT IS CONTROLLING.
5. ALL UNDERCABINET LIGHTS MUST BE COORDINATED WITH MILLWORK FOR EXACT LENGTHS. ALL UNDERCABINET LIGHTS SHALL BE COORDINATED WITH MILLWORK SHOP DRAWINGS.
6. PROVIDE 0-10V DIMMING CONDUCTORS FOR ALL AREAS AND/OR ROOMS WHERE 0-10V DIMMING IS INDICATED BY THE RELAY PANEL SCHEDULE AND/OR WALL STATION CONTROL SEQUENCE.
7. SUBSCRIPT ADJACENT TO LIGHT FIXTURE INDICATES CONTROLS, PROVIDE LIGHTING CONTROLS WITH THE REQUIRED NUMBER OF RELAY/DIMMERS. PROVIDE ADDITIONAL RELAY/DIMMERS FOR DAYLIGHT ZONES AS REQUIRED.

POWER GENERAL SHEET NOTES

1. ELECTRICAL CONTRACTOR SHALL COORDINATE EXACT LOCATION OF ALL MECHANICAL UNITS WITH MECHANICAL CONTRACTOR.
2. CIRCUITS TO ALL MECHANICAL EQUIPMENT SHALL BE DEDICATED UNLESS NOTED OTHERWISE.
3. PROVIDE 120V CIRCUIT FROM THE NEAREST PANELBOARD FOR FIRE/SMOKE DAMPER RELAYS. PROVIDE FIRE ALARM MODULES AND RELAYS AS NECESSARY FOR ALL FIRE/SMOKE DAMPERS SHOWN ON DIVISION 23 DRAWINGS. ALL FIRE/SMOKE DAMPERS SHALL HAVE A MANUAL OVERRIDE SWITCH. PROVIDE DUCT DETECTOR WITHIN 5 FEET OF EACH FIRE/SMOKE DAMPER. REFER TO DIAGRAM D012 ON SHEET XXXX.

blu line designs
planning | landscape architecture | design
8719 S. Sandy Parkway
Sandy, UT 84070
p 801.679.3157

CLIENT
FARMINGTON CITY
CONTACT: SYLVIA CLARK
PH: 801.939.9295
EMAIL:
SCLARK@FARMINGTON.UTAH.GOV

FARMINGTON

BNA CONSULTING
4225 Lake Park Blvd, Suite 275
West Valley City, UT 84120
P: 801.532.2196
F: 801.532.2305
www.bnaconsulting.com
SALT LAKE ST. GEORGE

IVY ACRES PARK

1397 WEST COOK LANE
FARMINGTON, UTAH

REVISIONS

NO.	symmetry	DESCRIPTION

Stamp



Designed By:	AS
Drawn By:	AS
Date:	02.23.2024
Checked By:	RB
Project No:	22-246

Drawing Title
ENLARGED ELECTRICAL SITE PLANS

Drawing number
E154

100 PERCENT SET

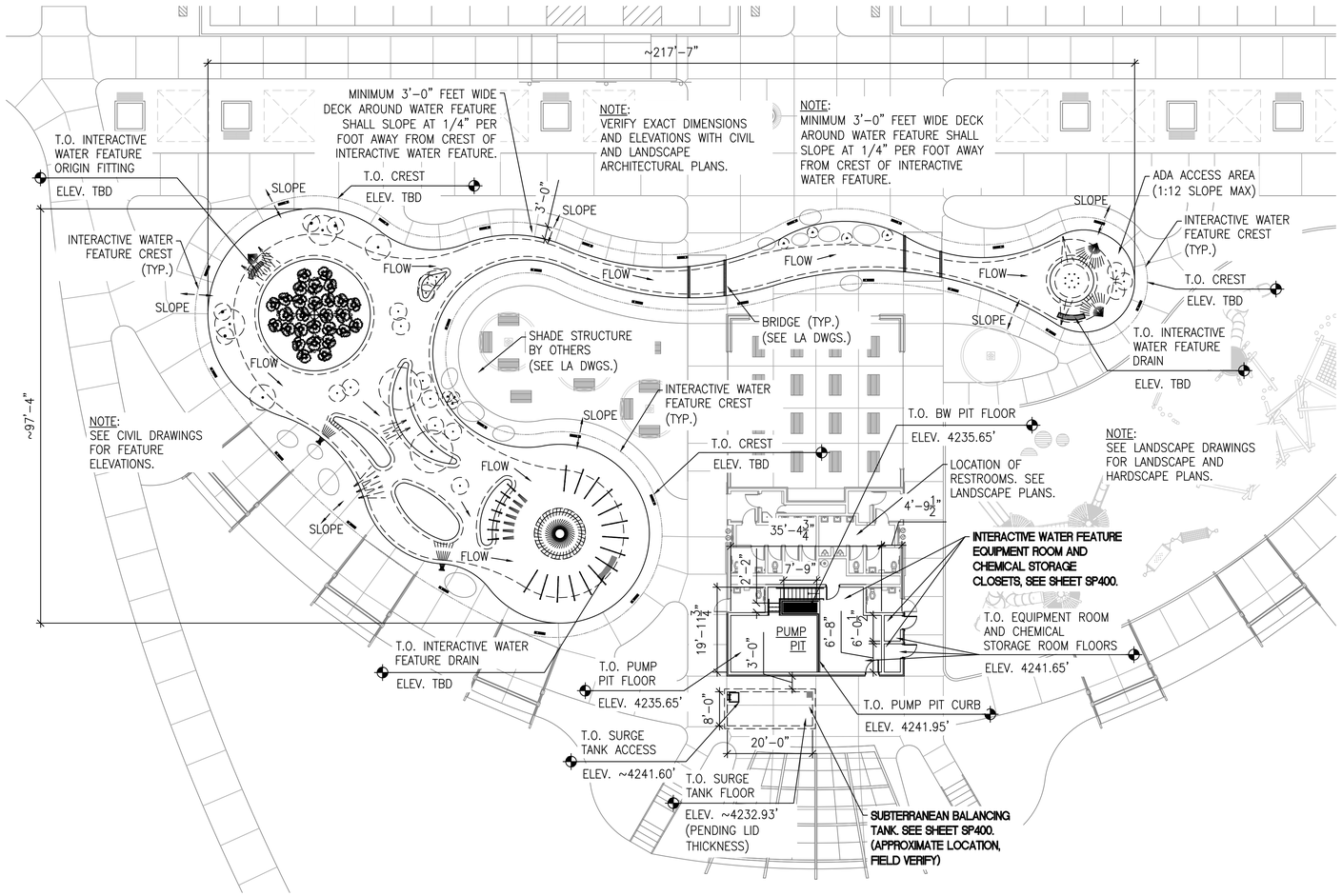

OVERALL INTERACTIVE WATER FEATURE PLAN

SCALE: 1/16"=1'-0"

NORTH

SANITARY FIXTURES:

RESTROOM FACILITIES ARE BY OTHERS
SEE ARCHITECTURAL PLANS
EACH RESTROOM SHALL INCLUDE A CHANGING TABLE.

INTERACTIVE WATER FEATURE HOURS OF OPERATION:

10:00 AM TO 8:00 PM (VERIFY WITH OWNER)
INTERACTIVE WATER FEATURE NOT TO BE OPERATED AFTER DARK WITHOUT ADEQUATE LIGHTING.

WINTERIZATION NOTE:

INTERACTIVE WATER FEATURE MUST BE WINTERIZED WHENEVER THERE IS A POTENTIAL FOR FREEZING TEMPERATURES. ALL PIPES MUST BE DRAINED. PROVIDE WINTERIZATION CAPS AS REQUIRED FOR FEATURES.

REQUIRED SAFETY EQUIPMENT

ONE (1)– 27 UNIT – FIRST AID KIT
(UTAH DEPARTMENT OF HEALTH STANDARD)

ELEVATION NOTE:

THE SITE IMPROVEMENTS HAVE BEEN DESIGNED BASED ON A REFERENCE ELEVATION AT THE INTERACTIVE WATER FEATURE CREST PROVIDED ON THIS SHEET. THE CONTRACTOR IS RESPONSIBLE TO VERIFY THE REFERENCED ELEVATIONS AS INDICATED IN EACH LOCATION PROVIDED PRIOR TO BEGINNING WORK TO BRING ANY DISCREPANCIES TO THE ATTENTION OF THE LANDSCAPE ARCHITECT ON CONTRACTOR COMPANY LETTERHEAD PRIOR TO BEGINNING WORK. IN THE EVENT THE CONTRACTOR FAILS TO VERIFY AND CONFIRM REFERENCE ELEVATIONS PRIOR TO BEGINNING WORK AND DISCREPANCIES DO IN FACT EXIST, THE CONTRACTOR SHALL BE RESPONSIBLE FOR ANY AND ALL MODIFICATIONS TO CONSTRUCTION WORK AS DIRECTED BY THE ARCHITECT INCLUDING ADDITIONAL DESIGN FEES (IF NECESSARY) AT NO ADDITIONAL COST TO THE OWNER.

CONSTRUCTION OBSERVATION SCHEDULE:

THE POOL CONTRACTOR SHALL CONTACT THE FEATURE ENGINEERS PRIOR TO THE FOLLOWING MILESTONES OF CONSTRUCTION TO SCHEDULE AN ON–SITE OBSERVATION VISIT. CONSTRUCTION WORK RELATED TO THESE MILESTONES SHALL NOT BE COMPLETED UNTIL SAID VISIT HAS BEEN COMPLETED:

1. PRE–PIPING ENCASEMENT / SOIL COVER
2. PRE–CONCRETE PLACEMENT
3. SUBSTANTIAL COMPLETION PUNCH LIST

ROCK AND ROCK LIKE PLAY FEATURES REGULATIONS:

DEFINITIONS:

EXEMPT ROCK OR ROCK–LIKE FEATURE: ANY ROCK OR ROCK–LIKE FEATURE THAT IS NOT WITHIN THE SPLASH ZONE OR IS NOT DESIGNED FOR STANDING ON OR CLIMBING ON AND PRESENTS A VERTICAL SURFACE THAT DISCOURAGES STANDING ON OR CLIMBING ON AND EXTENDS ABOVE 36" IN HEIGHT. THE VERTICAL SURFACE SHALL NOT BE DESIGNED IN A MANNER WHICH WOULD ALLOW FOOT OR HAND HOLDING HORIZONTAL SURFACES.

NON–EXEMPT (REGULATED) ROCK OR ROCK–LIKE FEATURE: ANY ROCK OR ROCK–LIKE FEATURE THAT IS DESIGNED FOR CLIMBING OR STANDING PLAY WITHIN THE SPLASH ZONE OF THE INTERACTIVE WATER FEATURE.

REGULATIONS:

1. ROCK OR ROCK–LIKE FEATURES SHALL BE OF THE TYPE OR CONSTRUCTED TO PROVIDE AS SURFACE MATERIAL THAT IS NON–SLIP, NON–FLAKING DURABLE SURFACE. (REG. #2)
2. ANY ROCK OR ROCK–LIKE FEATURE DESIGNED FOR CLIMBING OR STANDING PLAY MUST NOT EXCEED 18" TOTAL HEIGHT. (PLAYGROUND GUIDELINES)
3. MULTIPLE ROCK OR ROCK–LIKE FEATURES THAT ARE STACKED ON TOP OF ONE ANOTHER CANNOT HAVE A VERTICAL RISE GREATER THAN 7" OR A HORIZONTAL RUN OF LESS THAN 5" AND MUST NOT EXCEED 18" IN TOTAL HEIGHT. (PLAYGROUND GUIDELINES AND REG. #2 4.10.5 UNDER RECESSED STEPS)
4. THE DISTANCE BETWEEN ANY TWO ROCK OR ROCK–LIKE FEATURES, OR ANY ROCK OR ROCK–LIKE FEATURE AND ANY OTHER OBSTRUCTION ON THE PLAY OR DECK SURFACE, SHALL NOT BE LESS THAN 3'–0". (REG. #2, PLAYGROUND GUIDELINES = 6'–0")
5. ANY ROCK OR ROCK–LIKE FEATURE LOCATED WITHIN THE SPLASH ZONE OF ANY INTERACTIVE WATER FEATURE SHALL NOT ALLOW WATER AROUND THE ROCK OR ROCK–LIKE FEATURE TO RISE A DEPTH GREATER THAT 2" (2" VIA ACCEPTED CHILD SAFETY SITE REFERENCE, THE AMERICAN ACADEMY OF PEDIATRICS 1994.)

CLEANING EQUIPMENT

ONE PORTABLE ELECTRIC VACUUM:
SPECTRUM POOL PRODUCTS
SPECTRACLEAN SERIES MODEL – WILDCAT E 1
INCLUDES: 1.0 HP PUMP WIRED FOR 110 VAC (GFI PROTECTED), 100' ELECTRIC CORD, AND 155 SF CARTRIDGE FILTER IN STAINLESS STEEL CANISTER WITH STAINLESS STEEL CART. PROVIDE COMPLETE WITH GFCI SHOCK PROTECTOR

ONE – VACUUM HEAD
TWO – VACUUM HOSES 2"ø, 20'–0" LONG (MIN.)
ONE – HANDLE EXTENTION
ONE – WALL BRUSH
ONE – LEAF SKIMMER
ONE – TEST KIT – MANUFACTURER: TAYLOR
TEST KIT SHALL INCLUDE TESTING CAPABILITIES FOR: UNSTABILIZED FREE CHLORINE, FREE RESIDUAL CHLORINE, TOTAL CHLORINE, BROMINE, IODINE, pH, ACID AND BASE DEMAND, TOTAL ALKALINITY AND CYANURIC ACID.
ONE – TEST KIT FOR TOTALLY DISSOLVED SOLIDS

SAFETY AND ACCESSIBILITY NOTES:

SAFETY ITEMS, REQUIRED SIGNS, HEALTH ISSUES, AND DRESSING ROOM REQUIREMENTS THAT ARE INDICATED ON THE DRAWINGS, OR IN THE SPECIFICATIONS ARE FOR GENERAL GUIDANCE ONLY. THE POOL CONTRACTOR, AND/OR THE OWNER/OPERATOR OF THE FACILITY SHALL BE RESPONSIBLE FOR FURNISHING AND MAINTAINING ALL ITEMS REQUIRED BY THE REGULATIONS FOR THE DESIGN, CONSTRUCTION, AND OPERATION OF PUBLIC SWIMMING POOLS.

OSHA SAFETY DURING CONSTRUCTION:
CONTRACTORS SHALL REFERENCE AND FOLLOW OSHA STANDARDS 29 CFR AND ALL OTHER APPLICABLE STANDARDS.

(IF SWIMMING POOL ADA ACCESS IS SHOWN) THESE PLANS ONLY ADDRESS AMERICANS WITH DISABILITY ACT (ADA) ACCESSIBILITY INTO THE SWIMMING POOL WATER FROM THE ADJACENT DECK. THIS PLAN DOES NOT COVER ACCESSIBILITY OF THE ENTIRE FACILITY. THE OWNER OR THEIR AGENT SHALL BE RESPONSIBLE FOR REVIEW, ASSESSMENT AND DESIGN FOR ALL ADA ACCESSIBILITY REQUIREMENTS.

REQUIRED SIGNS:

SIGNS BY GENERAL CONTRACTOR
SEE LANDSCAPE ARCHITECTURAL PLANS AND SPECIFICATIONS FOR SIGN REQUIREMENTS (SIGNS REQUIRED TO BE IN PLAIN VIEW OF WATER FEATURE)

INTERACTIVE WATER FEATURE SAFETY SIGN:

SIGN HEADING LETTERING SHALL BE 2" HIGH. THE BULLETED RULES SHALL BE IN LETTERING THAT IS MINIMUM ONE–HALF INCH HIGH.

– NO RUNNING ON OR AROUND THE INTERACTIVE WATER FEATURE
– BE AWARE OF POTENTIALLY SLIPPERY SURFACES
– CHILDREN UNDER THE AGE OF 12 MUST HAVE ADULT SUPERVISION
– NO FOOD, DRINK, GLASS, OR PETS
ARE ALLOWED ON OR AROUND THE INTERACTIVE WATER FEATURE
– FOR THE HEALTH OF ALL USERS
RESTROOMS SHALL BE USED FOR THE CHANGING OF DIAPERS

EMERGENCY TELEPHONE NUMBERS SIGN:

A SIGN WITH 2" HIGH CAPITAL LETTERING MUST BE POSTED IN THE IMMEDIATE VICINITY OF THE WATER FEATURE STATING THE LOCATION OF THE NEAREST TELEPHONE AND EMERGENCY TELEPHONE NUMBERS WHICH SHALL INCLUDE:

* 911 (OR OTHER LOCAL EMERGENCY NUMBER)

PERSONAL HYGIENE AND BEHAVIOR RULES SIGN:

THE FACILITY OPERATOR AND STAFF IS RESPONSIBLE FOR THE ENFORCEMENT OF THE FOLLOWING PERSONAL HYGIENE AND BEHAVIOR RULES:

EASILY READABLE PLACARDS EMBODYING THE FOLLOWING RULES OF PERSONAL HYGIENE AND BEHAVIOR MUST BE CONSPICUOUSLY POSTED IN THE WATER FEATURE AREA AND IN THE RESTROOMS. LETTERING SHALL BE MINIMUM ONE–HALF INCH HIGH. SIGN TITLE OF PERSONAL HYGIENE AND BEHAVIOR RULES SHALL HAVE 2 INCH HIGH LETTERING.

1) A PERSON HAVING A COMMUNICABLE DISEASE TRANSMISSIBLE BY WATER MUST BE EXCLUDED FROM PUBLIC WATER FEATURES. A PERSON HAVING ANY EXPOSED SUB–EPIDERMAL TISSUE, INCLUDING OPEN BLISTERS, CUTS, OR OTHER LESIONS MAY NOT USE A PUBLIC POOL. A PERSON WHO HAS OR HAS HAD DIARRHEA WITHIN THE LAST TWO WEEKS CAUSED BY AN UNKNOWN SOURCE OR FROM ANY COMMUNICABLE OR FECAL–BORNE DISEASE MAY NOT ENTER ANY PUBLIC WATER FEATURE.
2) ANY CHILD UNDER THREE YEARS OLD, ANY CHILD NOT TOILET TRAINED, AND ANYONE WHO LACKS CONTROL OF DEFECATION SHALL WEAR A WATER RESISTANT SWIM DIAPER AND WATERPROOF SWIMWEAR. SWIM DIAPERS AND WATERPROOF SWIMWEAR SHALL HAVE WAIST AND LEG OPENINGS FITTED SUCH THAT THEY ARE IN CONTACT WITH THE WAIST OR LEG AROUND THE ENTIRE CIRCUMFERENCE.
3) RUNNING, BOISTEROUS PLAY OR ROUGH PLAY, EXCEPT SUPERVISED WATER SPORTS, ARE PROHIBITED.
4) DIAPERS SHALL BE CHANGED ONLY IN RESTROOMS OR CHANGING STATIONS AND SHALL NOT BE CHANGED AT THE WATER FEATURE. THE PERSON OR PERSONS WHO CHANGE THE DIAPER MUST WASH THEIR HANDS THOROUGHLY WITH SOAP BEFORE RETURNING TO THE WATER FEATURE.

CHEMICAL STORAGE ROOM DOOR SIGN:

(PROVIDED BY POOL CONTRACTOR)

PROVIDE AN NFPA 704 MARKING SYSTEM IDENTIFICATION PLACARD ON THE ENTRY DOOR TO THE STORAGE AREA OF EACH CHEMICAL STORAGE ROOM AS REQUIRED BY THE NFPA 704.

ITEMS PROVIDED BY MECHANICAL/ PLUMBING AND/OR CIVIL DESIGNER AND CONTRACTOR:

(THE FOLLOWING ITEMS SHALL BE DESIGNED BY A MECHANICAL/PLUMBING ENGINEER AND PROVIDED BY A MECHANICAL/PLUMBING CONTRACTOR, HOWEVER THE MECHANICAL TRADES' RESPONSIBILITIES ARE NOT LIMITED TO THESE ITEMS.) (NIPC)

1. BUILDINGS CONTAINING INDOOR POOLS, POOL EQUIPMENT ROOMS, ACCESS SPACES, BATHHOUSES, DRESSING ROOMS, SHOWER ROOMS AND TOILET SPACES MUST BE VENTILATED IN ACCORDANCE WITH AMERICAN SOCIETY OF HEATING, REFRIGERATING AND AIR–CONDITIONING ENGINEERS STANDARD 62.1–2004. (MAXIMUM AMBIENT AIR TEMPERATURE OF THE EQUIPMENT ROOM IS 104° F).
2. PROVIDE FLOOR DRAINS AND SEWER CONNECTIONS AS REQUIRED BY LOCAL CODES AND AS SHOWN ON DRAWINGS (I.E. IN BOTTOM OF BACKWASH SUMP AND PUMP PIT). SIZE SEWER LINE TO HANDLE FILTER BACKWASH RATES AS SHOWN ON PLANS OR AS REGULATED BY LOCAL CODE.
3. OUTDOOR POOL DECK DRAINS SHALL DRAIN TO STORM SEWER OR APPROVED WASTE.
4. PROVIDE POTABLE WATER LINE (SIZED AS SPECIFIED ON DRAWINGS) WITH SHUT–OFF VALVES TO LOCATIONS SHOWN ON DRAWINGS OR AS DIRECTED BY POOL CONTRACTOR.
5. PROVIDE HOSE BIBS IN THE INTERACTIVE WATER FEATURE AREA TO ALLOW FOR A COMPLETE WASH DOWN OF THE INTERACTIVE WATER FEATURE.
6. CHEMICAL STORAGE CLOSETS SHALL BE VENTILATED TO AN OUTSIDE LOCATION.
7. PER OSHA AND ANSI REQUIREMENTS, MECHANICAL SHALL PROVIDE AND INSTALL EITHER PLUMBED EYE WASH AND EMERGENCY SHOWER STATION OR SELF CONTAINED GRAVITY FEED EYE WASH AND EMERGENCY SHOWER STATION, IN AREAS WHERE THE EYES OR BODY OF ANY PERSON MAY BE EXPOSED TO INJURIOUS CORROSIVE MATERIALS. STATIONS MUST HAVE TEPID WATER SUPPLY LINES AND DRAIN LINES.

CHEMICAL STORAGE QUANTITIES:

SODIUM HYPOCHLORITE / T–CHLOR/ LIQUID CHLORINE:
TWO 55 GALLON DRUMS = 110 GALLONS

HYDROCHLORIC ACID:
THREE 15 GALLON DRUMS = 45 GALLONS

CONFINED SPACE SAFETY NOTE:

THE GENERAL CONTRACTOR IS RESPONSIBLE FOR PROVIDING A CONFINED SPACE SAFETY PLAN PRIOR TO PERFORMING WORK WITHIN THE BALANCING TANK.

INTERACTIVE WATER FEATURE LAYOUT ON SITE:

DIMENSIONS AND ELEVATIONS SHOWN ARE FOR REFERENCE ONLY. INTERACTIVE WATER FEATURE CONTRACTOR SHALL HAVE INTERACTIVE WATER FEATURE AND FEATURES LAID OUT ON THE SITE BY A PROFESSIONAL SURVEYOR PRIOR TO EXCAVATION. INTERACTIVE WATER FEATURE CONTRACTOR IS RESPONSIBLE FOR INTERACTIVE WATER FEATURE SPECIFIC SURVEY WORK. AN ELECTRONIC FILE OF THE INTERACTIVE WATER FEATURE AUTOCAD BASE MAY BE PROVIDED TO THE CONTRACTOR FOR SURVEYOR'S USE. SEE CIVIL AND ARCHITECTURAL DRAWINGS FOR REFERENCE POINTS AND ADDITIONAL SITE INFORMATION.

GENERAL NOTES:

1. "POOL" MEANS ANY INTERACTIVE WATER FEATURE, INTERACTIVE WATER FEATURE, WATER FEATURE, ETC. INCLUDED IN THIS PROJECT.
2. WATER FEATURES INCLUDED ON THIS PLAN SHALL BE BUILT BY A LICENSED POOL CONTRACTOR IN THE STATE WHERE THE FEATURE IS BEING BUILT.
3. NIPC = NOT IN POOL CONTRACT.
4. WATER DESIGN IS NOT RESPONSIBLE FOR MEANS, METHODS OR JOB SITE SAFETY ITEMS.
5. ALL PLAN DIMENSIONS ARE FEATURE CREST TO FEATURE CREST WALL, UNLESS OTHERWISE NOTED (U.O.N.).
6. A THE INTERACTIVE WATER FEATURE MUST BE EQUIPPED WITH A FIRST AID KIT WHICH INCLUDES AT A MINIMUM THE ALL THE ITEMS LISTED IN THE REQUIRED SAFETY EQUIPMENT NOTES. THE POOL CONTRACTOR SHALL PROVIDE THE FIRST AID KIT TO THE OWNER.
7. INTERACTIVE WATER FEATURE SHALL COMPLY WITH THE STATE OF UTAH HEALTH REGULATION FOR DESIGN, CONSTRUCTION AND OPERATION OF PUBLIC POOLS, APPLICABLE LOCAL STANDARDS, INTERNATIONAL BUILDING CODE [IBC], AND THE ANSI/APSP/ICC STANDARDS) FOR PUBLIC POOLS.
8. ENGINEERING CONSULTANTS, ARCHITECT, AND POOL CONTRACTOR SHALL NOT BE HELD LIABLE, NOR RESPONSIBLE, FOR ANY LIFE SAFETY ISSUES REGARDING THE OPERATION OF THE POOL AND POOL FACILITIES.
9. PRIOR TO INSTALLATION OF THE INTERACTIVE WATER FEATURE, A PLOT PLAN WILL BE SUBMITTED TO THE BUILDING INSPECTION DEPARTMENT FOR APPROVAL. CONSTRUCTION SHALL NOT BEGIN BEFORE FINAL PLANS ARE SUBMITTED AND A PERMIT FOR CONSTRUCTION IS ISSUED BY THE REGULATORY AUTHORITY.
   THE FOLLOWING INFORMATION MUST APPEAR ON THE POOL PLOT PLAN:
   A. THE DISTANCE FROM THE EDGE OF THE INTERACTIVE WATER FEATURE TO ALL FOOTINGS, PROPERTY LINES, AND TOP AND TOES OF SLOPES.
   B. THE LOCATION OF EXISTING OR PROPOSED FENCING, COMPLYING WITH FENCE ORDINANCES.
10. THE INTERACTIVE WATER FEATURE PLANS SHALL BE SUBMITTED TO THE LOCAL HEALTH DEPARTMENT FOR REVIEW AND A COPY OF THE APPROVED PLANS SHALL BE RECEIVED BY THE OWNER/ARCHITECT/INTERACTIVE WATER FEATURE ENGINEER PRIOR TO BEGINNING CONSTRUCTION.

ITEMS PROVIDED BY GENERAL CONTRACTOR:

(THE FOLLOWING ITEMS SHALL BE PROVIDED, HOWEVER THE GENERAL CONTRACTOR'S RESPONSIBILITIES ARE NOT LIMITED TO THESE ITEMS)
(NIPC)

1. NIPC = NOT IN INTERACTIVE WATER FEATURE CONTRACTOR'S CONTRACT.
2. ALL SITE PREPARATION BY GENERAL CONTRACTOR.
3. THE GENERAL CONTRACTOR SHALL VERIFY THE LOCATION OF CABLES, CONDUITS, PIPES, SEWERS AND OTHER UNDERGROUND UTILITIES AND SHALL TAKE PROPER PRECAUTIONS TO AVOID DAMAGE TO SUCH UTILITIES. IN THE EVENT OF A CONFLICT OR DISCREPANCIES, THE GENERAL CONTRACTOR SHALL PROMPTLY NOTIFY THE OWNER AND REQUEST FOR NECESSARY RELOCATION. FAILURE TO FOLLOW THIS PROCEDURE PLACES UPON THE GENERAL CONTRACTOR THE RESPONSIBILITY OF MAKING REPAIR OR REPLACE SUCH DAMAGE AT HIS OWN EXPENSE.
4. GENERAL CONTRACTOR TO PROVIDE NECESSARY ELECTRICAL, PLUMBING, AND MECHANICAL WORK IN INTERACTIVE WATER FEATURE AREA INCLUDING: AREA LIGHTING, VENTILATION, DRAINAGE, ETC. ACCORDING TO LOCAL CODES (NIPC).
5. ALL SURFACE WATER SHALL DRAIN AWAY FROM THE CREST OF THE INTERACTIVE WATER FEATURE AT 1/4" PER FOOT TO 3/8" PER FOOT TO DECK DRAINS OR LANDSCAPING.
6. SURFACE TREATMENT OF WET DECK AREAS SHALL BE IMPERVIOUS AND SLIP RESISTANT AS SPECIFIED ON DRAWINGS.
7. PERIMETER DECK DRAINAGE IS TO BE PROVIDED BY GENERAL CONTRACTOR PER LOCAL CODE REQUIREMENTS.
8. GENERAL CONTRACTOR TO PROVIDE EQUIPOTENTIAL BONDING GRID FOR POOL DECKING PER THE 2020 NEC ARTICLE 680 OR CURRENT ADOPTED ELECTRICAL CODE, SEE ELECTRICAL NOTES.
9. PROVIDE CONCRETE COVERED BALANCING TANK WITH AN ACCESS COVER AND PLASTIC LADDER RUNGS AS SHOWN ON PLANS.
10. PROVIDE A PUMP PIT WITH GUARDRAILS AND ACCESS LADDER RUNGS INTO THE PIT IN THE INTERACTIVE WATER FEATURE EQUIPMENT ROOM AS SHOWN ON THE PLANS.
11. PROVIDE A CONCRETE BACKWASH/EVACUATION PIT WITH NON–CORROSIVE GRATED ACCESS AND DRAIN LINE TO SANITARY SEWER FROM THE BACKWASH SUMP IN THE EQUIPMENT ROOM AS SHOWN ON PLANS.
12. EXTEND THE EXISTING POTABLE WATER LINE OR PROVIDE ONE (SIZED AS SPECIFIED ON DRAWINGS) WITH SHUT–OFF VALVES TO THE LOCATION SHOWN ON DRAWINGS OR AS DIRECTED BY INTERACTIVE WATER FEATURE CONTRACTOR.
13. PROVIDE EYE WASH AND SHOWER STATION TO MEET OSHA AND ASTM STANDARDS.
14. "NO RUNNING" TILES/INDICATORS PROVIDED BY POOL CONTRACTOR AND INSTALLED BY DECK CONTRACTOR.

ELECTRICAL NOTES:

(THE FOLLOWING ITEMS SHALL BE PROVIDED, HOWEVER THE ELECTRICAL CONTRACTOR'S RESPONSIBILITIES ARE NOT LIMITED TO THESE ITEMS)

ITEMS PROVIDED AND INSTALLED BY ELECTRICAL CONTRACTOR (NIPC):

1. PROVIDE ELECTRICAL SERVICE AND CONNECTIONS TO ALL PUMP MOTORS, VFD'S, CIRCUIT BREAKERS, DISCONNECTS, PANELS, RELAYS, CONTROLLERS, OR OTHER INTERACTIVE WATER FEATURE EQUIPMENT IN EQUIPMENT ROOM.
2. ALL INSTALLATION OF ELECTRICAL EQUIPMENT SHALL COMPLY WITH THE APPLICABLE PROVISIONS SET FORTH IN THE 2020 NATIONAL ELECTRICAL CODE AND STATE AND LOCAL ELECTRICAL CODES.
3. PROVIDE BONDING AND GROUNDING OF EQUIPOTENTIAL GRID IN DECK, INTERACTIVE WATER FEATURE MOTORS AND OTHER EQUIPMENT IN THE EQUIPMENT ROOM AND PUMP PIT (INCLUDING G.F.I. PROTECTION AS REQUIRED BY THE 2020 N.E.C.).
4. PROVIDE INTERACTIVE WATER FEATURE EQUIPMENT INTERLOCKING AS STATED IN THE INTERLOCKING NOTES LOCATED ON THE INTERACTIVE WATER FEATURE EQUIPMENT ROOM PLAN OF THESE DRAWINGS.
5. ELECTRICAL WIRING OR POWER SUPPLY LINES SHALL NOT BE ROUTED UNDERGROUND BENEATH THE INTERACTIVE WATER FEATURE.
6. NO OUTLETS WITHIN 10 FT. OF INTERACTIVE WATER FEATURE. ALL OUTLETS 10 FT. TO 20 FT. FROM INTERACTIVE WATER FEATURE TO BE G.F.I. PROTECTED. G.F.I. PROTECTION MUST BE PROVIDED IN ACCORDANCE WITH THE 2020 NATIONAL ELECTRIC CODE (N.E.C.) AND IN COMPLIANCE WITH LOCAL CODES FOR ALL LIGHTING CIRCUITS, MOTORS, OUTLETS, & ELECTRICAL CIRCUITS IN THE INTERACTIVE WATER FEATURE AREA.
7. INSTALL AN ELECTRICAL OUTLET (GFI PROTECTED) FOR PORTABLE POOL CLEANING EQUIPMENT. OUTLETS SHALL BE PLACED WITHIN 30' OF THE BALANCING TANK. (CLEANING EQUIPMENT GENERALLY HAS 50 FT. OF POWER CORD.). NO OUTLETS WITHIN 10' OF POOLS. (VACUUM: 1.0 HP PUMP, 110 VAC)
8. PROVIDE CONDUIT AND WIRING FOR ALL ELECTRICAL ITEMS INTERCONNECTED BETWEEN INTERACTIVE WATER FEATURE AND EQUIPMENT ROOM.

ITEMS PROVIDED AND INSTALLED BY INTERACTIVE WATER FEATURE CONTRACTOR:

1. INTERACTIVE WATER FEATURE CONTRACTOR SHALL BE RESPONSIBLE FOR BONDING OF ALL EQUIPMENT AND METAL ITEMS IN OR NEAR THE INTERACTIVE WATER FEATURE, INCLUDING: SLAB REINFORCING STEEL, INTERACTIVE WATER FEATURE NOZZLES, FILTERS ETC. WITH A MIN #8 BARE GROUND WIRE. ALL BONDING SHALL BE IN ACCORDANCE WITH THE 2020 NATIONAL ELECTRIC CODE ARTICLE 680 OR CURRENT ADOPTED NEC.
2. INTERACTIVE WATER FEATURE CONTRACTOR SHALL PROVIDE LOW VOLTAGE WIRING AND CONDUIT AS REQUIRED.

BID SET

blu line designs
planning | landscape architecture | design
8719 S. Sandy Parkway
Sandy, UT 84070
p 801.913.7994

CLIENT

FARMINGTON CITY
CONTACT: SYLVIA CLARK
PH: 801.939.9295
EMAIL:
SCLARK@FARMINGTON.UTAH.GOV

FARMINGTON

Water Design Inc
6740 South 1300 East
Salt Lake City, UT 84121
801.261.4009
www.waterdesigninc.com

The entire contents of the attached documents, including all sketches, plans, studies, drawings, schedules and specifications and all copyrights therein are, and shall remain the property of Water Design Incorporated. The documents and their contents may not be used, photocopied or reproduced digitally, electronically or in any other manner without the express prior written consent of Water Design Incorporated.

IVY ACRES PARK

1397 WEST COOK LANE
FARMINGTON, UT

REVISIONS

NO.	BY/PHASE	DESCRIPTION

LICENSED PROFESSIONAL ENGINEER
CHARLES ROSS ANDERSON
145589-2203
STATE OF UTAH
03/06/2024

Designed By:	BP
Drawn By:	TOS
Date:	03/06/2024
Checked By:	BA
Project No:	23-747FS

Drawing Title

OVERALL INTERACTIVE WATER FEATURE PLAN

Drawing number

SP100

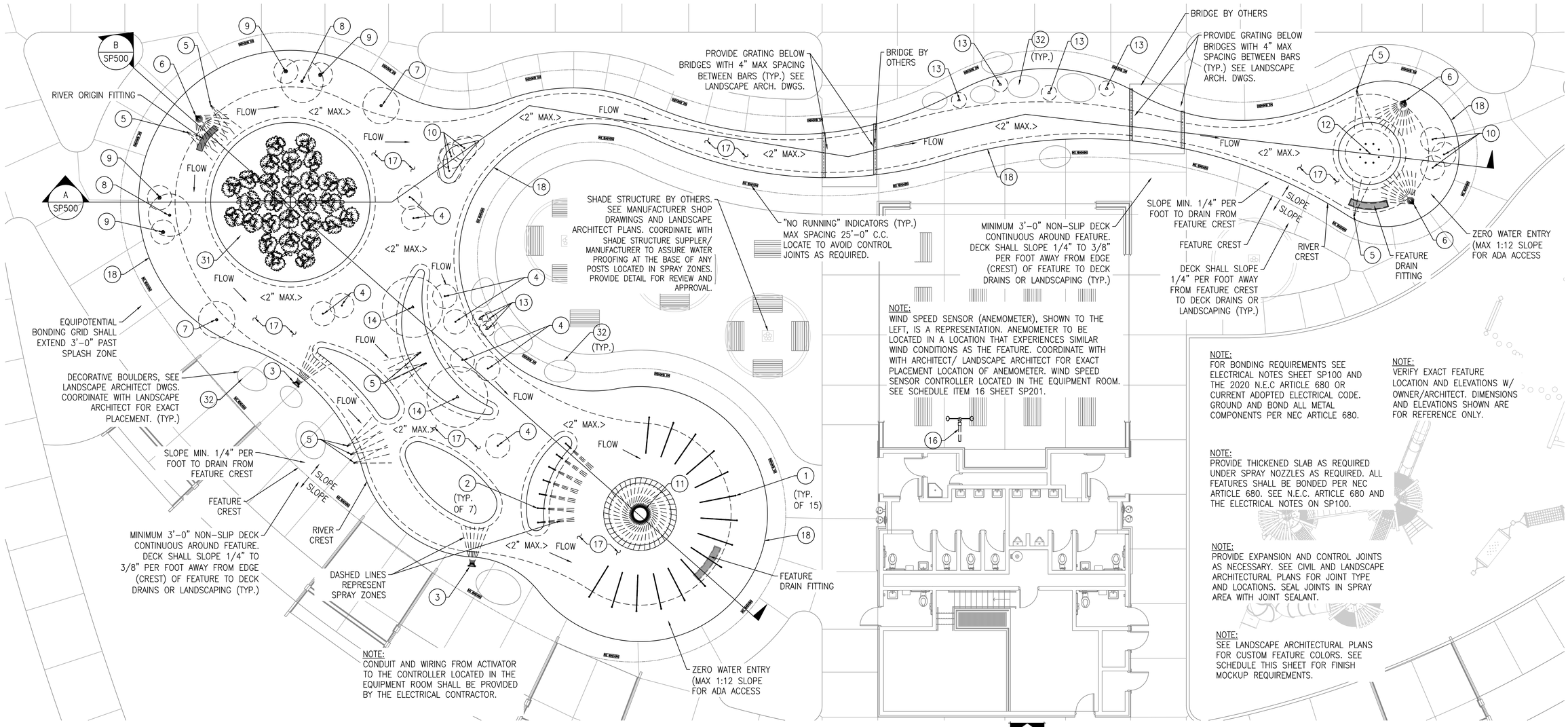

ENLARGED INTERACTIVE WATER FEATURE PLAN

SCALE: 1/8"=1'-0"

NORTH

FEATURE ELECTRICAL NOTES:

1. ELECTRICAL CONTRACTOR SHALL PROVIDE ALL WIRING AND CONDUIT FROM THE FEATURE ACTIVATORS TO THE ANIMATION CONTROL PANEL LOCATED IN THE WATER FEATURE EQUIPMENT ROOM. PROVIDE SIZE OF CONDUIT AND WIRING AS REQUIRED BY CRYSTAL FOUNTAINS.
2. ELECTRICAL CONTRACTOR SHALL PROVIDE ¾" DIAMETER CONDUIT FROM THE ANEMOMETER TO THE WIND SENSOR LOCATED IN THE WATER FEATURE EQUIPMENT ROOM. ANEMOMETER COMES COMPLETE WITH 300 FEET OF CABLE. ELECTRICAL CONTRACTOR SHALL PROVIDE ALL CABLE / WIRING CONNECTIONS FOR THE WIND SENSOR SYSTEM.
3. ELECTRICAL CONTRACTOR SHALL PROVIDE WATER LEVEL SENSOR CONDUIT AND WIRING AS REQUIRED BETWEEN THE SENSOR LOCATION IN THE BALANCING TANK AND THE CHEMICAL CONTROLLER LOCATED IN THE WATER FEATURE EQUIPMENT ROOM.
4. 14 AWG –2 WIRE CONDUCTORS SHALL BE USED FOR ELECTRICAL CONNECTIONS FROM ACTIVATORS TO CONTROLLERS, PER THE MANUFACTURER'S RECOMMENDATIONS (BY ELECTRICAL CONTRACTOR).

WATER FEATURE DATA:

SIZE:	~217'-6" X ~97'-4"
SHAPE:	FREEFORM
CONST. TYPE:	NON-SLIP CONCRETE
FEATURE WATER AREA:	~6,292 SQ.FT.
RIVER FEATURE OVERALL LENGTH:	~279 LINEAR FEET
BALANCING TANK VOLUME:	8,976 GALLONS
MINIMUM CIRCULATION FLOW:	300 GPM
MAXIMUM CIRCULATION FLOW:	381 GPM
TURNOVER RATE AT MINIMUM FLOW:	30 MINUTES
TURNOVER RATE AT MAXIMUM FLOW:	24 MINUTES
SPRAY FEATURES COMBINED FLOW:	913 GPM
SUPPLEMENTAL RIVER FLOW:	900 GPM
TREE FEATURE FLOW:	200 GPM
TOTAL FEATURE FLOW:	2013 GPM

INTERACTIVE WATER FEATURE NOTES:

1. 14 AWG –2 WIRE CONDUCTORS SHALL BE USED FOR ELECTRICAL CONNECTIONS FROM ACTIVATORS TO CONTROLLERS, PER THE MANUFACTURER'S RECOMMENDATIONS (BY ELECTRICAL CONTRACTOR).
2. ¾"Ø CONDUIT SHALL BE USED FOR ALL ACTIVATOR WIRING FROM WATER FEATURE TO THE CONTROLLERS IN THE EQUIPMENT ROOM, PER THE MANUFACTURER'S RECOMMENDATIONS (BY ELECTRICAL CONTRACTOR).ALL FEATURES SHALL BE BONDED PER NEC ARTICLE 680. SEE N.E.C. ARTICLE 680 AND THE ELECTRICAL NOTES ON SP100.
4. MAXIMUM WATER VELOCITY FOR INTERACTIVE PLAY IS 20 FT./SEC. STATED MAXIMUM THROWS AND HEIGHTS LISTED IN THE NOZZLE REMARKS REFLECT THIS MAXIMUM WATER VELOCITY OF 20 FT/SECOND.
5. THE WATER FEATURE SHALL BE WINTERIZED WHEN EVER THERE IS A POTENTIAL FOR FREEZING TEMPERATURE. ALL PIPES MUST BE DRAINED. PROVIDE WINTERIZING CAPS FOR FEATURES.

WATER FEATURE LAYOUT ON SITE:

DIMENSIONS SHOWN ARE FOR REFERENCE ONLY. WATER FEATURE CONTRACTOR SHALL HAVE WATER FEATURE AND FEATURES LAID OUT ON THE SITE BY A PROFESSIONAL SURVEYOR PRIOR TO EXCAVATION. WATER FEATURE CONTRACTOR IS RESPONSIBLE FOR WATER FEATURE SPECIFIC SURVEY WORK. AN ELECTRONIC FILE OF THE WATER FEATURE AUTOCAD BASE MAY BE PROVIDED TO THE CONTRACTOR FOR SURVEYOR'S USE. SEE CIVIL AND ARCHITECTURAL DRAWINGS FOR REFERENCE POINTS AND ADDITIONAL SITE INFORMATION.

SEE SHEET SP201 FOR INTERACTIVE WATER FEATURE SCHEDULE

INTERACTIVE WATER FEATURE CONTROLLER PROGRAMMING NOTES:

1. PROVIDE A FULLY PROGRAMMABLE PLAY FEATURE WATER FEATURE.
2. PROVIDE THE WATER FEATURE CONTROLLER TO ALLOW ACTIVATOR(S) TO CONTROL AND ACTIVATE THE FEATURE PUMP.
3. PROGRAM THE WATER FEATURE CONTROLLER TO ALLOW ACTIVATOR(S) TO ACTIVATE SEQUENCE PROGRAMS.
4. COORDINATE WITH OWNER FOR DURATION AND SEQUENCING OF PROGRAMS
5. FEATURES TO SHUT OFF AFTER PROGRAM HAS COMPLETED UNTIL THE ACTIVATOR IS TOUCHED AGAIN.
6. THE CONTROLLER SHALL HAVE THE FEATURE PUMP SHUT OFF IF THE PROGRAM IS NOT ACTIVATED AFTER A DURATION OF 15 MINUTES.
7. THE RIVER FEATURE PUMP SHALL RUN CONTINUOUSLY DURING OPERATING HOURS. PROVIDE A TIMER WITHIN THE FEATURE CONTROLLER.

WATER SPRAYS FLOW KEY

SCHEDULE NUMBER	FEATURE	QUANTITY	FEATURE FLOW (EACH NOZZLE)	TOTAL FLOW
1	CUSTOM ARCHING COLUMN JET	15	10 GPM	150 GPM
2	ARCHING STREAM JET	7	7 GPM	49 GPM
3	FYREFLY JET	2	14 GPM	28 GPM
4	BUBBLER	9	10 GPM	90 GPM
5	TRI-STREAM JET	9	5 GPM	45 GPM
6	CROWN JET	3	10 GPM	30 GPM
7	GROUND JET (NLG200)	2	39 GPM	78 GPM
8	GROUND JET (NLG203)	2	34 GPM	68 GPM
9	GUSHER	4	10 GPM	40 GPM
10	COLUMN JET	6	16 GPM	96 GPM
11	WATER WEAVE	1	173 GPM	173 GPM
12	GROUP VOLCANO	1	10 GPM	10 GPM
13	TULIP SPRAY	7	6 GPM	42 GPM
14	BUTTERCUP SPRAY	2	7 GPM	14 GPM
			COMBINED SPRAY FEATURES FLOW:	913 GPM
21	TREE FEATURE	1	200 GPM	200 GPM
N/A	RIVER FLOW	N/A	900 GPM	900 GPM

BID SET

blu line designs
planning | landscape architecture | design
8719 S. Sandy Parkway
Sandy, UT 84070
p 801.913.7994

CLIENT

FARMINGTON CITY
CONTACT: SYLVIA CLARK
PH: 801.939.9295
EMAIL:
SCLARK@FARMINGTON.UTAH.GOV

FARMINGTON

Water Design Inc
6740 South 1300 East
Salt Lake City, UT 84121
801.261.4009
www.waterdesigninc.com

The entire contents of the attached documents, including all sketches, plans, studies, drawings, schedules and specifications and all copyrights therein are, and shall remain the property of Water Design Incorporated. The documents and their contents may not be used, photocopied or reproduced digitally, electronically or in any other manner without the express prior written consent of Water Design Incorporated.

IVY ACRES PARK

1397 WEST COOK LANE
FARMINGTON, UT

REVISIONS

NO.	DATE/INITIAL	DESCRIPTION

LICENSED PROFESSIONAL ENGINEER
CHARLES ROSS ANDERSON
145589-2203
STATE OF UTAH
03/06/2024

Designed By:	BP
Drawn By:	TOS
Date:	03/06/2024
Checked By:	BA
Project No:	23-747FS

Drawing Title

ENLARGED INTERACTIVE WATER FEATURE PLAN

Drawing number

SP200

INTERACTIVE WATER FEATURE SCHEDULE

MARK	DESCRIPTION	QUANTITY	DETAIL	REQUIREMENT
NO RUNNING	"NO RUNNING" TILES	SEE PLAN	1 / SP600	IN-LAYS, INC. MMG SERIES
	REMARKS: 6" x 6" NON-SKID, FROST PROOF, CERAMIC "NO RUNNING" TILES WITH 4" HIGH RED LETTERING ON CONTRASTING COLOR BACKGROUND. PLACE IN LOCATIONS AS SHOWN ON THE WATER FEATURE DRAWINGS.			
	RIVER SOURCE FLOOR GRATE	SEE PLAN AND FITTING SCHEDULE SHEET SP300		
	FEATURE DRAIN	SEE PLAN AND FITTING SCHEDULE SHEET SP300		
1	CUSTOM ARCHING COLUMN JET	1 SET OF 15 15 TOTAL	2 / SP600	CRYSTAL FOUNTAINS #Q80471000 CUSTOM WMF ARCHING COLUMN JET
	REMARKS: INSTALL PER MANUFACTURER'S RECOMMENDATIONS. PROVIDE CAPS FOR WINTERIZATION. PROVIDE BONDING AS REQUIRED PER NEC 680.			
2	ARCHING STREAM JET	1 SET OF 7 7 TOTAL	3 / SP600	CRYSTAL FOUNTAINS WMD-100
	REMARKS: SET NOZZLES AT A 25° ANGLE TO AN ~6 FOOT THROW DISTANCE. FIELD VERIFY THROW ANGLE AND SPRAY DISTANCE WITH ARCHITECT. PROVIDE CAPS FOR WINTERIZATION. INSTALL PER MANUFACTURER'S RECOMMENDATIONS. PROVIDE BONDING AS REQUIRED PER NEC 680.			
3	FYREFLY JET WITH FAN SPRAY	2	4 / SP600	CRYSTAL FOUNTAINS WMT120A508
	REMARKS: 40° DECK MOUNTED NOZZLE WITH FAN SPRAY (SEVEN 3/16"ø HOLES) FACE PLATE. MAXIMUM WATER VELOCITY FOR INTERACTIVE PLAY IS 20 FT./SEC. INSTALL PER MANUFACTURER'S RECOMMENDATIONS. PROVIDE CAPS FOR WINTERIZATION.PROVIDE THICKENED SLAB AS REQUIRED PER MANUFACTURER'S INSTALLATION RECOMMENDATIONS. FIELD VERIFY SPRAY ANGLE AND HEIGHT WITH LANDSCAPE ARCHITECT. PROVIDE CAP FOR WINTERIZATION. PROVIDE BONDING AS REQUIRED PER NEC 680.			
4	UNDERWATER BUBBLER	9	5 / SP600	FOUNTAIN PEOPLE / WATER ODYSSEY FLUSH JET CLUSTER # EDF-150
	REMARKS: PROVIDE CAPS FOR WINTERIZATION. INSTALL PER MANUFACTURER'S RECOMMENDATIONS. MAXIMUM WATER VELOCITY FOR INTERACTIVE PLAY IS 20 FT./SEC. INSTALL PER MANUFACTURER'S RECOMMENDATIONS. PROVIDE CAPS FOR WINTERIZATION. PROVIDE BONDING AS REQUIRED PER NEC 680. PROVIDE THICKENED SLAB, FOOTING OR LEVELING PAD AS REQUIRED PER MANUFACTURER'S INSTALLATION RECOMMENDATIONS.			
5	TRI-STREAM JET	9	6 / SP600	CRYSTAL FOUNTAINS #WMD115
	REMARKS: SET NOZZLES AT A 25° ANGLE TO AN ~6 FOOT THROW DISTANCE. FIELD VERIFY THROW ANGLE AND SPRAY DISTANCE WITH ARCHITECT. PROVIDE CAPS FOR WINTERIZATION. INSTALL PER MANUFACTURER'S RECOMMENDATIONS. PROVIDE BONDING AS REQUIRED PER NEC 680.			
6	CROWN JET	3	7 / SP600	CRYSTAL FOUNTAINS #WMF076
	REMARKS: 15° NOZZLE ANGLE. SET TO AN ~6 FOOT THROW DISTANCE. FIELD VERIFY THROW ANGLE AND SPRAY DISTANCE WITH ARCHITECT. PROVIDE CAPS FOR WINTERIZATION. INSTALL PER MANUFACTURER'S RECOMMENDATIONS. PROVIDE BONDING AS REQUIRED PER NEC 680.			
7	GROUND JET	2	8 / SP600	CRYSTAL FOUNTAINS #NLG202
	REMARKS: ADJUST NOZZLE FOR A SPRAY HEIGHT OF 6'. PROVIDE CAPS FOR WINTERIZATION. INSTALL PER MANUFACTURER'S RECOMMENDATIONS. PROVIDE CAPS FOR WINTERIZATION. PROVIDE BONDING AS REQUIRED PER NEC 680.			
8	GROUND JET	2	8 / SP600	CRYSTAL FOUNTAINS #NLG203
	REMARKS: ADJUST NOZZLE FOR A SPRAY HEIGHT OF 6'. PROVIDE CAPS FOR WINTERIZATION. INSTALL PER MANUFACTURER'S RECOMMENDATIONS. PROVIDE CAPS FOR WINTERIZATION. PROVIDE BONDING AS REQUIRED PER NEC 680.			
9	GUSHER SPRAY	4	9 / SP600 + 5 / SP601	WATERPLAY GUSHER 0010-7492
	REMARKS: MAXIMUM WATER VELOCITY FOR INTERACTIVE PLAY IS 20 FT./SEC. INSTALL PER MANUFACTURER'S INSTRUCTIONS AND AT ANGLE AS SHOWN ON DETAIL. PROVIDE THICKENED SLAB, FOOTING OR LEVELING PAD AS REQUIRED PER MANUFACTURER'S INSTALLATION RECOMMENDATIONS. PROVIDE BONDING AS REQUIRED PER NEC 680.			
10	COLUMN JET	6	10 / SP600	CRYSTAL FOUNTAINS NLC-075
	REMARKS: ADJUST NOZZLES FOR A SPRAY HEIGHT OF 6'. FIELD VERIFY SPRAY HEIGHT WITH LANDSCAPE ARCHITECT. MAXIMUM WATER VELOCITY FOR INTERACTIVE PLAY IS 20 FT./SEC. INSTALL PER MANUFACTURER'S RECOMMENDATIONS. PROVIDE CAPS FOR WINTERIZATION. PROVIDE BONDING AS REQUIRED PER NEC 680. PROVIDE THICKENED SLAB, FOOTING OR LEVELING PAD AS REQUIRED PER MANUFACTURER'S INSTALLATION RECOMMENDATIONS.			
11	WATER WEAVE NOZZLE	1	11 / SP600	CRYSTAL FOUNTAINS NWW301
	REMARKS: ADJUST NOZZLES TO A 7 FOOT VERTICAL HEIGHT (MAX 8 FEET). FIELD VERIFY SPRAY HEIGHT WITH ARCHITECT. MAXIMUM WATER VELOCITY FOR INTERACTIVE PLAY IS 20 FT./SEC. INSTALL PER MANUFACTURER'S RECOMMENDATIONS. PROVIDE CAPS FOR WINTERIZATION. INSTALL PER MANUFACTURER'S RECOMMENDATIONS. PROVIDE BONDING AS REQUIRED PER NEC 680. SEE DETAIL FOR ADDITIONAL REQUIREMENTS			
12	GROUP VOLCANO NOZZLE	1	12 / SP600	WATERPLAY GROUP VOLCANO 0010-7495
	REMARKS: ADJUST NOZZLES TO A 7 FOOT VERTICAL HEIGHT (MAX 8 FEET). FIELD VERIFY SPRAY HEIGHT WITH ARCHITECT. MAXIMUM WATER VELOCITY FOR INTERACTIVE PLAY IS 20 FT./SEC. INSTALL PER MANUFACTURER'S RECOMMENDATIONS. PROVIDE CAPS FOR WINTERIZATION. INSTALL PER MANUFACTURER'S RECOMMENDATIONS. PROVIDE BONDING AS REQUIRED PER NEC 680. SEE DETAIL FOR ADDITIONAL REQUIREMENTS			
13	TULIP SPRAY	7	1 / SP601 + 4 / SP601	WATERPLAY TULIP SPRAY 0010-7489
	REMARKS: MAXIMUM WATER VELOCITY FOR INTERACTIVE PLAY IS 20 FT./SEC. INSTALL PER MANUFACTURER'S RECOMMENDATIONS. PROVIDE CAPS FOR WINTERIZATION. INSTALL PER MANUFACTURER'S RECOMMENDATIONS. PROVIDE BONDING AS REQUIRED PER NEC 680. SEE DETAIL FOR ADDITIONAL REQUIREMENTS			
14	BUTTERCUP SPRAY	2	2 / SP601 + 7 / SP601	WATERPLAY BUTTERCUP SPRAY 0010-7474
	REMARKS: MAXIMUM WATER VELOCITY FOR INTERACTIVE PLAY IS 20 FT./SEC. INSTALL PER MANUFACTURER'S RECOMMENDATIONS. PROVIDE CAPS FOR WINTERIZATION. INSTALL PER MANUFACTURER'S RECOMMENDATIONS. PROVIDE BONDING AS REQUIRED PER NEC 680. SEE DETAIL FOR ADDITIONAL REQUIREMENTS			
15	ACTIVATION BOLLARD	2	3 / SP601 + 6 / SP601	WATERPLAY ACTIVATOR POWER POST 0010-1854
	REMARKS: PROVIDE WIRING AND CONDUIT AS REQUIRED FOR CONNECTION TO THE CONTROLLER WHICH IS LOCATED IN THE EQUIPMENT ROOM. PROVIDE THICKENED SLAB, FOOTING OR LEVELING PAD AS REQUIRED PER MANUFACTURER'S INSTALLATION RECOMMENDATIONS. PROVIDE BONDING AS REQUIRED PER NEC 680. PROVIDE COLOR CHOICES TO LANDSCAPE ARCHITECT FOR SELECTION.			
16	WIND SENSOR AND CONTROLLER	1	8 / SP410	CRYSTAL FOUNTAINS #ECW-100
	REMARKS: NOT SHOWN ON PLAN. LOCATE WIND SENSOR IN LOCATION THAT EXPERIENCES SIMILAR WIND AS FEATURE. INSTALL PER MANUFACTURER'S RECOMMENDATIONS. SEE ELECTRICAL PLAN. VERIFY WITH LANDSCAPE ARCHITECT FOR LOCATION. ELECTRICAL CONTRACTOR SHALL PROVIDE CONDUIT FROM WIND SENSOR TO WIND CONTROLLER LOCATED IN EQUIPMENT ROOM PER MANUFACTURER'S RECOMMENDATIONS. WIND SENSOR PROVIDED WITH 300 FEET OF CABLE. WIND SENSOR CONTROLLER WIRED TO ANIMATION CONTROL PANEL.			
16 B	DECK MOUNTED INTERMEDIATE JUNCTION BOX	AS REQUIRED	9 / SP410	CRYSTAL FOUNTAINS #EBN-104-C
	REMARKS: NOT SHOWN ON PLAN. DECK MOUNTED JUNCTION BOX WITH SIDE OUTLET PROVIDED BY SPLASH PAD CONTRACTOR. INSTALLATION, CONDUIT, WIRING AND CONNECTIONS BY ELECTRICAL CONTRACTOR PER NEC ARTICLE 680. VERIFY LOCATION OF J-BOX WITH LANDSCAPE ARCHITECT. JUNCTION BOX SHALL BE FILLED WITH AN APPROVED RE-ENTRERABLE ENCAPSULANT POTTING COMPOUND TO PREVENT MOISTURE FROM ENTERING OR PASSING THROUGH THE BOX.			

SPLASH PAD STRUCTURE AND FINISH

MARK	DESCRIPTION	QUANTITY	DETAIL	REQUIREMENT
17	WATER FEATURE SURFACE/FINISH	PER PLAN	A/B / SP500	NON-SLIP CONCRETE W/ XYPEX WATERPROOFING ADMIXTURE
	REMARKS: REINFORCED CONCRETE WITH NON-SLIP, STIFF BROOM FINISH OR EQUIVALENT, WITH REQUIRED CONTROL JOINTS. SEE LANDSCAPE ARCHITECTURAL PLANS FOR PATTERNS AND REQUIRED CONCRETE COLORS. CONCRETE SHALL HAVE XYPEX OR EQUIVALENT ADDITIVE FOR WATERPROOFING. XYPEX ADMIXTURE SHALL BE PROVIDED AT THE BATCH PLANT. PROVIDE A SUBMITTAL FOR THE CONCRETE MIX. SLAB SHALL BE MINIMUM 6" THICK SLAB WITH #4 NON-ENCAPSULATED BARS AT 12" O.C. PROVIDE ADDITIONAL CONCRETE THICKNESS. SUPPORT FOR NOZZLE NICHES PER DETAILS. CONCRETE SPLASH PAD CONTRACTOR SHALL SUBMIT 3' x 3' MOCK-UPS TO LANDSCAPE ARCHITECT FOR APPROVAL OF FINISH AND COLOR.			
18	PERIMETER EXPANSION JOINT	SPLASH PAD PERIMETER	2 / SP501	W.R. MEADOWS DECK-O-FOAM AND DECK-O-SEAL
	REMARKS: PROVIDE 1/2" WIDE DECK-O-FOAM EXPANSION JOINT AROUND PERIMETER OF SPLASH PAD (RIVER CREST). PROVIDE WITH DECK-O-SEAL BACKER ROD AND POLYSULPHIDE SEALANT. EXPANSION JOINT AND SEALANT SHALL BE RESISTANT TO THE EFFECTS OF CHEMICALLY TREATED WATER (AS MANUFACTURED BY W.R. MEADOWS). INSTALL EXPANSION JOINT AND SEALANT PER MANUFACTURER'S RECOMMENDATIONS. SEALANT COLOR SHALL MATCH SURROUNDING CONCRETE. PROVIDE COLOR SAMPLES TO OWNER FOR SELECTION.			
19	CONTROL JOINT	SEE LANDSCAPE ARCHITECTURAL PLANS	3 / SP501	CONTROL JOINT WITH POLYSULPHIDE SEALANT
	REMARKS: NOT SHOWN ON PLAN. SEE DETAIL FOR INSTALLATION INSTRUCTIONS. SEE ARCHITECTURAL PLANS FOR LOCATIONS. SEALANT COLOR SHALL MATCH SURROUNDING CONCRETE. PROVIDE COLOR SAMPLES TO OWNER FOR SELECTION.			
20	COLD JOINTS	SEE PLAN SHEET SP201	4 / SP501	COLD JOINT WR MEADOWS JOINT SYSTEM
	REMARKS: NOT SHOWN ON PLAN. LOCATE ACROSS FEATURE RUNNEL EVERY 15' MAX ALONG FEATURE LENGTH AND ADDITIONAL COLD JOINTS AS REQUIRED PER THE DISCRETION OF THE CONTRACTOR. SEE DETAIL FOR INSTALLATION INSTRUCTIONS. SEALANT COLOR SHALL MATCH SURROUNDING CONCRETE. PROVIDE COLOR SAMPLES TO LANDSCAPE ARCHITECT FOR SELECTION.			

UTILITIES AND ITEMS PROVIDED BY OTHERS

(ITEMS TO BE DESIGNED, ENGINEERED, AND SPECIFIED BY OTHER CONSULTANTS)

MARK	DESCRIPTION	QUANTITY	DETAIL	REQUIREMENT
31	TREE FEATURE	FIVE-TRUNK TREE CANOPY		SEE LANDSCAPE ARCHITECTURAL DETAILS AND WATERPLAY SHOP DRAWINGS
	REMARKS: TREE TBD. SEE LANDSCAPE ARCHITECTURAL PLANS. PROVIDE BONDING IF REQUIRED PER NEC 680.			
32	DECORATIVE BOULDERS	SEE LANDSCAPE ARCHITECT PLANS		SEE LANDSCAPE ARCHITECTURAL DETAILS
	REMARKS: SEE ARCHITECT PLANS. SEE ROCK/BOULDER NOTE ON SHEET SP100. THICKEN FEATURE CONCRETE AS NECESSARY UNDER BOULDERS. LANDSCAPE ARCHITECT SHALL DIRECT THE SELECTION, POSITIONING AND INSTALLATION OF BOULDERS. BOULDERS SHALL HAVE FLAT BOTTOMS, BE STABLE, AND NOT TOTTER. CUT THE BOTTOM OF BOULDERS TO MATCH RIVER SURFACE CONTOURS.			

blu line designs
planning | landscape architecture | design
8719 S. Sandy Parkway
Sandy, UT 84070
p 801.913.7994

CLIENT

FARMINGTON CITY
CONTACT: SYLVIA CLARK
PH: 801.939.9295
EMAIL:
SCLARK@FARMINGTON.UTAH.GOV

FARMINGTON

Water Design Inc
6740 South 1300 East
Salt Lake City, UT 84121
8012614009
www.waterdesigninc.com

The entire contents of the attached documents, including all sketches, plans, studies, drawings, schedules and specifications and all copyrights therein are, and shall remain the property of Water Design Inc. Incorporated. The documents and their contents may not be used, photocopied or reproduced digitally, electronically or in any other manner without the express prior written consent of Water Design Incorporated.

IVY ACRES PARK

1397 WEST COOK LANE
FARMINGTON, UT

REVISIONS

NO.	symmetry	DESCRIPTION

LICENSED PROFESSIONAL ENGINEER
CHARLES ROSS ANDERSON
145589-2203
STATE OF UTAH
03/06/2024

Designed By:	BP
Drawn By:	TOS
Date:	03/06/2024
Checked By:	BA
Project No:	23-747FS

Drawing Title

INTERACTIVE WATER FEATURE SCHEDULES

Drawing number

SP201

BID SET

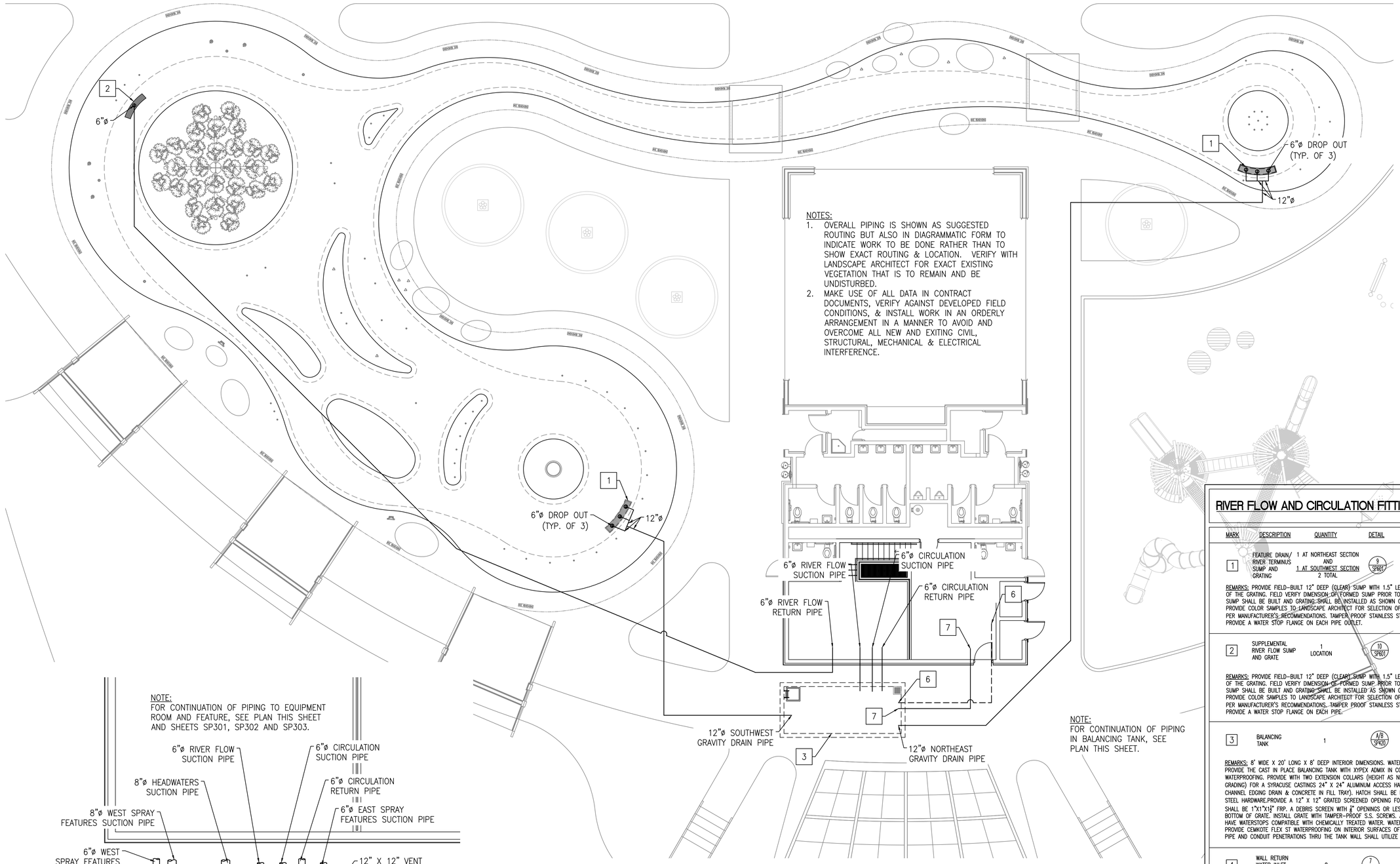

NOTES:
1. OVERALL PIPING IS SHOWN AS SUGGESTED ROUTING BUT ALSO IN DIAGRAMMATIC FORM TO INDICATE WORK TO BE DONE RATHER THAN TO SHOW EXACT ROUTING & LOCATION. VERIFY WITH LANDSCAPE ARCHITECT FOR EXACT EXISTING VEGETATION THAT IS TO REMAIN AND BE UNDISTURBED.
2. MAKE USE OF ALL DATA IN CONTRACT DOCUMENTS, VERIFY AGAINST DEVELOPED FIELD CONDITIONS, & INSTALL WORK IN AN ORDERLY ARRANGEMENT IN A MANNER TO AVOID AND OVERCOME ALL NEW AND EXITING CIVIL, STRUCTURAL, MECHANICAL & ELECTRICAL INTERFERENCE.

NOTE:
FOR CONTINUATION OF PIPING IN BALANCING TANK, SEE PLAN THIS SHEET.

WATER FEATURE RIVER FLOW, CIRCULATION AND DRAIN PIPING PLAN
SCALE: 1/8"=1'-0"

NOTE:
FOR CONTINUATION OF PIPING TO EQUIPMENT ROOM AND FEATURE, SEE PLAN THIS SHEET AND SHEETS SP301, SP302 AND SP303.

BALANCING TANK PIPING PLAN
SCALE: 1/4"=1'-0"

BALANCING TANK CHECK VALVE NOTES:
CHECK VALVES (A.K.A. FOOT VALVES) (GEORGE FISCHER OR APPROVED EQUAL) SHALL BE PROVIDED IN THE BALANCING TANK FOR CIRCULATION PUMP SUCTION PIPE AND BOTH FEATURE SUCTION PIPES. (NOT SHOWN ON PLAN)

CONFINED SPACE SAFETY NOTE:
THE GENERAL CONTRACTOR IS RESPONSIBLE FOR PROVIDING A CONFINED SPACE SAFETY PLAN PER OSHA REQUIREMENTS PRIOR TO WORK BEING PERFORMED WITHIN THE CONFINED SPACE OF CONCRETE COVERED BALANCING TANK.

SEE SHEET SP301 FOR PIPING NOTES AND HEADWATERS/ENDWATERS PIPING PLAN AND SP302 FOR SPRAY FEATURES PIPING PLAN.

RIVER FLOW AND CIRCULATION FITTING SCHEDULE

MARK	DESCRIPTION	QUANTITY	DETAIL	REQUIREMENT
1	FEATURE DRAIN/ RIVER TERMINUS SUMP AND GRATING	1 AT NORTHEAST SECTION AND 1 AT SOUTHWEST SECTION 2 TOTAL	9 SP601	DALDORADO 14" WIDE PERPENDICULAR RADIAL GRATING
REMARKS: PROVIDE FIELD-BUILT 12" DEEP (CLEAR) SUMP WITH 1.5" LEDGE FOR THE INSTALLATION OF THE GRATING. FIELD VERIFY DIMENSION OF FORMED SUMP PRIOR TO ORDERING THE GRATING. SUMP SHALL BE BUILT AND GRATING SHALL BE INSTALLED AS SHOWN ON THE PLANS AND DETAIL. PROVIDE COLOR SAMPLES TO LANDSCAPE ARCHITECT FOR SELECTION OF GRATING. INSTALL GRATING PER MANUFACTURER'S RECOMMENDATIONS. TAMPER PROOF STAINLESS STEEL FASTENERS REQUIRED. PROVIDE A WATER STOP FLANGE ON EACH PIPE OUTLET.				
2	SUPPLEMENTAL RIVER FLOW SUMP AND GRATE	1 LOCATION	10 SP601	DALDORADO 12" WIDE PERPENDICULAR RADIAL GRATING
REMARKS: PROVIDE FIELD-BUILT 12" DEEP (CLEAR) SUMP WITH 1.5" LEDGE FOR THE INSTALLATION OF THE GRATING. FIELD VERIFY DIMENSION OF FORMED SUMP PRIOR TO ORDERING THE GRATING. SUMP SHALL BE BUILT AND GRATING SHALL BE INSTALLED AS SHOWN ON THE PLANS AND DETAIL. PROVIDE COLOR SAMPLES TO LANDSCAPE ARCHITECT FOR SELECTION OF GRATING. INSTALL GRATING PER MANUFACTURER'S RECOMMENDATIONS. TAMPER PROOF STAINLESS STEEL FASTENERS REQUIRED. PROVIDE A WATER STOP FLANGE ON EACH PIPE.				
3	BALANCING TANK	1	A/8 SP420	8' WIDE x 20 LONG x 8' DEEP PRECAST DURACRETE, AMCOR OLDCASTLE OR EQUAL
REMARKS: 8' WIDE X 20' LONG X 8' DEEP INTERIOR DIMENSIONS. WATER FEATURE CONTRACTOR SHALL PROVIDE THE CAST IN PLACE BALANCING TANK WITH XYPEX ADMIX IN CONCRETE AND WITH EXTERIOR WATERPROOFING. PROVIDE WITH TWO EXTENSION COLLARS (HEIGHT AS NEEDED FOR FINAL SITE GRADING) FOR A SYRACUSE CASTINGS 24" X 24" ALUMINUM ACCESS HATCH (WITH WATERPROOF CHANNEL EDGING DRAIN & CONCRETE IN FILL TRAY). HATCH SHALL BE LOCKABLE WITH STAINLESS STEEL HARDWARE.PROVIDE A 12" X 12" GRATED SCREENED OPENING FOR VENTILATION. VENT GRATE SHALL BE 1"x1"x1/4" FRP. A DEBRIS SCREEN WITH 1" OPENINGS OR LESS SHALL BE SECURED TO THE BOTTOM OF GRATE. INSTALL GRATE WITH TAMPER-PROOF S.S. SCREWS. ANY REQUIRED JOINTS SHALL HAVE WATERSTOPS COMPATIBLE WITH CHEMICALLY TREATED WATER. WATER FEATURE CONTRACTOR SHALL PROVIDE CEMCOTE FLEX ST WATERPROOFING ON INTERIOR SURFACES OF THE BALANCING TANK. ALL PIPE AND CONDUIT PENETRATIONS THRU THE TANK WALL SHALL UTILIZE MODULAR LINK SEALS.				
4	WALL RETURN WATER INLET FITTING	8	7 SP416	CUSTOM PVC
REMARKS: CAP A 1 1/2"ø PIPE AND DRILL A 1" HOLE IN CAP. SPACE INLETS PER PLAN LAYOUT/ DIMENSIONS.				
5	PIPE WALL SLEEVE WITH MODULAR SEAL	ALL PENETRATIONS AT BALANCING TANK AND EQUIPMENT ROOM		SEE SCHEDULE SHEET SP401
6	WATER LEVEL SENSOR AND CONDUIT	1	N/A	SENSOR IN SEALED 2"ø PVC PIPE
REMARKS: MOUNT SENSOR IN SEALED PVC CHAMBER IN BALANCING TANK. SECURE SEALED CHAMBER TO BALANCING TANK WALL WITH STAINLESS STEEL HARDWARE. WIRE SHALL ENTER CHAMBER NEAR TOP OF TANK. ROUTE WIRE IN CONDUIT ABOVE MAXIMUM WATER LEVEL FROM SENSOR TO CONTROLLER IN EQUIPMENT ROOM. SEAL CONDUIT AND PENETRATION.				
7	FILL LINE	1	SEE POTABLE WATER FILL SCHEMATIC (SP410)	2"ø PIPE
REMARKS: TERMINATE FILL LINE AT BALANCING TANK. LOCATE SENSOR IN BALANCING TANK. WATER LEVEL CONTROLLER LOCATED IN EQUIPMENT ROOM.				

BID SET

blu line designs
planning | landscape architecture | design
8719 S. Sandy Parkway
Sandy, UT 84070
p 801.913.7994

CLIENT
FARMINGTON CITY
CONTACT: SYLVIA CLARK
PH: 801.939.9295
EMAIL:
SCLARK@FARMINGTON.UTAH.GOV

FARMINGTON

Water Design Inc
6740 South 1300 East
Salt Lake City, UT 84121
8012614009
www.waterdesigninc.com

The entire contents of the attached documents, including all sketches, plans, studies, drawings, schedules and specifications and all copyrights therein are, and shall remain the property of Water Design Inc. Incorporated. The documents and their contents may not be used, photocopied or reproduced digitally, electronically or in any other manner without the express prior written consent of Water Design Incorporated.

IVY ACRES PARK
1397 WEST COOK LANE
FARMINGTON, UT

REVISIONS

NO.	APPROVED	DESCRIPTION

LICENSED PROFESSIONAL ENGINEER
CHARLES ROSS ANDERSON
145589-2203
STATE OF UTAH
03/06/2024

Designed By:	BP
Drawn By:	TOS
Date:	03/06/2024
Checked By:	BA
Project No:	23-747FS

Drawing Title
RIVER FLOW, CIRCULATION AND DRAIN PIPING PLAN

Drawing number
SP300

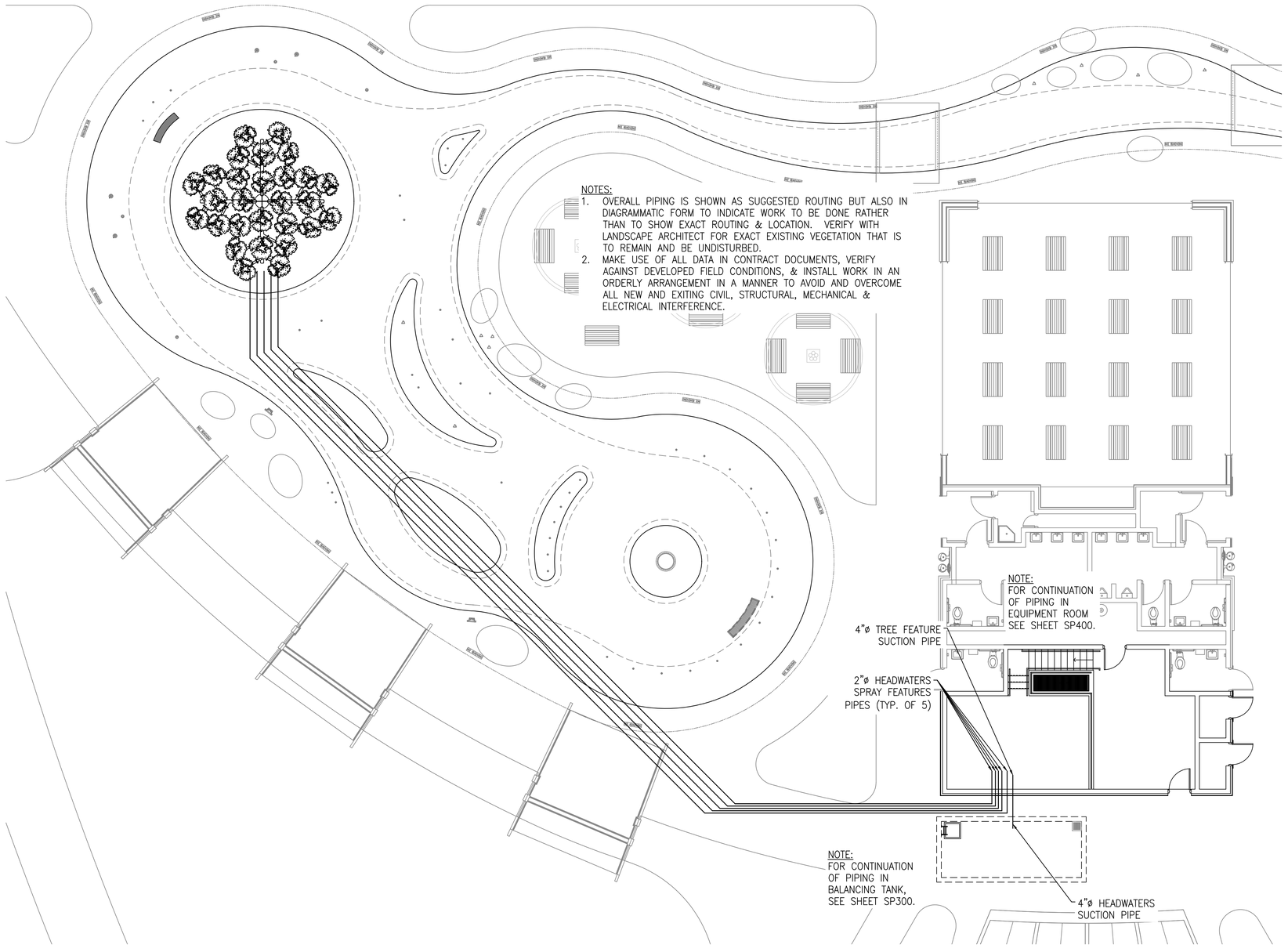

WATER FEATURE HEADWATERS PIPING PLAN

SCALE: 1/8"=1'-0"

INTERACTIVE WATER FEATURE PIPING NOTES:

1. ALL PIPING SHALL BE NSF APPROVED (ANSI/NSF 14), SCHEDULE 40 PVC (UNLESS OTHERWISE NOTED). FLEX PIPING AND HEAT BENDING RIGID PIPING IS NOT ALLOWED AS PART OF THIS DESIGN.
2. ALL FEATURE SUPPLY PIPING SHALL BE NSF APPROVED, SCHEDULE 80 PVC (UNLESS OTHERWISE NOTED
3. ALL PIPING SHALL BE IN ACCORDANCE WITH THE UTAH STATE PLUMBING CODE AND UTAH DEPARTMENT OF PUBLIC HEALTH CODE, THE A.S.T.M. DESIGNATION NUMBER D-1785, AND THE NSF SEAL FOR POTABLE WATER.
4. POOL CONTRACTOR SHALL MAKE EVERY EFFORT TO CURTAIL THE USE OF FITTINGS TO REDUCE HEAD.
5. PIPING SHALL BE INSTALLED WITHOUT AIR ENTRAPPING HIGH POINTS OR REVERSE SLOPES, I.E. ON DISCHARGE LINES, NO DESCENDING RUNS BEYOND HORIZONTAL OR ASCENDING RUNS; ON SUCTION LINES, NO DESCENDING RUNS BEYOND ASCENDING RUNS.
6. ALL UNDERGROUND PRESSURE AND SUCTION PIPING SHALL SLOPE A MINIMUM OF 1%.
7. PIPING SHALL BE INSTALLED TO PREVENT FREEZING. WINTERIZE PIPING DURING WINTER MONTHS WHEN POOL IS NOT IN OPERATION.
8. ALL PIPING SHALL BE TESTED WITH AN INDUCED STATIC HYDRAULIC PRESSURE TEST AT MINIMUM 25 POUNDS PER SQUARE INCH (PSI) FOR 24 HOURS OR PER WRITTEN SPECIFICATIONS IF PROVIDED.
9. PIPING SHALL CARRY 100% OF RECIRCULATION RATE AT A VELOCITY NOT TO EXCEED 6' PER SECOND.
10. ALL PIPING DESIGNED FOR 6' PER SECOND MAXIMUM SUCTION, 10' PER SECOND MAXIMUM PRESSURE, AND 3' PER SECOND MAXIMUM GRAVITY.
11. VERIFY PIPE SIZES WITH THE EQUIPMENT ROOM PLAN AND SCHEMATIC. IF THERE ARE ANY DISCREPANCIES, REPORT THEM TO THE ARCHITECT/ENGINEER IMMEDIATELY.
12. POOL CONTRACTOR SHALL COORDINATE ALL WORK WITH ARCHITECTURAL, MECHANICAL, ELECTRICAL AND STRUCTURAL DRAWINGS.
13. OVERALL PIPING IS SHOWN IN DIAGRAMMATIC FORM TO INDICATE WORK TO BE DONE RATHER THAN TO SHOW EXACT ROUTING & LOCATION. MAKE USE OF ALL DATA IN CONTRACT DOCUMENTS, VERIFY AGAINST DEVELOPED FIELD CONDITIONS, & INSTALL WORK IN AN ORDERLY ARRANGEMENT IN A MANNER TO OVERCOME STRUCTURAL, MECHANICAL & ELECTRICAL INTERFERENCE.
14. FEATURE NOZZLE WATER SPRAYS SHALL NOT EXCEED 6 FEET IN HEIGHT, TO STAY WITHIN THE REQUIRED 20' PER SECOND VELOCITY.

SEE SHEET SP300 FOR RIVER FLOW/CIRCULATION/DRAIN PIPING PLAN AND SP302 FOR SPRAY FEATURES PIPING PLAN.

blu line designs
planning | landscape architecture | design
8719 S. Sandy Parkway
Sandy, UT 84070
p 801.913.7994

CLIENT

FARMINGTON CITY
CONTACT: SYLVIA CLARK
PH: 801.939.9295
EMAIL:
SCLARK@FARMINGTON.UTAH.GOV

FARMINGTON

Water Design Inc
6740 South 1300 East
Salt Lake City, UT 84121
8012614009
www.waterdesigninc.com

The entire contents of the attached documents, including all sketches, plans, studies, drawings, schedules and specifications and all copyrights therein are, and shall remain the property of Water Design Incorporated. The documents and their contents may not be used, photocopied or reproduced digitally, electronically or in any other manner without the express prior written consent of Water Design Incorporated.

IVY ACRES PARK

1397 WEST COOK LANE
FARMINGTON, UT

REVISIONS

NO.	BY/PHASING	DESCRIPTION

LICENSED PROFESSIONAL ENGINEER
CHARLES ROSS ANDERSON
145589-2203
STATE OF UTAH
03/06/2024

Designed By:	BP
Drawn By:	TOS
Date:	03/06/2024
Checked By:	BA
Project No:	23-747FS

Drawing Title

FEATURE HEADWATERS & ENDWATERS PIPING PLAN

Drawing number

SP301

BID SET

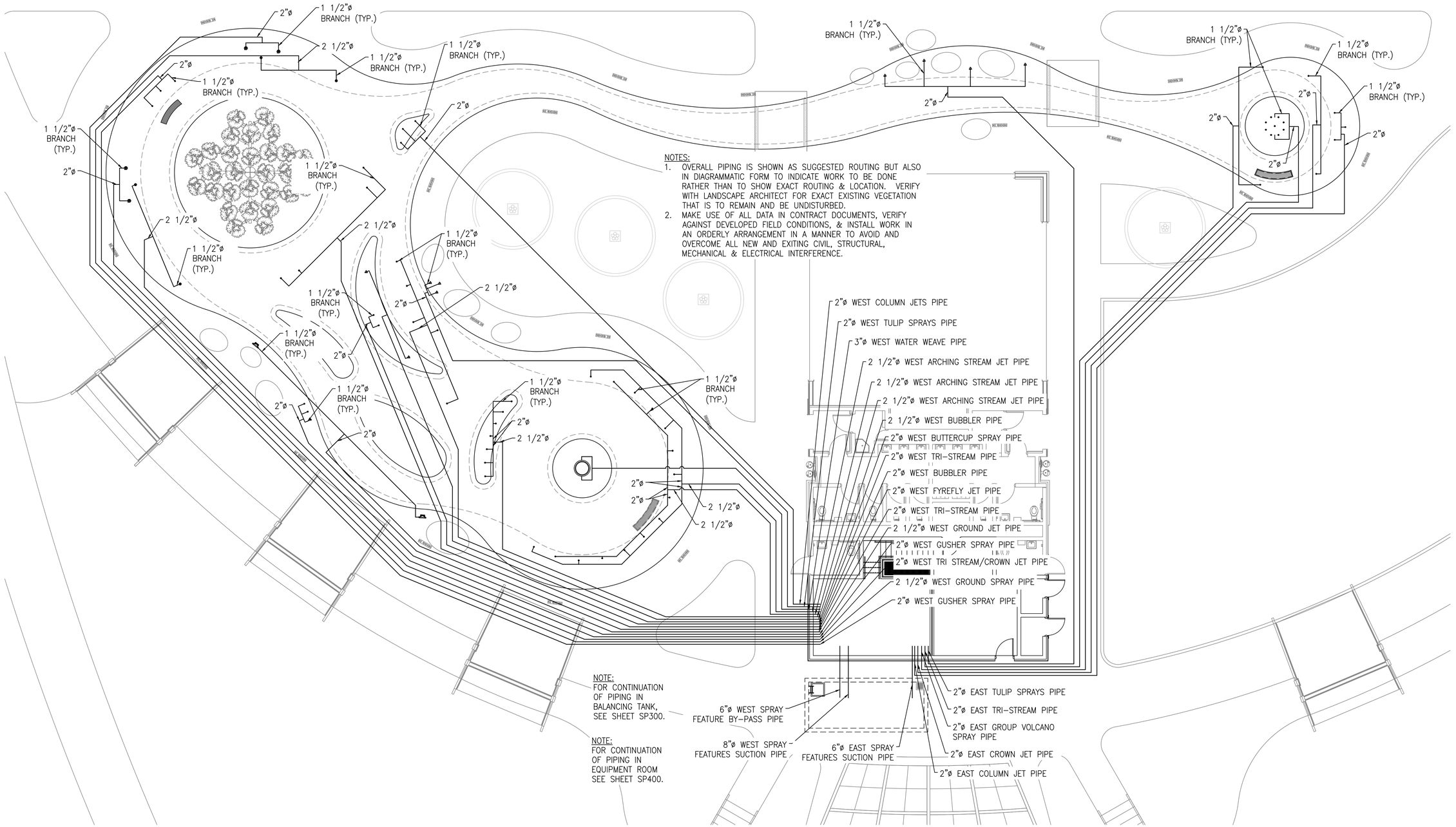

NOTES:

1. OVERALL PIPING IS SHOWN AS SUGGESTED ROUTING BUT ALSO IN DIAGRAMMATIC FORM TO INDICATE WORK TO BE DONE RATHER THAN TO SHOW EXACT ROUTING & LOCATION. VERIFY WITH LANDSCAPE ARCHITECT FOR EXACT EXISTING VEGETATION THAT IS TO REMAIN AND BE UNDISTURBED.
2. MAKE USE OF ALL DATA IN CONTRACT DOCUMENTS, VERIFY AGAINST DEVELOPED FIELD CONDITIONS, & INSTALL WORK IN AN ORDERLY ARRANGEMENT IN A MANNER TO AVOID AND OVERCOME ALL NEW AND EXITING CIVIL, STRUCTURAL, MECHANICAL & ELECTRICAL INTERFERENCE.

SPRAY FEATURES PIPING PLAN

SCALE: 1/8"=1'-0"

SEE SHEET SP300 FOR RIVER FLOW/ CIRCULATION/DRAIN PIPING PLAN AND SP301 FOR HEADWATERS/ENDWATERS PIPING PLAN.

BID SET

blu line designs
planning | landscape architecture | design
8719 S. Sandy Parkway
Sandy, UT 84070
p 801.913.7994

CLIENT

FARMINGTON CITY
CONTACT: SYLVIA CLARK
PH: 801.939.9295
EMAIL:
SCLARK@FARMINGTON.UTAH.GOV

FARMINGTON

Water Design Inc
6740 South 1300 East
Salt Lake City, UT 84121
8012614009
www.waterdesigninc.com

The entire contents of the attached documents, including all sketches, plans, studies, drawings, schedules and specifications and all copyrights therein are, and shall remain the property of Water Design Incorporated. The documents and their contents may not be used, photocopied or reproduced digitally, electronically or in any other manner without the express prior written consent of Water Design Incorporated.

IVY ACRES PARK

1397 WEST COOK LANE
FARMINGTON, UT

REVISIONS

NO.	yy/mm/dd	DESCRIPTION

LICENSED PROFESSIONAL ENGINEER
CHARLES ROSS ANDERSON
145589-2203
STATE OF UTAH
03/06/2024

Designed By:	BP
Drawn By:	TOS
Date:	03/06/2024
Checked By:	BA
Project No:	23-747FS

Drawing Title

SPRAY FEATURES PIPING PLAN

Drawing number

SP302

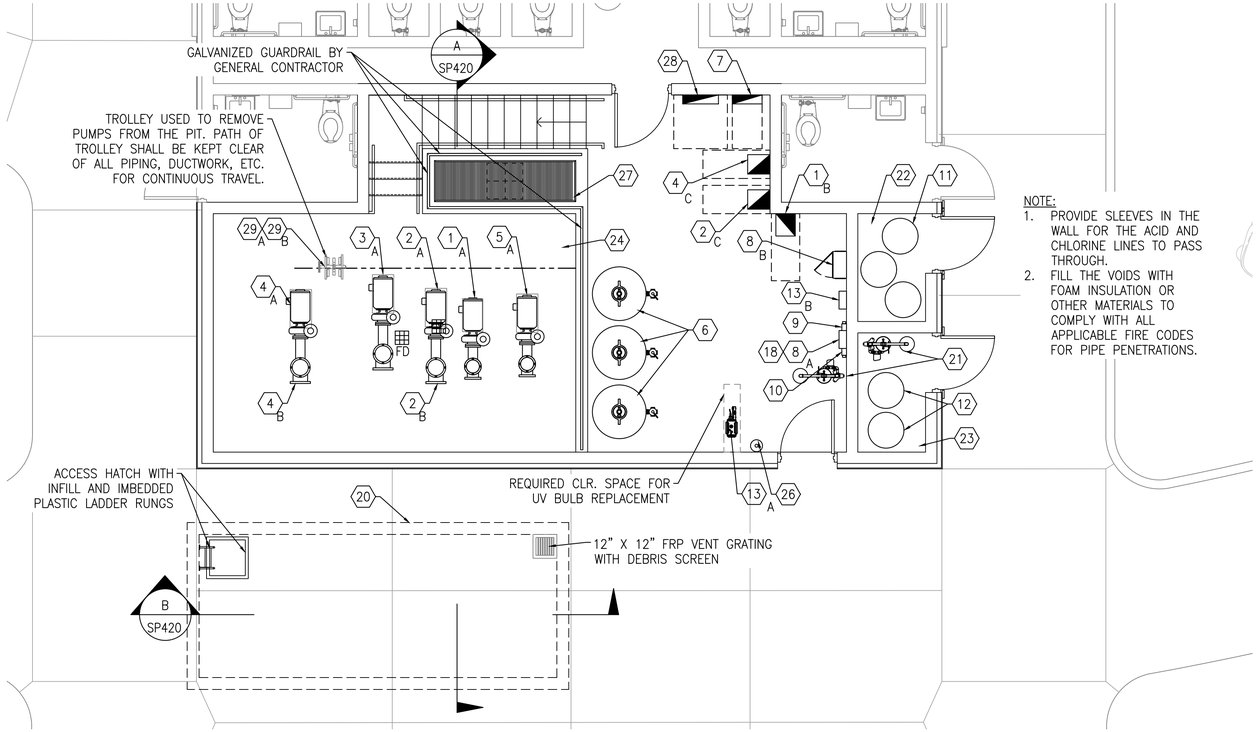

WATER FEATURE EQUIPMENT ROOM PLAN

SCALE: 1/4"=1'-0"

SYMBOL LEGEND			
	VALVE		CHECK VALVE
	VALVE		CHECK VALVE
	VALVE		CHECK VALVE
	VALVE		CHECK VALVE

SEE SHEET SP401 FOR CIRCULATION EQUIPMENT SCHEDULE AND HEXAGON CALLOUTS

EQUIPMENT ROOM NOTES:

1. FILTRATION AND CHEMICAL EQUIPMENT SHALL BE NATIONAL SANITATION FOUNDATION (NSF) APPROVED.
2. EQUIPMENT SHALL BE INSTALLED ON SLABS WITH MINIMUM 4" THICKNESS AND AS REQUIRED TO WITHSTAND THE LOADS ASSOCIATED WITH THE POOL EQUIPMENT AND PIPING.
3. COORDINATE WITH ALL OTHER TRADES & VERIFY EXACT LOCATION OF POOL EQUIPMENT.
4. SEE OVERALL PIPING PLAN TO VERIFY PIPE SIZES AND FOR CONTINUATION OF PIPING. IF THERE ARE ANY DISCREPANCIES, REPORT THEM IMMEDIATELY TO THE ARCHITECT/ENGINEER.
5. POOL CONTRACTOR SHALL IDENTIFY ALL PIPING AND VALVES BY COLOR CODING OR LABELS AND DIRECTION OF FLOW ARROWS IN ACCORDANCE WITH LOCAL HEALTH CODE.
6. REDUCER FITTINGS SHALL BE USED WHERE PIPE SIZES CHANGE.
7. NO COMMON PIPING OR FITTING ON THE SUCTION SIDE OF THE PUMP IS TO BE SMALLER THAN THE LARGEST SINGLE ELEMENT CONNECTED. DOWNSIZING AND UPSIZING IS TO BE DONE AT THE THROATS OF THE PUMP PORTS.
8. ALL VALVES SHALL HAVE A MINIMUM PRESSURE RATING OF 125 PSI.
9. ALL TRADES SHALL KEEP SPACE ABOVE POOL EQUIPMENT CLEAR FOR THEIR SERVICING.
10. HAIR AND LINT STRAINER OPENINGS SHALL BE NO MORE THAN 1/8". THE HAIR AND LINT STRAINER MUST PROVIDE A FREE FLOW CAPACITY OF AT LEAST FOUR TIMES THE AREA OF THE PUMP SUCTION LINE.
11. FILTER SHALL BE PROVIDED WITH THE FOLLOWING APPROPRIATELY LOCATED ACCESSORIES: INFLUENT AND EFFLUENT PRESSURE GAUGES, BACKWASH SIGHT GLASS ON WASTE DISCHARGE LINE, AIR RELIEF VALVE AT THE HIGH POINT OF THE FILTER SYSTEM, AND A VALVED TANK DRAIN.
12. FLOWMETER SHALL BE PROVIDED IN THE INLET RETURN LINE AFTER FILTER AND BEFORE CHEMICAL INJECTION. INSTALL ON A STRAIGHT LENGTH OF PIPE AT A DISTANCE OF AT LEAST 10 PIPE DIAMETERS DOWNSTREAM AND 5 PIPE DIAMETERS UPSTREAM FROM ANY VALVE, ELBOW OR OTHER SOURCE OF TURBULENCE OR PER MANUFACTURER'S SPECIFICATIONS.
13. ALL BACKWASH SHALL BE TO AN APPROVED PLUMBING FIXTURE. ALL BACKWASH SHALL BE RECEIVED INTO THE SANITARY SEWER.
14. ALL SELF PRIMING CIRCULATING PUMPS SHALL BE INSTALLED NO MORE THAN 2'-0" ABOVE THE OPERATING WATER LEVEL OF THE POOL BEING SERVED. ALL NON-SELF PRIMING PUMPS SHALL BE INSTALLED BELOW THE WATER LEVEL OF THE POOL.
15. PROVIDE A COMBINATION VACUUM/PRESSURE GAUGE ON THE SUCTION SIDE OF ALL PUMPS.
16. PROVIDE A PRESSURE GAUGE ON THE DISCHARGE OF ALL PUMPS.
17. IF EQUIPMENT IS BELOW WATER LEVEL, ADD ISOLATION VALVES FOR EACH PIECE OF EQUIPMENT.
18. EYE WASH AND EMERGENCY SHOWER PROVIDED AND INSTALLED BY MECHANICAL. SEE "MECHANICAL AND PLUMBING ITEMS".

PIPE VALVE NOTES:

1. ALL VALVES FOR PIPING 3"ø AND SMALLER SHALL BE PVC BALL VALVES, ASAHI/ AMERICAN OMNI OR EQUAL.
2. ALL VALVES 4"ø AND LARGER SHALL BE BUTTERFLY VALVES ASAHI/ AMERICAN FOUNTAIN COMPATIBLE VALVES ("POOL PRO" OR EQUAL). BUTTERFLY VALVES ARE TO BE MANUFACTURED OF PVC WITH REINFORCED DISKS BUBBLE-TITE WITH STAINLESS STEEL SHAFTS.
3. VALVES 4"ø AND 6"ø SHALL BE LEVER OPERATED. VALVES 8"ø AND ABOVE SHALL BE GEAR OPERATED.
4. ALL CHECK VALVES SHALL BE THERMOPLASTIC (PVC OR CPVC), BUTTERFLY- OR FULL PORT SWING-TYPE, FLANGED ENDS OR WAFER STYLE CHECK VALVES, WITH PARTS INTENDED FOR TREATED, SWIMMING-POOL WATER. SIZE AS REQUIRED.

PIPE HANGER AND SUPPORT NOTES:

1. PIPE HANGERS: THE PIPE HANGERS SHALL BE ADJUSTABLE B-LINE FIGURE B3105 STAINLESS STEEL OR EQUAL.
2. SUPPORT SADDLES: PIPE SUPPORTS SHALL BE ADJUSTABLE B-LINE FIGURE B3092 STAINLESS STEEL SADDLE SUPPORT WITH FIGURE B3088T STAINLESS STEEL STAND OR APPROVED EQUAL.
3. UNI-STRUT: PIPES SHALL BE MOUNTED TO VERTICAL WALLS USING UNISTRUT AND PIPE CLAMPS.
4. PROVIDE FLEXIBLE GASKETS BETWEEN PIPE SUPPORTS/CLAMPS AND PIPES AS NEEDED FOR VIBRATION ISOLATION AND/OR SOUND ISOLATION.
5. PIPE HANGERS AND SUPPORTS SHALL BE CONSTRUCTED OF STAINLESS STEEL AND SHALL BE LOCATED AS NEEDED TO ADEQUATELY SUPPORT ALL PIPING AND COMPONENTS.
6. PVC PIPING SHALL NOT BE UNSUPPORTED FOR LENGTHS IN EXCESS OF SIX FEET. PROVIDE ADEQUATE SUPPORTS AND SPACING AS TO AVOID PIPE SAGGING BETWEEN SUPPORTS AND TO SUPPORT AGAINST THE EFFECTS OF WATER HAMMER.

DEFERRED SUBMITTAL:
1. ALL POOL PIPING LARGER THAN 3" MUST BE SUPPORTED FOR SEISMIC LOADS IN ACCORDANCE WITH THE INTERNATIONAL BUILDING CODE. THE INSTALLING CONTRACTOR IS RESPONSIBLE FOR THE DESIGN AND INSTALLATION OF ALL SEISMIC BRACING.
2. IF NEEDED, PROVIDE THE DETAILS AND ENGINEERING CALCULATIONS (WET STAMPED AND SIGNED) FOR ALL NON-STRUCTURAL COMPONENTS PERMANENTLY ATTACHED TO STRUCTURES AND THEIR SUPPORTS & ATTACHMENTS, DESIGNED TO RESIST THE EFFECTS OF EARTHQUAKE MOTIONS IN ACCORDANCE WITH ASCE 7-05. SUBMIT TO THE BUILDING DEPARTMENT AS A DEFERRED SUBMITTAL (IF REQUIRED BY BUILDING INSPECTOR).

WATER FEATURE ELECTRICAL INTERLOCKING NOTES:

ELECTRICAL INTERLOCKING BY ELECTRICAL CONTRACTOR. COORDINATE WITH POOL CONTRACTOR.

PROVIDE INTERLOCKING OF CIRCULATION EQUIPMENT PER FEATURE DRAWINGS AND SPECIFICATIONS. PROVIDE RELAY AND CONTROL WIRING IN 3/4" CONDUIT AS REQUIRED.

1. INTERLOCK THE CIRCULATION PUMP WITH ITS RESPECTIVE CHLORINE AND ACID FEED RELAYS. (IF THE CIRCULATION PUMP SHUTS OFF, THE POWER TO ALL CHLORINE AND ACID FEEDERS SHALL SHUT OFF ALSO.) INTERLOCKING SHALL BE ACCOMPLISHED THROUGH AN ELECTRICAL INTERLOCK CONSISTING OF BOTH:
   A. FLOW METER OR FLOW SWITCH AT THE CHEMICAL CONTROLLER; AND
   B. CHEMICAL FEEDERS WIRED ELECTRICALLY TO THE CIRCULATION SYSTEM. THIS MAY INCLUDE THE USE OF A DIFFERENTIAL PRESSURE SWITCH, A PUMP POWER MONITOR, OR OTHER SUITABLE MEANS.
2. INTERLOCK THE CIRCULATION PUMP WITH THE UV DISINFECTION SYSTEM CONTROL PANEL. (IF THE CIRCULATION PUMP SHUTS OFF, THE POWER TO THE UV SYSTEM CONTROL PANEL SHALL SHUT OFF ALSO.)
3. INTERLOCK THE WATER FEATURE CONTROLLER WITH ALL FEATURE PUMPS.

CONFINED SPACE SAFETY NOTE:

THE GENERAL CONTRACTOR IS RESPONSIBLE FOR PROVIDING A CONFINED SPACE SAFETY PLAN PER OSHA REQUIREMENTS PRIOR TO WORK BEING PERFORMED WITHIN THE CONFINED SPACE OF CONCRETE COVERED BALANCING TANK.

FEATURE PUMP NOTES:

TYPICAL AT EACH FEATURE PUMP: PROVIDE A VACUUM GAUGE JUST UPSTREAM FROM THE HAIR STRAINER AND A PRESSURE GAUGE JUST DOWNSTREAM FROM THE PUMP. BUT BEFORE THE FIRST VALVE. ALSO A PUMP ISOLATION VALVE SHALL BE PROVIDED ON THE DISCHARGE PIPE FROM THE PUMP PRIOR TO ANY FEATURE PUMP MANIFOLDS. IF A Y-STRAINER IS PROVIDED ON THE DISCHARGE PIPE PRIOR TO THE FEATURE PUMP MANIFOLD, AN ISOLATION VALVE SHALL BE PROVIDED BETWEEN THE MANIFOLD AND THE Y-STRAINER.

NOTE:
EACH SPRAY FEATURE SUPPLY PIPE SHALL HAVE A SOLENOID VALVE, A CONTROL VALVE AND A DRAIN LINE WITH VALVE. PLACE VALVES ON VERTICAL PIPES AS REQUIRED. (NOT SHOWN ON PLAN.)

NOTES:
1. OVERALL PIPING IS SHOWN AS SUGGESTED ROUTING BUT ALSO IN DIAGRAMMATIC FORM TO INDICATE WORK TO BE DONE RATHER THAN TO SHOW EXACT ROUTING & LOCATION. VERIFY WITH LANDSCAPE ARCHITECT FOR EXACT EXISTING VEGETATION THAT IS TO REMAIN AND BE UNDISTURBED.
2. MAKE USE OF ALL DATA IN CONTRACT DOCUMENTS, VERIFY AGAINST DEVELOPED FIELD CONDITIONS, & INSTALL WORK IN AN ORDERLY ARRANGEMENT IN A MANNER TO AVOID AND OVERCOME ALL NEW AND EXITING CIVIL, STRUCTURAL, MECHANICAL & ELECTRICAL INTERFERENCE.

NOTE:
AT FEATURE PUMPS, PROVIDE A VACUUM GAUGE JUST UPSTREAM FROM THE HAIR STRAINER AND A PRESSURE GAUGE JUST DOWNSTREAM FROM THE PUMP, BUT BEFORE THE FIRST VALVE.

NOTE:
FOR CONTINUATION OF PIPING TO WATER FEATURE, SEE SP300 SERIES SHEETS.

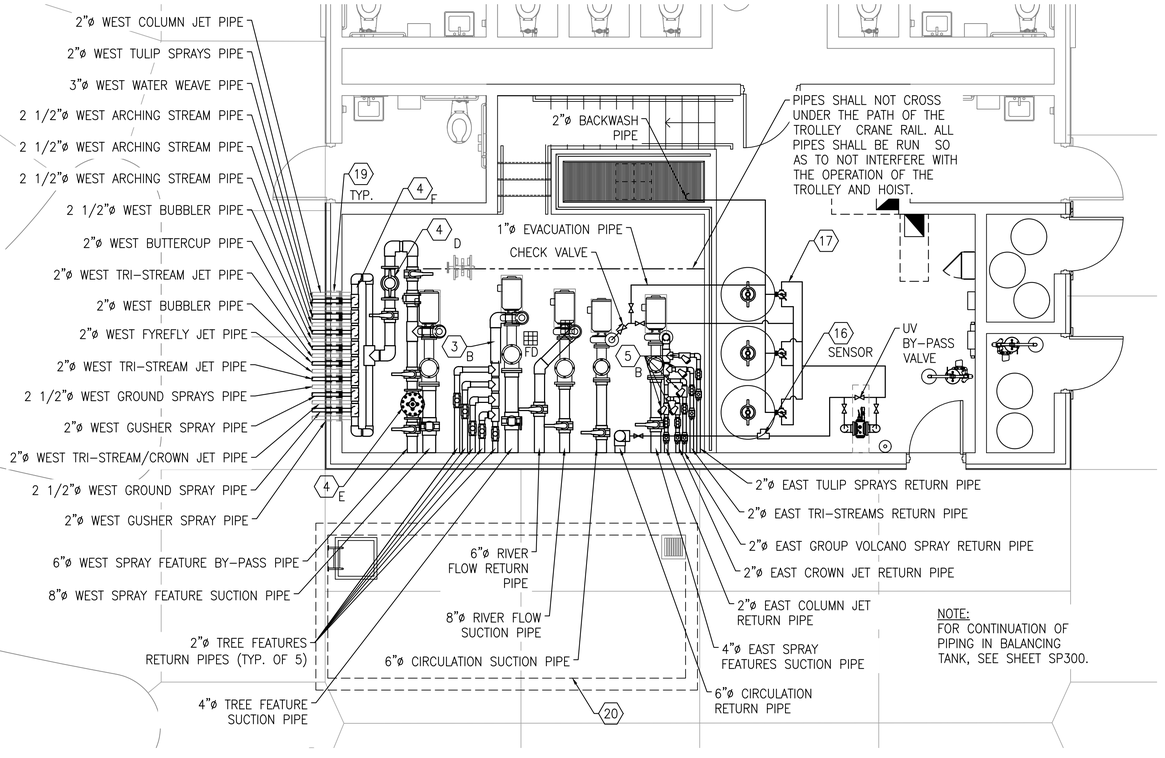

WATER FEATURE EQUIPMENT ROOM PIPING PLAN

SCALE: 1/4"=1'-0"

BID SET

blu line designs
planning | landscape architecture | design
8719 S. Sandy Parkway
Sandy, UT 84070
p 801.913.7994

CLIENT
FARMINGTON CITY
CONTACT: SYLVIA CLARK
PH: 801.939.9295
EMAIL:
SCLARK@FARMINGTON.UTAH.GOV

Water Design Inc
6740 South 1300 East
Salt Lake City, UT 84121
9012614009
www.waterdesigninc.com

The entire contents of the attached documents, including all sketches, plans, studies, drawings, schedules and specifications and all copyrights therein are, and shall remain the property of Water Design Incorporated. The documents and their contents may not be used, photocopied or reproduced digitally, electronically or in any other manner without the express prior written consent of Water Design Incorporated.

IVY ACRES PARK

1397 WEST COOK LANE
FARMINGTON, UT

REVISIONS

NO.	APPROVED	DESCRIPTION

LICENSED PROFESSIONAL ENGINEER
CHARLES ROSS ANDERSON
145589-2203
STATE OF UTAH
03/06/2024

Designed By:	BP
Drawn By:	TOS
Date:	03/06/2024
Checked By:	BA
Project No:	23-747FS

Drawing Title
INTERACTIVE WATER FEATURE EQUIPMENT ROOM PLAN

Drawing number
SP400

INTERACTIVE WATER FEATURE CIRCULATION EQUIPMENT SCHEDULE

(VERIFY ALL ELECTRICAL REQUIREMENTS WITH ELECTRICAL CONSULTANT/CONTRACTOR)

MARK	DESCRIPTION	QUANTITY	DETAIL	REQUIREMENT
1	PUMP FOR CIRCULATION (WITH STRAINER)	1	SEE CIRC. EQUIP. SCHEMATIC (SP410) — A/SP420	PENTAIR EQ SERIES EQKT-1000 (10 HP)

REMARKS: FOR 300 GPM, 90 FEET TDH AVAILABLE. PROVIDE WITH STRAINER. ELECTRICAL REQUIREMENTS: TEFC, 208V, 60 Hz, THREE PHASE. SEE ELECTRICAL INTERLOCK NOTES PROVIDE WITH 3 AUXILIARY CONTACTS. SEE ELECTRICAL INTERLOCK NOTES (BY ELECTRICAL CONTRACTOR). VERIFY WITH ELECTRICAL CONTRACTOR/ENGINEER FOR EXACT ELECTRICAL REQUIREMENTS.

MARK	DESCRIPTION	QUANTITY	DETAIL	REQUIREMENT
1B	VFD (FOR 10 HP CIRC PUMP #1)	1	N/A	PENTAIR ACUDRIVE XS AD010-2303-N12 (OR EQUAL) WITH FUSED BY-PASS KIT AND WITH FLOW SENOR KIT W/4-20 OUTPUT

REMARKS: POOL CONTRACTOR SHALL PROVIDE THE VFD FOR OPERATION OF THE 10 HP FEATURE PUMP. PROVIDE COMPLETE WITH FLOW SENSOR KIT AND FUSED BYPASS UPGRADE. 208V, THREE PHASE. ELECTRICAL CONTRACTOR SHALL PROVIDE THE POWER AND MAKE ALL CONNECTIONS TO EQUIPMENT. PROVIDE CONTROL WIRING AS DIRECTED BY POOL CONTRACTOR. SEE ELECTRICAL INTERLOCK NOTES. CONTRACTOR SHALL PROVIDE AN EASILY READABLE PERMANENT SIGN AT THE VFD: "FLOW RANGE FOR PUMP IS 300 GPM TO 381 GPM. OWNER/OPERATOR IS RESPONSIBLE FOR NOT EXCEEDING THE MAXIMUM FLOW OF 381 GPM"

MARK	DESCRIPTION	QUANTITY	DETAIL	REQUIREMENT
2A	PUMP (FOR RIVER FLOW)	1	N/A	PACO #60123-LC 15 HP

REMARKS: NSF LISTED, PREMIUM EFFICIENCY, INVERTER-READY, END SUCTION, CLOSE COUPLED, TEFC, EPOXY COATED, TYPE LC PUMP. IMPELLER SIZE: 10.12 INCH (VERIFY). MINIMUM DESIGN FLOW: 900 GPM AT 40 FEET TDH. 208V, 60 Hz, THREE PHASE, 1750 RPM, 83% EFFICIENT. PROVIDE WITH 3 AUXILIARY CONTACTS. SEE ELECTRICAL INTERLOCK NOTES (BY ELECTRICAL CONTRACTOR). VERIFY WITH ELECTRICAL CONTRACTOR/ENGINEER FOR EXACT ELECTRICAL REQUIREMENTS.

MARK	DESCRIPTION	QUANTITY	DETAIL	REQUIREMENT
2B	STRAINER (BEFORE SUCTION PORT OF PUMP #2)	1	N/A	MERMADE FO SERIES STRAINER (8"x 8")

REMARKS: FIBERGLASS REINFORCED PLASTIC WITH TRANSPARENT LID AND STAINLESS STEEL BASKET. VERIFY SIZE WITH PIPE SUCTION SIZE AND PUMP INLET SIZE.

MARK	DESCRIPTION	QUANTITY	DETAIL	REQUIREMENT
2C	VFD (FOR PUMP #2)	1	N/A	PENTAIR ACUDRIVE XS AD015-2303-N12 (OR EQUAL) WITH FUSED BY-PASS KIT AND WITH FLOW SENOR KIT W/4-20 OUTPUT

REMARKS: POOL CONTRACTOR SHALL PROVIDE THE VFD FOR OPERATION OF THE 15 HP FEATURE PUMP. PROVIDE COMPLETE WITH FLOW SENSOR KIT AND FUSED BYPASS UPGRADE. 208V, THREE PHASE. ELECTRICAL CONTRACTOR SHALL PROVIDE THE POWER AND MAKE ALL CONNECTIONS TO EQUIPMENT. PROVIDE CONTROL WIRING AS DIRECTED BY POOL CONTRACTOR. SEE ELECTRICAL INTERLOCK NOTES.

MARK	DESCRIPTION	QUANTITY	DETAIL	REQUIREMENT
3A	PUMP (FOR TREE FEATURE)	1	N/A	PENTAIR WHISPERFLO XF VS (UP TO 5 HP)

REMARKS: PUMP COMES WITH INTEGRAL VARIABLE FREQUENCY DRIVE. PUMPS COMES WITH STRAINER. DESIGN FLOW IS 200 GPM, 72 FEET TDH AVAILABLE. ELECTRICAL REQUIREMENTS: 208V, 60 Hz, 3-PHASE. SEE ELECTRICAL INTERLOCKING NOTES. VERIFY WITH ELECTRICAL CONTRACTOR/ENGINEER FOR EXACT ELECTRICAL REQUIREMENTS.

MARK	DESCRIPTION	QUANTITY	DETAIL	REQUIREMENT
3B	SIMPLEX STRAINER OR Y STRAINERS (AFTER PUMP)	TBD	N/A	TBD

REMARKS: TBD

MARK	DESCRIPTION	QUANTITY	DETAIL	REQUIREMENT
4A	PUMP (FOR WEST SPRAY FEATURES)	1	N/A	PACO #4012A-LC 20 HP

REMARKS: NSF LISTED, PREMIUM EFFICIENCY, INVERTER-READY, END SUCTION, CLOSE COUPLED, TEFC, EPOXY COATED, TYPE LC PUMP. IMPELLER SIZE: 10.31 INCH (VERIFY). FEATURE DESIGN FLOW: 781 GPM AT 80 FEET TDH. 208V, 60 Hz, THREE PHASE, 1750 RPM, 81% EFFICIENT. PROVIDE WITH 3 AUXILIARY CONTACTS. SEE ELECTRICAL INTERLOCK NOTES (BY ELECTRICAL CONTRACTOR). VERIFY WITH ELECTRICAL CONTRACTOR/ENGINEER FOR EXACT ELECTRICAL REQUIREMENTS.

MARK	DESCRIPTION	QUANTITY	DETAIL	REQUIREMENT
4B	STRAINER (BEFORE SUCTION PORT OF PUMP #4)	1	N/A	MERMADE FO SERIES ECCENTRIC REDUCING STRAINER (8"x 5")

REMARKS: ECCENTRIC REDUCING BASKET. FIBERGLASS REINFORCED PLASTIC WITH TRANSPARENT LID AND STAINLESS STEEL BASKET. VERIFY SIZE WITH PIPE SUCTION SIZE AND PUMP INLET SIZE.

MARK	DESCRIPTION	QUANTITY	DETAIL	REQUIREMENT
4C	VFD (FOR PUMP #4)	1		PENTAIR ACUDRIVE XS AD020-2303-N12 (OR EQUAL) WITH FUSED BY-PASS KIT AND WITH FLOW SENOR KIT W/4-20 OUTPUT

REMARKS: POOL CONTRACTOR SHALL PROVIDE THE VFD FOR OPERATION OF THE 20 HP FEATURE PUMP. PROVIDE COMPLETE WITH FLOW SENSOR KIT AND FUSED BYPASS UPGRADE. 208V, THREE PHASE. ELECTRICAL CONTRACTOR SHALL PROVIDE THE POWER AND MAKE ALL CONNECTIONS TO EQUIPMENT. PROVIDE CONTROL WIRING AS DIRECTED BY POOL CONTRACTOR. SEE ELECTRICAL INTERLOCK NOTES.

MARK	DESCRIPTION	QUANTITY	DETAIL	REQUIREMENT
4D	STRAINER (AFTER PUMP #4)	1 WITH ADDITIONAL STRAINER BASKET	N/A	HAYWARD SB SERIES SIMPLEX STRAINER: 6" PVC

REMARKS: PROVIDE 20 MESH STAINLESS STEEL BASKET. PROVIDE SPARE 20 MESH STAINLESS STEEL BASKET FOR SWITCH OUT TO FACILITATE CLEANING PROCEDURE. FEATURE PIPING SHALL TRANSITION FROM 4" TO 6" AT STRAINER AND BACK TO 4" PRIOR TO MANIFOLD. PROVIDE WITH ISOLATION VALVES ON BOTH SIDES OF STRAINER. PROVIDE CONCRETE HOUSEKEEPING PAD SUPPORT TO HEIGHT AS REQUIRED ON THE EQUIPMENT ROOM FLOOR.

MARK	DESCRIPTION	QUANTITY	DETAIL	REQUIREMENT
4E	PRESSURE RELIEF & PRESSURE SUSTAINING VALVE FOR PUMP #4	1	N/A	CLA-VAL 650-01 OR 50-01

REMARKS: 6" GLOBE VALVE FOR 781 GPM, NSF LISTED, FUSION BONDED, REDUCED INTERNAL PORT, EPOXY LINED AND COATED WITH STAINLESS STEEL PILOT SYSTEM MATERIALS. 0-75 PSI ADJUSTMENT RANGE AND FLANGED FITTINGS. PROVIDE SUBMITTAL FOR REVIEW.

MARK	DESCRIPTION	QUANTITY	DETAIL	REQUIREMENT
4F	MANIFOLD FOR SPRAY FEATURES DISTRIBUTION (FOR PUMP #4 WEST SPRAYS)	1	10/SP410	CUSTOM SCHEDULE 80 PVC

REMARKS: FIELD BUILD STACKED DISTRIBUTION MANIFOLD FOR THE NOZZLE PIPING SYSTEM, EACH PIPE WITH SOLENOID VALVES, ISOLATION VALVES AND DRAIN PLUG / VALVE .

MARK	DESCRIPTION	QUANTITY	DETAIL	REQUIREMENT
5A	PUMP (FOR EAST SPRAYS)	1	N/A	PENTAIR WHISPERFLO XF VS (UP TO 5 HP)

REMARKS: PUMP COMES WITH INTEGRAL VARIABLE FREQUENCY DRIVE. PUMPS COMES WITH STRAINER. DESIGN FLOW IS 132 GPM, 72 FEET TDH AVAILABLE. ELECTRICAL REQUIREMENTS: 208V, 60 Hz, 3-PHASE. SEE ELECTRICAL INTERLOCKING NOTES. VERIFY WITH ELECTRICAL CONTRACTOR/ENGINEER FOR EXACT ELECTRICAL REQUIREMENTS.

MARK	DESCRIPTION	QUANTITY	DETAIL	REQUIREMENT
5B	"Y" STRAINERS (AFTER PUMP)	5 (SEE PLAN)	N/A	HAYWARD Y-STRAINER W/ EPDM O-RINGS

REMARKS: PROVIDE SIZE BASED ON SPRAY FEATURE RETURN PIPE SIZE. SEE EQUIPMENT ROOM PLAN FOR SIZES. PROVIDE 325 MESH STAINLESS STEEL BASKETS. PROVIDE 1 ADDITIONAL BASKET FOR EACH Y STRAINER FOR SWITCH OUT TO FACILITATE CLEANING PROCEDURE.

MARK	DESCRIPTION	QUANTITY	DETAIL	REQUIREMENT
6	FILTERS (SAND)	3	SEE CIRC. EQUIP. SCHEMATIC (SP410)	PENTAIR TRITON TR-140C-3

REMARKS: 36"ø FILTER. 7.06 SF AREA EACH FILTER. TOTAL FILTER AREA EQUALS 21.18 SF. PROVIDE A FULL FLO XF VALVE FOR MANUAL BACKWASH. BACKWASH EACH FILTER AT 127 GPM FOR AN APPROXIMATE FIVE MINUTE DURATION (15 TO 20 GPM PER SF OF FILTER AREA).

MARK	DESCRIPTION	QUANTITY	DETAIL	REQUIREMENT
7A	ANIMATION AND CONTROL PANEL -PROGRAMMABLE LOGIC CONTROLLER (PLC)	1	N/A	DESIGN-BUILD CUSTOM CONTROLLER BY SAPPHIRE (AQUAFECT) OR EQUAL

FUNCTIONALITY TO INCLUDE:
PUMP CONTROL VIA VFDS.
WIND CONTROL:
- PROVIDE WITH ANEMOMETER AND CONTROL.
- INTERLOCK WITH THREE FEATURE PUMPS AND SOLENOID VALVES ON SELECT SPRAY NOZZLE PIPES.

TIMER:
- PROVIDED FOR HOURS OF OPERATION.

ACTIVATION BOLLARDS:
- PROVIDE WITH CONNECTIONS FOR BOLLARD ACTIVATORS

SOLENOID ACTIVATION:
- TO ACTIVATE ALL SOLENOID VALVES.

PROGRAMING:
- COORDINATE WITH ENGINEER AND CLIENTS TO PROVIDE PROGRAMING, AS A DEFERRED SUBMITTAL.
- ANY ZONE (FEED PIPE) SHALL BE ABLE TO BE ALWAYS ON.
- PROVIDE TOUCH SCREEN MENU AND PROGRAMMING FOR CLIENT CHANGES TO PROGRAM.

MARK	DESCRIPTION	QUANTITY	DETAIL	REQUIREMENT
7B	MONITORING SYSTEM	1	N/A	HYDROAPPS (BY COUNCILMAN HUNSAKER)

MODULES: PROVIDE WITH FACILITY MANAGER, ASSET MANAGER, SCHEDULE MANAGER, AND POOL TEST. HARDWARE AND SOFTWARE REQUIREMENTS TBD.

MARK	DESCRIPTION	QUANTITY	DETAIL	REQUIREMENT
8A	CHEMICAL CONTROLLER	1	SEE CIRC. EQUIP. SCHEMATIC (SP410) — 2/3/SP410	BECS TECHNOLOGY BECSys 5

REMARKS: 120/240 VAC, <1 AMP. PROVIDE WITH FLOW MONITORING. ELECTRICAL CONTRACTOR SHALL PROVIDE POWER FOR THE CONTROLLER ON A SEPARATE CIRCUIT FROM THE POWER FOR THE RELAYS. ELECTRICAL INTERLOCKING BY ELECTRICAL CONTRACTOR. SEE ELECTRICAL INTERLOCK NOTES. COORDINATE WITH THE WATER FEATURE CONTRACTOR. PROVIDE WITH WATER-LEVEL CONTROL AND SENSORS. THE WATER FEATURE CONTRACTOR SHALL PROVIDE A CLS CALIBRATED LIQUID LEVEL SENSOR FOR MONITORING OF THE BALANCING TANK WATER LEVELS. WATER FEATURE CONTRACTOR SHALL UTILIZE THE SIGNET FLOW METER SENSOR FOR MONITORING OF THE WATER FEATURE WATER FLOW RATE.

MARK	DESCRIPTION	QUANTITY	DETAIL	REQUIREMENT
8B	INTERLOCK (FOR CHEMICAL SYSTEM)	1	N/A	BECS TECHNOLOGY BECSys CHEMLOCK 2100480

REMARKS: 115 V, 50/60 Hz, 28 AMP. INDEPENDENT INTERLOCK FOR CHEMICAL FEEDERS. ELECTRICAL INTERLOCKING BY ELECTRICAL CONTRACTOR. SEE ELECTRICAL INTERLOCK NOTES. COORDINATE WITH THE POOL CONTRACTOR.

MARK	DESCRIPTION	QUANTITY	DETAIL	REQUIREMENT
9	FEEDER (FOR LIQUID CHLORINE)	1	SEE CIRC. EQUIP. SCHEMATIC (SP410) — 1/SP410	STENNER #45-M5

REMARKS: 120 VAC, 60 Hz, 1.7 AMP, 1/30 FRACTIONAL HP. ALSO SEE EQUIPMENT SCHEMATIC. ELECTRICAL SHALL PROVIDE DEDICATED SINGLE PLUG OUTLET FOR POWER. INTERLOCK OUTLET WITH CHEMICAL CONTROLLER. OUTLET SHALL BE PLACED ABOVE THE CHEMICAL FEED PUMP.

MARK	DESCRIPTION	QUANTITY	DETAIL	REQUIREMENT
10	FEEDER (FOR ACID)	1	SEE CIRC. EQUIP. SCHEMATIC (SP410) — 1/SP410	STENNER #45-M5

REMARKS: 120 VAC, 60 Hz, 1.7 AMP, 1/30 FRACTIONAL HP. ALSO SEE EQUIPMENT SCHEMATIC. ELECTRICAL SHALL PROVIDE DEDICATED SINGLE PLUG OUTLET FOR POWER. INTERLOCK OUTLET WITH CHEMICAL CONTROLLER. OUTLET SHALL BE PLACED ABOVE THE CHEMICAL FEED PUMP.

MARK	DESCRIPTION	QUANTITY	DETAIL	REQUIREMENT
11	CONTAINERS (FOR LIQUID CHLORINE)	3	SEE CIRC. EQUIP. SCHEMATIC (SP410)	55 GALLON DRUM CAPACITY

REMARKS: START UP CHEMICALS PROVIDED BY POOL CONTRACTOR. STORAGE VESSEL SHALL BE MARKED WITH THE APPROPRIATE HAZARD IDENTIFICATION SIGNS PER REQUIREMENTS OF THE NFPA 704. PROVIDE COMPLETE WITH FILL PIPING WITH CAM-LOCK FITTING AND ACID VENT TRAP CONTAINER AND VAPOR CHECK VALVE.

MARK	DESCRIPTION	QUANTITY	DETAIL	REQUIREMENT
12	CONTAINERS (FOR ACID)	2	SEE CIRC. EQUIP. SCHEMATIC (SP410)	55 GALLON DRUM CAPACITY

REMARKS: START UP CHEMICALS PROVIDED BY POOL CONTRACTOR. STORAGE VESSEL SHALL BE MARKED WITH THE APPROPRIATE HAZARD IDENTIFICATION SIGNS PER REQUIREMENTS OF THE NFPA 704. PROVIDE COMPLETE WITH FILL PIPING WITH CAM-LOCK FITTING AND ACID VENT TRAP CONTAINER AND VAPOR CHECK VALVE.

MARK	DESCRIPTION	QUANTITY	DETAIL	REQUIREMENT
13A	UV DISINFECTION SYSTEM	1	SEE CIRC. EQUIP. SCHEMATIC (SP410) — 6/SP410	ENGINEERED TREATMENT SYSTEMS (ETS) WF-125-6N

REMARKS: PROVIDE FOR INSTALLATION TO 6"ø FACE PIPING. PROVIDE UV SYSTEM EQUIPPED WITH MEDIUM PRESSURE UV LAMPS AND AUTOMATIC MECHANICAL CLEANING SYSTEM. PROVIDE AN INLINE FLOW SWITCH WITH CONNECTION TO CONTROL PANEL CONTACT FOR INDICATION OF NO FLOW CONDITION. FOR CONTROL PANEL REMARKS, SEE BELOW. INSTALLATION SHALL BE PER THE REQUIREMENTS OF THE UV SYSTEM MANUFACTURER WITH ALL REQUIRED COMPONENTS PROVIDED (I.E. BY-PASS LINE, ISOLATION VALVES, FLANGED CONNECTIONS, UV STRAINER BASKET, AND PROPER LENGTHS OF PIPING, SCHEDULE 80 PVC). UV UNIT SHALL BE INSTALLED DOWNSTREAM OF THE FLOW CELL SENSING LINE AND UPSTREAM OF CHEMICAL INJECTION POINTS. UV SYSTEM IS SIZED FOR DOSE OF 60 mJ/CM² FOR DESTRUCTION OF CHLORAMINES. UV SYSTEM CONTRACTOR SHALL PROVIDE ONE EXTRA SET OF BULBS ON SITE FOR REPLACEMENT AS NEEDED.

MARK	DESCRIPTION	QUANTITY	DETAIL	REQUIREMENT
13B	UV SYSTEM CONTROL PANEL	1	SEE CIRC. EQUIP. SCHEMATIC (SP410) — 6/SP410	ENGINEERED TREATMENT SYSTEMS (ETS) PANEL FOR WF-125-6N UNIT

REMARKS: ELECTRICAL CONTRACTOR SHALL COORDINATE WITH POOL CONTRACTOR FOR POWER REQUIREMENTS FOR MANUFACTURER OF UV SYSTEM PROVIDED. PROVIDE WITH INTERMEDIATE JUNCTION BOX AND OPTIONAL LENGTHS OF CABLES AS REQUIRED.
CONTROL PANEL ELECTRICAL REQUIREMENTS:
208-240 VOLT, 1 PHASE, 60 HZ, 30 AMP BREAKER.

MARK	DESCRIPTION	QUANTITY	DETAIL	REQUIREMENT
14	PRESSURE GAUGES AND VACUUM GAUGE	3 FOR FILTERS 2 FOR EACH PUMP 13 TOTAL	SEE CIRC. EQUIP. SCHEMATIC (SP410)	0-60 PSI 0-30" hg

REMARKS: NOT SHOWN ON PLAN. SEE CIRCULATION EQUIPMENT SCHEMATIC. INTEGRATE TO SHOW FILTER INFLUENT AND EFFLUENT PRESSURES. PROVIDE VACUUM GAUGE (OR COMBINATION VACUUM/PRESSURE GAUGE IF NEC.) ON SUCTION SIDE AND PRESSURE GAUGE ON DISCHARGE SIDE OF PUMP.

MARK	DESCRIPTION	QUANTITY	DETAIL	REQUIREMENT
16	FLOWMETER	1 (SENSOR ONLY)	SEE CIRC. EQUIP. SCHEMATIC (SP410)	SIGNET #515 ROTOR-X SENSOR

REMARKS: SENSOR: (ONE IN RETURN LINE). SIGNET METER NOT REQUIRED. THE CIRCULATION FLOW SHALL BE DISPLAYED ON THE READOUTS OF THE CHEMICAL CONTROLLER. FLOWMETER SENSOR SHALL BE INSTALLED WITH PROPER RUN OF PIPE UPSTREAM AND DOWNSTREAM OF FLOWMETER PER MANUFACTURER'S RECOMMENDATIONS.

MARK	DESCRIPTION	QUANTITY	DETAIL	REQUIREMENT
17	FACE PIPING	PIPING FOR CIRC SYSTEM IN EQUIPMENT ROOM	SEE CIRC. EQUIP. SCHEMATIC (SP410)	PVC SCHEDULE 40

REMARKS: 6"ø PVC PIPE.

MARK	DESCRIPTION	QUANTITY	DETAIL	REQUIREMENT
18	WATER LEVEL CONTROL SYSTEM	1	SEE POTABLE WATER FILL SCHEMATIC (SP410)	SEE ITEM 8A

REMARKS: WATER LEVEL SHALL BE MONITORED AND CONTROLLED THRU THE CHEMICAL CONTROLLER (SEE ITEM #8A). MAKE CONNECTION TO POTABLE WATER SUPPLY AND PROVIDE MANUAL AND SOLENOID VALVE ON FILL LINE TO SURGE TANK. SENSOR UNIT LOCATED IN THE BALANCING TANK. PROTECT SENSOR CABLE IN WATERTIGHT CHAMBER. SEE POTABLE WATER LINE REMARKS BELOW.

MARK	DESCRIPTION	QUANTITY	DETAIL	REQUIREMENT
19	PIPE WALL SLEEVE WITH MODULAR SEAL	ALL PUMP PIT PENETRATIONS AND ALL BALANCING TANK PENETRATIONS	5/SP410	THUNDERSEAL LINK-SEAL MODEL "S-316" WITH CENURY-LINE SLEEVE

REMARKS: PROVIDE MANUFACTURER'S SLEEVE (OR CORE DRILL) AT ALL PIPE PENETRATIONS. POOL CONTRACTOR SHALL PROVIDE SLEEVES. GENERAL CONTRACTOR SHALL COORDINATE LOCATION OF SLEEVES WITH POOL CONTRACTOR AND SHALL INSTALL. PROVIDE SEALS WITH STAINLESS STEEL FASTENERS.

MARK	DESCRIPTION	QUANTITY	DETAIL	REQUIREMENT
20	BALANCING TANK			SEE FITTING SCHEDULE AND PLAN SHEET SP300.

UTILITIES AND ITEMS PROVIDED BY OTHERS

(ITEMS TO BE DESIGNED, ENGINEERED, AND SPECIFIED BY OTHER CONSULTANTS)

MARK	DESCRIPTION	QUANTITY	DETAIL	REQUIREMENT
21	EMERGENCY EYE WASH STATION	BY OTHERS	N/A	SEE PLUMBING DRAWINGS

REMARKS: PER OSHA AND ANSI STANDARDS

MARK	DESCRIPTION	QUANTITY	DETAIL	REQUIREMENT
22	CHLORINE STORAGE ROOM	BY OTHERS	N/A	SEE ARCHITECTURAL AND STRUCTURAL DRAWINGS

REMARKS: ROOM SHALL BE CONSTRUCTED OF CORROSIVE RESISTANT MATERIALS. DOOR AND HARDWARE SHALL BE CORROSIVE RESISTANT. CLOSET SHALL BE VENTED TO THE OUTSIDE, BY MECHANICAL. THE ROOM SHALL NOT HAVE A FLOOR DRAIN. POOL CONTRACTOR SHALL PROVIDE IDENTIFICATION PLACARDS ON THE ENTRY DOOR TO THE STORAGE AREA AS REQUIRED BY THE NFPA 704. MAXIMUM ALLOWABLE STORAGE IN THIS CONTROL AREA IS 500 GALLONS. MAXIMUM CHEMICAL STORAGE PROVIDED IS 232 GALLONS.

MARK	DESCRIPTION	QUANTITY	DETAIL	REQUIREMENT
23	ACID STORAGE ROOM	BY OTHERS	N/A	SEE ARCHITECTURAL AND STRUCTURAL DRAWINGS

REMARKS: ROOM SHALL BE CONSTRUCTED OF CORROSIVE RESISTANT MATERIALS. DOOR AND HARDWARE SHALL BE CORROSIVE RESISTANT. CLOSET SHALL BE VENTED TO THE OUTSIDE, BY MECHANICAL. THE ROOM SHALL NOT HAVE A FLOOR DRAIN. POOL CONTRACTOR SHALL PROVIDE IDENTIFICATION PLACARDS ON THE ENTRY DOOR TO THE STORAGE AREA AS REQUIRED BY THE NFPA 704. MAXIMUM ALLOWABLE STORAGE IN THIS CONTROL AREA IS 500 GALLONS. MAXIMUM CHEMICAL STORAGE PROVIDED IS 232 GALLONS.

MARK	DESCRIPTION	QUANTITY	DETAIL	REQUIREMENT
24	PUMP PIT	BY OTHERS	A/SP420	SEE ARCHITECTURAL AND STRUCTURAL DRAWINGS

REMARKS: OPEN-TOP PUMP PIT SHALL BE PROVIDED WITH GUARDRAIL(S) AND STAIR ACCESS AS SHOWN ON ARCHITECTURAL PLANS AND SPECIFICATIONS.

A SUMP SHALL BE PROVIDED IN THE FLOOR OF THE PUMP PIT FOR A SUMP PUMP TO EXPEL INCIDENTAL WATER IN THE PIT. PIT FLOOR SHALL SLOPE TO THE SUMP.

MARK	DESCRIPTION	QUANTITY	DETAIL	REQUIREMENT
25	LIFT STATION AND FLOOR DRAIN	BY OTHERS	N/A	SEE PLUMBING DRAWINGS

LIFT-STATION DUAL SUMP-PUMP SYSTEM IN PUMP PIT: LIFT-STATION SUMP AT PER PLUMBING PLANS WITH DUAL SUMP PUMPS TO EJECT WATER INTO THE UPPER BACKWASH SUMP. SUMP PUMP LIFT-STATION SYSTEM SHALL BE SIZED TO HANDLE ANCILLARY MAINTENANCE WATER. PUMP-PIT FLOOR SHALL SLOPE TO THE SUMP.

DRAIN IN EQUIPMENT ROOM FLOOR: FLOOR DRAIN SHALL BE SIZED TO HANDLE ANCILLARY MAINTENANCE WATER. DRAIN PIPE TO APPROVED WASTE BY PLUMBING CONTRACTOR.

MARK	DESCRIPTION	QUANTITY	DETAIL	REQUIREMENT
26	POTABLE WATER PIPING AND VALVES TO EQUIPMENT ROOM	BY OTHERS	SEE POTABLE WATER FILL SCHEMAITC (SP410)	SEE PLUMBING DRAWINGS

REMARKS: POTABLE WATER LINE NOT SHOWN ON PLANS. POTABLE WATER LINE, APPROVED BACKFLOW PREVENTION DEVICE, AND SHUT OFF VALVE TO EQUIPMENT ROOM BY PLUMBING CONTRACTOR. PROVIDE 40 TO 60 GPM AT MAXIMUM 40 TO 50 PSI. PLUMBING CONTRACTOR TO PROVIDE STUB-IN TO POOL EQUIPMENT ROOM. POOL CONTRACTOR TO PROVIDE SOLENOID VALVE, MANUAL FILL VALVE AND EXTEND PIPING TO BALANCING TANK. SEE WATER LEVEL CONTROLLER REMARKS.

MARK	DESCRIPTION	QUANTITY	DETAIL	REQUIREMENT
27	BACKWASH SUMP	BY OTHERS	4/SP410 A/SP420	SEE PLUMBING DRAWINGS AND ARCHITECT PLANS

REMARKS: WITH GRATING AND DRAIN/DISCHARGE PER LOCAL HEALTH CODE. BACKWASH EACH HIGH RATE SAND FILTER AT 127 GPM MIN. FOR A 5 MINUTE DURATION. STAGGER BACKWASH CYCLES TO ALLOW THE SUMP TO FULLY DRAIN. PLUMBING ENGINEER TO SIZE THE SUMP TO RETAIN BACKWASH FLOW AS NEEDED. SUMP SHALL BE SIZED SUCH THAT THE MAXIMUM DISCHARGE FROM SUMP DOES NOT EXCEED LOCAL SEWER DISTRICT REQUIREMENTS (E.G. 50 GPM). SUMP AND GRATING BY GENERAL CONTRACTOR. LINE TO SANITARY SEWER BY PLUMBING CONTRACTOR.

MARK	DESCRIPTION	QUANTITY	DETAIL	REQUIREMENT
28	ELECTRICAL PANEL	BY OTHERS	N/A	SEE ELECTRICAL DRAWINGS

REMARKS: PANEL AND STARTERS TO BE PROVIDED AND INSTALLED BY THE ELECTRICAL CONTRACTOR AND SHALL INCLUDE WIRING AND CONDUIT. ELECTRICAL CONTRACTOR SHALL MAKE ALL CONNECTIONS TO EQUIPMENT. PROVIDE CONTROL WIRING AS DIRECTED BY POOL CONTRACTOR. SEE ELECTRICAL INTERLOCK NOTES. ELECTRICAL PANELS INSTALLED IN THE POOL EQUIPMENT ROOM, SHALL MEET CORROSION RESISTANCE REQUIREMENTS OF NEC 2020 ARTICLE 680.14, I.E. BE NEMA-4X RATED. PROVIDE OVERLOAD PROTECTION FOR PUMP MOTORS AND PHASE PROTECTION.

MARK	DESCRIPTION	QUANTITY	DETAIL	REQUIREMENT
29A	TROLLEY FOR HOIST	BY OTHERS	N/A	CM HOIST PRODUCTS SERIES 633 #3304 (PROVIDED BY OWNER)

REMARKS: NOT SHOWN ON PLAN. RATED CAPACITY: 1 TON. OWNER SHALL PROVIDE WHEN REQUIRED. STRUCTURAL CONSULTANT SHALL DESIGN REQUIRED BEAM.

MARK	DESCRIPTION	QUANTITY	DETAIL	REQUIREMENT
29B	ELECTRIC CHAIN HOIST	BY OTHERS	N/A	CM HOIST PRODUCTS LODESTAR SINGLE SPEED # 4224 MODEL L 1 TON CAPACITY (PROVIDED BY OWNER)

REMARKS: NOT SHOWN ON PLAN. RATED CAPACITY = 1 TON. STANDARD LIFT = 15 FEET. LIFT SPEED = 16 FT/MIN. OWNER SHALL PROVIDE WHEN REQUIRED. VERIFY LENGTH OF CHAIN REQUIRED BEFORE ORDERING. VERIFY LENGTH OF CONTROLLER CABLE REQUIRED BEFORE ORDERING. ELECTRICAL CONTRACTOR SHALL PROVIDE ALL REQUIRED ELECTRICAL FOR FUTURE CONNECTION OF HOIST. 1 HP, 460 VOLT, THREE PHASE, 60 Hz.

MARK	DESCRIPTION	QUANTITY	DETAIL	REQUIREMENT
30	VENTILATION	BY OTHERS	N/A	SEE MECHANICAL PLANS

REMARKS: PROVIDE 365/24/7 VENTILATION OF EQUIPMENT ROOM AND CHEMICAL-STORAGE CLOSETS, SEPARATELY.

SEE SHEET SP400 FOR SPLASH PAD EQUIPMENT NOTES AND ELECTRICAL INTERLOCKING NOTES

blu line designs
planning | landscape architecture | design
8719 S. Sandy Parkway
Sandy, UT 84070
p 801.913.7994

CLIENT

FARMINGTON CITY
CONTACT: SYLVIA CLARK
PH: 801.939.9295
EMAIL:
SCLARK@FARMINGTON.UTAH.GOV

FARMINGTON

Water Design Inc
6740 South 1300 East
Salt Lake City, UT 84121
9012614029
www.waterdesigninc.com

The entire contents of the attached documents, including all sketches, plans, studies, drawings, schedules and specifications and all copyrights therein are, and shall remain the property of Water Design Inc. The documents and their contents may not be used, photocopied or reproduced digitally, electronically or in any other manner without the express prior written consent of Water Design Incorporated.

IVY ACRES PARK

1397 WEST COOK LANE
FARMINGTON, UT

REVISIONS

NO.	DATE	DESCRIPTION

LICENSED PROFESSIONAL ENGINEER
CHARLES ROSS ANDERSON
145589-2203
STATE OF UTAH
03/06/2024

Designed By:	BP
Drawn By:	TOS
Date:	03/06/2024
Checked By:	BA
Project No:	23-747FS

Drawing Title

CIRCULATION EQUIPMENT SCHEDULE

Drawing number

SP401

BID SET

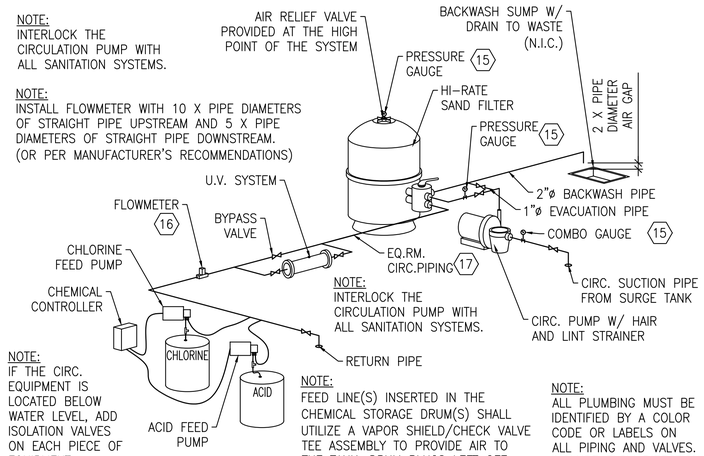

CIRCULATION EQUIPMENT SCHEMATIC

SCALE: NONE

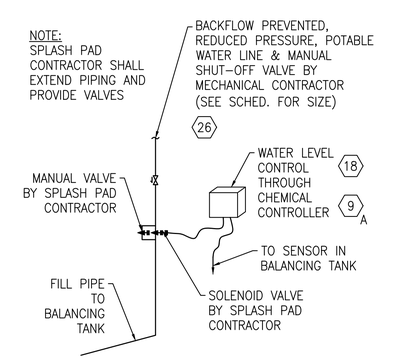

POTABLE WATER FILL SCHEMATIC

SCALE: NONE

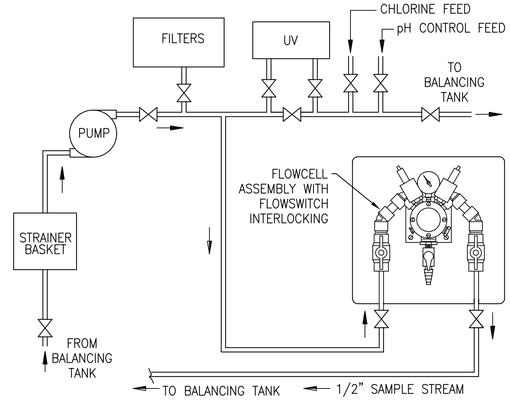

CHEMICAL CONTROL SYSTEM SCHEMATIC

SCALE: NONE

NOTE:
ANCHOR CHLORINE AND ACID FEED LINES TO WALL AND/OR CEILING. PROVIDE ANCHORS AT 3'-0" C.C. MAX.

NOTE:
PROVIDE CHEMICAL PIPING/TUBING CONTENT IDENTIFICATION AND FLOW DIRECTION MARKINGS.

NOTE:
PROVIDE SLEEVES IN THE WALL FOR THE ACID AND CHLORINE LINES TO PASS THROUGH. FILL THE VOIDS WITH FOAM INSULATION OR OTHER MATERIALS TO COMPLY WITH ALL APPLICABLE FIRE CODES FOR PIPE PENETRATIONS.

NOTE:
READILY ACCESSIBLE MANUAL VALVES SHALL BE INSTALLED ON THE SUPPLY PIPING AND TUBING AT THE POINT OF USE AND AT THE TANK, CYLINDER OR BULK SOURCE. THE MANUAL EMERGENCY SHUTOFF VALVES SHALL BE IDENTIFIED AND THE LOCATION SHALL BE CLEARLY VISIBLE, ACCESSIBLE AND INDICATED BY MEANS OF A SIGN.

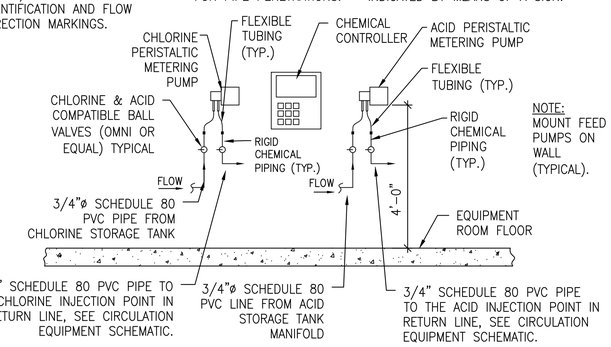

CHEMICAL FEED SYSTEM DETAIL

SCALE: NONE

1 / SP410

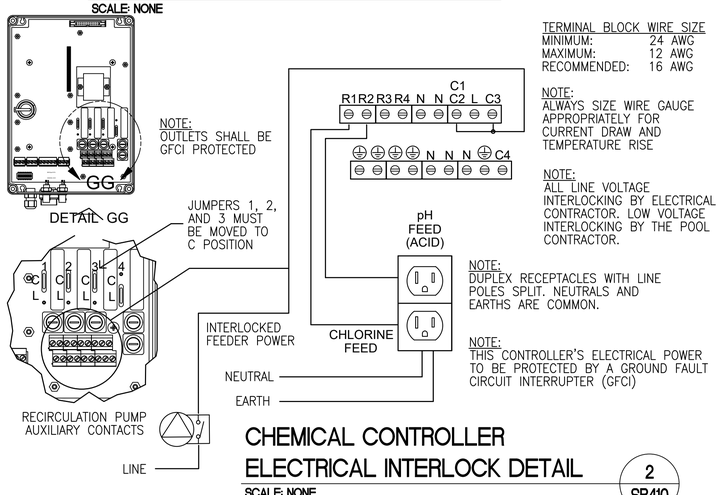

TERMINAL BLOCK WIRE SIZE
MINIMUM: 24 AWG
MAXIMUM: 12 AWG
RECOMMENDED: 16 AWG

NOTE:
ALWAYS SIZE WIRE GAUGE APPROPRIATELY FOR CURRENT DRAW AND TEMPERATURE RISE

NOTE:
ALL LINE VOLTAGE INTERLOCKING BY ELECTRICAL CONTRACTOR. LOW VOLTAGE INTERLOCKING BY THE POOL CONTRACTOR.

CHEMICAL CONTROLLER ELECTRICAL INTERLOCK DETAIL

SCALE: NONE

2 / SP410

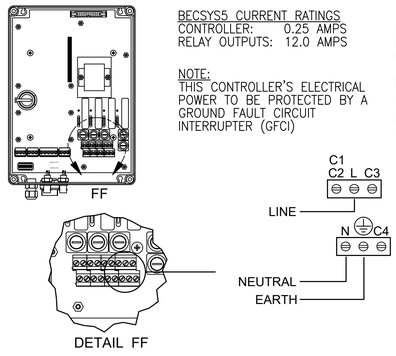

BECSYS5 CURRENT RATINGS
CONTROLLER: 0.25 AMPS
RELAY OUTPUTS: 12.0 AMPS

NOTE:
THIS CONTROLLER'S ELECTRICAL POWER TO BE PROTECTED BY A GROUND FAULT CIRCUIT INTERRUPTER (GFCI)

TERMINAL BLOCK WIRE SIZE
MINIMUM: 24 AWG
MAXIMUM: 12 AWG
RECOMMENDED: 16 AWG

NOTE:
ALWAYS SIZE WIRE GAUGE APPROPRIATELY FOR CURRENT DRAW AND TEMPERATURE RISE

NOTE:
ALL LINE VOLTAGE INTERLOCKING BY ELECTRICAL CONTRACTOR. LOW VOLTAGE INTERLOCKING BY THE POOL CONTRACTOR.

CHEMICAL CONTROLLER POWER WIRING DIAGRAM DETAIL

SCALE: NONE

3 / SP410

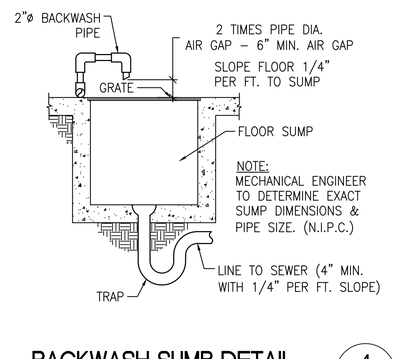

BACKWASH SUMP DETAIL

SCALE: 1/2" = 1'-0"

4 / SP410

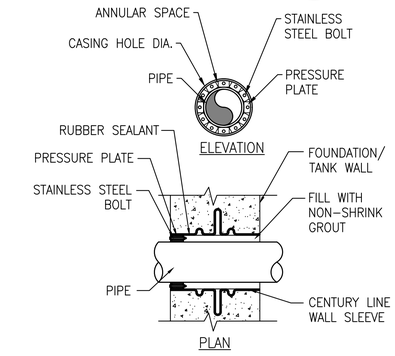

LINK SEAL DETAIL

SCALE: 1 1/2" = 1'-0"

5 / SP410

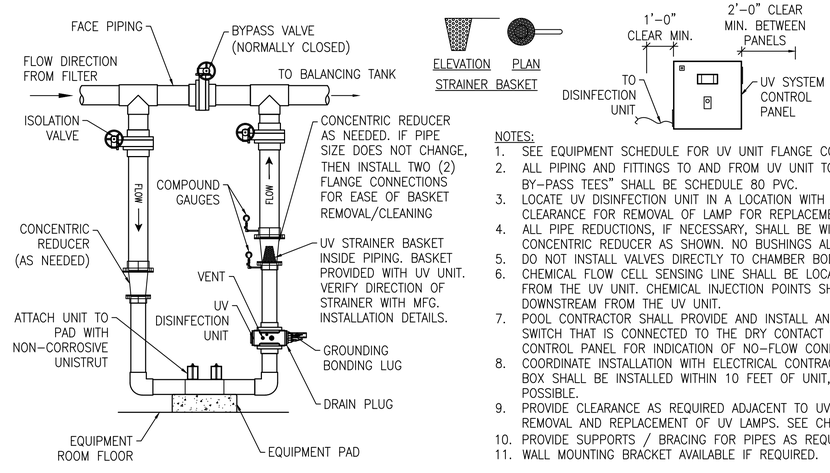

NOTES:
1. SEE EQUIPMENT SCHEDULE FOR UV UNIT FLANGE CONNECTION SIZE.
2. ALL PIPING AND FITTINGS TO AND FROM UV UNIT TO THE "UV BY-PASS TEES" SHALL BE SCHEDULE 80 PVC.
3. LOCATE UV DISINFECTION UNIT IN A LOCATION WITH SUFFICIENT CLEARANCE FOR REMOVAL OF LAMP FOR REPLACEMENT
4. ALL PIPE REDUCTIONS, IF NECESSARY, SHALL BE WITH A CONCENTRIC REDUCER AS SHOWN. NO BUSHINGS ALLOWED.
5. DO NOT INSTALL VALVES DIRECTLY TO CHAMBER BODY.
6. CHEMICAL FLOW CELL SENSING LINE SHALL BE LOCATED UPSTREAM FROM THE UV UNIT. CHEMICAL INJECTION POINTS SHALL BE DOWNSTREAM FROM THE UV UNIT.
7. POOL CONTRACTOR SHALL PROVIDE AND INSTALL AN IN-LINE FLOW SWITCH THAT IS CONNECTED TO THE DRY CONTACT WITHIN THE UV CONTROL PANEL FOR INDICATION OF NO-FLOW CONDITION.
8. COORDINATE INSTALLATION WITH ELECTRICAL CONTRACTOR. CONTROL BOX SHALL BE INSTALLED WITHIN 10 FEET OF UNIT, WHENEVER POSSIBLE.
9. PROVIDE CLEARANCE AS REQUIRED ADJACENT TO UV UNIT FOR REMOVAL AND REPLACEMENT OF UV LAMPS. SEE CHARTS.
10. PROVIDE SUPPORTS / BRACING FOR PIPES AS REQUIRED.
11. WALL MOUNTING BRACKET AVAILABLE IF REQUIRED.

TYPICAL UV SYSTEM DETAIL

SCALE: NONE

6 / SP410

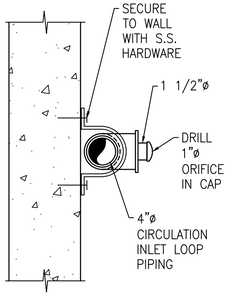

BALANCING TANK INLET DETAIL

SCALE: 1 1/2" = 1'-0"

7 / SP410

CONTROL NOTES:
1. ALL ELECTRICAL EQUIPMENT IN A SPLASH PAD MUST BE INSTALLED IN ACCORDANCE WITH THE NATIONAL ELECTRICAL CODE AND ANY APPLICABLE LOCAL CODES.

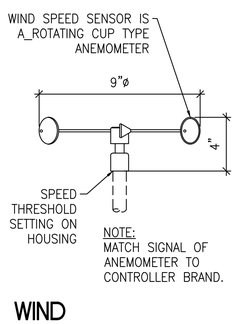

NOTE:
MATCH SIGNAL OF ANEMOMETER TO CONTROLLER BRAND.

WIND CONTROLLER DETAIL

SCALE: NONE

8 / SP410

DECK MOUNTED JUNCTION:
• CAST BRONZE CONSTRUCTION WITH STAINLESS STEEL FASTENERS
• INTERNAL GROUNDING LUG
• LID GASKET IS BLACK NEOPRENE RUBBER
• STRAIN RELIEF IS MACHINED BRASS, COMPRESSION TYPE FOR 16-3 OR 10-3 TYPE STOW SUBMERSIBLE CABLE AND ARE FACTORY INSTALLED
• U.L. LISTED FOR BOTH DRY AND UNDERWATER APPLICATIONS

NOTES:
1. ALL UNDERWATER JUNCTION BOXES MUST BE FILLED WITH AN APPROVED POTTING COMPOUND TO PREVENT MOISTURE FROM ENTERING OR PASSING THROUGH THE BOX.
2. MUST BE INSTALLED IN ACCORDANCE WITH THE NATIONAL ELECTRIC CODE.

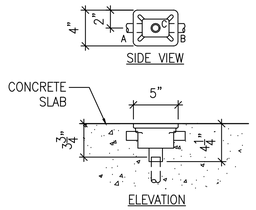

DECK MOUNTED J-BOX DETAIL

SCALE: NONE

9 / SP410

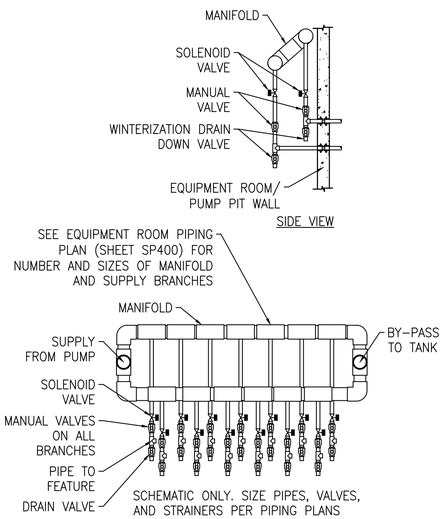

SPRAY FEATURES MANIFOLD DETAIL

SCALE: NONE

10 / SP410

BID SET

blu line designs
planning | landscape architecture | design
8719 S. Sandy Parkway
Sandy, UT 84070
p 801.913.7994

CLIENT

FARMINGTON CITY
CONTACT: SYLVIA CLARK
PH: 801.939.9295
EMAIL:
SCLARK@FARMINGTON.UTAH.GOV

FARMINGTON

Water Design Inc
6740 South 1300 East
Salt Lake City, UT 84121
9012614009
www.waterdesigninc.com

The entire contents of the attached documents, including all sketches, plans, studies, drawings, schedules and specifications and all copyrights therein are, and shall remain the property of Water Design Inc. Incorporated. The documents and their contents may not be used, photocopied or reproduced digitally, electronically or in any other manner without the express prior written consent of Water Design Incorporated.

IVY ACRES PARK

1397 WEST COOK LANE
FARMINGTON, UT

REVISIONS

NO.	APPROVED	DESCRIPTION

LICENSED PROFESSIONAL ENGINEER
CHARLES ROSS ANDERSON
145589-2203
STATE OF UTAH
03/06/2024

Designed By:	BP
Drawn By:	TOS
Date:	03/06/2024
Checked By:	BA
Project No:	23-747FS

Drawing Title

CIRCULATION EQUIPMENT DETAILS

Drawing number

SP410

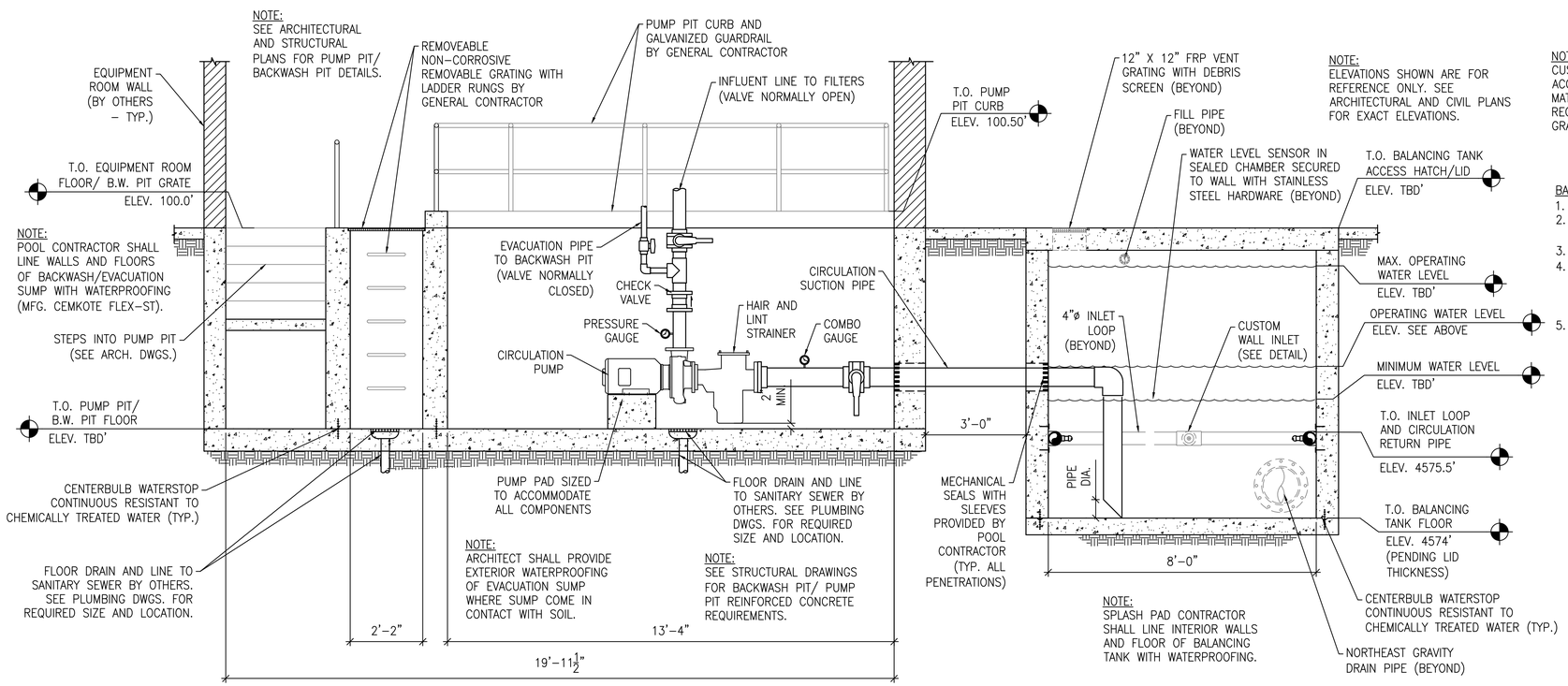

PUMP PIT/ BACKWASH PIT / BALANCING TANK SECTION

SCALE: 1/2" = 1'-0"

A SP420

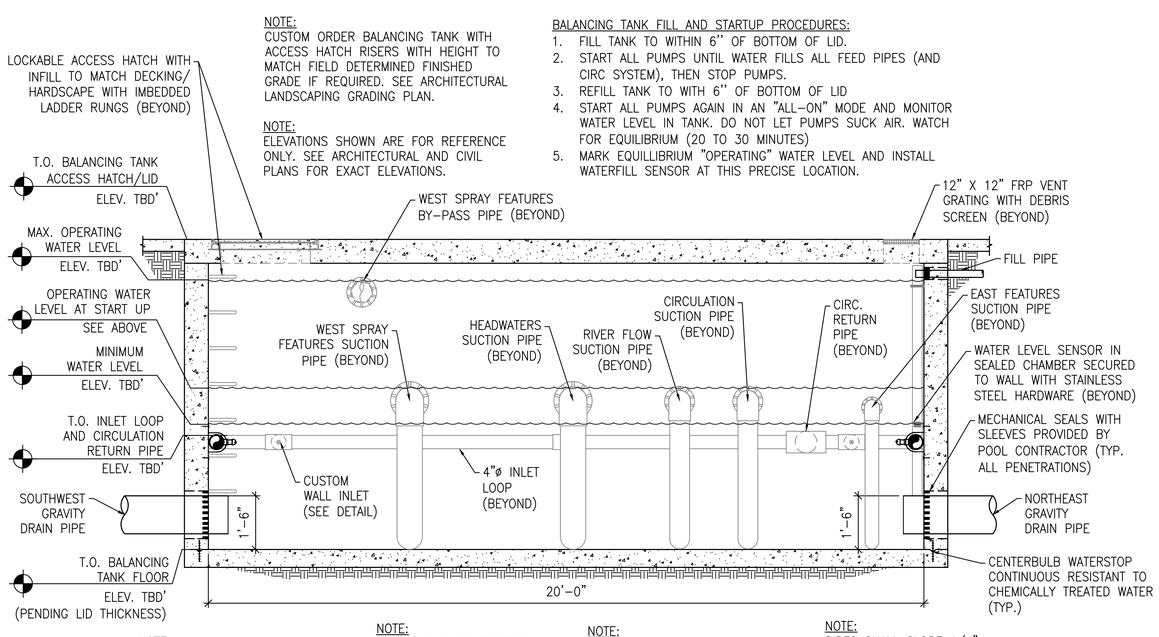

BALANCING TANK SECTION

SCALE: 1/2" = 1'-0"

B SP420

blu line designs
planning | landscape architecture | design
8719 S. Sandy Parkway
Sandy, UT 84070
p 801.913.7994

CLIENT

FARMINGTON CITY
CONTACT: SYLVIA CLARK
PH: 801.939.9295
EMAIL:
SCLARK@FARMINGTON.UTAH.GOV

FARMINGTON

Water Design Inc
6740 South 1300 East
Salt Lake City, UT 84121
8012614029
www.waterdesigninc.com

The entire contents of the attached documents, including all sketches, plans, studies, drawings, schedules and specifications and all copyrights therein are, and shall remain the property of Water Design Inc. Incorporated. The documents and their contents may not be used, photocopied or reproduced digitally, electronically or in any other manner without the express prior written consent of Water Design Incorporated.

IVY ACRES PARK

1397 WEST COOK LANE
FARMINGTON, UT

REVISIONS

NO.	symmetry	DESCRIPTION

LICENSED PROFESSIONAL ENGINEER
CHARLES ROSS ANDERSON
145589-2203
STATE OF UTAH
03/06/2024

Designed By:	BP
Drawn By:	TOS
Date:	03/06/2024
Checked By:	BA
Project No:	23-747FS

Drawing Title

EQUIPMENT ROOM AND BALANCING TANK SECTIONS AND DETAILS

Drawing number

SP420

BID SET

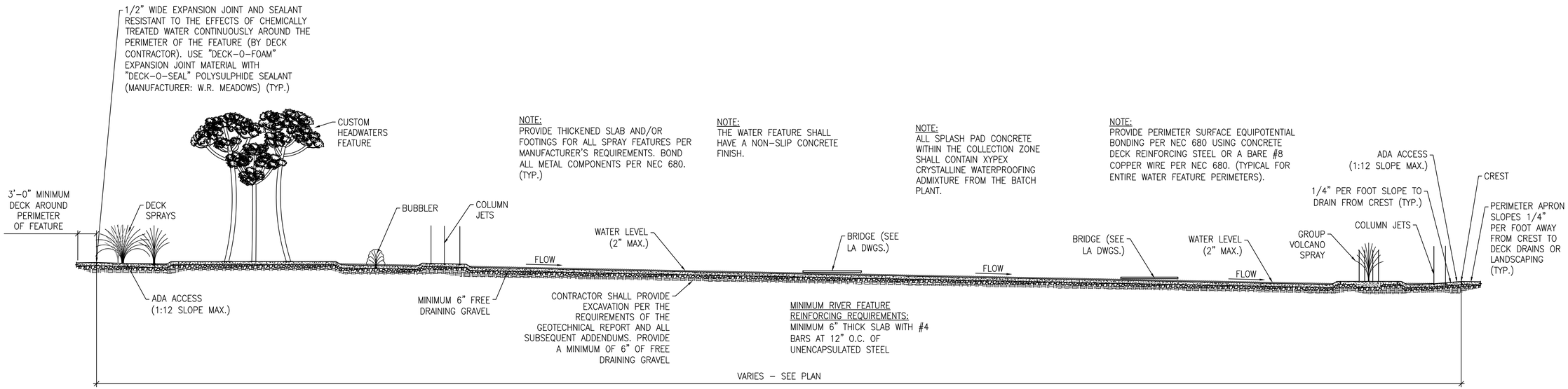

INTERACTIVE WATER FEATURE SECTION EAST TO WEST

SCALE: 1/8"=1'-0"

A / SP500

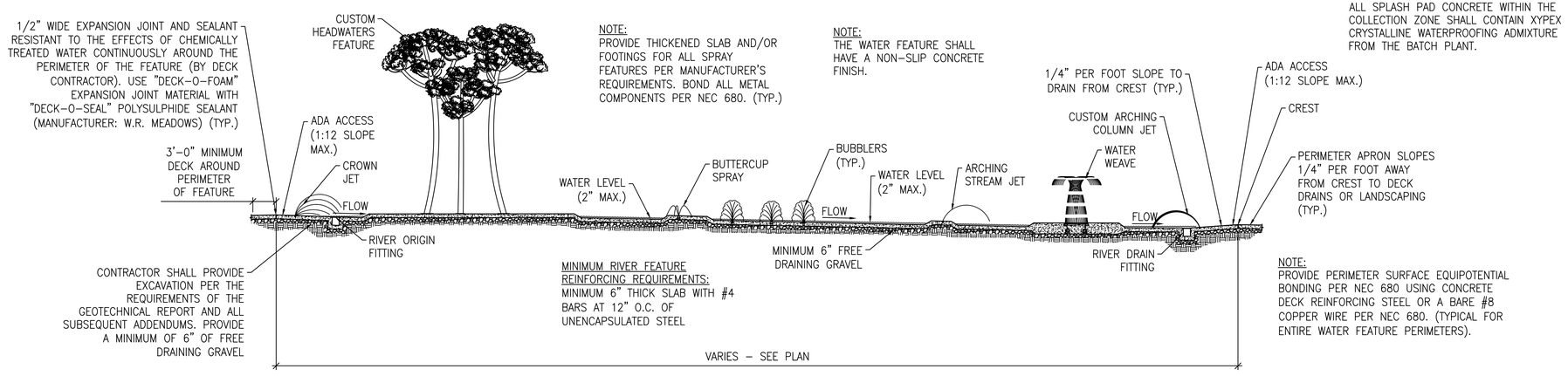

INTERACTIVE WATER FEATURE SECTION NORTH TO SOUTH

SCALE: 1/8"=1'-0"

B / SP500

SEE SHEET SP501 FOR STRUCTURAL NOTES AND DETAILS

blu line designs
planning | landscape architecture | design
8719 S. Sandy Parkway
Sandy, UT 84070
p 801.913.7994

CLIENT

FARMINGTON CITY
CONTACT: SYLVIA CLARK
PH: 801.939.9295
EMAIL:
SCLARK@FARMINGTON.UTAH.GOV

FARMINGTON

Water Design Inc
6740 South 1300 East
Salt Lake City, UT 84121
801.261.4009
www.waterdesigninc.com

The entire contents of the attached documents, including all sketches, plans, studies, drawings, schedules and specifications and all copyrights therein are, and shall remain the property of Water Design Inc. (Designer). The documents and their contents may not be used, photocopied or reproduced digitally, electronically or in any other manner without the express prior written consent of Water Design Incorporated.

IVY ACRES PARK

1397 WEST COOK LANE
FARMINGTON, UT

REVISIONS

NO.	APPROVAL	DESCRIPTION

LICENSED PROFESSIONAL ENGINEER
CHARLES ROSS ANDERSON
145589-2203
STATE OF UTAH
03/06/2024

Designed By:	BP
Drawn By:	TOS
Date:	03/06/2024
Checked By:	BA
Project No:	23-747FS

Drawing Title

SECTIONS

Drawing number

SP500

BID SET

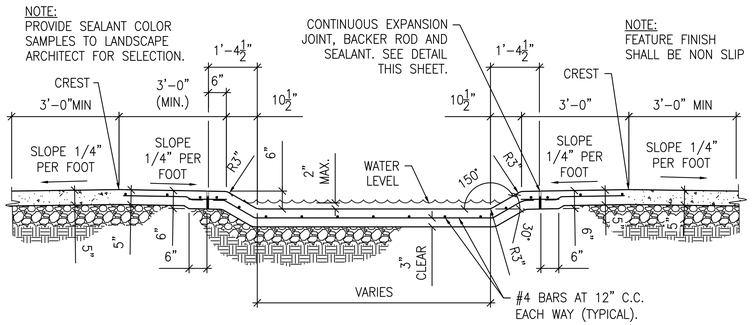

TYPICAL REINFORCING AT RIVER DETAIL

SCALE: 1/2" = 1'-0"

1 SP501

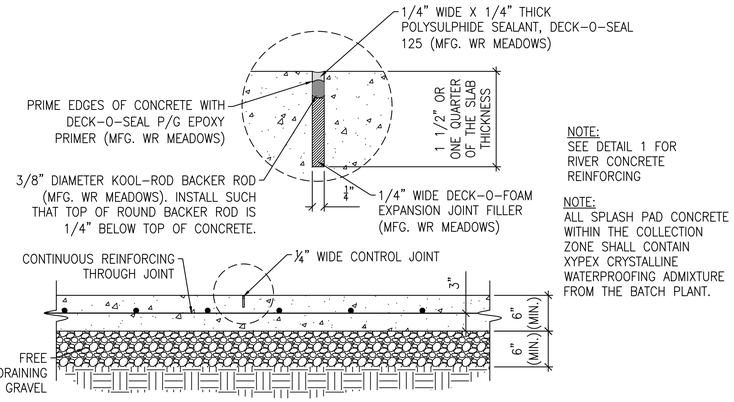

NOTE:
SEE DETAIL 1 FOR RIVER CONCRETE REINFORCING

NOTE:
ALL SPLASH PAD CONCRETE WITHIN THE COLLECTION ZONE SHALL CONTAIN XYPEX CRYSTALLINE WATERPROOFING ADMIXTURE FROM THE BATCH PLANT.

SAW CUT CONTROL JOINT DETAIL

SCALE: 1" = 1'-0"

3 SP501

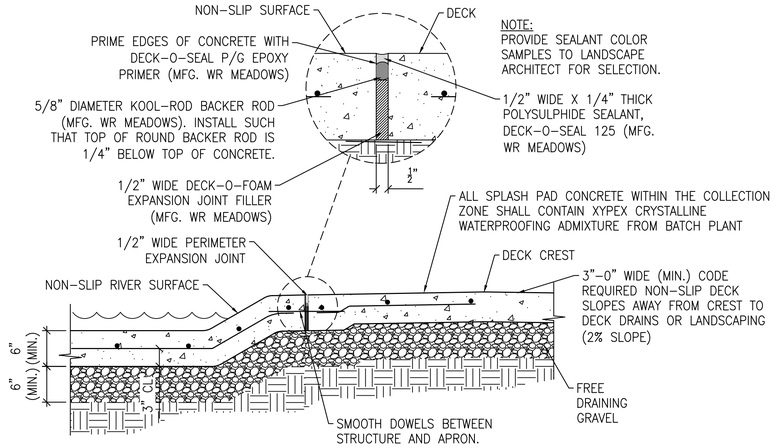

NOTE:
PROVIDE SEALANT COLOR SAMPLES TO LANDSCAPE ARCHITECT FOR SELECTION.

PERIMETER EXPANSION JOINT DETAIL

SCALE: 1" = 1'-0"

2 SP501

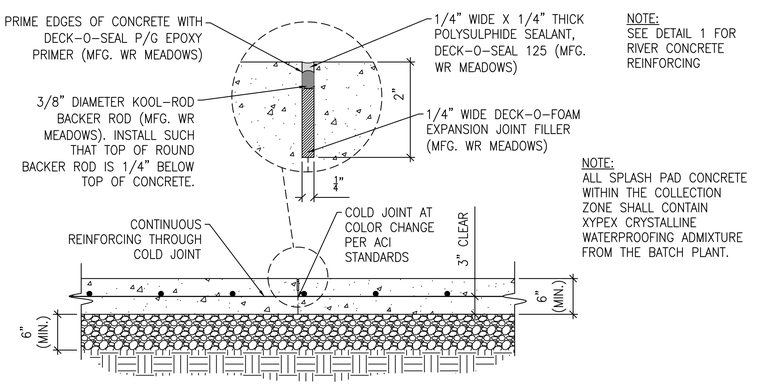

NOTE:
SEE DETAIL 1 FOR RIVER CONCRETE REINFORCING

NOTE:
ALL SPLASH PAD CONCRETE WITHIN THE COLLECTION ZONE SHALL CONTAIN XYPEX CRYSTALLINE WATERPROOFING ADMIXTURE FROM THE BATCH PLANT.

COLD JOINT DETAIL

SCALE: 1" = 1'-0"

4 SP501

SPLASH PAD STRUCTURAL ITEMS:

1. SPLASH PADS AND INTERACTIVE WATER FEATURES BUILT USING THIS PLAN SHALL CONFORM TO APPLICABLE DESIGN CODES INCLUDING THE MOST CURRENT IBC AS ADOPTED BY THE CITY AND COUNTY WHERE THE WATER FEATURE IS BEING INSTALLED.
2. ALL WORK SHALL BE IN STRICT ACCORDANCE WITH THE LATEST EDITION OF THE INTERNATIONAL BUILDING CODE, UNIFORM BUILDING CODE, ACI-318, ACI-506R (GUIDE TO SHOTCRETE), ACI COMPILATION NO. 6, AND LOCAL ORDINANCES. THE MOST STRICT CODE SHALL TAKE PRECEDENCE.
3. INTERACTIVE WATER FEATURE CONTRACTOR SHALL VERIFY ALL DIMENSIONS AND CONDITIONS ON SITE. THE ENGINEER SHALL BE CONSULTED IF ANY SURCHARGE OR CONDITIONS DIFFER FROM DETAILS SHOWN HEREIN.
4. WATER FEATURE CONTRACTOR SHALL BE RESPONSIBLE TO ASSURE ALL DIMENSIONS AND SETBACKS OF THE WATER FEATURE CONFORM TO THE REQUIREMENTS OF THE APPROVING BUILDING OFFICIALS FOR THE LOCATION WHERE THE WATER FEATURE IS BEING BUILT. THIS INCLUDES BOTH EXISTING STRUCTURES AND PROPERTY LINES.
5. THE WATER FEATURE MUST FOUNDED ENTIRELY IN ORIGINAL UNDISTURBED NATIVE SOIL OR FOUNDED ENTIRELY IN COMPACTED FILL SOIL WHICH HAS BEEN COMPACTED TO 98% RELATIVE DENSITY. COMPACTED FILL SOIL MUST BE CERTIFIED BY A LICENSED SOILS ENGINEER.
6. SOILS FOR WATER FEATURE / RIVER FEATURE SHALL HAVE A MINIMUM SOILS BEARING VALUE OF 1500 LBS. PER SQUARE FOOT. THE WATER FEATURE CONTRACTOR IS RESPONSIBLE FOR SUB-GRADE PREPARATION SO THAT SETTLEMENT IS NEGLIGIBLE TO AVOID UNANTICIPATED STRESS ON CONCRETE WHICH CAN CAUSE CRACKING.
7. THE SITE SHALL BE PREPARED PER THE RECOMMENDATIONS OF THE GEOTECHNICAL REPORT..
8. WATER FEATURE CONTRACTOR SHALL PROVIDE ALL SHORING AS REQUIRED.
9. WATER FEATURE CONTRACTOR SHALL VERIFY ALL CONDITIONS AND DIMENSIONS PRIOR TO PLACING CONCRETE.
10. CONCRETE SHALL BE MACHINE MIXED SUCH THAT THE 28 DAY COMPRESSIVE STRENGTH IS 4000 PSI. CONCRETE SHALL BE KEPT CONSTANTLY WET FOR A MINIMUM PERIOD OF SEVEN DAYS, OR AS NECESSARY TO INSURE PROPER INITIAL CURE OR ADEQUATE COVERINGS WITH PLASTIC SHEETING THROUGH THE CURING PERIOD. NO CURING COMPOUND WILL BE ALLOWED. NOTE THAT PROVISIONS SHALL BE MADE TO HOLD THE REINFORCING BARS IN PLACE DURING PLACEMENT OF CONCRETE TO MAINTAIN CLEARANCE BETWEEN THE STEEL AND THE FACE OF CONCRETE IN ACCORDANCE WITH THE IBC CODE REQUIREMENTS.
11. REINFORCING BARS SHALL BE DEFORMED INTERMEDIATE GRADE AND CONFORM TO ASTM DESIGN, A615, GRADE AS INDICATED ON THE REINFORCING SCHEDULE. THE REINFORCING BARS SHALL BE LAPPED A MINIMUM OF 40 BAR DIAMETERS. ALL REINFORCING STEEL SHALL BE SIZES OF DEFORMED BARS EQUAL TO THE REQUIREMENTS OF THE "STANDARD SPECIFICATION FOR BILLET STEEL, CONCRETE REINFORCEMENT".
12. A 3" CLEARANCE MUST BE MAINTAINED BETWEEN THE REINFORCING STEEL REBAR AND THE EARTH.
13. ALL REINFORCING STEEL SHALL BE IN PLACE BEFORE CONCRETE PLACING IS COMMENCED AND SHALL BE NEW, FREE FROM DIRT, OIL, PAINT AND MILL SCALE AND SHALL BE POSITIONED AND OF THE SIZE INDICATED ON THE DRAWINGS, AND SHALL BE SECURED BY NOT LESS THAN 16 GAUGE ANNEALED TIE WIRE. ALL REINFORCEMENT BARS SHALL BE DETAILED, BOLSTERED AND SUPPORTED IN ACCORDANCE WITH ACI STANDARD 315. SPLICES SHALL BE STAGGERED A MINIMUM OF 4'-0".
14. ALL PIPING SHALL MAINTAIN A MINIMUM ONE (1) INCH CLEARANCE FROM REINFORCING STEEL BARS.
15. ALL CONCRETE PLACEMENT WORK SHALL BE IN ACCORDANCE WITH ACI-301 AND ACI-302. WHEN CONCRETE IS PLACED DURING HOT WEATHER CONFORM TO ACI-305R. WHEN PLACED DURING COLD WEATHER CONFORM TO ACI-306R.
16. IF ENGINEER'S STAMP OF SIGNATURE IS ON THE PLOT PLAN, IT IS INTENDED TO REFER ONLY TO THOSE STRUCTURAL FEATURES CONTAINED ON THIS PLAN.
17. THE DESIGN CONTAINED ON THIS PLAN IS NOT APPROVED FOR AREAS WITH COLLAPSIBLE SOILS OR EXPANSIVE SOILS. NEAR SURFACE COLLAPSIBLE SOILS SHALL BE REMOVED..
18. BOTTOM OF ALL WATER FEATURE FOOTINGS SHALL BE AT LEAST 2 FEET 6 INCHES BELOW GRADE AND BELOW FROST LEVEL.
19. ALL CEMENT FOR CONCRETE WORK SHALL CONFORM TO REQUIREMENTS OF THE STANDARD SPECIFICATIONS FOR THE "PORTLAND CEMENT", SERIAL DESIGNATION C-150 OF THE ASTM AND SHALL BE TYPE I/IA OR AS OTHERWISE REQUIRED IN A SOILS REPORT.
20. WATER USED IN CONCRETE SHALL BE POTABLE. CALCIUM CHLORIDE, ALUMINUM CONDUIT, PRODUCTS CONTAINING ALUMINUM OR ANY OTHER MATERIAL INJURIOUS TO CONCRETE SHALL NOT BE USED IN CONCRETE.
21. ALL STEEL & ELECTRICAL ITEMS IN OR NEAR THE WATER FEATURE SHALL BE BONDED & GROUNDED IN ACCORDANCE WITH THE MOST CURRENT NATIONAL ELECTRIC CODE (N.E.C.) ARTICLE 680 OR CURRENT ADOPTED N.E.C.
22. AFTER PLACING WATER FEATURE REINFORCING, BUT BEFORE PLACING CONCRETE SURFACES, THE CONTRACTOR SHALL INSURE PROPER BONDING AND GROUNDING CIRCUITS HAVE BEEN PROVIDED AND TESTED FOR CONTINUITY BY THE ELECTRICAL CONTRACTOR TO STEEL REINFORCEMENT. SLABS AND ALL OTHER METAL ITEMS IN OR AROUND THE WATER FEATURE AS REQUIRED BY THE CURRENT ADOPTED NATIONAL ELECTRIC CODE ARTICLE 680. NO CONCRETE SHALL BE PLACED UNTIL THIS REQUIREMENT IS COMPLIED WITH. SEE DIVISION 16.
23. CONTRACTOR SHALL REFER AND FOLLOW THE RECOMMENDATIONS OF THE GEOTECHNICAL REPORT.

SPLASH PAD STRUCTURAL CONCRETE NOTES AND SPECIFICATIONS:

1. ALL CONCRETE SHALL HAVE A COMPRESSIVE STRENGTH EQUAL TO 4000 PSI WITHIN 28 DAYS AFTER PLACING OWNER WILL HIRE A TESTING LABORATORY TO TEST ALL CONCRETE. OWNER TO PROVIDE A COPY OF TEST REPORTS FOR REVIEW. CONCRETE DESIGNED @ 4000 PSI.
2. THE SAMPLES FOR TESTS OF EACH STRENGTH OF CONCRETE SHALL BE TAKEN NOT LESS THAN ONCE A DAY, NOR LESS THAN ONCE FOR EACH 150 CUBIC YARD OF CONCRETE, NOR LESS THAN ONCE FOR EACH 5000 SQUARE FT. OF SURFACE AREA FOR SLABS OR WALLS, NOR LESS THAN FIVE TIMES THROUGHOUT THE PROJECT.
3. NORMAL WEIGHT AGGREGATES SHALL COMPLY WITH ASTM C-33 AND SHALL BE PRODUCE CONCRETE WEIGHING WITHIN 145 TO 155 POUNDS PER CUBIC FOOT. WATER USED IN CONCRETE SHALL BE POTABLE. CALCIUM CHLORIDE, ALUMINUM CONDUIT, PRODUCT CONTAINING ALUMINUM OR ANY OTHER MATERIAL INJURIOUS TO CONCRETE SHALL NOT BE USED IN CONCRETE.
4. METAL REINFORCEMENT SHALL BE DEFORMED TYPE BARS AND SHALL CONFORM TO ASTM A-615 GRADE 60 WITH MINIMUM YIELD STRENGTH OF 60 KSI. ALL REINFORCEMENT BARS SHALL BE DETAILED, BOLSTERED AND SUPPORTED IN ACCORDANCE WITH ACI STANDARD 315. SUBMIT SHOP DRAWINGS FOR REVIEW PRIOR TO FABRICATION. PROVIDE CONCRETE COVER FOR REBAR AS FOLLOWS:
5. CONCRETE CAST AGAINST AND PERMANENTLY EXPOSED TO EARTH 3.00 INCHES
6. CONCRETE EXPOSED TO EARTH OR WEATHER, #5 BARS AND SMALLER 1.50 INCHES
7. CONCRETE EXPOSED TO EARTH OR WEATHER, #5 BARS AND LARGER 2.00 INCHES
8. CONCRETE NOT EXPOSED TO EARTH OR WEATHER, SLABS, WALLS & JOISTS 0.75 INCHES
9. CONCRETE NOT EXPOSED TO EARTH OR WEATHER, BEAMS AND COLUMNS 1.50 INCHES
10. ALL FORMWORK COMPLY WITH REQUIREMENTS OF ACI STANDARD PUBLICATION No. 347. THE CONTRACTOR SHALL BE RESPONSIBLE FOR DESIGN, CARE, DETAILING, PLACEMENT AND REMOVAL OF FORMWORK AND SHORING.
11. TEMPERATURE REINFORCEMENT SPLICES IN SLABS SHALL LAP 40 BAR DIAMETER. ALL OTHER SPLICES SHALL BE AS SHOWN OR NOTED ON DRAWINGS. ADDITIONAL SPLICES, IF REQUIRED, SHALL COMPLY WITH REQUIREMENTS OF SECTION 1901 OF THE CURRENT IBC, AND SHALL BE APPROVED BY ENGINEER.
12. UNLESS NOTED OTHERWISE ALL CONCRETE SLABS ON GRADE SHALL BE MIN. 6 INCHES THICK AND REINFORCED WITH #4@12 INCH. ON CENTER. PROVIDE CHAIRS AT 36 INCHES ON CENTER IN EACH DIRECTION TO HOLD THE BARS 3 INCHES FROM SOIL. SEE WATER FEATURE DETAILS FOR ADDITIONAL SLAB THICKNESS, FOOTING AND REINFORCING REQUIRED, WHICH MAY DIFFER FROM THIS LISTED MINIMUM.
13. ALL CEMENT FOR CONCRETE WORK SHALL CONFORM TO REQUIREMENTS OF THE STANDARD SPECIFICATIONS FOR THE "PORTLAND CEMENT", SERIAL DESIGNATION C-150 OF THE ASTM AND SHALL BE TYPE I.
14. ALL CONCRETE FINISH FOR SLABS SHALL BE FINISHED PER SPECIFICATION AND PLANS AND A MOCKUP SUBMITTED.
15. CRACKS, JOINTS AND OPEN GAPS WITHIN THE CONCRETE SHALL NOT EXCEED 1/16" WIDE. ALL CRACKS AND/OR SEPARATIONS WITHIN THE CONCRETE SHALL BE NOTCHED OUT AND FILLED WITH EPOXY FILLER TO CREATE A SMOOTH SEAMLESS SURFACE ACROSS THE REPAIRED CRACK/SEPARATION. CRACKS GREATER THAN 3/32" SHALL BE REVIEWED BY THE ENGINEER FOR REPAIR DIRECTIONS/PROCEDURES.
16. ALL CONCRETE SHALL CURE FOR MINIMUM 28 DAYS BEFORE FINISH IS INSTALLED. JUST PRIOR TO INSTALLATION OF FINISH THE CONTRACTOR SHALL INSPECT THE CONCRETE FOR CRACKS. ALL CRACKS SHALL BE ROUTED AND REPAIRED WITH AN EPOXY FILLER AS DEFINED ABOVE. ALL REPAIR WORK SHALL PROVIDE A SMOOTH, SEAMLESS SURFACE ACROSS THE REPAIRED CRACKS.
17. WATER FEATURE FLOOR SHALL BE FREE FROM HONEY COMBING, SPILLS, VOIDS AND OTHER DEFECTS. THE SUB GRADE SHALL BE THOROUGHLY WETTED BEFORE CONCRETE IS PLACED, THE WATER FEATURE FLOOR SHALL BE CAST IN PLACE, WITH NO MORE THAN A 3 1/2" SLUMP, AND A MINIMUM 28 DAY STRENGTH OF 4000 PSI. THE CONCRETE SHALL HAVE A WATER REDUCING RETARDER ADDED, PLASTIMENT OR EQUAL, AT A MINIMUM RATE OF TWO FLUID OUNCES PER BAG OF CEMENT, PER MANUFACTURERS RECOMMENDATIONS ACCORDING TO THE DAY TIME TEMPERATURES. EXACT PROPORTIONS OF FOUR TO EIGHT FLUID OUNCES SHALL BE DETERMINED BY TEST AT THE JOB SITE. THE CONCRETE MIX SHALL CONTAIN AN AVERAGE OF 3% AIR ENTRAINMENT. AFTER FINISHING, THE FLOOR SHALL BE COVERED WITH PLASTIC SHEETING FOR A PERIOD OF FIVE DAYS. NO CURING COMPOUND WILL BE ALLOWED.
18. ALL SPLASH PAD CONCRETE WITHIN THE COLLECTION ZONE SHALL CONTAIN XYPEX CRYSTALLINE WATERPROOFING ADMIXTURE FROM THE BATCH PLANT.

SPLASH PAD SUBGRADE PREPARATION NOTES:

1. THE INTERACTIVE WATER FEATURE AND SUPPORTIVE PIPING AREA SHALL BE PREPARED PER THE GEOTECHNICAL ENGINEER'S REPORT AND ALL SUPPLEMENTAL MEMOS/REPORTS.
2. ALL COLLAPSIBLE SOILS, SOFT SPOTS, OVER-CONSOLIDATED FILLS, UNDOCUMENTED FILL, NON-ENGINEERED FILLS, MAN-PLACED NON-STRUCTURAL FILLS, VOIDS, TOPSOIL, DELETERIOUS MATERIALS, AND CONSTRUCTION DEBRIS SHALL BE REMOVED AND REPLACED WITH COMPACTED STRUCTURAL FILL. NO CONCRETE SHALL BE PLACED ON MUDDY / FROZEN SOIL OR WITHIN PONDED WATER.
3. CLAYEY SOILS, WHICH ARE POTENTIALLY COLLAPSIBLE WHEN SUBJECTED TO WATER, SHALL BE REMOVED IN THE AREA OF THE INTERACTIVE WATER FEATURE. REMOVE ALL POTENTIALLY COLLAPSIBLE SOILS FROM UNDER THE WATER FEATURE AND PIPING AREAS. THE GEOTECHNICAL ENGINEER TO OBSERVE AND DETERMINE COLLAPSIBLE SOILS.
4. STRUCTURAL FILL MATERIAL SHALL BE A MINIMUM 18 INCHES THICK, TOPPED BY 6 INCHES OF FREE DRAINING GRAVEL. THE STRUCTURAL FILL SHALL BE PROVIDED AND PLACED IN ACCORDANCE WITH A GEOTECHNICAL ENGINEER'S SPECIFICATION FOR LIFT THICKNESS SIZE, COMPACTION, MOISTURE, ETC. ALL STRUCTURAL FILL SHALL BE TESTED.
5. STRUCTURAL FILL SHALL BE WELL GRADED SAND/GRAVEL MIXTURE, WITH MAXIMUM PARTICLE SIZE OF 4 INCHES, A MINIMUM 70% PASSING 3/4-INCH SIEVE, A MAXIMUM 20% PASSING THE NO. 200 SIEVE, AND A MAXIMUM PLASTICITY INDEX OF 10.
6. ALL FOOTINGS AND SLABS ARE PROPORTIONED AND DESIGNED FOR MAX. 2500 PSF SOIL BEARING.
7. ALL FOOTINGS SHOULD BE UNDERLAIN BY A MINIMUM OF 2 FEET OF STRUCTURAL FILL. THE MAXIMUM DEPTH OF STRUCTURAL FILL USED FOR BACKFILL IS 6 FEET.
8. THE SITE GRADING FILL THICKNESS USING ON-SITE SILT/CLAY SOILS SHALL NOT EXCEED 3 FEET BELOW STRUCTURES, TO MINIMIZE POTENTIAL SETTLEMENTS.
9. ALL BACKFILLS THAT WILL SUPPORT ANY STRUCTURE (SLAB ON GRADE, STAIRS, ETC.) SHALL BE STRUCTURAL COMPACTED FILL.
10. CONTRACTOR TO INSURE POSITIVE DRAINAGE AWAY FROM STRUCTURE DURING CONSTRUCTION AND AFTER FINAL GRADING.
11. CONTRACTOR IS RESPONSIBLE TO LOCATE ALL EXISTING UTILITIES, ETC. WHETHER SHOWN HEREON OR NOT TO PROTECT THEM FROM DAMAGE AND BEAR THE COST OF ALL REPAIRS OR REPLACEMENT IN CONJUNCTION WITH THE PROSECUTION OF THIS WORK.
12. SIX (6) INCHES OF FREE-DRAINING GRAVEL SHALL BE PLACED UNDER ALL WATER FEATURE SLABS-ON-GRADE.
13. PIPE TRENCHES SHALL UTILIZE SAND BEDDING FILL MATERIAL THAT MEETS CURRENT APWA REQUIREMENTS.
14. THE SITE SHOULD BE OBSERVED BY A CMT GEOTECHNICAL ENGINEER TO ASSESS THAT SUITABLE NATURAL SOILS HAVE BEEN EXPOSED AND ANY DELETERIOUS MATERIALS, LOOSE AND/OR DISTURBED SOILS HAVE BEEN REMOVED, PRIOR TO PLACING SITE GRADING FILLS, FOOTINGS, SLABS AND PAVEMENTS.

SPLASH PAD GENERAL NOTES:

1. ALL CODES STANDARDS AND SPECIFICATIONS REFERRED TO IN THESE NOTES ARE TO BE PART OF THESE NOTES AS IF FULLY SET FORTH HEREIN. UNLESS NOTED OTHERWISE, THESE SHALL BE THE LATEST EDITION AND SUPPLEMENTS.
2. ALL DETAILS AND NOTES ON DRAWINGS ARE INTENDED TO BE TYPICAL AND SHALL APPLY TO SIMILAR SITUATIONS ELSEWHERE UNLESS NOTED OR SHOWN OTHERWISE. CONSTRUCTION NOT SPECIFICALLY SHOWN, SHALL BE ACCOMPLISHED PER MINIMUM REQUIREMENTS OF THE CURRENT ADOPTED IBC.
3. CONTRACTOR SHALL COMPARE ALL DIMENSIONS AND CONDITIONS ON CONTRACT DOCUMENTS AND AT THE SITE. ANY OMISSION OR CONFLICT SHALL BE BROUGHT TO THE ATTENTION OF THE ARCHITECT AND/OR ENGINEER. IN CASE OF ANY CONFLICT FOLLOW THE MOST STRINGENT REQUIREMENTS AS DIRECTED BY ARCHITECT AND/OR ENGINEER.
4. CONTRACTOR SHALL NOTIFY ENGINEER AT LEAST TWENTY FOUR HOURS PRIOR TO PLACING CONCRETE IN ANY FOOTING OR SLAB OR BEAM OR COLUMN OR CLOSING ANY WALL FORMS.
5. CONTRACTOR SHALL COORDINATE WITH ALL TRADES ALL ITEMS THAT ARE TO BE INTEGRATED INTO THE STRUCTURAL SYSTEM. ORDER OF CONSTRUCTION TO BE THE RESPONSIBILITY OF THE CONTRACTOR. HE SHALL PROVIDE ALL ITEMS NECESSARY FOR HIS CHOSEN PROCEDURE.
6. UNTIL ALL PERMANENT MEMBERS, INCLUDING WALLS, SLABS, FLOORS & ROOF ARE IN PLACE AND ALL CONNECTIONS ARE COMPLETED, STABILITY OF STRUCTURE AND ALL PARTS THEREOF SHALL BE CONTRACTOR'S RESPONSIBILITY. DURING CONSTRUCTION CONTRACTOR SHALL KEEP THE DESIGN, ADEQUACY & SAFETY OR ERECTION BRACING, SHORING, TEMPORARY SUPPORTS, ETC. IS THE SOLE RESPONSIBILITY OF THE CONTRACTOR AND HAS NOT BEEN CONSIDERED BY THE ENGINEER.
7. ANY DEVIATION FROM CONTRACT DOCUMENTS SHALL BE APPROVED BY ARCHITECT AND SHALL BE SO DOCUMENTED. THIS DOCUMENTATION SHALL BECOME PART OF CONTRACT DOCUMENTS. DEVIATION FROM CONTRACT DOCUMENTS SHALL NOT BE ALLOWED ON SHOP DRAWINGS.
8. CONTRACTOR SHALL REVIEW AND VERIFY ALL SHOP DRAWINGS TO ASSURE THEY COMPLY WITH REQUIREMENTS OF THE DOCUMENTS. ENGINEER WILL REVIEW THE SHOP DRAWINGS FOR GENERAL CONFORMANCE WITH DESIGN CONCEPT. THIS REVIEW BY THE ENGINEER SHALL NOT BE CONSTRUED AS APPROVAL.
9. OBSERVATION VISITS TO THE SITE BY STRUCTURAL ENGINEER'S FIELD REPRESENTATIVES SHALL NOT BE CONSTRUED AS INSPECTION OR APPROVAL OF CONSTRUCTION.
10. ALL MATERIALS & WORKMANSHIP SHALL CONFORM TO THE MINIMUM REQUIREMENTS OF ALL GOVERNING CODES.

CONCRETE WATERPROOFING NOTE

ALL CONCRETE WITHIN THE SPLASH PAD COLLECTION ZONE SHALL CONTAIN XYPEX CRYSTALLINE WATERPROOFING ADMIXTURE FROM THE BATCH PLANT

SPLASH PAD REINFORCING SCHEDULE

REINFORCING STEEL GRADE 40
PROVIDE # 4 BARS AT 12" O.C. EACH WAY (U.O.N.)
ALL STEEL LAPS SHALL BE MINIMUM 40 BAR DIAMETERS

blu line designs
planning | landscape architecture | design
8719 S. Sandy Parkway
Sandy, UT 84070
p 801.913.7994

CLIENT

FARMINGTON CITY
CONTACT: SYLVIA CLARK
PH: 801.939.9295
EMAIL:
SCLARK@FARMINGTON.UTAH.GOV

FARMINGTON

Water Design Inc
6740 South 1300 East
Salt Lake City, UT 84121
9012614009
www.waterdesigninc.com

The entire contents of the attached documents, including all sketches, plans, studies, drawings, schedules and specifications and all copyrights therein are, and shall remain the property of Water Design Inc. The documents and their contents may not be used, photocopied or reproduced digitally, electronically or in any other manner without the express prior written consent of Water Design Incorporated.

IVY ACRES PARK

1397 WEST COOK LANE
FARMINGTON, UT

REVISIONS

NO.	BY/PHASE	DESCRIPTION

LICENSED PROFESSIONAL ENGINEER
CHARLES ROSS ANDERSON
145589-2203
STATE OF UTAH
03/06/2024

Designed By:	BP
Drawn By:	TOS
Date:	03/06/2024
Checked By:	BA
Project No:	23-747FS

Drawing Title

STRUCTURAL DETAILS

Drawing number

SP501

BID SET

NO RUNNING TILES DETAIL

1 SP600

SCALE: 1/2"=1'-0"

"NO RUNNING" TILES TO BE EMBEDDED IN CONCRETE DECK BY GENERAL CONTRACTOR. COORDINATE BLOCKOUTS IN DECK WITH DECK CONTRACTOR. TILES SHALL BE ORIENTATED TO BE READ WHEN STANDING ON THE DECK FACING THE SPLASH PAD.

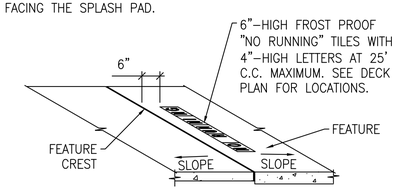

CUSTOM ARCHING COLUMN JET DETAIL

2 SP600

SCALE: 1"=1'-0"

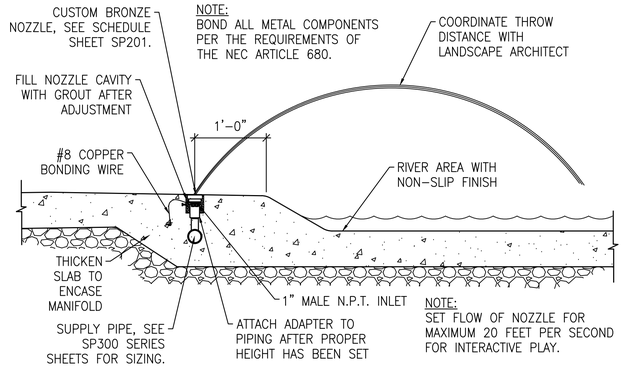

ARCHING STREAM JET DETAIL

3 SP600

SCALE: 3/4"=1'-0"

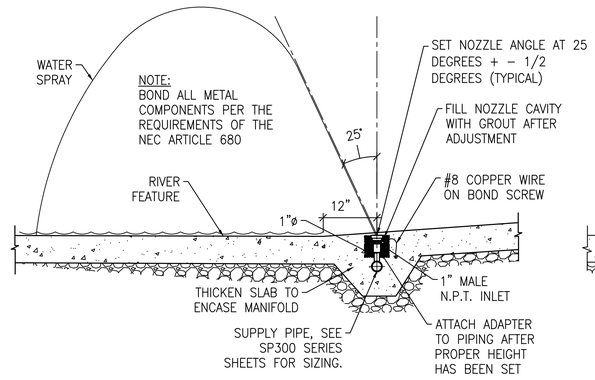

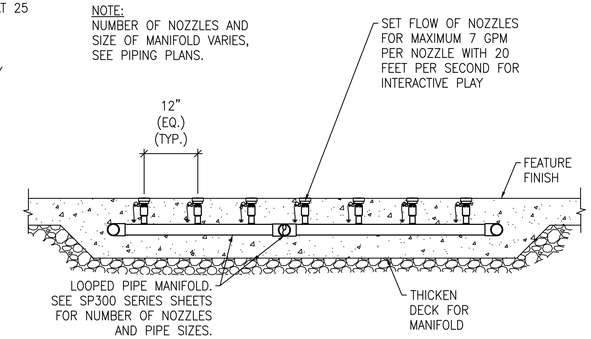

NO RUNNING TILES DETAIL

1 SP600

SCALE: 1/2"=1'-0"

NOTES:
1. REFER TO INSTALLATION INSTRUCTIONS SHIPPED WITH PRODUCT.
2. PROVIDE MOUNTING BRACKET KIT, PART #WMT108, ORDER SEPARATELY.

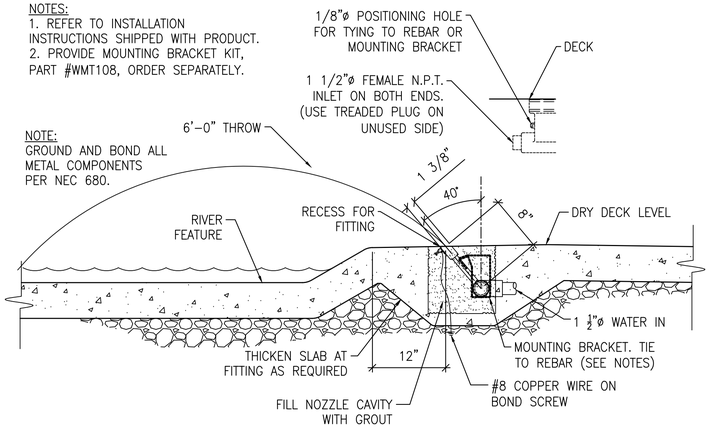

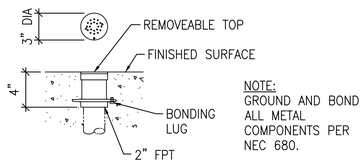

NOTE: GROUND AND BOND ALL METAL COMPONENTS PER NEC 680.

NOTES:
MODEL NO: EPF–200C
HOUSING: MACHINED CAST BRONZE WITH NATURAL FINISH, 2" INLET AND GROUNDING LUG
TOP PLATE: POLISHED BRASS
NOZZLE: PRECISION MACHINED ORIFICE

ARCHING STREAM JET DETAIL

3 SP600

SCALE: 3/4"=1'-0"

NOTE: BOND ALL METAL COMPONENTS PER THE REQUIREMENTS OF THE NEC ARTICLE 680

NOTE: SET FLOW OF NOZZLES FOR MAXIMUM 5.2 GPM PER NOZZLE WITH 20 FEET PER SECOND FOR INTERACTIVE PLAY.

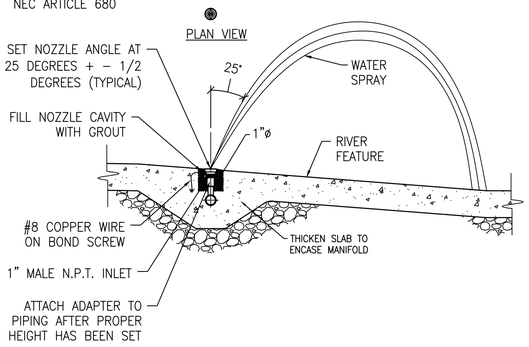

NOTE: MAXIMUM STREAM HEIGHT 6'–0"

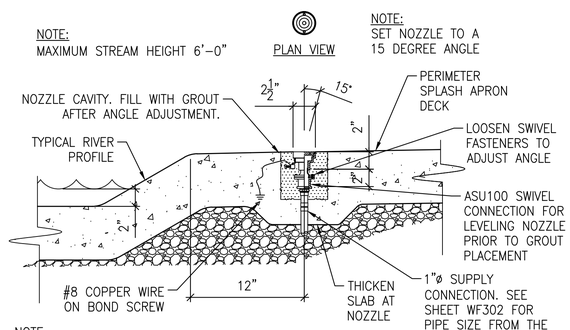

NOTE: BOND ALL METAL COMPONENTS PER NEC ARTICLE 680 OR CURRENT ADOPTED ELECTRICAL CODE.

FYREFLY JET DETAIL

4 SP600

SCALE: 3/4"=1'-0"


PLAN VIEW FOR NLG–202

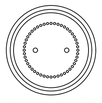
PLAN VIEW FOR NLG–203

NOTE: BOND ALL METAL COMPONENTS PER NEC ARTICLE 680 OR CURRENT ADOPTED ELECTRICAL CODE.

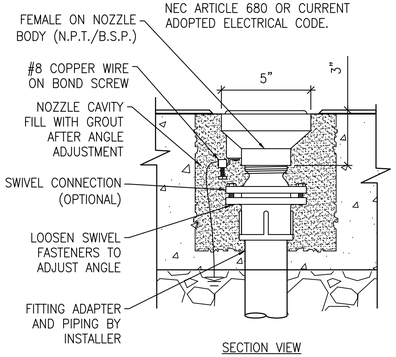

SECTION VIEW

UNDERWATER BUBBLER DETAIL

5 SP600

SCALE: 1 1/2"=1'-0"

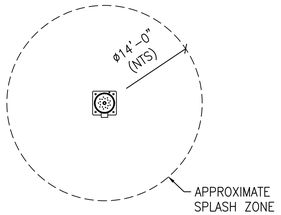

NOTE: GROUND AND BOND ALL METAL COMPONENTS PER NEC 680.

NOTE: WATER FEATURES SHALL BE INSTALLED PER MANUFACTURER'S RECOMMENDATIONS.

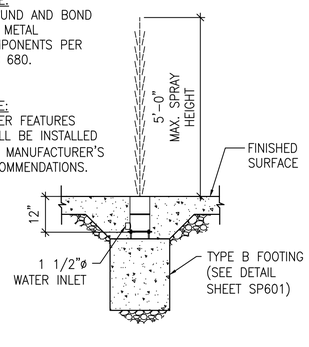

TRI-STREAM JET DETAIL

6 SP600

SCALE: 3/4"=1'-0"

NOTE: BOND ALL METAL COMPONENTS PER NEC ARTICLE 680 OR CURRENT ADOPTED ELECTRICAL CODE.

PLAN VIEW

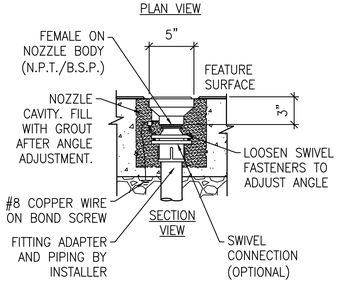

NOTES:
1. REFER TO FOUNTAIN SPECIFICATION.
2. REFER TO INSTRUCTION MANUAL SHIPPED WITH PRODUCT.
3. REQUIRES FINE SCREENING AT PUMP; 0.125" SUCTION STRAINER OPENINGS REQUIRED
4. CONSTRUCTION SHALL BE PVC OR STAINLESS STEEL WITH INDIVIDUALLY ADJUSTABLE BRASS NOZZLES, INLET FITTINGS, PLUGS AND COPPER LEGS AS REQUIRED.

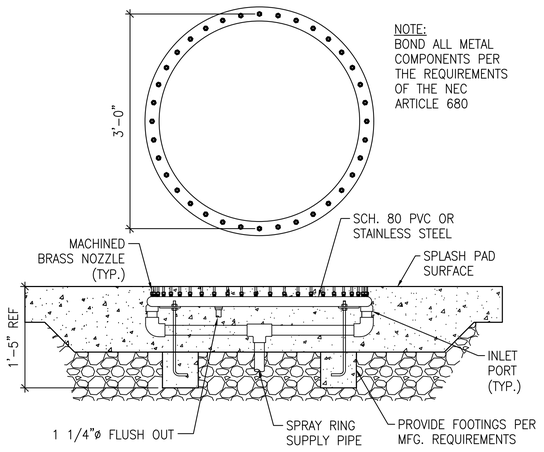

CROWN JET DETAIL

7 SP600

SCALE: 1 1/2"=1'-0"

NOTES:
- INSTALL PER MFG. RECOMMENDATIONS.
- BOND ALL METAL COMPONENTS PER THE REQUIREMENTS OF THE NEC ARTICLE 680

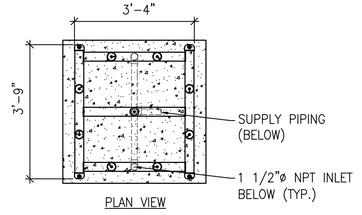

PLAN VIEW

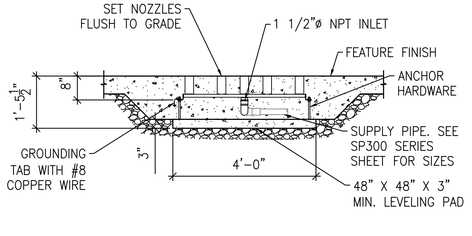

GROUND JETS DETAIL

8 SP600

SCALE: 3"=1'-0"

GUSHER SPRAY DETAIL

9 SP600

SCALE: 1/2"=1'-0"

COLUMN JET DETAIL

10 SP600

SCALE: 1 1/2"=1'-0"

WATER WEAVE DETAIL

11 SP600

SCALE: 1"=1'-0"

GROUP VOLUCANO NOZZLE DETAIL

12 SP600

SCALE: 1/2"=1'-0"

BID SET

blu line designs
planning | landscape architecture | design
8719 S. Sandy Parkway
Sandy, UT 84070
p 801.913.7994

CLIENT
FARMINGTON CITY
CONTACT: SYLVIA CLARK
PH: 801.939.9295
EMAIL: SCLARK@FARMINGTON.UTAH.GOV

FARMINGTON

Water Design Inc
6740 South 1300 East
Salt Lake City, UT 84121
8012614009
www.waterdesigninc.com

The entire contents of the attached documents, including all sketches, plans, studies, drawings, schedules and specifications and all copyrights therein are, and shall remain the property of Water Design Inc. The documents and their contents may not be used, photocopied or reproduced digitally, electronically or in any other manner without the express prior written consent of Water Design Incorporated.

IVY ACRES PARK

1397 WEST COOK LANE
FARMINGTON, UT

REVISIONS

NO.	DATE	DESCRIPTION

LICENSED PROFESSIONAL ENGINEER
CHARLES ROSS ANDERSON
145589-2203
STATE OF UTAH
03/06/2024

Designed By:	BP
Drawn By:	TOS
Date:	03/06/2024
Checked By:	BA
Project No:	23-747FS

Drawing Title
DETAILS

Drawing number
SP600

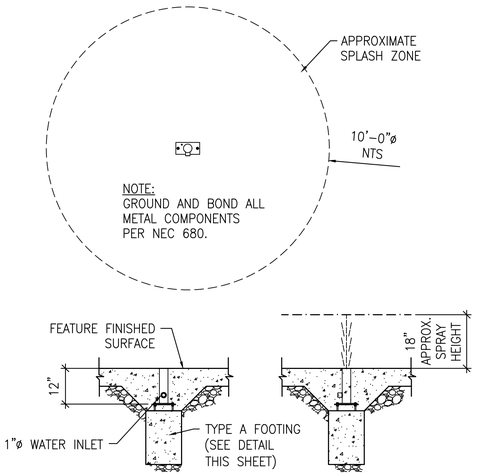

TULIP SPRAY DETAIL

SCALE: 1/2"=1'-0"

1 SP601

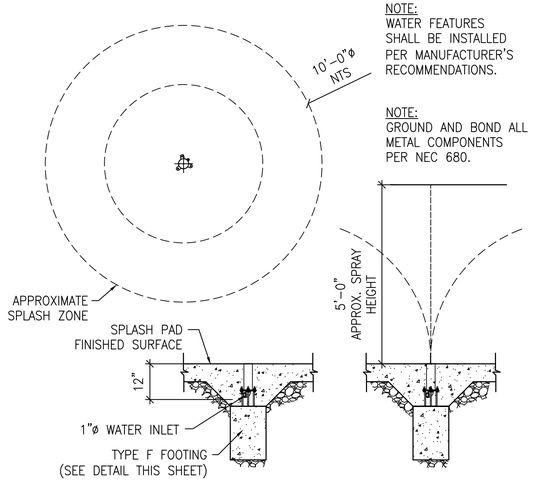

BUTTERCUP SPRAY DETAIL

SCALE: 1/2"=1'-0"

2 SP601

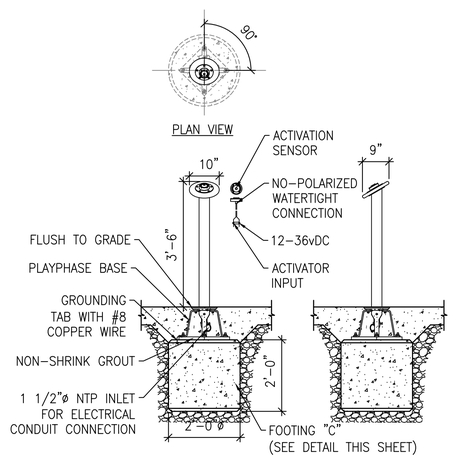

ACTIVATION BOLLARD DETAIL

SCALE: 1/2"=1'-0"

3 SP601

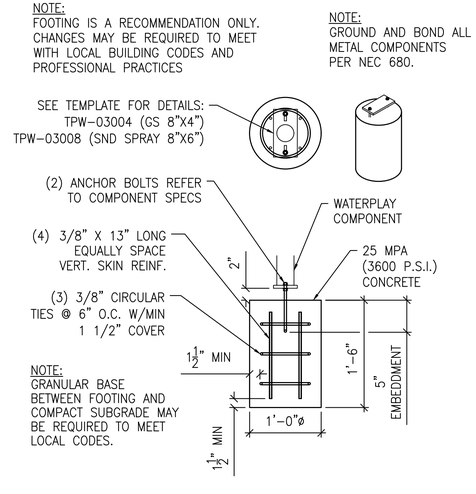

FOOTING "A" DETAIL

SCALE: 1"=1'-0"

4 SP601

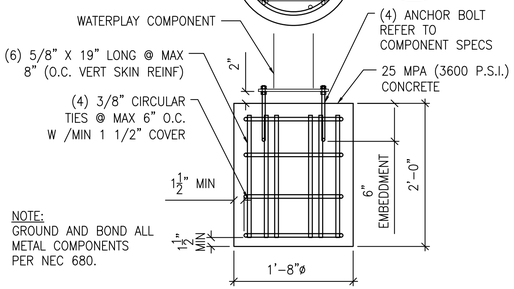

FOOTING "B" DETAIL

SCALE: 1"=1'-0"

5 SP601

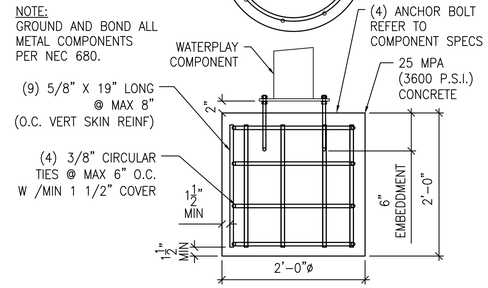

FOOTING "C" DETAIL

SCALE: 1"=1'-0"

6 SP601

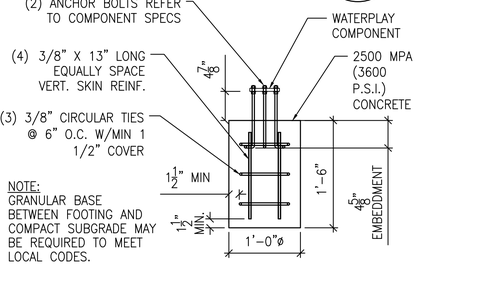

FOOTING "F" DETAIL

SCALE: 1"=1'-0"

7 SP601

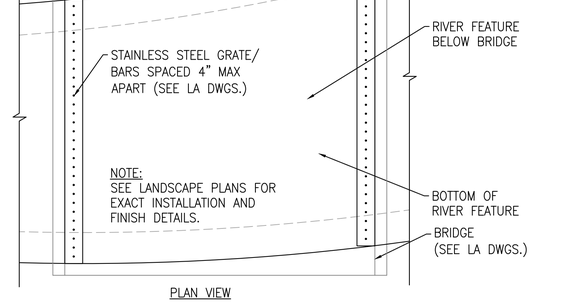

WATER FEATURE WALKING BRIDGE DETAIL

SCALE: 1/2"=1'-0"

8 SP601

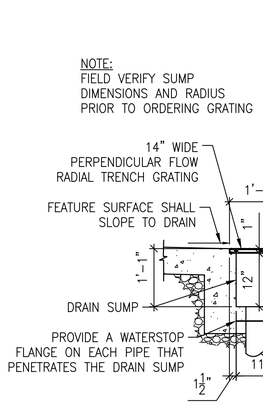

TERMINUS DRAIN DETAIL

SCALE: 3/4"=1'-0"

9 SP601

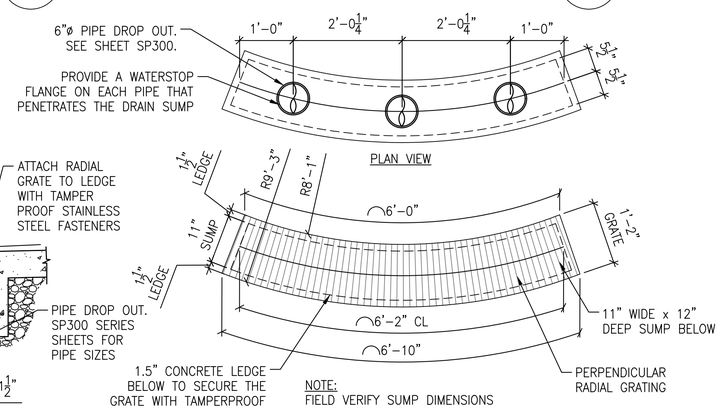

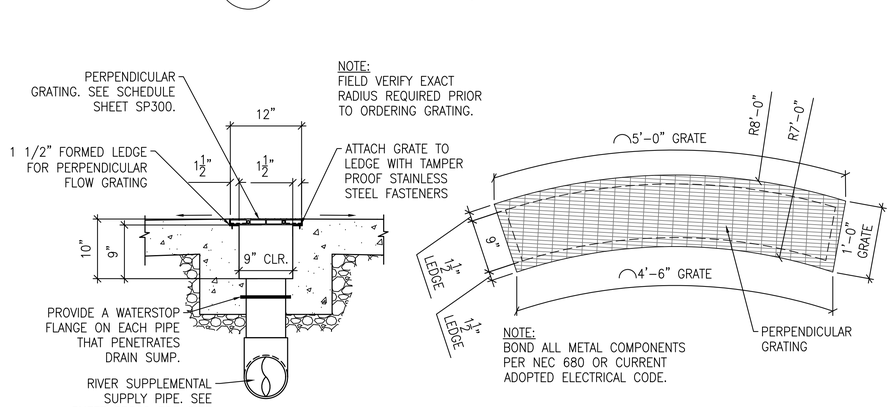

RIVER ORIGIN FITTING DETAIL

SCALE: 1/2"=1'-0"

10 SP601

blu line designs
planning | landscape architecture | design
8719 S. Sandy Parkway
Sandy, UT 84070
p 801.913.7994

CLIENT

FARMINGTON CITY
CONTACT: SYLVIA CLARK
PH: 801.939.9295
EMAIL:
SCLARK@FARMINGTON.UTAH.GOV

FARMINGTON

Water Design Inc
6740 South 1300 East
Salt Lake City, UT 84121
9012614009
www.waterdesigninc.com

The entire contents of the attached documents, including all sketches, plans, studies, drawings, schedules and specifications and all copyrights therein are, and shall remain the property of Water Design Incorporated. The documents and their contents may not be used, photocopied or reproduced digitally, electronically or in any other manner without the express prior written consent of Water Design Incorporated.

IVY ACRES PARK

1397 WEST COOK LANE
FARMINGTON, UT

REVISIONS

NO.	APPROVED	DESCRIPTION

LICENSED PROFESSIONAL ENGINEER
CHARLES ROSS ANDERSON
145589-2203
STATE OF UTAH
03/06/2024

Designed By:	BP
Drawn By:	TOS
Date:	03/06/2024
Checked By:	BA
Project No:	23-747FS

Drawing Title

DETAILS

Drawing number

SP601

BID SET

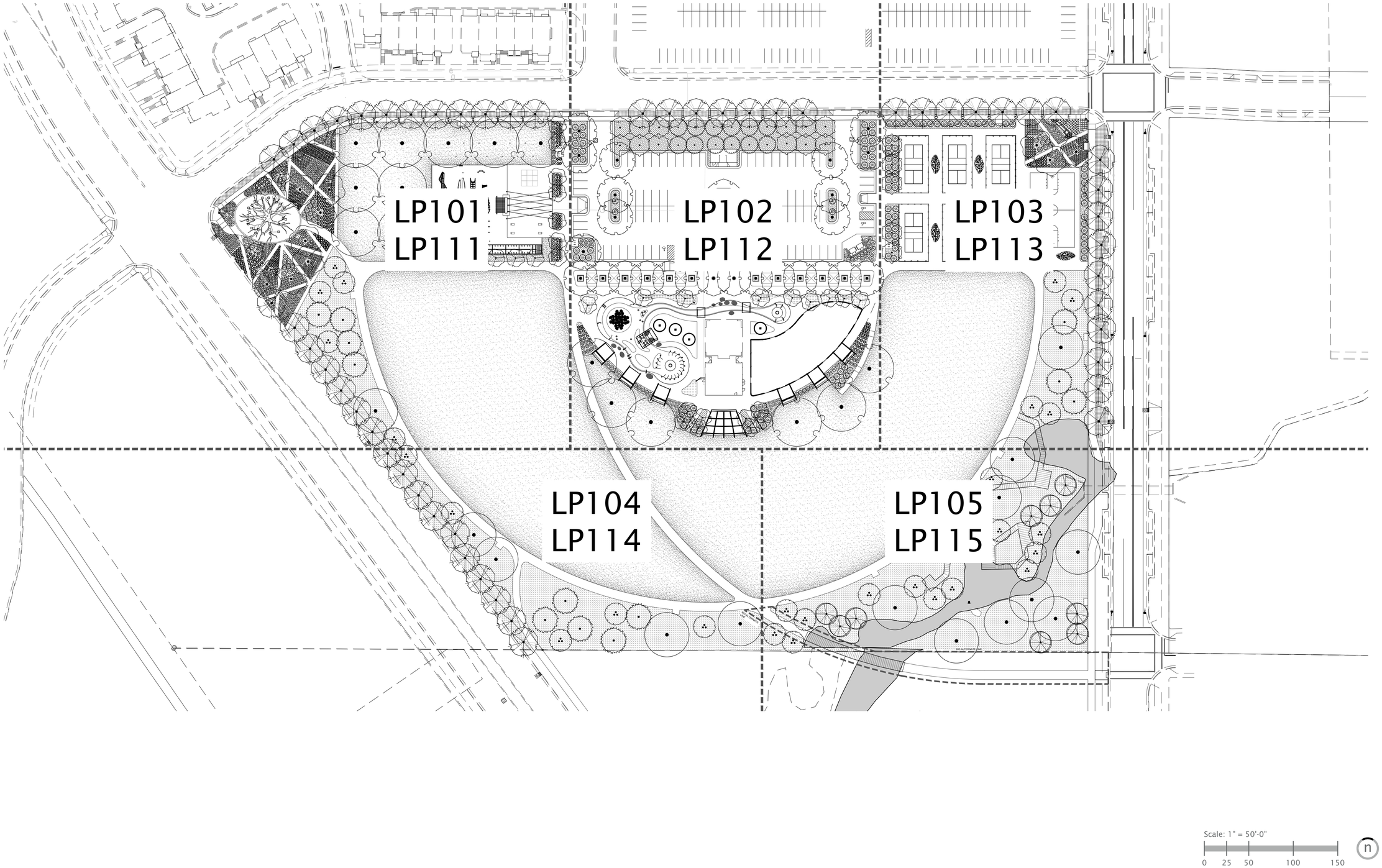

blu line designs
planning | landscape architecture | design
8719 S. Sandy Parkway
Sandy, UT 84070
p 801.913.7994

CLIENT

FARMINGTON CITY
CONTACT: SYLVIA CLARK
PH: 801.939.9295
EMAIL:
SCLARK@FARMINGTON.UTAH.GOV

FARMINGTON

IVY ACRES PARK

1397 WEST COOK LANE
FARMINGTON, UT

REVISIONS

NO.	yyhmmddy	DESCRIPTION

Stamp

STATE OF UTAH
CORY A. SHUPE
Licensed Landscape Architect
03/06/2024

Designed By:	BP
Drawn By:	BP, TH
Date:	03/06/2024
Checked By:	CS
Project No:	22-246

Drawing Title

OVERALL LANDSCAPE PLAN

Drawing number

LP100

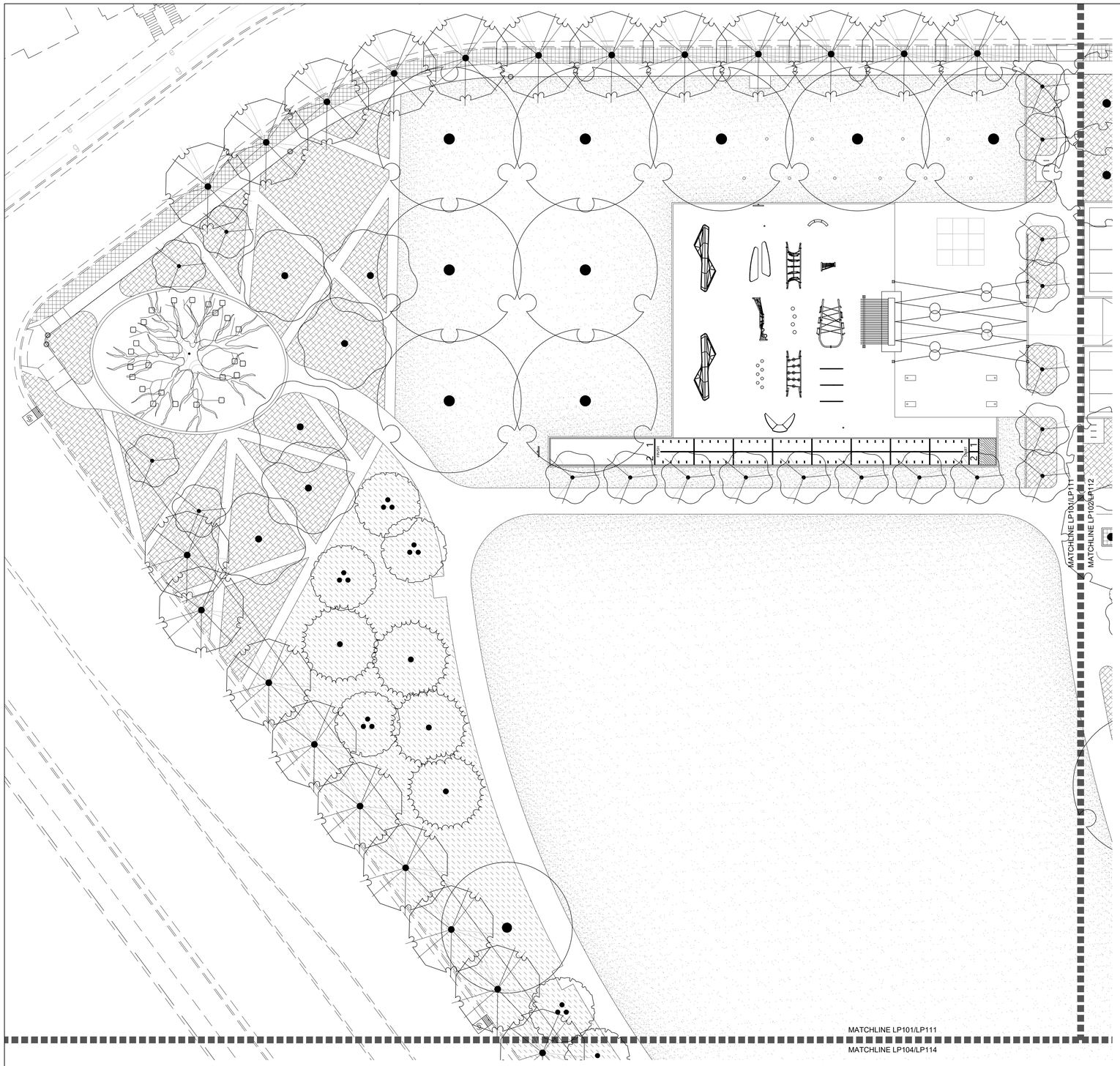

PLANT SCHEDULE

SYMBOL	BOTANICAL / COMMON NAME
DECIDUOUS TREES	
	GLEDITSIA TRIACANTHOS `SHADEMASTER` / SHADEMASTER HONEY LOCUST
	LIQUIDAMBAR STYRACIFLUA / SWEET GUM
	PLATANUS X ACERIFOLIA `EXCLAMATION` TM / EXCLAMATION LONDON PLANE TREE
	PRUNUS VIRGINIANA 'CANADA RED' MULTI-STEM / CANADA RED CHOKECHERRY
	QUERCUS BICOLOR / SWAMP WHITE OAK
	TAXODIUM DISTICHUM / BALD CYPRESS
	ZELKOVA SERRATA 'GREEN VASE' / ZELKOVA
EVERGREEN TREES	
	PICEA PUNGENS GLAUCA / COLORADO BLUE SPRUCE
ORNAMENTAL TREES	
	CERCIS CANADENSIS / EASTERN REDBUD
	MALUS 'PRAIRIFIRE' / PRAIRIEFIRE FLOWERING CRABAPPLE
	MALUS 'SPRING SNOW' / FLOWERING CRABAPPLE
	PRUNUS SERRULATA `KWANZAN` / FLOWERING CHERRY

GROUND COVERS

- BIOMEADOW BY BIOGRASS / BIOMEADOW
- PANICUM VIRGATUM 'CHEYENNE SKY' / CHEYENNE SKY SWITCH GRASS
- PLANTING BED / MULCH
- POA PRATENSIS / KENTUCKY BLUEGRASS
- ROCK MULCH - 3" DEPTH, 2"-4" WASHED SOUTHTOWN COBBLE

Scale: 1" = 20'-0"

0 10 20 40 60

blu line designs
planning | landscape architecture | desi
8719 S. Sandy Parkway
Sandy, UT 84070
p 801.913.7994

CLIENT

FARMINGTON CITY
CONTACT: SYLVIA CLARK
PH: 801.939.9295
EMAIL:
SCLARK@FARMINGTON.UTAH.GO

FARMINGTON

IVY ACRES PARK

1397 WEST COOK LANE
FARMINGTON, UT

REVISIONS

NO.	yy/mm/dd	DESCRIPTION

Stamp

STATE OF UTAH
CORY A. SHUPE
Licensed Landscape Architect
03/06/2024

Designed By:	BP
Drawn By:	BP, TH
Date:	03/06/2024
Checked By:	CS
Project No:	22-246

Drawing Title

TREE & GROUNDCOVER PLAN

Drawing number

LP101

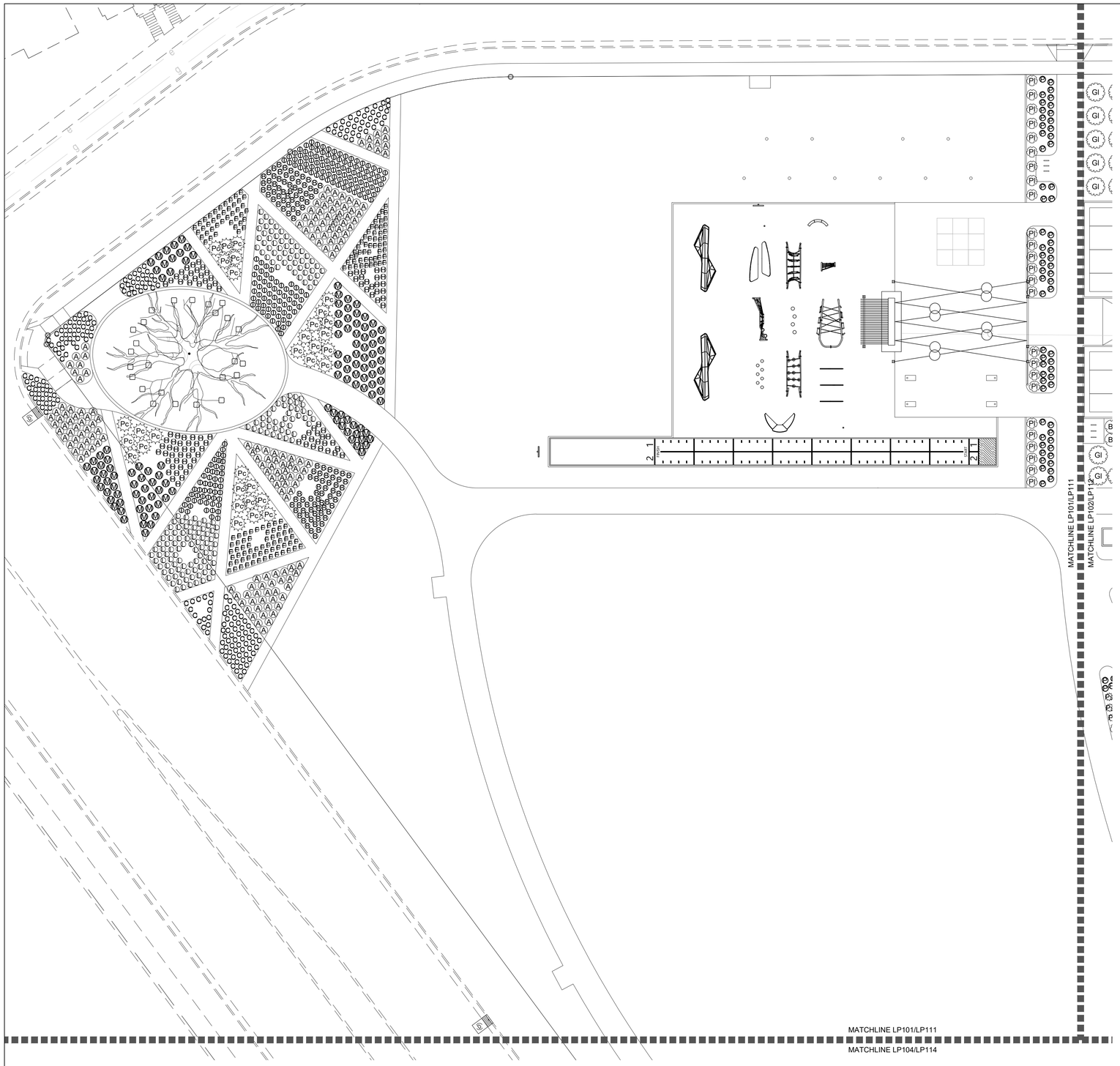

PLANT SCHEDULE

SYMBOL	BOTANICAL / COMMON NAME
SHRUBS	
Bl	BERBERIS THUNBERGII 'BAILELLA' / LAMBRUSCO™ JAPANESE BARBERRY
D	CARYOPTERIS X CLANDONENSIS 'DARK KNIGHT' / DARK KNIGHT BLUEBEARD
Jc	JUNIPERUS CHINENSIS 'MONTANA MOSS®' / CHINESE JUNIPER
Jw	JUNIPERUS SCOPULORUM 'WICHITA BLUE' / WICHITA BLUE JUNIPER
Pl	PHYSOCARPUS OPULIFOLIUS 'DONNA MAY' / LITTLE DEVIL NINEBARK
Pa	PINUS MUGO `SLOWMOUND` / MUGO PINE
Pc	PINUS SYLVESTRIS 'HILLSIDE CREEPER' / HILLSIDE CREEPER SCOTCH PINE
Gl	RHUS AROMATICA `GRO-LOW` / GRO-LOW FRAGRANT SUMAC
ORNAMENTAL GRASSES	
I	CAREX MORROWII 'ICE DANCE' / ICE DANCE JAPANESE SEDGE
M	MUHLENBERGIA CAPILLARIS / PINK MUHLY GRASS
P	PENNISETUM ALOPECUROIDES `HAMELN` / HAMELN DWARF FOUNTAIN GRASS
PERENNIALS	
A	AMSONIA HUBRICHTII / ARKANSAS BLUESTAR
B	BERLANDIERA LYRATA / CHOCOLATE DAISY
C	COREOPSIS UPTICK™ GOLD & BRONZE PP28882 / TICKSEED
H	HELIANTHEMUM NUMMULARIUM 'WISLEY PINK' / WISLEY PINK SUNROSE
L	LAVANDULA ANGUSTIFOLIA 'MUNSTEAD' / MUNSTEAD ENGLISH LAVENDER
P	PHLOX PANICULATA 'BARPHFLARE' / FLAME™ RED GARDEN PHLOX

Scale: 1" = 20'-0"

0 10 20 40 60

blu line designs
planning | landscape architecture | desi
8719 S. Sandy Parkway
Sandy, UT 84070
p 801.913.7994

CLIENT

FARMINGTON CITY
CONTACT: SYLVIA CLARK
PH: 801.939.9295
EMAIL:
SCLARK@FARMINGTON.UTAH.GO

FARMINGTON

IVY ACRES PARK

1397 WEST COOK LANE
FARMINGTON, UT

REVISIONS

NO.	symmetries	DESCRIPTION

Stamp

STATE OF UTAH
CORY A. SHUPE
Licensed Landscape Architect
03/06/2024

Designed By:	BP
Drawn By:	BP, TH
Date:	03/06/2024
Checked By:	CS
Project No:	22-246

Drawing Title

SHRUB PLAN

Drawing number

LP111

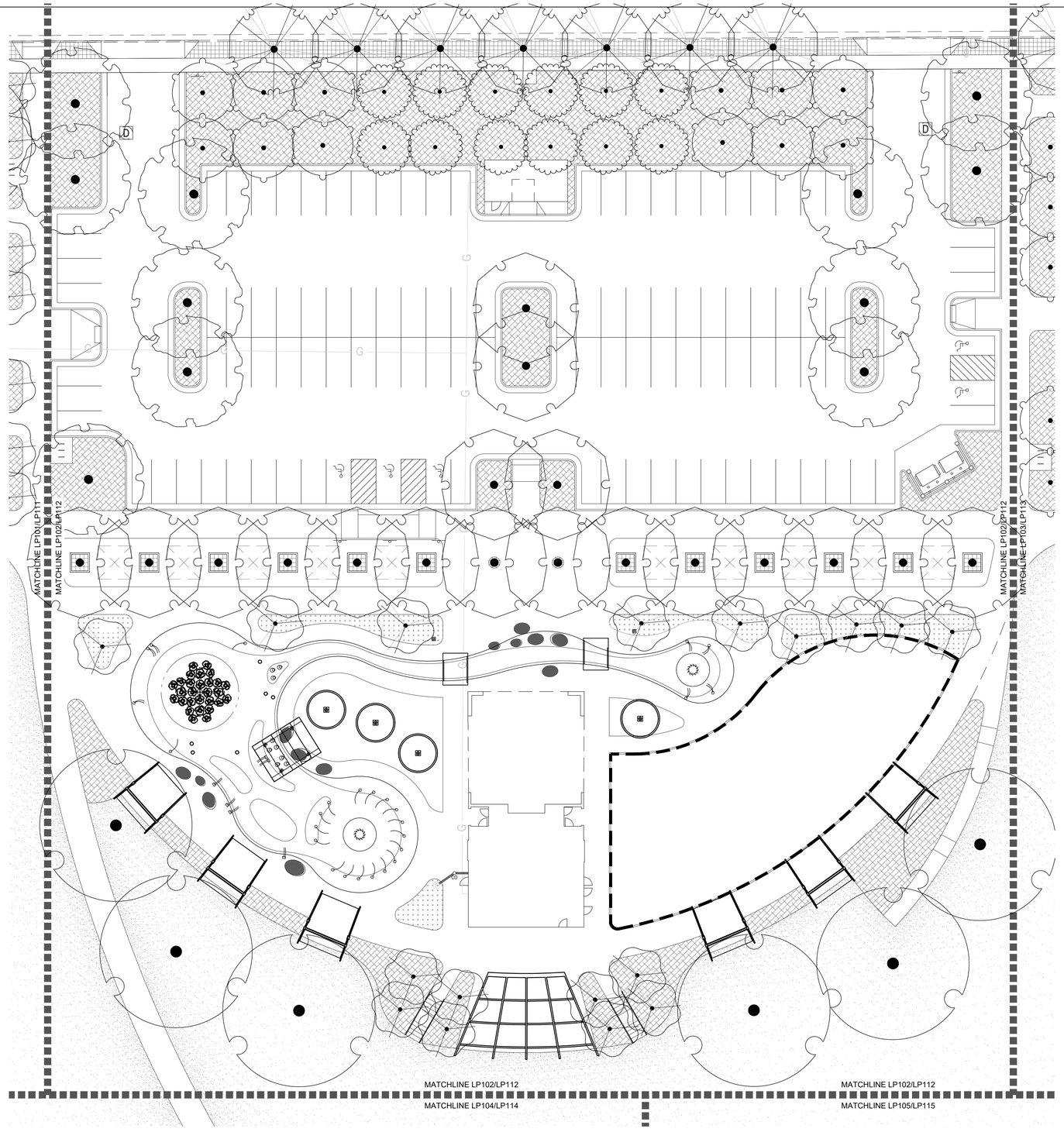

PLANT SCHEDULE

SYMBOL	BOTANICAL / COMMON NAME
DECIDUOUS TREES	
	GLEDITSIA TRIACANTHOS `SHADEMASTER` / SHADEMASTER HONEY LOCUST
	LIQUIDAMBAR STYRACIFLUA / SWEET GUM
	PLATANUS X ACERIFOLIA `EXCLAMATION` TM / EXCLAMATION LONDON PLANE TREE
	PRUNUS VIRGINIANA 'CANADA RED' MULTI-STEM / CANADA RED CHOKECHERRY
	QUERCUS BICOLOR / SWAMP WHITE OAK
	TAXODIUM DISTICHUM / BALD CYPRESS
	ZELKOVA SERRATA 'GREEN VASE' / ZELKOVA
EVERGREEN TREES	
	PICEA PUNGENS GLAUCA / COLORADO BLUE SPRUCE
ORNAMENTAL TREES	
	CERCIS CANADENSIS / EASTERN REDBUD
	MALUS 'PRAIRIFIRE' / PRAIRIEFIRE FLOWERING CRABAPPLE
	MALUS 'SPRING SNOW' / FLOWERING CRABAPPLE
	PRUNUS SERRULATA `KWANZAN` / FLOWERING CHERRY

GROUND COVERS

- BIOMEADOW BY BIOGRASS / BIOMEADOW
- PANICUM VIRGATUM 'CHEYENNE SKY' / CHEYENNE SKY SWITCH GRASS
- PLANTING BED / MULCH
- POA PRATENSIS / KENTUCKY BLUEGRASS
- ROCK MULCH - 3" DEPTH, 2"-4" WASHED SOUTHTOWN COBBLE

Scale: 1" = 20'-0"

0 10 20 40 60

blu line designs
planning | landscape architecture | desi
8719 S. Sandy Parkway
Sandy, UT 84070
p 801.913.7994

CLIENT

FARMINGTON CITY
CONTACT: SYLVIA CLARK
PH: 801.939.9295
EMAIL:
SCLARK@FARMINGTON.UTAH.GO

IVY ACRES PARK

1397 WEST COOK LANE
FARMINGTON, UT

REVISIONS

NO.	symmbol	DESCRIPTION

Stamp

STATE OF UTAH
CORY A. SHUPE
Licensed Landscape Architect

03/06/2024

Designed By:	BP
Drawn By:	BP, TH
Date:	03/06/2024
Checked By:	CS
Project No:	22-246

Drawing Title

TREE & GROUNDCOVER PLAN

Drawing number

LP102

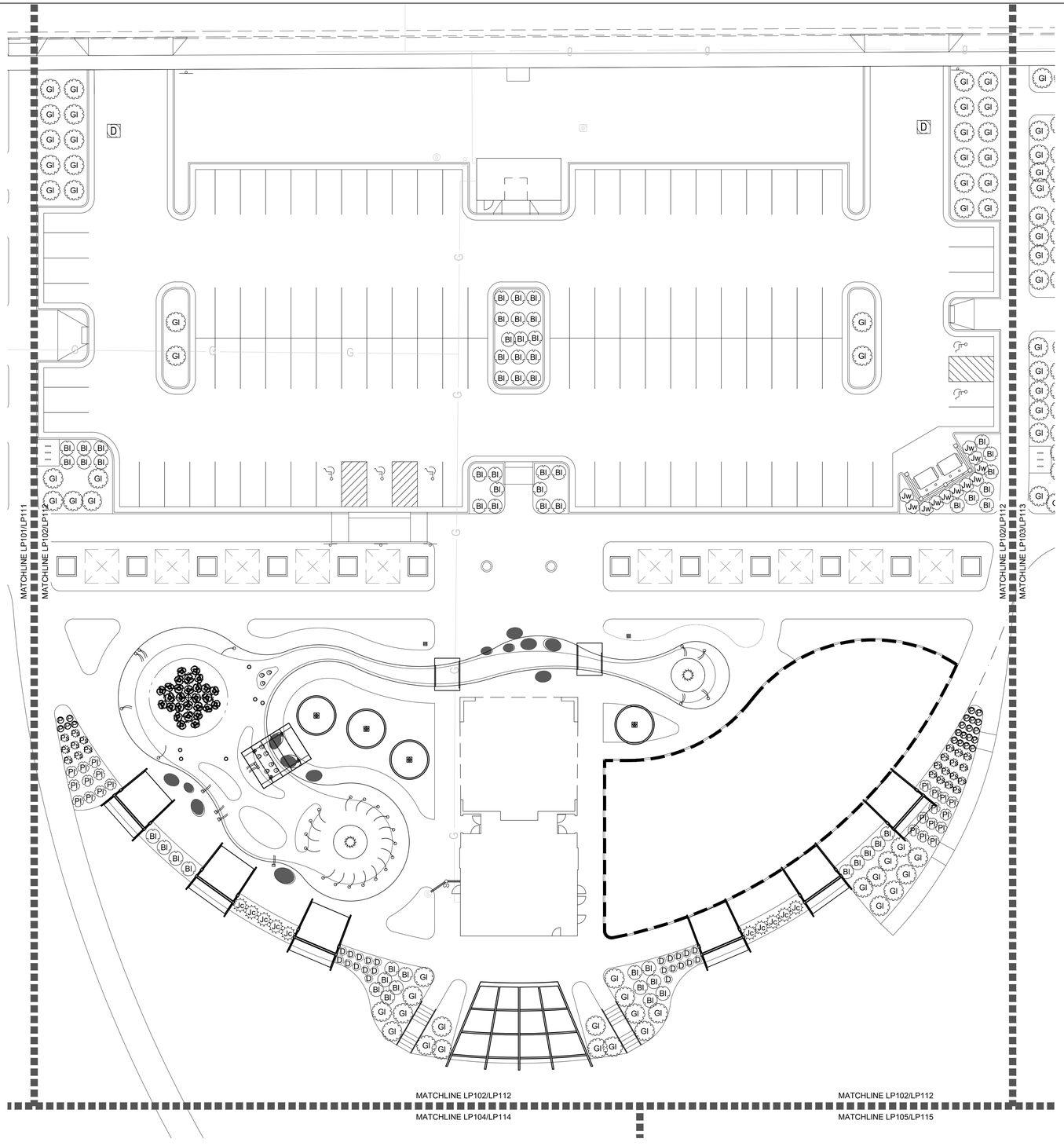

PLANT SCHEDULE

SYMBOL	BOTANICAL / COMMON NAME
SHRUBS	
Bl	BERBERIS THUNBERGII 'BAILELLA' / LAMBRUSCO™ JAPANESE BARBERRY
D	CARYOPTERIS X CLANDONENSIS 'DARK KNIGHT' / DARK KNIGHT BLUEBEARD
Jc	JUNIPERUS CHINENSIS 'MONTANA MOSS®' / CHINESE JUNIPER
Jw	JUNIPERUS SCOPULORUM 'WICHITA BLUE' / WICHITA BLUE JUNIPER
Pl	PHYSOCARPUS OPULIFOLIUS 'DONNA MAY' / LITTLE DEVIL NINEBARK
Ps	PINUS MUGO `SLOWMOUND` / MUGO PINE
Pc	PINUS SYLVESTRIS 'HILLSIDE CREEPER' / HILLSIDE CREEPER SCOTCH PINE
Gl	RHUS AROMATICA `GRO-LOW` / GRO-LOW FRAGRANT SUMAC
ORNAMENTAL GRASSES	
Φ	CAREX MORROWII 'ICE DANCE' / ICE DANCE JAPANESE SEDGE
M	MUHLENBERGIA CAPILLARIS / PINK MUHLY GRASS
P	PENNISETUM ALOPECUROIDES `HAMELN` / HAMELN DWARF FOUNTAIN GRASS
PERENNIALS	
A	AMSONIA HUBRICHTII / ARKANSAS BLUESTAR
B	BERLANDIERA LYRATA / CHOCOLATE DAISY
o	COREOPSIS UPTICK™ GOLD & BRONZE PP28882 / TICKSEED
H	HELIANTHEMUM NUMMULARIUM 'WISLEY PINK' / WISLEY PINK SUNROSE
L	LAVANDULA ANGUSTIFOLIA 'MUNSTEAD' / MUNSTEAD ENGLISH LAVENDER
P	PHLOX PANICULATA 'BARPHFLARE' / FLAME™ RED GARDEN PHLOX

Scale: 1" = 20'-0"

0 10 20 40 60

n

blu line designs
planning | landscape architecture | design
8719 S. Sandy Parkway
Sandy, UT 84070
p 801.913.7994

CLIENT

FARMINGTON CITY
CONTACT: SYLVIA CLARK
PH: 801.939.9295
EMAIL:
SCLARK@FARMINGTON.UTAH.GO

FARMINGTON

IVY ACRES PARK

1397 WEST COOK LANE
FARMINGTON, UT

REVISIONS

NO.	DATE	DESCRIPTION

Stamp

STATE OF UTAH
CORY A. SHUPE
License Landscape Architect
03/06/2024

Designed By:	BP
Drawn By:	BP, TH
Date:	03/06/2024
Checked By:	CS
Project No:	22-246

Drawing Title

SHRUB PLAN

Drawing number

LP112

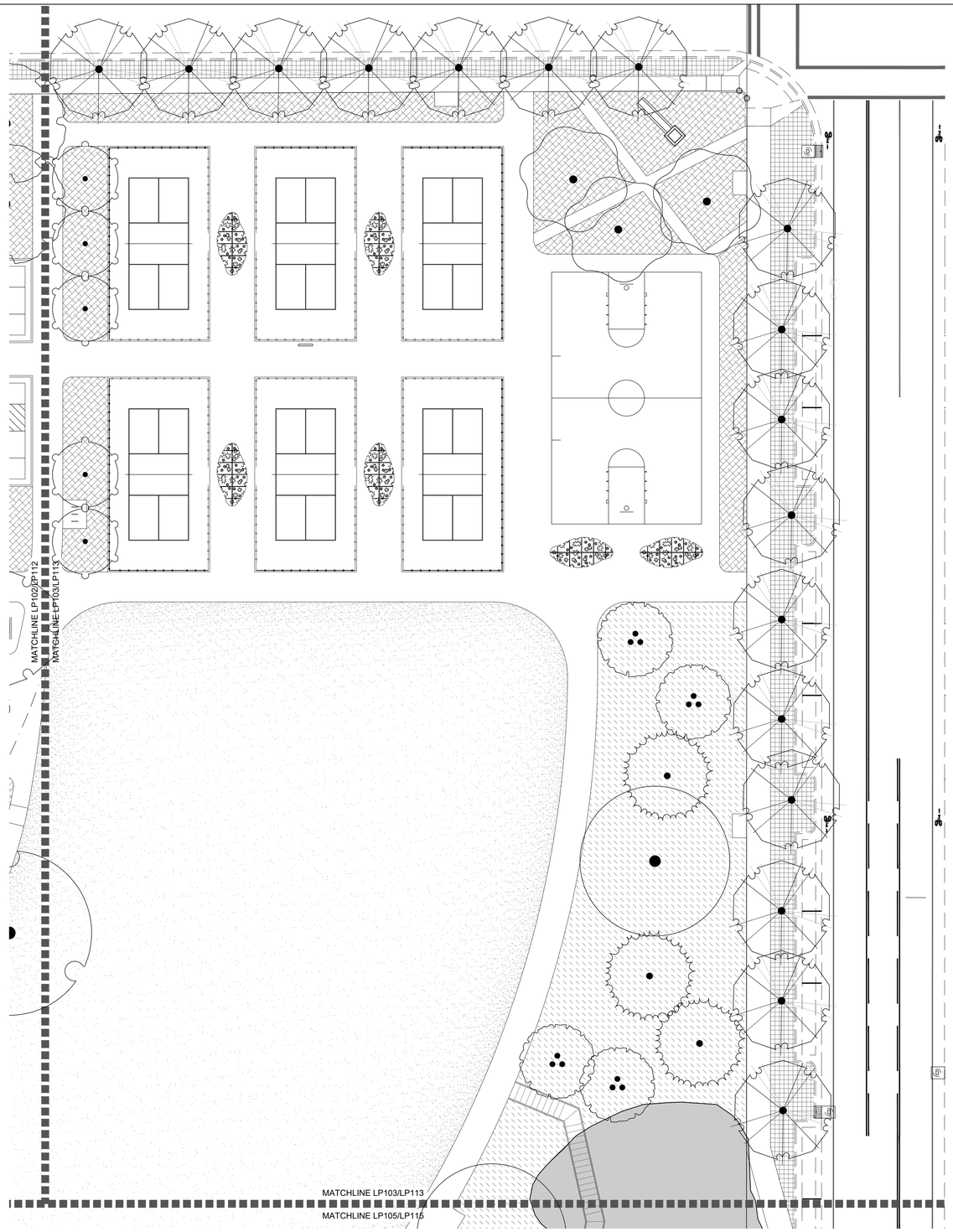

PLANT SCHEDULE

SYMBOL	BOTANICAL / COMMON NAME
DECIDUOUS TREES	
	GLEDITSIA TRIACANTHOS `SHADEMASTER` / SHADEMASTER HONEY LOCUST
	LIQUIDAMBAR STYRACIFLUA / SWEET GUM
	PLATANUS X ACERIFOLIA `EXCLAMATION` TM / EXCLAMATION LONDON PLANE TREE
	PRUNUS VIRGINIANA 'CANADA RED' MULTI-STEM / CANADA RED CHOKECHERRY
	QUERCUS BICOLOR / SWAMP WHITE OAK
	TAXODIUM DISTICHUM / BALD CYPRESS
	ZELKOVA SERRATA 'GREEN VASE' / ZELKOVA
EVERGREEN TREES	
	PICEA PUNGENS GLAUCA / COLORADO BLUE SPRUCE
ORNAMENTAL TREES	
	CERCIS CANADENSIS / EASTERN REDBUD
	MALUS 'PRAIRIFIRE' / PRAIRIEFIRE FLOWERING CRABAPPLE
	MALUS 'SPRING SNOW' / FLOWERING CRABAPPLE
	PRUNUS SERRULATA `KWANZAN` / FLOWERING CHERRY

GROUND COVERS

- BIOMEADOW BY BIOGRASS / BIOMEADOW
- PANICUM VIRGATUM 'CHEYENNE SKY" / CHEYENNE SKY SWITCH GRASS
- PLANTING BED / MULCH
- POA PRATENSIS / KENTUCKY BLUEGRASS
- ROCK MULCH - 3" DEPTH, 2"-4" WASHED SOUTHTOWN COBBLE

Scale: 1" = 20'-0"

0 10 20 40 60

blu line designs
planning | landscape architecture | desi
8719 S. Sandy Parkway
Sandy, UT 84070
p 801.913.7994

CLIENT

FARMINGTON CITY
CONTACT: SYLVIA CLARK
PH: 801.939.9295
EMAIL:
SCLARK@FARMINGTON.UTAH.GO

IVY ACRES PARK

1397 WEST COOK LANE
FARMINGTON, UT

REVISIONS

NO.	symmdav	DESCRIPTION

Stamp

STATE OF UTAH
CORY A. SHUPE
Licensed Landscape Architect
03/06/2024

Designed By:	BP
Drawn By:	BP, TH
Date:	03/06/2024
Checked By:	CS
Project No:	22-246

Drawing Title

TREE & GROUNDCOVER PLAN

Drawing number

LP103

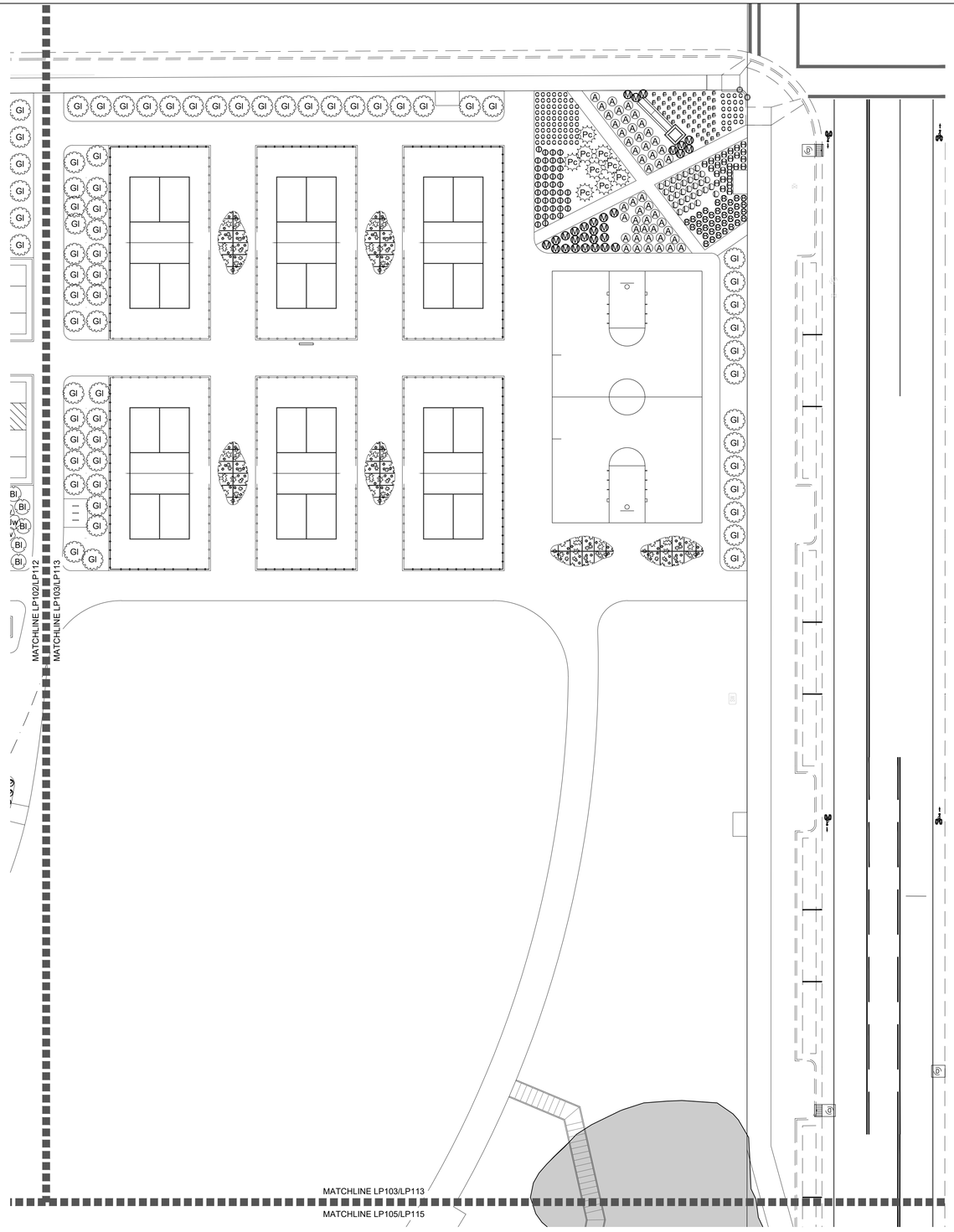

PLANT SCHEDULE

SYMBOL	BOTANICAL / COMMON NAME
SHRUBS	
Bl	BERBERIS THUNBERGII 'BAILELLA' / LAMBRUSCO™ JAPANESE BARBERRY
D	CARYOPTERIS X CLANDONENSIS 'DARK KNIGHT' / DARK KNIGHT BLUEBEARD
Jc	JUNIPERUS CHINENSIS 'MONTANA MOSS®' / CHINESE JUNIPER
Jw	JUNIPERUS SCOPULORUM 'WICHITA BLUE' / WICHITA BLUE JUNIPER
Pl	PHYSOCARPUS OPULIFOLIUS 'DONNA MAY' / LITTLE DEVIL NINEBARK
Pm	PINUS MUGO `SLOWMOUND` / MUGO PINE
Pc	PINUS SYLVESTRIS 'HILLSIDE CREEPER' / HILLSIDE CREEPER SCOTCH PINE
Gl	RHUS AROMATICA `GRO-LOW` / GRO-LOW FRAGRANT SUMAC
ORNAMENTAL GRASSES	
Φ	CAREX MORROWII 'ICE DANCE' / ICE DANCE JAPANESE SEDGE
M	MUHLENBERGIA CAPILLARIS / PINK MUHLY GRASS
P	PENNISETUM ALOPECUROIDES `HAMELN` / HAMELN DWARF FOUNTAIN GRASS
PERENNIALS	
A	AMSONIA HUBRICHTII / ARKANSAS BLUESTAR
B	BERLANDIERA LYRATA / CHOCOLATE DAISY
C	COREOPSIS UPTICK™ GOLD & BRONZE PP28882 / TICKSEED
H	HELIANTHEMUM NUMMULARIUM 'WISLEY PINK' / WISLEY PINK SUNROSE
L	LAVANDULA ANGUSTIFOLIA 'MUNSTEAD' / MUNSTEAD ENGLISH LAVENDER
P	PHLOX PANICULATA 'BARPHFLARE' / FLAME™ RED GARDEN PHLOX

Scale: 1" = 20'-0"

0 10 20 40 60

n

blu line designs
planning | landscape architecture | desi

8719 S. Sandy Parkway
Sandy, UT 84070
p 801.913.7994

CLIENT

FARMINGTON CITY
CONTACT: SYLVIA CLARK
PH: 801.939.9295
EMAIL:
SCLARK@FARMINGTON.UTAH.GO

IVY ACRES PARK

1397 WEST COOK LANE
FARMINGTON, UT

REVISIONS

NO.	symmdav	DESCRIPTION

Stamp

STATE OF UTAH
CORY A. SHUPE
Licensed Landscape Architect

03/06/2024

Designed By:	BP
Drawn By:	BP, TH
Date:	03/06/2024
Checked By:	CS
Project No:	22-246

Drawing Title

SHRUB PLAN

Drawing number

LP113

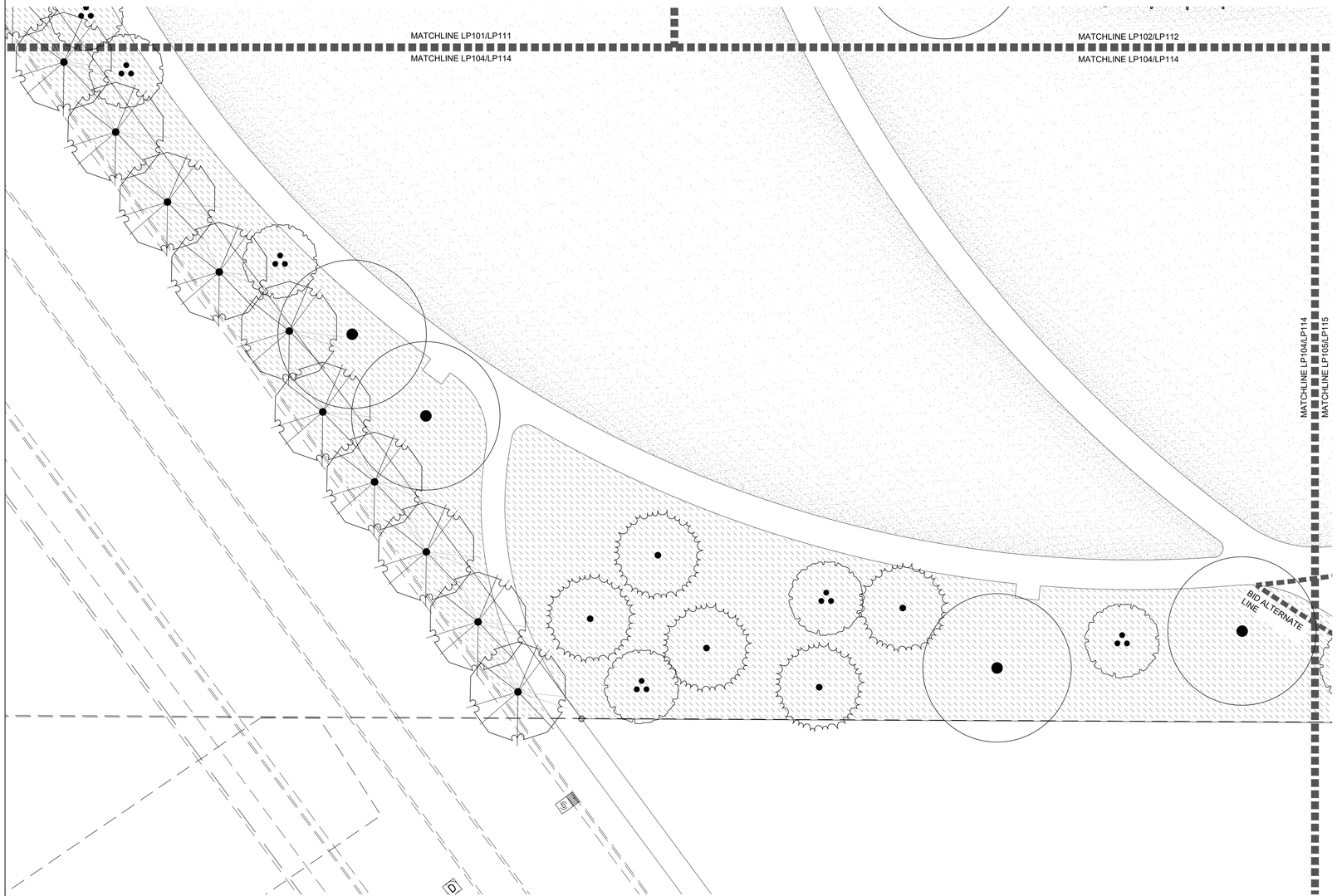

PRUNUS SERRULATA `KWANZAN` / FLOWERING CHERRY

SYMBOL	BOTANICAL / COMMON NAME
GROUND COVERS	
	BIOMEADOW BY BIOGRASS / BIOMEADOW
	PANICUM VIRGATUM 'CHEYENNE SKY' / CHEYENNE SKY SWITCH GRASS
	PLANTING BED / MULCH
	POA PRATENSIS / KENTUCKY BLUEGRASS
	ROCK MULCH - 3" DEPTH, 2"-4" WASHED SOUTHTOWN COBBLE

PLANT SCHEDULE

SYMBOL	BOTANICAL / COMMON NAME
DECIDUOUS TREES	
	GLEDITSIA TRIACANTHOS `SHADEMASTER` / SHADEMASTER HONEY LOCUST
	LIQUIDAMBAR STYRACIFLUA / SWEET GUM
	PLATANUS X ACERIFOLIA `EXCLAMATION` TM / EXCLAMATION LONDON PLANE TREE
	PRUNUS VIRGINIANA 'CANADA RED' MULTI-STEM / CANADA RED CHOKECHERRY
	QUERCUS BICOLOR / SWAMP WHITE OAK
	TAXODIUM DISTICHUM / BALD CYPRESS
	ZELKOVA SERRATA 'GREEN VASE' / ZELKOVA
EVERGREEN TREES	
	PICEA PUNGENS GLAUCA / COLORADO BLUE SPRUCE
ORNAMENTAL TREES	
	CERCIS CANADENSIS / EASTERN REDBUD
	MALUS 'PRAIRIFIRE' / PRAIRIEFIRE FLOWERING CRABAPPLE
	MALUS 'SPRING SNOW' / FLOWERING CRABAPPLE

Scale: 1" = 20'-0"

0 10 20 40 60

blu line designs
planning | landscape architecture | desi

8719 S. Sandy Parkway
Sandy, UT 84070
p 801.913.7994

CLIENT

FARMINGTON CITY
CONTACT: SYLVIA CLARK
PH: 801.939.9295
EMAIL:
SCLARK@FARMINGTON.UTAH.GO

FARMINGTON

IVY ACRES PARK

1397 WEST COOK LANE
FARMINGTON, UT

REVISIONS

NO.	yy/mm/dd	DESCRIPTION

Stamp

STATE OF UTAH
CORY A. SHUPE
LICENSED LANDSCAPE ARCHITECT
03/06/2024

Designed By:	BP
Drawn By:	BP, TH
Date:	03/06/2024
Checked By:	CS
Project No:	22-246

Drawing Title

TREE & GROUNDCOVER PLAN

Drawing number

LP104

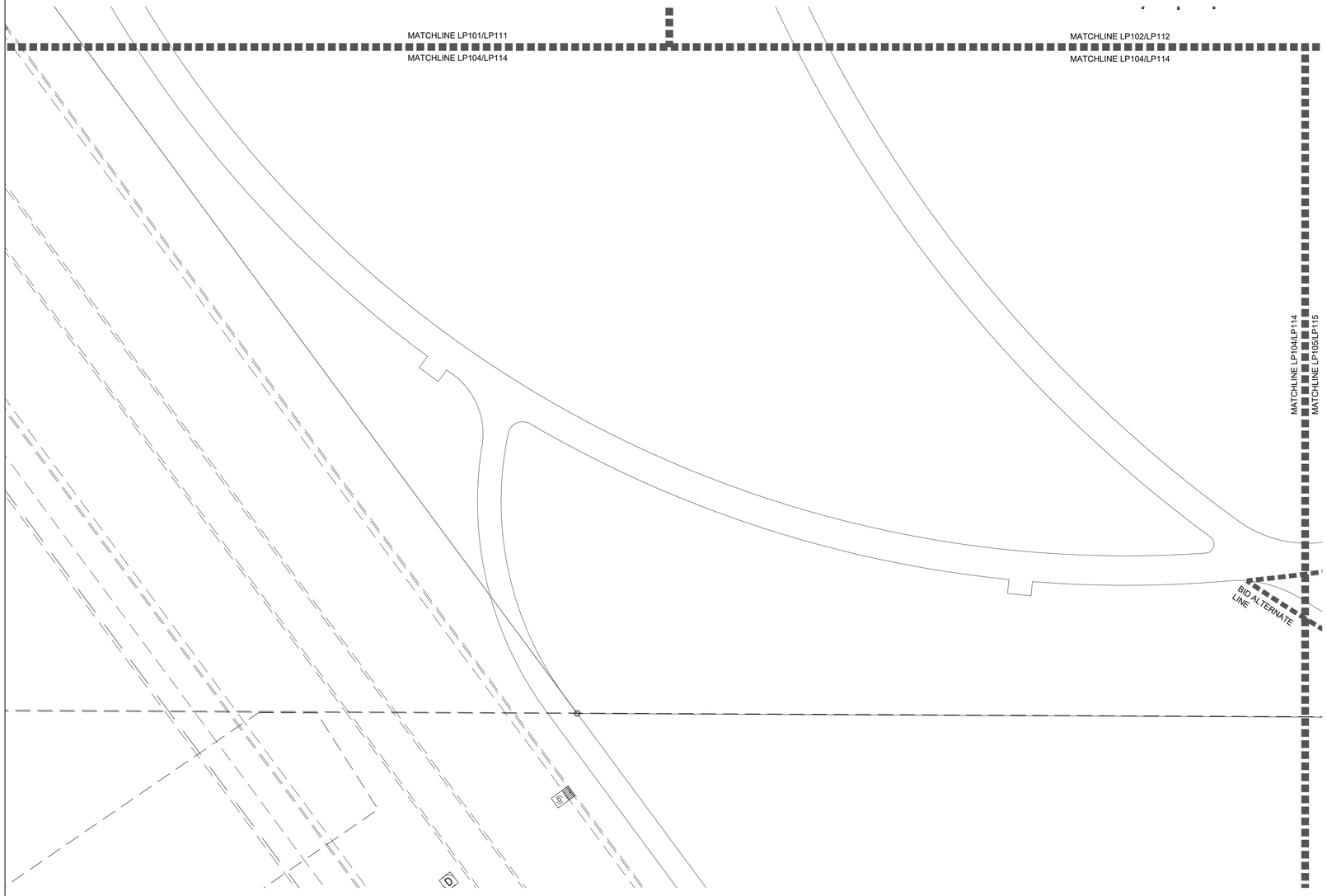

PLANT SCHEDULE

SYMBOL	BOTANICAL / COMMON NAME
SHRUBS	
BI	BERBERIS THUNBERGII 'BAILELLA' / LAMBRUSCO™ JAPANESE BARBERRY
D	CARYOPTERIS X CLANDONENSIS 'DARK KNIGHT' / DARK KNIGHT BLUEBEARD
Jc	JUNIPERUS CHINENSIS 'MONTANA MOSS®' / CHINESE JUNIPER
Jw	JUNIPERUS SCOPULORUM 'WICHITA BLUE' / WICHITA BLUE JUNIPER
Pi	PHYSOCARPUS OPULIFOLIUS 'DONNA MAY' / LITTLE DEVIL NINEBARK
Ps	PINUS MUGO `SLOWMOUND` / MUGO PINE
Pc	PINUS SYLVESTRIS 'HILLSIDE CREEPER' / HILLSIDE CREEPER SCOTCH PINE
Gl	RHUS AROMATICA `GRO-LOW` / GRO-LOW FRAGRANT SUMAC
ORNAMENTAL GRASSES	
Ø	CAREX MORROWII 'ICE DANCE' / ICE DANCE JAPANESE SEDGE
M	MUHLENBERGIA CAPILLARIS / PINK MUHLY GRASS
P	PENNISETUM ALOPECUROIDES `HAMELN` / HAMELN DWARF FOUNTAIN GRASS
PERENNIALS	
A	AMSONIA HUBRICHTII / ARKANSAS BLUESTAR
B	BERLANDIERA LYRATA / CHOCOLATE DAISY
c	COREOPSIS UPTICK™ GOLD & BRONZE PP28882 / TICKSEED
H	HELIANTHEMUM NUMMULARIUM 'WISLEY PINK' / WISLEY PINK SUNROSE
L	LAVANDULA ANGUSTIFOLIA 'MUNSTEAD' / MUNSTEAD ENGLISH LAVENDER
p	PHLOX PANICULATA 'BARPHFLARE' / FLAME™ RED GARDEN PHLOX

Scale: 1" = 20'-0"

0 10 20 40 60

n

blu line designs
planning | landscape architecture | desi

8719 S. Sandy Parkway
Sandy, UT 84070
p 801.913.7994

CLIENT

FARMINGTON CITY
CONTACT: SYLVIA CLARK
PH: 801.939.9295
EMAIL:
SCLARK@FARMINGTON.UTAH.GO

FARMINGTON

IVY ACRES PARK

1397 WEST COOK LANE
FARMINGTON, UT

REVISIONS

NO.	symmdas	DESCRIPTION

Stamp

STATE OF UTAH
CORY A. SHUPE
Licensed Landscape Architect

03/06/2024

Designed By:	BP
Drawn By:	BP, TH
Date:	03/06/2024
Checked By:	CS
Project No:	22-246

Drawing Title

SHRUB PLAN

Drawing number

LP114



PRUNUS SERRULATA `KWANZAN` / FLOWERING CHERRY

SYMBOL | BOTANICAL / COMMON NAME

GROUND COVERS

- BIOMEADOW BY BIOGRASS / BIOMEADOW
- PANICUM VIRGATUM 'CHEYENNE SKY' / CHEYENNE SKY SWITCH GRASS
- PLANTING BED / MULCH
- POA PRATENSIS / KENTUCKY BLUEGRASS
- ROCK MULCH - 3" DEPTH, 2"-4" WASHED SOUTHTOWN COBBLE

PLANT SCHEDULE

SYMBOL | BOTANICAL / COMMON NAME

DECIDUOUS TREES

- GLEDITSIA TRIACANTHOS `SHADEMASTER` / SHADEMASTER HONEY LOCUST
- LIQUIDAMBAR STYRACIFLUA / SWEET GUM
- PLATANUS X ACERIFOLIA `EXCLAMATION` TM / EXCLAMATION LONDON PLANE TREE
- PRUNUS VIRGINIANA 'CANADA RED' MULTI-STEM / CANADA RED CHOKECHERRY
- QUERCUS BICOLOR / SWAMP WHITE OAK
- TAXODIUM DISTICHUM / BALD CYPRESS
- ZELKOVA SERRATA 'GREEN VASE' / ZELKOVA

EVERGREEN TREES

- PICEA PUNGENS GLAUCA / COLORADO BLUE SPRUCE

ORNAMENTAL TREES

- CERCIS CANADENSIS / EASTERN REDBUD
- MALUS 'PRAIRIFIRE' / PRAIRIEFIRE FLOWERING CRABAPPLE
- MALUS 'SPRING SNOW' / FLOWERING CRABAPPLE

Scale: 1" = 20'-0"

0 10 20 40 60

blu line designs
planning | landscape architecture | desi
8719 S. Sandy Parkway
Sandy, UT 84070
p 801.913.7994

CLIENT

FARMINGTON CITY
CONTACT: SYLVIA CLARK
PH: 801.939.9295
EMAIL:
SCLARK@FARMINGTON.UTAH.GO

FARMINGTON

IVY ACRES PARK

1397 WEST COOK LANE
FARMINGTON, UT

REVISIONS

NO.	symmdap	DESCRIPTION

Stamp

STATE OF UTAH
CORY A. SHUPE
Licensed Landscape Architect

03/06/2024

Designed By:	BP
Drawn By:	BP, TH
Date:	03/06/2024
Checked By:	CS
Project No:	22-246

Drawing Title

TREE & GROUNDCOVER PLAN

Drawing number

LP105

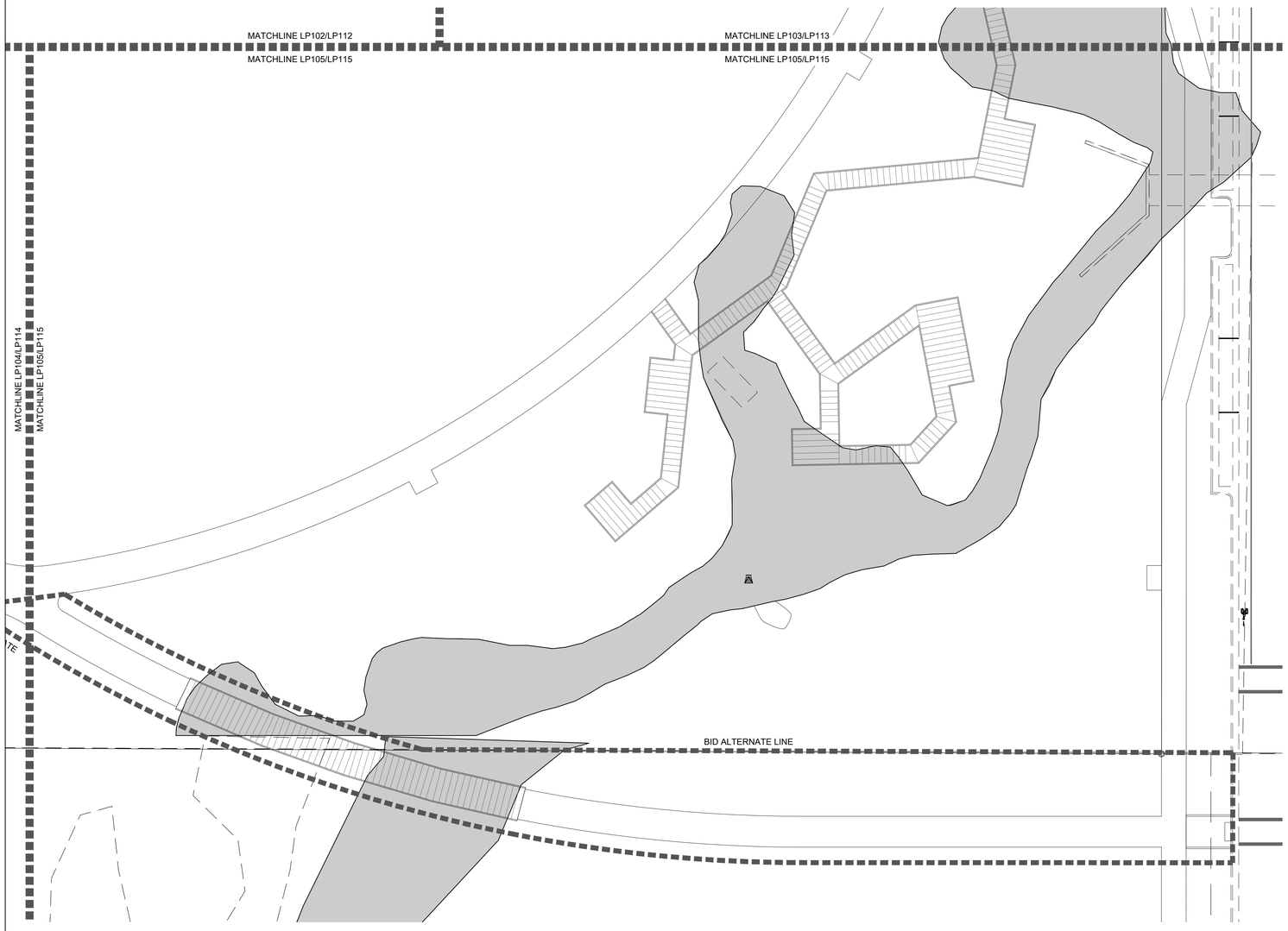

PLANT SCHEDULE

SYMBOL	BOTANICAL / COMMON NAME
SHRUBS	
Bl	BERBERIS THUNBERGII 'BAILELLA' / LAMBRUSCO™ JAPANESE BARBERRY
D	CARYOPTERIS X CLANDONENSIS 'DARK KNIGHT' / DARK KNIGHT BLUEBEARD
Jc	JUNIPERUS CHINENSIS 'MONTANA MOSS®' / CHINESE JUNIPER
Jw	JUNIPERUS SCOPULORUM 'WICHITA BLUE' / WICHITA BLUE JUNIPER
Pl	PHYSOCARPUS OPULIFOLIUS 'DONNA MAY' / LITTLE DEVIL NINEBARK
Pm	PINUS MUGO `SLOWMOUND` / MUGO PINE
Pc	PINUS SYLVESTRIS 'HILLSIDE CREEPER' / HILLSIDE CREEPER SCOTCH PINE
Gl	RHUS AROMATICA `GRO-LOW` / GRO-LOW FRAGRANT SUMAC
ORNAMENTAL GRASSES	
Φ	CAREX MORROWII 'ICE DANCE' / ICE DANCE JAPANESE SEDGE
M	MUHLENBERGIA CAPILLARIS / PINK MUHLY GRASS
P	PENNISETUM ALOPECUROIDES `HAMELN` / HAMELN DWARF FOUNTAIN GRASS
PERENNIALS	
A	AMSONIA HUBRICHTII / ARKANSAS BLUESTAR
B	BERLANDIERA LYRATA / CHOCOLATE DAISY
o	COREOPSIS UPTICK™ GOLD & BRONZE PP28882 / TICKSEED
H	HELIANTHEMUM NUMMULARIUM 'WISLEY PINK' / WISLEY PINK SUNROSE
L	LAVANDULA ANGUSTIFOLIA 'MUNSTEAD' / MUNSTEAD ENGLISH LAVENDER
P	PHLOX PANICULATA 'BARPHFLARE' / FLAME™ RED GARDEN PHLOX

Scale: 1" = 20'-0"

0 10 20 40 60

n

blu line designs
planning | landscape architecture | desi

8719 S. Sandy Parkway
Sandy, UT 84070
p 801.913.7994

CLIENT

FARMINGTON CITY
CONTACT: SYLVIA CLARK
PH: 801.939.9295
EMAIL:
SCLARK@FARMINGTON.UTAH.GO

FARMINGTON

IVY ACRES PARK

1397 WEST COOK LANE
FARMINGTON, UT

REVISIONS

NO.	DATE	DESCRIPTION

Stamp

STATE OF UTAH
CORY A. SHUPE
Licensed Landscape Architect

03/06/2024

Designed By:	BP
Drawn By:	BP, TH
Date:	03/06/2024
Checked By:	CS
Project No:	22-246

Drawing Title

SHRUB PLAN

Drawing number

LP115

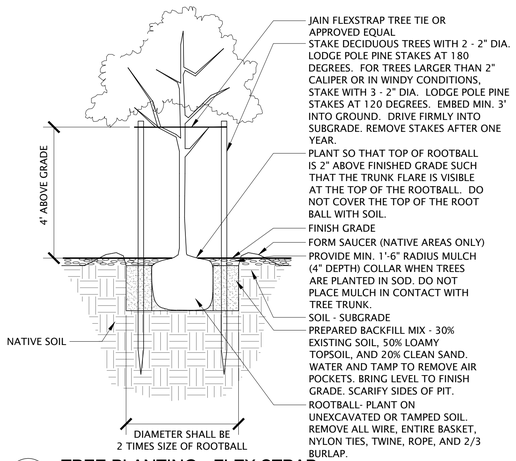

1 TREE PLANTING - FLEX STRAP

NOT TO SCALE

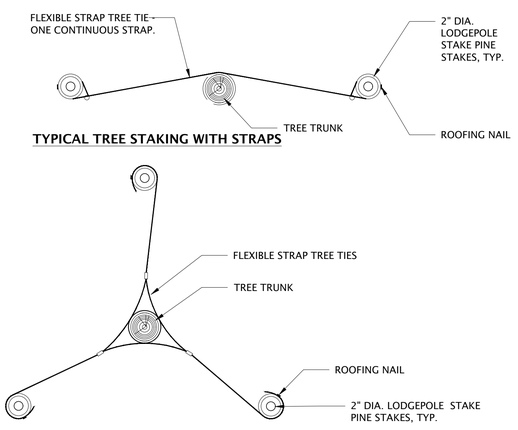

TREES IN WINDY CONDITIONS OR LARGER THAN 2" CAL.

2 TREE STAKING - FLEX STRAPS

NOT TO SCALE

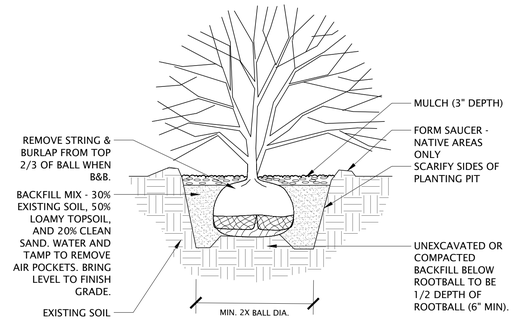

NOTES:
1. PLANT SO THAT TOP OF ROOT BALL IS 2" ABOVE FINISHED GRADE

3 SHRUB DETAIL

NOT TO SCALE

LANDSCAPE NOTES:

1. ALL CONSTRUCTION SHALL BE DONE IN ACCORDANCE WITH THE LATEST AMERICAN PUBLIC WORKS ASSOCIATION (APWA) AND FARMINGTON CITY STANDARDS, SPECIFICATIONS, AND DETAILS.

2. ALL PLANT MATERIAL SHALL BE GROWN IN CLIMATIC CONDITIONS SIMILAR TO THOSE IN THE LOCALITY OF THIS WORK AND SHALL CONFORM TO THE AMERICAN STANDARD FOR NURSERY STOCK, ANSI Z60.1 UNLESS OTHERWISE NOTED. PROVIDE TREES OF NORMAL GROWTH AND UNIFORM HEIGHTS, ACCORDING TO SPECIES, WITH STRAIGHT TRUNKS AND WELL DEVELOPED LEADERS, LATERALS, AND ROOTS.

3. THE CONTRACTOR SHALL CALL BLUE STAKES AT 1-800-662-4111 FOR UNDERGROUND UTILITY LOCATIONS AT LEAST 48 HOURS PRIOR TO COMMENCEMENT OF ANY CONSTRUCTION OR EXCAVATION.

4. EXISTING UTILITIES, EASEMENTS, AND STRUCTURES SHOWN ON THE DRAWINGS ARE IN ACCORDANCE WITH AVAILABLE RECORDS. THE CONTRACTOR SHALL VERIFY THE EXACT LOCATION, SIZE, TYPE, AND STRUCTURES TO BE ENCOUNTERED ON THE PROJECT PRIOR TO ANY EXCAVATION AND CONSTRUCTION IN THE VICINITY OF THE EXISTING UTILITIES AND STRUCTURES.

5. IT SHALL BE THE CONTRACTOR'S RESPONSIBILITY TO OBTAIN ALL REQUIRED PERMITS, LICENSES, AND APPROVALS REQUIRED TO LEGALLY AND RESPONSIBLY COMPLETE THE WORK.

6. THE CONTRACTOR IS RESPONSIBLE FOR THE REMOVAL, DISPOSAL, OR RELOCATION OF ALL OBSTRUCTIONS AND DEBRIS WITHIN THE DELINEATED CONSTRUCTION AREA PRIOR TO STARTING NEW CONSTRUCTION. THE CONTRACTOR IS ALSO RESPONSIBLE FOR THE REMOVAL AND DISPOSAL OF ANY DEBRIS RESULTING FROM NEW CONSTRUCTION.

7 CONTRACTOR SHALL TAKE PRECAUTIONS TO AVOID DAMAGE TO EXISTING FEATURES AND FACILITIES SCHEDULED TO REMAIN AS PART OF THE FINISHED CONSTRUCTION. REPAIR, REPLACEMENT, AND/OR REMOVAL AS DETERMINED BY OWNER SHALL BE AT THE CONTRACTOR'S EXPENSE.

8. CONTRACTOR SHALL ROUGH GRADE TO WITHIN +/- A TENTH OF A FOOT FROM FINISH GRADE. ALL TURF GRASS AREAS SHALL BE GRADED 6" BELOW PROPOSED FINISH GRADE. SHRUB BEDS SHALL BE GRADED 16" BELOW PROPOSED FINISH GRADE.

9. ALL COMPACTED AREAS DEVELOPED THROUGH CONSTRUCTION WITHIN PROPOSED LANDSCAPE AREAS SHALL BE SCARIFIED AND LOOSENED TO A DEPTH OF 12" PRIOR TO LANDSCAPE AND IRRIGATION WORK BEGINNING.

10. CONTRACTOR SHALL INSTALL A MIN. OF 4 INCHES OF PREMIUM OR AMENDED TOPSOIL FOR ALL TURF GRASS AREAS. INSTALL 12 INCHES OF PREMIUM OR AMENDED TOPSOIL IN ALL MANICURED SHRUB BEDS. CONTRACTOR SHALL TEST, AMEND, AND USE EXISTING STOCKPILE OF TOPSOIL ON SITE TO MEET SPECIFICATIONS. ALL PLANTING PITS SHALL RECEIVE PLANTING BACKFILL MIX PER SPECIFICATIONS.

11. CONTRACTOR SHALL INSTALL A MIN. OF 3 INCHES OF ROCK MULCH IN SHRUB BEDS AND 4 INCHES OF BARK MULCH ON WEED BARRIER FABRIC IN PERENNIAL BEDS. APPLY PRE-EMERGENT TO ALL PLANTING BEDS BEFORE INSTALLING MULCH.

12. NO PLANT SPECIES SUBSTITUTIONS WILL BE MADE WITHOUT APPROVAL OF OWNER.

13. ALL PLANT LAYOUT SHALL BE VERIFIED AND APPROVED IN FIELD BY OWNER PRIOR TO PLANTING. FAILURE TO RECEIVE APPROVAL MAY RESULT IN RE-WORK BY THE CONTRACTOR AT NO ADDITIONAL COST TO THE OWNER.

14. ALL AREAS WITHIN AND AFFECTED BY THIS PROJECT SHALL HAVE POSITIVE DRAINAGE. POSITIVE DRAINAGE SHALL BE PROVIDED TO DIRECT STORMWATER AWAY FROM ALL STRUCTURES.

15. ALL CLARIFICATIONS OF DISCREPANCIES BETWEEN THE DRAWINGS AND THE SITE SHALL BE BROUGHT TO THE ATTENTION OF THE OWNER PRIOR TO BEGINNING OF WORK.

16. CONTRACTOR SHALL PROVIDE A ONE YEAR WARRANTY ON ALL PLANT MATERIAL FROM THE DATE OF FINAL ACCEPTANCE.

blu line designs
planning | landscape architecture | desi

8719 S. Sandy Parkway
Sandy, UT 84070
p 801.913.7994

CLIENT

FARMINGTON CITY
CONTACT: SYLVIA CLARK
PH: 801.939.9295
EMAIL:
SCLARK@FARMINGTON.UTAH.GO

FARMINGTON

IVY ACRES PARK

1397 WEST COOK LANE
FARMINGTON, UT

REVISIONS

NO.	symmday	DESCRIPTION

Stamp

STATE OF UTAH
CORY A. SHURTZ
Licensed Landscape Architect

03/06/2024

Designed By:	BP
Drawn By:	BP, TH
Date:	03/06/2024
Checked By:	CS
Project No:	22-246

Drawing Title

LANDSCAPE NOTES & DETAILS

Drawing number

LP501

PLANT SCHEDULE

SYMBOL	BOTANICAL / COMMON NAME	CONT	CAL	QTY
DECIDUOUS TREES				
	GLEDITSIA TRIACANTHOS `SHADEMASTER` / SHADEMASTER HONEY LOCUST	B&B	2" CAL	11
	LIQUIDAMBAR STYRACIFLUA / SWEET GUM	B&B	2" CAL	15
	PLATANUS X ACERIFOLIA `EXCLAMATION` TM / EXCLAMATION LONDON PLANE TREE	B&B	2" CAL	18
	PRUNUS VIRGINIANA 'CANADA RED' MULTI-STEM / CANADA RED CHOKECHERRY	B&B	2" CAL	28
	QUERCUS BICOLOR / SWAMP WHITE OAK	B&B	2" CAL	14
	TAXODIUM DISTICHUM / BALD CYPRESS	B&B	2" CAL	10
	ZELKOVA SERRATA 'GREEN VASE' / ZELKOVA	B&B	2" CAL	54
EVERGREEN TREES				
	PICEA PUNGENS GLAUCA / COLORADO BLUE SPRUCE	B&B	8-10` HT	12
ORNAMENTAL TREES				
	CERCIS CANADENSIS / EASTERN REDBUD	B&B	2" CAL	9
	MALUS 'PRAIRIFIRE' / PRAIRIEFIRE FLOWERING CRABAPPLE	B&B	2" CAL	36
	MALUS 'SPRING SNOW' / FLOWERING CRABAPPLE	B&B	2" CAL	17
	PRUNUS SERRULATA `KWANZAN` / FLOWERING CHERRY	B&B	2" CAL	12

SYMBOL	BOTANICAL / COMMON NAME	CONT	QTY
SHRUBS			
BI	BERBERIS THUNBERGII 'BAILELLA' / LAMBRUSCO™ JAPANESE BARBERRY	5 GAL	59
D	CARYOPTERIS X CLANDONENSIS 'DARK KNIGHT' / DARK KNIGHT BLUEBEARD	5 GAL	22
Jc	JUNIPERUS CHINENSIS 'MONTANA MOSS®' / CHINESE JUNIPER	5 GAL	10
Jw	JUNIPERUS SCOPULORUM 'WICHITA BLUE' / WICHITA BLUE JUNIPER	5 GAL	11
Pi	PHYSOCARPUS OPULIFOLIUS 'DONNA MAY' / LITTLE DEVIL NINEBARK	5 GAL	47
Ps	PINUS MUGO `SLOWMOUND` / MUGO PINE	5 GAL	22
Pc	PINUS SYLVESTRIS 'HILLSIDE CREEPER' / HILLSIDE CREEPER SCOTCH PINE	5 GAL	41
Gl	RHUS AROMATICA `GRO-LOW` / GRO-LOW FRAGRANT SUMAC	5 GAL	116
ORNAMENTAL GRASSES			
Φ	CAREX MORROWII 'ICE DANCE' / ICE DANCE JAPANESE SEDGE	1 GAL	247
M	MUHLENBERGIA CAPILLARIS / PINK MUHLY GRASS	1 GAL	154
P	PENNISETUM ALOPECUROIDES `HAMELN` / HAMELN DWARF FOUNTAIN GRASS	1 GAL	83
PERENNIALS			
A	AMSONIA HUBRICHTII / ARKANSAS BLUESTAR	1 GAL	210
B	BERLANDIERA LYRATA / CHOCOLATE DAISY	1 GAL	148
c	COREOPSIS UPTICK™ GOLD & BRONZE PP28882 / TICKSEED	1 GAL	286
H	HELIANTHEMUM NUMMULARIUM 'WISLEY PINK' / WISLEY PINK SUNROSE	1 GAL	126
L	LAVANDULA ANGUSTIFOLIA 'MUNSTEAD' / MUNSTEAD ENGLISH LAVENDER	1 GAL	217
p	PHLOX PANICULATA 'BARPHFLARE' / FLAME™ RED GARDEN PHLOX	1 GAL	210
GROUND COVERS			
	BIOMEADOW BY BIOGRASS / BIOMEADOW	SEED	81,622 SF
	PANICUM VIRGATUM 'CHEYENNE SKY' / CHEYENNE SKY SWITCH GRASS	1 GAL	493
	PLANTING BED / MULCH	BED	36,080 SF
	POA PRATENSIS / KENTUCKY BLUEGRASS	SOD	192,904 SF
	ROCK MULCH - 3" DEPTH, 2"-4" WASHED SOUTHTOWN COBBLE	BED	9,472 SF

* ALL SHOWN QUANTITIES ARE PROVIDED FOR CONVENIENCE ONLY. CONTRACTOR IS RESPONSIBLE TO CONDUCT INDEPENDENT TAKEOFFS TO ESTABLISH QUANTITIES. PLAN SYMBOL QUANTITIES OVERRIDE QUANTITIES SHOWN IN SCHEDULE.

NORTHERN UPLAND KIT PLANT SPECIES - BID ALTERNATE:

Common Name	Scientific Name	Mar	Apr	May	Jun	Jul	Aug	Sep	Oct
Forbs									
Gooseberry-leaf globemallow	*Sphaeralcea grossulariifolia*								
Showy milkweed	*Asclepias speciosa Total*								
Aspen Fleabane	*Erigeron speciosus*								
Utah sweetvetch	*Hedysarum boreale*								
One flower sunflower	*Helianthella uniflora*								
Firecracker penstemon	*Penstemon eatonii*								
Munroe's globemallow	*Sphaeralcea munorana*								
Perky Sue	*Tetraneuris acaulis*								
Thick leaf penstemon	*Penstemon pachyphyllus*								
Palmer's penstemon	*Penstemon palmeri*								
Sulfur flower buckwheat	*Eriogonum umbellatum*								
Blanket flower	*Gaillardia aristata*								
Dusty penstemon	*Penstemon comarrhenus*								
Rocky Mtn penstemon	*Pestemon strictus*								
Alderleaf mountain mohogany	*Cercocarpus montanus*								
Fernbush	*Chamaebatiaria millefolium*								
Showy golden eye	*Heliomeris multiflora*								
Desert 4'o clock	*Mirabilis multiflora*								
Fire chalice	*Zauschneria garrettii*								
Grasses									
Blue grama	*Bouteloua gracilis*								
Great Basin wildrye	*Elymus cinereus*								
Little bluestem	*Schizachyrium scoparium*								
Sideoats grama	*Bouteloua curitpendula*								
Indian ricegrass	*Oryzopsis hymenoides*								
Bluebunch wheatgrass	*Pseudoroegneria spicata*								

NOTES:
1. NATIVE SPECIES KITS SHOULD BE USED TO SUPPLEMENT THE AREAS AROUND THE WETLANDS WITH BIOMEADOW GRASS IN THEM.
2. KITS ARE ONLY TO BE USED IF PROJECT IS AWARDED THEM BY THE UTAH POLLINATOR HABITAT PROGRAM.

SOUTHERN WETLAND KIT PLANT SPECIES - BID ALTERNATE:

Common Name	Scientific Name	Mar	Apr	May	Jun	Jul	Aug	Sep	Oct
Forbs									
Rough bugleweed	*Lycopus asper*								
Yerba mansa	*Anemopsis californica*								
Showy milkweed	*Asclepias speciosa*								
Tall evening primrose	*Oenothera elata*								
Water groundsel	*Senecio hydrophilus*								
Saltmarsh fleabane	*Pluchea odorata*								
Goldenrod	*Solidago canadensis*								
White heath aster	*Aster ericoides*								
Nuttalls sunflower	*Helianthus nuttallii*								
Grasses/sedges									
Field sedge	*Carex praegracilis*								
Alkali sacaton	*Sporobolus airoides*								

blu line designs
planning | landscape architecture | desi
8719 S. Sandy Parkway
Sandy, UT 84070
p 801.913.7994

CLIENT
FARMINGTON CITY
CONTACT: SYLVIA CLARK
PH: 801.939.9295
EMAIL:
SCLARK@FARMINGTON.UTAH.GO

FARMINGTON

IVY ACRES PARK

1397 WEST COOK LANE
FARMINGTON, UT

REVISIONS

NO.	DATE	DESCRIPTION

Stamp

STATE OF UTAH
CORY A. SHUPE
6373990-5301
Licensed Landscape Architect
03/06/2024

Designed By:	BP
Drawn By:	BP, TH
Date:	03/06/2024
Checked By:	CS
Project No:	22-246

Drawing Title
LANDSCAPE PLAN SCHEDULE

Drawing number
LP502

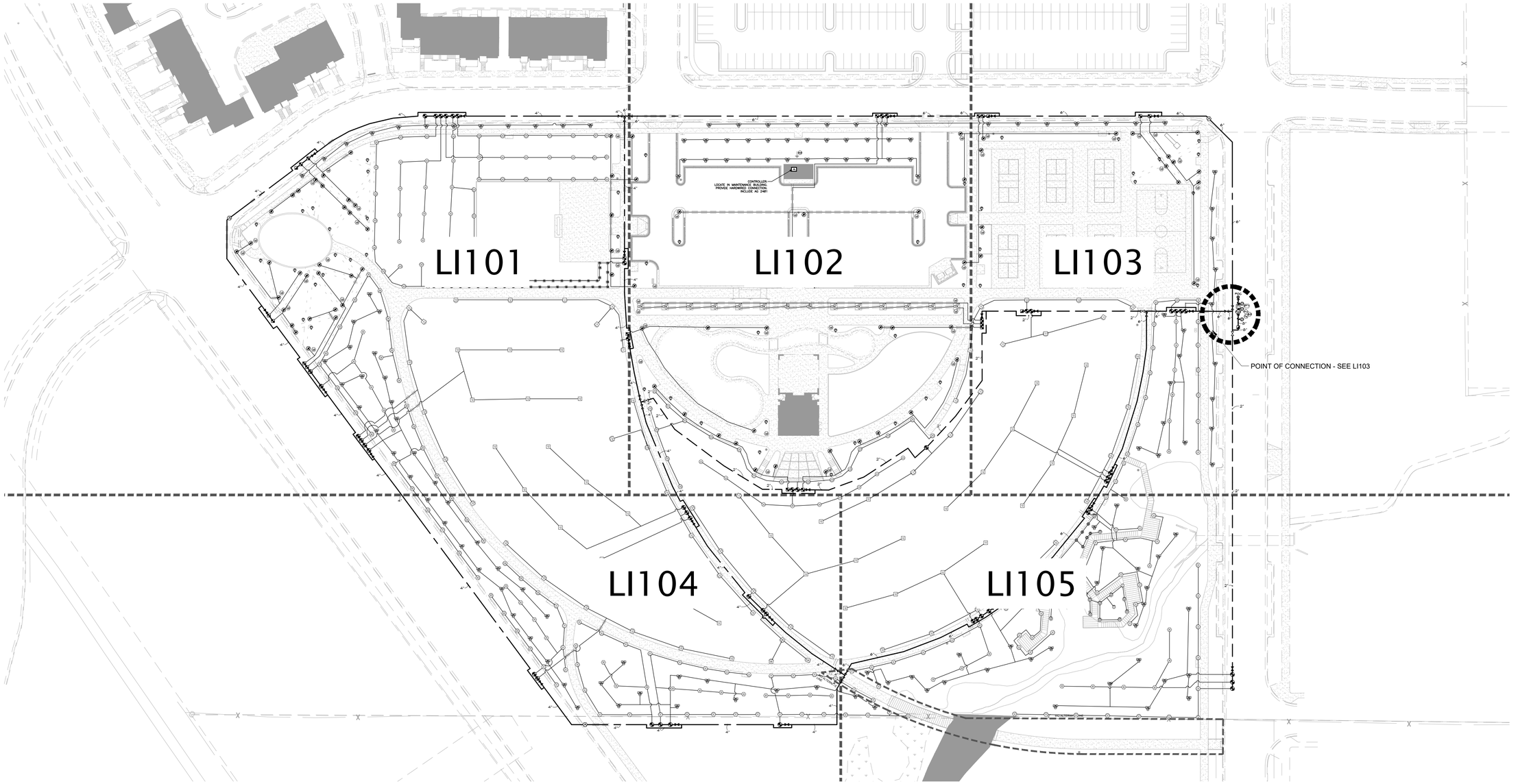

Scale: 1" = 50'-0"

0 25 50 100 150

blu line designs
planning | landscape architecture | design

8719 S. Sandy Parkway
Sandy, UT 84070
p 801.913.7994

CLIENT

FARMINGTON CITY
CONTACT: SYLVIA CLARK
PH: 801.939.9295
EMAIL:
SCLARK@FARMINGTON.UTAH.GOV

FARMINGTON

IVY ACRES PARK

1397 WEST COOK LANE
FARMINGTON, UT

REVISIONS

NO.	symmetry	DESCRIPTION

Stamp

STATE OF UTAH
CORY A. SHUPE
Licensed Landscape Architect
03/06/2024

Designed By:	BP
Drawn By:	BP, TH
Date:	03/06/2024
Checked By:	CS
Project No:	22-246

Drawing Title

OVERALL IRRIGATION PLAN

Drawing number

LI100

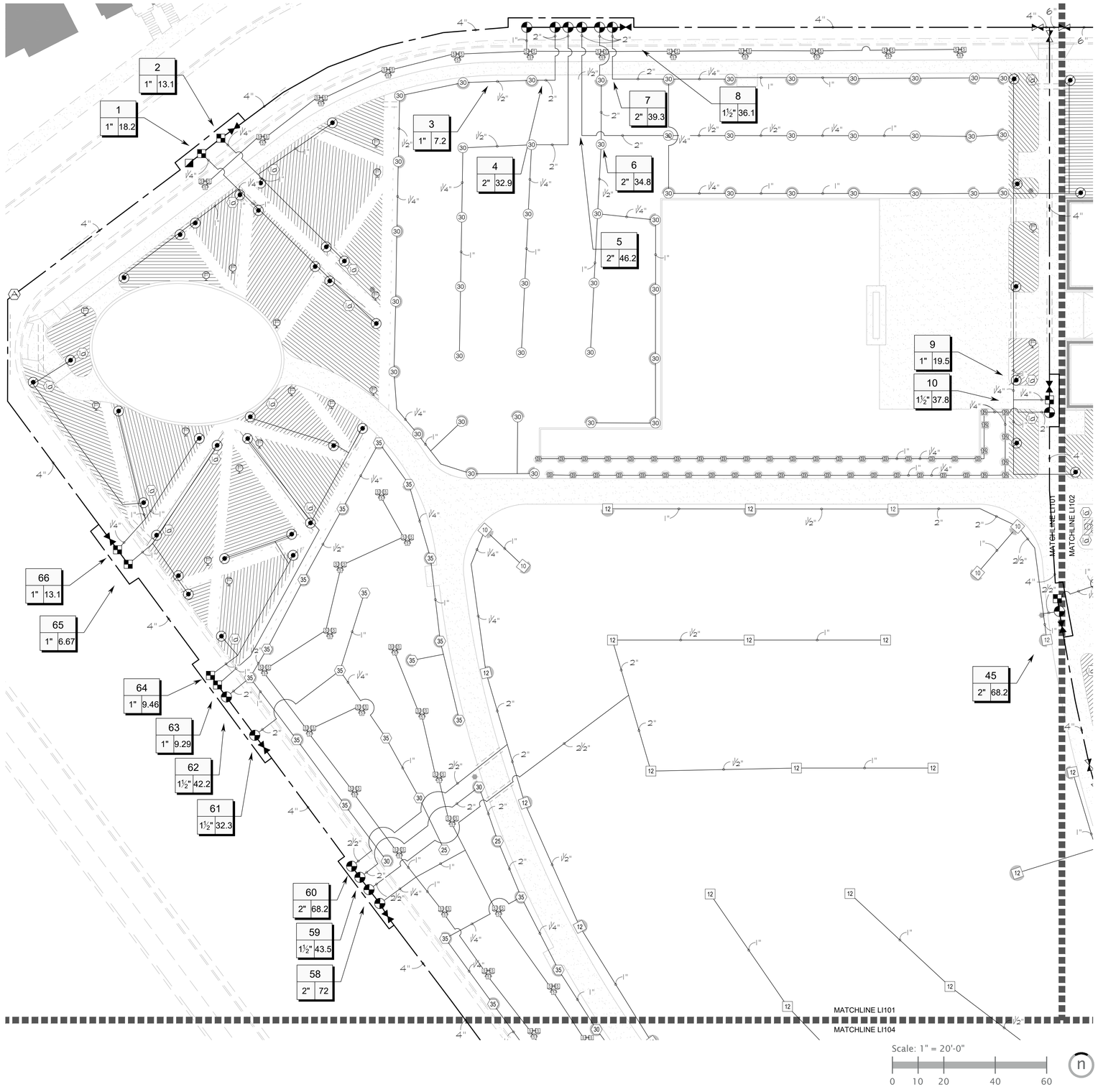

IRRIGATION SCHEDULE

SYMBOL	MANUFACTURER/MODEL	QTY
39 Q T H F	RAIN BIRD 1806-SAM-PRS30 *TURF SPRAY* 10 SERIES MPR	39
12 Q T H TQ F	RAIN BIRD 1806-SAM-PRS30 *TURF SPRAY* 12 SERIES MPR	8
5 Q H F	RAIN BIRD 1804-SAM-PRS30 *5H TREES ONLY* 5 SERIES MPR	435
T	HUNTER MP CORNER PROS-12-PRS40-CV	1
M L O	HUNTER MP1000 PROS-12-PRS40-CV	20
800 A 800 F	HUNTER MP800SR PROS-12-PRS40-CV	6

SYMBOL	MANUFACTURER/MODEL	QTY
25	RAIN BIRD 5006-PL-PC/FC-SAM-R-MPR *TURF* 25	7
30	RAIN BIRD 5006-PL-PC/FC-SAM-R-MPR *TURF* 30	54
35	RAIN BIRD 5006-PL-PC/FC-SAM-R-MPR *TURF* 35	17
04	RAIN BIRD 8005 *TURF ROTOR* 04	2
06	RAIN BIRD 8005 *TURF ROTOR* 06	2
10	RAIN BIRD 8005 *TURF ROTOR* 10	7
12	RAIN BIRD 8005 *TURF ROTOR* 12	78
25	RAIN BIRD 5012-PL-PC/FC-SAM-R-MPR *NATIVE* 25	52
30	RAIN BIRD 5012-PL-PC/FC-SAM-R-MPR *NATIVE* 30	35
35	RAIN BIRD 5012-PL-PC/FC-SAM-R-MPR *NATIVE* 35	77

SYMBOL	MANUFACTURER/MODEL/DESCRIPTION	QTY
	RAIN BIRD XCZ-100-PRB-COM DRIP CONTROL VALVE KIT	18
	PIPE TRANSITION POINT S/40 PVC TO DRIP TUBING	79
	HUNTER PLD-BV DRIP FLUSH VALVE	52
d	HUNTER ECO-ID OPERATING INDICATOR	46
5.0 7.0 10.0	RAIN BIRD 1804-SAM-PA80-PCT LOW FLOW BUBBLER	45
	AREA TO RECEIVE DRIPLINE RAIN BIRD XFS-CV-06-12 *SHRUB AREAS* 0.6 GPH EMITTERS, AT 12" O/C SPACING IN TUBING. DRIPLINE LATERALS SPACED AT 24" APART.	19,608 L.F.
	AREA TO RECEIVE DRIPLINE RAIN BIRD XFS-CV-09-12 *SWITCH GRASS* 0.9 GPH EMITTERS AT 12" O/C IN TUBING. DRIPLINE LATERALS SPACED AT 12" APART.	2,407 L.F.

SYMBOL	MANUFACTURER/MODEL/DESCRIPTION	QTY
	RAIN BIRD PESB REMOTE CONTROL VALVE	51
	RAIN BIRD 44-NP QUICK COUPLER VALVE 1", TWO-PIECE. INCLUDE LASCO G213S-212 SNAP-LOK SWING JOINT.	4
	LEEMCO LGT-XXX-SS-304-W STAINLESS GATE VALVE LEEMCO STAINLESS STEEL GATE VALVE WITH WHEEL HANDLE. LINE SIZE.	3
	LEEMCO LMV-SB/BB-XX GATE VALVE	13
	LEEMCO LV-200 LATERAL VALVE W/ LT-XXX LATERAL TEE	24
WTC	WEATHERTRAK WTF3-600-PD-NC 6" HYDROMETER 6"	1
	VALMATIC 1" 201C.2 CONBINATION AIR VALVE	3
	LEEMCO LCT-075-SS-316 3/4" DRAIN VALVE	3
	WEATHERTRAK WTOXR-C-H2O96-CWM CONTROLLER WALL MOUNT INCLUDE 5 ADDITIONAL YEARS SERVICE, AND 'SITE CONSULT' COMPLETE SYSTEM COMMISSIONING BY FACTORY TRAINED AND AUTHORIZED TECHNICIAN. CONTACT BRADY PITCHER OF SPRINKLER SUPPLY CO 801 592-6490.	1
	PAIGE WIRE "V" GROUNDING GRID	1
FS	WEATHERTRAK WT2W-H2O-FS *FLOW SENSOR DECODER*	1
MV	WEATHERTRAK WT2W-H2O-MV *MASTER VALVE DECODER*	1
SG	WEATHERTRAK WT2W-H2O-SA *SURGE ARRESTOR*	2
	AMIAD FILTOMAT M108-LP 8" 130 MICRON FILTER PLANT	1
DRV	ZURN WILKINS PRV 8" FLANGED ZW209BP W LF BYPASS	1
POC	8" SECONDARY POINT OF CONNECTION MINIMUMS REQUIRED: 8", 700 GPM`S @ 110 PSI DYNAMIC. LESS THAN MINIMUMS MAY REQUIRE RE-DESIGN.	1
	IRRIGATION LATERAL LINE: PVC SCHEDULE 40 1-3". USE ONLY IPS WELD-ON P-70 PRIMER & 711 GLUE. ALL LATERAL FITTINGS PVC S/40.	20,996 L.F.
	IRRIGATION MAINLINE: PVC SCHEDULE 40 1-1/4 - 3" PIPE. S/80 FITTINGS, USE IPS WELD-ON P-70 PRIMER AND 711 GLUE FOR ALL JOINTS THROUGH 2"; USE LEEMCO JOINT RESTRAINT FITTINGS FOR 2-1/2" AND LARGER.	1,575 L.F.
	IRRIGATION MAINLINE: PVC CL/200 SDR 21 FOR SIZES 4" AND LARGER. USE LEEMCO DUCTILE IRON FITTINGS WITH JOINT RESTRAINTS.	3,693 L.F.
	PIPE SLEEVE: PVC S/40 USE SEPARATE SLEEVES FOR PIPE AND WIRING. WIRING SHALL BE IN GRAY ELECTRICAL CONDUIT. EXTEND 12" BEYOND EDGES OF PAVING OR CONSTRUCTION.	1,244 L.F.

Valve Callout

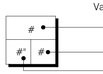

blu line designs
planning | landscape architecture | design
8719 S. Sandy Parkway
Sandy, UT 84070
p 801.913.7994

CLIENT

FARMINGTON CITY
CONTACT: SYLVIA CLARK
PH: 801.939.9295
EMAIL:
SCLARK@FARMINGTON.UTAH.GOV

FARMINGTON

IVY ACRES PARK

1397 WEST COOK LANE
FARMINGTON, UT

REVISIONS

NO.	yy/mm/dd	DESCRIPTION

Stamp

STATE OF UTAH
CORY A. SHUPE
Licensed Landscape Architect

03/06/2024

Designed By:	BP
Drawn By:	BP, TH
Date:	03/06/2024
Checked By:	CS
Project No:	22-246

Drawing Title

IRRIGATION PLAN

Drawing number

LI101

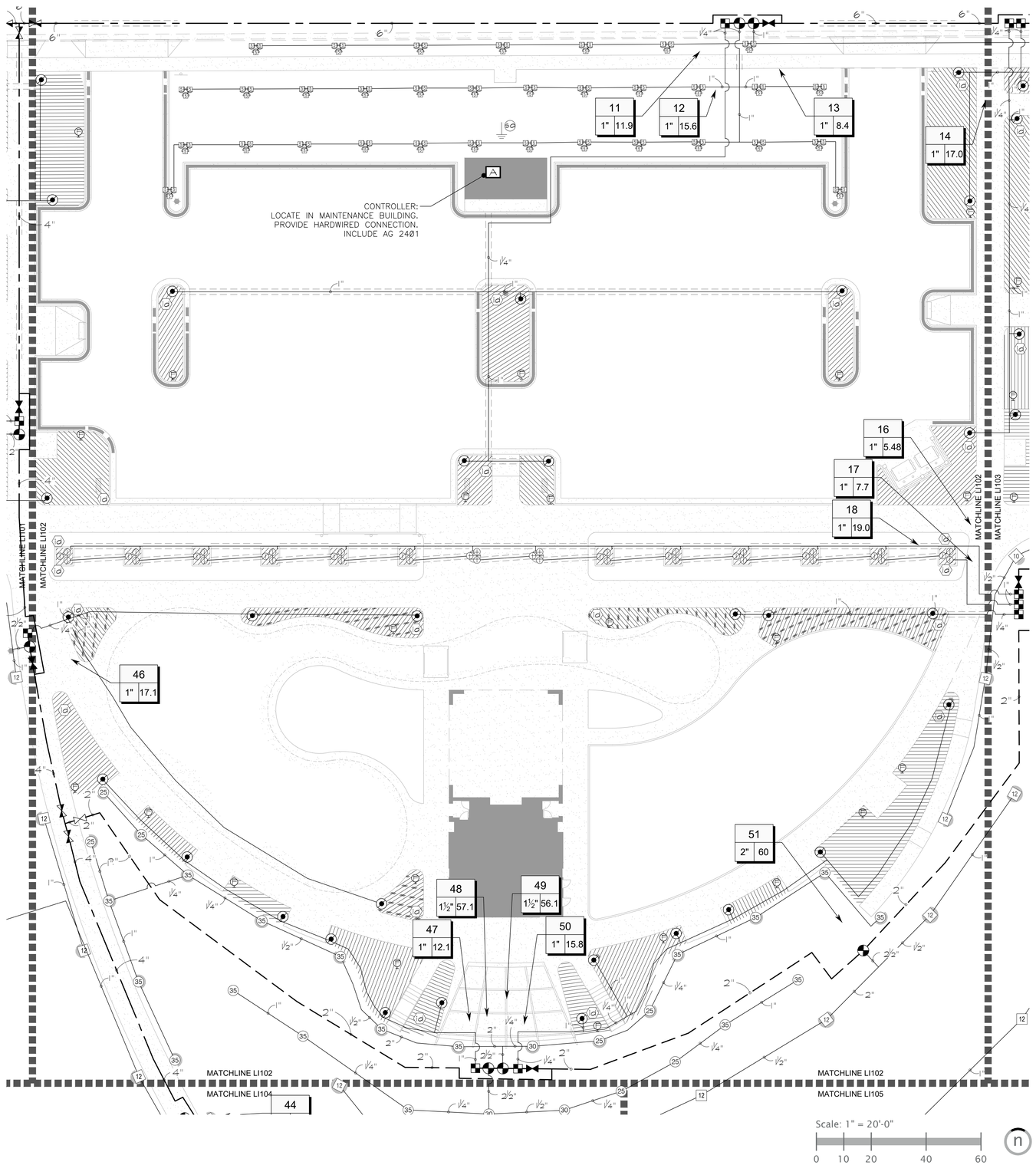

IRRIGATION SCHEDULE

SYMBOL	MANUFACTURER/MODEL	QTY
18 Q 18 T 18 H 18 F	RAIN BIRD 1806-SAM-PRS30 *TURF SPRAY* 10 SERIES MPR	39
12 Q 12 T 12 H 12 TQ 12 F	RAIN BIRD 1806-SAM-PRS30 *TURF SPRAY* 12 SERIES MPR	8
Q H F	RAIN BIRD 1804-SAM-PRS30 *5H TREES ONLY* 5 SERIES MPR	435
T	HUNTER MP CORNER PROS-12-PRS40-CV	1
M L O	HUNTER MP1000 PROS-12-PRS40-CV	20
800 A 800 F	HUNTER MP800SR PROS-12-PRS40-CV	6

SYMBOL	MANUFACTURER/MODEL	QTY
25	RAIN BIRD 5006-PL-PC/FC-SAM-R-MPR *TURF* 25	7
30	RAIN BIRD 5006-PL-PC/FC-SAM-R-MPR *TURF* 30	54
35	RAIN BIRD 5006-PL-PC/FC-SAM-R-MPR *TURF* 35	17
04	RAIN BIRD 8005 *TURF ROTOR* 04	2
06	RAIN BIRD 8005 *TURF ROTOR* 06	2
10	RAIN BIRD 8005 *TURF ROTOR* 10	7
12	RAIN BIRD 8005 *TURF ROTOR* 12	78
25	RAIN BIRD 5012-PL-PC/FC-SAM-R-MPR *NATIVE* 25	52
30	RAIN BIRD 5012-PL-PC/FC-SAM-R-MPR *NATIVE* 30	35
35	RAIN BIRD 5012-PL-PC/FC-SAM-R-MPR *NATIVE* 35	77

SYMBOL	MANUFACTURER/MODEL/DESCRIPTION	QTY
	RAIN BIRD XCZ-100-PRB-COM DRIP CONTROL VALVE KIT	18
	PIPE TRANSITION POINT S/40 PVC TO DRIP TUBING	79
	HUNTER PLD-BV DRIP FLUSH VALVE	52
	HUNTER ECO-ID OPERATING INDICATOR	46
5.0 7.0 10.0	RAIN BIRD 1804-SAM-PA80-PCT LOW FLOW BUBBLER	45
	AREA TO RECEIVE DRIPLINE RAIN BIRD XFS-CV-06-12 *SHRUB AREAS* 0.6 GPH EMITTERS, AT 12" O/C SPACING IN TUBING. DRIPLINE LATERALS SPACED AT 24" APART.	19,608 L.F.
	AREA TO RECEIVE DRIPLINE RAIN BIRD XFS-CV-09-12 *SWITCH GRASS* 0.9 GPH EMITTERS AT 12" O/C IN TUBING. DRIPLINE LATERALS SPACED AT 12" APART.	2,407 L.F.

SYMBOL	MANUFACTURER/MODEL/DESCRIPTION	QTY
	RAIN BIRD PESB REMOTE CONTROL VALVE	51
	RAIN BIRD 44-NP QUICK COUPLER VALVE 1", TWO-PIECE. INCLUDE LASCO G213S-212 SNAP-LOK SWING JOINT.	4
	LEEMCO LGT-XXX-SS-304-W STAINLESS GATE VALVE LEEMCO STAINLESS STEEL GATE VALVE WITH WHEEL HANDLE. LINE SIZE.	3
	LEEMCO LMV-SB/BB-XX GATE VALVE	13
	LEEMCO LV-200 LATERAL VALVE W/ LT-XXX LATERAL TEE	24
FLOW	WEATHERTRAK WTF3-600-PD-NC 6" HYDROMETER	1
	VALMATIC 1" 201C.2 CONBINATION AIR VALVE	3
	LEEMCO LCT-075-SS-316 3/4" DRAIN VALVE	3
	WEATHERTRAK WTOXR-C-H2O96-CWM CONTROLLER WALL MOUNT INCLUDE 5 ADDITIONAL YEARS SERVICE, AND 'SITE CONSULT' COMPLETE SYSTEM COMMISSIONING BY FACTORY TRAINED AND AUTHORIZED TECHNICIAN. CONTACT BRADY PITCHER OF SPRINKLER SUPPLY CO 801 592-6490.	1
	PAIGE WIRE 'V' GROUNDING GRID	1
FS	WEATHERTRAK WT2W-H2O-FS *FLOW SENSOR DECODER*	1
MV	WEATHERTRAK WT2W-H2O-MV *MASTER VALVE DECODER*	1
SA	WEATHERTRAK WT2W-H2O-SA *SURGE ARRESTOR*	2
	AMIAD FILTOMAT M108-LP 8" 130 MICRON FILTER PLANT	1
PRV	ZURN WILKINS PRV 8" FLANGED ZW209BP W LF BYPASS	1
POC	8" SECONDARY POINT OF CONNECTION MINIMUMS REQUIRED: 8", 700 GPM`S @ 110 PSI DYNAMIC. LESS THAN MINIMUMS MAY REQUIRE RE-DESIGN.	1
	IRRIGATION LATERAL LINE: PVC SCHEDULE 40 1-3", USE ONLY IPS WELD-ON P-70 PRIMER & 711 GLUE. ALL LATERAL FITTINGS PVC S/40.	20,996 L.F.
	IRRIGATION MAINLINE: PVC SCHEDULE 40 1-1/4 - 3" PIPE. S/80 FITTINGS, USE IPS WELD-ON P-70 PRIMER AND 711 GLUE FOR ALL JOINTS THROUGH 2"; USE LEEMCO JOINT RESTRAINT FITTINGS FOR 2-1/2" AND LARGER.	1,575 L.F.
	IRRIGATION MAINLINE: PVC CL/200 SDR 21 FOR SIZES 4" AND LARGER. USE LEEMCO DUCTILE IRON FITTINGS WITH JOINT RESTRAINTS.	3,693 L.F.
	PIPE SLEEVE: PVC S/40 USE SEPARATE SLEEVES FOR PIPE AND WIRING, WIRING SHALL BE IN GRAY ELECTRICAL CONDUIT. EXTEND 12" BEYOND EDGES OF PAVING OR CONSTRUCTION.	1,244 L.F.

Valve Callout

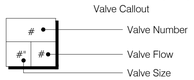

blu line designs
planning | landscape architecture | design
8719 S. Sandy Parkway
Sandy, UT 84070
p 801.913.7994

CLIENT

FARMINGTON CITY
CONTACT: SYLVIA CLARK
PH: 801.939.9295
EMAIL:
SCLARK@FARMINGTON.UTAH.GOV

FARMINGTON

IVY ACRES PARK

1397 WEST COOK LANE
FARMINGTON, UT

REVISIONS

NO.	MM/DD/YY	DESCRIPTION

Stamp

STATE OF UTAH
CORY A. SHUPE
Licensed Landscape Architect
03/06/2024

Designed By:	BP
Drawn By:	BP, TH
Date:	03/06/2024
Checked By:	CS
Project No:	22-246

Drawing Title

IRRIGATION PLAN

Drawing number

LI102

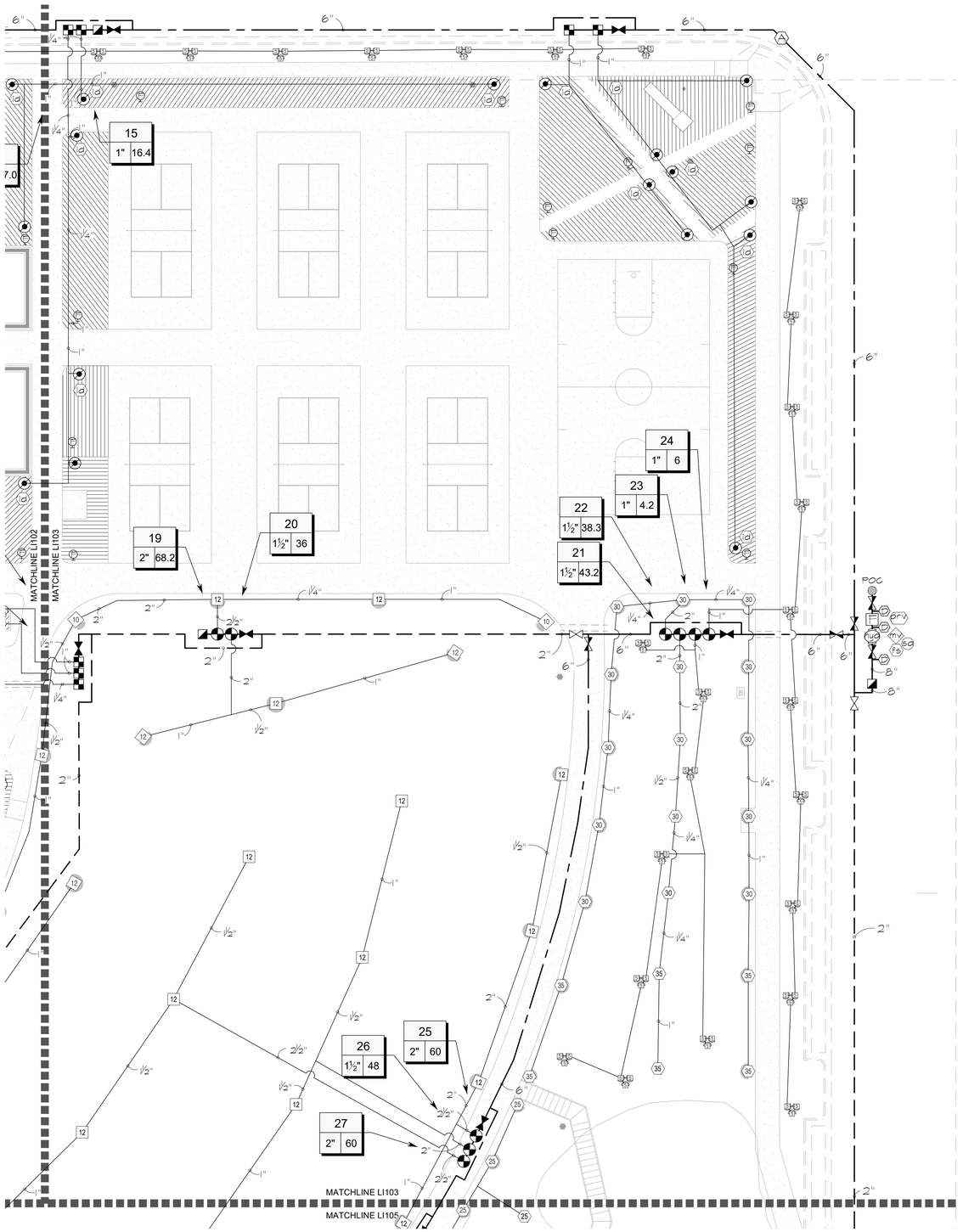

IRRIGATION SCHEDULE

SYMBOL	MANUFACTURER/MODEL	QTY
Q T H F	RAIN BIRD 1806-SAM-PRS30 *TURF SPRAY* 10 SERIES MPR	39
Q T H TQ F	RAIN BIRD 1806-SAM-PRS30 *TURF SPRAY* 12 SERIES MPR	8
Q H F	RAIN BIRD 1804-SAM-PRS30 *5H TREES ONLY* 5 SERIES MPR	435
T	HUNTER MP CORNER PROS-12-PRS40-CV	1
M L O	HUNTER MP1000 PROS-12-PRS40-CV	20
800 A 800 F	HUNTER MP800SR PROS-12-PRS40-CV	6

SYMBOL	MANUFACTURER/MODEL	QTY
25	RAIN BIRD 5006-PL-PC/FC-SAM-R-MPR *TURF* 25	7
30	RAIN BIRD 5006-PL-PC/FC-SAM-R-MPR *TURF* 30	54
35	RAIN BIRD 5006-PL-PC/FC-SAM-R-MPR *TURF* 35	17
04	RAIN BIRD 8005 *TURF ROTOR* 04	2
06	RAIN BIRD 8005 *TURF ROTOR* 06	2
10	RAIN BIRD 8005 *TURF ROTOR* 10	7
12	RAIN BIRD 8005 *TURF ROTOR* 12	78
25	RAIN BIRD 5012-PL-PC/FC-SAM-R-MPR *NATIVE* 25	52
30	RAIN BIRD 5012-PL-PC/FC-SAM-R-MPR *NATIVE* 30	35
35	RAIN BIRD 5012-PL-PC/FC-SAM-R-MPR *NATIVE* 35	77

SYMBOL	MANUFACTURER/MODEL/DESCRIPTION	QTY
	RAIN BIRD XCZ-100-PRB-COM DRIP CONTROL VALVE KIT	18
	PIPE TRANSITION POINT S/40 PVC TO DRIP TUBING	79
	HUNTER PLD-BV DRIP FLUSH VALVE	52
	HUNTER ECO-ID OPERATING INDICATOR	46
5.0 7.0 10.0	RAIN BIRD 1804-SAM-PA80-PCT LOW FLOW BUBBLER	45
	AREA TO RECEIVE DRIPLINE RAIN BIRD XFS-CV-06-12 *SHRUB AREAS* 0.6 GPH EMITTERS, AT 12" O/C SPACING IN TUBING. DRIPLINE LATERALS SPACED AT 24" APART.	19,608 L.F.
	AREA TO RECEIVE DRIPLINE RAIN BIRD XFS-CV-09-12 *SWITCH GRASS* 0.9 GPH EMITTERS AT 12" O/C IN TUBING. DRIPLINE LATERALS SPACED AT 12" APART.	2,407 L.F.

SYMBOL	MANUFACTURER/MODEL/DESCRIPTION	QTY
	RAIN BIRD PESB REMOTE CONTROL VALVE	51
	RAIN BIRD 44-NP QUICK COUPLER VALVE 1", TWO-PIECE. INCLUDE LASCO G213S-212 SNAP-LOK SWING JOINT.	4
	LEEMCO LGT-XXX-SS-304-W STAINLESS GATE VALVE LEEMCO STAINLESS STEEL GATE VALVE WITH WHEEL HANDLE. LINE SIZE.	3
	LEEMCO LMV-SB/BB-XX GATE VALVE	13
	LEEMCO LV-200 LATERAL VALVE W/ LT-XXX LATERAL TEE	24
FLOW SIZE	WEATHERTRAK WTF3-600-PD-NC 6" HYDROMETER 6"	1
A	VALMATIC 1" 201C.2 CONBINATION AIR VALVE	3
D	LEEMCO LCT-075-SS-316 3/4" DRAIN VALVE	3
A	WEATHERTRAK WTOXR-C-H2O96-CWM CONTROLLER WALL MOUNT INCLUDE 5 ADDITIONAL YEARS SERVICE, AND 'SITE CONSULT' COMPLETE SYSTEM COMMISSIONING BY FACTORY TRAINED AND AUTHORIZED TECHNICIAN. CONTACT BRADY PITCHER OF SPRINKLER SUPPLY CO 801 592-6490.	1
	PAIGE WIRE 'V' GROUNDING GRID	1
FS	WEATHERTRAK WT2W-H2O-FS *FLOW SENSOR DECODER*	1
MV	WEATHERTRAK WT2W-H2O-MV *MASTER VALVE DECODER*	1
SA	WEATHERTRAK WT2W-H2O-SA *SURGE ARRESTOR*	2
F	AMIAD FILTOMAT M108-LP 8" 130 MICRON FILTER PLANT	1
PRV	ZURN WILKINS PRV 8" FLANGED ZW209BP W LF BYPASS	1
POC	8" SECONDARY POINT OF CONNECTION MINIMUMS REQUIRED: 8", 700 GPM`S @ 110 PSI DYNAMIC. LESS THAN MINIMUMS MAY REQUIRE RE-DESIGN.	1
	IRRIGATION LATERAL LINE: PVC SCHEDULE 40 1-3". USE ONLY IPS WELD-ON P-70 PRIMER & 711 GLUE. ALL LATERAL FITTINGS PVC S/40.	20,996 L.F.
	IRRIGATION MAINLINE: PVC SCHEDULE 40 1-1/4 - 3" PIPE. S/80 FITTINGS, USE IPS WELD-ON P-70 PRIMER AND 711 GLUE FOR ALL JOINTS THROUGH 2"; USE LEEMCO JOINT RESTRAINT FITTINGS FOR 2-1/2" AND LARGER.	1,575 L.F.
	IRRIGATION MAINLINE: PVC CL/200 SDR 21 FOR SIZES 4" AND LARGER. USE LEEMCO DUCTILE IRON FITTINGS WITH JOINT RESTRAINTS.	3,693 L.F.
	PIPE SLEEVE: PVC S/40 USE SEPARATE SLEEVES FOR PIPE AND WIRING, WIRING SHALL BE IN GRAY ELECTRICAL CONDUIT. EXTEND 12" BEYOND EDGES OF PAVING OR CONSTRUCTION.	1,244 L.F.

Valve Callout

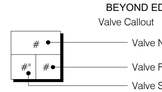

blu line designs
planning | landscape architecture | design
8719 S. Sandy Parkway
Sandy, UT 84070
p 801.913.7994

CLIENT

FARMINGTON CITY
CONTACT: SYLVIA CLARK
PH: 801.939.9295
EMAIL:
SCLARK@FARMINGTON.UTAH.GOV

IVY ACRES PARK

1397 WEST COOK LANE
FARMINGTON, UT

REVISIONS

NO.	symmetry	DESCRIPTION

Stamp

STATE OF UTAH
CORY A. SIVERT
Licensed Landscape Architect
03/06/2024

Designed By:	BP
Drawn By:	BP, TH
Date:	03/06/2024
Checked By:	CS
Project No:	22-246

Drawing Title

IRRIGATION PLAN

Drawing number

LI103

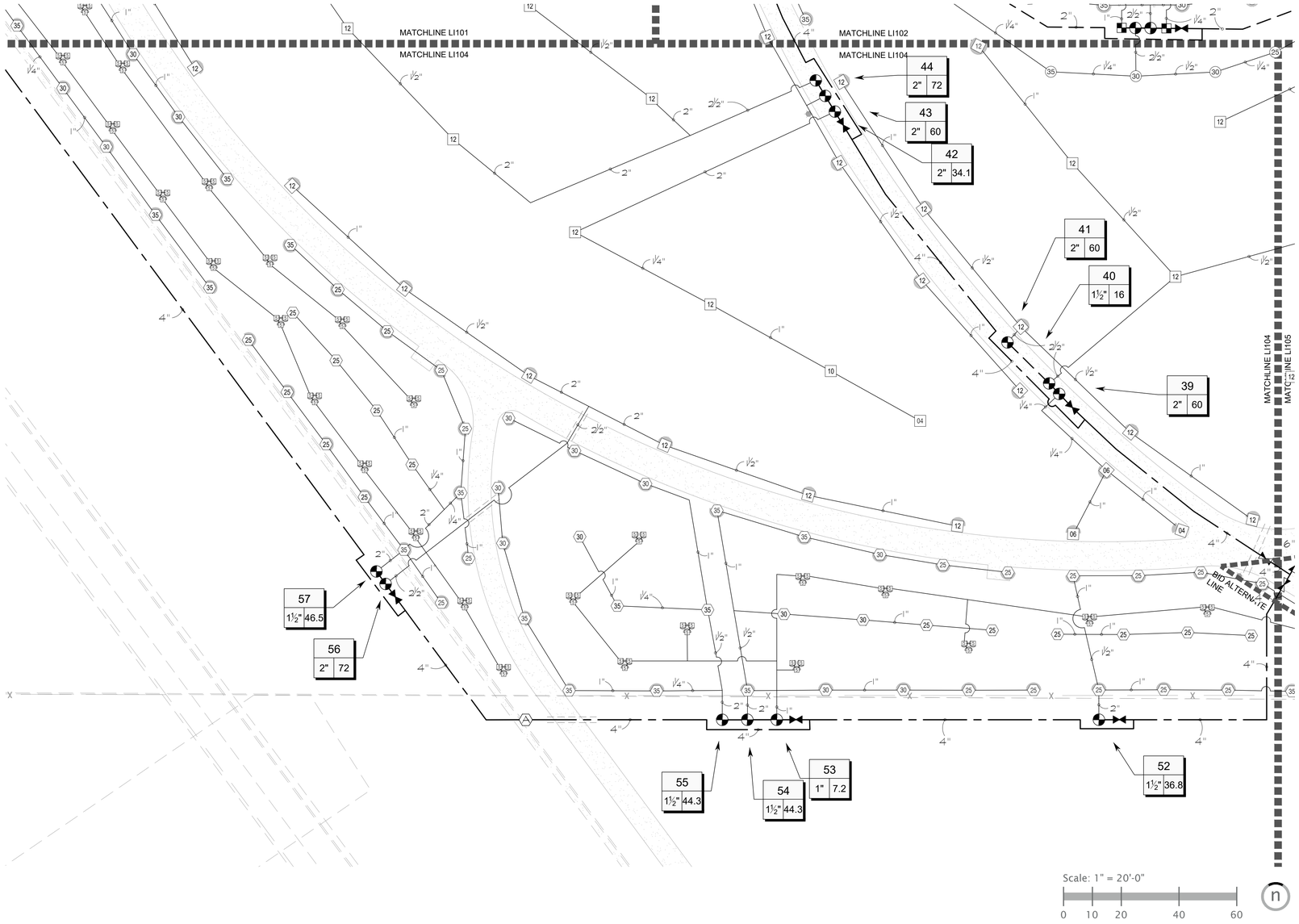

IRRIGATION SCHEDULE

SYMBOL	MANUFACTURER/MODEL	QTY
Q T H F	RAIN BIRD 1806-SAM-PRS30 *TURF SPRAY* 10 SERIES MPR	39
Q T H TQ F	RAIN BIRD 1806-SAM-PRS30 *TURF SPRAY* 12 SERIES MPR	8
Q H F	RAIN BIRD 1804-SAM-PRS30 *5H TREES ONLY* 5 SERIES MPR	435
T	HUNTER MP CORNER PROS-12-PRS40-CV	1
M L O	HUNTER MP1000 PROS-12-PRS40-CV	20
800 A 800 F	HUNTER MP800SR PROS-12-PRS40-CV	6

SYMBOL	MANUFACTURER/MODEL	QTY
25	RAIN BIRD 5006-PL-PC/FC-SAM-R-MPR *TURF* 25	7
30	RAIN BIRD 5006-PL-PC/FC-SAM-R-MPR *TURF* 30	54
35	RAIN BIRD 5006-PL-PC/FC-SAM-R-MPR *TURF* 35	17
04	RAIN BIRD 8005 *TURF ROTOR* 04	2
06	RAIN BIRD 8005 *TURF ROTOR* 06	2
10	RAIN BIRD 8005 *TURF ROTOR* 10	7
12	RAIN BIRD 8005 *TURF ROTOR* 12	78
25	RAIN BIRD 5012-PL-PC/FC-SAM-R-MPR *NATIVE* 25	52
30	RAIN BIRD 5012-PL-PC/FC-SAM-R-MPR *NATIVE* 30	35
35	RAIN BIRD 5012-PL-PC/FC-SAM-R-MPR *NATIVE* 35	77

SYMBOL	MANUFACTURER/MODEL/DESCRIPTION	QTY
	RAIN BIRD XCZ-100-PRB-COM DRIP CONTROL VALVE KIT	18
	PIPE TRANSITION POINT S/40 PVC TO DRIP TUBING	79
	HUNTER PLD-BV DRIP FLUSH VALVE	52
	HUNTER ECO-ID OPERATING INDICATOR	46
5.0 7.0 10.0	RAIN BIRD 1804-SAM-PA80-PCT LOW FLOW BUBBLER	45
	AREA TO RECEIVE DRIPLINE RAIN BIRD XFS-CV-06-12 *SHRUB AREAS* 0.6 GPH EMITTERS, AT 12" O/C SPACING IN TUBING. DRIPLINE LATERALS SPACED AT 24" APART.	19,608 L.F.
	AREA TO RECEIVE DRIPLINE RAIN BIRD XFS-CV-09-12 *SWITCH GRASS* 0.9 GPH EMITTERS AT 12" O/C IN TUBING. DRIPLINE LATERALS SPACED AT 12" APART.	2,407 L.F.

SYMBOL	MANUFACTURER/MODEL/DESCRIPTION	QTY
	RAIN BIRD PESB REMOTE CONTROL VALVE	51
	RAIN BIRD 44-NP QUICK COUPLER VALVE 1", TWO-PIECE. INCLUDE LASCO G213S-212 SNAP-LOK SWING JOINT.	4
	LEEMCO LGT-XXX-SS-304-W STAINLESS GATE VALVE LEEMCO STAINLESS STEEL GATE VALVE WITH WHEEL HANDLE. LINE SIZE.	3
	LEEMCO LMV-SB/BB-XX GATE VALVE	13
	LEEMCO LV-200 LATERAL VALVE W/ LT-XXX LATERAL TEE	24
	WEATHERTRAK WTF3-600-PD-NC 6" HYDROMETER 6"	1
	VALMATIC 1" 201C.2 CONBINATION AIR VALVE	3
	LEEMCO LCT-075-SS-316 3/4" DRAIN VALVE	3
	WEATHERTRAK WTOXR-C-H2O96-CWM CONTROLLER WALL MOUNT INCLUDE 5 ADDITIONAL YEARS SERVICE, AND 'SITE CONSULT' COMPLETE SYSTEM COMMISSIONING BY FACTORY TRAINED AND AUTHORIZED TECHNICIAN. CONTACT BRADY PITCHER OF SPRINKLER SUPPLY CO 801 592-6490.	1
	PAIGE WIRE 'V' GROUNDING GRID	1
FS	WEATHERTRAK WT2W-H2O-FS *FLOW SENSOR DECODER*	1
MV	WEATHERTRAK WT2W-H2O-MV *MASTER VALVE DECODER*	1
SA	WEATHERTRAK WT2W-H2O-SA *SURGE ARRESTOR*	2
	AMIAD FILTOMAT M108-LP 8" 130 MICRON FILTER PLANT	1
PRV	ZURN WILKINS PRV 8" FLANGED ZW209BP W LF BYPASS	1
POC	8" SECONDARY POINT OF CONNECTION MINIMUMS REQUIRED: 8", 700 GPM`S @ 110 PSI DYNAMIC. LESS THAN MINIMUMS MAY REQUIRE RE-DESIGN.	1
	IRRIGATION LATERAL LINE: PVC SCHEDULE 40 1-3", USE ONLY IPS WELD-ON P-70 PRIMER & 711 GLUE. ALL LATERAL FITTINGS PVC S/40.	20,996 L.F.
	IRRIGATION MAINLINE: PVC SCHEDULE 40 1-1/4 - 3" PIPE. S/80 FITTINGS, USE IPS WELD-ON P-70 PRIMER AND 711 GLUE FOR ALL JOINTS THROUGH 2"; USE LEEMCO JOINT RESTRAINT FITTINGS FOR 2-1/2" AND LARGER.	1,575 L.F.
	IRRIGATION MAINLINE: PVC CL/200 SDR 21 FOR SIZES 4" AND LARGER. USE LEEMCO DUCTILE IRON FITTINGS WITH JOINT RESTRAINTS.	3,693 L.F.
	PIPE SLEEVE: PVC S/40 USE SEPARATE SLEEVES FOR PIPE AND WIRING, WIRING SHALL BE IN GRAY ELECTRICAL CONDUIT. EXTEND 12" BEYOND EDGES OF PAVING OR CONSTRUCTION.	1,244 L.F.

Valve Callout

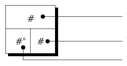

blu line designs
planning | landscape architecture | design
8719 S. Sandy Parkway
Sandy, UT 84070
p 801.913.7994

CLIENT

FARMINGTON CITY
CONTACT: SYLVIA CLARK
PH: 801.939.9295
EMAIL:
SCLARK@FARMINGTON.UTAH.GOV

FARMINGTON

IVY ACRES PARK

1397 WEST COOK LANE
FARMINGTON, UT

REVISIONS

NO	symmday	DESCRIPTION

Stamp

STATE OF UTAH
CORY A. SHUPE
6391201
Licensed Landscape Architect
03/06/2024

Designed By:	BP
Drawn By:	BP, TH
Date:	03/06/2024
Checked By:	CS
Project No:	22-246

Drawing Title

IRRIGATION PLAN

Drawing number

LI104

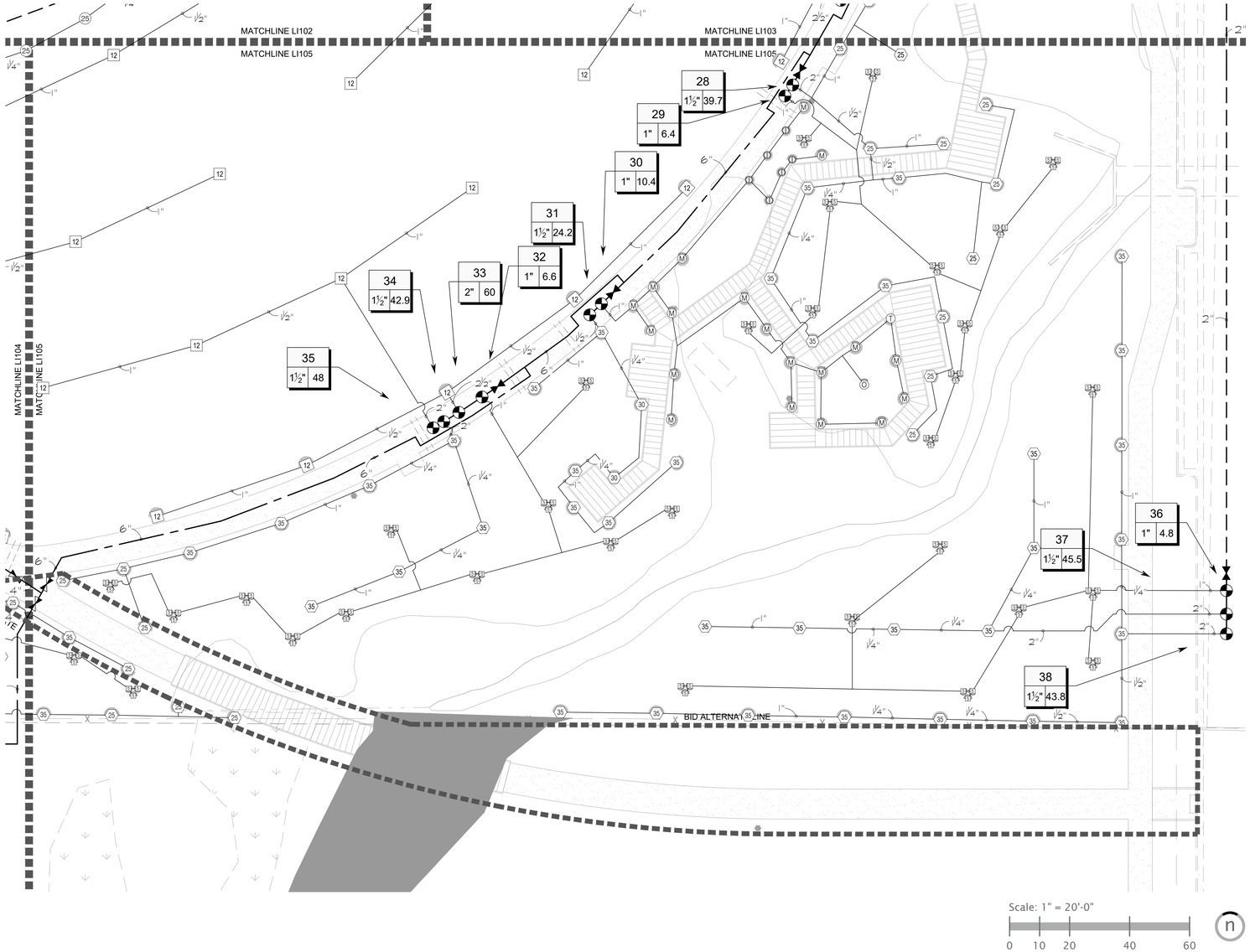

IRRIGATION SCHEDULE

SYMBOL	MANUFACTURER/MODEL	QTY
18 Q, 18 T, 18 H, 18 F	RAIN BIRD 1806-SAM-PRS30 *TURF SPRAY* 10 SERIES MPR	39
12 Q, 12 T, 12 H, 12 TQ, 12 F	RAIN BIRD 1806-SAM-PRS30 *TURF SPRAY* 12 SERIES MPR	8
13 Q, 13 H, 13 F	RAIN BIRD 1804-SAM-PRS30 *5H TREES ONLY* 5 SERIES MPR	435
T	HUNTER MP CORNER PROS-12-PRS40-CV	1
M, L, O	HUNTER MP1000 PROS-12-PRS40-CV	20
800 A, 800 F	HUNTER MP800SR PROS-12-PRS40-CV	6

SYMBOL	MANUFACTURER/MODEL	QTY
25	RAIN BIRD 5006-PL-PC/FC-SAM-R-MPR *TURF* 25	7
30	RAIN BIRD 5006-PL-PC/FC-SAM-R-MPR *TURF* 30	54
35	RAIN BIRD 5006-PL-PC/FC-SAM-R-MPR *TURF* 35	17
04	RAIN BIRD 8005 *TURF ROTOR* 04	2
06	RAIN BIRD 8005 *TURF ROTOR* 06	2
10	RAIN BIRD 8005 *TURF ROTOR* 10	7
12	RAIN BIRD 8005 *TURF ROTOR* 12	78
25	RAIN BIRD 5012-PL-PC/FC-SAM-R-MPR *NATIVE* 25	52
30	RAIN BIRD 5012-PL-PC/FC-SAM-R-MPR *NATIVE* 30	35
35	RAIN BIRD 5012-PL-PC/FC-SAM-R-MPR *NATIVE* 35	77

SYMBOL	MANUFACTURER/MODEL/DESCRIPTION	QTY
	RAIN BIRD XCZ-100-PRB-COM DRIP CONTROL VALVE KIT	18
	PIPE TRANSITION POINT S/40 PVC TO DRIP TUBING	79
	HUNTER PLD-BV DRIP FLUSH VALVE	52
	HUNTER ECO-ID OPERATING INDICATOR	46
5.0, 7.0, 10.0	RAIN BIRD 1804-SAM-PA80-PCT LOW FLOW BUBBLER	45
	AREA TO RECEIVE DRIPLINE RAIN BIRD XFS-CV-06-12 *SHRUB AREAS* 0.6 GPH EMITTERS, AT 12" O/C SPACING IN TUBING. DRIPLINE LATERALS SPACED AT 24" APART.	19,608 L.F.
	AREA TO RECEIVE DRIPLINE RAIN BIRD XFS-CV-09-12 *SWITCH GRASS* 0.9 GPH EMITTERS AT 12" O/C IN TUBING. DRIPLINE LATERALS SPACED AT 12" APART.	2,407 L.F.

SYMBOL	MANUFACTURER/MODEL/DESCRIPTION	QTY
	RAIN BIRD PESB REMOTE CONTROL VALVE	51
	RAIN BIRD 44-NP QUICK COUPLER VALVE 1", TWO-PIECE. INCLUDE LASCO G213S-212 SNAP-LOK SWING JOINT.	4
	LEEMCO LGT-XXX-SS-304-W STAINLESS GATE VALVE LEEMCO STAINLESS STEEL GATE VALVE WITH WHEEL HANDLE. LINE SIZE.	3
	LEEMCO LMV-SB/BB-XX GATE VALVE	13
	LEEMCO LV-200 LATERAL VALVE W/ LT-XXX LATERAL TEE	24
FLOW	WEATHERTRAK WTF3-600-PD-NC 6" HYDROMETER 6"	1
	VALMATIC 1" 201C.2 CONBINATION AIR VALVE	3
	LEEMCO LCT-075-SS-316 3/4" DRAIN VALVE	3
	WEATHERTRAK WTOXR-C-H2O96-CWM CONTROLLER WALL MOUNT INCLUDE 5 ADDITIONAL YEARS SERVICE, AND 'SITE CONSULT' COMPLETE SYSTEM COMMISSIONING BY FACTORY TRAINED AND AUTHORIZED TECHNICIAN. CONTACT BRADY PITCHER OF SPRINKLER SUPPLY CO 801 592-6490.	1
	PAIGE WIRE 'V' GROUNDING GRID	1
FS	WEATHERTRAK WT2W-H2O-FS *FLOW SENSOR DECODER*	1
MV	WEATHERTRAK WT2W-H2O-MV *MASTER VALVE DECODER*	1
SG	WEATHERTRAK WT2W-H2O-SA *SURGE ARRESTOR*	2
	AMIAD FILTOMAT M108-LP 8" 130 MICRON FILTER PLANT	1
PRV	ZURN WILKINS PRV 8" FLANGED ZW209BP W LF BYPASS	1
POC	8" SECONDARY POINT OF CONNECTION MINIMUMS REQUIRED: 8", 700 GPM`S @ 110 PSI DYNAMIC. LESS THAN MINIMUMS MAY REQUIRE RE-DESIGN.	1
	IRRIGATION LATERAL LINE: PVC SCHEDULE 40 1-3". USE ONLY IPS WELD-ON P-70 PRIMER & 711 GLUE. ALL LATERAL FITTINGS PVC S/40.	20,996 L.F.
	IRRIGATION MAINLINE: PVC SCHEDULE 40 1-1/4 - 3" PIPE. S/80 FITTINGS, USE IPS WELD-ON P-70 PRIMER AND 711 GLUE FOR ALL JOINTS THROUGH 2"; USE LEEMCO JOINT RESTRAINT FITTINGS FOR 2-1/2" AND LARGER.	1,575 L.F.
	IRRIGATION MAINLINE: PVC CL/200 SDR 21 FOR SIZES 4" AND LARGER. USE LEEMCO DUCTILE IRON FITTINGS WITH JOINT RESTRAINTS.	3,693 L.F.
	PIPE SLEEVE: PVC S/40 USE SEPARATE SLEEVES FOR PIPE AND WIRING, WIRING SHALL BE IN GRAY ELECTRICAL CONDUIT. EXTEND 12" BEYOND EDGES OF PAVING OR CONSTRUCTION.	1,244 L.F.

Valve Callout



blu line designs
planning | landscape architecture | design
8719 S. Sandy Parkway
Sandy, UT 84070
p 801.913.7994

CLIENT

FARMINGTON CITY
CONTACT: SYLVIA CLARK
PH: 801.939.9295
EMAIL:
SCLARK@FARMINGTON.UTAH.GOV

FARMINGTON

IVY ACRES PARK

1397 WEST COOK LANE
FARMINGTON, UT

REVISIONS

NO.	yy/mm/dd	DESCRIPTION

Stamp



03/06/2024

Designed By:	BP
Drawn By:	BP, TH
Date:	03/06/2024
Checked By:	CS
Project No:	22-246

Drawing Title

IRRIGATION PLAN

Drawing number

LI105

IRRIGATION SCHEDULE

SYMBOL	MANUFACTURER/MODEL	QTY
10 10 10 10 (Q T H F)	RAIN BIRD 1806-SAM-PRS30 *TURF SPRAY* 10 SERIES MPR	39
12 12 12 12 12 (Q T H TQ F)	RAIN BIRD 1806-SAM-PRS30 *TURF SPRAY* 12 SERIES MPR	8
5 5 5 (Q H F)	RAIN BIRD 1804-SAM-PRS30 *5H TREES ONLY* 5 SERIES MPR	435
T	HUNTER MP CORNER PROS-12-PRS40-CV	1
M L O	HUNTER MP1000 PROS-12-PRS40-CV	20
800 A 800 F	HUNTER MP800SR PROS-12-PRS40-CV	6

SYMBOL	MANUFACTURER/MODEL	QTY
25	RAIN BIRD 5006-PL-PC/FC-SAM-R-MPR *TURF* 25	7
30	RAIN BIRD 5006-PL-PC/FC-SAM-R-MPR *TURF* 30	54
35	RAIN BIRD 5006-PL-PC/FC-SAM-R-MPR *TURF* 35	17
04	RAIN BIRD 8005 *TURF ROTOR* 04	2
06	RAIN BIRD 8005 *TURF ROTOR* 06	2
10	RAIN BIRD 8005 *TURF ROTOR* 10	7
12	RAIN BIRD 8005 *TURF ROTOR* 12	78
25	RAIN BIRD 5012-PL-PC/FC-SAM-R-MPR *NATIVE* 25	52
30	RAIN BIRD 5012-PL-PC/FC-SAM-R-MPR *NATIVE* 30	35
35	RAIN BIRD 5012-PL-PC/FC-SAM-R-MPR *NATIVE* 35	77

SYMBOL	MANUFACTURER/MODEL/DESCRIPTION	QTY
	RAIN BIRD XCZ-100-PRB-COM DRIP CONTROL VALVE KIT	18
	PIPE TRANSITION POINT S/40 PVC TO DRIP TUBING	79
	HUNTER PLD-BV DRIP FLUSH VALVE	52
id	HUNTER ECO-ID OPERATING INDICATOR	46
5.0 7.0 10.0	RAIN BIRD 1804-SAM-PA80-PCT LOW FLOW BUBBLER	45
	AREA TO RECEIVE DRIPLINE RAIN BIRD XFS-CV-06-12 *SHRUB AREAS* 0.6 GPH EMITTERS, AT 12" O/C SPACING IN TUBING. DRIPLINE LATERALS SPACED AT 24" APART.	19,608 L.F.
	AREA TO RECEIVE DRIPLINE RAIN BIRD XFS-CV-09-12 *SWITCH GRASS* 0.9 GPH EMITTERS AT 12" O/C IN TUBING. DRIPLINE LATERALS SPACED AT 12" APART.	2,407 L.F.

SYMBOL	MANUFACTURER/MODEL/DESCRIPTION	QTY
	RAIN BIRD PESB REMOTE CONTROL VALVE	51
	RAIN BIRD 44-NP QUICK COUPLER VALVE 1", TWO-PIECE. INCLUDE LASCO G213S-212 SNAP-LOK SWING JOINT.	4
	LEEMCO LGT-XXX-SS-304-W STAINLESS GATE VALVE LEEMCO STAINLESS STEEL GATE VALVE WITH WHEEL HANDLE. LINE SIZE.	3
	LEEMCO LMV-SB/BB-XX GATE VALVE	13
	LEEMCO LV-200 LATERAL VALVE W/ LT-XXX LATERAL TEE	24
hyd	WEATHERTRAK WTF3-600-PD-NC 6" HYDROMETER 6"	1
A	VALMATIC 1" 201C.2 CONBINATION AIR VALVE	3
D	LEEMCO LCT-075-SS-316 3/4" DRAIN VALVE	3
A	WEATHERTRAK WTOXR-C-H2O96-CWM CONTROLLER WALL MOUNT INCLUDE 5 ADDITIONAL YEARS SERVICE, AND 'SITE CONSULT' COMPLETE SYSTEM COMMISSIONING BY FACTORY TRAINED AND AUTHORIZED TECHNICIAN. CONTACT BRADY PITCHER OF SPRINKLER SUPPLY CO 801 592-6490.	1
	PAIGE WIRE 'V' GROUNDING GRID	1
fs	WEATHERTRAK WT2W-H2O-FS *FLOW SENSOR DECODER*	1
mv	WEATHERTRAK WT2W-H2O-MV *MASTER VALVE DECODER*	1
sa	WEATHERTRAK WT2W-H2O-SA *SURGE ARRESTOR*	2
F	AMIAD FILTOMAT M108-LP 8" 130 MICRON FILTER PLANT	1
prv	ZURN WILKINS PRV 8" FLANGED ZW209BP W LF BYPASS	1
POC	8" SECONDARY POINT OF CONNECTION MINIMUMS REQUIRED: 8", 700 GPM`S @ 110 PSI DYNAMIC. LESS THAN MINIMUMS MAY REQUIRE RE-DESIGN.	1
	IRRIGATION LATERAL LINE: PVC SCHEDULE 40 1-3". USE ONLY IPS WELD-ON P-70 PRIMER & 711 GLUE. ALL LATERAL FITTINGS PVC S/40.	20,996 L.F.
	IRRIGATION MAINLINE: PVC SCHEDULE 40 1-1/4 - 3" PIPE. S/80 FITTINGS, USE IPS WELD-ON P-70 PRIMER AND 711 GLUE FOR ALL JOINTS THROUGH 2"; USE LEEMCO JOINT RESTRAINT FITTINGS FOR 2-1/2" AND LARGER.	1,575 L.F.
	IRRIGATION MAINLINE: PVC CL/200 SDR 21 FOR SIZES 4" AND LARGER. USE LEEMCO DUCTILE IRON FITTINGS WITH JOINT RESTRAINTS.	3,693 L.F.
	PIPE SLEEVE: PVC S/40 USE SEPARATE SLEEVES FOR PIPE AND WIRING, WIRING SHALL BE IN GRAY ELECTRICAL CONDUIT. EXTEND 12" BEYOND EDGES OF PAVING OR CONSTRUCTION.	1,244 L.F.

Valve Callout

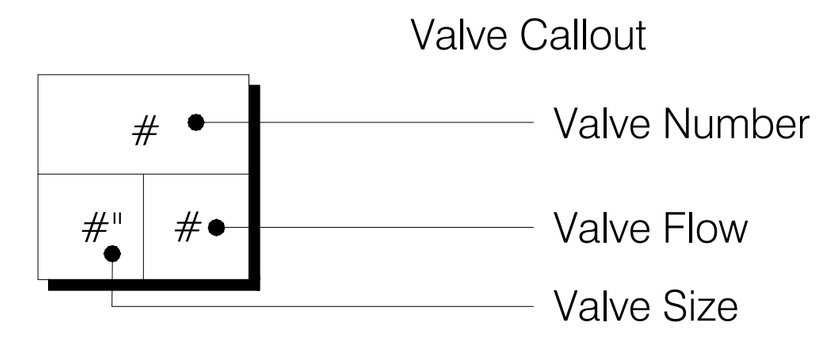

CRITICAL ANALYSIS

Generated: 2024-02-24 19:04

P.O.C. NUMBER: 01
Water Source Information:
Minimums Required: 8", 700 GPM`s @ 110 PSI
Dynamic. Less than minimums may require re-design.

FLOW AVAILABLE
Custom Max Flow: 700.00 GPM
Flow Available 700.00 GPM

PRESSURE AVAILABLE
Static Pressure at POC: 110.00 PSI
Pressure Available: 110.00 PSI

DESIGN ANALYSIS
Maximum Station Flow: 700.00 GPM
Flow Available at POC: 700.00 GPM
Residual Flow Available: 000.00 GPM

Critical Station: 58
Design Pressure: 60.00 PSI
Friction Loss: 02.00 PSI
Fittings Loss: 00.20 PSI
Elevation Loss: 02.00 PSI
Valve Loss: 04.50 PSI
Pressure Required at Critical Station: 51.30 PSI

Loss for Fittings: 01.72 PSI
Loss for Main Line: 17.22 PSI
Loss for POC to Valve Elevation: 05.00 PSI
Loss for Filter Plant: 01.40 PSI
Loss for Hydrometer: 04.10 PSI
Critical Station Pressure at POC: 51.30 PSI
Pressure Available: 110.00 PSI
Residual Pressure Available: 29.28 PSI

IRRIGATION NOTES

1. These Irrigation Notes are part of the irrigation Construction Documents package (hereafter referred to as CDs). Complete CDs shall include all of the following: Plan Drawings, Legend, Notes, Details and Specification Section. Contractor shall be responsible to obtain and be familiar with all components in the CD's package, all of which are necessary to correctly bid and build the irrigation system for this project.

2. Irrigation CD's are based on documents, plans or directions provided by others to the irrigation consultant.

3. The irrigation design is based on a minimum POC size, a minimum static pressure at each POC, and a minimum water volume at the POC. This design assumes a minimum of a 8" POC, @ 110 PSI dynamic, and 700 GPM. POC parameters were provided by the Owner. Actual site conditions may vary from these parameters. Site conditions which vary from the POC size, pressure or volume may render the installation non-operable and or may require re-design.

4. Irrigation design intent assumes a peak ET of 1.75" per week, that all of the irrigated area shall be watered in an 8 hour watering window, placing 1/2" of water per application, with a 4 day per week watering schedule.

5. Utility locations & depths, final grades, hard-scape features and or plantings may not be indicated within the irrigation CD's. Irrigation Contractor shall be responsible for review of other plans, and/or site verification of these items. Irrigation Contractor shall verify location of existing features or other site improvements that will affect or be affected by irrigation system installation. If any part of the CD's cannot be followed due to existing or proposed conditions contact the Owner Approved Representative (OAR) for instructions prior to commencing or proceeding with that work.

6. Contractor shall self-verify material counts and square footages. Any quantities shown in Irrigation Legend are provided as courtesy Owner information only. Shown plan quantities shall take precedence over any listed legend quantities. Contractor shall be responsible to provide the larger quantity indicated.

7. Contractor shall contact the local underground utility provider or locator services for utility location and identification 48 hours prior to any excavation on project site.

8. Perform excavation in the vicinity of underground utilities and existing buildings, features or hard-scapes with care; and if necessary, by hand. Contractor bears full responsibility for this work and disruption or damage shall be repaired immediately at no expense to the Owner.

9. Exact locations of major irrigation components and routing of main line and wiring to be approved by the OAR in the field prior to installation. Irrigation main line and/or other components are shown schematically on plan for graphic clarity only. All Irrigation components shall be located in landscaped areas.

10. Irrigation plans may show Isolation Valves and or Remote Control Valves (RCVs) in groups and locations. Contractor shall place RCVs in logical groupings and locations as field conditions permit. All remote control valves and quick coupler valves shall be isolated from the main line via a manifold isolation valve as shown in details.

11. Quick coupler valves in landscaped areas shall be installed as close as possible to plan locations. OAR may revise locations of quick couplers shown on plan.

12. Contractor shall be responsible to ensure all sleeves necessary for main line, wire and lateral line are installed as needed, prior to hard-scape features. Not all sleeving necessary to complete this project may be shown on plan. Portions of irrigation sleeves may have or may not have been previously installed by others. Coordinate location, installation and usage with General Contractor and or OAR.

13. Contractor shall be responsible to maintain existing landscape plant material serviced by existing irrigation system in a healthy manner. Contractor shall not have existing irrigation system disabled for more than 48 hours at any time. Upon disabling or demolishing existing irrigation, Contractor shall install new main and wires to restore operation in no more than 48 hours. Contractor shall be responsible to prevent debris from entering existing piping.

14. Final location and routing of irrigation main line and major components shall be approved by OAR, and Landscape Architect. Contractor shall perform layout of irrigation main line routing and major component locations, and make appointment at least 24 hours in advance of installation for approval. Work installed without approval is subject to rejection and replacement at Contractor expense.

15. Contractor shall not willfully proceed installation of the irrigation system when field conditions, unknown obstructions or grading differences may not have been obvious during engineering. Such issues or differences shall be brought to the attention of the OAR immediately and in writing. In the event prompt notification is not performed, Contractor may assume full responsibility for revisions required.

16. Contractor shall protect other trades work from damage, displacement or reinstallation from his work. Contractor shall be responsible for cost of restoring said work to original condition at his own expense should such damage occur.

17. Valve boxes and lids in brown/tan colored rock mulch areas shall be TAN in color. Valve boxes and lids in gray/black colored rock mulch areas shall be GRAY in color. Valve boxes and lids in bark mulch areas shall be TAN in color. Valve boxes and lids in turf and ground covered areas shall be Green in color. Valve boxes are to be evenly spaced from each other, parallel and perpendicular with paving and planting beds. Where possible, valve boxes shall be located 12-18" in from the edge of paving.

18. Grounding grid as shown in detail drawings shall be installed at Controller without exception.

19. See Detail drawings for additional information. Irrigation equipment not called out, explained, detailed within the CDs shall be installed per the manufacturers recommendations and specifications.

SUPPLEMENTAL 2-WIRE NOTES

1. All control valves shall be connected to control system via decoders. Single-station only decoders shall be used.

2. Only one valve per decoder, no decoders may be used to service more than one valve. Decoders must reside within the valve box of the valve served.

3. Master valve and flow sensor shall use conventional wiring, see specifications and detail drawings.

4. Decoder bodies shall be mounted to inside sidewall of valve box. Orient to allow access and operation.

5. Decoder wire, Master valve wire, Flow sensor wire shall be in 2" PVC Gray S/40 electrical conduit. Decoder wire only shall be in 1" PVC Gray S/40 electrical conduit.

6. Surge protection and grounding shall be installed per manufacturer's recommendations. At least one every 500' of decoder wire or 8 decoders whichever is less. Surge protection and grounding is also required at the controller and at the end of any dead end 2-wire run longer than 50'.

7. Ground rods shall be tested and show 10 oHms or less resistance. Proof of such shall be provided to the OAR. in writing.

8. Decoder wire entering the valve box shall be stripped to within 6" of the conduit opening. 3' of spare decoder wire shall be neatly coiled within the valve box. Conduit opening shall be filled with approved waterproof sealant. Supplemental wire from decoder to valve shall also be 3' in length and neatly coiled within the box.

9. For troubleshooting and repair purposes: Decoder wire shall be laid in a 'star' configuration as opposed to a 'looped' configuration.

10. Paige Wire 3M Decoder Cable Fuse Devices shall be installed in all junctions of the 2-wire path. Include spare wire within valve box.

blu line designs
planning | landscape architecture | design
8719 S. Sandy Parkway
Sandy, UT 84070
p 801.913.7994

CLIENT

FARMINGTON CITY
CONTACT: SYLVIA CLARK
PH: 801.939.9295
EMAIL:
SCLARK@FARMINGTON.UTAH.GOV

FARMINGTON

IVY ACRES PARK

1397 WEST COOK LANE
FARMINGTON, UT

REVISIONS

NO.	yy/mm/day	DESCRIPTION

Stamp

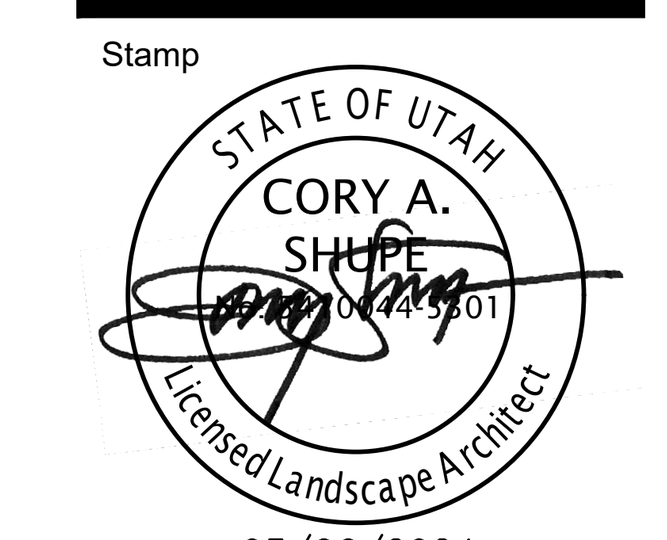

Designed By:	BP
Drawn By:	BP, TH
Date:	03/06/2024
Checked By:	CS
Project No:	22-246

Drawing Title

IRRIGATION NOTES

Drawing number

LI501

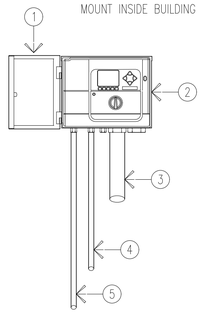

1. ALLOW FOR MINIMUM DOOR OPENING CLEARANCE ON LEFT SIDE OF CONTROLLER
2. CONTROLLER
3. CONTROL WIRE CONDUIT, UP TO 2" SIZE.
4. SUPPLEMENTAL GROUND WIRE CONDUIT
5. POWER SUPPLY CONDUIT J-BOX AT CONTROLLER CONNECT PER LOCAL CODE

*NOTE:
INCLUDE 10' OF ALL CONTROL WIRE WITHIN A MARKED VALVE BOX AT BASE OF CONTROLLER CONDUIT, AT EXTERIOR OF BUILDING. COIL NEATLY IN BOX.

A1 WALL MOUNT CONTROLLER

SCALE: NTS

SECTION DETAIL

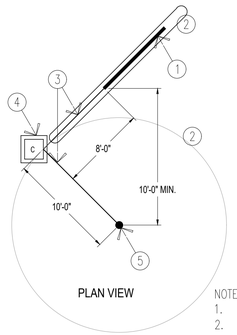

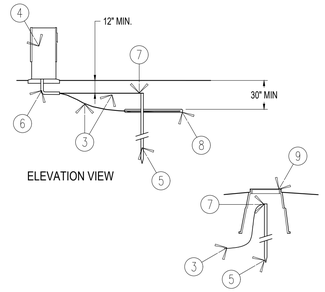

1. COPPER GROUND PLATE (4" X 96" X .0625")
2. ELECTRICAL SPHERE OF INFLUENCE BOUNDARIES
3. #6 AWG BARE COPPER WIRE
4. IRRIGATION CONTROLLER, SEE OTHER DETAILS
5. 5/8" X 10' UL LISTED COPPER CLAD GROUND ROD
6. PVC SWEEP ELL, 1-1/2" OR LARGER
7. 'CADWELD' CONNECTION
8. 'POWER SET' EARTH CONTACT MATERIAL
9. 10" ROUND VALVE BOX

NOTES:
1. DO NOT INSTALL ANY OTHER WIRES OR CABLE WITHIN THE SPHERE OF INFLUENCE AREA.
2. PLACE 100 LB POWER SET SOIL AMENDMENT WITH EACH PLATE PER MANUFACTURER'S RECOMMENDATIONS.
3. IF 'V' OPTION IS NOT AVAILABLE GROUND ROD AND PLATE CAN BE INSTALLED IN-LINE, ROD FIRST.

A2 GROUNDING GRID INSTALLATION

SCALE: NTS

LANDSCAPE & IRRIGATION DETAIL

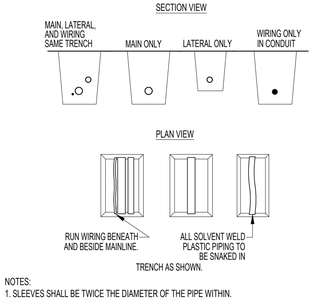

NOTES:
1. SLEEVES SHALL BE TWICE THE DIAMETER OF THE PIPE WITHIN.
2. PIPE AND WIRE SHALL BE PLACED IN SEPARATE SLEEVES.
3. MAIN LINE SHALL HAVE 18" COVER, LATERAL LINE SHALL HAVE 8-12" MIN. COVER.
4. ALL WIRING SHALL BE ENCLOSED IN CONDUIT. CONTROL WIRE, 2-WIRE, POWER WIRE.

B1 PIPE/WIRE IN TRENCH

SCALE: NTS

LANDSCAPE & IRRIGATION DETAIL

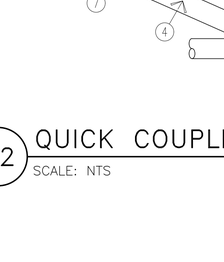

1. 4" MINIMUM CLEARANCE
2. FINISH GRADE
3. 18" MINIMUM, 24" MAXIMUM PIPE COVER
4. 6" MINIMUM, 18" MAXIMUM

SLEEVES TO BE 2X PIPE SIZE WITHIN. JOINTS TO BE WATERTIGHT. MECHANICALLY TAMP TO 95% PROCTOR.
ALL WIRE SLEEVING SHALL BE GRAY S/40 ELECTRICAL CONDUIT. NO EXCEPTIONS.

B2 SLEEVING

SCALE: NTS

LANDSCAPE & IRRIGATION DETAIL

1. FINISH GRADE
2. IRRICAP
3. CARSON BROOKS 10" ROUND BOX
4. 2" SCH 40 PIPE
5. 3/4" CURB STOP VALVE FORD B11-333M
6. MARLEX STREET ELL
7. 1 CU/FT 3/4" GRAVEL
8. 3/4" X 6" S/80 NIPPLE
9. 3/4" SCH 40 STREET ELL
10. MAIN LINE PIPE

C1 MANUAL DRAIN VALVE-SMALL

SCALE: NTS

SECTION DETAIL

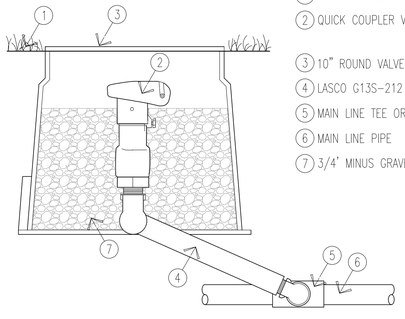

1. FINISH GRADE
2. QUICK COUPLER VALVE
3. 10" ROUND VALVE BOX
4. LASCO G13S-212 SWING JOINT
5. MAIN LINE TEE OR ELL
6. MAIN LINE PIPE
7. 3/4' MINUS GRAVEL

C2 QUICK COUPLER VALVE

SCALE: NTS

SECTION DETAIL

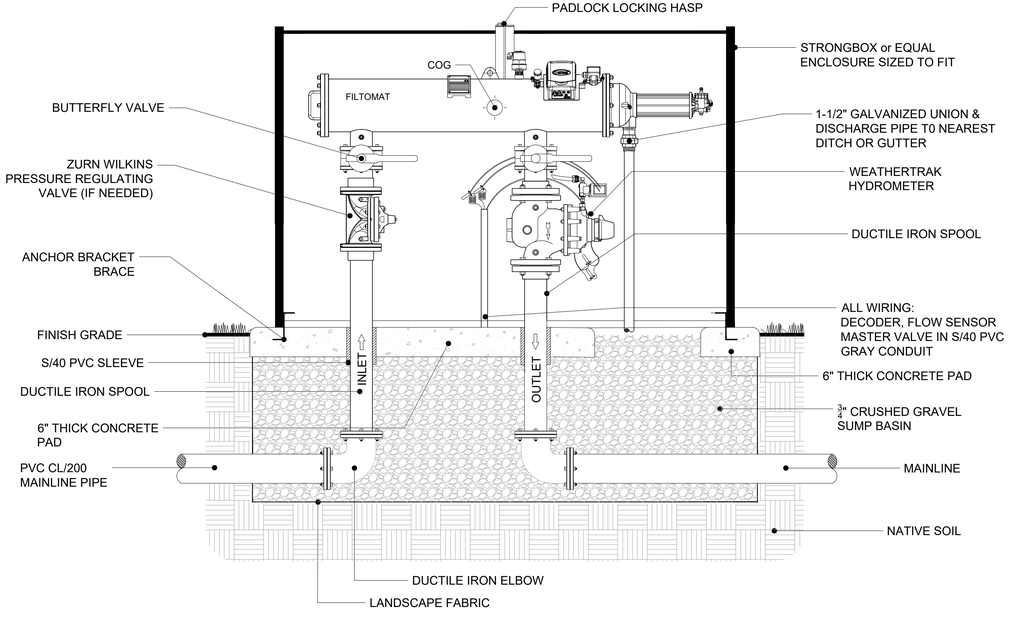

C3 FILTER, HYDROMETER, PRESSURE REGULATOR COMBINATION

SECTION DETAIL

blu line designs
planning | landscape architecture | design
8719 S. Sandy Parkway
Sandy, UT 84070
p 801.913.7994

CLIENT

FARMINGTON CITY
CONTACT: SYLVIA CLARK
PH: 801.939.9295
EMAIL:
SCLARK@FARMINGTON.UTAH.GOV

FARMINGTON

IVY ACRES PARK

1397 WEST COOK LANE
FARMINGTON, UT

REVISIONS

NO.	submitted by	DESCRIPTION

Stamp

STATE OF UTAH
CORY A. SHUPE
#13701
Licensed Landscape Architect
03/06/2024

Designed By:	BP
Drawn By:	BP, TH
Date:	03/06/2024
Checked By:	CS
Project No:	22-246

Drawing Title

IRRIGATION PLAN DETAILS

Drawing number

LI502

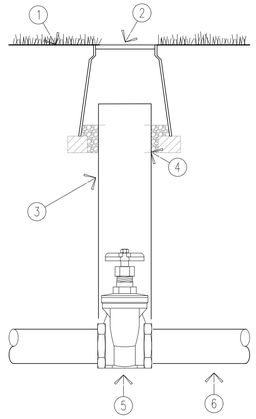

1. FINISH GRADE
2. 10" CARSON BROOKS ROUND VALVE BOX
3. 4" CL/200 SLEEVE
4. 3/4" WASHED GRAVEL
5. LEEMCO SS GATE VALVE
6. S/80 TOE NIPPLE

C4 SMALL ISOLATION/LINE VALVE

SCALE: NTS — SECTION DETAIL

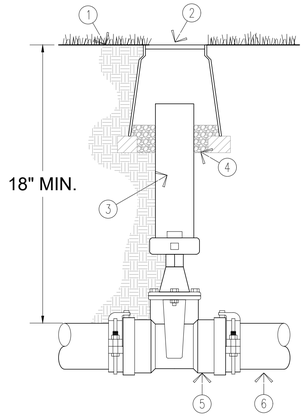

1. FINISH GRADE
2. 10" CARSON BROOKS ROUND VALVE BOX
3. 6" CL/200 SLEEVE
4. 3/4" WASHED GRAVEL
5. LEEMCO D/I R/W VALVE
6. MAIN LINE PIPE

C5 LARGE ISOLATION/LINE VALVE

SCALE: NTS — SECTION DETAIL

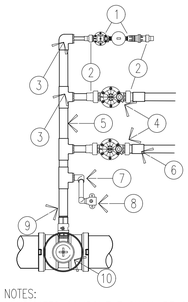

1. DRIP ZONE, JUMBO VALVE BOX
2. ACTION MANIFOLD FITTINGS
3. **S/80 FITTINGS
4. RCV IN CARSON STANDARD 1419 VALVE BOX
5. **S/40 MANIFOLD MAIN LINE
6. S/40 COUPLER OR BELL END
7. LASCO SNAPLOK SWING JOINT
8. QUICK COUPLER IN 10" ROUND BOX
9. **S/80 TOE NIPPLE
10. DUCTILE IRON LATERAL TEE & LATERAL VALVE. 10" ROUND BOX

NOTES:
**INDICATES COMPONENT SHALL BE SAME SIZE AS LARGEST LATERAL ON THIS MANIFOLD. DOWNSTREAM OF BALL VALVE: MANIFOLD FITTINGS SHALL BE S/80, PVC PIPE SHALL BE S/40.
QUICK COUPLERS ARE NOT REQUIRED AT EVERY MANIFOLD. SEE PLAN FOR LOCATIONS.

D1 VALVE MANIFOLD

SCALE: NTS — PLAN VIEW DETAIL

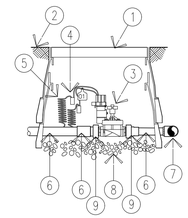

1. STANDARD VALVE BOX (ONE VALVE PER)
2. FINISH GRADE
3. REMOTE CONTROL VALVE
4. PAIGE WIRE CONNECTORS (2)
5. CONTROL WIRE (SEE OTHER DETAILS)
6. SCH 40 PIPE & FITTINGS
7. SCH 80 FITTINGS
8. 3/4" MINUS WASHED GRAVEL
9. ACTION MANIFOLD FITTINGS (2 EACH) 18011-X, 18012-X

D2 REMOTE CONTROL VALVE

SCALE: NTS — SECTION DETAIL

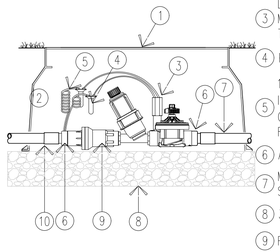

1. JUMBO VALVE BOX (ONE VALVE PER)
2. WRAP BOX IN DEWITT PRO 5, 4 BRICKS UNDERNEATH
3. DRIP ZONE KIT MODEL PER PLAN TIP FILTER 45 DEGREES
4. PAIGE WIRE CONNECTORS (2)
5. 14 AWG PE WIRE. PLACED INSIDE OF MIN 1-1/2" CONDUIT, 4" ABOVE BOX FLOOR
6. ACTION MANIFOLD FITTINGS
7. MAIN LINE PIPE, SCH 80 FITTINGS
8. 3/4" MINUS WASHED GRAVEL
9. REGULATOR: 25 or 40 PSI
10. LATERAL LINE PIPE, SCH 40 FITTINGS

D3 DRIP CONTROL ZONE

SCALE: NTS — SECTION DETAIL

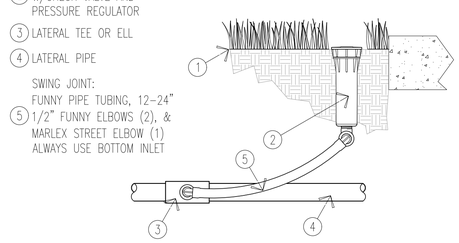

1. FINISH GRADE
2. POP-UP SPRAY HEAD W/CHECK VALVE AND PRESSURE REGULATOR
3. LATERAL TEE OR ELL
4. LATERAL PIPE
5. SWING JOINT: FUNNY PIPE TUBING, 12-24" 1/2" FUNNY ELBOWS (2), & MARLEX STREET ELBOW (1) ALWAYS USE BOTTOM INLET

E1 SPRAY HEAD

SCALE: NTS — SECTION DETAIL

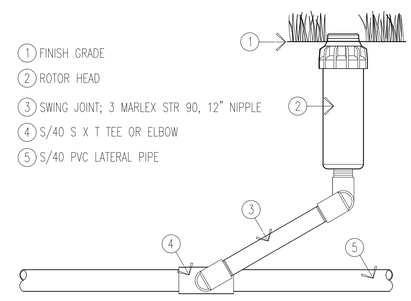

1. FINISH GRADE
2. ROTOR HEAD
3. SWING JOINT; 3 MARLEX STR 90, 12" NIPPLE
4. S/40 S X T TEE OR ELBOW
5. S/40 PVC LATERAL PIPE

E2 POP UP ROTOR HEAD

SCALE: 3" = 1'-0" — SECTION DETAIL

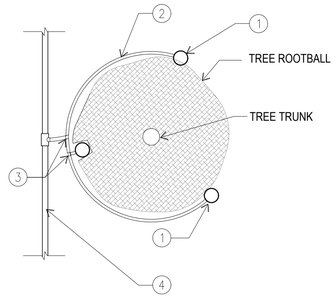

PLAN VIEW

1. 4" POP UP W/PRESSURE REGULATOR & CHECK VALVE THREE HEADS TOTAL
2. SWING PIPE ASSEMBLY, LENGTH AS NEEDED
3. FUNNY PIPE TEE
4. LATERAL PIPE

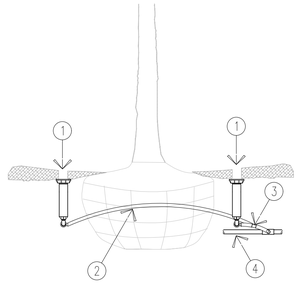

SECTION VIEW

E3 TREE HEAD LAYOUT

SCALE: NTS — DETAIL

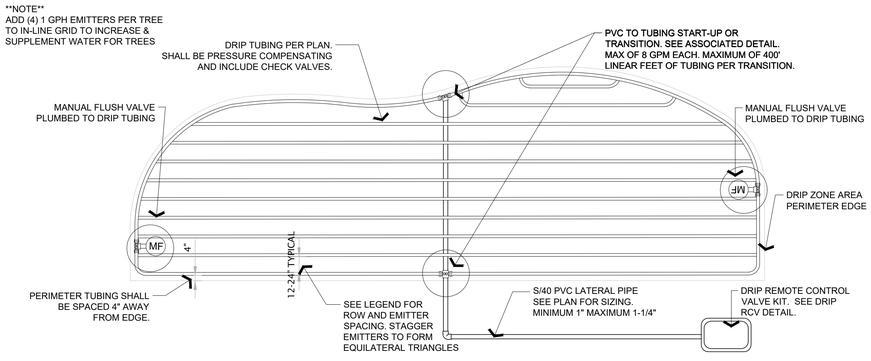

F1 IN-LINE TUBING LAYOUT

SCALE: NTS — SECTION DETAIL

blu line designs
planning | landscape architecture | design
8719 S. Sandy Parkway
Sandy, UT 84070
p 801.913.7994

CLIENT

FARMINGTON CITY
CONTACT: SYLVIA CLARK
PH: 801.939.9295
EMAIL: SCLARK@FARMINGTON.UTAH.GOV

FARMINGTON

IVY ACRES PARK

1397 WEST COOK LANE
FARMINGTON, UT

REVISIONS

NO.	submittal	DESCRIPTION

Stamp

STATE OF UTAH — CORY A. SHUPE — 7877801 — Licensed Landscape Architect

03/06/2024

Designed By:	BP
Drawn By:	BP, TH
Date:	03/06/2024
Checked By:	CS
Project No:	22-246

Drawing Title

IRRIGATION PLAN DETAILS

Drawing number

LI503

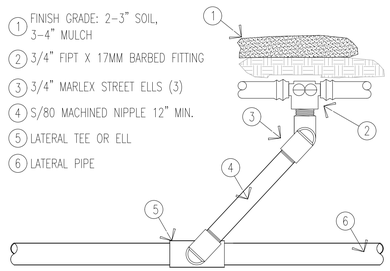

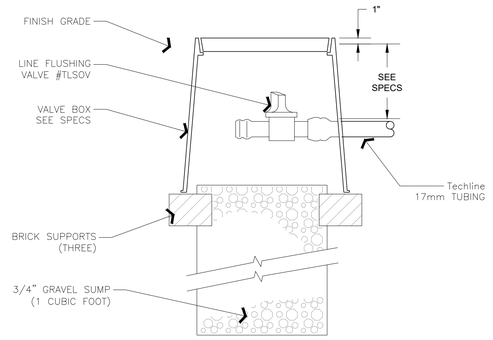

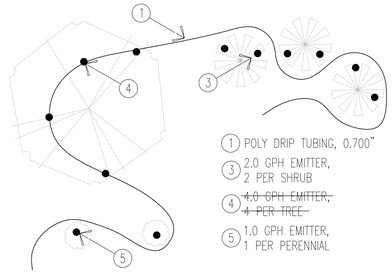

LOCATE EMITTER ON UPHILL SIDE OF PLANT ON SLOPES. BERM SOIL FOR WATER BASIN ON EACH PLANT.

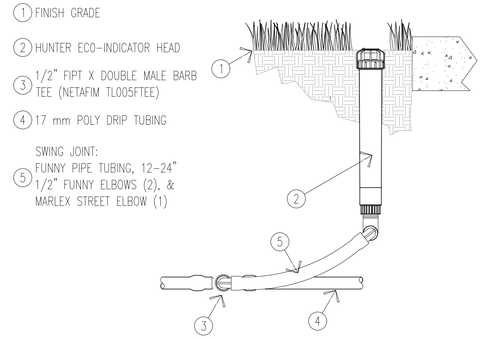

F2 PVC / DRIP TRANSITION POINT

SCALE: NTS

SECTION DETAIL

F3 MANUAL FLUSH/DRAIN VALVE

SCALE: NTS

SECTION DETAIL

F4 DRIP POINT SOURCE TUBING

SCALE: NTS

SECTION DETAIL

F5 DRIP OPERATING INDICATOR

SCALE: NTS

SECTION DETAIL

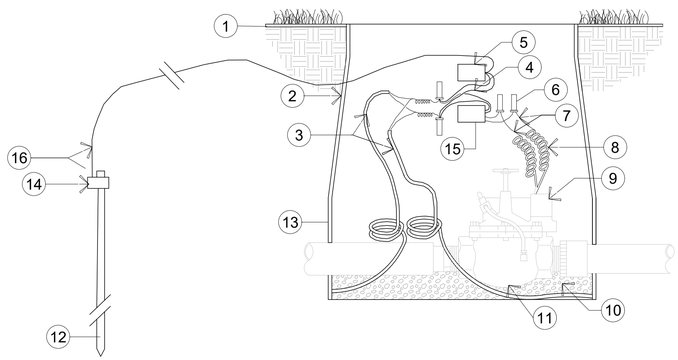

1. FINISH GRADE
2. VALVE BOX
3. 2-WIRE COMMUNICATION PATH "IN CONDUIT"
4. BLUE WIRES TO 2-WIRE COMMUNICATION PATH
5. WT2W-LSP SURGE ARRESTOR (YELLOW CASE)
6. 3M DBR/Y-6 SPLICE
7. WHITE WIRES TO SOLENOID
8. EXPANSION COILS
9. SOLENOID
10. GRAVEL
11. ELECTRIC VALVE (SEE OTHER DETAIL)
12. 5/8" DIA. X 8' COPPER CLAD GROUND ROD DRIVEN INTO GROUND WITH TOP OF ROD A MIN. OF 6" BELOW GRADE. 50 OHMS OR LESS. LOCATE PER WEATHERTRAK REQ'S.
13. EXTENSION (LENGTH AS REQUIRED)
14. CAD WELD CONNECTION
15. WT2W-SVD-11 DECODER (BLUE CASE)
16. GROUND WIRE OF WT2W-LSP CONNECTED TO GROUND ROD.

G1 2-WIRE DECODER, SURGE PROTECTOR, GROUNDING

SCALE: NTS

LANDSCAPE & IRRIGATION DETAIL

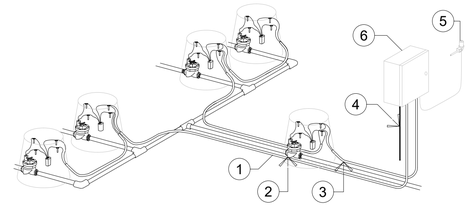

NOTES:
A. ALL WIRE SPLICING SHALL BE MADE WITH APPROVED CONNECTIONS.
B. MAKE ALL WIRE SPLICES IN VALVE BOXES.
C. LEAVE A MINIMUM OF 12" EXTRA WIRE AT ALL SPLICE POINTS.
D. MAXIMUM DISTANCE FROM DECODER TO VALVE = 150 FT.
E. MAXIMUM WIRE LENGTH = 10,200 FT.
F. WIRE LENGTHS INCLUDE MASTER VALVE AND #12 WIRE
G. INCLUDE PAIGE WIRE 'DECODER CABLE FUSE DEVICES' (DCFD's) AT ALL INTERSECTIONS.
H. REFER TO OTHER DETAILS FOR SURGE PROTECTION

1. WIRE PATH #1
2. MASTER VALVE
3. WIRE PATH #2
4. 120 VAC POWER
5. RAIN SENSOR
6. CONTROLLER SHOWN AS REFERENCE ONLY

NUMBER OF SIMULTANEOUS VALVES	VALVES EVENLY DISTRIBUTED ALONG 2-WIRE (FT)		
	AWG 18	AWG 16	AWG 14
1	7.000	11.000	17.800
2	6.400	10.200	16.300
3	5.500	8.800	14.100
4	4.900	7.800	12.500
5	4.400	7.000	11.200
6	4.000	6.300	10.100
7	3.600	5.800	9.200
8	3.300	5.300	8.500

WORST CASE 2-WIRE PATH LENGTH LIMITS WITH ALL DECODERS AT END OF 2-WIRE PATH	
NUMBER OF ACTIVE VALVES ON 2-WIRE PATH	MAXIMUM WIRE LENGTH (FT) ASSUMING #12 WIRE
1	6,200
2	5,600
3	4,900
4	4,300

G2 2-WIRE MULTIPE PATH EXAMPLE

SCALE: NTS

LANDSCAPE & IRRIGATION

DISTANCE CHART

REFER TO THE FOLLOWING TABLE THAT LISTS THE LENGTH (IN FEET) FOR EACH SIZE/TYPE FITTING WITHIN WHICH ALL JOINTS JUST BE RESTRAINED. ALL FITTINGS AND JOINT RESTRAINTS SHALL BE INSTALLED PER MANUFACTURERS RECOMMENDATIONS & SPECIFICATIONS.

AS AN EXAMPLE, IF YOU ARE INSTALLING A 3" MAINLINE WITH A DIRECTIONAL CHANGE OF 90°, REFER TO CHART UNDER PIPE SIZE TO 3" AND UNDER BENDS 90 YOU WILL SEE THE DISTANCE OF 11'. IF THERE IS ANY JOINT (VALVE, BELL, ETC.) YOU MUST INSTALL A JOINT RESTRAINT WITHIN 11' OF THE 90° MAINLINE DIRECTIONAL CHANGE.

PIPE SIZE	BENDS				REDUCERS			DEAD END	
	11°	22° 45°	90°	1 STEP	2 STEP	3 STEP	BLIND	SERV. B.
2"	1'	1'	2'	6'	-	-	-	19'	6'
2.5"	1'	2'	4'	9'	4'	-	-	23'	10'
3"	2'	3'	6'	11'	8'	10'	-	30'	15'
4"	2'	4'	9'	20'	14'	20'	31'	45'	25'
6"	3'	6'	13'	29'	30'	40'	53'	63'	40'
8"	4'	8'	15	38'	33'	55'	63'	75'	70'
10"	5'	9'	19'	45'	36'	56'	75'	96'	90'
12"	5'	10'	21'	53'	38'	60'	83'	112'	110'

THESE CHARTS ARE BASED ON USE OF LEEMCO PRODUCTS, AND PROVIDED AS REFERENCE ONLY. CONTRACTOR SHALL CONTACT CORRESPONDING MANUFACTURER REPRESENTATIVE FOR PROPER CHARTS, TRAINING AND CERTIFICATION IF OTHER PRODUCTS ARE SUBMITTED AND APPROVED. FOR USE OF LEEMCO PRODUCTS, CONTACT TONY GARNER @ (208) 631-7787, THE LEEMCO REPRESENTATIVE, FOR ALL QUESTIONS CONCERNING LEEMCO PRODUCTS.

INSTALLATION CHART

REFER TO THE FOLLOWING TABLE WHICH LISTS THE NUMBER OF BOLTS, SIZE, AND TORQUE FOR EACH BOLT IN REFERENCE TO THE SIZE OF PIPE WHICH IS BEING RESTRAINED.

AS AN EXAMPLE, IF YOU HAVE A 3" PIPE, YOU WILL NEED 2 BOLTS THAT ARE 3/8 X 2.5" AND TIGHTEN THEM WITH A TORQUE WRENCH TO 20 FT-LBS.

PIPE SIZE	NO. BOLTS	BOLT SIZE	TORQUE FT-LBS.
2"	2	3/8" x 2.5"	20
2.5"	2	3/8" x 2.5"	20
3"	2	3/8" x 2.5"	20
4"	2	1/2" x 3"	50
6"	2	1/2" x 3.5"	50
8"	4	1/2" x 4"	50
10"	4	5/8" x 5.5"	100
12"	4	5/8" x 5.5"	100

H1 JOINT RESTRAINT TABLES

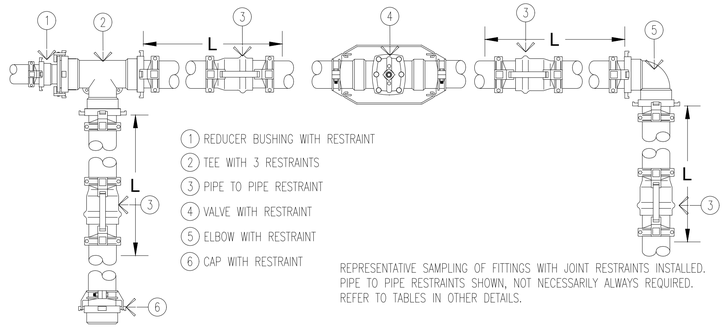

1. REDUCER BUSHING WITH RESTRAINT
2. TEE WITH 3 RESTRAINTS
3. PIPE TO PIPE RESTRAINT
4. VALVE WITH RESTRAINT
5. ELBOW WITH RESTRAINT
6. CAP WITH RESTRAINT

REPRESENTATIVE SAMPLING OF FITTINGS WITH JOINT RESTRAINTS INSTALLED. PIPE TO PIPE RESTRAINTS SHOWN, NOT NECESSARILY ALWAYS REQUIRED. REFER TO TABLES IN OTHER DETAILS.

H2 TYPICAL JOINT RESTRAINT LAYOUT (2-1/2" & LARGER)

SCALE: NTS

PLAN VIEW DETAIL

blu line designs
planning | landscape architecture | design
8719 S. Sandy Parkway
Sandy, UT 84070
p 801.913.7994

CLIENT

FARMINGTON CITY
CONTACT: SYLVIA CLARK
PH: 801.939.9295
EMAIL:
SCLARK@FARMINGTON.UTAH.GOV

FARMINGTON

IVY ACRES PARK

1397 WEST COOK LANE
FARMINGTON, UT

REVISIONS

NO.	DESCRIPTION

Stamp

STATE OF UTAH
CORY A. SHUPE
License No. 11901
Licensed Landscape Architect
03/06/2024

Designed By:	BP
Drawn By:	BP, TH
Date:	03/06/2024
Checked By:	CS
Project No:	22-246

Drawing Title

IRRIGATION PLAN DETAILS

Drawing number

LI504