ABILITY INCLUSION SERVICES

PERMIT SET

3/19/2025

PROJECT NOTES

OCCUPANCY OF THIS PROJECT IS PROHIBITED UNTIL A FINAL INSPECTION IS CONDUCTED BY THE STATE FIRE MARSHALS OFFICE.

ON-SITE INSPECTIONS AND EVALUATIONS DURING THE COURSE OF CONSTRUCTION THAT ARE RELATED TO FIRE PROTECTION, SAFETY OR LIFE SAFETY CONCERNS AS DEFINED IN ADOPTED FIRE CODES AND STANDARDS ARE TO BE ADMINISTERED BY STATE FIRE MARSHAL. A FIRE CLEARANCE REQUIRED BY THE ADOPTED FIRE CODE IS TO BE ADMINISTERED BY STATE FIRE MARSHAL.

SPECIAL INSPECTIONS

DESCRIPTION (AS REQUIRED BY CODE, INCLUDING:)

1. PLUMB., MECH., ELECT. & CEILING GRID SEISMIC CONTROL.
2. REFER TO SHEET SH-S-0.2, SH-S-0.3, HH-S-0.2, HH-S-0.3 FOR STRUCTURAL SPECIAL INSPECTION REQUIREMENTS.

1. SPECIAL INSPECTORS SHALL:
BE APPROVED BY THE BUILDING OFFICIAL PRIOR TO PERFORMING ANY DUTIES
2. PROVIDE PROOF OF LICENSURE AS A SPECIAL INSPECTOR BY THE STATE OF UTAH FOR EACH TYPE OF INSPECTION.
3. INSPECTION REPORTS ARE TO MEET THE REQUIREMENTS OF THE IBC 1704.1.2.
4. INSPECTION REPORTS ARE TO BE SUBMITTED TO THE CODE CONSULTANT, ARCHITECTS AND THE CITY BUILDING OFFICIAL WITHIN 48 HRS. OF PERFORMING THE INSPECTIONS.
5. A FINAL INSPECTION REPORT SHALL BE SUBMITTED FOLLOWING THE COMPLETION OF THE PROJECT, DOCUMENTING THE TYPES OF SPECIAL INSPECTIONS PERFORMED AND A STATEMENT INDICATING THAT THE STRUCTURE IS IN COMPLIANCE WITH THE APPROVED CONSTRUCTION DOCUMENTS AND APPLICABLE CODES (SEE IBC 1704.1.2)

ABBREVIATIONS LEGEND

A		**F**		**M**		**S**	
ADJ	ADJUSTABLE	FEC	FIRE EXTINGUISHER CAB	MAT'L	MATERIAL	SHT	SHEET
AFF	ABOVE FINISH FLOOR	FD	FLOOR DRAIN	MAX	MAXIMUM	SHTG	SHEATHING
AL.	ALUMINUM	FF	FINISH FLOOR	MECH	MECHANICAL	SIM	SIMILAR
A.B.	ANCHOR BOLT	FTG	FOOTING	MIN	MINIMUM	SGL	SINGLE
&	AND	FDN	FOUNDATION	MISC	MISCELLANEOUS	SC	SOLID CORE
L	ANGLE	FS	FINISH			SPEC	SPECIFICATION
@	AT			**N**		SQ	SQUARE
		G		NOM	NOMINAL	SS	STAINLESS STEEL
B		GI	GALVANIZED IRON	NIC	NOT IN CONTRACT	STD	STANDARD
BLKG	BLOCKING	GA	GAUGE	NO	NUMBER	STG	STORAGE
BLDG	BUILDING	GYP BD	GYPSUM BOARD	#	NUMBER		
						T	
C		**H**		**O**		TYP	TYPICAL
CAB	CABINET	HOR	HORIZONTAL	O/C	ON CENTER	T.O.B.	TOP OF BEAM
CLG	CEILING	HM	HOLLOW METAL	O.C.	ON CENTER	T.O.W.	TOP OF WALL
CL	CENTER LINE	HR	HOUR	OPNG	OPENING	T.O.D.	TOP OF DECK
C	CHANNEL			OD	OUTSIDE DIAMETER	T.O.C.	TOP OF CONCRETE
COL	COLUMN	**I**		OH	OVERHEAD		
CONC	CONCRETE	IBC	INTERNATIONAL BUILDING CODE	O.P.C.I	OWNER PROVIDED, CONTRACTOR INSTALLED	**U**	
CONT	CONTINUOUS	ID	INSIDE DIAMETER			U.N.O.	UNLESS NOTED ORTHERWISE
CMP	CORRUGATED METAL PIPE	INSUL	INSULATION	**P**			
				PLYWD	PLYWOOD	**V**	
D		**J**		PLF	POUNDS PER LINEAL FOOT	VER	VERTICAL
DIA	DIAMETER	JST	JOIST	PSF	POUNDS PER SQUARE FOOT		
DBL	DOUBLE			PSI	POUNDS PER SQUARE INCH	**W**	
DB	DECK BEARING	**L**				W/	WITH
		LAV	LAVATORY	**R**		WD	WOOD
E				REINF	REINFORCEMENT		
EA	EACH			REQ'D	REQUIRED		
ELEC	ELECTRICAL						
ELEV	ELEVATION						

SYMBOLS LEGEND

- INTERIOR ELEVATION (1 Ref / Ref 1 AE101 Ref / 1 Ref)
- BUILDING ELEVATION (XX / XXXX)
- BUILDING SECTION (XX / XXXX)
- WALL SECTION (XX / XXXX)
- DETAIL CALLOUT (XX / XXXX)
- CALLOUT (XX / XXXX)
- KEYNOTE (?)
- DOOR TAGS (XXXX X)
- WALL TYPE (XX)
- ROOM TAG (ROOM NAME / XXX)
- GLASS TYPE (A)
- ELEVATION MARKER
- WINDOW TYPE (DSF31)
- CENTER LINE
- GRID (0)
- NORTH ARROW (N)
- CEILING TYPE (1t / 10' - 0")
- FINISHES (ROOM NAME / XXX / F B W / BASE FINISH / FLOOR FINISH / WALL FINISH)
- MATERIAL TAG (XXX)

MATERIAL LEGEND

- CONCRETE
- MASONRY
- STEEL
- BATT INSULATION
- RIGID INSULATION
- FINISH GRADE WOOD / HARDWOOD
- PLYWOOD
- SPRAY FOAM INSULATION
- DEMOLITION, SHOWN VIA HIDDEN LINE
- WOOD STUD



DEFERRED SUBMITTALS - ENGINEERING

1. DEFERRED SUBMITTALS ARE ITEMS THAT ARE NOT PART OF OUR SCOPE WHICH REQUIRE ARCHITECTURAL AND/OR ENGINEERING REVIEW. DEFERRED SUBMITTALS INCLUDE PLANS, DETAILS, CALCULATIONS AND/OR OTHER RELEVANT DESIGN INFORMATION STAMPED BY A PROFESSIONAL ENGINEER LICENSED IN THE STATE IN WHICH CONSTRUCTION WILL OCCUR.
2. DEFERRED SUBMITTALS SHALL FIRST BE SUBMITTED TO THE PROJECT ARCHITECT AND/OR ENGINEER FOR REVIEW AND COORDINATION. UPON COMPLETION OF THE ARCHITECT/ENGINEER REVIEW, THE ARCHITECT/ENGINEER WILL PERFORMED AND THAT THE PLANS AND CALCULATIONS FOR THE DEFERRED SUBMITTAL ITEMS ARE FOUND TO BE IN GENERAL CONFORMANCE WITH THE DESIGN DRAWINGS WITH NO EXCEPTIONS.
3. CONSTRUCTION RELATED TO DEFERRED SUBMITTALS SHALL NOT COMMENCE UNTIL THE BUILDING OFFICIAL HAS APPROVED THE SUBMITTAL. APPROVED DEFERRED SUBMITTALS SHALL BE AVAILABLE AT THE JOBSITE THROUGHOUT CONSTRUCTION.
4. ITEMS REQUIRING DEFERRED SUBMITTALS ARE LISTED BELOW. THESE ITEMS SHALL BE DESIGNED AND FABRICATED BY THE MANUFACTURER ACCORDING TO SPECIFICATIONS GIVEN IN THE CONSTRUCTION DOCUMENTS.
   - A. FABRICATED ROOF TRUSSES (BY ROOF TRUSS MANUFACTURER)
   - B. THE SUBMITTAL OF FIRE ALARM SYSTEM CONSTRUCTION DOCUMENTS SHALL NOT BE REQUIRED FOR REVIEW AND EVALUATION AS PER SECTION 907.1.1 OF THE 2018 INTERNATIONAL BUILDING CODE AND THE NATIONAL FIRE ALARM CODE (NFPA 72).
   - C. ARC FLASH AND COORDINATION STUDY
   - D. FIRE SPRINKLER
   - E. SEISMIC BRACING FOR MECHANICAL, ELECTRICAL AND PLUMBING COMPONENTS PER ASCE 7, CHAPTER 13 (BY MEP CONSULTANT)

SHEET INDEX

GI SHEETS

NUMBER	SHEET NAME
GI-000	COVER SHEET
GI-001	ACCESSIBLE DETAILS & TYP. SIGNAGE
GI-002	ACCESSIBLE DETAILS
GI-003	COMCHECK/FLOOR ASSEMBLIES/WALL TYPES

CIVIL

NUMBER	SHEET NAME
C-0.0	COVER SHEET
C-1.0	DEMO PLAN
C-2.0	SITE PLAN
C-3.0	UTILITY PLAN
C-3.1	STORMWATER PLAN
C-3.2	DRAINAGE PLAN
C-4.0	GRADING PLAN
C-5.0	CIVIL DETAILS
C-5.1	CIVIL DETAILS
C-5.2	CIVIL DETAILS
C-5.3	CIVIL DETAILS
C-5.4	CIVIL DETAILS
C-6.0	EROSION CONTROL PLAN

LANDSCAPE

NUMBER	SHEET NAME
LP101	LANDSCAPE PLANTING PLAN
LI201	IRRIGATION PLAN
L-501	PLANTING DETAILS
L-502	SELECTION/CORRECTION DETAILS
L-503	IRRIGATION DETAILS
L-504	IRRIGATION DETAILS

ARCHITECTURAL

NUMBER	SHEET NAME
AS-101	ARCHITECTURAL SITE & PARKING DETAILS
A-000	CODE SHEET
A-101	MAIN LEVEL FLOOR PLAN & INTERIOR ELEVATIONS
A-102	SECOND LEVEL FLOOR PLAN & INTERIOR ELEVATIONS
A-110	REFLECTED CEILING PLANS
A-120	ROOF PLAN
A-200	ELEVATIONS
A-300	SECTION PLAN
A-400	ENGLARGED PLANS & INTERIOR ELEVATIONS
A-600	DOOR SCHEDULE & TYPES, WINDOW SCHEDULE
A-700	ARCHITECTURAL DETAILS
A-701	ARCHITECTURAL DETAILS
A-702	ARCHITECTURAL DETAILS
A-900	HARDWARE TYPES

STRUCTURAL

NUMBER	SHEET NAME
S001	STRUCTURAL GENERAL NOTES
S002	STRUCTURAL GENERAL NOTES
S101	FOOTING AND FOUNDATION PLAN
S102	LEVEL 2 FRAMING PLAN
S103	ROOF FRAMING PLAN
S401	FOUNDATION DETAILS
S501	FLOOR DETAILS
S502	ROOF DETAILS
S601	SCHEDULES

MECHANICAL

NUMBER	SHEET NAME
M-0.1	MECHANICAL NOTES & LEGENDS
M-1.1	MAIN FLOOR MECHANICAL FLOOR PLAN
M-1.2	SECOND LEVEL MECHANICAL FLOOR PLAN
M-4.1	ENLARGED 1 BEDROOM MECHANICAL PLAN
M-5.1	MECHANICAL DETAILS
M-5.2	MECHANICAL DETAILS
M-6.1	MECHANICAL SCHEDULES
M-7.1	MECHANICAL COMCHECK
M-7.2	MECHANICAL COMCHECK

PLUMBING

NUMBER	SHEET NAME
P-0.1	PLUMBING NOTES & LEGENDS
P-1.1	MAIN FLOOR SEWER PLAN
P-1.2	MAIN FLOOR WATER & GAS PLAN
P-1.3	SECOND FLOOR WATER & GAS PLAN
P-1.4	SECOND FLOOR SEWER PLAN
P-1.5	PLUMBING ROOF PLAN
P-4.1	ENGLARGED 1 BEDROOM PLUMBING PLAN
P-5.1	PLUMBING DETAILS
P-5.2	PLUMBING DETAILS
P-6.1	PLUMBING SCHEDULES & SCHEMATICS

ELECTRICAL

NUMBER	SHEET NAME
E0.01	SYMBOLS & NOTES
E0.02	SCHEDULES & COMCHECK
E1.10	ELECTRICAL SITE PLAN
E3.10	MAIN LEVEL LIGHTING PLAN
E3.11	SECOND LEVEL LIGHTING PLAN
E3.20	MAIN LEVEL POWER PLAN
E3.21	SECOND LEVEL POWER PLAN
E3.30	MAIN LEVEL SYSTEM PLAN
E3.31	SECOND LEVEL SYSTEM PLAN
E3.40	ENLARGED PLAN
E3.50	ONE-LINE DIAGRAM AND SCHEDULES
E3.51	SERVICE LOAD CALCULATIONS
E3.52	PANEL SCHEDULES
E4.01	ELECTRICAL DIAGRAMS AND DETAILS
E4.02	ELECTRICAL DIAGRAMS AND DETAILS
E4.03	ELECTRICAL DIAGRAMS AND DETAILS
E4.04	ELECTRICAL DIAGRAMS AND DETAILS

DEKOLD ARCHITECTURE INC.
1975 Belmont Ave, Idaho Falls, ID. 83404
83402
(208) 206-7338
www.behance.net/kevindekold
kevindekold@hotmail.com

STATE OF UTAH — KEVIN DEKOLD — No. 7164959-0301 — 3/19/2025 — LICENSED ARCHITECT

Civil — Cache Landmark — 95 W Golf Course Rd St. 101, Logan, UT 84321, (435) 713-0099

Landscape — Cache Landmark — 95 W Golf Course Rd St. 101, Logan, UT 84321, (435) 713-0099

Structural — Calder Richards Consulting Engineers — 1805 South Redwood Road Ste 102, South Salt Lake City, UT 84104, (801) 486-1899

Mechanical — Royal — 1837 S E Bay Blvd Provo, UT 84606, (801) 375-2228

Electrical — BNA Consulting — 4225 W Lake Park Blvd St. 275, West Valley City, UT 84121, (435) 628-3870

AIS - WEST VALLEY
EXPANSION INDEPENDANT LIVING BUILDING
2574 S. REDWOOD RD.
WEST VALLEY CITY, UT 84119

REVISIONS:

1	03-19-25
2	00-00-00
3	00-00-00

SHEET NUMBER:

GI-000

3/19/2025

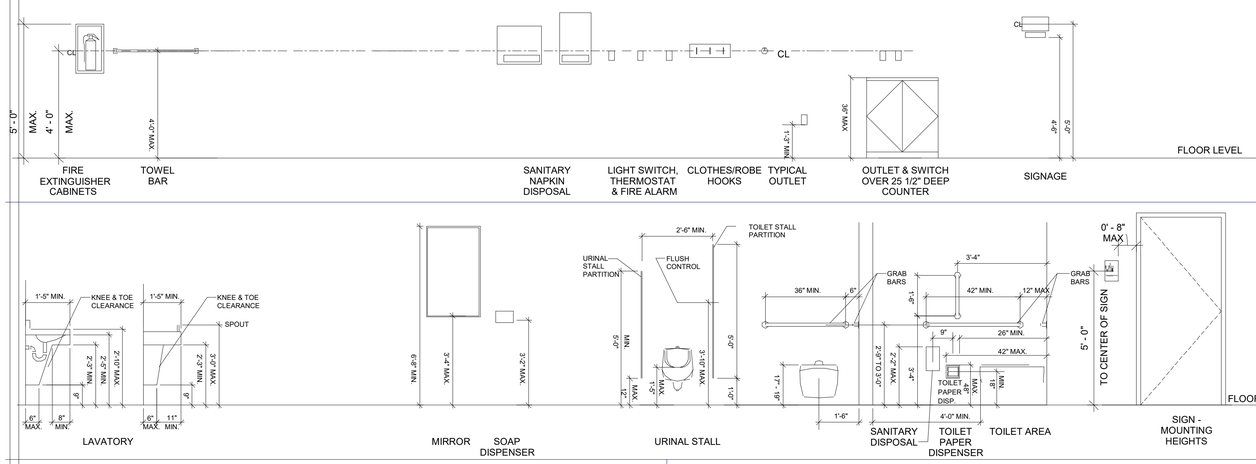

NOTES:
PROVIDE ADA COMPLIANT SIGN FOR EACH RESTROOM. COORDINATE WITH OWNER.

HOT WATER AND DRAIN PIPES MUST BE, OR CONFIGURED TO PROTECT AGAINST CONTACT. THERE SHALL BE NO SHARP ABRASIVE SURFACES UNDER LAVATORIES.

ALL WALL MOUNTED ITEMS REQUIRED SOLID BLOCKING.

WHERE ENHANCED REACH RANGE IS REQUIRED AT LAVATORIES, FAUCETS AND SOAP DISPENSER CONTROLS TO HAVE A REACH DEPTH OF 11" MAX. OR IF AUTOMATIC TO BE ACTIVATED WITH IN A REACH OF 11" MAX. WATER AND SOAP FLOW TO BE PROVIDED WITH A REACH DEPTH OF 11" MAX.

THE SPACE BETWEEN THE GRAB BARS AND SHOWER CONTROLS, SHOWER FITTINGS, AND OTHER GRAB BARS ABOVE THE GRAB BAR TO BE 1 1/2" MIN.

TOILET SEATS ARE TO BE THE OPEN TYPE AS REQUIRED BY IPC403

LOCATE ALL TOILET FLUSH VALVES ON THE OPEN SIDE.

ACCESSORIES SHALL BE INSTALLED AND SEALED TO PROTECT STRUCTURAL ELEMENTS FROM MOISTURE

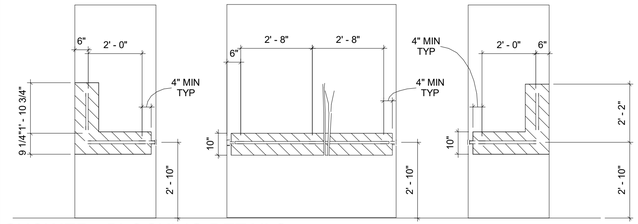

SHOWER - BLOCKING DETAILS
SCALE: NTS

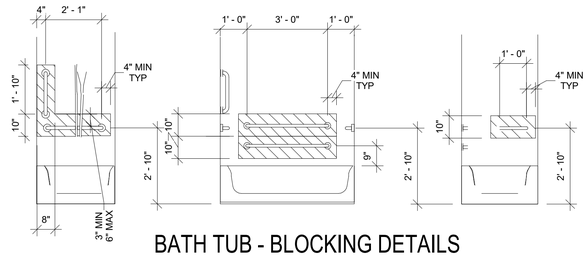

BATH TUB - BLOCKING DETAILS

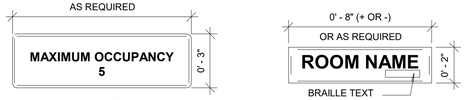

NOTE: 5/8" HIGH LETTERS. COLORS AS SELECTED BY ARCHITECT. PROVIDE AS REQUIRED BY CODE

NOTE: COLOR AS SELECTED BY ARCHITECT.
NOTE:
SIGN AND COMPONENTS TO BE WEATHER APPROPRIATE FOR EXTERIOR APPLICATIONS
*NOTE:
SIZE SIGN AS REQUIRED FOR SCHEDULED VERBIAGE

TYPICAL SIGNS
3" = 1'-0"

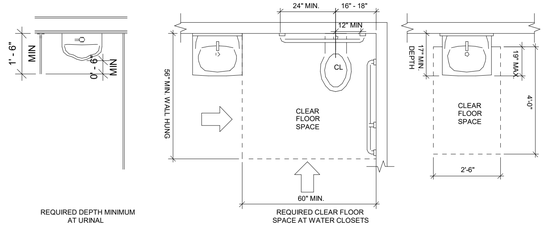

NOTE: ADA COMPLIANT SIGN. RAISED COPY AND BRAILLE. "MP" WITH BACKGROUND COLOR SELECTED BY ARCHITECT.

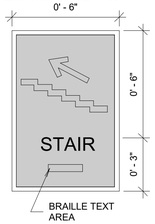

NOTE: ADA COMPLIANT SIGN. RAISED COPY AND BRAILLE. "MP" WITH BACKGROUND COLOR SELECTED BY ARCHITECT.

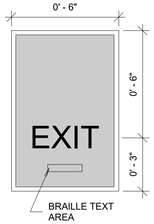

FIRE EXIT SIGNS
3" = 1'-0"

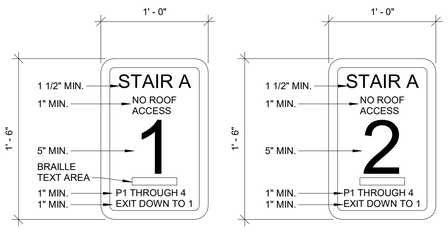

SIGN WITH RADIUS CORNER AND RADIUS "MP" PLASTIC WITH BACKGROUND COLOR SELECTED BY ARCHITECT. TYPICAL

2 STAIR IDENTIFICATION SIGNAGE
SCALE: 1 1/2" = 1'-0"

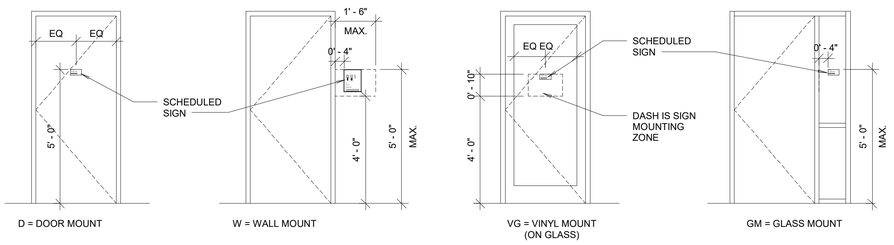

SIGN MOUNTING TYPES - TYPICAL
3/8" = 1'-0"

NOTE: SYMBOL IS WHITE ON A BLUE BACKGROUND

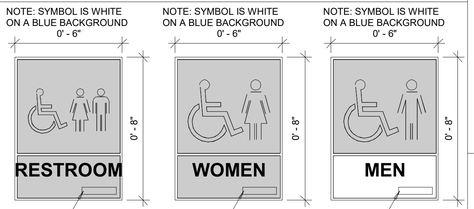

ADA RESTROOM SIGNS
3" = 1'-0"

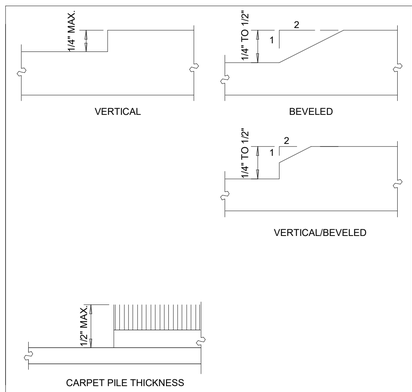

303. CHANGES IN LEVEL

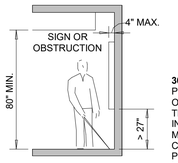

307.3 POST-MOUNTED OBJECTS. OBJECTS ON POSTS OR PYLONS SHALL BE PERMITTED TO OVERHANG 4 INCHES MAXIMUM WHERE MORE THAN 27 INCHES AND NOT MORE THAN 80 INCHES ABOVE THE FLOOR. OBJECTS ON MULTIPLE POSTS OR PYLONS WHERE THE CLEAR DISTANCE BETWEEN THE POSTS OR PYLONS IS GREATER THAN 12 INCHES SHALL HAVE THE LOWEST EDGE OF SUCH OBJECT EITHER 27 INCHES MAXIMUM OR 80 INCHES MINIMUM ABOVE THE FLOOR.

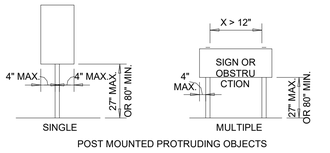

307. PROTRUDING OBJECTS

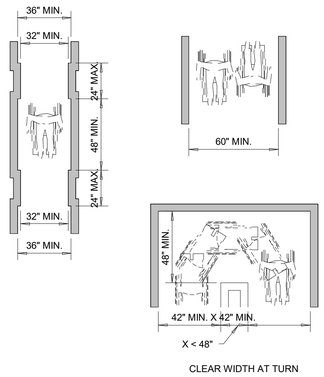

403. ACCESSIBLE ROUTES

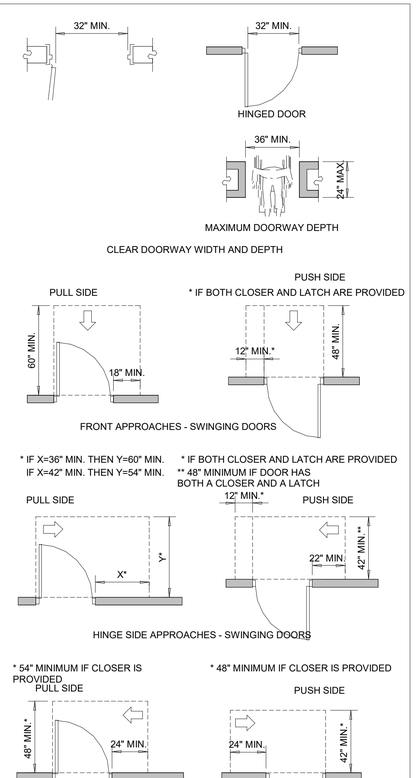

404. DOORS AND DOORWAYS

DEKOLD ARCHITECTURE INC.
1975 Belmont Ave, Idaho Falls, ID, 83404
83402
(208) 206-7338
www.behance.net/kevindekold
kevindekold@hotmail.com

STATE OF UTAH
KEVIN DEKOLD
No. 7164959-0301
1/22/2025
LICENSED ARCHITECT

Civil
Cache Landmark
95 W Golf Course Rd St. 101
Logan, UT 84321
(435) 713-0099

Landscape
Cache Landmark
95 W Golf Course Rd St. 101
Logan, UT 84321
(435) 713-0099

Structural
Calder Richards Consulting Engineers
1805 South Redwood Road Ste 102
Salt Lake City, UT 84104
(801) 466-1899

Mechanical
Royal
1837 S E Bay Blvd
Provo, UT 84606
(801) 375-2226

Electrical
BNA Consulting
4225 W Lake Park Blvd St. 275
West Valley City, UT 84121
(435) 628-3870

AIS - WEST VALLEY
EXPANSION INDEPENDANT LIVING BUILDING
2574 S. REDWOOD RD.
WEST VALLEY CITY, UT 84119

REVISIONS:
1 03-19-25
2 00-00-00
3 00-00-00

SHEET NUMBER:
GI-001
3/19/2025

3/19/2025 4:21:03 PM

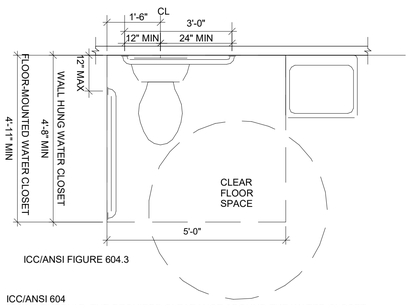

ICC/ANSI FIGURE 604.3

ICC/ANSI 604
604.3.2 OVERLAP. THE REQUIRED CLEARANCE AROUND THE WATER CLOSET SHALL BE PERMITTED TO OVERLAP THE WATER CLOSET, ASSOCIATED GRAB BARS, PAPER DISPENSERS, SANITARY NAPKIN RECEPTACLES, COST HOOKS, SHELVES ACCESSIBLE ROUTES, CLEAR FLOOR SPACE AT OTHER FIXTURES AND THE TURNING SPACE. NO OTHER FIXTURES OR OBSTRUCTIONS SHALL BE WITHIN THE REQUIRED WATER CLOSET CLEARANCE.
604.6 FLUSH CONTROLS. FLUSH CONTROLS SHALL BE HAND OPERATED OR AUTOMATIC. HAND OPERATED FLUSH CONTROLS SHALL COMPLY WITH SECTION FLUSH CONTROLS SHALL BE LOCATED ON THE OPEN SIDE OF THE WATER CLOSET.

WATER CLOSET - CLEAR FLOOR SPACE

SCALE: NTS

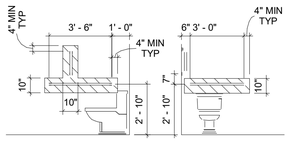

WATER CLOSET - BLOCKING DETAILS

SCALE: NTS

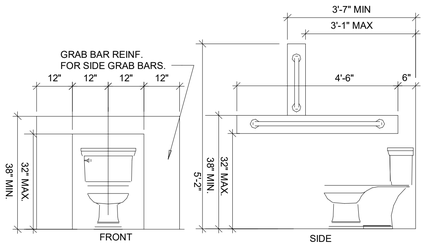

NOTE: AREAS OUTLINED IN DASHED LINES REPRESENT LOCATIONS OF WALL REINFORCING FOR FUTURE INSTALLATION OF GRAB BARS TYPICAL FOR ALL FIRST FLOOR UNITS WITHOUT EXCEPTION.

TYP. REINF WALL FOR GRAB BARS

SCALE: NTS

ACCESSIBLE COMPARTMENTS

SCALE: NTS

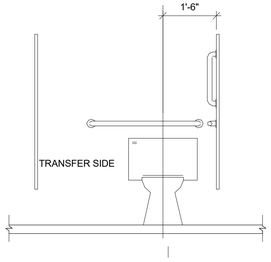

(a) PROTRUDING DISPENSER ABOVE GRAB BAR

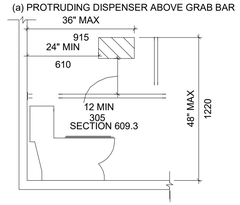

(b) PROTRUDING DISPENSER BELOW GRAB BAR

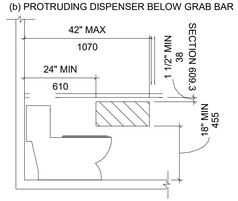

(c) RECESSED DISPENSER

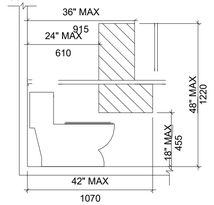

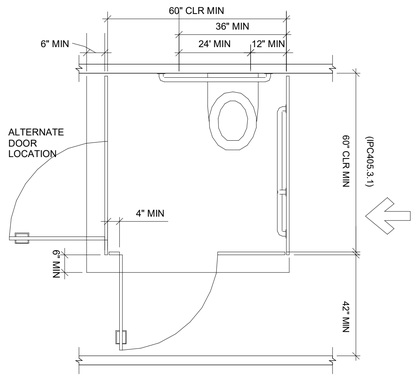

ICC/ANSI SECTION 604.8.5 TOE CLEARANCE. THE FRONT AND ONE SIDE OF THE COMPARTMENT SHALL HAVE A TOE CLEARANCE THAT EXTENDS AT LEAST 6" BEYOND THE TOILET PARTITION. THE FRONT CLEARANCE IS NOT REQUIRED FOR COMPARTMENTS THAT ARE GREATER THAN 62" IN DEPTH. THE SIDE CLEARANCE IS NOT REQUIRED FOR COMPARTMENTS THAT ARE GREATER THAN 65 " IN WIDTH.

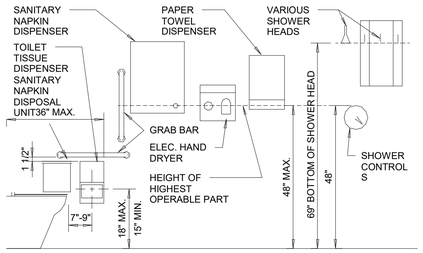

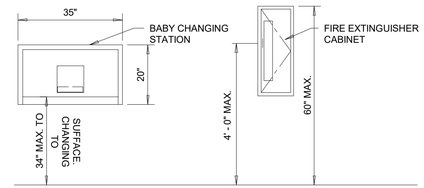

604.7 ACCESSORIES AND EQUIPMENT

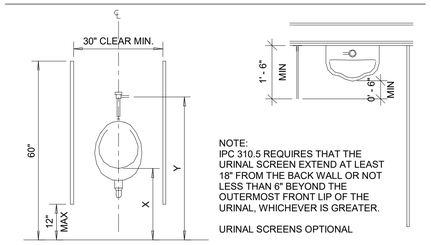

NOTE:
IPC 310.5 REQUIRES THAT THE URINAL SCREEN EXTEND AT LEAST 18" FROM THE BACK WALL OR NOT LESS THAN 6" BEYOND THE OUTERMOST FRONT LIP OF THE URINAL, WHICHEVER IS GREATER.

URINAL SCREENS OPTIONAL

FOR CHILDREN'S URINALS, X = 16" MAX. AND Y = 44". FOR HC URINALS, X = 17" MAX. AND Y = 44". ALL OTHER URINALS, X = 24" AND Y = 48" MAX.

605 URINALS

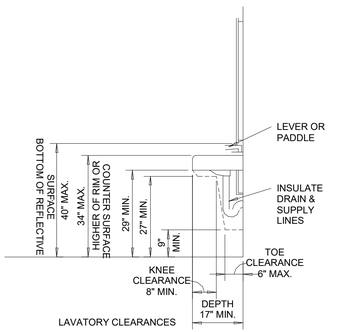

LAVATORY CLEARANCES

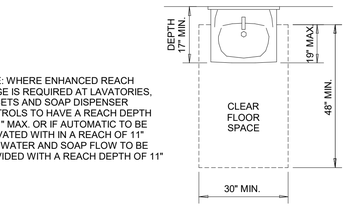

NOTE: WHERE ENHANCED REACH RANGE IS REQUIRED AT LAVATORIES, FAUCETS AND SOAP DISPENSER CONTROLS TO HAVE A REACH DEPTH OF 11" MAX. OR IF AUTOMATIC TO BE ACTIVATED WITH IN A REACH OF 11" MAX. WATER AND SOAP FLOW TO BE PROVIDED WITH A REACH DEPTH OF 11" MAX.

CLEAR FLOOR SPACE AT LAVATORIES

606. LAVATORIES AND SINKS

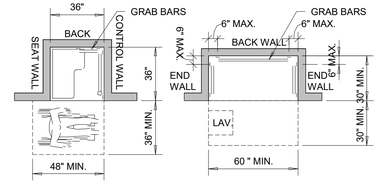

TRANSFER-TYPE 36" X 36" | STANDARD ROLL-IN 30" X 60"

SHOWER COMPARTMENT

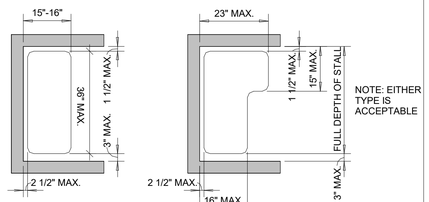

RECTANGLE | L-SHAPE

SHOWER SEAT DESIGN

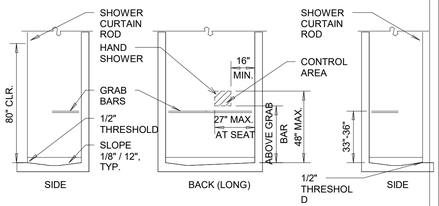

NOTE: SHOWER HEAD AND CONTROL AREA MAY BE ON BACK (LONG) WALL (AS SHOWN) OR ON EITHER SIDE WALL.

GRAB BARS AT SHOWER STALLS | 30" X 60" STALL

PROVIDE REINFORCEMENT IN WALL FOR GRAB BARS AND SHOWER SEAT

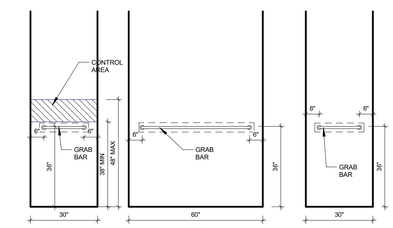

STANDARD ROLL-IN

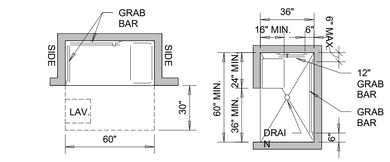

ROLL-IN WITH SEAT | ALTERNATE ROLL-IN

ROLL-IN SHOWER WITH FOLDING SEAT

A HAND SHOWER WITH A HOSE 59 INCHES (1500 MM) MINIMUM IN LENGTH, THAT CAN BE USED AS BOTH A FIXED SHOWER HEAD AND AS A HAND SHOWER, SHALL BE PROVIDED. THE HAND SHOWER SHALL HAVE A CONTROL WITH A NONPOSITIVE SHUT-OFF FEATURE. WHERE PROVIDED, AN ADJUSTABLE-HEIGHT HAND SHOWER MOUNTED ON A VERTICAL BAR SHALL BE INSTALLED SO AS TO NOT OBSTRUCT THE USE OF GRAB BARS.

608. SHOWER COMPARTMENTS

DEKOLD ARCHITECTURE INC.
1975 Belmont Ave, Idaho Falls, ID. 83404
83402
(208) 206-7338
www.behance.net/kevindekold
kevindekold@hotmail.com

KEVIN DEKOLD
No. 7164959-0301
1/22/2025
LICENSED ARCHITECT

Civil
Cache Landmark
95 W Golf Course Rd St. 101
Logan, UT 84321
(435) 713-0099

Landscape
Cache Landmark
95 W Golf Course Rd St. 101
Logan, UT 84321
(435) 713-0099

Structural
Calder Richards Consulting Engineers
1805 South Redwood Road Ste 102
Salt Lake City, UT 84104
(801) 466-1899

Mechanical
Royal
1837 S E Bay Blvd
Provo, UT 84606
(801) 375-2228

Electrical
BNA Consulting
4225 W Lake Park Blvd St. 275
West Valley City, UT 84121
(435) 628-3670

AIS - WEST VALLEY
EXPANSION INDEPENDANT LIVING BUILDING
2574 S. REDWOOD RD.
WEST VALLEY CITY, UT 84119

REVISIONS:
1 03-19-25
2 00-00-00
3 00-00-00

SHEET NUMBER:
GI-002
3/19/2025

COMcheck Software Version COMcheckWeb
Envelope Compliance Certificate

Project Information

Energy Code:	2021 IECC
Project Title:	West Valley Expansion Independent Living Building
Location:	West Valley City, Utah
Climate Zone:	5b
Project Type:	New Construction
Vertical Glazing / Wall Area:	12%
All Electric:	false
Is Renewable:	false
Has Battery:	false
Has Charger:	false
Has Heat Pump:	false

Construction Site:
2574 South Redwood Dr
West Valley, Utah 84119

Owner/Agent:
Kristen Floyd
Ability Inclusion Services

Designer/Contractor:
Kevin DeKold
DeKold Architecture Inc
208-206-7338
kevindekold@hotmail.com

Efficiency Packages

Description	Credit
Reduced lighting power	12.0

Credits: 10.0 Required 12.0 Proposed

Building Area	Floor Area
1-Multifamily (Multifamily) : Residential	5576

Envelope Assemblies

Assembly	Gross Area or Perimeter	Cavity R-Value	Cont. R-Value	Proposed U-Factor	Budget U-Factor$_{tot}$
Roof: Roof, [Bldg. Use 1 - Multifamily]	5594	---	30.0	0.032	0.032
Floor SOG: Floor SOG, Vertical 2 ft., [Bldg. Use 1 - Multifamily] (d)	343	---	5.0	0.580	0.520
NORTH Exterior Wall North: Exterior Wall North, [Bldg. Use 1 - Multifamily]	2499	21.0	0.0	0.062	0.051
Door HM Glass North: , Swinging, [Bldg. Use 1 - Multifamily]	48	---	---	0.480	0.370
Window Cnst North: , Perf. Specs.: Product ID Coeur D'Alene Window Co, SHGC 0.23, [Bldg. Use 1 - Multifamily] (c)	330	---	---	0.270	0.450
EAST Exterior Wall East: Exterior Wall East, [Bldg. Use 1 - Multifamily]	1372	21.0	0.0	0.062	0.051
Door HM Glass East: , Swinging, [Bldg. Use 1 - Multifamily]	48	---	---	0.480	0.370
Window Fixed East: , Perf. Specs.: Product ID Coeur D'Alene Window Co, SHGC 0.23, PF 5.00, [Bldg. Use 1 - Multifamily] (c)	94	---	---	0.270	0.360
Window Cnst East: , Perf. Specs.: Product ID Coeur D'Alene Window Co, SHGC 0.23, [Bldg. Use 1 - Multifamily] (c)	150	---	---	0.270	0.360
SOUTH Exterior Wall South: Exterior Wall South, [Bldg. Use 1 - Multifamily]	2534	21.0	0.0	0.062	0.051
Door HM Glass South: , Swinging, [Bldg. Use 1 - Multifamily]	72	---	---	0.480	0.370
Window Cnst South: , Perf. Specs.: Product ID Coeur D'Alene Window Co, SHGC 0.23, [Bldg. Use 1 - Multifamily] (c)	240	---	---	0.270	0.450
WEST Exterior Wall West: Exterior Wall West, [Bldg. Use 1 - Multifamily]	1416	21.0	0.0	0.062	0.051
Door HM West: , Swinging, [Bldg. Use 1 - Multifamily]	24	---	---	0.290	0.370
Window Fixed West: , Perf. Specs.: Product ID Coeur D'Alene Window Co, SHGC 0.23, [Bldg. Use 1 - Multifamily] (c)	63	---	---	0.270	0.360
Window Cnst West: , Perf. Specs.: Product ID Coeur D'Alene Window Co, SHGC 0.23, PF 8.00, [Bldg. Use 1 - Multifamily] (c)	75	---	---	0.270	0.450

(a) Budget U-factors are used for software baseline calculations ONLY, and are not code requirements.
(b) 'Other' components require supporting documentation for proposed U-factors.
(c) Fenestration product performance must be certified in accordance with NFRC and requires supporting documentation.
(d) Slab-On-Grade proposed and budget U-factors shown in table are F-factors.

Envelope PASSES: Design 3% better than code

Envelope Compliance Statement

Compliance Statement: The proposed envelope design represented in this document is consistent with the building plans, specifications, and other calculations submitted with this permit application. The proposed envelope systems have been designed to meet the 2021 IECC requirements in COMcheckWeb and to comply with any applicable mandatory requirements listed in the Inspection Checklist.

Kevin DeKold - Architect — Name - Title
Signature
February 4th, 2025 — Date

STC RATING:		IIC RATING:		FIRE RATING:	1
STC RATING TEST FILE NUMBER		IIC RATING TEST FILE NUMBER		FIRE RATING TEST FILE NUMBER	

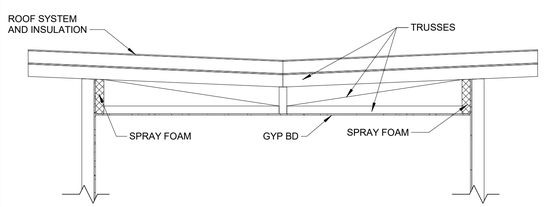

STC RATING:	58	IIC RATING:	62	FIRE RATING:	1 HOUR
STC RATING TEST FILE NUMBER	NGC 5019075	IIC RATING TEST FILE NUMBER	NGC 7019099	FIRE RATING TEST FILE NUMBER	M546

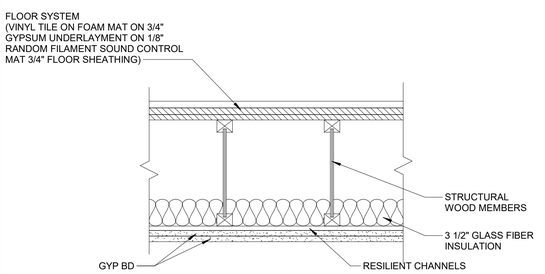

STC RATING:		IIC RATING:		FIRE RATING:	N/A
STC RATING TEST FILE NUMBER		IIC RATING TEST FILE NUMBER		FIRE RATING TEST FILE NUMBER	

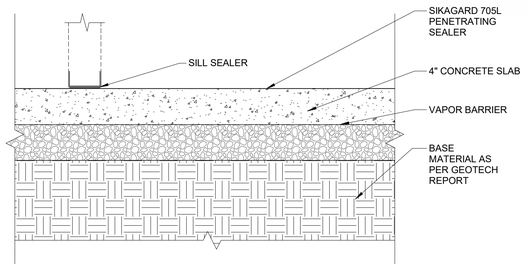

STC RATING:		IIC RATING:		FIRE RATING:	1 HOUR
STC RATING TEST FILE NUMBER		IIC RATING TEST FILE NUMBER		FIRE RATING TEST FILE NUMBER	M563

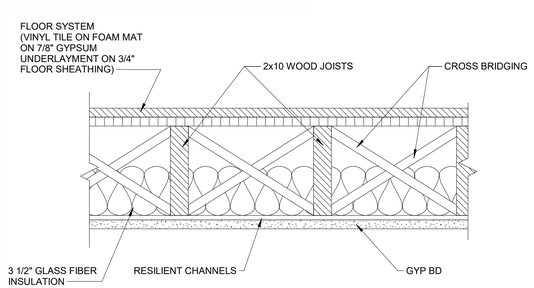

STC RATING:		FIRE RATING:	
STC RATING TEST FILE NUMBER:		FIRE RATING TEST FILE NUMBER:	

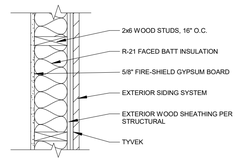

STC RATING:	STC-51	FIRE RATING:	1 HOUR
STC RATING TEST FILE NUMBER:	NGC 2011071	FIRE RATING TEST FILE NUMBER:	UL DESIGN: U305 - 1 HOUR

*SEE COMPLETE INFO IN SPEC MANUAL APPENDIX

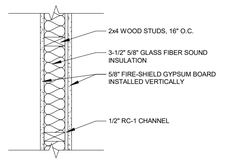

STC RATING:		FIRE RATING:	
STC RATING TEST FILE NUMBER:		FIRE RATING TEST FILE NUMBER:	

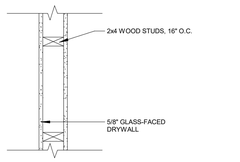

STC RATING:		FIRE RATING:	
STC RATING TEST FILE NUMBER:		FIRE RATING TEST FILE NUMBER:	

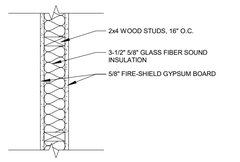

STC RATING:	STC-57	FIRE RATING:	1 HOUR
STC RATING TEST FILE NUMBER:	NGC 2010081	FIRE RATING TEST FILE NUMBER:	UL DESIGN: U305 - 1 HOUR

*SEE COMPLETE INFO IN SPEC MANUAL APPENDIX

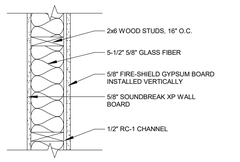

STC RATING:		FIRE RATING:	
STC RATING TEST FILE NUMBER:		FIRE RATING TEST FILE NUMBER:	

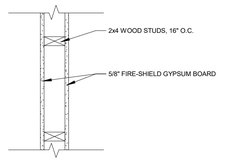

STC RATING:	STC-57	FIRE RATING:	1 HOUR
STC RATING TEST FILE NUMBER:	NGC 2010081	FIRE RATING TEST FILE NUMBER:	UL DESIGN: U305 - 1 HOUR

*SEE COMPLETE INFO IN SPEC MANUAL APPENDIX

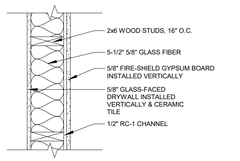

STC RATING:		FIRE RATING:	
STC RATING TEST FILE NUMBER:		FIRE RATING TEST FILE NUMBER:	

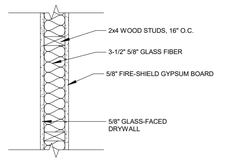

STC RATING:	STC-57	FIRE RATING:	1 HOUR
STC RATING TEST FILE NUMBER:	NGC 2010081	FIRE RATING TEST FILE NUMBER:	UL DESIGN: U305 - 1 HOUR

*SEE COMPLETE INFO IN SPEC MANUAL APPENDIX

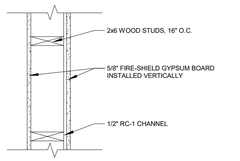

DEKOLD ARCHITECTURE INC.
1975 Belmont Ave, Idaho Falls, ID. 83404
83402
(208) 206-7338
www.behance.net/kevindekold
kevindekold@hotmail.com

STATE OF UTAH
KEVIN DEKOLD
No. 7164959-0301
3/19/2025
LICENSED ARCHITECT

Civil
Cache Landmark
95 W Golf Course Rd St. 101
Logan, UT 84321
(435) 713-0099

Landscape
Cache Landmark
95 W Golf Course Rd St. 101
Logan, UT 84321
(435) 713-0099

Structural
Calder Richards Consulting Engineers
1805 South Redwood Road Ste 102
Salt Lake City, UT 84104
(801) 486-1699

Mechanical
Royal
1837 S E Bay Blvd
Provo, UT 84606
(801) 375-2228

Electrical
BNA Consulting
4225 W Lake Park Blvd St. 275
West Valley City, UT 841 21
(435) 628-3870

AIS - WEST VALLEY
EXPANSION INDEPENDANT LIVING BUILDING
2574 S. REDWOOD RD.
WEST VALLEY CITY, UT 84119

REVISIONS:
1 03-19-25
2 00-00-00
3 00-00-00

SHEET NUMBER:
GI-003
3/19/2025

SITE-CONSTRUCTION DOCUMENTS
AIS RESIDENTIAL FACILITY
LOCATED AT 2574 SOUTH REDWOOD ROAD
WEST VALLEY CITY, UTAH 84119

GENERAL NOTES:

1. NO WORK IS TO BEGIN UNTIL ALL NECESSARY PERMITS HAVE BEEN OBTAINED. GENERAL CONTRACTOR TO OBTAIN AND PAY FOR ALL NECESSARY PERMITS.

2. REQUIREMENTS SHOWN ON SITE PLAN SHALL GOVERN. GENERAL CONTRACTOR SHALL POINT OUT ANY DISCREPANCIES PRIOR TO CONSTRUCTION.

3. ENTIRE INSTALLATION SHALL MEET ALL APPLICABLE CODES.

4. CONTRACTOR TO FIELD VERIFY ALL CONDITIONS AND DIMENSIONS ON-SITE.

5. GENERAL CONTRACTOR TO PROVIDE ALL EQUIPMENT AND PERSONNEL REQUIRED FOR FINAL CHECKOUT OF ALL FACILITIES BY OWNER'S REPRESENTATIVE.

6. GENERAL CONTRACTOR TO KEEP THE PROJECT SITE NEAT AND ORDERLY. GENERAL YARD CLEAN UP SHALL BE CONDUCTED AT THE END OF EACH DAY AND SHALL MEET THE APPROVAL OF THE OWNER'S REPRESENTATIVE PRIOR TO PROJECT COMPLETION.

7. THE GENERAL CONTRACTOR SHALL PROVIDE TRAFFIC CONTROL DURING CONSTRUCTION.

8. WHERE THERE IS A CONFLICT BETWEEN THESE PLANS AND THE SPECIFICATIONS, OR ANY APPLICABLE STANDARDS, THE HIGHER QUALITY STANDARD SHALL APPLY.

9. THE CONTRACTOR SHALL BE RESPONSIBLE FOR KEEPING ROADS & WALKWAYS FREE AND CLEAR OF ALL CONSTRUCTION DEBRIS AND DIRT TRACKED FROM THE SITE.

10. DIMENSIONS FOR LAYOUT AND CONSTRUCTION ARE NOT TO BE SCALED FROM ANY DRAWING. IF PERTINENT DIMENSIONS ARE NOT SHOWN, CONTACT THE ENGINEER FOR CLARIFICATION, AND ANNOTATE THE DIMENSION ON THE AS-BUILT RECORD DRAWINGS.

11. CONTRACTOR TO MAINTAIN ACCESS DURING CONSTRUCTION TO ADJACENT BUSINESS FACILITIES.

UTILITY GENERAL NOTES:

1. ALL UTILITY LOCATIONS SHOWN ARE BASED ON FIELD SURFACE EVIDENCE AT THE TIME OF SURVEY AND ARE TO BE CONSIDERED AN APPROXIMATE LOCATION ONLY. IT IS THE CONTRACTOR'S RESPONSIBILITY TO FIELD VERIFY THE ACTUAL LOCATION OF ALL UTILITIES, PUBLIC OR PRIVATE, WHETHER SHOWN ON THE PLANS OR NOT, PRIOR TO CONSTRUCTION. REPORT ANY DISCREPANCIES TO THE ENGINEER PRIOR TO CONSTRUCTION.

2. WHERE A PROPOSED UTILITY CROSSES AN EXISTING UTILITY, IT IS THE CONTRACTOR'S RESPONSIBILITY TO FIELD VERIFY THE HORIZONTAL AND VERTICAL LOCATION OF SUCH EXISTING UTILITY, EITHER THROUGH POTHOLING OR ALTERNATIVE METHOD. REPORT INFORMATION TO THE ENGINEER PRIOR TO CONSTRUCTION.

3. GENERAL CONTRACTOR TO COORDINATE ALL UTILITY WORK WITH THE APPROPRIATE UTILITY PROVIDER. GENERAL CONTRACTOR TO VERIFY AND FOLLOW ALL UTILITY PROVIDER REQUIREMENTS, PROCEDURES, STANDARDS AND SPECIFICATIONS.

4. IT SHALL BE THE CONTRACTOR'S RESPONSIBILITY TO VERIFY THE ACTUAL LOCATION AND ELEVATION OF EXISTING UTILITIES WHICH MAY BE IN CONFLICT WITH THE PROPOSED CONSTRUCTION. IF A CONFLICT DOES EXIST, THE CONTRACTOR SHALL NOTIFY THE ENGINEER PRIOR TO CONSTRUCTION SO THAT ADJUSTMENTS CAN BE MADE.

GRADING GENERAL NOTES:

1. FINAL GRADES ARE SUBJECT TO MINOR CHANGES AS APPROVED BY OWNER. NO GRADE CHANGES IN EXCESS OF 0.05 FEET WITHOUT CIVIL ENGINEER'S APPROVAL.

2. ALL FILL MATERIAL SHALL BE CLEAN FILL SOIL APPROVED BY CIVIL ENGINEER.

3. ALL CONSTRUCTION LAYOUT AND STAKING SHALL BE PERFORMED UNDER THE RESPONSIBLE CHARGE OF A LAND SURVEYOR LICENSED IN THE STATE OF UTAH AND BY SURVEY CREW CHIEF OR ENGINEERING TECHNICIAN EXPERIENCED IN CONSTRUCTION LAYOUT AND STAKING TECHNIQUES AS REQUIRED BY THE SPECIFIC TYPE OF WORK BEING PERFORMED.

4. ACCESS AND HAULAGE ROADS SHALL BE MAINTAINED IN A DUST-FREE CONDITION BY SURFACING OR OTHER TREATMENT AS APPROVED BY THE CIVIL ENGINEER. FUGITIVE DUST SHALL BE CONTROLLED IN ALL OTHER OPERATIONAL AREAS OF THE PROJECT SITE. WATER TRUCKS OR OTHER MEANS MAY BE EMPLOYED TO CONTROL DUST AS NECESSARY.

5. CONTRACTOR SHALL MATCH GRADES AT SAWCUT LINE OF EXISTING CONCRETE FLAT WORK, CURB & GUTTER, AND SIDEWALKS.

6. CONTRACTOR SHALL MATCH FINISHED GROUND GRADES AT PROJECT LIMIT LINES.

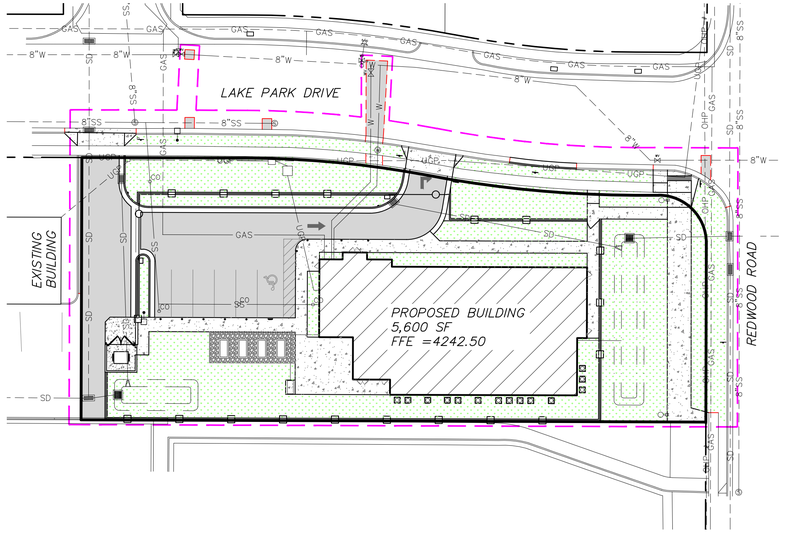

OVERALL SITE MAP
SCALE: 1"=30'

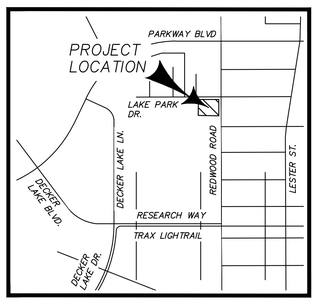

VICINITY MAP

PROPERTY OWNER

WORK ACTIVITY CENTER
CONTACT: KRISTEN FLOYD
(801) 977-9779
(801) 941-3541
kristenf@abilityis.org
abilityIS.org

DATE OF PREPARATION:

ORIGINAL ISSUE: 19 MARCH 2025

SHEET INDEX

DESCRIPTION	SHEET
COVER SHEET	C-0.0
DEMO PLAN	C-1.0
SITE PLAN	C-2.0
UTILITY PLAN	C-3.0
STORMWATER PLAN	C-3.1
DRAINAGE REPORT	C-3.2
GRADING PLAN	C-4.0
CIVIL DETAILS	C-5.0-5.3
WVC DETAILS	C-5.4
EROSION CONTROL PLAN	C-6.0
LANDSCAPE PLANTING PLAN	LP101
IRRIGATION PLAN	LI201
LANDSCAPE & IRRIGATION DETAILS	L-501-504

LEGEND:

- PROJECT LIMIT LINE
- PROPERTY LINE
- RIGHT OF WAY LINE
- CONCRETE EDGE
- SAWCUT LINE
- CURB AND GUTTER
- GAS — PROPOSED GAS LINE
- GAS — EXISTING GAS LINE
- UGP — PROPSED UNDERGROUND POWER LINE
- UGP — EXISTING UNDERGROUND POWER LINE
- OHP — EXISTING OVERHEAD POWER LINE
- SD — PROPOSED STORM DRAIN LINE
- SD — EXISTING STORM DRAIN LINE
- SS — PROPOSED SEWER LINE
- SS — EXISTING SEWER LINE
- W — PROPOSED WATER LINE
- W — PROPOSED FIRE LINE
- 8"W — EXISTING WATER LINE AND SIZE
- WATER VALVE
- FIRE HYDRANT
- WATER METER
- SEWER MANHOLE
- STORM DRAIN BOXES
- LIGHT POLES

HATCH LEGEND:

- CONCRETE
- HEAVY DUTY CONCRETE
- ASPHALT
- PROPOSED BUILDING
- PROPOSED GRAVEL PATH
- LANDSCAPE AREA

UTILITY CONTACTS

FIRE PROTECTION:
West Valley City Fire Dept.
3600 S Constitution Blvd.
West Valley City, Utah 84119
(801) 963-3336

WATER / SEWER:
Granger-Hunter Improvement District
2888 South 3600 West
West Valley City, Utah 84119
(801) 968-3551

STORM WATER:
West Valley City Public Works
3600 S Constitution Blvd. Ste. 260
West Valley City, Utah 84119
CONTACT: Daniel Johnson, P.E.
(801) 965-7452

STREETS:
West Valley City Street Department
2855 South 3600 West
West Valley City, Utah 84119
(801) 955-3703

POWER:
Rocky Mountain Power
4171 W. Lake Park Blvd.
West Valley City, Utah 84120
(888) 221-7070

NATURAL GAS:
Enbridge Gas
333 State St.
Salt Lake City, Utah 84111
(800) 323-5517

CIVIL ENGINEER

CACHE-LANDMARK ENGINEERING
95 GOLF COURSE RD, SUITE 101
Logan, Utah 84321
(435) 713-0099

Steven Earl, P.E., P.L.S.
(435) 787-1199
searl@cachelandmark.com

Jeremy Jensen,
Project Manager
(435) 770-3441
jjensen@cachelandmark.com

Know what's below. Call 811 before you dig.
BLUE STAKES OF UTAH
UTILITY NOTIFICATION CENTER, INC.
www.bluestakes.org
1-800-662-4111

PERMIT SET

NO. | DESCRIPTION | DATE:

PROFESSIONAL ENGINEER
STEVEN C. EARL
318575-2202
3/19/25
STATE OF UTAH

SHEET DESCRIPTION: COVER SHEET

AIS RESIDENTIAL FACILITY
2574 SOUTH REDWOOD ROAD
WEST VALLEY CITY, UT 84119

Cache • Landmark
Engineers
Surveyors
Planners
95 Golf Course Rd.
Suite 101
Logan, UT 84321
435.713.0099

DATE: 19 MARCH 2025
SCALE: 1" = 40'
DESIGN BY: J. JENSEN
CHECKED BY: S. EARL
APPROVED BY: S. EARL
PROJECT NUMBER: 570-2402
SHEET: C-0.0

PLOTTED: March 18, 2025 BY Jeremy Jensen FILE: Z:\2024 PROJECTS\570-2402 DEKOLD ARCHITECTURE - WEST VALLEY CITY - RESIDENTIAL FACILITY\CAD\CONSTRUCTION DOCUMENTS\570-2402 C-0.0 COVER SHEET.DWG

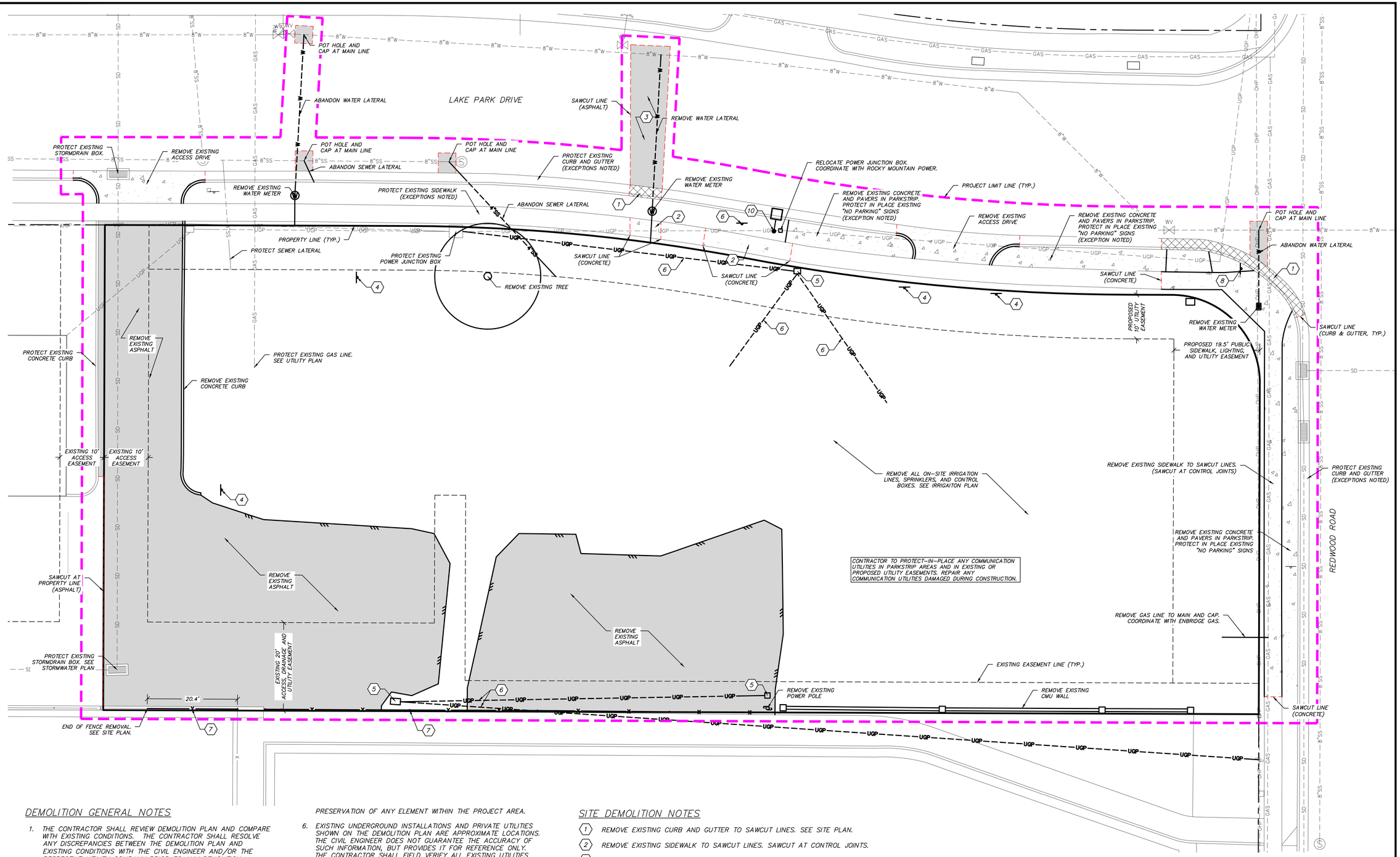

DEMOLITION GENERAL NOTES

1. THE CONTRACTOR SHALL REVIEW DEMOLITION PLAN AND COMPARE WITH EXISTING CONDITIONS. THE CONTRACTOR SHALL RESOLVE ANY DISCREPANCIES BETWEEN THE DEMOLITION PLAN AND EXISTING CONDITIONS WITH THE CIVIL ENGINEER AND/OR THE RESPECTIVE UTILITY COMPANY PRIOR TO ANY DEMOLITION ACTIVITIES.
2. THE CONTRACTOR SHALL PROMPTLY REPAIR ANY DAMAGES TO ADJACENT FACILITIES OR FINISHES CAUSED BY DEMOLITION OR CONSTRUCTION WORK. ALL REPAIR WORK SHALL BE AT NO ADDITIONAL COST.
3. THE PROJECT AREA SHALL BE KEPT CLEAN AND FREE OF DEBRIS AND REFUSE AT ALL TIMES. CONTRACTOR TO REMOVE ALL DEMOLITION DEBRIS FROM SITE IMMEDIATELY UPON DECONSTRUCTION AND ENSURE PROPER AND LEGAL DISPOSAL OF ALL DEMOLITION MATERIAL.
4. THE CONTRACTOR IS RESPONSIBLE FOR VERIFYING THE LOCATION OF ALL EXISTING UTILITIES. IF DISCREPANCIES EXIST BETWEEN THE DEMOLITION PLAN AND EXISTING SITE CONDITIONS, THE CIVIL ENGINEER MUST BE NOTIFIED IMMEDIATELY.
5. THE CONTRACTOR SHALL CONTACT THE CIVIL ENGINEER IMMEDIATELY IF THERE IS ANY DOUBT AS TO THE REMOVAL OR PRESERVATION OF ANY ELEMENT WITHIN THE PROJECT AREA.
6. EXISTING UNDERGROUND INSTALLATIONS AND PRIVATE UTILITIES SHOWN ON THE DEMOLITION PLAN ARE APPROXIMATE LOCATIONS. THE CIVIL ENGINEER DOES NOT GUARANTEE THE ACCURACY OF SUCH INFORMATION, BUT PROVIDES IT FOR REFERENCE ONLY. THE CONTRACTOR SHALL FIELD VERIFY ALL EXISTING UTILITIES PRIOR TO ANY DEMOLITION ACTIVITIES.
7. THE CONTRACTOR SHALL COORDINATE ALL INFORMATION SHOWN ON DEMOLITION PLAN WITH ALL OTHER PLANS IN DOCUMENT SET PRIOR TO CONSTRUCTION.
8. BLUE STAKES DIGGING PERMIT REQUIRED.
9. CONTRACTOR TO LEGALLY DISPOSE OF ALL WASTE AND DEBRIS.
10. RECYCLE ASPHALT, CONCRETE, METALS, ETC, WHERE POSSIBLE.
11. ALL WATER, FIRE, AND SEWER SERVICES STUBBED TO PROPERTY MUST BE USED. WATER, FIRE, AND SEWER LINES MUST BE ABANDONED AT DISTRICT'S MAIN IF NOT USED. ALL ABANDONED LINES TO BE INSPECTED WITH GRANGER-HUNTER IMPROVEMENT DISTRICT PRIOR TO BEING BURIED.

SITE DEMOLITION NOTES

1. REMOVE EXISTING CURB AND GUTTER TO SAWCUT LINES. SEE SITE PLAN.
2. REMOVE EXISTING SIDEWALK TO SAWCUT LINES. SAWCUT AT CONTROL JOINTS.
3. REMOVE EXISTING ASPHALT TO SAWCUT LINES. SEE SITE AND UTILITY PLANS.
4. REMOVE EXISTING ON-SITE "NO TRESPASSING, NO PARKING" SIGNS.
5. REMOVE EXISTING POWER BOXES. COORDINATE WITH ROCKY MOUNTAIN POWER.
6. REMOVE OR ABANDON EXISTING POWER CONDUIT LINES. COORDINATE WITH ROCKY MOUNTAIN POWER.
7. EXISTING CHAIN LINK FENCE. CONTRACTOR TO ENSURE COORDINATION WITH PROPERTY OWNER AND GRANITE SCHOOL DISTRICT ON REMOVAL OR PRESERVATION OF FENCE.
8. REMOVE EXISTING STOP SIGN. PRESERVE FOR REINSTALLATION. SEE SHEET C-5.1/DETAIL 12.
9. REMOVE EXISTING NO PARKING SIGN. PRESERVE FOR REINSTALLATION.
10. REMOVE EXISTING LIGHT POLE. SEE UTILITY PLAN.

DEMOLITION HATCH LEGEND

- EXISTING ASPHALT TO BE REMOVED.
- EXISTING CONCRETE TO BE REMOVED.
- EXISTING CURB & GUTTER TO BE REMOVED.

DEMO PLAN

0 5' 10' 20'

GRAPHIC SCALE 1"= 10'

PERMIT SET

NO.	DESCRIPTION:	DATE:

PROFESSIONAL ENGINEER
STEVEN C. EARL
318575-2202
3/19/25
STATE OF UTAH

SHEET DESCRIPTION: DEMO PLAN

AIS RESIDENTIAL FACILITY
2574 SOUTH REDWOOD ROAD
WEST VALLEY CITY, UT 84119

Cache • Landmark
Engineers
Surveyors
Planners
95 Golf Course Rd.
Suite 101
Logan, UT 84321
435.713.0099

DATE: 19 MARCH 2025
SCALE: 1" = 10'
DESIGN BY: J. JENSEN
CHECKED BY: S. EARL
APPROVED BY: S. EARL
PROJECT NUMBER: 570-2402
SHEET: C-1.0

PLOTTED: March 18, 2025 BY: Jeremy Jensen FILE: Z:\2024 PROJECTS\570-2402 EKOLD ARCHITECTURE - WEST VALLEY CITY - RESIDENTIAL FACILITY\ACAD\CONSTRUCTION DOCUMENTS\570-2402 C-1.0 DEMO PLAN.DWG

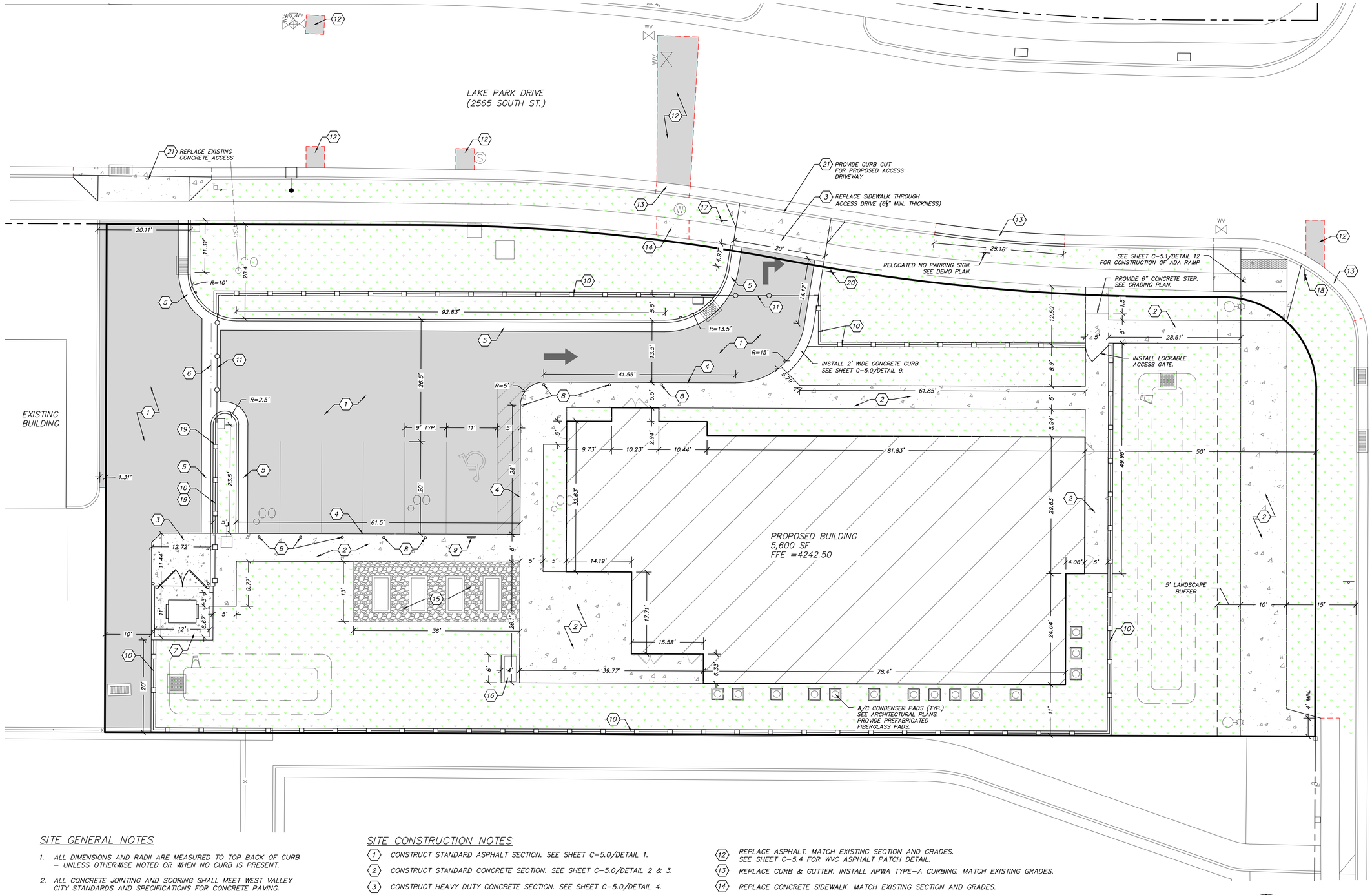

SITE GENERAL NOTES

1. ALL DIMENSIONS AND RADII ARE MEASURED TO TOP BACK OF CURB – UNLESS OTHERWISE NOTED OR WHEN NO CURB IS PRESENT.
2. ALL CONCRETE JOINTING AND SCORING SHALL MEET WEST VALLEY CITY STANDARDS AND SPECIFICATIONS FOR CONCRETE PAVING.
3. CONTRACTOR TO REFER TO GRADING PLAN FOR ALL FINISH GRADE ELEVATIONS.
4. SEE SHEET C-0.0 FOR GENERAL NOTES AND LEGEND.

SITE INFO

PROPOSED BUILDING:	5,600 SF (20.7%)
PARKING AREA (ASPHALT)	5,447 SF (20.2%)
WALKWAYS	3,670 SF (13.6%)
LANDSCAPING	12,314 SF (45.5%)
TOTAL AREA:	27,031 SF (0.62 AC)

SITE CONSTRUCTION NOTES

1. CONSTRUCT STANDARD ASPHALT SECTION. SEE SHEET C-5.0/DETAIL 1.
2. CONSTRUCT STANDARD CONCRETE SECTION. SEE SHEET C-5.0/DETAIL 2 & 3.
3. CONSTRUCT HEAVY DUTY CONCRETE SECTION. SEE SHEET C-5.0/DETAIL 4.
4. CONSTRUCT THICKENED-EDGE CONCRETE. SEE SHEET C-5.0/DETAIL 5.
5. CONSTRUCT ON-SITE CURB & GUTTER. SEE SHEET C-5.0/DETAIL 6.
6. CONSTRUCT 4' WIDE CONCRETE VALLEY GUTTER. SEE SHEET C-5.0/DETAIL 7.
7. CONSTRUCT TRASH ENCLOSURE. SEE SHEET C-5.1/DETAIL 11.
8. INSTALL BOLLARD. SEE SHEET C-5.0/DETAIL 8.
9. INSTALL ADA PARKING SIGN. SEE SHEET C-5.1/DETAIL 10.
10. INSTALL AMERISTAR ECHELON II (OR EQUIVALENT) 6' HIGH STEEL FENCE. INSTALL 12" CONCRETE CURB UNDER FENCE. SEE SHEET C-5.0/DETAIL 9.
11. INSTALL AMERISTAR TRANSPORT II (OR EQUIVALENT) TRAVERSE GATE WITH AUTOMATIC OPENER. SEE UTILITY PLAN. PROVIDE KNOX BOX AT EACH GATE FOR EMERGENCY VEHICLE ACCESS. SEE SHEET C-5.3/DETAIL 20.
12. REPLACE ASPHALT. MATCH EXISTING SECTION AND GRADES. SEE SHEET C-5.4 FOR WVC ASPHALT PATCH DETAIL.
13. REPLACE CURB & GUTTER. INSTALL APWA TYPE-A CURBING. MATCH EXISTING GRADES.
14. REPLACE CONCRETE SIDEWALK. MATCH EXISTING SECTION AND GRADES.
15. PROVIDE ¾" CRUSHED STONE WALKWAY GRAVEL, 6" THICK, IN RAISED PLANTER BOX AREA. PROVIDE STEEL EDGING ON SOUTH AND WEST SIDES OF GRAVEL. OWNER TO SUPPLY PLANTER BOXES.
16. CONSTRUCT CONCRETE PAD FOR OUTDOOR GRILL (STANDARD CONCRETE SECTION). OWNER TO SUPPLY OUTDOOR GRILL.
17. INSTALL "WRONG WAY, DO NOT ENTER" SIGN.
18. RELOCATE STOP SIGN. SEE SHEET C-5.1/DETAIL 12.
19. INSTALL "NO PARKING, TOW-AWAY ZONE" SIGN ON FENCE. COORDINATE WITH OWNER.
20. INSTALL "RIGHT TURN ONLY" SIGN.
21. INSTALL CONCRETE DRIVEWAY ACCESS PER APWA PLAN 221.1 (WEST ACCCESS) OR APWA PLAN 222 (EAST ACCESS).

SITE PLAN

0 5' 10' 20'

GRAPHIC SCALE 1"= 10'

PERMIT SET

NO.	DATE:	DESCRIPTION:

PROFESSIONAL ENGINEER
STEVEN C. EARL
318575-2202
3/19/25
STATE OF UTAH

SHEET DESCRIPTION:

SITE PLAN

AIS RESIDENTIAL FACILITY
2574 SOUTH REDWOOD ROAD
WEST VALLEY CITY, UT 84119

C·L
Cache • Landmark
Engineers
Surveyors
Planners
95 Golf Course Rd.
Suite 101
Logan, UT 84321
435.713.0099

DATE: 19 MARCH 2025
SCALE: 1" = 10'
DESIGN BY: J. JENSEN
CHECKED BY: S. EARL
APPROVED BY: S. EARL
PROJECT NUMBER: 570-2402
SHEET: C-2.0

PLOTTED: March 18, 2025 BY: Jeremy Jensen FILE: Z:\2024 PROJECTS\570-2402 DEVOLD ARCHITECTURE - WEST VALLEY CITY - RESIDENTIAL FACILITY\ACAD\CONSTRUCTION DOCUMENTS\570-2402 C-2.0 SITE PLAN.DWG

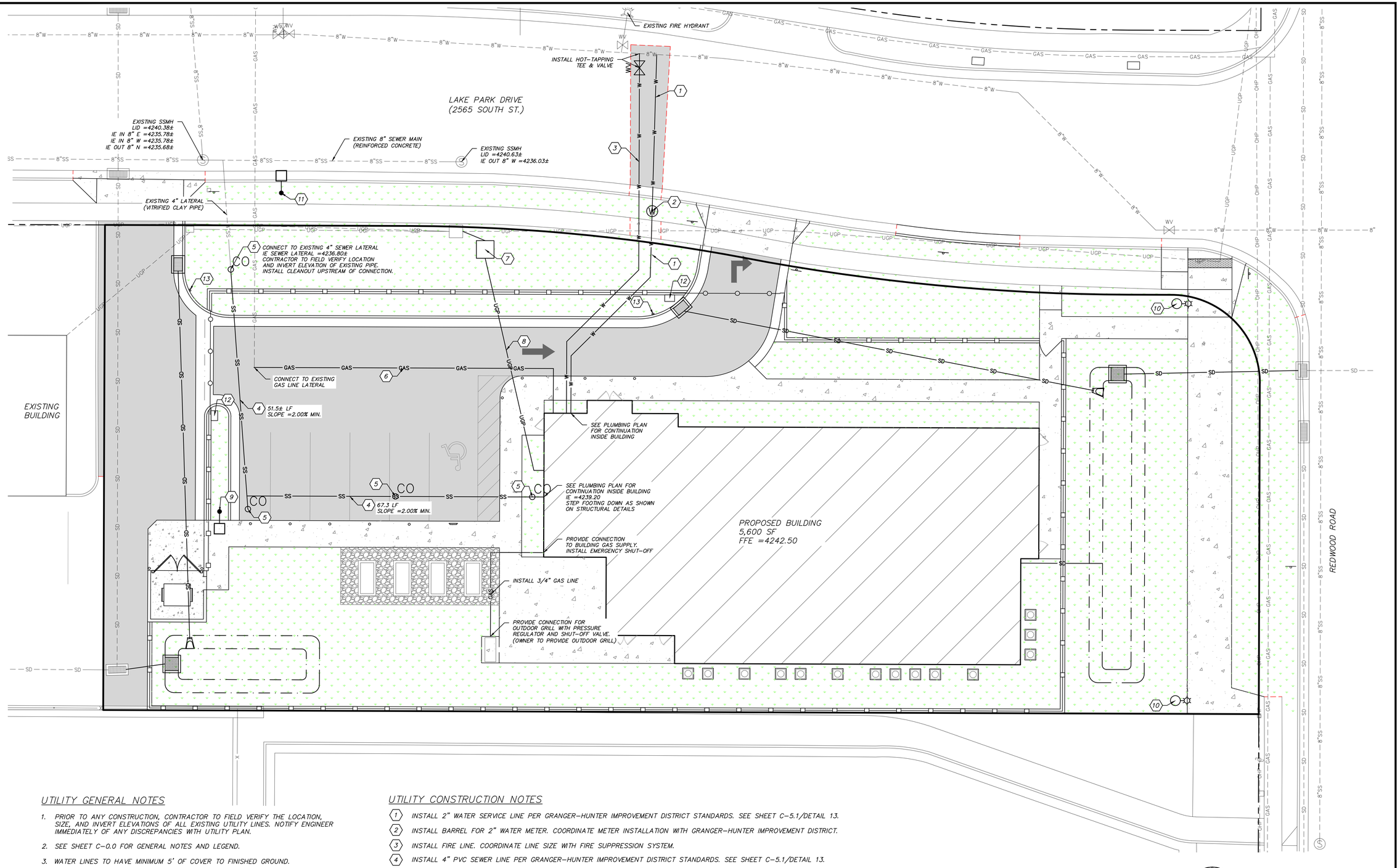

UTILITY GENERAL NOTES

1. PRIOR TO ANY CONSTRUCTION, CONTRACTOR TO FIELD VERIFY THE LOCATION, SIZE, AND INVERT ELEVATIONS OF ALL EXISTING UTILITY LINES. NOTIFY ENGINEER IMMEDIATELY OF ANY DISCREPANCIES WITH UTILITY PLAN.
2. SEE SHEET C-0.0 FOR GENERAL NOTES AND LEGEND.
3. WATER LINES TO HAVE MINIMUM 5' OF COVER TO FINISHED GROUND.
4. WATER AND SEWER LINES TO COMPLY WITH ALL CURRENT GRANGER-HUNTER IMPROVEMENT DISTRICT STANDARDS AND SPECIFICATIONS.
5. PROJECT SHALL COMPLY WITH ALL CURRENT UTAH STATE PLUMBING CODES, AMENDMENTS, AND UTAH ADMIN. CODE R 309-105-12-(1) RULES AND REGULATIONS INCLUDING, BUT NOT LIMITED TO, THOSE PERTAINING TO BACKFLOW PROTECTION AND CROSS CONNECTION PREVENTION DURING AND AFTER CONSTRUCTION.
6. ALL FIRE LINES WITHIN GHID BOUNDARIES MUST COMPLY WITH THE INTERNATIONAL PLUMBING CODE, SECTION 608 PROTECTION OF POTABLE WATER SUPPLY. GHID REQUIRES TESTABLE BACKFLOW ASSEMBLIES ON ALL CONNECTIONS CONSIDERED A CROSS-CONNECTION.
7. OWNER IS RESPONSIBLE TO SUBMIT BACKFLOW REPORTS TO GHID WATER QUALITY DEPARTMENT WITHIN 10 DAYS OF INITIAL USE AND ANNUALLY THEREAFTER.

UTILITY CONSTRUCTION NOTES

1. INSTALL 2" WATER SERVICE LINE PER GRANGER-HUNTER IMPROVEMENT DISTRICT STANDARDS. SEE SHEET C-5.1/DETAIL 13.
2. INSTALL BARREL FOR 2" WATER METER. COORDINATE METER INSTALLATION WITH GRANGER-HUNTER IMPROVEMENT DISTRICT.
3. INSTALL FIRE LINE. COORDINATE LINE SIZE WITH FIRE SUPPRESSION SYSTEM.
4. INSTALL 4" PVC SEWER LINE PER GRANGER-HUNTER IMPROVEMENT DISTRICT STANDARDS. SEE SHEET C-5.1/DETAIL 13.
5. INSTALL SEWER LINE CLEANOUT WITHIN 5' OF BUILDING, EVERY 60' ALONG SEWER LATERAL, AND AT CHANGE IN DIRECTION. SEE SHEET C-5.2/DETAIL 14.
6. INSTALL GAS LINE. COORDINATE WITH ENBRIDGE GAS.
7. INSTALL POWER TRANSFORMER. COORDINATE WITH ROCKY MOUNTAIN POWER. SEE ELECTRICAL PLAN.
8. INSTALL UNDERGROUND POWER LINE CONDUIT. COORDINATE WITH ROCKY MOUNTAIN POWER. SEE ELECTRICAL PLAN.
9. INSTALL ON-SITE LIGHT POLE. SEE ELECTRICAL PLAN.
10. INSTALL LIGHT POLE IN REDWOOD ROAD LANDSCAPE AREA PER WEST VALLEY CITY CODE 7-10-204, FIGURE 4. STREETSCAPE LIGHTING A, STANDARD DRAWING LP-05. SEE ELECTRICAL PLAN.
11. INSTALL RESIDENTIAL STREET LIGHT, WVC STANDARD DRAWING LP-01. SEE SHEET C-5.4 AND ELECTRICAL PLANS.
12. INSTALL AUTOMATIC SLIDING GATE OPENER. SEE ELECTRICAL PLANS.
13. INSTALL AUTOMATIC SLIDING GATE CONTROL/ACCESS PAD. SEE ELECTRICAL PLANS.

GHID GREASE INTERCEPTOR NOTE

1. AT THE TIME OF THE GHID FINAL REVIEW OF THESE PLANS, THIS PROJECT WAS NOT CATEGORIZED AS AN INDUSTRIAL USER. IF IN THE FUTURE THIS PROJECT IS MODIFIED, OR IT'S USE CHANGED GHID MAY REQUIRE INFRASTRUCTURE TO BE INSTALLED AT THE SOLE COST OF THE OWNER. DISCHARGERS OF FATS, OILS, GREASES, SANDS, ETC. SHALL BE CONNECTED TO AN OUTDOOR, 1000 GALLON (MINIMUM), GREASE INTERCEPTOR AND SAMPLING MANHOLE. ONLY ONE SAMPLING MANHOLE IS ALLOWED PER PARCEL OWNER, OR CULINARY WATER METER AND BILL..

UTILITY PLAN

0 5' 10' 20'

GRAPHIC SCALE 1"= 10'

PERMIT SET

NO.	DATE:	DESCRIPTION:

PROFESSIONAL ENGINEER
STEVEN C. EARL
318575-2202
3/19/25
STATE OF UTAH

SHEET DESCRIPTION:

UTILITY PLAN

AIS RESIDENTIAL FACILITY
2574 SOUTH REDWOOD ROAD
WEST VALLEY CITY, UT 84119

C·L
Cache • Landmark
Engineers
Surveyors
Planners
95 Golf Course Rd.
Suite 101
Logan, UT 84321
435.713.0099

DATE:	19 MARCH 2025
SCALE:	1"=10'
DESIGN BY:	J. JENSEN
CHECKED BY:	S. EARL
APPROVED BY:	S. EARL
PROJECT NUMBER:	570-2402
SHEET:	C-3.0

PLOTTED March 18, 2025 BY Jeremy Jensen FILE Z:\2024 PROJECTS\570-2402 DEKOLD ARCHITECTURE - WEST VALLEY CITY - RESIDENTIAL FACILITY\ACAD\CONSTRUCTION DOCUMENTS\570-2402 C-3.0 UTILITY PLAN.DWG

LAKE PARK DRIVE
(2565 SOUTH ST.)

EXISTING BUILDING

PROPOSED BUILDING
5,600 SF
FFE =4242.50

REDWOOD ROAD

INSTALL SD INLET BOX #1 (2'X3')
GRATE =4240.60
IE OUT 12" S =4238.10
SUMP =4237.10

INSTALL SD INLET BOX #3 (2'X3')
GRATE =4241.62
IE OUT 12" E =4239.12
SUMP =4238.12

INSTALL 12" HPPP SD PIPE
93.9 LF
SLOPE =0.30%

INSTALL BMP 18-F SNOUT OVER OUTLET PIPE

INSTALL SD INLET BOX #4 (3'X3')
GRATE =4241.00
IE OUT 15" E =4238.00
SUMP =4235.00

EXISTING SD CURB INLET BOX #E-2 (2'X3')
CORE DRILL INTO BOX FOR
INSTALLATION OF PROPOSED 15" PIPE
GRATE =4241.45
IE IN 15" W =4235.62 (PROPOSED)
IE IN 18" N =4235.12± (EXISTING)
IE IN 18" E =4235.12± (EXISTING)
IE OUT 18" S =4235.08± (EXISTING)

INSTALL 15" RCP SD PIPE
39.5 LF
SLOPE =5.67%

INSTALL FLARED END W/ TRASH RACK
IE =4238.83
PROVIDE 1' MIN. CLEAR SPACE
AROUND END OF PIPE

CONSTRUCT STORMWATER POND #2
650 CF
BOTTOM OF POND =4240.00
MAX. WATER ELEV. =4241.00
TOP OF FREEBOARD =4242.00

TOP OF FREEBOARD
MAX. WATER LEVEL
BOTTOM OF POND
IE =4240.00

CONNECT TO ROOF DRAIN
SEE PLUMBING PLAN

INSTALL 4" HPPP SD PIPE
18.5 LF
SLOPE =1.00% MIN.

INSTALL 12" HPPP SD PIPE
83.4 LF
SLOPE =0.30%

EXISTING SD PIPE

INSTALL FLARED END W/ TRASH RACK
IE =4237.85
PROVIDE 1' MIN. CLEAR SPACE
AROUND END OF PIPE

INSTALL SD INLET BOX #2 (3'X3')
GRATE =4240.00
IE OUT 12" W =4237.46
INSTALL BMP 18-F SNOUT OVER OUTLET PIPE
SUMP =4234.46

INSTALL 12" HPPP SD PIPE
9.4 LF
SLOPE =0.50%

EXISTING SD PIPE

CONSTRUCT STORMWATER POND #1
325 CF
BOTTOM OF POND =4239.00
MAX. WATER ELEV. =4240.00
TOP OF FREEBOARD =4241.00

BOTTOM OF POND
MAX. WATER LEVEL
TOP OF FREEBOARD

EXISTING SD INLET BOX #E-1 (2'X4')
CONTRACTOR TO CLEAN OUT MUD,
SILT, AND DEBRIS FROM INSIDE OF BOX.
CORE DRILL INTO BOX FOR
INSTALLATION OF PROPOSED 12" PIPE
GRATE =4240.39
IE IN 12" E =4237.40 (PROPOSED)
IE IN 18" N =4237.49± (EXISTING)
IE OUT 18" W =4237.36± (EXISTING)

STORM WATER DESIGN:

PROJECT AREA	0.62 AC.
RETENTION REQUIREMENT FOR 80TH PERCENTILE STORM (0.43 IN/AC)	968 CU. FT.
PRECIPITATION (10 YR/24 HR)	1.75 IN.
POST-DEVELOPMENT DETENTION CALCULATIONS	
IMPERVIOUS AREA	0.35 AC.
CN	98.0
PERVIOUS AREA	0.27 AC.
CN	74
TOTAL AREA	0.62 AC.
CN	87.6
DIRECT RUNOFF (10 YR/24 HR)	0.74 IN.
WVC STORM DRAIN RELEASE RATE DESIGNATION FOR SITE	UNDETAINED
TOTAL RETENTION VOLUME PROVIDED	975 CU. FT.

SEE SHEET C-3.2 FOR WVC DRAINAGE REPORT

STORMWATER GENERAL NOTES

1. ALL ON-SITE STORM DRAIN PIPE TO BE HIGH PERFORMANCE POLYPROPYLENE PIPE (EXCEPTION NOTED).
2. STORM DRAIN PIPE TO HAVE MINIMUM COVER OF 12" FROM TOP OF PIPE TO FINISHED GROUND.
3. SEE GRADING PLAN FOR ALL FINISH GRADE ELEVATIONS.
4. SEE SHEET C-0.0 FOR GENERAL NOTES AND LEGEND.
5. SEE SHEET C-5.2/DETAIL 15 FOR SD PIPE SECTION.
6. SEE SHEET C-5.2/DETAIL 16 FOR 2'X3' SD INLET BOX DETAIL.
7. SEE SHEET C-5.2/DETAIL 17 FOR 3'X3' SD INLET BOX DETAIL.
8. SEE SHEET C-5.2/DETAIL 18 FOR BMP 18-F STORM DRAIN SNOUT.
9. SEE SHEET C-5.3/DETAIL 19 FOR SD POND DETAIL.

STORMWATER PLAN

0 5' 10' 20'
GRAPHIC SCALE 1"= 10'

PERMIT SET

NO. | DATE: | DESCRIPTION:

PROFESSIONAL ENGINEER
STEVEN C. EARL
318575-2202
3/19/25
STATE OF UTAH

SHEET DESCRIPTION:
STORMWATER PLAN

AIS RESIDENTIAL FACILITY
2574 SOUTH REDWOOD ROAD
WEST VALLEY CITY, UT 84119

Cache • Landmark
Engineers
Surveyors
Planners
95 Golf Course Rd.
Suite 101
Logan, UT 84321
435.713.0099

DATE: 19 MARCH 2025
SCALE: 1" = 10'
DESIGN BY: J. JENSEN
CHECKED BY: S. EARL
APPROVED BY: S. EARL
PROJECT NUMBER: 570-2402
SHEET: C-3.1

PLOTTED March 18, 2025 BY Jeremy Jensen FILE Z:\2024 PROJECTS\570-2402 DEKOLD ARCHITECTURE - WEST VALLEY CITY - RESIDENTIAL FACILITY\CAD\CONSTRUCTION DOCUMENTS\570-2402 C-3.0 UTILITY PLAN.DWG

DRAINAGE REPORT NARRATIVE:

1. PROJECT AREA/LAND DISTURBANCE THRESHOLD:

THE TOTAL PROJECT AREA IS 0.62 AC, WHICH IS BELOW THE 1.0 AC LAND DISTURBANCE THRESHOLD DIRECTED BY THE JORDAN VALLEY MUNICIPALITIES MS4 PERMIT UTS000001. HOWEVER, AS STORM RETENTION AREAS ARE AVAILABLE ON THE SITE AND TO NOT INCREASE THE BURDEN ON WEST VALLEY CITY'S (WVC) STORMDRAIN SYSTEM, THE PROJECT WILL PROVIDE STORM WATER RETENTION ON-SITE. DUE TO GRADING ON-SITE AND ELEVATIONS OF ADJACENT PROPERTIES, IT IS NOT ANTICIPATED THAT ANY OFF-SITE STORM FLOWS WILL CONTRIBUTE ANY VOLUME TO THESE RETENTION AREAS.
SEE SHEET C-3.1 FOR ALL STORMDRAIN PLAN ELEMENTS.

2. LOW IMPACT DEVELOPMENT EVALUATION:

THE PROJECT SITE IS IDEAL FOR THE USE OF SHALLOW INFILTRATION BASINS TO REDUCE SITE RUNOFF VOLUME. LANDSCAPE AREAS ON THE SITE PROVIDE SUFFICIENT SQUARE FOOTAGE FOR THE BASINS, GROUNDWATER LEVELS ARE 6 FT BELOW THE EXISTING GROUND, AND INFILTRATION RATES ALLOW FOR COMPLETE STORMWATER INFILTRATION WITHIN THE REQUIRED 72 HOURS (SEE CALCULATIONS BELOW).
NATURAL VEGETATION IS NOT PRESENT ON THE SITE. LONG-TERM EROSION CONTROL WILL BE PROVIDED BY LANDSCAPING VEGETATION, STONE, AND MULCH TO BE INSTALLED AS PART OF THE PROJECT. EROSION CONTROL DURING CONSTRUCTION WILL BE PROVIDED BY BMP'S AS OUTLINED ON THE EROSION CONTROL PLAN (SHEET C-6.0) AND IN THE SWPPP REPORT.

3. RETENTION REQUIREMENTS CALCULATIONS:

RETENTION CALCULATIONS ARE BASED ON WVC'S ENGINEERING STANDARD DEPTH OF 0.43 IN. FOR THE 80TH PERCENTILE STORM. TOTAL RETENTION VOLUME FOR THE SITE BASED ON THIS DEPTH IS 968 CU. FT. THIS VOLUME IS PROVIDED BY THE TWO PROPOSED RETENTION BASINS AS SHOWN ON SHEET C-3.1. CALCULATIONS TO SHOW THE INFILTRATION OF THESE BASINS WITHIN 72 HOURS IS AS FOLLOWS:

STORMWATER INFILTRATION CALCULATIONS

INFILTRATION RATE FROM SOILS REPORT	27 MIN./IN.
MAX. STORMWATER POND DEPTH	12 IN.
MAX. STORMWATER INFILTRATION TIME	5.4 HRS.
SUBSURFACE WATER DEPTH	6 FT BELOW EXISTING GRADE

4. DETENTION CALCULATIONS:

THE PROJECT SITE IS DESIGNATED AS AN UNDETAINED AREA. SEE STORM DRAIN RELEASE RATE MAP HEREON.

5. WATER QUALITY AND TARGETED POLLUTANTS

POTENTIAL POLLUTANTS FROM THE SITE ARE ANTICIPATED TO BE FROM VEHICLES PARKED AT THE RESIDENCE AND FROM LANDSCAPE MAINTENANCE ON-SITE. POLLUTANTS FROM VEHICLES ARE PRIMARILY ANTICIPATED TO BE OIL AND GREASE FALLING ONTO THE PARKING LOT ASPHALT FROM POORLY MAINTAINED VEHICLES AND WASHED INTO THE STORMDRAIN SYSTEM DURING RAIN EVENTS OR SNOW MELT. POLLUTANTS FROM LANDSCAPE MAINTENANCE ARE ANTICIPATED TO BE NUTRIENTS AND PESTICIDES FROM INCORRECTLY USED FERTILIZER OR PESTICIDE APPLICATIONS. ALL OF THESE POLLUTANTS ARE ANTICIPATED TO BE MINOR AND IN RELATIVELY SMALL QUANTITIES. SEDIMENT IS ANTICIPATED TO BE MINIMAL DUE TO THE FINISHED LANDSCAPE PLAN FOR THE SITE.
ALL STORMWATER BEYOND THE RETENTION REQUIREMENTS WILL BE RELEASED FROM THE INFILTRATION PONDS THROUGH 3'X3' STORM DRAIN BOXES WITH BMP 18-F SNOUTS INSTALLED OVER THE OUTLET PIPES. THESE SNOUTS ARE DESIGNED SPECIFICALLY TO REDUCE OIL, GREASE, AND SEDIMENT LOADS IN STORM WATER.

6. HYDROLOGIC ANALYSIS

HYDROLOGIC ANALYSIS OF THE SITE WAS CALCULATED USING AUTODESK STORM AND SANITARY ANALYSIS. RAINFALL CALCULATIONS WERE BASED ON SCS TYPE II DISTRIBUTION FOR A 10YR/24HR STORM FOR SALT LAKE COUNTY UTAH. THESE CALCULATIONS ARE SHOWN HEREON.

7. PIPE SIZING REQUIREMENTS

PEAK RUNOFF RATE WAS CALCULATED FROM HYDROLOGIC ANALYSIS AS SHOWN ABOVE. PIPE FLOW RATES WERE CALCULATED USING MANNING'S FORMULA FOR UNIFORM PIPE FLOW. ALL STORM DRAIN PIPES ON-SITE ARE SUFFICIENT TO HANDLE VOLUMES GREATER THAN THE PEAK RUNOFF RATE. CALCULATIONS ARE AS FOLLOWS:

PIPE FLOW CALCULATIONS

PEAK RUNOFF RATE	0.64 CFS
12-IN. PIPE FLOW RATE (90% FULL)	2.70 CFS
15-IN. PIPE FLOW RATE (90% FULL)	21.3 CFS



WVC STORM DRAIN RELEASE RATE MAP

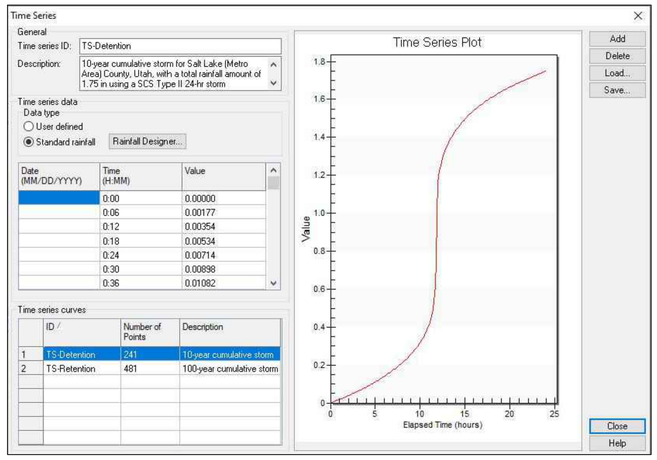

STORM & SANITARY-TIME SERIES PLOT

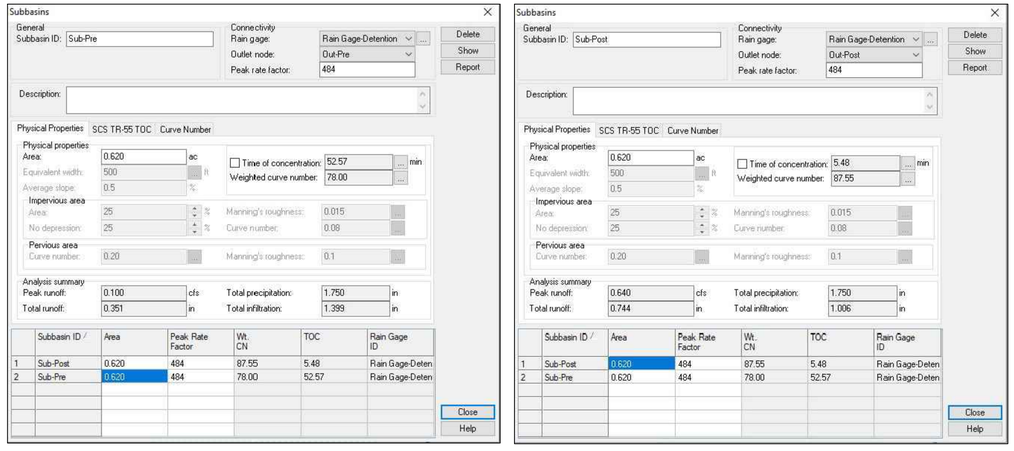

STORM & SANITARY ANALYSIS-PRE & POST CONSTRUCTION

PERMIT SET

PLOTTED: March 18, 2025 BY: Jeremy Jensen FILE: J:\2024 PROJECTS\570-2402 DEKOLD ARCHITECTURE - WEST VALLEY CITY - RESIDENTIAL FACILITY\CAD\CONSTRUCTION DOCUMENTS\570-2402 C-3.0 UTILITY PLAN.DWG

NO. | DATE: | DESCRIPTION:

PROFESSIONAL ENGINEER
STEVEN C. EARL
318575-2202
3/19/25
STATE OF UTAH

SHEET DESCRIPTION: DRAINAGE REPORT

AIS RESIDENTIAL FACILITY
2574 SOUTH REDWOOD ROAD
WEST VALLEY CITY, UT 84119

Cache • Landmark
Engineers
Surveyors
Planners
95 Golf Course Rd.
Suite 101
Logan, UT 84321
435.713.0099

DATE: 19 MARCH 2025
SCALE: 1" = 10'
DESIGN BY: J. JENSEN
CHECKED BY: S. EARL
APPROVED BY: S. EARL
PROJECT NUMBER: 570-2402
SHEET: C-3.2

LAKE PARK DRIVE
(2565 SOUTH ST.)

REDWOOD ROAD

EXISTING BUILDING

PROPOSED BUILDING
5,600 SF
FFE =4242.50

WORKPOINT BENCHMARK
ELEV. =4240.66

GRADEBREAK LINE (TYP.)

ASPHALT RIDGE

SWALE =0.50%

SWALE =1.81%

SWALE =1.50%

SWALE =0.40%

SWALE =0.40%

6" CONC. STEP

FG SWALE HP: 4241.95

FG SWALE: 4241.00

FG SWALE: 4241.62

FG SWALE: 4241.75

FG SWALE: 4241.79

TA MATCH: 4240.74±
TA RIDGE: 4240.96
TA: 4240.85
TA MATCH: 4241.10±
TA MATCH: 4241.08±
TA RIDGE: 4241.25
TA MATCH: 4240.69
TA MATCH: 4240.38±
TA: 4240.39
TA MATCH: 4241.04±
TA: 4241.05

TBC: 4241.13
TBC: 4241.18
TBC: 4241.24
TBC: 4241.32
TBC: 4241.38
TBC: 4241.35
TBC: 4241.49
TBC: 4241.54
TBC: 4241.65
TBC: 4241.68
TBC: 4241.80
TBC GB: 4242.56
TBC HP: 4242.61

TC: 4241.30
TC: 4241.03
TC: 4241.26
TC: 4241.05
TC: 4241.26
TC: 4241.40
TC: 4241.47
TC: 4241.60
TC: 4241.39
TC: 4241.20
FG: 4241.60

TC=TA: 4242.32
TC=TA: 4242.39
TC=TA: 4242.44
TC=TA: 4242.30
TC=TA: 4242.30
TC: 4242.50
TC: 4242.50
TC: 4242.40
TC: 4242.00
TC: 4241.93
TC: 4241.99
FG: 4241.99
FG: 4242.00
TC: 4242.14
TC: 4242.06
TC: 4242.00
TC: 4242.36
TC: 4242.41
TC: 4242.35
TC GB: 4242.40
TC GB: 4242.34
TC GB: 4242.31
TC GB: 4242.30
TC GB: 4242.26

TC=TA: 4241.77
TC=TA: 4242.19
TC=TA: 4242.32
TC=TA: 4242.39
TC: 4242.28
TC: 4242.45
TC GB: 4242.38
TC: 4242.50
TC: 4242.39
TC: 4242.00
FG: 4242.00

TC MATCH EXISTING: 4241.21±
TC MATCH EXISTING: 4241.49±
TC MATCH EXISTING: 4241.45±
TC MATCH EXISTING: 4241.50±
TC MATCH EXISTING: 4241.53±
TC: 4241.63
TC: 4242.13
TC: 4242.23
TC: 4241.52
TC: 4242.03
TC: 4242.13
TC GB: 4241.89
TC GB: 4241.99
TC: 4242.28
TC: 4242.18
TC: 4242.28
TC: 4242.40
TC: 4242.38
TC: 4242.50
TC: 4242.50
FG: 4242.50
TC: 4242.40
TC GB: 4241.07
TC GB: 4241.15
TC GB: 4241.20
TC GB: 4241.66
TC GB: 4241.66
TC GB: 4241.76
TC GB: 4241.76
TC GB: 4242.29
TC GB: 4242.49
TC: 4242.65
TC: 4242.75
TC: 4242.56
TC: 4242.78
TC MATCH EXISTING: 4242.40±

GRADING GENERAL NOTES

1. CONTRACTOR SHALL MATCH GRADES AT EXISTING CONCRETE AND ASPHALT.
2. TYPICAL CONTOUR INTERVAL IS 0.5' FOR EXISTING AND 0.5' FOR PROPOSED.
3. ALL SLOPE ARROWS ARE ORIENTED TOWARD THE DIRECTION OF WATER FLOW ON THE SURFACE.
4. CROSS-SLOPE ON SIDEWALKS NOT TO EXCEED 2.0%.
5. SLOPES IN ADA AREAS NOT TO EXCEED 2.0% IN ANY DIRECTION.
6. SEE SHEET C-0.0 FOR GENERAL NOTES AND LEGEND.
7. SEE SHEET C-3.1 FOR STORMWATER NOTES AND ELEVATIONS.

GRADING CONSTRUCTION NOTES

(1) NO REVEAL AT EDGE OF CONCRETE. TOP OF ASPHALT TO MATCH TOP OF CONCRETE.
(2) FLARE DOWN END OF CURB WITHIN 2' OF SIDEWALK. CURB ELEVATION SHOWN IS FULL HEIGHT.
(3) SEE SHEET C-5.1/DETAIL 12 FOR GRADING OF ADA RAMP.
(4) PROVIDE LANDSCAPE BERM IN REDWOOD ROAD PARKSTRIP AREA PER WEST VALLEY CITY CODE 7-10-204.
(5) PROVIDE 3' LANDSCAPE BERM NORTH OF PARKING AREA.
(6) PROVIDE 6" REVEAL FROM EXISTING TOP OF CONCRETE CURB TO PROPOSED ASPHALT.

GRADING PLAN

0 5' 10' 20'
GRAPHIC SCALE 1"= 10'

PERMIT SET

NO. | DATE: | DESCRIPTION:

PROFESSIONAL ENGINEER
STEVEN C. EARL
318575-2202
3/19/25
STATE OF UTAH

SHEET DESCRIPTION:
GRADING PLAN

A/S RESIDENTIAL FACILITY
2574 SOUTH REDWOOD ROAD
WEST VALLEY CITY, UT 84119

Cache • Landmark
Engineers
Surveyors
Planners
95 Golf Course Rd.
Suite 101
Logan, UT 84321
435.713.0099

DATE: 19 MARCH 2025
SCALE: 1" = 10'
DESIGN BY: J. JENSEN
CHECKED BY: S. EARL
APPROVED BY: S. EARL
PROJECT NUMBER: 570-2402
SHEET: C-4.0

PLOTTED: March 18, 2025 BY: Jeremy Jensen FILE: Z:\2024 PROJECTS\570-2402 DEKOLD ARCHITECTURE - WEST VALLEY CITY - RESIDENTIAL FACILITY\CAD\CONSTRUCTION DOCUMENTS\570-2402 C-4.0 GRADING PLAN.DWG

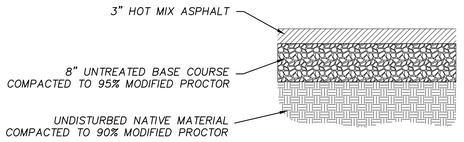

1 ASPHALT SECTION
SCALE: NTS

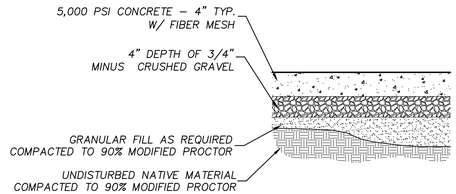

CONCRETE TO BE 5,000 PSI, 28–DAY STRENGTH
4" SLUMP, 6% AIR, W/FIBERMESH
JOINT SPACING NOT TO EXCEED 30 TIMES THICKNESS OF SLAB
JOINTS TO BE 1/4 OF THE SLAB THICKNESS

2 STANDARD CONCRETE SECTION
SCALE: NTS

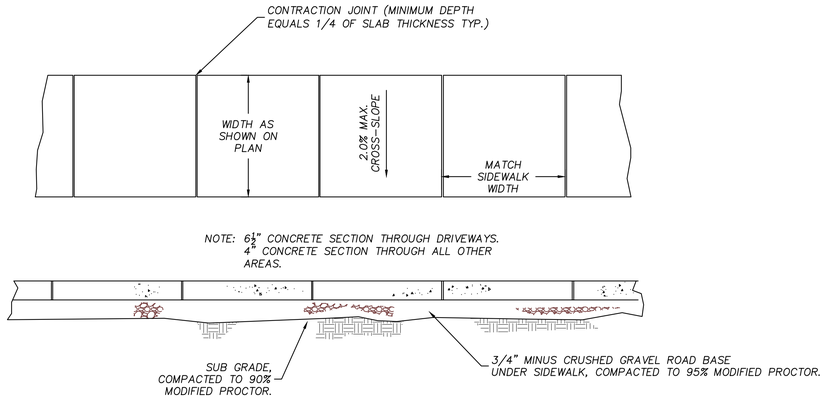

3 STANDARD SIDEWALK SECTION
SCALE: NTS

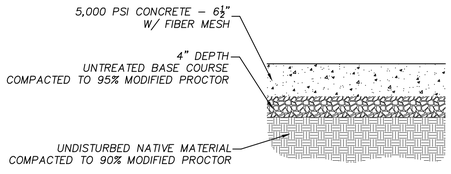

CONCRETE TO BE 5,000 PSI, 28–DAY STRENGTH
4" SLUMP, 6% AIR, W/FIBERMESH
JOINT SPACING NOT TO EXCEED 30 TIMES THICKNESS OF SLAB
JOINTS TO BE 1/4 OF THE SLAB THICKNESS

4 HEAVY DUTY CONCRETE SECTION
SCALE: NTS

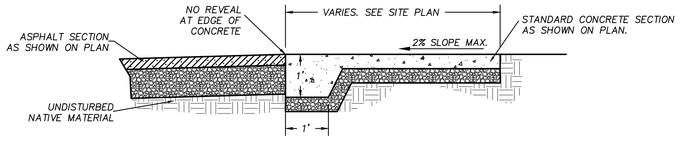

CONCRETE TO BE 5,000 PSI, 28–DAY STRENGTH
4" SLUMP, 6% AIR, W/FIBERMESH
JOINT SPACING NOT TO EXCEED 30 TIMES THICKNESS OF SLAB
JOINTS TO BE 1/4 OF THE SLAB THICKNESS

5 THICKENED EDGE CONCRETE SECTION
SCALE: NTS

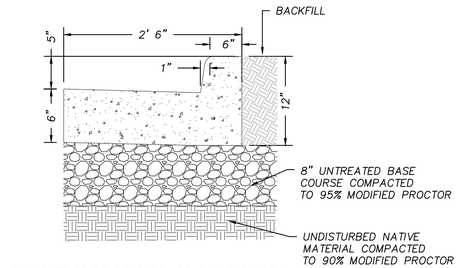

CONCRETE TO BE 5,000 PSI, 28–DAY STRENGTH
4" SLUMP, 6% AIR, W/FIBERMESH
PROVIDE CONTRACTION JOINT EVERY 10'

6 ON–SITE CURB AND GUTTER SECTION
SCALE: NTS

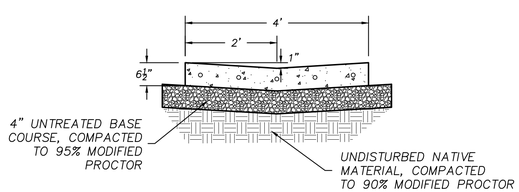

CONCRETE TO BE 5,000 PSI, 28–DAY STRENGTH
4" SLUMP, 6% AIR, W/FIBERMESH
PROVIDE CONTRACTION JOINT EVERY 10'

7 4' CONCRETE VALLEY GUTTER SECTION
SCALE: NTS

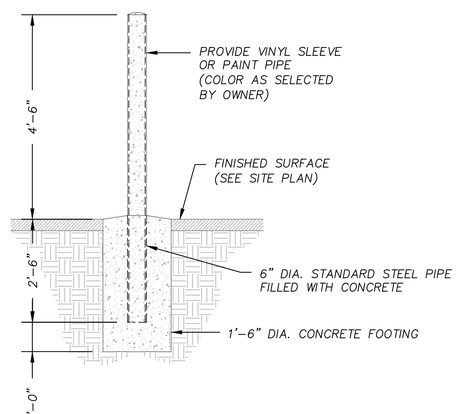

8 BOLLARD SECTION
SCALE: NTS

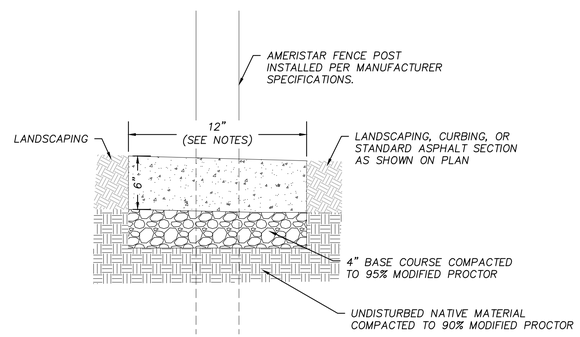

NOTES:
1. CONCRETE SHALL BE 5000 PSI – 28 DAY STRENGTH
2. PROVIDE CONTRACTION JOINTS @ 10'–0" O.C.
3. CONTRACTOR TO ENSURE STORMWATER CAN FLOW UNOBSTRUCTED OVER CONCRETE CURB. DO NOT CREATE A DAMMING EFFECT.
4. SEE SITE PLAN FOR LOCATION WHERE CURB IS TO BE 2' WIDE.

9 CONCRETE CURB SECTION
SCALE: NTS

PERMIT SET

PLOTTED: March 18, 2025 BY: Jeremy Jensen FILE: Z:\2024 PROJECTS\570–2402 DEVOLD ARCHITECTURE – WEST VALLEY CITY – RESIDENTIAL FACILITY\ACAD\CONSTRUCTION DOCUMENTS\570–2402 C–5.0 DETAIL SHEET.DWG

NO.	DATE:	DESCRIPTION:

PROFESSIONAL ENGINEER
STEVEN C. EARL
318575-2202
3/19/25
STATE OF UTAH

SHEET DESCRIPTION:
DETAIL SHEET

AIS RESIDENTIAL FACILITY
2574 SOUTH REDWOOD ROAD
WEST VALLEY CITY, UT 84119

Cache • Landmark
Engineers
Surveyors
Planners
95 Golf Course Rd.
Suite 101
Logan, UT 84321
435.713.0099

DATE:	19 MARCH 2025
SCALE:	NTS
DESIGN BY:	J. JENSEN
CHECKED BY:	S. EARL
APPROVED BY:	S. EARL
PROJECT NUMBER:	570-2402
SHEET:	C-5.0

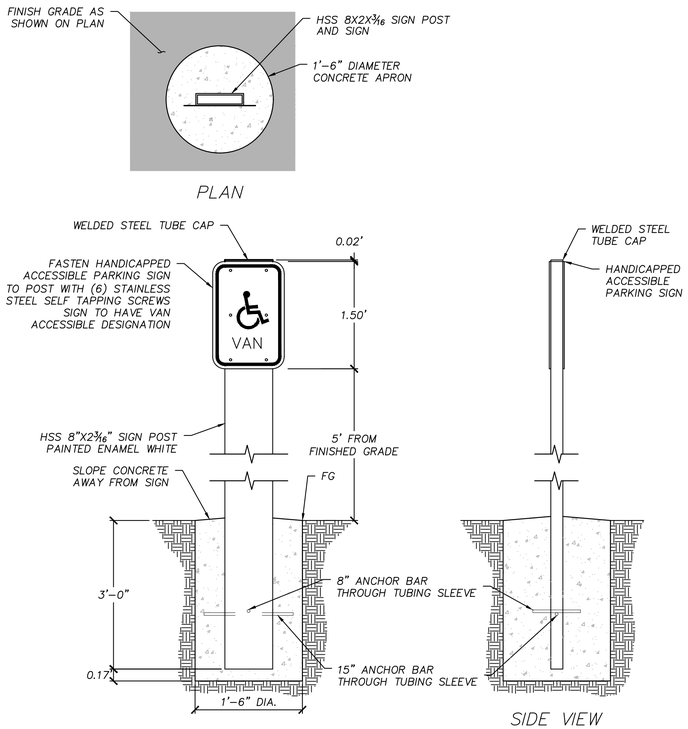

10 ADA HANDICAP PARKING SIGN
SCALE: NTS

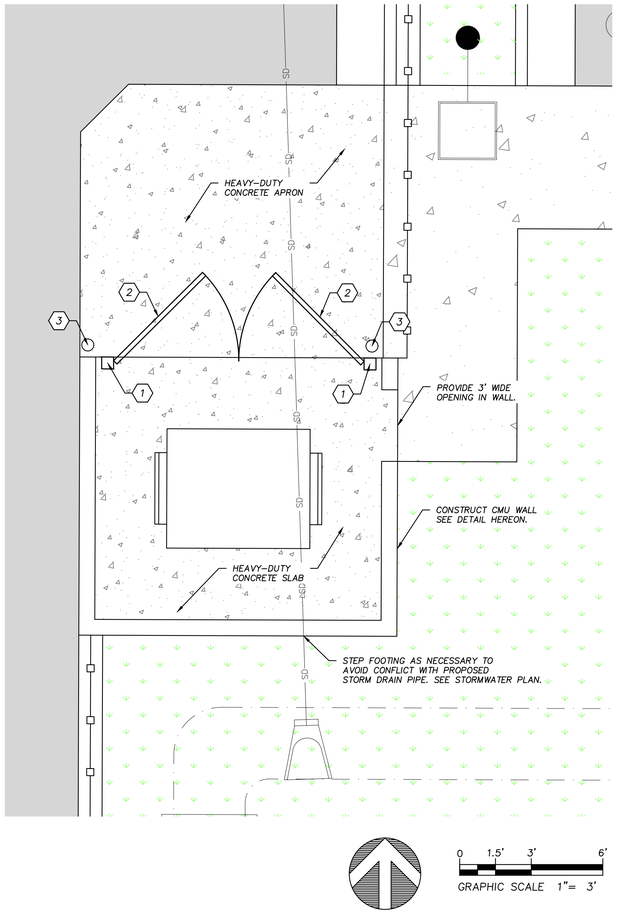

11 TRASH ENCLOSURE DETAILS
SCALE: NTS

TRASH ENCLOSURE NOTES

1. INSTALL STEEL GATE POST. COLOR AND TYPE TO MATCH ENCLOSURE GATES.
2. INSTALL SOLID METAL ENCLOSURE GATES. TYPE AND COLOR AS SELECTED BY OWNER AND TO MATCH BUILDING. INSTALL LOCKING HASPS ON GATES. INSTALL DROP ROD ON EACH GATE (1" DIA. X 2' LONG WITH 90° BEND). DRILL HOLES IN CONCRETE APRON FOR DROP RODS TO ALLOW GATES TO BE LOCKED IN A FULLY OPEN POSITION DURING TRASH COLLECTION.
3. INSTALL BOLLARD. SEE SHEET C-5.0/DETAIL 8.

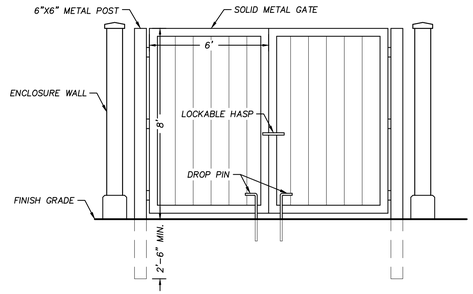

ENCLOSURE GATES

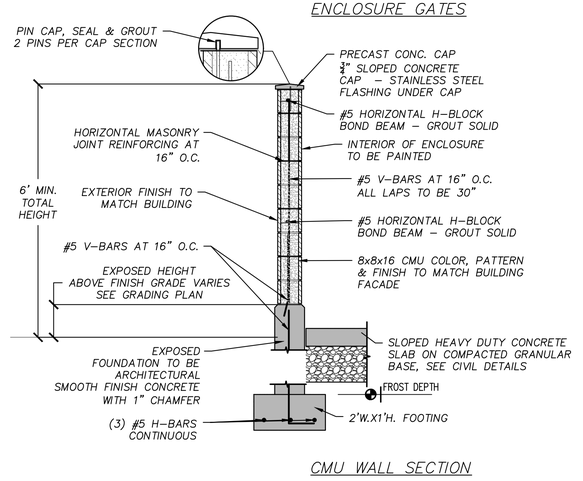

CMU WALL SECTION

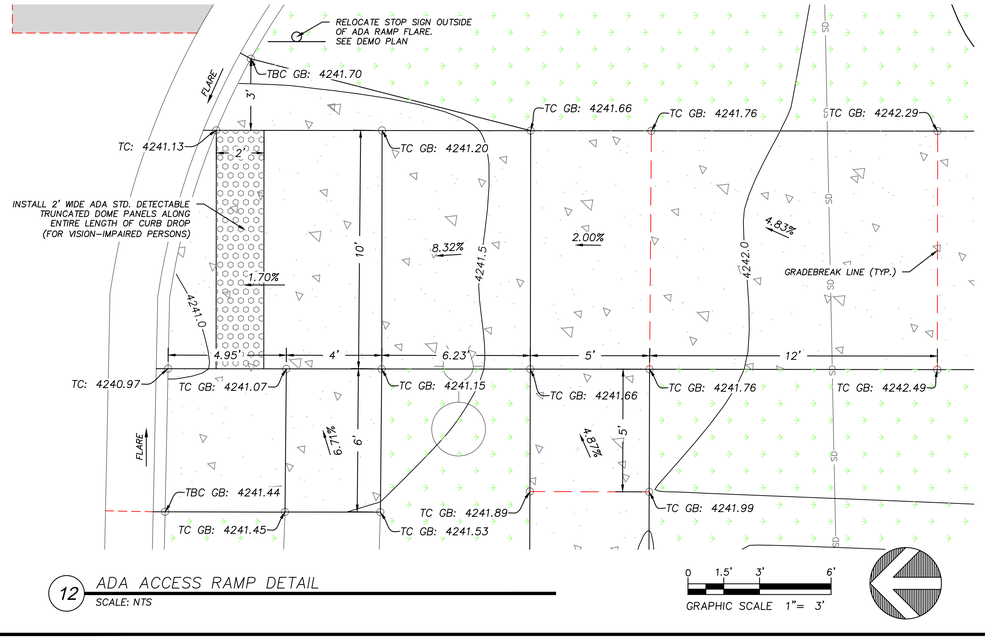

12 ADA ACCESS RAMP DETAIL
SCALE: NTS

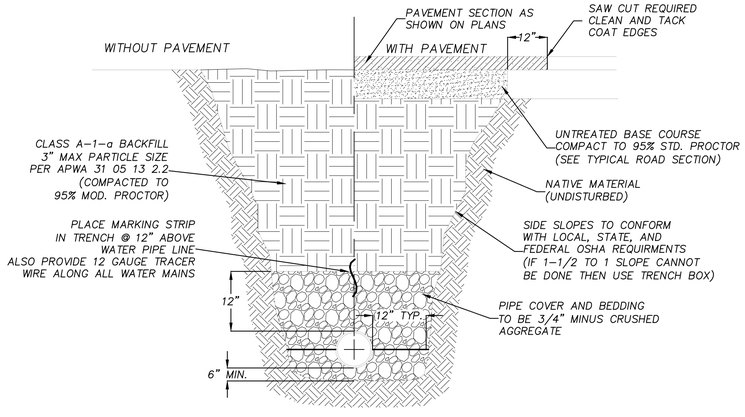

13 UTILITY PIPE SECTION
SCALE: NTS

PERMIT SET

DESCRIPTION:
NO.:
DATE:

STEVEN C. EARL
318575-2202
3/19/25
PROFESSIONAL ENGINEER
STATE OF UTAH

SHEET DESCRIPTION: DETAIL SHEET

AIS RESIDENTIAL FACILITY
2574 SOUTH REDWOOD ROAD
WEST VALLEY CITY, UT 84119

Cache • Landmark
Engineers
Surveyors
Planners
95 Golf Course Rd.
Suite 101
Logan, UT 84321
435.713.0099

DATE: 19 MARCH 2025
SCALE: NTS
DESIGN BY: J. JENSEN
CHECKED BY: S. EARL
APPROVED BY: S. EARL
PROJECT NUMBER: 570-2402
SHEET: C-5.1

PLOTTED March 18, 2025 BY Jeremy Jensen FILE J:\2024 PROJECTS\570-2402 DEKOLD ARCHITECTURE - WEST VALLEY CITY - RESIDENTIAL FACILITY\CAD\CONSTRUCTION DOCUMENTS\570-2402 C-5.0 DETAIL SHEET.DWG

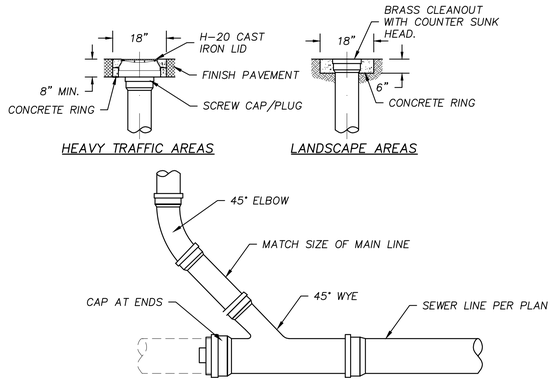

14 SEWER LINE CLEANOUT
SCALE: NTS

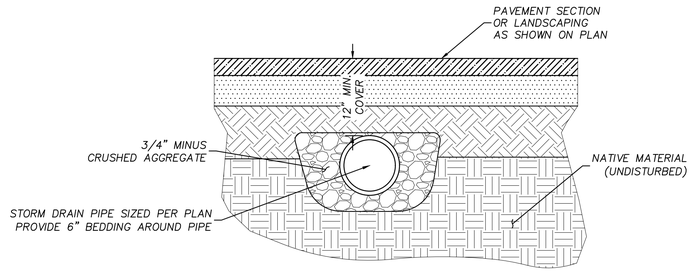

15 STORM DRAIN PIPE SECTION
SCALE: NTS

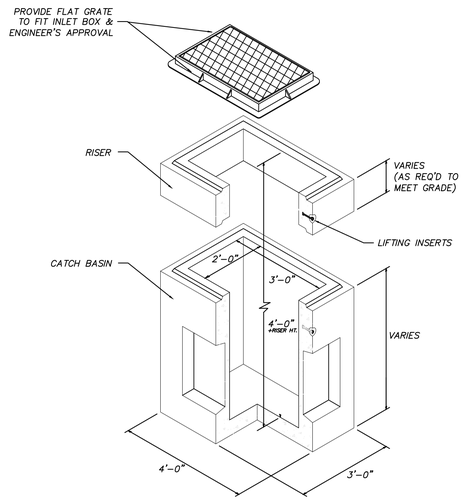

16 2'X3' STORM DRAIN INLET BOX
SCALE: NTS

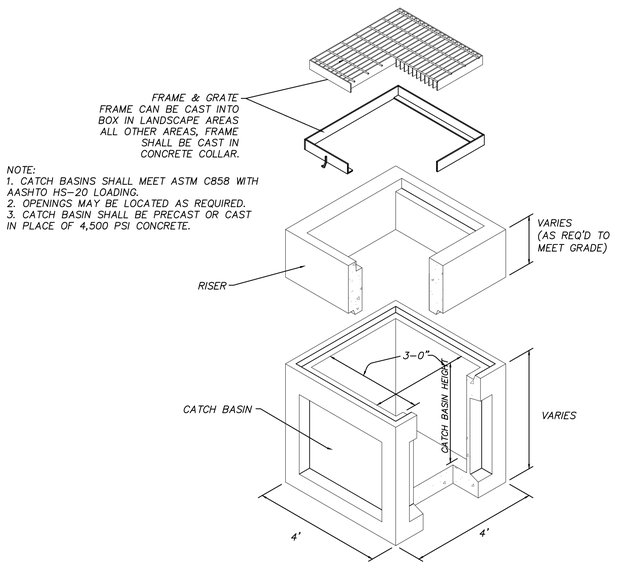

17 3'X3' STORM DRAIN INLET BOX
SCALE: NTS

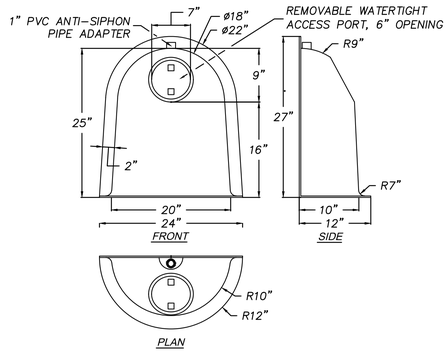

18 BMP 18-F STORM DRAIN SNOUT
SCALE: NTS

PERMIT SET

NO.	DATE:	DESCRIPTION:

PROFESSIONAL ENGINEER
STEVEN C. EARL
318575-2202
3/19/25
STATE OF UTAH

SHEET DESCRIPTION:
DETAIL SHEET

AIS RESIDENTIAL FACILITY
2574 SOUTH REDWOOD ROAD
WEST VALLEY CITY, UT 84119

Cache • Landmark
Engineers
Surveyors
Planners
95 Golf Course Rd.
Suite 101
Logan, UT 84321
435.713.0099

DATE: 19 MARCH 2025
SCALE: NTS
DESIGN BY: J. JENSEN
CHECKED BY: S. EARL
APPROVED BY: S. EARL
PROJECT NUMBER: 570-2402
SHEET: C-5.2

PLOTTED March 18, 2025 BY Jeremy Jensen FILE Z:\2024 PROJECTS\570-2402 DEKOLD ARCHITECTURE - WEST VALLEY CITY - RESIDENTIAL FACILITY\ACAD\CONSTRUCTION DOCUMENTS\570-2402 C-5.0 DETAIL SHEET.DWG

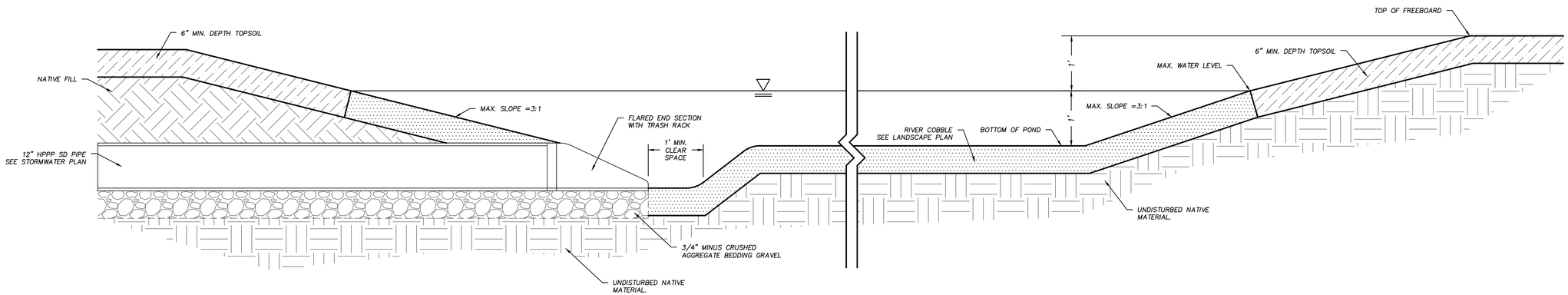

19 STORMWATER POND SECTION

SCALE: NTS

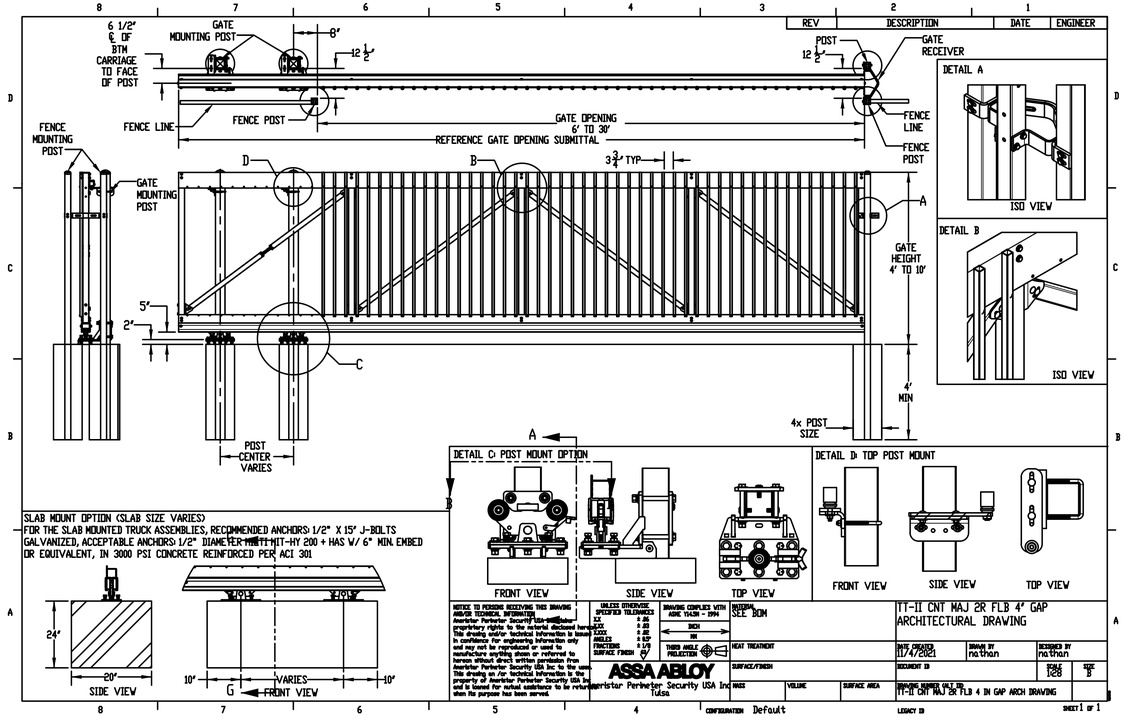

AMERISTAR DETAIL SHEET
OWNER TO PROVIDE FINAL SELECTION ON STYLE OF GATE (MAJESTIC STYLE SHOWN)

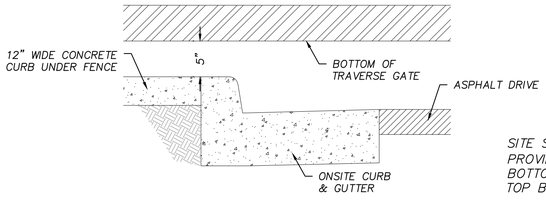

SITE SPECIFIC DETAIL
PROVIDE 5" CLEARANCE BETWEEN BOTTOM OF TRAVERSE GATE AND TOP BACK OF CURB

20 AMERISTAR TRAVERSE GATE

SCALE: NTS

PERMIT SET

PLOTTED March 18, 2025 BY Jeremy Jensen FILE Z:\2024 PROJECTS\570-2402 DEKOLD ARCHITECTURE - WEST VALLEY CITY - RESIDENTIAL FACILITY\ACAD\CONSTRUCTION DOCUMENTS\570-2402 C-5.0 DETAIL SHEET.DWG

NO. | DATE: | DESCRIPTION:

PROFESSIONAL ENGINEER
STEVEN C. EARL
318575-2202
3/19/25
STATE OF UTAH

SHEET DESCRIPTION:

DETAIL SHEET

AIS RESIDENTIAL FACILITY
2574 SOUTH REDWOOD ROAD
WEST VALLEY CITY, UT 84119

Cache • Landmark
Engineers
Surveyors
Planners
95 Golf Course Rd.
Suite 101
Logan, UT 84321
435.713.0099

DATE: 19 MARCH 2025
SCALE: NTS
DESIGN BY: J. JENSEN
CHECKED BY: S. EARL
APPROVED BY: S. EARL
PROJECT NUMBER: 570-2402
SHEET: C-5.3

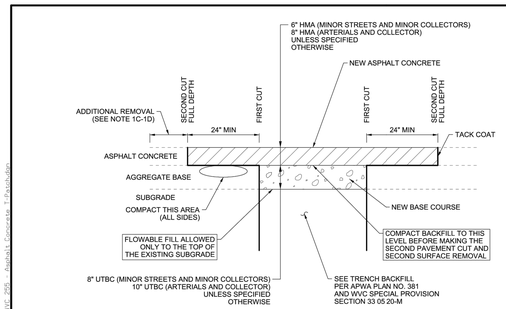

SHALLOW EXCAVATION

(LESS THAN 72 INCHES FROM PAVEMENT SURFACE TO BOTTOM OF EXCAVATION)

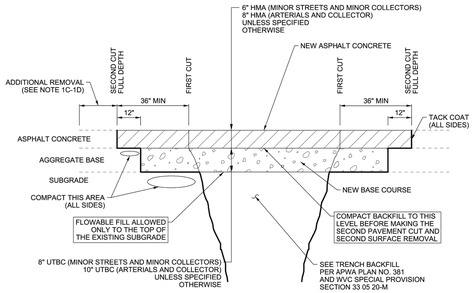

DEEP EXCAVATION

(MORE THAN 72 INCHES FROM PAVEMENT SURFACE TO BOTTOM OF EXCAVATION)

NOTES:

1. GENERAL
   - A. VERTICAL CUTS IN ASPHALT CONCRETE MAY BE DONE BY SAW OR PAVEMENT ZIPPING. IF CUTS GREATER THAN 10 INCHES ARE NECESSARY TO PREVENT PAVEMENT "BREAK OFF" CONSULT ENGINEER FOR DIRECTIONS ON HANDLING ADDITIONAL COSTS.
     - a. FIRST CUT IS TO BE THE WIDTH OF THE TRENCH AND IS INCIDENTAL TO THE PIPE REMOVAL/INSTALLATION PAY ITEMS.
     - b. SECOND CUT IS NOT TO BE PERFORMED UNTIL THE TRENCH HAS BEEN BACK FILLED AND THE UNTREATED BASE COURSE HAS BEEN PLACED AND COMPACTED. THE SECOND CUT IS INCIDENTAL TO THE ASPHALT T-PATCH BID PAY ITEM.
   - B. REPAIR T-PATCH IF ANY OF THE FOLLOWING CONDITIONS OCCUR PRIOR TO FINAL PAYMENT OR AT THE END OF THE ONE YEAR CORRECTION PERIOD:
     - a. PAVEMENT SURFACE DISTORTION EXCEEDS 1/4-INCH DEVIATION IN 10 FEET. REPAIR OPTION - PLANE OFF SURFACE DISTORTIONS. COAT PLANED SURFACE WITH A CATIONIC OR ANIONIC EMULSION THAT COMPLIES WITH APWA SECTION 32 12 03 OR RE-MILL AND PAVE THE CUT AREA TO FILL DEPRESSIONS WITH A MINIMUM OF 2-INCHES OF NEWLY PLACED ASPHALT.
     - b. SEPARATION APPEARS AT A CONNECTION TO AN EXISTING PAVEMENT OR ANY STREET FIXTURE. REPAIR OPTION - BLOW SEPARATION CLEAN AND APPLY JOINT SEALANT; PLAN 265.
     - c. CRACKS AT LEAST 1-FOOT LONG AND 1/4-INCH WIDE OCCUR MORE OFTEN THAN 1 IN 10 SQUARE FEET. REPAIR OPTION - BLOW CLEAN AND APPLY CRACK SEAL, PLAN 265.
     - d. PAVEMENT RAVELING IS GREATER THAN 1 SQUARE FOOT PER 100 SQUARE FEET. REPAIR OPTION - MILL AND INLAY, APWA SECTIONS 32 01 16.71 AND 32 12 05.
   - C. IF A SAW CUT IN THE DIRECTION OF VEHICULAR TRAVEL IS IN A WHEEL PATH, CONSULT ENGINEER FOR DIRECTIONS ON REMOVING ADDITIONAL PAVEMENT OTHER THAN THE AMOUNT SHOWN ON THE DRAWINGS.
   - D. ALLOWABLE REMAINING PAVEMENT WIDTH AS FOLLOWS:
     - a. ROADS WITH CURB AND GUTTER: 2 FEET MINIMUM.
     - b. ROADS WITHOUT CURB AND GUTTER 4 FEET MINIMUM.
2. PRODUCTS
   - A. BASE COURSE: UNTREATED BASE COURSE, APWA SECTION 32 11 23. DO NOT USE GRAVEL AS A BASE COURSE.
   - B. FLOWABLE FILL: TARGET IS 60 PSI IN 28 DAYS WITH 90 PSI MAXIMUM IN 28 DAYS, APWA SECTION 31 05 15. IT MUST FLOW EASILY REQUIRING NO VIBRATION FOR CONSOLIDATION.
   - C. TACK COAT: WVC SPECIAL PROVISION SECTION 32 12 13-13-M
   - D. ASPHALT CONCRETE: WVC SPECIAL PROVISION SECTION 32 12 05-M
3. EXECUTION
   - A. BASE COURSE PLACEMENT: APWA SECTION 32 05 10. MAXIMUM LIFT THICKNESS BEFORE COMPACTION IS 8-INCHES WHEN USING RIDING EQUIPMENT OR 6-INCHES WHEN USING HAND HELD EQUIPMENT. COMPACTION IS 95 PERCENT OR GREATER RELATIVE TO A MODIFIED PROCTOR DENSITY, APWA SECTION 31 23 26
   - B. FLOWABLE FILL: CURE TO INITIAL SET BEFORE PLACING AGGREGATE BASE OR ASPHALT PAVEMENT. USE IN EXCAVATIONS THAT ARE TOO NARROW TO RECEIVE COMPACTION EQUIPMENT. ALLOWED ONLY TO THE TOP OF THE EXISTING SUBGRADE.
   - C. TACK COAT. CLEAN ALL HORIZONTAL AND VERTICAL SURFACES. APPLY FULL COVERAGE ALL SURFACES.
   - D. ASPHALT CONCRETE: UNLESS INDICATED OTHERWISE, LIFT THICKNESS PLACEMENT IS 3-INCHES MINIMUM AFTER COMPACTION. COMPACT TO 94 PERCENT OF ASTM D 2041 (RICE DENSITY).

NO.	DATE	DESCRIPTION

DESIGN: ____ CHECK: ____
DRAWN: ____ CHECK: ____

WEST VALLEY CITY PUBLIC WORKS DEPARTMENT
ENGINEERING DIVISION
3600 CONSTITUTION BOULEVARD
WEST VALLEY CITY, UTAH 84119-3720

DESIGN _____ DATE 7/15/2020.

WVC STANDARD DRAWING

ASPHALT CONCRETE T-PATCH

WVC STD. DWG. NO.
WVC 255

ALL WEST VALLEY CITY ENGINEERING STANDARDS AND DETAILS ARE FOUND AT:
https://www.wvc-ut.gov/DocumentCenter/View/15611/2020-WVC-Engineering-Standards-PDF

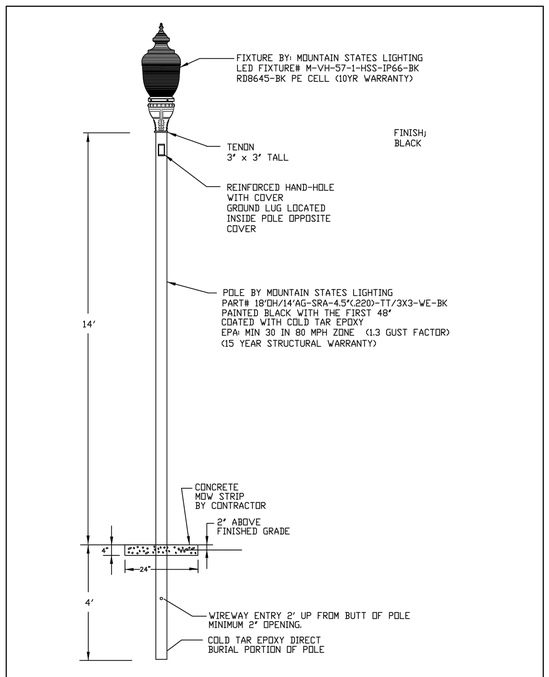

STANDARD DRAWING	WEST VALLEY CITY PUBLIC WORKS DEPARTMENT TRANSPORTATION DIVISION 3600 CONSTITUTION BOULEVARD WEST VALLEY CITY, UTAH 84119-3720
LP-01	
RESIDENTIAL STREET LIGHT	
PROJECT NUMBER: WVC STREET LIGHTING	DESIGN ITM 10-08-2015 DATE
	REVISIONS: REMARKS / DATE / NO. / BY

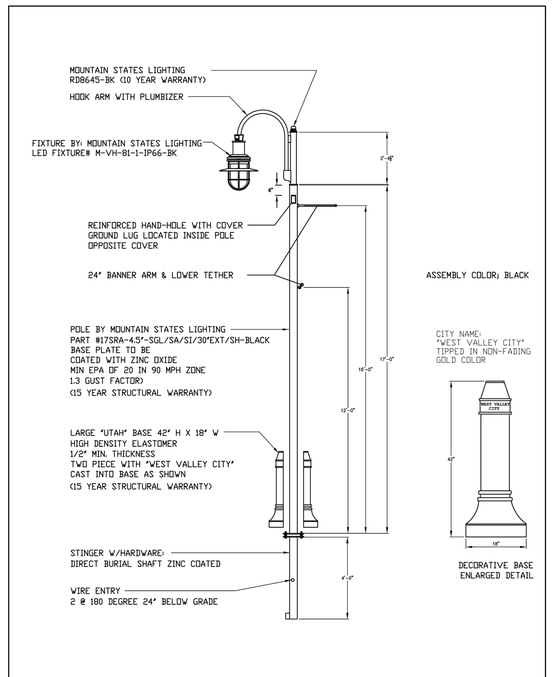

STANDARD DRAWING	WEST VALLEY CITY PUBLIC WORKS DEPARTMENT TRANSPORTATION DIVISION 3600 CONSTITUTION BOULEVARD WEST VALLEY CITY, UTAH 84119-3720
LP-05	
SINGLE SIDEWALK STREET LIGHT	
PROJECT NUMBER: WVC STREET LIGHTING	DESIGN ITM 10-08-2015 DATE
	REVISIONS: REMARKS / DATE / NO. / BY

STREET LIGHTING NOTES:

1. All street lighting work shall be performed in accordance with the West Valley City Street Lighting Standards and the A.P.W.A. Standard Plans and Specifications.
2. Electrical contractor shall contact West Valley City at 801-955-3726 prior to commencement of construction.
3. Contractor shall be responsible to inspect poles and fixtures upon delivery to the job site and to protect the same from damage until installation is complete and lighting system is accepted by West Valley City.
4. Contractor shall be responsible to coordinate construction of lighting system with Rocky Mountain Power and West Valley City. Confirm final location of Rocky Mountain Power transformers or secondary boxes before starting construction.
5. All Light poles, fixtures, junction boxes, transformers or secondary boxes, underground conduit and wiring shall be placed only within the public street right-of-way and/or designated public utility easement. All underground work shall be completed and inspected prior to construction of permanent roadway, sidewalk, and curb and gutter.
6. All aspects of street lighting installation shall be inspected by West Valley City. Call West Valley City Transportation Division at 801-955-3726 to schedule inspections at least 24 hours in advance. Two (2) inspections will be required. One (1) pole and underground installation, and one (1) Final inspection after system installation is completed.
7. Anticipate 12 weeks for delivery of street light assemblies from manufacturer.

PERMIT SET

NO. | DATE | DESCRIPTION

PROFESSIONAL ENGINEER
STEVEN C. EARL
318575-2202
3/19/25
STATE OF UTAH

SHEET DESCRIPTION:

WVC DETAIL SHEET

AIS RESIDENTIAL FACILITY
2574 SOUTH REDWOOD ROAD
WEST VALLEY CITY, UT 84119

Cache • Landmark
Engineers
Surveyors
Planners
95 Golf Course Rd.
Suite 101
Logan, UT 84321
435.713.0099

DATE: 19 MARCH 2025
SCALE: NTS
DESIGN BY: J. JENSEN
CHECKED BY: S. EARL
APPROVED BY: S. EARL
PROJECT NUMBER: 570-2402
SHEET: C-5.4

PLOTTED: March 18, 2025 BY: Jeremy Jensen FILE: Z:\2024 PROJECTS\570-2402 DEKOLD ARCHITECTURE - WEST VALLEY CITY - RESIDENTIAL FACILITY\ACAD\CONSTRUCTION DOCUMENTS\570-2402 C-5.0 DETAIL SHEET.DWG
7/15/2020 3:27:49 PM mvENGD\VCSTANDARDS\WEST VALLEY CITY\WVC Standard Drawings\Asphalt WVC Standard Drawings\WVC 255 - Asphalt Concrete T-Patch.dgn

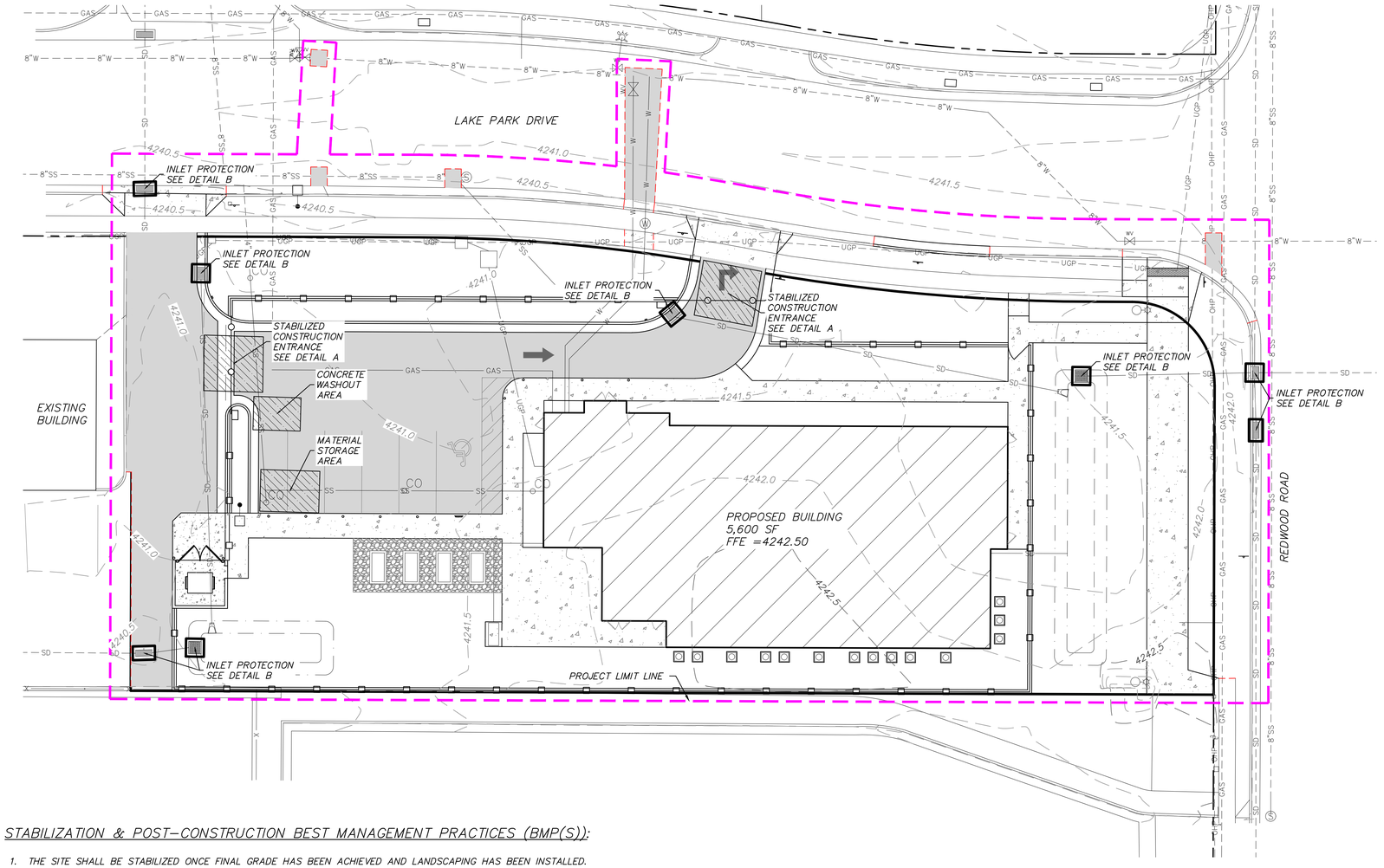

EROSION CONTROL PLAN

0 7.5' 15' 30'

GRAPHIC SCALE 1"= 15'

EROSION CONTROL GENERAL NOTES:

1. GENERAL INFORMATION
THE EROSION CONTROL PLAN IS DIAGRAMMATIC AND IS INTENDED TO BE VIEWED AS A GUIDELINE FOR LOCATING AND IMPLEMENTING EROSION CONTROL BEST MANAGEMENT PRACTICES (BMPs). IT IS THE CONTRACTORS RESPONSIBILITY TO FINALIZE THE TYPE AND LOCATION OF ALL BMPs IN ORDER TO MEET THE REGULATIONS OF THE STATE OF UTAH.

CONTRACTOR TO IMPLEMENT CONSTRUCTION SEQUENCE IDENTIFIED IN THE STORMWATER POLLUTION PREVENTION PLAN.

2. LIMITS OF DISTURBANCE
THE LIMITS OF DISTURBANCE LINE SHOWN ON THIS DRAWING IS FOR MAJOR DEMOLITION AND EXCAVATION OF CIVIL RELATED ELEMENTS. IT IS ANTICIPATED THAT THERE MAY BE SOME ADDITIONAL DISTURBANCE OUTSIDE OF THESE LIMITS, PRIMARILY RELATED TO IRRIGATION/REVEGETATION IMPROVEMENTS. THE CONTRACTOR IS RESPONSIBLE FOR ENSURING EROSION CONTROL BMPs ARE IMPLEMENTED FOR ALL EARTH DISTURBING ACTIVITIES, AND THAT DISCHARGE OF SEDIMENT LADEN RUN-OFF IS NOT PERMITTED.

3. STREET CLEANING: IF SEDIMENT IS TRANSPORTED ON TO THE STREET AND/OR EXISTING PARKING AREAS IT SHALL BE REMOVED ON A DAILY BASIS. SEDIMENT SHOULD BE SHOVELED AND/OR SWEPT FROM THE ASPHALT OR CONCRETE SURFACE AND DISPOSED OF IN A MANNER, WHICH PREVENTS CONTAMINATION WITH STORMWATER OR SURFACE WATER (E.G., COVERED SOIL STOCKPILE). IN ADDITION, A STREET SWEEPER MAY BE USED TO MAINTAIN CLEAN HARDSCAPE AREAS ON AN AS-NEEDED BASIS. ALL ADJACENT PARKING LOT AREAS TO THE SITE SHALL ALSO BE SWEPT DURING WORK DAYS AND AT OTHER TIMES AS NEEDED IN ORDER TO KEEP THE TRAVELED WAY CLEAN FROM MUD, DUST, SILT, AND DEBRIS.

4. VEHICLE WASH-DOWN: THE STABILIZED CONSTRUCTION ACCESSES MAY BE CONSTRUCTED TO SERVE AS A TEMPORARY TRUCK WASH STATION TO ENSURE CONTROL OF SEDIMENT AT THE CONSTRUCTION EXIT POINT OR A SEPARATE WASH-DOWN AREA SHALL BE PROVIDED. THE WASH-DOWN SYSTEM CONSISTS OF A COBBLE PAD (STABILIZED AREA) LINED BELOW WITH FILTER FABRIC, GRADED TO DRAIN AND CONNECT TO THE ADJACENT DRAINAGE SWALE AND CONVEY WATER TO A TEMPORARY SEDIMENTATION BASIN TO COLLECT WASH WATER FOR SETTLEMENT OF DEBRIS. WASH WATER MAY BE RE-USED AFTER SETTLING, INFILTRATED ON SITE, OR TRANSPORTED OFF SITE FOR DISPOSAL. ACCUMULATED SEDIMENTS MAY BE REUSED ON SITE OR DISPOSED OF OFF SITE.

5. CONCRETE CLEANOUT BASIN: A DUMPSTER OR LINED BASIN SHALL BE PLACED NEAR THE ENTRANCE/EXIT TO THE SITE AND ALL CONCRETE DELIVERY VEHICLES SHALL BE REQUIRED TO WASH OUT ONLY INTO THE DUMPSTER/BASIN. CONTRACTOR SHALL REMOVE WASTE AND DISPOSE OF IN A LAWFUL MANNER AS NECESSARY. CONCRETE WASH OUT MAY NOT BE DISPOSED OF ON-SITE OR ALLOWED TO INFILTRATE.

6. DUST CONTROL: SOILS, GRAVELS, AND ETC., WHETHER STOCKPILED OR PLACED, SHALL BE KEPT COVERED AND/OR ADEQUATELY MOIST TO PREVENT AIRBORNE DUST FROM LEAVING THE SITE. ALL CONSTRUCTION AREAS AND EXISTING PAVED AREAS SHALL BE KEPT ADEQUATELY MOIST TO PREVENT AIRBORNE DUST FROM LEAVING THE SITE.

7. DRAIN INLET PROTECTION: ALL EXISTING STORM DRAIN INLETS WITHIN THE PROJECT AREA OR WHICH MAY RECEIVE RUNOFF FROM THE PROJECT AREA SHALL BE PROTECTED ON-SITE. INLET PROTECTION TO BE INSTALLED AND APPROVED/INSPECTED PRIOR TO ANY EARTH DISTURBING ACTIVITIES.

ALL STORM DRAINS, SUMPS, AND STORM DRAIN PIPES THAT ARE INSTALLED OR MADE OPERABLE DURING CONSTRUCTION SHALL BE PROTECTED TO PREVENT STORM WATER FROM ENTERING WITHOUT FIRST BEING FILTERED OR TREATED TO REMOVE SEDIMENT. METHOD OF PROTECTION SHALL BE AS SHOWN OR APPROPRIATE TO NEED.

8. SILT FENCING: SILT FENCING SHALL BE INSTALLED ALONG GRADING LIMIT LINE AS SHOWN ON PLAN AND ALL OTHER LOW AREAS ALONG THE LIMIT OF DISTURBANCE LINE. IT IS THE CONTRACTORS RESPONSIBILITY TO WALK THE PERIMETER OF THE CONSTRUCTION SITE AND TO DETERMINE ALL APPROPRIATE LOCATIONS FOR SILT FENCING TO PREVENT SEDIMENT LADEN DISCHARGE FROM LEAVING THE SITE. SILT FENCING MAY BE COORDINATED AND INSTALLED IN CONJUNCTION WITH OTHER BMPs TO PREVENT RUNOFF FROM LEAVING THE SITE DURING CONSTRUCTION.

9. TEMPORARY SWALE: A TEMPORARY SWALE MAY BE INSTALLED PROVIDING CONVEYANCE FROM THE CONSTRUCTION WASHDOWN AREA TO A TEMPORARY SEDIMENTATION BASIN LOCATED ON-SITE. THE SWALE SHALL BE SIZED AS NECESSARY TO MEET THE NEED, BUT SHALL NOT EXCEED 4' WIDE AND 6" DEEP. THE SWALE SHALL BE INSTALLED IN CONJUNCTION WITH THE OTHER SELECTED BMPs TO ENSURE NO UNFILTERED RUNOFF LEAVES THE SITE.

10. TEMPORARY SEDIMENTATION BASIN: A TEMPORARY SEDIMENTATION BASIN MAY BE USED TO ALLOW SEDIMENT TO FALL OUT OF RUNOFF FROM STORM EVENTS AND FROM THE WASHOUT AREA AND OTHER AREAS ON SITE WHERE RUNOFF IS NOT CONTAINED AND IS LIKELY TO CONTAIN SEDIMENT.

11. SANDBAGGING: SANDBAGS MAY BE REQUIRED TO PREVENT RUNOFF ON HARDSCAPE AREAS THAT MAY NOT BE REMOVED AS PART OF DEMOLITION, AND DO NOT ALLOW FOR PROPER INSTALLATION OF SILT FENCE. SANDBAGS MAY BE USED ON EXISTING CONCRETE, ASPHALT, OR CURB AND GUTTER AREAS. SANGBAGS ARE TO BE USED TO ENSURE NO UNTREATED RUNOFF ESCAPES THE SITE.

12. INSTALLATION SEQUENCING: INLET PROTECTION, TEMPORARY SEDIMENT BASINS, SILT FENCE, AND OTHER BMPs INTENDED TO TRAP SEDIMENT ON SITE SHALL BE INSTALLED BEFORE LAND-DISTURBING ACTIVITIES TAKE PLACE. TEMPORARY SWALE/CONVEYANCE AND STABILIZED CONSTRUCTION ACCESS AND WASH-DOWN AREAS SHOULD BE CREATED IMMEDIATELY UPON INITIAL REMOVAL OF EXISTING MATERIAL AS A PRELIMINARY STEP IN THE SITE DEMOLITION PROCESS. INLET PROTECTION MEASURES SHOULD REMAIN IN PLACE UNTIL CONSTRUCTION IS COMPLETE AND ALL FINISH GRADE MATERIALS HAVE BEEN PLACED.

13. OTHER SELECTED BMPS: AS DETERMINED BY CONTRACTOR.

STABILIZATION & POST-CONSTRUCTION BEST MANAGEMENT PRACTICES (BMP(S)):

1. THE SITE SHALL BE STABILIZED ONCE FINAL GRADE HAS BEEN ACHIEVED AND LANDSCAPING HAS BEEN INSTALLED.
2. ONCE CONSTRUCTION IS COMPLETE, THE STORM DRAIN AND STORMWATER DETENTION SYSTEM SHALL BE STABILIZED, INSPECTED, AND MAINTAINED.
3. MAINTENANCE SHALL INCLUDE THE REMOVAL OF DEPOSITED SEDIMENT AS NECESSARY, ENSURING NO OBSTRUCTIONS OCCUR WHICH MAY IMPEDE DESIRED FLOWS.
4. INSPECTIONS SHALL TAKE PLACE AS DEFINED IN THE SWPPP OR FOLLOWING STORM EVENTS.
5. REFER TO THE CITY OF LOGAN STORMWATER MANAGEMENT BMP MAINTENANCE AGREEMENT FOR ADDITIONAL POST-CONSTRUCTION STORMWATER BMP MAINTENANCE INSTRUCTIONS.

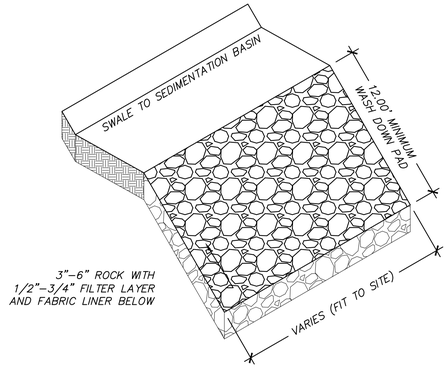

A STABALIZED CONSTRUCTION ENTRANCE
SCALE: NTS

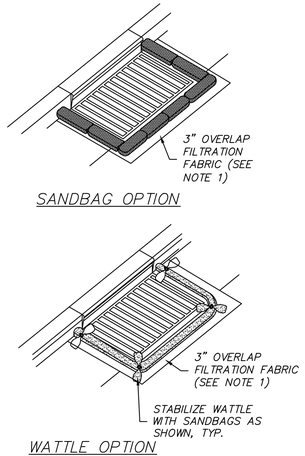

B INLET PROTECTION DETAIL
SCALE: NTS

INLET PROTECTION NOTES:

1. REMOVE EXISTING GRATE AND OVERLAY WITH FILTRATION FABRIC. REPLACE GRATE WITH FABRIC SECURED.
2. PLACE WATTLES OR SANDBAGS TIGHT AGAINST CURB TO PREVENT SEDIMENT-LADEN WATER FROM GETTING BETWEEN CURB AND WATTLE/BAG.
3. PLACE WATTLES OR SANDBAGS SUCH THAT FLOW DOES NOT OVERTOP CURB OR ROAD CENTERLINE.
4. INSPECT INLET PROTECTION AFTER EVERY LARGE STORM EVENT AND AT LEAST BI-WEEKLY, TO ENSURE THAT SEDIMENT CONTROL IS MEETING ITS DESIGN INTENT. MAINTAIN AND/OR REPLACE AS NEEDED.
5. REMOVE SEDIMENT ACCUMULATED WHEN IT REACHES 50% OF SANDBAG OR WATTLE HEIGHT.
6. CONTRACTOR MAY SUBMIT AN ALTERNATIVE METHOD OF INLET PROTECTION. THE ALTERNATIVE METHOD SHALL BE APPROVED BY THE CITY INSPECTOR AND THE LANDSCAPE ARCHITECT.
7. MAINTAIN TOP OF INLET AT 6" ABOVE GRADE FOR SEDIMENTATION AROUND BOX BEFORE PLACEMENT OF CURB, STABILIZATION OF LAND BEHIND CURB, AND PAVING

PERMIT SET

DESCRIPTION:
NO.: DATE:

PROFESSIONAL ENGINEER
STEVEN C. EARL
318575-2202
3/19/25
STATE OF UTAH

SHEET DESCRIPTION:
EROSION CONTROL PLAN

AIS RESIDENTIAL FACILITY
2574 SOUTH REDWOOD ROAD
WEST VALLEY CITY, UT 84119

Cache • Landmark
Engineers
Surveyors
Planners
95 Golf Course Rd.
Suite 101
Logan, UT 84321
435.713.0099

DATE: 19 MARCH 2025
SCALE: 1"=15'
DESIGN BY: J. JENSEN
CHECKED BY: S. EARL
APPROVED BY: S. EARL
PROJECT NUMBER: 570-2402
SHEET: C-6.0

PLOTTED March 18, 2025 BY Jeremy Jensen FILE Z:\2024 PROJECTS\570-2402 DEVELOP ARCHITECTURE - WEST VALLEY CITY - RESIDENTIAL FACILITY\CAD\CONSTRUCTION DOCUMENTS\570-2402 C-6.0 EROSION CONTROL PLAN.DWG

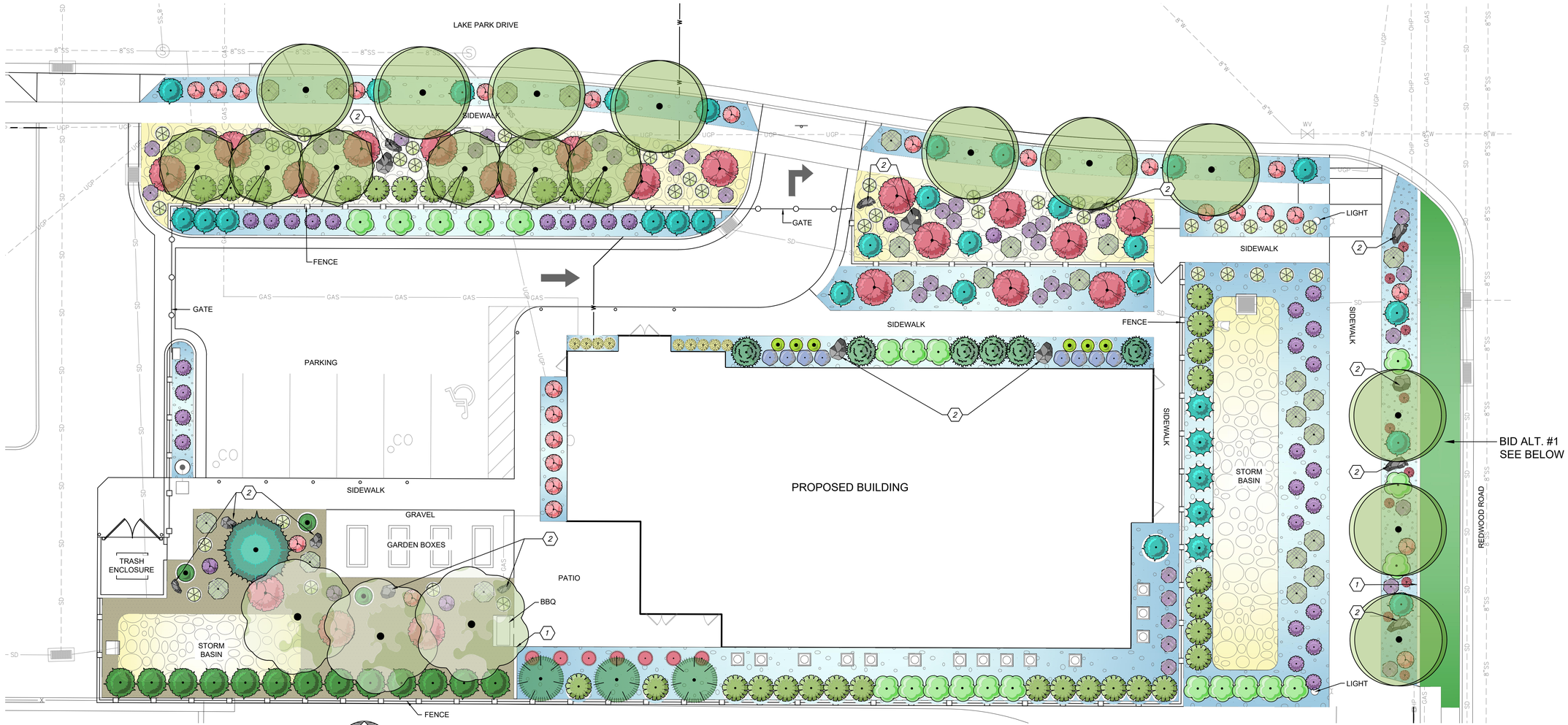

PLANTING PLAN

SCALE: 1" = 10'

GRAPHIC SCALE 1" = 10'

PLANTING GENERAL NOTES

1. ALL PLANT MATERIALS SHALL MEET OR EXCEED SIZE IN SCHEDULES. LANDSCAPE ARCHITECT RESERVES THE RIGHT TO REFUSE PLANT MATERIALS WHICH DO NOT MEET THE QUALITY AS DEFINED IN ANSI Z.60 AMERICAN STANDARDS FOR NURSERY STOCK. SEE DETAIL SHEET L-502 FOR TREE OBSERVATION AND CORRECTION DETAILS PRIOR TO INSTALLATION OF PLANT STOCK.

2. 12" DEEP AMENDED PLANT BACKFILL MATERIAL SHALL BE A MIXTURE OF THREE (3) PARTS TOPSOIL TO ONE (1) PART PEAT MOSS AND SHALL BE MIXED ON-SITE.

3. ALL PLANTINGS SHALL RECEIVE TWENTY-ONE (21) GRAM TABLETS OF "AGRIFORM" PLANT FERTILIZER (OR APPROVED EQUAL) TO BE PLACED AS SHOWN IN DETAILS AND PER MANUFACTURERS RECOMMENDATIONS.

4. TREES PLANTED ADJACENT TO PUBLIC ROADS AND/OR PEDESTRIAN WALKWAYS SHALL BE PRUNED TO SEVEN (7) FEET HEIGHT CLEARANCE ABOVE PAVEMENT.

5. CONTRACTOR TO PROVIDE AUTOMATIC IRRIGATION SYSTEM WITH BACKFLOW PREVENTER FOR ALL LANDSCAPE AREAS - BACK FLOW SHALL MEET ALL CURRENT STATE AND LOCAL CODES FOR HIGH HAZARD BACKFLOW PREVENTION.

REFERENCE NOTES SCHEDULE

SYMBOL	DESCRIPTION	QTY	DETAIL
PLANTING ACCESSORIES			
	3' LANDSCAPE BOULDER	9	5/L-501
	4' LANDSCAPE BOULDER	4	5/L-501
	5' + LANDSCAPE BOULDER	6	5/L-501

PLANT SCHEDULE

SEE SHEET L-501 FOR PLANT SCHEDULE

PLANTING KEYED NOTES

1. PROVIDE 8" CONCRETE MOWCURB, SEE SHEET L-501 DETAIL 6
2. BOULDER LOCATION. SEE REFERENCE NOTES SCHEDULE, THIS SHEET AND L-501 DETAIL 5

BID ALTERNATES:

1. ARTIFICIAL TURF TO REPLACE TURF ALONG PLANT STRIP - SEE SCHEDULE FOR SQUARE FOOTAGE.
2. REDUCE AMOUNT OF SHRUBS AND TREES TO MEET MINIMUM REQUIREMENTS OF WEST VALLEY CITY. NOTE: LANDSCAPING IN PARK STRIP IS **NOT** TO BE REDUCED AND CONDENSER UNITS **MUST REMAINED SCREENED** TO MEET WEST VALLEY CITY STANDARDS.

LICENSED LANDSCAPE ARCHITECT
JENNIFER MAUGHAN
12016192-5301
03-18-25
STATE OF UTAH

SHEET DESCRIPTION:

PLANTING PLAN

WEST VALLEY CITY AIS RESIDENTIAL FACILITY
1739 WEST LAKE PARK DRIVE
WEST VALLEY CITY, UT 84119

Cache • Landmark
Engineers
Surveyors
Planners
95 Golf Course Rd.
Suite 101
Logan, UT 84321
435.713.0099

DATE: 18 MARCH 2025
SCALE: 1" = 10'
DESIGN BY: J. MAUGHAN
CHECKED BY: J. JENSEN
APPROVED BY: S. EARL
PROJECT NUMBER: 570-2402
SHEET: LP101

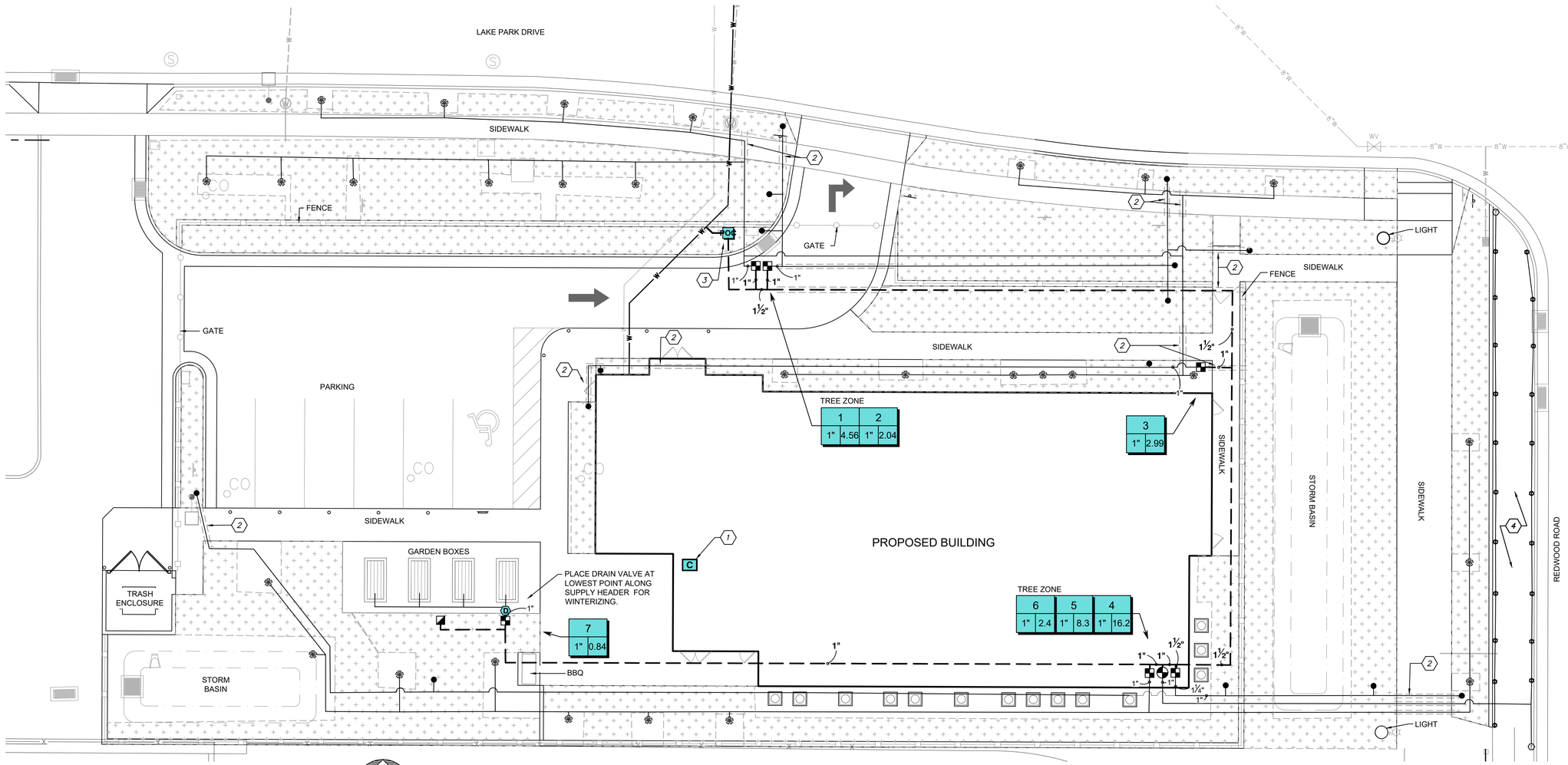

IRRIGATION PLAN

SCALE: 1" = 10'

GRAPHIC SCALE 1"= 10'

IRRIGATION KEYED NOTES

1. NEW CONTROLLER INDOOR WALL MOUNT, COORDINATE INSTALLATION LOCATION WITH MECHANICAL DRAWINGS, SEE IRRIGATION SCHEDULE AND DETAIL 4, L-504.
2. PROVIDE SLEEVING, SEE DETAILS 1 & 2, L-503.
3. IRRIGATION POC CONNECTION, SEE 3/L-504.
4. **BID ALTERNATE: ARTIFICIAL TURF - NO IRRIGATION ZONE REQUIRED**

VALVE CALL OUT

Valve Callout

— Valve Number

#" | # — Valve Flow / Valve Size

PROPOSED WATERING SCHEDULE

SEE L-504 FOR PROPOSED WATERING SCHEDULE.

NOTE: WATERING TIMES FOR SOD FOR TWO WEEK ESTABLISHMENT PERIOD ONLY AND ARE APPROXIMATE. WATERING TIME SHOULD BE DIVIDED INTO 3 - 4 SEPARATE WATERING TIMES PER DAY. WATERING SCHEDULE FOR SOD WILL REQUIRE INCREASES OR DECREASES BASED ON TIME OF YEAR AND DAILY TEMPERATURES.

IRRIGATION GENERAL NOTES

1. THIS PLAN IS DIAGRAMMATIC, SOME SYSTEM COMPONENTS ARE SHOWN IN PAVED AREAS AND BUILDINGS FOR CLARITY AND LEGIBILITY. **ALL IRRIGATION EQUIPMENT AND COMPONENTS ARE TO BE INSTALLED IN LANDSCAPE AREAS.**

2. CONTRACTOR TO BEST FIT IRRIGATION HEADS AS SHOWN IN DESIGN DRAWINGS TO ACTUAL SITE CONDITIONS, SOME AREAS MAY VARY DUE TO ACTUAL ON-SITE CONDITIONS. CONTRACTOR TO COORDINATE ALL NECESSARY SLEEVING ACCORDINGLY. CONTRACTOR TO ENSURE HEAD-TO-HEAD COVERAGE AND SHALL ADD/REMOVE OR ADJUST HEAD AS NECESSARY FOR FIELD CONDITIONS.

3. DUE TO ONSITE VARIATIONS SOME AREAS TO RECEIVE SPRAY HEADS MAY RECEIVE ADJUSTABLE ARC NOZZLE TO REPLACE FIXED ARC NOZZLES. CONTRACTOR TO FIELD VERIFY CONDITIONS AND REPLACE AS NECESSARY. ANY PROPOSED REPLACEMENT OF 5 OR MORE NOZZLES PER ZONE TO BE REVIEWED AND APPROVED BY LANDSCAPE ARCHITECT PRIOR TO INSTALLATION.

4. THIS SYSTEM IS BASED UPON AN AVAILABLE WORKING PRESSURE OF 40 PSI MINIMUM AT THE WORST CASE HEAD AND 50-65 PSI MINIMUM PRIOR TO EACH VALVE. CONTRACTOR TO VERIFY PRIOR TO CONSTRUCTION. CONTACT LANDSCAPE ARCHITECT IMMEDIATELY IF THESE PRESSURES ARE NOT ATTAINABLE.

5. ALL VALVE BOXES TO BE PLACED IN SHRUB BEDS AND EASILY ACCESSED AND MAINTAINED (WITHIN 12" FROM BACK OF CURB, SIDEWALK OR MOWSTRIP). REFER TO IRRIGATION **DETAIL 6, SHEET L-503**.

6. CONTRACTOR TO LOCATE SLEEVES WHERE MAINLINE AND LATERAL IRRIGATION LINES CROSS UNDER ANY PAVED SURFACE AS SHOWN ON PLAN. SLEEVES SHALL BE TWO SIZES LARGER THAT PIPES TO BE SLEEVED. MULTIPLE SLEEVES MAY BE PLACED IN A SINGLE TRENCH. SLEEVES TO EXTEND 6" BEYOND PAVED SURFACE ON EACH SIDE. WIRES ARE TO BE SLEEVED UNDER PAVED SURFACES. **SEE 1 & 2/L-503**.

7. IT IS RECOMMENDED THAT ALL IRRIGATION SYSTEM INSTALLATION WORK BE COMPLETED UNDER DIRECTION OF A FOREMAN OR SUPERVISOR WITH FIVE YEARS MINIMUM EXPERIENCE IN IRRIGATION SYSTEM INSTALLATION.

8. IT IS THE CONTRACTOR'S RESPONSIBILITY TO ENSURE THAT ALL PRODUCTS AND MATERIALS INSTALLED ARE IN ACCORDANCE WITH CURRENT LAWS AND LOCAL REGULATIONS.

9. **ALL IRRIGATION SYSTEM PIPING TO BE GRADED SO THE SYSTEM CAN BE COMPLETELY DRAINED OR BLOWN OUT WITH COMPRESSED AIR, TO ENSURE THE PROPER WINTERIZATION OF THE IRRIGATION SYSTEM**.

10. CONTRACTOR SHALL USE NO PIPE SMALLER THAN 1" FOR ANY WATER DELIVERY PORTIONS OF THE IRRIGATION SYSTEM AND NO LATERAL DELIVERY LINES SMALLER THAN 1" SHALL BE USED ON ANY DRIP ZONE.

11. PIPE SIZE RELATES TO THE ACCUMULATION OF HEADS AND THE FLOW NEEDS OF EACH HEAD. GENERALLY THE PIPE SIZE IS LARGEST NEAR THE VALVE AND GETS SMALLER AS IT MOVES TOWARD THE END-LINE SPRINKLER HEADS.

12. CONTRACTOR IS REQUIRED TO ENSURE ALL NECESSARY COMPONENTS ARE READY FOR CONTROLLER INSTALLATION, SEE SPECIFICATION AND MANUFACTURER'S GUIDELINES FOR MORE INFORMATION.

13. CONTRACTOR TO FURNISH AND INSTALL ALL SELENOID DECODERS (ADAPTERS) AS REQUIRED FOR VALVE OPERATION, SEE SPECIFICATIONS.

14. IRRIGATION CONTROLLER SHALL BE GROUNDED WITH GROUNDING ROD INSTALLATION TO MEET MANUFACTURERS GUIDELINES.

15. TWO-WIRE PATH MUST BE GROUNDED AT A MINIMUM OF EVERY 500' ALONG PATH. GROUNDING MAY OCCUR AT DECODERS OR INLINE. GROUNDING RODS MAY BE INSTALLED IN SEPARATE BOX WITH CADWELD ON DECODER GROUND WIRE; GROUNDING RODS TO BE SET A MINIMUM OF 8' AWAY FROM TWO-WIRE PATH.

16. CONTRACTOR TO FURNISH AND INSTALL HYDROMETER AS IDENTIFIED IN SPECIFICATIONS AND DETAILS.

IRRIGATION SCHEDULE

SYMBOL	MANUFACTURER/MODEL	QTY	DETAIL
1	HUNTER MP CORNER PROS-04-PRS40-CV	2	10/L-503
ADJ. / 360	HUNTER MP800SR PROS-04-PRS40-CV	21	10/L-503

SYMBOL	MANUFACTURER/MODEL	QTY	DETAIL
	RAIN BIRD XCZ-100-PRB-COM	6	11/L-503
	RAIN BIRD XFDE-06-12 DRIP RING	29	1/L-504
	RAIN BIRD DRIP LINE XFCV-06-12	84 SF	6/L-504
	AREA TO RECEIVE DRIP EMITTERS RAIN BIRD PCT		1/L-504
	Emitter Notes:		1/L-504
	XBT05 emitters (2 assigned to each 3 gal plant)	130	1/L-504
	XBT05 emitters (3 assigned to each 5 gal plant)	400	1/L-504
	XBT10 emitters (3 assigned to Wichita Blue Juniper)	39	1/L-504

SYMBOL	MANUFACTURER/MODEL	QTY	DETAIL
	RAIN BIRD EFB-CP 1"	1	3-5/L-503
	RAIN BIRD 3 RC ¾" QUICK COUPLER	1	9/L-503
WATERSENSE C	RAIN BIRD ESP8LXME WITH RAIN SENSOR **WATER SENSE EPA LABEL REQUIRED**	1	4/L-504
POC	WATER METER 1"	1	4/L-504
	IRRIGATION LATERAL LINE: PVC SCHEDULE 40	1,565 L.F.	1&2/L-503
	IRRIGATION MAINLINE: PVC SCHEDULE 40	230.0 L.F.	1&2/L-503
	PIPE SLEEVE: POLYETHYLENE AND PVC CLASS 200	136.8 L.F.	1&2/L-503

LICENSED LANDSCAPE ARCHITECT
JENNIFER MAUGHAN
12016192-5301
03-18-25
STATE OF UTAH

SHEET DESCRIPTION:

WEST VALLEY CITY AIS RESIDENTIAL FACILITY

1739 WEST LAKE PARK DRIVE
WEST VALLEY CITY, UT 84119

C|L
Cache • Landmark
Engineers
Surveyors
Planners
95 Golf Course Rd.
Suite 101
Logan, UT 84321
435.713.0099

DATE: 18 MARCH 2025
SCALE: 1" = 10'
DESIGN BY: J. MAUGHAN
CHECKED BY: J. JENSEN
APPROVED BY: S. EARL
PROJECT NUMBER: 570-2402
SHEET: LI201

PLANT SCHEDULE

BID ALT. #2 LP101

SYMBOL	BOTANICAL NAME	COMMON NAME	QTY	
TREES				
	MALUS X `SPRING SNOW`	SPRING SNOW CRAB APPLE	3	1.5 CAL B&B STRONG CENTRAL LEADER 2/L-501
	QUERCUS BICOLOR `BONNIE AND MIKE`	BEACON OAK	6	
	ZELKOVA SERRATA `JFS-KW1` TM	CITY SPRITE ZELKOVA	10	2" CAL B&B MIN 8' HEIGHT STRONG CENTRAL LEADER 2/L-501
EVERGREEN				
	PICEA ABIES `CUPRESSINA`	NORWAY SPRUCE	6	6' MIN HEIGHT B&B 1/L-501
	PICEA MARIANA `AUREOVARIEGATA`	VARIEGATED BLACK SPRUCE	3	
	PICEA PUNGENS 'BABY BLUE EYES'	BABY BLUE EYES COLORADO BLUE SPRUCE	1	
SHRUBS				
	CLETHRA ALNIFOLIA `CALEB`	VANILLA SPICE	22	5 GAL 3/L-501
	CORNUS STOLONIFERA `ARCTIC FIRE`	ARCTIC FIRE DOGWOOD	33	
	EUONYMUS FORTUNEI `EMERALD `N GOLD`	EMERALD `N GOLD WINTERCREEPER	27	
	JUNIPERUS SCOPULORUM 'WICHITA BLUE'	WICHITA BLUE JUNIPER	13	15 GAL 3/L-501
	JUNIPERUS SQUAMATA `BLUE STAR`	BLUE STAR JUNIPER	27	
	PICEA PUNGENS `GLOBOSA` NANA	DWARF GLOBE BLUE SPRUCE	5	
	PINUS MUGO 'SLOWMOUND'	SLOWMOUND MUGO PINE	3	5 GAL 3/L-501
	RHUS AROMATICA `AUTUMN AMBER`	AUTUMN AMBER SUMAC	20	
	ROSA X 'CHEWPERADVENTURE'	OSO EASY® MANGO SALSA ROSE	26	
	SYRINGA X 'SMNSDTP'	BABY KIM® DWARF LILAC	32	
GRASSES				
	BOUTELOUA GRACILIS `BLONDE AMBITION`	BLUE GRAMA	43	3 GAL 4/L-501
	DESCHAMPSIA CESPITOSA `GOLDTAU`	GOLD DEW TUFTED HAIR GRASS	9	
	MISCANTHUS SINENSIS `LITTLE ZEBRA`	SILVER GRASS	6	
	MUHLENBERGIA REVERCHONII `PUND01S` TM	UNDAUNTED RUBY MUHLY	10	
	PANICUM VIRGATUM `SHENANDOAH`	SHENANDOAH SWITCH GRASS	7	
PERENNIAL				
	BAPTISIA X 'BLUEBERRY SUNDAE'	DECADENCE® BLUEBERRY SUNDAE WILD INDIGO	8	
	LAVANDULA ANGUSTIFOLIA `HIDCOTE`	HIDCOTE LAVENDER	3	
	PEROVSKIA X `LONGIN`	RUSSIAN SAGE	39	
GROUND COVERS				
	MULCH BARK 4``	BARK MULCH	2,090 SF	6/L-501
	4" DEPTH 3`` MULTI-COLOR RIVER COBBLE	STONE MULCH	3,800 SF	
	3" DEPTH MULCH STONE 3/4`` WASATCH GREY	STONE MULCH	4,890 SF	
	TURF SOD LOCAL DROUGHT TOLERANT	SOD	699 SF	

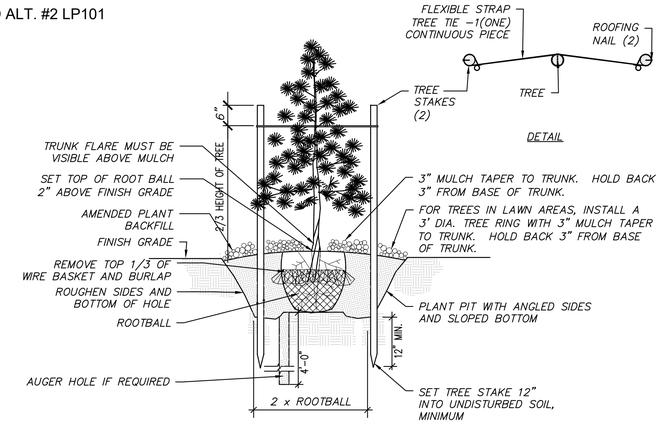

1 EVERGREEN PLANTING DETAIL
1" = 1'-0" T-PL-CLM-07

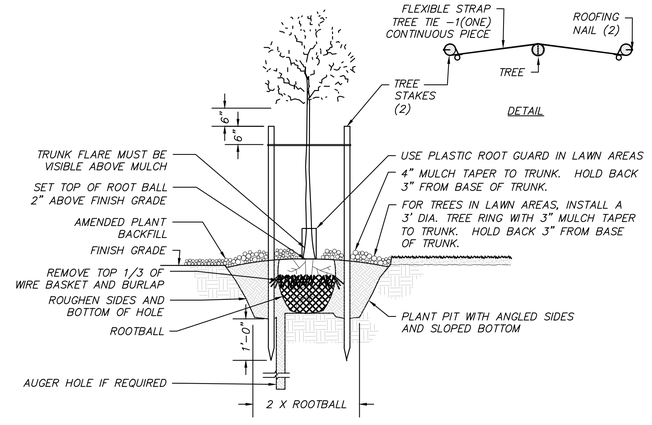

2 TREE PLANTING AND STAKING DETAIL
1" = 1'-0" T-PL-CLM-09

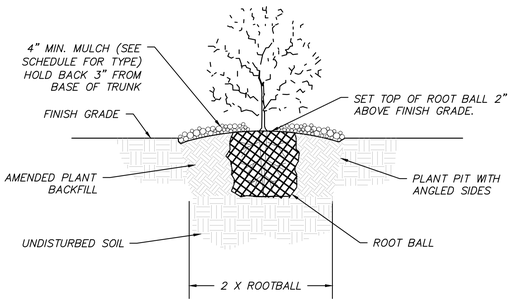

3 SHRUB PLANTING DETAIL
N.T.S. T-PL-CLM-01

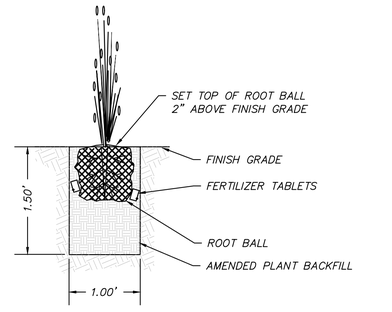

4 PERENNIAL PLANTING DETAIL
N.T.S. T-PL-CLM-03

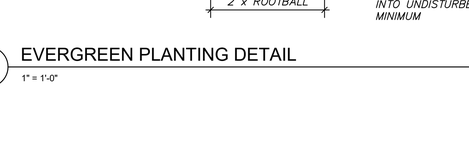

5 BOULDER PLACEMENT DETAIL
N.T.S. T-PL-CLM-08

NOTES:
1. MOWSTRIP TO BE CAST-IN-PLACE AND POURED USING TYPICAL WEIGHT STRUCTURAL CONCRETE.
2. CONTROL JOINTS TO BE SPACED AT 5' O.C. AND EXPANSION JOINTS AT 20' AND WHERE IT ABUTTS OTHER CONCRETE ELEMENTS.
3. CONTRACTOR TO ENSURE POSITIVE DRAINAGE AROUND MOWSTRIPS-DO NOT CREATE A DAM EFFECT WITH PLACEMENT OF MOWSTRIP.
4. MAXIMUM 1/4" WIDTH VARIATION.
5. PRECISELY FOLLOW LAYOUT AS SHOWN ON PLANTING PLAN.

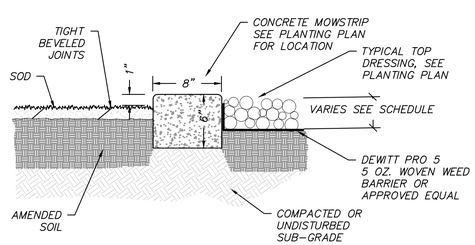

6 8" MOWSTRIP, SOD, AND MULCH DETAIL
N.T.S. T-PL-CLM-06

LICENSED LANDSCAPE ARCHITECT
JENNIFER MAUGHAN
12016192-5301
03-18-25
STATE OF UTAH

SHEET DESCRIPTION:
PLANTING DETAILS

WEST VALLEY CITY AIS RESIDENTIAL FACILITY
1739 WEST LAKE PARK DRIVE
WEST VALLEY CITY, UT 84119

Cache • Landmark
Engineers
Surveyors
Planners
95 Golf Course Rd.
Suite 101
Logan, UT 84321
435.713.0099

DATE:	18 MARCH 2025
SCALE:	1" = 10'
DESIGN BY:	J. MAUGHAN
CHECKED BY:	J. JENSEN
APPROVED BY:	S. EARL
PROJECT NUMBER:	570-2402
SHEET:	L-501

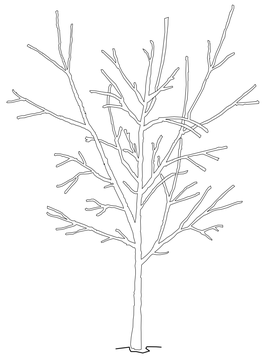

BEFORE PLANTING, TREE HAS THREE CODOMINANT STEMS. THE TWO THAT COMPETE WITH THE ONE IN THE CENTER SHOULD BE PRUNED TO SUPPRESS THEIR GROWTH.

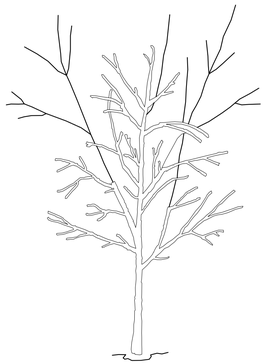

TWO COMPETING STEMS WERE REDUCED SUBSTANTIALLY, IN THIS CASE REMOVING ABOUT 70% OF THEIR FOLIAGE USING REDUCTION CUTS.

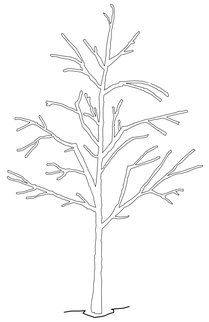

AFTER PRUNING, TREE HAS ONLY ONE DOMINANT STEM

NOTES:
1- ALL TREES SHOWN ARE REJECTABLE UNLESS THEY UNDERGO RECOMMENDED TREATMENT.
2- TREE SHALL MEET CROWN OBSERVATION DETAIL FOLLOWING CORRECTION.

1 CROWN CORRECTION DETAIL

1/2" = 1'-0"

URBAN TREE FOUNDATION © 2014
OPEN SOURCE FREE TO USE

FX-PL-FX-CORR-04

BEFORE SHAVING

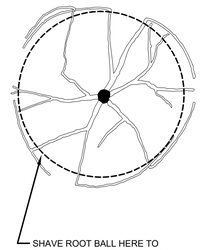

SHAVING PROCESS

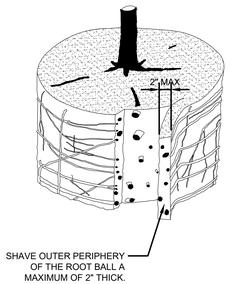

SHAVING COMPLETE

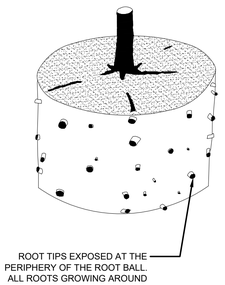

NOTES:
1- SHAVING TO BE CONDUCTED USING A SHARP BLADE OR HAND SAW ELIMINATING NO MORE THAN NEEDED TO REMOVE ALL ROOTS ON THE PERIPHERY OF ROOT BALL.

2- SHAVING CAN BE PERFORMED JUST PRIOR TO PLANTING OR AFTER PLACING IN THE HOLE.

2 ROOT BALL SHAVING CONTAINER DETAIL

1" = 1'-0"

URBAN TREE FOUNDATIONO 2014
OPEN SOURCE FREE TO USE

FX-PL-FX-CORR-01

ACCEPTABLE

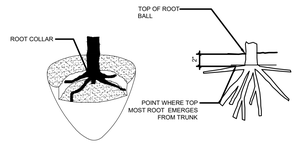

THE POINT WHERE TOP-MOST ROOT(S) EMERGES FROM THE TRUNK (ROOT COLLAR) SHOULD BE WITHIN THE TOP 2" OF SUBSTRATE. THE ROOT COLLAR AND THE ROOT BALL INTERIOR SHOULD BE FREE OF DEFECTS INCLUDING CIRCLING, KINKED, ASCENDING, AND STEM GIRDLING ROOTS. STRUCTURAL ROOTS SHALL REACH THE PERIPHERY NEAR THE TOP OF THE ROOT BALL.

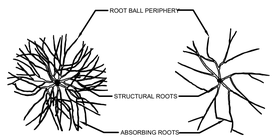

ROOTS RADIATE FROM TRUNK AND REACH SIDE OF ROOT BALL WITHOUT DEFECTING DOWN OR AROUND.

REJECTABLE

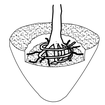

STRUCTURAL ROOTS CIRCLE INTERIOR OF ROOT BALL. NO STRUCTURAL ROOTS ARE HORIZONTAL AND REACH THE ROOT BALL PERIPHERY NEAR THE TOP OF THE ROOT BALL.



ONLY ABSORBING ROOTS REACH THE PERIPHERY NEAR THE TOP OF THE ROOT BALL. STRUCTURAL ROOTS MOSTLY WRAP OR ARE DEFLECTED ON THE ROOT BALL INTERIOR.

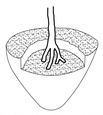

STRUCTURAL ROOTS DESCEND INTO ROOT BALL INTERIOR. NO STRUCTURAL ROOTS ARE HORIZONTAL AND REACH THE ROOT BALL PERIPHERY NEAR THE TOP OF THE ROOT BALL.

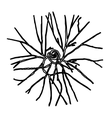

STRUCTURAL ROOTS CIRCLE AND DO NOT RADIATE FROM THE TRUNK.

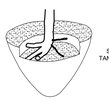

STRUCTURAL ROOTS PRIMARILY GROW TO ONE SIDE.

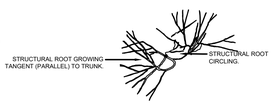

STRUCTURAL ROOTS MISSING FROM ONE SIDE, AND/OR GROW TANGENT TO TRUNK.

NOTES:
1- OBSERVATIONS OF ROOTS SHALL OCCUR PRIOR TO ACCEPTANCE. ROOTS AND SOIL MAY BE REMOVED DURING THE OBSERVATION PROCESS; SUBSTRATE/SOIL SHALL BE REPLACED AFTER THE OBSERVATIONS HAVE BEEN COMPLETED.

2- SEE SPECIFICATIONS FOR OBSERVATION PROCESS AND REQUIREMENTS.

3 ROOT OBSERVATIONS DETAIL - BALLED AND BURLAPPED

1 1/2" = 1'-0"

URBAN TREE FOUNDATION © 2014
OPEN SOURCE FREE TO USE

FX-PL-FX-OBSV-01

STEP 1 - REMOVE SOIL AND ROOTS OVER THE ROOT COLLAR

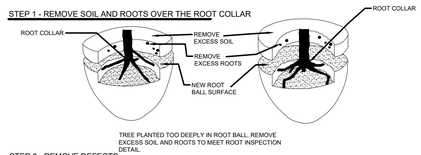

TREE PLANTED TOO DEEPLY IN ROOT BALL. REMOVE EXCESS SOIL AND ROOTS TO MEET ROOT INSPECTION DETAIL.

STEP 2 - REMOVE DEFECTS

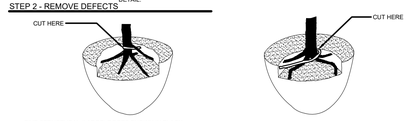

FIVE STRUCTURAL (LARGE) ROOTS SHOWN IN BLACK. REMOVE STRUCTURAL (WHITE) ROOT WRAPPING ROOT COLLAR.

FOUR STRUCTURAL ROOTS SHOWN IN BLACK. REMOVE ROOT (WHITE) GROWING OVER STRUCTURAL ROOTS.

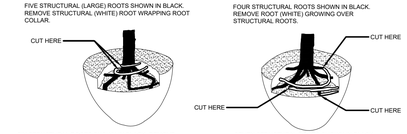

SIX STRUCTURAL ROOTS SHOWN IN BLACK. REMOVE STRUCTURAL ROOTS (WHITE) GROWING OVER ROOT COLLAR BY CUTTING THEM JUST BEFORE THEY MAKE AN ABRUPT TURN.

SEVEN STRUCTURAL ROOTS SHOWN IN BLACK. REMOVE STRUCTURAL ROOTS (WHITE) GROWING AROUND OR OVER ROOT COLLAR BY CUTTING THEM JUST BEFORE THEY MAKE AN ABRUPT TURN.

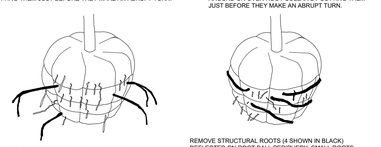

REMOVE STRUCTURAL ROOTS (4 SHOWN IN BLACK) EXTENDING FROM ROOT BALL.

REMOVE STRUCTURAL ROOTS (4 SHOWN IN BLACK) DEFLECTED ON ROOT BALL PERIPHERY. SMALL ROOTS (1/4" OR LESS) AT THE PERIPHERY OF THE ROOT BALL ARE NOT DEFINED AS DEFECTS AND DO NOT NEED TO BE REMOVED.

NOTES:
1- ALL TREES SHOWN ARE REJECTABLE UNLESS THEY UNDERGO RECOMMENDED CORRECTION.
2- FIRST STEP 1, THEN STEP 2. ADJUST HOLE DEPTH TO ALLOW FOR THE REMOVAL OF EXCESS SOIL AND ROOTS OVER THE ROOT COLLAR.
3- ROOTS AND SOIL MAY BE REMOVED DURING THE CORRECTION PROCESS; SUBSTRATE/SOIL SHALL BE REPLACED AFTER THE CORRECTION HAS BEEN COMPLETED.
4- TREES SHALL PASS ROOT OBSERVATIONS DETAIL FOLLOWING CORRECTION.

4 ROOT CORRECTION DETAIL - BALLED AND BURLAPPED

1 1/2" = 1'-0"

URBAN TREE FOUNDATIONO 2014
OPEN SOURCE FREE TO USE

FX-PL-FX-CORR-03

LICENSED LANDSCAPE ARCHITECT
JENNIFER MAUGHAN
12016192-5301
03-18-25
STATE OF UTAH

SHEET DESCRIPTION:
SELECTION/CORRECTION DETAILS

WEST VALLEY CITY AIS RESIDENTIAL FACILITY
1739 WEST LAKE PARK DRIVE
WEST VALLEY CITY, UT 84119

Cache • Landmark
Engineers
Surveyors
Planners
95 Golf Course Rd.
Suite 101
Logan, UT 84321
435.713.0099

DATE: 18 MARCH 2025
SCALE: 1" = 10'
DESIGN BY: J. MAUGHAN
CHECKED BY: J. JENSEN
APPROVED BY: S. EARL
PROJECT NUMBER: 570-2402
SHEET: L-502

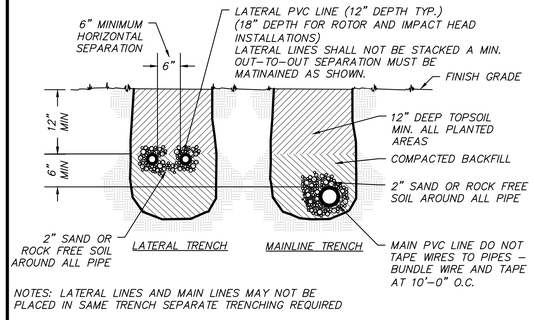

NOTES: LATERAL LINES AND MAIN LINES MAY NOT BE PLACED IN SAME TRENCH SEPARATE TRENCHING REQUIRED

1 TYPICAL TRENCHING

1" = 1'-0" T-IR-CLM-TREN-01

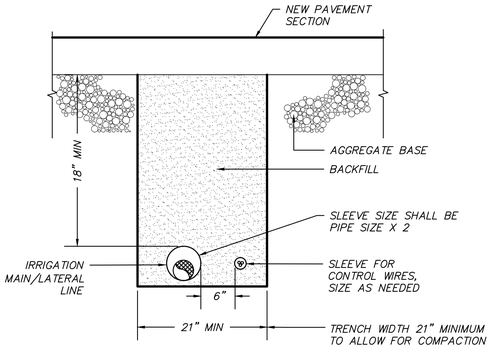

2 MISC. PIPE TRENCH - NEW PAVEMENT

NTS T-IR-CLM-TREN-02

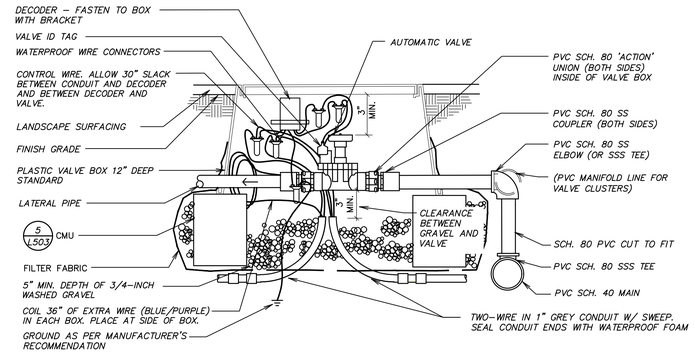

NOTES:
1. LIMIT 1 VALVE PER BOX.
2. 10" MIN. LATERAL LINE DEPTH AT VALVE BOX, 12" MIN. LATERAL LINE DEPTH EVERYWHERE ELSE.
3. PROVIDE MIN. 2" CLEARANCE BETWEEN CONDUIT AND CMU BLOCK.

3 AUTOMATIC VALVE WITH TW0-WIRE SYSTEM

1/8" = 1'-0" T-IR-CLM-VALV-08

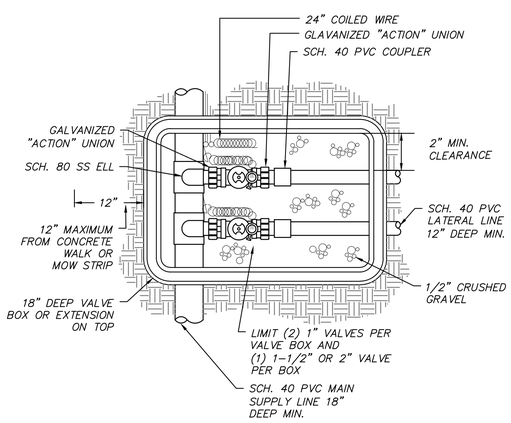

4 VALVE ASSEMBLY DETAIL - PLAN VIEW

NTS T-IR-CLM-VALV-05

NOTES:
1. VALVE BOX TO REST ON (4) CMU BLOCKS (ONE FOR EACH SIDE).
2. CLUSTERED VALVE BOXES MAY SHARE A CMU BLOCK.

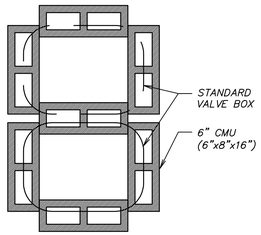

5 CMU PLACEMENT DETAIL

1/8" = 1'-0" T-IR-CLM-VALV-10

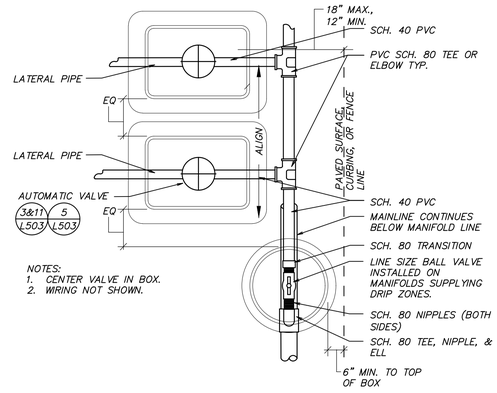

NOTES:
1. CENTER VALVE IN BOX.
2. WIRING NOT SHOWN.

6 MANIFOLD & VALVE ASSEMBLY

1" = 1" T-IR-LDS-VALV-04

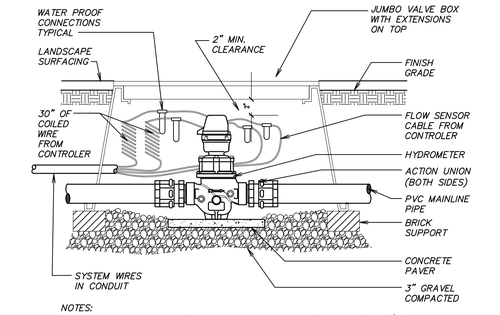

NOTES:
1. CONTRACTOR TO RUN 2 PAIR OF RAINBIRD PE-39 SHIELDED WIRE (14 GAUGE) FROM EXISTING CONTROLLER TO HYDROMETER LOCATION
2. INSTALL HYDROMETER PER MANUFACTURERS SPECIFICATIONS FOR "NORMALLY OPEN" OPERATION

7 HYDROMETER AND MASTER VALVE

3/4" = 1'-0" T-IR-USU-02

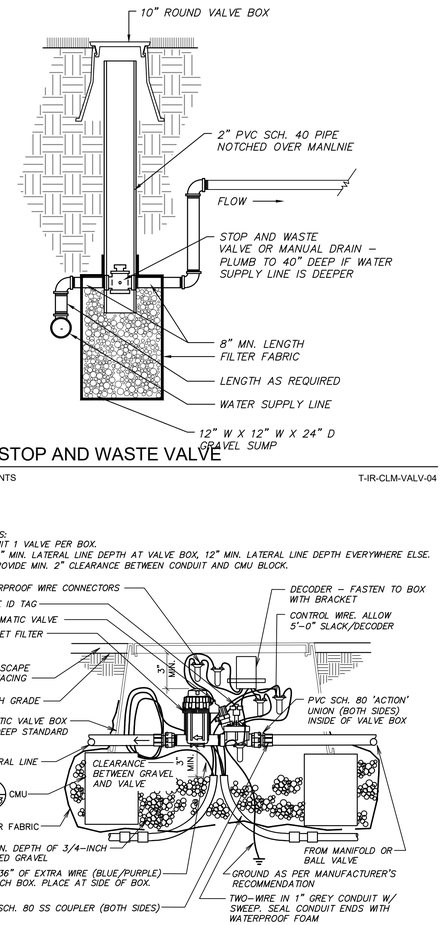

8 STOP AND WASTE VALVE

NTS T-IR-CLM-VALV-04

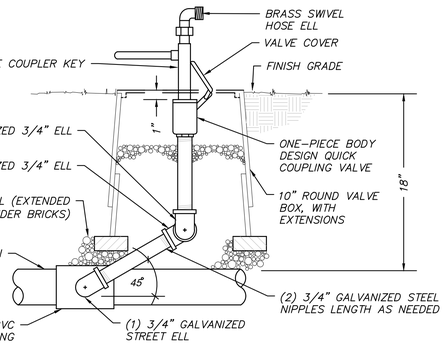

SIDE VIEW

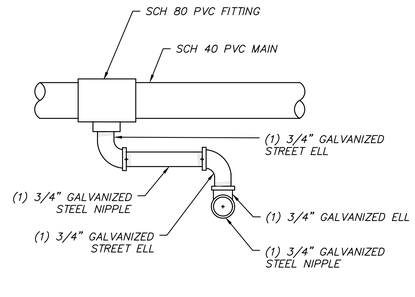

TOP VIEW

9 QUICK COUPLING DETAIL

NTS T-IR-CLM-QUIC-01

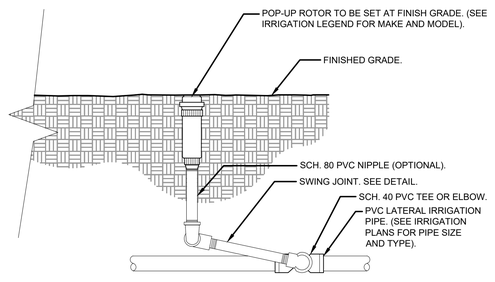

NOTES:
1- ALL THREADED CONNECTION POINTS BETWEEN SCH. 40 PVC AND SCH. 80 PVC FITTING SHALL BE INSTALLED USING TEFLON TAPE.

2- CONTRACTOR SHALL COMPACT SOIL AROUND ROTOR AND RISER PRIOR TO PLANTING, PLUGGING, SEEDING, OR LAYING OF SOD.

10 ROTOR SPRAYHEAD

1 1/2" = 1'-0" FX-IR-FX-HEAD-01

NOTES:
1. LIMIT 1 VALVE PER BOX.
2. 10" MIN. LATERAL LINE DEPTH AT VALVE BOX, 12" MIN. LATERAL LINE DEPTH EVERYWHERE ELSE.
3. PROVIDE MIN. 2" CLEARANCE BETWEEN CONDUIT AND CMU BLOCK.

11 DRIP VALVE ASSEMBLY SECTION - TWO WIRE

1/8" = 1'-0" T-IR-CLM-VALV-11

LICENSED LANDSCAPE ARCHITECT
JENNIFER MAUGHAN
12016192-5301
03-18-25
STATE OF UTAH

SHEET DESCRIPTION:

IRRIGATION DETAILS

WEST VALLEY CITY AIS RESIDENTIAL FACILITY
1739 WEST LAKE PARK DRIVE
WEST VALLEY CITY, UT 84119

C.L
Cache • Landmark
Engineers
Surveyors
Planners
95 Golf Course Rd.
Suite 101
Logan, UT 84321
435.713.0099

DATE: 18 MARCH 2025
SCALE: 1" = 10'
DESIGN BY: J. MAUGHAN
CHECKED BY: J. JENSEN
APPROVED BY: S. EARL
PROJECT NUMBER: 570-2402
SHEET: L-503

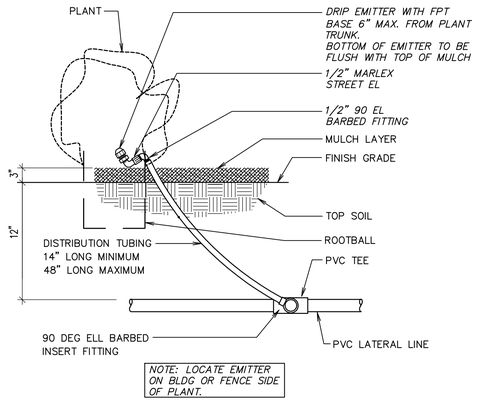

1 DRIP EMITTER_

1 1/2" = 1'-0" T-IR-LDS-DRIP-02

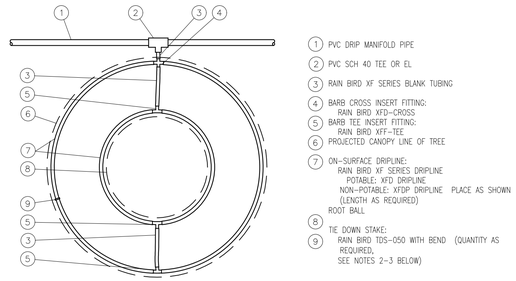

1. PVC DRIP MANIFOLD PIPE
2. PVC SCH 40 TEE OR EL
3. RAIN BIRD XF SERIES BLANK TUBING
4. BARB CROSS INSERT FITTING: RAIN BIRD XFD-CROSS
5. BARB TEE INSERT FITTING: RAIN BIRD XFF-TEE
6. PROJECTED CANOPY LINE OF TREE
7. ON-SURFACE DRIPLINE: RAIN BIRD XF SERIES DRIPLINE POTABLE: XFD DRIPLINE NON-POTABLE: XFDP DRIPLINE PLACE AS SHOWN (LENGTH AS REQUIRED) ROOT BALL
8. TIE DOWN STAKE:
9. RAIN BIRD TDS-050 WITH BEND (QUANTITY AS REQUIRED; SEE NOTES 2-3 BELOW)

NOTES:
1. DISTANCE BETWEEN LATERAL RINGS AND EMITTER SPACING TO BE BASED ON SOIL TYPE, AND TREE CANOPY. SEE INSTALLATION SPECIFICATIONS ON RAIN BIRD WEB SITE (WWW.RAINBIRD.COM) FOR SUGGESTED SPACING.
2. PLACE TIE DOWN STAKES EVERY THREE FEET IN SAND, FOUR FEET IN LOAM, AND FIVE FEET IN CLAY.
3. AT FITTINGS WHERE THERE IS A CHANGE OF DIRECTION SUCH AS TEES OR ELBOWS, USE TIE-DOWN STAKES ON EACH LEG OF THE CHANGE OF DIRECTION.

2 XFD ON-SURFACE DRIPLINE AROUND TREE

1" = 1" R-03

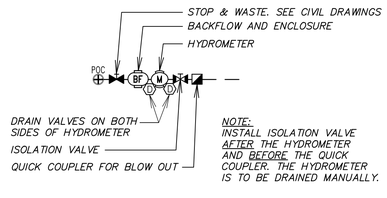

3 POC SCHEMATIC

NTS T-IR-CLM-POCA-02

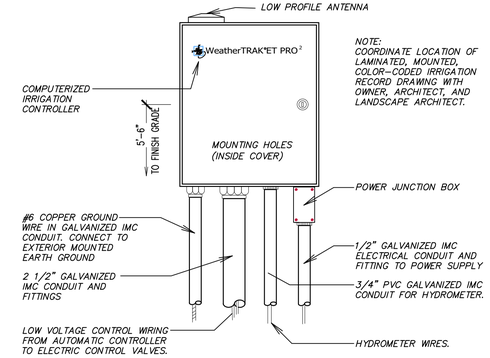

4 SMART CONTROLLER

1/8" = 1'-0" T-IR-CLM-CONT-05

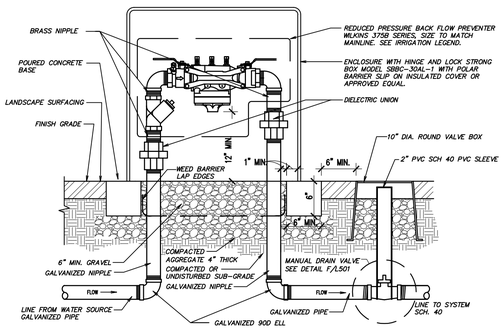

5 REDUCED PRESSURE BACKFLOW PREVENTER WILKINS

1" = 1'-0" T-IR-CLM-BACK-02

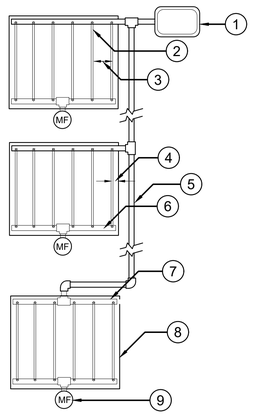

NOTE:
1. RECOMMENDED MINIMUM FILTRATION: 120 MESH
2. PRESSURE AT FLUSH VALVE SHALL BE MIN 14.5 PSI
3. 2 PSI CHECK VALVE (MAX 4.6' OF WATER (ELEVATION CHANGE))

1. REMOTE CONTROL VALVE WITH DISC FILTER AND PRV
2. XFCV DRIPLINE
3. SEE SPECIFICATIONS FOR ROW SPACING
4. PERIMETER LATERALS 2" TO 4" FROM EDGE
5. PVC OR POLY SUPPLY HEADER
6. PVC OR POLY EXHAUST HEADER
7. DRIPLINE START CONNECTION
8. GROW BOX PERIMETER
9. MANUAL FLUSH VALVE PLUMBED TO PVC OR POLY

6 DRIPLINE BOX LAYOUT

Not to scale FX-IR-NETA-DRIP-18

WATERING SCHEDULE

NUMBER	MODEL	TYPE	PRECIP	IN./WEEK	MIN./WEEK	GAL./WEEK	GAL./DAY
1	RAIN BIRD XCZ-100-PRB-COM	DRIP RING	0.73 in/h	3	245	1,745	582
2	RAIN BIRD XCZ-100-PRB-COM	AREA FOR DRIP EMITTERS	0.68 in/h	1	88	704	352
3	RAIN BIRD XCZ-100-PRB-COM	AREA FOR DRIP EMITTERS	1.02 in/h	1	59	176	88.1
4	RAIN BIRD XCZ-100-PRB-COM	AREA FOR DRIP EMITTERS	0.79 in/h	1	77	1,250	625
5	RAIN BIRD EFB-CP (2)	TURF ROTARY	0.85 in/h	14	985	8,175	1,168
6	RAIN BIRD XCZ-100-PRB-COM	DRIP RING	0.6 in/h	3	300	720	240
7	RAIN BIRD XCZ-100-PRB-COM	AREA FOR DRIPLINE	0.96 in/h				
		TOTALS:			1,754	12,770	3,054

LICENSED LANDSCAPE ARCHITECT
JENNIFER MAUGHAN
12016192-5301
03-18-25
STATE OF UTAH

SHEET DESCRIPTION:

IRRIGATION DETAILS

WEST VALLEY CITY AIS RESIDENTIAL FACILITY

1739 WEST LAKE PARK DRIVE
WEST VALLEY CITY, UT 84119

Cache • Landmark
Engineers
Surveyors
Planners
95 Golf Course Rd.
Suite 101
Logan, UT 84321
435.713.0099

DATE: 18 MARCH 2025
SCALE: 1" = 10'
DESIGN BY: J. MAUGHAN
CHECKED BY: J. JENSEN
APPROVED BY: S. EARL
PROJECT NUMBER: 570-2402
SHEET: L-504

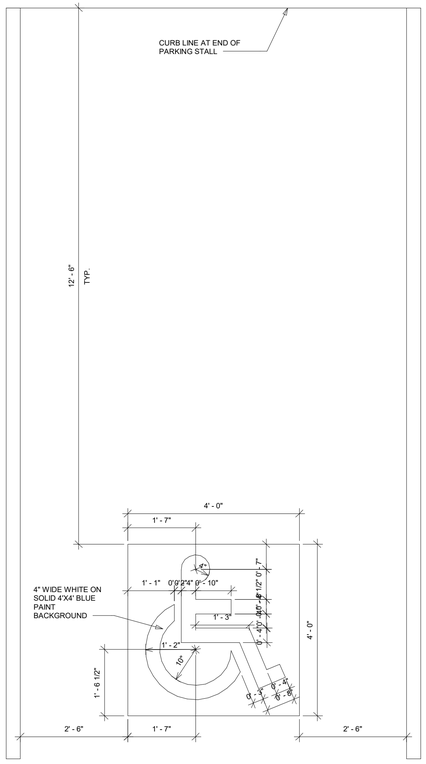

UNIVERSAL SYMBOL - FOR PARKING STALLS
3/4" = 1'-0"

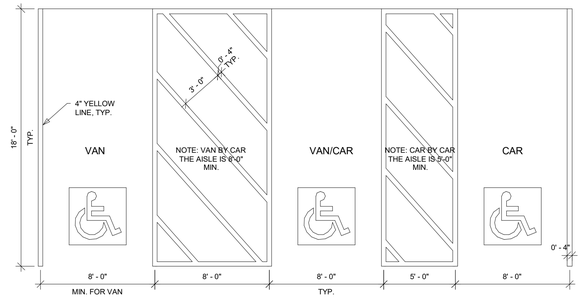

ACCESSIBLE PARKING STALLS - DETAIL
1/4" = 1'-0"

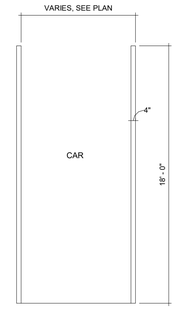

TYP. PARKING STALL - DETAIL
1/4" = 1'-0"

DEKOLD ARCHITECTURE INC.
1975 Belmont Ave, Idaho Falls, ID. 83404
83402
(208)206-7338
www.behance.net/kevindekold
kevindekold@hotmail.com

STATE OF UTAH
KEVIN DEKOLD
No. 7164959-0301
LICENSED ARCHITECT
1/22/2025

Structural
Calder Richards Consulting Engineers
1805 South Redwood Road Ste 102
Salt Lake City, UT 84104
(801) 466-1899

Landscape
Cache Landmark
95 W Golf Course Rd St. 101
Logan UT 84321
(435) 713-0099

Civil
Cache Landmark
95 W Golf Course Rd St. 101
Logan UT 84321
(435) 713-0099

Mechanical
Royal
1537 S E Bay Blvd
Provo, UT 84606
(801) 375-2228

Electrical
BNA Consulting
4225 W Lake Park Blvd St. 275
West Valley City, UT 84121
(435) 628-3870

AIS - WEST VALLEY
EXPANSION INDEPENDANT LIVING BUILDING
2574 S. REDWOOD RD.
WEST VALLEY CITY, UT 84119

REVISIONS:
1 03-19-25
2 00-00-00
3 00-00-00

SHEET NUMBER:
AS-101
3/19/2025

LEGEND

SHEET TO BE PRINTED IN COLOR

EGRESS PATH

ONE - HALF HOUR RATED FIRE PARTITION

ONE - HOUR RATED FIRE PARTITION

APPLICABLE CODES

2021 INTERNATIONAL BUILDING CODE
2020 NATIONAL ELECTRIC CODE
2021 INTERNATIONAL MECHANICAL CODE
2021 INTERNATIONAL PLUMBING CODE
2021 ENERGY CONSERVATION CODE
2021 INTERNATIONAL FUEL GAS CODE
2021 INTERNATIONAL FIRE CODE
ICC / ANSI A117.1-2009
ASHRAE 90.1-2010

1. ALL INTERIOR BEARING WALLS ARE ONE HOUR RATED
2. ALLOWABLE EXIT ACCESS TRAVEL DISTANCE: R-4 = 250'

STORAGE (ACCESSORY)

RESIDENTIAL (OCC. R-4)

BUSINESS (OCC. B)

TACTILE EXIT SIGN:

FE — TYPE 'ABC' FIRE EXTINGUISHER IN SEMI-RECESSED CABINET.

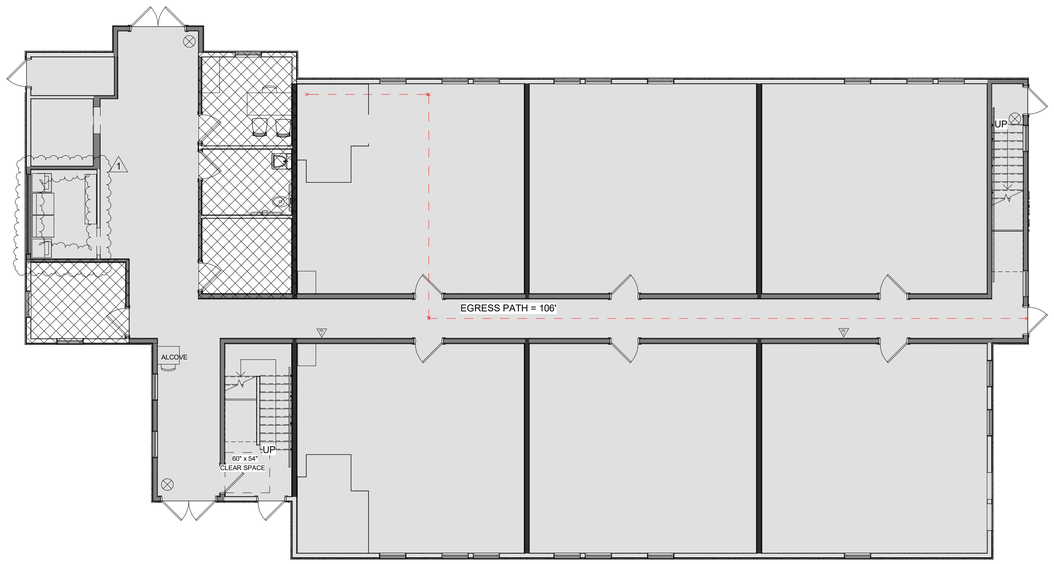

29 OCCUPANTS
EGRESS WIDTH (29 x .2) = 5.8"
CORRIDOR PROVIDED = 53"

MAIN LEVEL FLOOR PLAN - LIFE SAFETY PLAN

SCALE 1/8" = 1'-0"

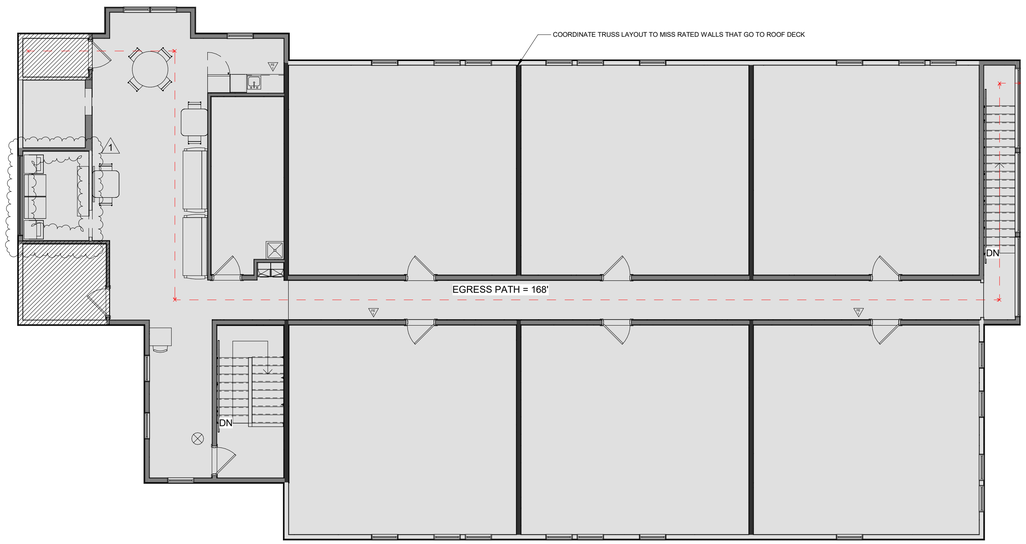

28 OCCUPANTS
EXIT DISCHARGE AT MAIN LEVEL
STAIR WIDTH (28x.3) = 9.3"
STAIR WIDTH PROVIDED = 42"
EGRESS WIDTH (28 x .2) = 5.6"
CORRIDOR PROVIDED = 53"

RUN ALL FIRE RATED WALLS ON SECOND LEVEL TO UNDERSIDE OF ROOF DECK

SECOND LEVEL FLOOR PLAN - LIFE SAFETY PLAN

SCALE 1/8" = 1'-0"

UNIT BREAKDOWN

GROUP R-4

ACCESSIBILITY (IBC CHAPTER 11 THE FAIR HOUSING ACT GUIDELINES, AND ICC/ANSI A117.1-2009). TWO ACCESSIBLE UNITS TO BE PROVIDED ON SITE, WITH ALL REMAINING UNITS TYPE 'B' (IBC 1108.6.4).

OTHER REQUIREMENTS

WINDOWS:
PROVIDE WINDOW FALL PROTECTION DEVICES IN ACCORDANCE WITH IBC 1015.8, WHILE STILL MAINTAINING REQUIRED WINDOW EGRESS SIZING IN ACCORDANCE WITH IBC 1031

SIGNAGE:

TO BE PROVIDE IN ACCORDANCE WITH IBC 1013.4, IBC 1023.9, AND IBC 1112.

ACCESSIBILITY:

COMMON AREAS AND USES (GARBAGE DUMPSTERS, MAIL BOXES, ETC) TO COMPLY WITH TITLE III OF ADA AND THE FAIR HOUSING ACT GUIDELINES.

SITE IMPROVEMENTS AND STREET IMPROVEMENTS WITHIN STREET RIGHT-OF-WAYS, TO BE CONSTRUCTED ACCORDING TO CURRENT CITY DEVELOPMENT STANDARDS

AN AUTOMATIC FIRE SPRINKLER SYSTEM IS TO BE INSTALLED THROUGHOUT THE BUILDING IN ACCORDANCE WITH NFPA 13 (IBC 903.2.8), FOR AN ALLOWABLE AREA INCREASE (IBC 506.2), HEIGHT INCREASE (IBC 504.3), AND OTHER CODE ALLOWED BENEFITS.

EXTERIOR WALL PROTECTION:

FIRE SEPARATION DISTANCE (IBC, MEASURED FROM BUILDING FACE TO ONE OF THE FOLLOWING: CLOSET INTERIOR LOT LINE; TO CENTERLINE OF STREET, AN ALLEY OR PUBLIC WAY; OR IMAGINARY LINE BETWEEN TWO BUILDINGS ON THE LOT

MINIMUM ROOF CLASSIFICATION:

CONSTRUCTION TYPE V-B = CLASS 'C' MINIMUM ROOF COVERING (IBC TABLE 1505.1)

ROOF COVERING TYPES PROVIDED: SINGLE PLY MEMBRANE TPO (CLASS C OR BETTER')

CONCEALED SPACES:

DRAFTSTOPPING IS NOT REQUIRED IN BUILDINGS EQUIPPED THROUGHOUT WITH AN AUTOMATIC SPRINKLER SYSTEM IN ACCORDANCE WITH NFPA 13R (IBC 718.3.2.(1) AND IBC 718.4.2(2))

FIREBLOCKING (IBC 718.2)

ROOF ASSEMBLIES SHALL BE VENTILATED IN ACCORDANCE WITH IBC 1202.2

ATTIC ACCESS (IBC 1209.2)

INTERIOR WALL AND CEILING FINISHES:

GROUP R-4 (IBC TABLE 803.13)
C VERTICAL EXITS AND EXIT PASSAGEWAYS
C CORRIDORS AND OTHER EXITWAYS
C ROOM AND ENCLOSED SPACES

INTERIOR FLOOR FINISHES:

TO BE INSTALLED IN ACCORDANCE WITH IBC 804.

3M Fire Barrier CP 25WB+ Caulk or equal as required by code

A. Volume Fill Guide for Core Drilled Holes Application guide for filling holes with CP 25WB+ Caulk

Metallic Pipe Size	Actual Pipe O.D.	Common Hole or sleeve I.D.	Volume of Caulk Req'd 1/2" In Depth (in³)	Cartridges of Caulk	Gallons of Caulk
1 in.(35,4 mm)	1.32 in.(33,5 mm)	2 in.(50,8 mm)	0.89	.05	.004
2 in.(50,8 mm)	2.38 in.(60,4 mm)	3 in.(76,2 mm)	1.31	.07	.006
3 in.(76,2 mm)	3.50 in.(88,9 mm)	4 in.(101,6 mm)	1.47	.08	.007
4 in.(101,6 mm)	4.50 in.(114,3 mm)	5 in.(127,0 mm)	1.87	.10	.009
5 in.(127,0 mm)	5.56 in.(141,2 mm)	6 in.(152,4 mm)	2.00	.11	.009
6 in.(152,4 mm)	6.63 in.(168,4 mm)	8 in.(203,2 mm)	7.87	.41	.04
8 in.(203,2 mm)	8.63 in.(219,2 mm)	10 in.(254,0 mm)	10.02	.53	.05
10 in.(254,0 mm)	10.75 in.(273,0 mm)	12 in.(304,8 mm)	11.16	.59	.05
12 in.(304,8 mm)	12.75 in.(323,8 mm)	14 in.(355,6 mm)	13.05	.69	.06

Notes:
1. Final caulk requirements may vary if criteria is different than stated in the application guide.
2. When the maximum annular space is 1-1/4 in. (31,8 mm) or less, a 1/2 in. (12,7 mm) minimum depth of CP 25WB+ Caulk is required.
3. When the maximum annular space is larger than 1 in. (25,4 mm) or the pipe O.D is greater than 12 in. (304,8 mm), a 1 in. (25,4 mm) minimum depth of CP 25WB+ Caulk is required.
4. Damming materials, such as fiberglass, mineral wood or backer rod, may be used to support the CP 25WB+ Caulk.

Typical Penetration Firestops For Metal Pipe/Conduit and Insulated Cable Through Fire Rated Construction.

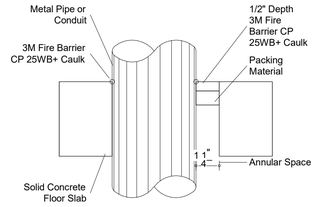

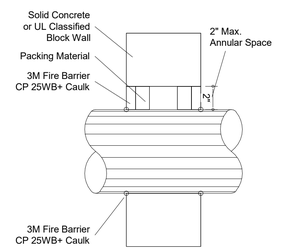

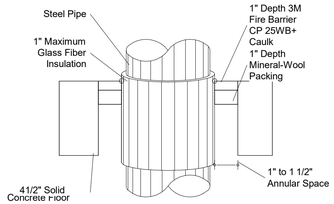

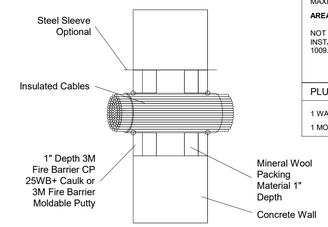

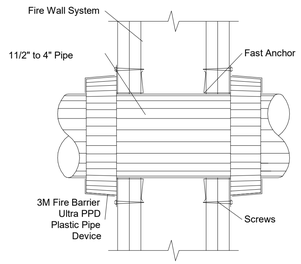

CODE & DESIGN CRITERIA
APARTMENT BUILDING

TYPE OF CONSTRUCTION	**TYPE - VB**
FIRE SPRINKLERS	**YES, 903.2.8**
OCCUPANCY TYPE	**RESIDENTIAL TREATMENT FACILITY GROUP R-4 CONDITION 2 INCIDENTAL BUSINESS**

BUILDING SIZE

MAIN LEVEL	5577 SF
SECOND LEVEL	5577 SF
TOTAL	11154 SF
NUMBER OF STORIES	2
BUILDING HEIGHT	25'-11"

AUTOMATIC FIRE SPRINKLERS

AN AUTOMATIC FIRE SPRINKLER SYSTEM IS TO BE INSTALLED THROUGHOUT THE BUILDING IN ACCORDANCE WITH NFPA 13 (IBC 903.2.8), FOR AN ALLOWABLE AREA INCREASE (IBC 506.2), HEIGHT INCREASE (IBC 504.3), AND OTHER CODE ALLOWED BENEFITS.

ALLOWABLE FLOOR AREA AND BUILDING HEIGHT

OCCUPANCY CLASSIFICATION	SPRINKLER SYSTEM	CONSTRUCTION TYPE	ALLOWABLE AREA FACTOR
R-4 CONDITION 2	NFPA 13 (IBC 903.2.8)	VB	36,000

MAXIMUM BUILDING HEIGHT = 30'

OCCUPANT LOAD - APARTMENT

LEVEL 01
RESIDENTIAL = 5,169 S.F. / 200 GROSS (IBC TABLE 1004.5), THEREFORE 26 OCCUPANTS.
INCIDENTAL BUSINESS = 407 S.F. / 150 THEREFORE 3 OCCUPANTS.

LEVEL 02
RESIDENTIAL = 5,577 S.F. / 200 GROSS (IBC TABLE 1004.5), THEREFORE 28 OCCUPANTS.

TOTAL BUILDING OCCUPANT LOAD = 57

FIRE PROTECTION REQUIREMENTS

FIRE ALARM AND DETECTION SYSTEMS:

FIRE ALARM AND DETECTION SYSTEM FOR GROUP R-4 OCCUPANCY TO BE INSTALLED THROUGHOUT ENTIRE BUILDING (IBC 907.2.9)

DWELLING SEPARATIONS:

ONE-HOUR FIRE PARTITIONS (IBC 420 AND IBC 708.3), 1-HOUR-FIRE-RESISTANT

CORRIDOR FIRE RESISTANCE:

HALF-HOUR FIRE PARTITIONS WITH NFPA 13 AUTOMATIC FIRE SPRINKLER SYSTEM (IBC TABLE 1020.1), ONE-HOUR-FIRE-RESISTANT CONSTRUCTION (TYPE V-B). DOOR OPENINGS AT CORRIDORS TO BE 20 MINUTE (IBC TABLE 716.2.2.2)

SOUND TRANSMISSION AT UNITS:
ALL WALL ASSEMBLIES SEPARATING DWELLING UNITS FROM OTHER DWELLING UNITS OR PUBLIC AREAS SHALL HAVE AN STC OF 50, OR 45 IF FIELD TESTED

FIRE EXTINGUISHERS:

ONE FIRE EXTINGUISHER FOR EVERY 3,000 S.F. SPACED WITHIN 75'-0" TRAVEL DISTANCE MAXIMUM.

AREA OF REFUGE:

NOT REQUIRED WHEREAS AN AUTOMATIC FIRE SPRINKLER SYSTEM IS TO BE INSTALLED THROUGHOUT THE ENTIRE BUILDING ACCORDANCE WITH NFPA 13 (IBC 1009.3.3).

PLUMBING FIXTURE REQUIREMENTS

1 WATER CLOSET, 1 LAVATORY, 1 BATHTUB/SHOWER PER UNIT.
1 MOP SINK, 1 DRINKING FOUNTAIN, 1 WATER CLOSET, 1 LAVATORY, 1 RESTROOM FOR PUBLIC

DEKOLD ARCHITECTURE INC.
1975 Belmont Ave, Idaho Falls, ID. 83404
83402
(208) 206-7338
www.behance.net/kevindekold
kevindekold@hotmail.com

STATE OF UTAH
KEVIN DEKOLD
No. 7164959-0301
LICENSED ARCHITECT
1/22/2025

Civil — Cache Landmark — 95 W Golf Course Rd St. 101 Logan, UT 84321 (435) 713-0099
Landscape — Cache Landmark — 95 W Golf Course Rd St. 101 Logan, UT 84321 (435) 713-0099
Structural — Calder Richards Consulting Engineers — 1805 South Redwood Road Ste 102 Salt Lake City, UT 84104 (801) 466-1899
Mechanical — Royal — 1637 S E Bay Blvd Provo, UT 84606 (801) 375-2228
Electrical — BNA Consulting — 4225 W Lake Park Blvd St. 275 West Valley City, UT 84121 (435) 628-3870

AIS - WEST VALLEY
EXPANSION INDEPENDANT LIVING BUILDING
2574 S. REDWOOD RD.
WEST VALLEY CITY, UT 84119

REVISIONS:
1 — 03-19-25
2 — 00-00-00
3 — 00-00-00

SHEET NUMBER:
A-000
3/19/2025

3/19/2025 4:21:06 PM

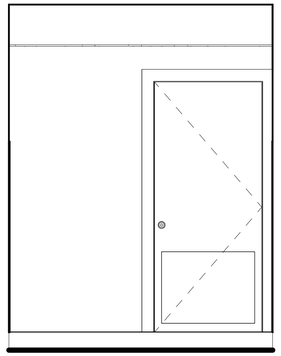

2 UNISEX BATHROOM
SCALE: 1/2" = 1'-0"

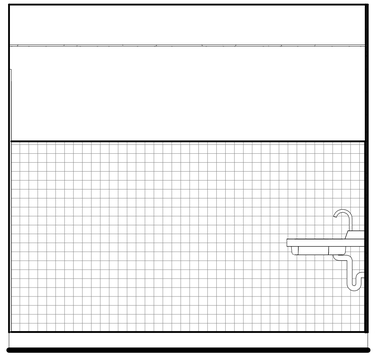

3 UNISEX BATHROOM - A
SCALE: 1/2" = 1'-0"

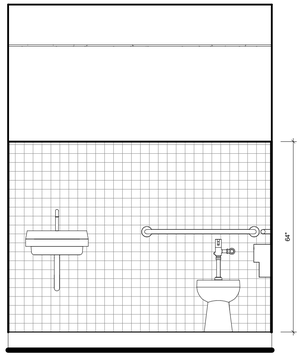

4 UNISEX BATHROOM - B
SCALE: 1/2" = 1'-0"

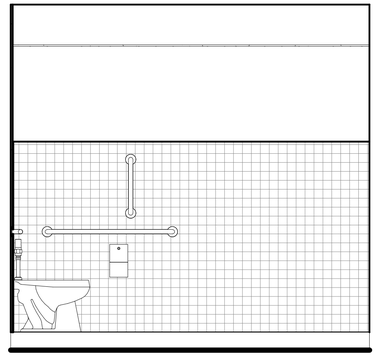

5 UNISEX BATHROOM - C
SCALE: 1/2" = 1'-0"

GENERAL NOTES

A. EXISTING FIELD CONDITIONS MAY VARY FROM CONDITIONS ANTICIPATED DURING PREPARATION OF THESE DOCUMENTS. IF CONDITIONS VARY AND WARRANT FURTHER RESEARCH AND IDENTIFICATION OF SUBSEQUENT ISSUES, NOTIFY THE OWNER AND ARCHITECT IMMEDIATELY.

B. SEE SHEETS GI003 WALL TYPES. ALL FIRE AND SOUND WALLS CONTINUOUS BETWEEN FIRE FLOORS AND CEILINGS.

C. CONTRACTOR IS RESPONSIBLE TO COORDINATE ALL WORK. WHEN CONFLICT ARISES, NOTIFY THE ARCHITECT IMMEDIATELY.

D. CONTROL JOINTS ARE SHOWN ON EXTERIOR ELEVATION SHEETS, U.N.O.

E. PROVIDE BACKING FOR ALL FIXTURES.

F. PROVIDE BACKING FOR FUTURE WALL MOUNTED GRAB BARS AT WATER CLOSETS, TUBS AND SHOWERS. AT WATER CLOSET LOCATIONS WHERE STANDARD GRAB BARS ARE NOT FEASIBLE BACKING SHALL BE PROVIDED FOR SWING UP GRAB BARS. (REFER TO ANSI 1004.11.1.1 FOR SWING UP GRAB BAR REQUIREMENTS)

G. DIMENSIONS ARE TO FACE OF SHEATHING/ EDGE CONCRETE AT EXTERIOR WALLS, TO FACE OF STUD AT INTERIOR WALLS, TO CENTER LINE OF COLUMNS, TO CENTER LINE OF ASSEMBLY AT PARTITION WALLS. FIELD VERIFY ALL DIMENSIONS.

H. SEE ENLARGED UNIT PLANS FOR UNIT DIMENSIONS, WALL TYPES & DOOR TYPES.

I. USE GLASS MAT DRYWALL IN ALL WET AREA WALLS TO RECEIVE NONABSORBENT FINISHES. USE WATER RESISTANT DRYWALL IN ALL OTHER WET AREAS WALL AND CEILING ASSEMBLIES.

J. REFER TO GI-001 & GI-002 FOR ACCESSIBILITY AND CLEARANCE DIAGRAMS.

FLOOR PLAN LEGEND

WALL TAG — XX — WALL TYPE

DOOR TAG — XXXX — DOOR NUMBER

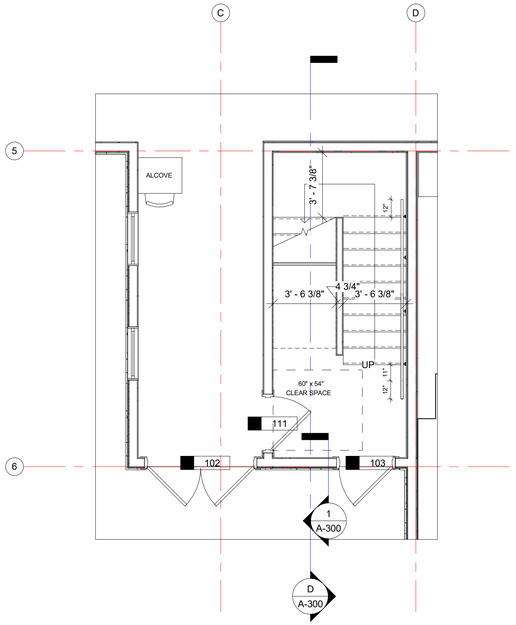

STAIRS MAIN LEVEL
SCALE 1/4" = 1'-0"

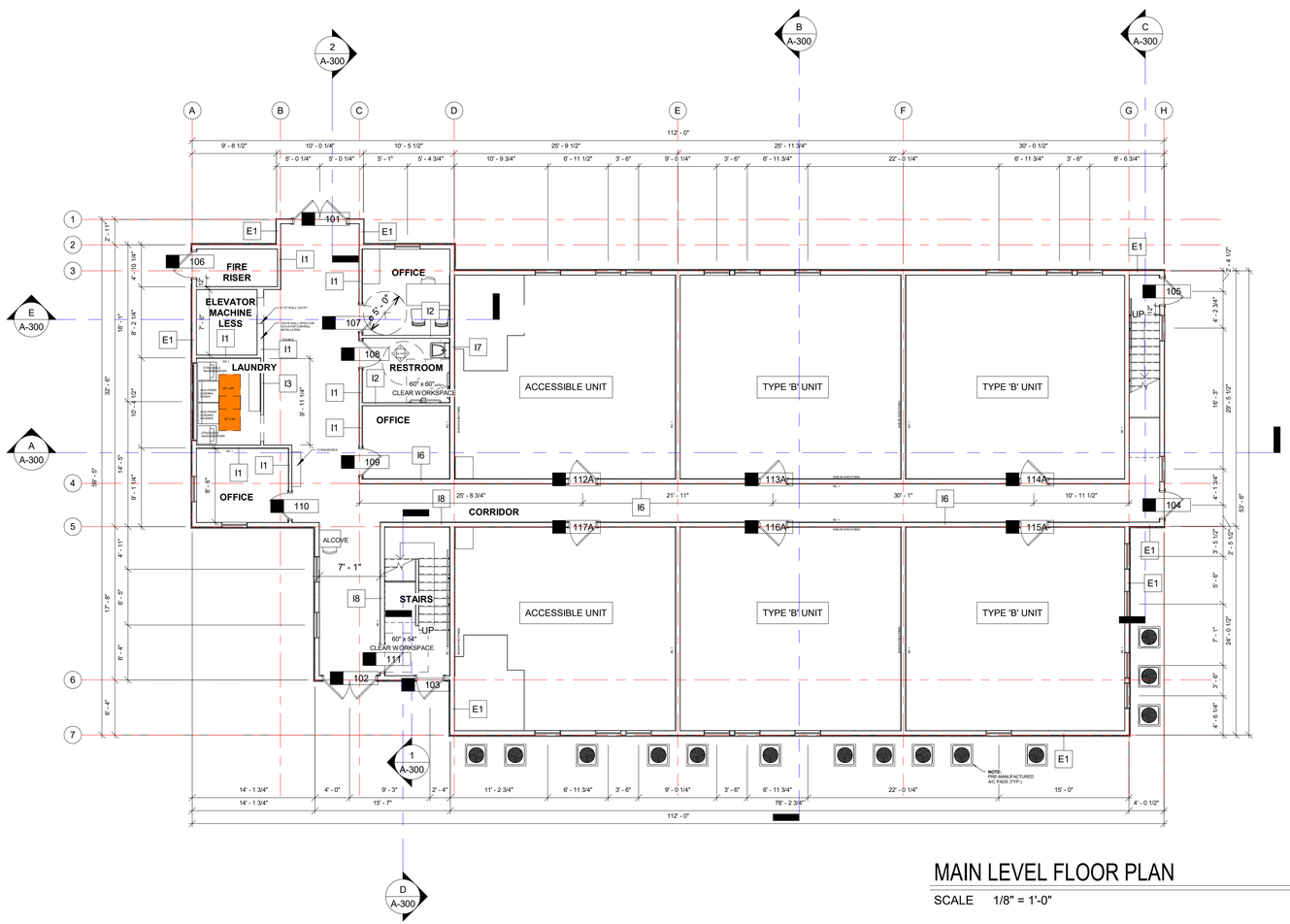

MAIN LEVEL FLOOR PLAN
SCALE 1/8" = 1'-0"

DEKOLD ARCHITECTURE INC.
1975 Belmont Ave, Idaho Falls, ID. 83404
83402
(208) 206-7338
www.behance.net/kevindekold
kevindekold@hotmail.com

STATE OF UTAH
KEVIN DEKOLD
No. 7164959-0301
1/22/2025
LICENSED ARCHITECT

Civil
Cache Landmark
95 W Golf Course Rd St. 101
Logan, UT 84321
(435) 713-0099

Landscape
Cache Landmark
95 W Golf Course Rd St. 101
Logan, UT 84321
(435) 713-0099

Structural
Calder Richards Consulting Engineers
1805 South Redwood Road Ste 102
Salt Lake City, UT 84104
(801) 466-1899

Mechanical
Royal
1837 S E Bay Blvd
Provo, UT 84606
(801) 375-2228

Electrical
BNA Consulting
4225 W Lake Park Blvd Sl. 275
West Valley City, UT 841-21
(435) 628-3670

AIS - WEST VALLEY
EXPANSION INDEPENDANT LIVING BUILDING
2574 S. REDWOOD RD.
WEST VALLEY CITY, UT 84119

REVISIONS:
1 03-19-25
2 00-00-00
3 00-00-00

SHEET NUMBER:
A-101
3/19/2025

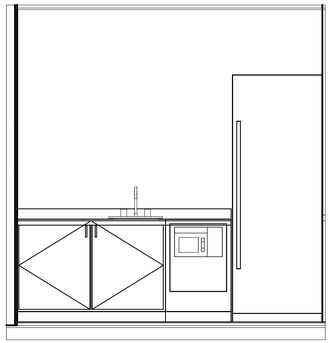

2 KITCHENETTE
SCALE: 1/2" = 1'-0"

FLOOR PLAN LEGEND

WALL TAG — XX — WALL TYPE

DOOR TAG — XXXX — DOOR NUMBER

GENERAL NOTES

A. EXISTING FIELD CONDITIONS MAY VARY FROM CONDITIONS ANTICIPATED DURING PREPARATION OF THESE DOCUMENTS. IF CONDITIONS VARY AND WARRANT FURTHER RESEARCH AND IDENTIFICATION OF SUBSEQUENT ISSUES, NOTIFY THE OWNER AND ARCHITECT IMMEDIATELY.

B. SEE SHEETS GI003 WALL TYPES. ALL FIRE AND SOUND WALLS CONTINUOUS BETWEEN FIRE FLOORS AND CEILINGS.

C. CONTRACTOR IS RESPONSIBLE TO COORDINATE ALL WORK. WHEN CONFLICT ARISES, NOTIFY THE ARCHITECT IMMEDIATELY.

D. CONTROL JOINTS ARE SHOWN ON EXTERIOR ELEVATION SHEETS, U.N.O.

E. PROVIDE BACKING FOR ALL FIXTURES.

F. PROVIDE BACKING FOR FUTURE WALL MOUNTED GRAB BARS AT WATER CLOSETS, TUBS AND SHOWERS. AT WATER CLOSET LOCATIONS WHERE STANDARD GRAB BARS ARE NOT FEASIBLE BACKING SHALL BE PROVIDED FOR SWING UP GRAB BARS. (REFER TO ANSI 1004.11.1.1 FOR SWING UP GRAB BAR REQUIREMENTS)

G. DIMENSIONS ARE TO FACE OF SHEATHING/ EDGE CONCRETE AT EXTERIOR WALLS, TO FACE OF STUD AT INTERIOR WALLS, TO CENTER LINE OF COLUMNS, TO CENTER LINE OF ASSEMBLY AT PARTITION WALLS. FIELD VERIFY ALL DIMENSIONS.

H. SEE ENLARGED UNIT PLANS FOR UNIT DIMENSIONS, WALL TYPES & DOOR TYPES.

I. USE GLASS MAT DRYWALL IN ALL WET AREA WALLS TO RECEIVE NONABSORBENT FINISHES. USE WATER RESISTANT DRYWALL IN ALL OTHER WET AREAS WALL AND CEILING ASSEMBLIES.

J. REFER TO GI-001 & GI-002 FOR ACCESSIBILITY AND CLEARANCE DIAGRAMS.

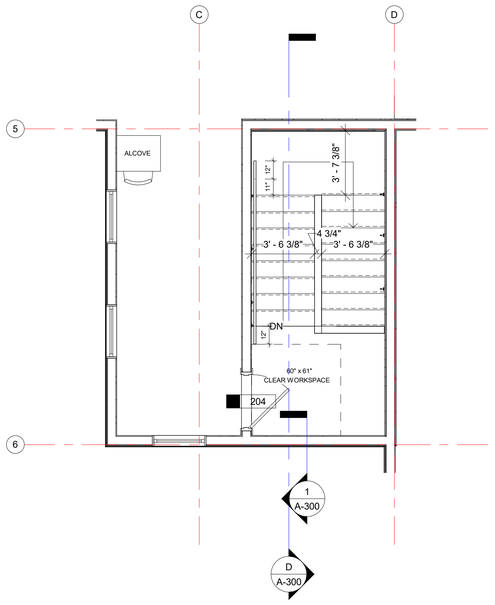

STAIRS SECOND LEVEL

SCALE 1/4" = 1'-0"

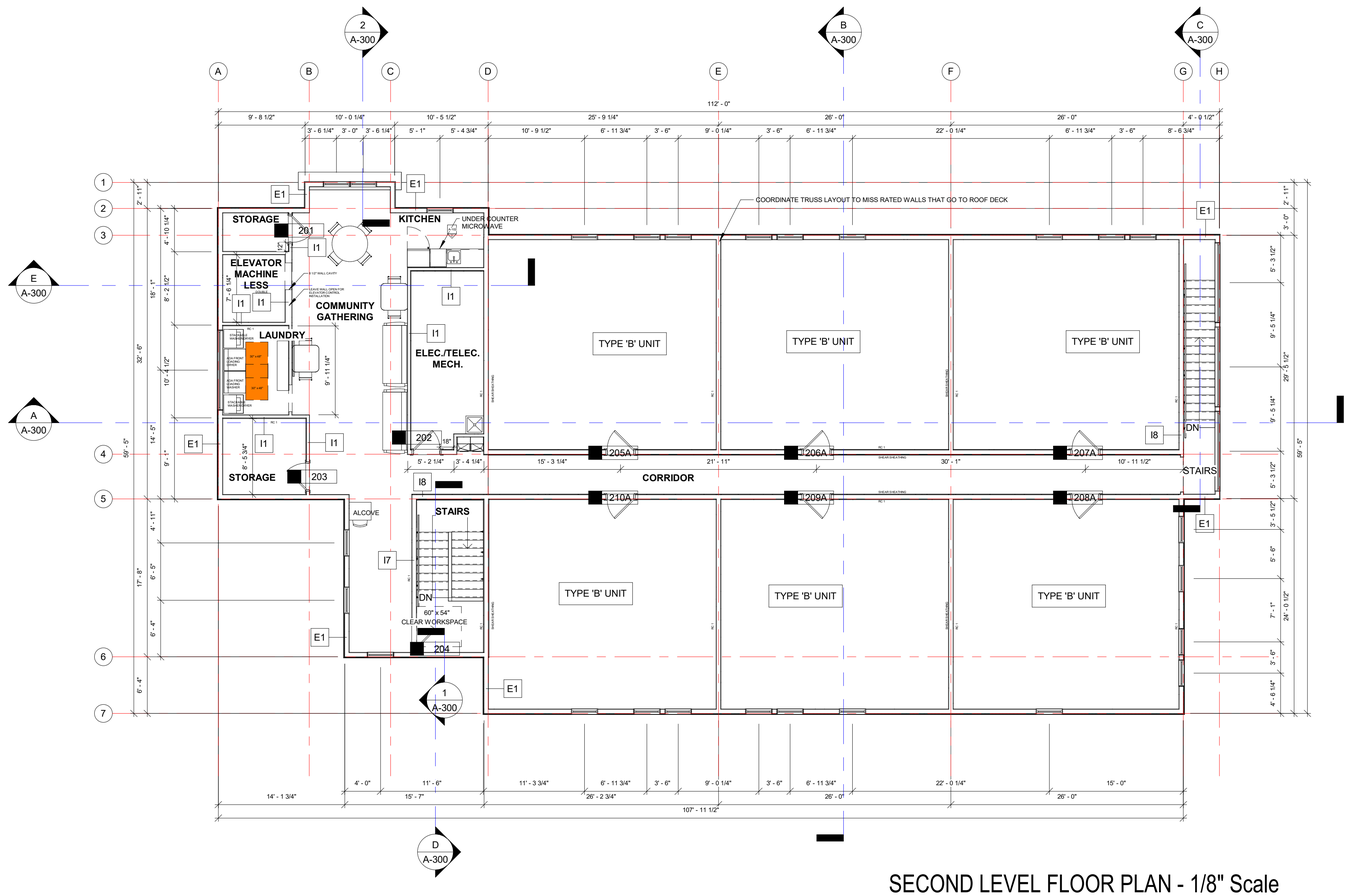

SECOND LEVEL FLOOR PLAN - 1/8" Scale

SCALE 1/8" = 1'-0"

DEKOLD ARCHITECTURE INC.
1975 Belmont Ave, Idaho Falls, ID, 83404
83402
(208)206-7338
www.behance.net/kevindekold
kevindekold@hotmail.com

STATE OF UTAH
KEVIN DEKOLD
No. 7164959-0301
1/22/2025
LICENSED ARCHITECT

Civil
Cache Landmark
95 W Golf Course Rd St. 101
Logan, UT 84321
(435) 713-0099

Landscape
Cache Landmark
95 W Golf Course Rd St. 101
Logan, UT 84321
(435) 713-0099

Structural
Calder Richards Consulting Engineers
1805 South Redwood Road Ste 102
Salt Lake City, UT 84104
(801) 466-1899

Mechanical
Royal
1837 S E Bay Blvd
Provo, UT 84606
(801) 375-2228

Electrical
BNA Consulting
4225 W Lake Park Blvd St. 275
West Valley City, UT 84121
(435) 628-3870

AIS - WEST VALLEY
EXPANSION INDEPENDANT LIVING BUILDING
2574 S. REDWOOD RD.
WEST VALLEY CITY, UT 84119

REVISIONS:
1 03-19-25
2 00-00-00
3 00-00-00

SHEET NUMBER:
A-102
3/19/2025

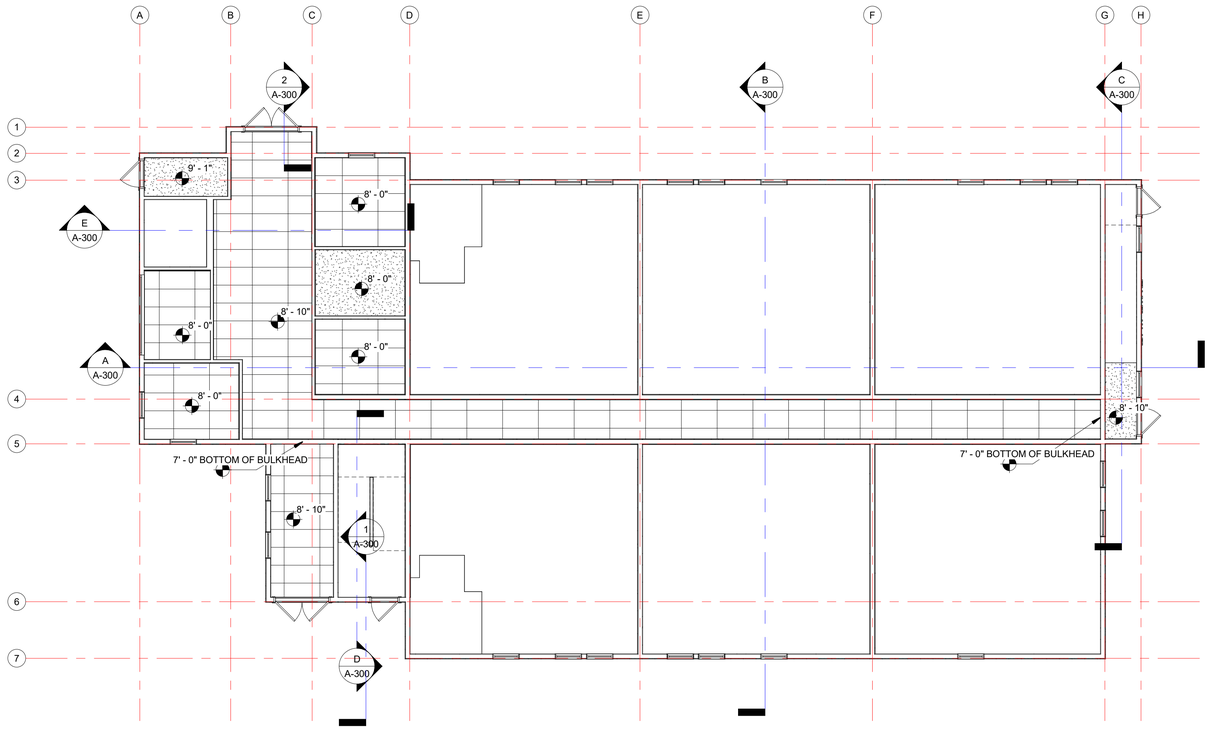

MAIN LEVEL - RCP

SCALE 1/8" = 1'-0"

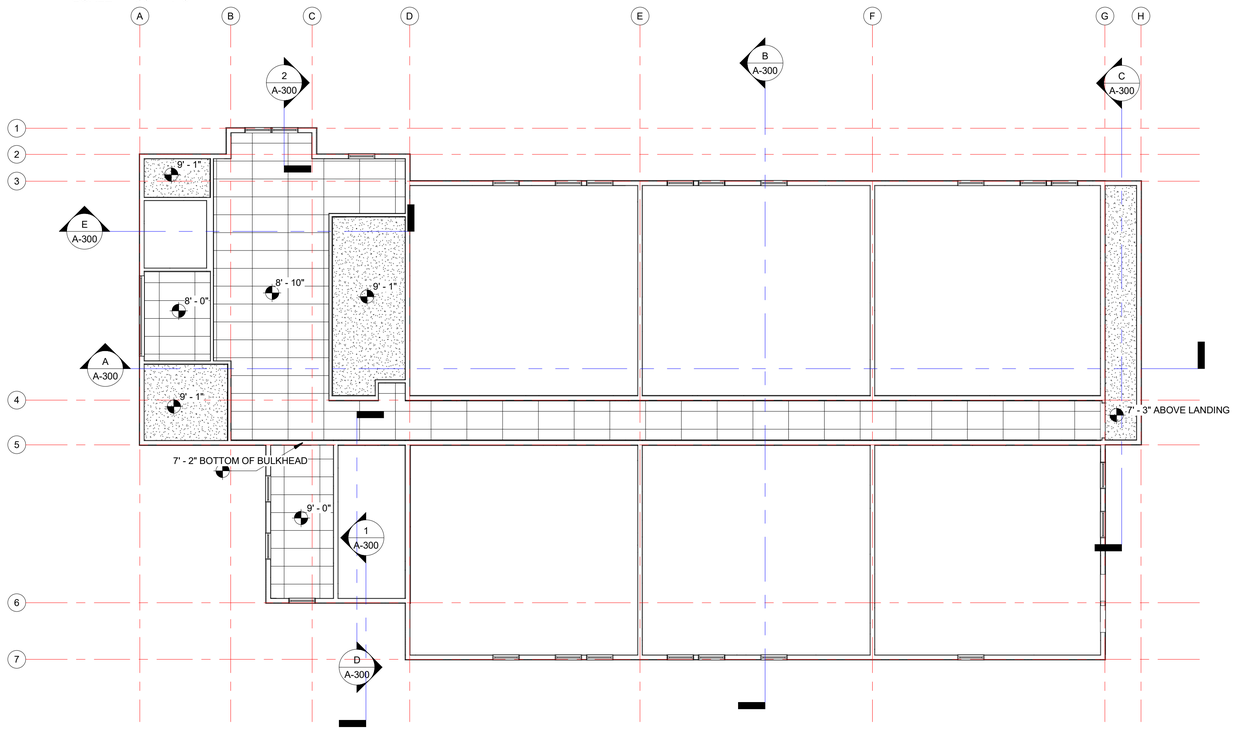

SECOND LEVEL - RCP

SCALE 1/8" = 1'-0"

CEILING PLAN GENERAL NOTES

1. EXISTING FIELD CONDITIONS MAY VARY FROM CONDITIONS ANTICIPATED DURING PREPARATION OF THESE DOCUMENTS. IF CONDITIONS VARY AND WARRANT FURTHER RESEARCH AND IDENTIFICATION OF SUBSEQUENT ISSUES, NOTIFY THE OWNER AND ARCHITECT IMMEDIATELY.
2. CONTRACTOR IS RESPONSIBLE TO COORDINATE ALL WORK. WHEN CONFLICT ARISES, NOTIFY THE ARCHITECT IMMEDIATELY.
3. PROVIDE BACKING FOR ALL FIXTURES.
4. DIMENSIONS ARE TO FACE OF STUD. FIELD VERIFY ALL DIMENSIONS.
5. SEE ENLARGED UNIT PLANS FOR UNIT DIMENSIONS, WALL TYPES & DOOR TYPES.
6. CEILING TILE SHALL BE LISTED AND TESTED AMERICAN SOCIETY OF TESTING MATERIALS (ASTM) E 84 AND HAVE A FLAME SPREAD OF 0-25 AND A SMOKE INDEX OF 0-450. IF THE CEILING TILE IS A COMPONENT PART OF A PLENUM SYSTEM THEN IT SHALL BE LISTED AND TESTED AMERICAN SOCIETY OF TESTING MATERIALS (ASTM) E 84 AND HAVE A FLAME SPREAD OF 0-25 AND A SMOKE INDEX OF 0-50.
7. PER IBC 718.2.2 REQUIRES FIRE STOPPING TO SEPARATE THE COMBUSTIBLE WALL CAVITY FROM THE DROPPED CEILING AT THE CEILING LINE.
8. WHERE THE CEILING IS BEING SUSPENDED BELOW A FIRE RATED FLOOR/CEILING ASSEMBLY AND PER IBC 803 REQUIRES THAT THE MATERIALS INCLUDING THE GYPSUM CEILING BE PROVIDED WITH CLASS 'A' FINISH MATERIALS.
9. WHERE THE CEILING IS BEING SUSPENDED BELOW A FIRE RATED FLOOR/CEILING ASSEMBLY AND PER IBC 803 REQUIRES THAT THE HANGERS AND ASSEMBLY MEMBERS SHALL BE OF NON-COMBUSTIBLE CONSTRUCTION.
10. COORDINATE DROP CEILINGS WITH MECHANICAL AND ELECTRICAL.

RCP LEGEND

- CEILING ELEVATION
- GYP. BD. CEILING
- ACOUSTIC GRID CEILING

DIMENSION NOTE:

SITE VERIFY ALL DIMENSION BEFORE ORDERING MATERIALS AND COMMENCING ANY WORK. REPORT ANY SIGNIFICANT DISCREPANCIES TO THE DESIGNER.

DEKOLD ARCHITECTURE INC.
1975 Belmont Ave, Idaho Falls, ID. 83404
83402
(208) 206-7338
www.behance.net/kevindekold
kevindekold@hotmail.com

STATE OF UTAH
KEVIN DEKOLD
No. 7164959-0301
LICENSED ARCHITECT
1/22/2025

Civil
Cache Landmark
95 W Golf Course Rd St. 101
Logan, UT 84321
(435) 713-0099

Landscape
Cache Landmark
95 W Golf Course Rd St. 101
Logan, UT 84321
(435) 713-0099

Structural
Calder Richards Consulting Engineers
1805 South Redwood Road Ste 102
Salt Lake City, UT 84104
(801) 466-1899

Mechanical
Royal
1837 S E Bay Blvd
Provo, UT 84606
(801) 375-2228

Electrical
BNA Consulting
4225 W Lake Park Blvd St. 275
West Valley City, UT 84121
(435) 628-3870

AIS - WEST VALLEY

EXPANSION INDEPENDANT LIVING BUILDING

2574 S. REDWOOD RD.
WEST VALLEY CITY, UT 84119

REVISIONS:
1 03-19-25
2 00-00-00
3 00-00-00

SHEET NUMBER:
A-110
3/19/2025

ROOF PLAN GENERAL NOTES

1. EXISTING FIELD CONDITIONS MAY VARY FROM CONDITIONS ANTICIPATED DURING PREPARATION OF THESE DOCUMENTS. IF CONDITIONS VARY AND WARRANT FURTHER RESEARCH AND IDENTIFICATION OF SUBSEQUENT ISSUES, NOTIFY THE OWNER AND ARCHITECT IMMEDIATELY.

2. CONTRACTOR IS RESPONSIBLE TO COORDINATE ALL WORK. WHEN CONFLICT ARISES, NOTIFY THE ARCHITECT IMMEDIATELY.

3. DIMENSIONS ARE TO FACE OF STUD AT EXTERIOR WALLS TO FACE OF FRAMING AT ROOF ASSEMBLIES. FIELD VERIFY ALL DIMENSIONS.

4. CONTRACTOR SHALL VERIFY THAT THE TRUSS MANUFACTURER'S LAYOUT AND DESIGN IS ACCORDING TO THE FRAMING PLANS AND PROJECT REQUIREMENTS.

MATERIAL LEGEND	
NUMBER	MATERIAL
09	TPO MEMBRANE ROOF
14	CONCRETE PAVER TPO SEPARATION LAYER
15	ROOF DRAIN

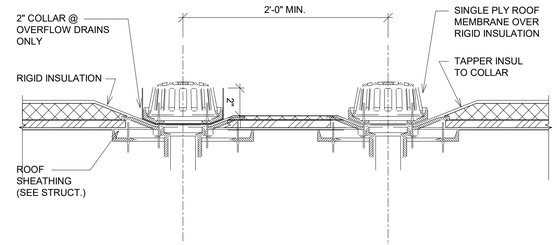

ROOF DRAIN SECTION DETAIL

ROOF PLAN

SCALE 1/4" = 1'-0"

DEKOLD ARCHITECTURE INC.
1975 Belmont Ave, Idaho Falls, ID. 83404
83402
(208) 206-7338
www.behance.net/kevindekold
kevindekold@hotmail.com

STATE OF UTAH
KEVIN DEKOLD
No. 7164959-0301
1/22/2025
LICENSED ARCHITECT

Civil
Cache Landmark
95 W Golf Course Rd St. 101
Logan UT 84321
(435) 713-0099

Landscape
Cache Landmark
95 W Golf Course Rd St. 101
Logan UT 84321
(435) 713-0099

Structural
Calder Richards Consulting Engineers
1805 South Redwood Road Ste 102
Salt Lake City, UT 84104
(801) 466-1899

Mechanical
Royal
1837 S E Bay Blvd
Provo, UT 84606
(801) 375-2228

Electrical
BNA Consulting
4225 W Lake Park Blvd St. 275
West Valley City, UT 84121
(435) 628-3870

AIS - WEST VALLEY
EXPANSION INDEPENDANT LIVING BUILDING
2574 S. REDWOOD RD.
WEST VALLEY CITY, UT 84119

REVISIONS:
1 03-19-25
2 00-00-00
3 00-00-00

SHEET NUMBER:
A-120
3/19/2025

3/19/2025 4:21:10 PM

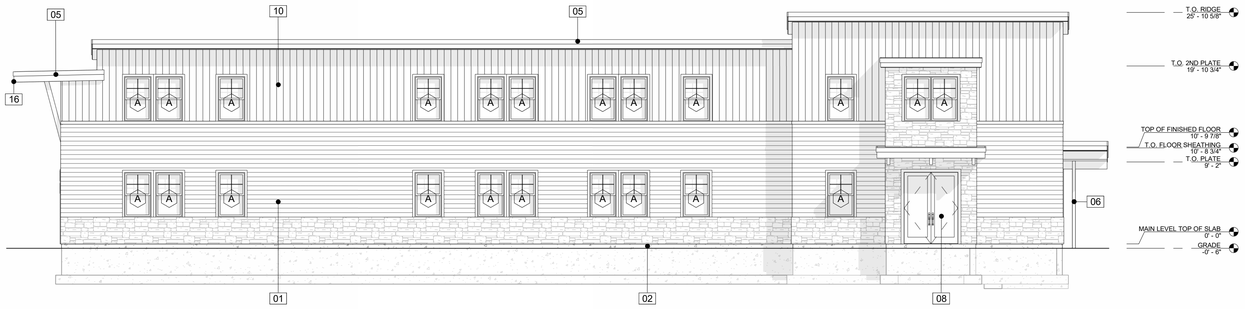

FRONT ELEVATION

SCALE 1/8" = 1'-0"

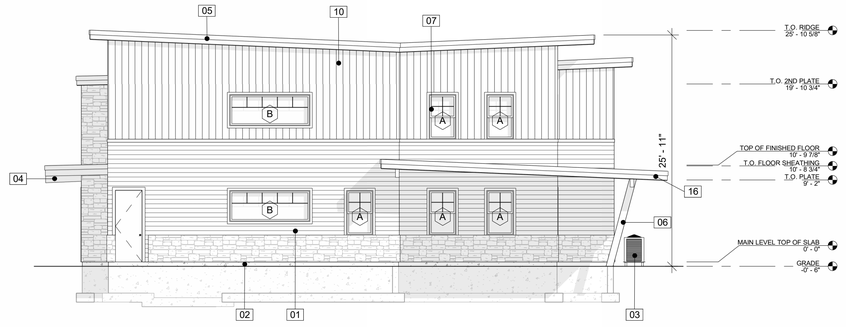

RIGHT ELEVATION

SCALE 1/8" = 1'-0"

GENERAL NOTES

A. GENERAL CONTRACTOR SHALL VERIFY ALL CONDITIONS AND DIMENSIONS PRIOR TO CONSTRUCTION. REPORT ANY SIGNIFICANT DISCREPANCIES TO THE ARCHITECT.

B. COORDINATE INSTALLATIONS OF ALL "AFTER CONTRACT" ASSEMBLIES WITH OWNER PRIOR TO CONSTRUCTION OF ADJOINING OR RELATED STRUCTURE.

C. ROOFING TO BE CLASS 'B' MINIMUM.

D. PROVIDE METAL FLASHING AND COUNTER FLASHING AS REQUIRED TO PROVIDE WATERPROOF BUILDING. NO PLASTIC FLASHING ALLOWED.

E. SEE MECHANICAL SHEETS FOR BATHROOM EXHAUST, CLOTHES DRYER VENTS, AND OTHER PENETRATIONS IN EXTERIOR WALLS AND ROOF. ROUTE TO BACK ELEVATION ROOF.

F. SEE PLUMBING SHEETS FOR GAS METER AND SECONDARY ROOF DRAINAGE LOCATIONS ALONG EXTERIOR WALLS.

G. SEE ELECTRICAL SHEETS FOR ELECTRICAL METER, GEAR , AND EXTERIOR LIGHT FIXTURE LOCATIONS.

H. PROVIDE PRE-FINISHED CUT ALUMINUM NUMBERS AND LETTERS ON THE FRONT, EXTERIOR OF THE BUILDING INDICATING THE BUILDING ADDRESS ASSIGNED BY THE CITY IN ACCORDANCE WITH CURRENT CITY ORDINANCE. COLOR OF NUMBERS AND LETTERS TO CONTRAST SIGNIFICANTLY WITH BACKGROUND COLOR OF EXTERIOR WALL. THE ADDRESS MUST BE PERMANENTLY FASTENED TO THE EXTERIOR OF THE BUILDING PRIOR TO OCCUPANCY. PER IBC 502.1 NEW AND EXISTING BUILDINGS SHALL BE PROVIDED WITH APPROVED ADDRESS NUMBERS OR LETTERS. EACH CHARACTER SHALL BE NOT LESS THAN 4" INCHES (102 MM) IN HEIGHT AND NOT LESS THAN 0.5 INCHES (12.7 MM) IN WIDTH. THEY SHALL BE INSTALLED ON A CONTRASTING BACKGROUND AND BE PLAINLY VISIBLE FROM THE STREET OR ROAD FRONTING THE PROPERTY. WHEN REQUIRED BY THE FIRE CODE OFFICAL, ADDRESS NUMBERS SHALL BE PROVIDED IN ADDITIONAL APPROVED LOCATIONS TO FACILITATE EMERGENCY RESPONSE. WHERE ACCESS IS BY MEANS OF A PRIVATE ROAD AND BUILDING ADDRESS CANNOT BE VIEWED FROM THE PUBLIC WAY, A MONUMENT, POLE OR OTHER APPROVED SIGN OR MEANS SHALL BE USED TO IDENTIFY THE STRUCTURE. ADDRESS NUMBERS SHALL BE MAINTAINED.

I. THE OWNER IS RESPONSIBLE TO OBTAIN A SEPARATE PERMIT FOR ANY EXTERIOR SIGNS IN ACCORDANCE WITH THE CURRENT CITY SIGN ORDINANCE

MATERIAL LEGEND	
NUMBER	MATERIAL
01	HORIZONTAL HARDIE COMPOSITE
02	EXPOSED FOUNDATION
03	CONDENSERS SCREENED WITH LANDSCAPING
04	STAINED WOOD BEAM
05	ARCHITECTURAL METAL
06	BLACK STEEL COLUMN
07	BLACK VINYL FRAME WINDOWS
08	BLACK METAL FULL LITE DOORS
09	TPO MEMBRANE ROOF
10	VERTICAL METAL SIDING
16	METAL SOFFIT AND FASCIA (TYP.)



EXTERIOR HVAC TRIM TO BE LOW PROFILE, LEAST OBTRUSIVE, ARRANGED AS TIGHT AS POSSIBLE LIKE GROUP OF 3 ON RIGHT, COLOR TO BLEND WITH SIDING THEY'RE WITHIN



LEFT ELEVATION

SCALE 1/8" = 1'-0"

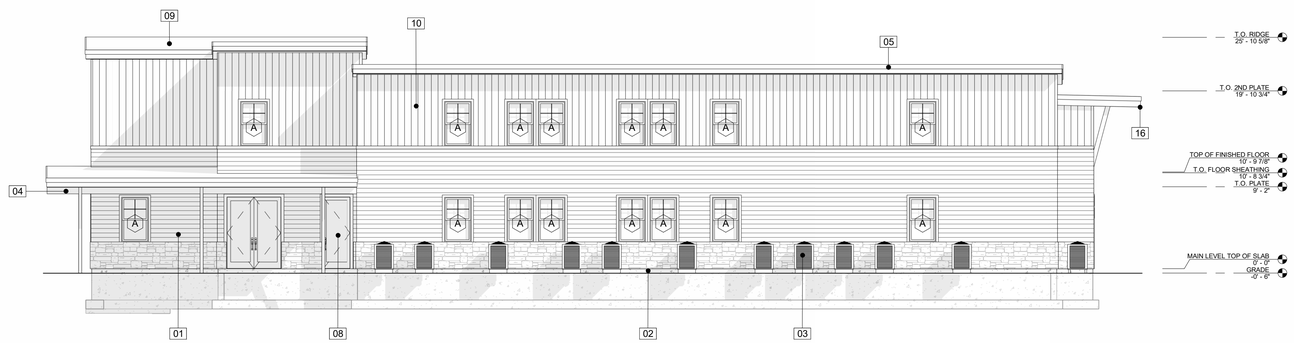

BACK ELEVATION

SCALE 1/8" = 1'-0"

DEKOLD ARCHITECTURE INC.
1975 Belmont Ave, Idaho Falls, ID. 83404
83402
(208) 206-7338
www.behance.net/kevindekold
kevindekold@hotmail.com

STATE OF UTAH
KEVIN DEKOLD
No. 7164959-0301
1/22/2025
LICENSED ARCHITECT

Civil
Cache Landmark
95 W Golf Course Rd St. 101
Logan, UT 84321
(435) 713-0099

Landscape
Cache Landmark
95 W Golf Course Rd St. 101
Logan, UT 84321
(435) 713-0099

Structural
Calder Richards Consulting Engineers
1805 South Redwood Road Ste 102
South Salt Lake, UT 84104
(801) 466-1899

Mechanical
Royal
1637 S E Bay Blvd
Provo, UT 84606
(801) 375-2228

Electrical
BNA Consulting
4225 W Lake Park Blvd St. 275
West Valley City, UT 84121
(435) 628-3670

AIS - WEST VALLEY

EXPANSION INDEPENDANT LIVING BUILDING

2574 S. REDWOOD RD.
WEST VALLEY CITY, UT 84119

REVISIONS:

1	1	03-19-25
2	2	00-00-00
3	3	00-00-00

SHEET NUMBER:

A-200

3/19/2025

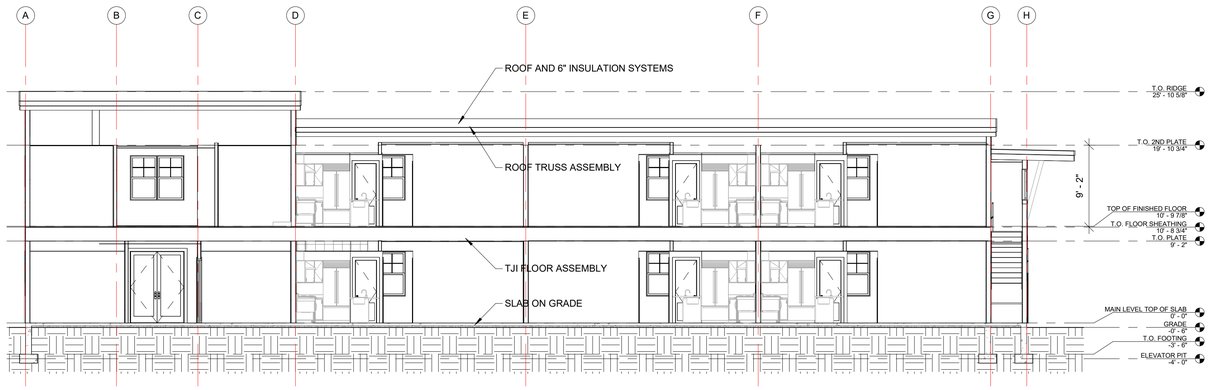

A SECTION A
SCALE: 1/8" = 1'-0"

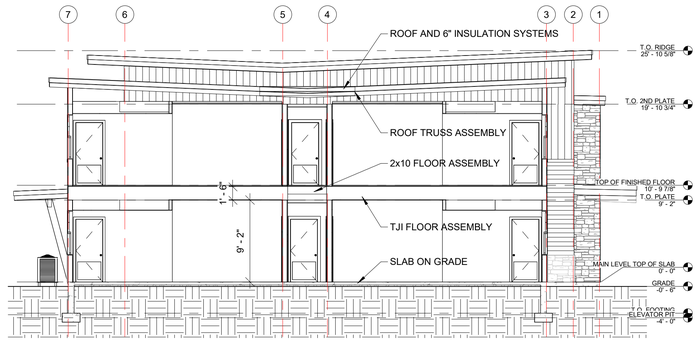

B SECTION B
SCALE: 1/8" = 1'-0"

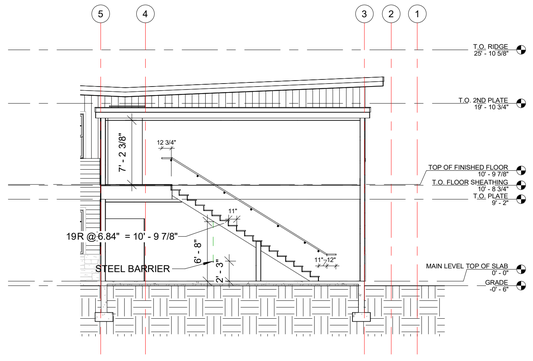

C SECTION C - EAST STAIR
SCALE: 1/8" = 1'-0"

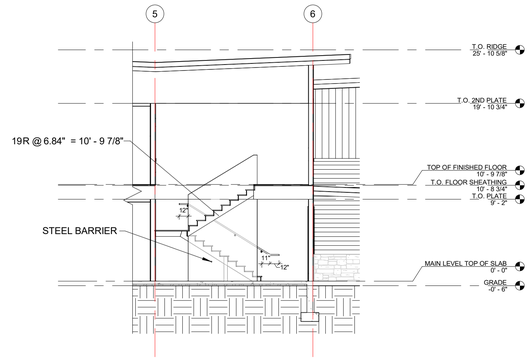

D SECTION D - SOUTHWEST STAIR
SCALE: 1/8" = 1'-0"

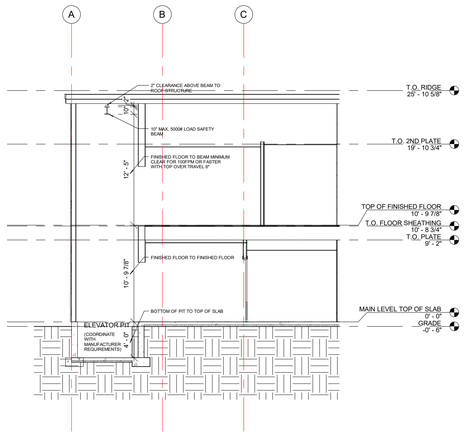

E SECTION E - ELEVATOR SHAFT
SCALE: 1/8" = 1'-0"

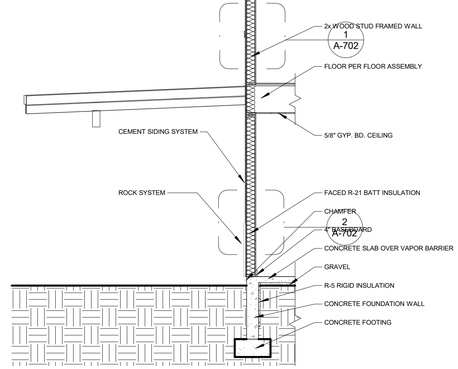

1 WALL SECTION 1
SCALE: 1/4" = 1'-0"

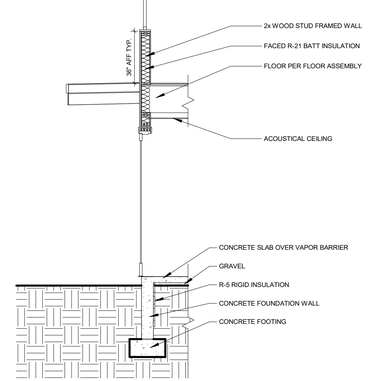

2 WALL SECTION 2
SCALE: 1/4" = 1'-0"

DEKOLD ARCHITECTURE INC.
1975 Belmont Ave, Idaho Falls, ID. 83404
83402
(208) 206-7338
www.behance.net/kevindekold
kevindekold@hotmail.com

STATE OF UTAH
KEVIN DEKOLD
No. 7164959-0301
1/22/2025
LICENSED ARCHITECT

Civil
Cache Landmark
95 W Golf Course Rd St. 101
Logan, UT 84321
(435) 713-0099

Landscape
Cache Landmark
95 W Golf Course Rd St. 101
Logan, UT 84321
(435) 713-0099

Structural
Calder Richards Consulting Engineers
1805 South Redwood Road Ste 102
Salt Lake City, UT 84104
(801) 466-1899

Mechanical
Royal
1637 S E Bay Blvd
Provo, UT 84606
(801) 375-2228

Electrical
BNA Consulting
4225 W Lake Park Blvd St. 275
West Valley City, UT 84121
(435) 628-3670

AIS - WEST VALLEY
EXPANSION INDEPENDANT LIVING BUILDING
2574 S. REDWOOD RD.
WEST VALLEY CITY, UT 84119

REVISIONS:
1 03-19-25
2 00-00-00
3 00-00-00

SHEET NUMBER:
A-300
3/19/2025

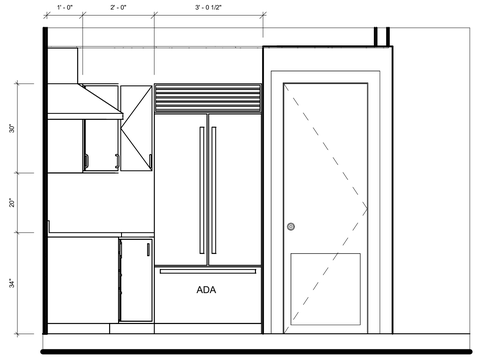

A UNIT KITCHEN - A
SCALE: 1/2" = 1'-0"

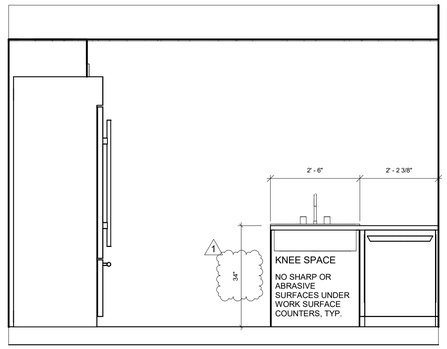

B UNIT KITCHEN - B
SCALE: 1/2" = 1'-0"

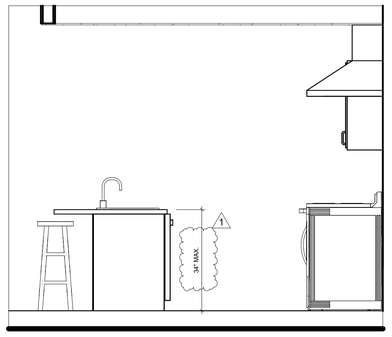

C UNIT KITCHEN - C
SCALE: 1/2" = 1'-0"

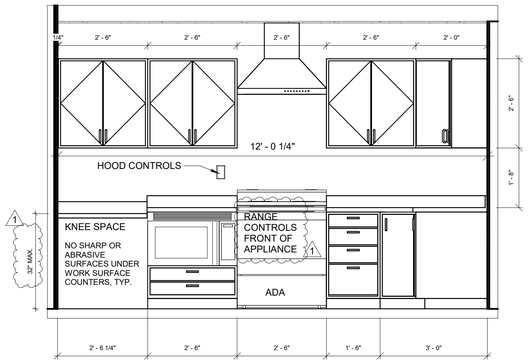

D UNIT KITCHEN - D
SCALE: 1/2" = 1'-0"

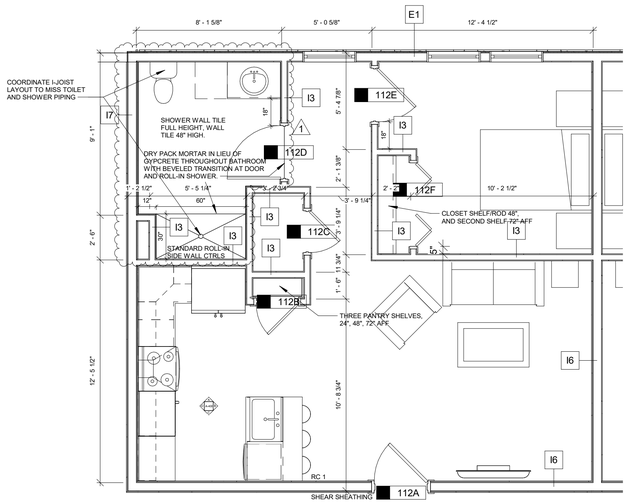

LIVING UNITS - ACCESSIBLE AND TYPE 'B'
SCALE 1/4" = 1'-0"

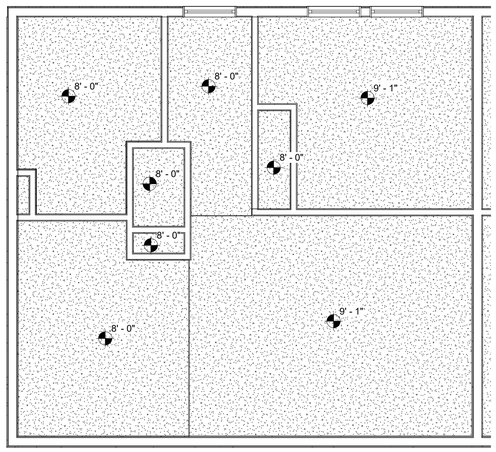

RCP - ACCESSIBLE AND TYPE 'B'
SCALE 1/4" = 1'-0"



CLEARANCES – ACCESSIBLE AND TYPE 'B'
SCALE 1/4" = 1'-0"

DEKOLD ARCHITECTURE INC.
1975 Belmont Ave, Idaho Falls, ID. 83404
83402
(208) 206-7338
www.behance.net/kevindekold
kevindekold@hotmail.com

STATE OF UTAH
KEVIN DEKOLD
No. 7164959-0301
1/22/2025
LICENSED ARCHITECT

Civil
Cache Landmark
95 W Golf Course Rd St. 101
Logan, UT 84321
(435) 713-0099

Landscape
Cache Landmark
95 W Golf Course Rd St. 101
Logan, UT 84321
(435) 713-0099

Structural
Calder Richards Consulting Engineers
1805 South Redwood Road Ste 102
Salt Lake City, UT 84104
(801) 466-1899

Mechanical
Royal
1837 S. E Bay Blvd
Provo, UT 84606
(801) 375-2228

Electrical
BNA Consulting
4225 W Lake Park Blvd St. 275
West Valley City, UT 84121
(435) 628-3870

AIS - WEST VALLEY
EXPANSION INDEPENDANT LIVING BUILDING
2574 S. REDWOOD RD.
WEST VALLEY CITY, UT 84119

REVISIONS:
1 03-19-25
2 00-00-00
3 00-00-00

SHEET NUMBER:
A-400
3/19/2025

DOOR SCHEDULE						
MARK	TYPE MARK	WIDTH	HEIGHT	THICKNESS	FIRE RATING	COMMENTS
101	PR-GL	6' - 0"	8' - 0"	1 3/4"		SAFETY GLAZING
102	PR-GL	6' - 0"	8' - 0"	1 3/4"		SAFETY GLAZING
103	P-GL1	3' - 0"	8' - 0"	1 3/4"	20 MINUTES	
104	P-GL1	3' - 0"	8' - 0"	1 3/4"	20 MINUTES	SAFETY GLAZING
105	P-GL1	3' - 0"	8' - 0"	1 3/4"	20 MINUTES	SAFETY GLAZING
106	P-HM1	3' - 0"	8' - 0"	1 3/4"		
107	P-SC1	3' - 0"	7' - 0"	1 3/4"	20 MINUTES	
108	P-SC1	3' - 0"	7' - 0"	1 3/4"	20 MINUTES	
109	P-SC1	3' - 0"	7' - 0"	1 3/4"	20 MINUTES	
110	P-SC1	3' - 0"	7' - 0"	1 3/4"	20 MINUTES	
111	P-SC1	3' - 0"	7' - 0"	1 3/4"	20 MINUTES	
112A	P-SC1	3' - 0"	7' - 0"	1 3/4"	20 MINUTES	SMOKE/DRAFT PROTECTION, S RATING, COMPLY WITH UL1784
112B	P-HC2	2' - 4"	7' - 0"	1 3/8"		
112C	P-HC2	2' - 4"	7' - 0"	1 3/8"		
112D	P-HC1	3' - 0"	7' - 0"	1 3/8"		
112E	P-HC1	3' - 0"	7' - 0"	1 3/8"		
112F	PR-HC2	4' - 8"	7' - 0"	1 3/8"		
113A	P-SC1	3' - 0"	7' - 0"	1 3/4"	20 MINUTES	SMOKE/DRAFT PROTECTION, S RATING, COMPLY WITH UL1784
113B	P-HC2	2' - 4"	7' - 0"	1 3/8"		
113C	P-HC2	2' - 4"	7' - 0"	1 3/8"		
113D	P-HC1	3' - 0"	7' - 0"	1 3/8"		
113E	P-HC1	3' - 0"	7' - 0"	1 3/8"		
113F	PR-HC1	4' - 8"	7' - 0"	1 3/8"		
114A	P-SC1	3' - 0"	7' - 0"	1 3/4"	20 MINUTES	SMOKE/DRAFT PROTECTION, S RATING, COMPLY WITH UL1784
114B	P-HC2	2' - 4"	7' - 0"	1 3/8"		
114C	P-HC2	2' - 4"	7' - 0"	1 3/8"		
114D	P-HC1	3' - 0"	7' - 0"	1 3/8"		
114E	P-HC1	3' - 0"	7' - 0"	1 3/8"		
114F	PR-HC1	4' - 8"	7' - 0"	1 3/8"		
115A	P-SC1	3' - 0"	7' - 0"	1 3/4"	20 MINUTES	SMOKE/DRAFT PROTECTION, S RATING, COMPLY WITH UL1784
115B	P-HC2	2' - 4"	7' - 0"	1 3/8"		
115C	P-HC2	2' - 4"	7' - 0"	1 3/8"		
115D	P-HC1	3' - 0"	7' - 0"	1 3/8"		
115E	P-HC1	3' - 0"	7' - 0"	1 3/8"		
115F	PR-HC1	4' - 8"	7' - 0"	1 3/8"		
116A	P-SC1	3' - 0"	7' - 0"	1 3/4"	20 MINUTES	SMOKE/DRAFT PROTECTION, S RATING, COMPLY WITH UL1784
116B	P-HC2	2' - 4"	7' - 0"	1 3/8"		
116C	P-HC2	2' - 4"	7' - 0"	1 3/8"		
116D	P-HC1	3' - 0"	7' - 0"	1 3/8"		
116E	P-HC1	3' - 0"	7' - 0"	1 3/8"		
116F	PR-HC1	4' - 8"	7' - 0"	1 3/8"		
117A	P-SC1	3' - 0"	7' - 0"	1 3/4"	20 MINUTES	SMOKE/DRAFT PROTECTION, S RATING, COMPLY WITH UL1784
117B	P-HC2	2' - 4"	7' - 0"	1 3/8"		
117C	P-HC2	2' - 4"	7' - 0"	1 3/8"		
117D	P-HC1	3' - 0"	7' - 0"	1 3/8"		
117E	P-HC1	3' - 0"	7' - 0"	1 3/8"		
117F	PR-HC2	4' - 8"	7' - 0"	1 3/8"		
201	P-SC1	3' - 0"	7' - 0"	1 3/4"	20 MINUTES	
202	P-SC1	3' - 0"	7' - 0"	1 3/4"	20 MINUTES	
203	P-SC1	3' - 0"	7' - 0"	1 3/4"	20 MINUTES	
204	P-SC1	3' - 0"	7' - 0"	1 3/4"	20 MINUTES	
205A	P-SC1	3' - 0"	7' - 0"	1 3/4"	20 MINUTES	SMOKE/DRAFT PROTECTION, S RATING, COMPLY WITH UL1784
205B	P-HC2	2' - 4"	7' - 0"	1 3/8"		
205C	P-HC2	2' - 4"	7' - 0"	1 3/8"		
205D	P-HC1	3' - 0"	7' - 0"	1 3/8"		
205E	P-HC1	3' - 0"	7' - 0"	1 3/8"		
205F	PR-HC1	4' - 8"	7' - 0"	1 3/8"		
206A	P-SC1	3' - 0"	7' - 0"	1 3/4"	20 MINUTES	SMOKE/DRAFT PROTECTION, S RATING, COMPLY WITH UL1784
206B	P-HC2	2' - 4"	7' - 0"	1 3/8"		
206C	P-HC2	2' - 4"	7' - 0"	1 3/8"		
206D	P-HC1	3' - 0"	7' - 0"	1 3/8"		
206E	P-HC1	3' - 0"	7' - 0"	1 3/8"		
206F	PR-HC1	4' - 8"	7' - 0"	1 3/8"		
207A	P-SC1	3' - 0"	7' - 0"	1 3/4"	20 MINUTES	SMOKE/DRAFT PROTECTION, S RATING, COMPLY WITH UL1784
207B	P-HC2	2' - 4"	7' - 0"	1 3/8"		
207C	P-HC2	2' - 4"	7' - 0"	1 3/8"		
207D	P-HC1	3' - 0"	7' - 0"	1 3/8"		
207E	P-HC1	3' - 0"	7' - 0"	1 3/8"		
207F	PR-HC1	4' - 8"	7' - 0"	1 3/8"		
208A	P-SC1	3' - 0"	7' - 0"	1 3/4"	20 MINUTES	SMOKE/DRAFT PROTECTION, S RATING, COMPLY WITH UL1784
208B	P-HC2	2' - 4"	7' - 0"	1 3/8"		
208C	P-HC2	2' - 4"	7' - 0"	1 3/8"		
208D	P-HC1	3' - 0"	7' - 0"	1 3/8"		
208E	P-HC1	3' - 0"	7' - 0"	1 3/8"		
208F	PR-HC1	4' - 8"	7' - 0"	1 3/8"		
209A	P-SC1	3' - 0"	7' - 0"	1 3/4"	20 MINUTES	SMOKE/DRAFT PROTECTION, S RATING, COMPLY WITH UL1784
209B	P-HC2	2' - 4"	7' - 0"	1 3/8"		
209C	P-HC2	2' - 4"	7' - 0"	1 3/8"		
209D	P-HC1	3' - 0"	7' - 0"	1 3/8"		
209E	P-HC1	3' - 0"	7' - 0"	1 3/8"		
209F	PR-HC1	4' - 8"	7' - 0"	1 3/8"		
210A	P-SC1	3' - 0"	7' - 0"	1 3/4"	20 MINUTES	SMOKE/DRAFT PROTECTION, S RATING, COMPLY WITH UL1784
210B	P-HC2	2' - 4"	7' - 0"	1 3/8"		
210C	P-HC2	2' - 4"	7' - 0"	1 3/8"		
210D	P-HC1	3' - 0"	7' - 0"	1 3/8"		
210E	P-HC1	3' - 0"	7' - 0"	1 3/8"		
210F	PR-HC1	4' - 8"	7' - 0"	1 3/8"		

1

MAIN LEVEL WINDOW SCHEDULE				
Type Mark	WIDTH	HEIGHT	COUNT	COMMENTS
A	3' - 0"	5' - 0"	53	WINDOW OPERATING HARDWARE NO HIGHER THAN 48" AFF
B	9' - 0"	3' - 6"	5	

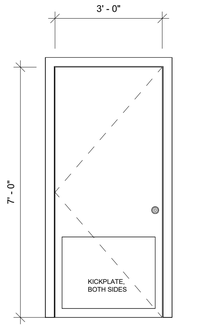

P-HC1

SOLID CORE MASONITE PRE-HUNG

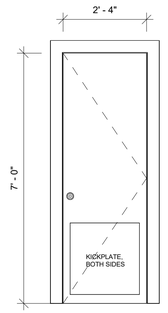

P-HC2

SOLID CORE MASONITE PRE-HUNG

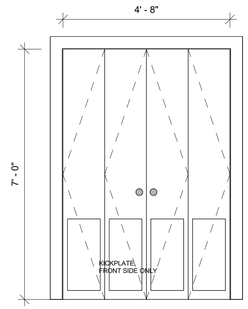

PR-HC2

SOLID CORE MASONITE PRE-HUNG

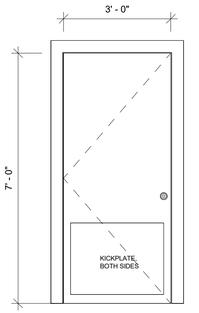

P-SC1

SOLID CORE WOOD

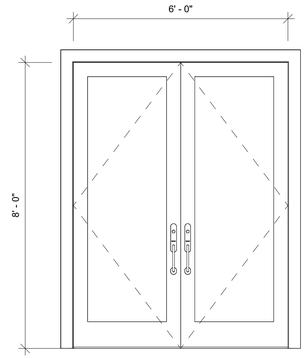

PR-GL

HOLLOW METAL FULL GLASS

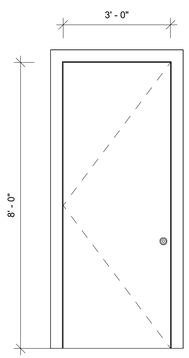

P-HM1

HOLLOW METAL

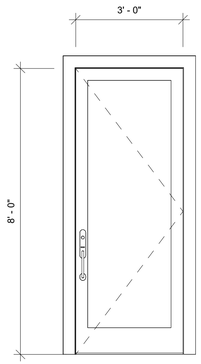

P-GL1

HOLLOW METAL FULL GLASS

DOOR TYPES

DEKOLD ARCHITECTURE INC.
1975 Belmont Ave, Idaho Falls, ID. 83404
83402
(208) 206-7338
www.behance.net/kevindekold
kevindekold@hotmail.com

STATE OF UTAH
KEVIN DEKOLD
LICENSED ARCHITECT
No. 7164959-0301
1/22/2025

Civil
Cache Landmark
95 W Golf Course Rd St. 101
Logan, UT 84321
(435) 713-0099

Landscape
Cache Landmark
95 W Golf Course Rd St. 101
Logan, UT 84321
(435) 713-0099

Structural
Calder Richards Consulting Engineers
1805 South Redwood Road Ste 102
Salt Lake City, UT 84104
(801) 466-1899

Mechanical
Royal
1837 S E Bay Blvd
Provo, UT 84606
(801) 375-2228

Electrical
BNA Consulting
4225 W Lake Park Blvd St. 275
West Valley City, UT 84121
(435) 628-3670

AIS - WEST VALLEY
EXPANSION INDEPENDANT LIVING BUILDING
2574 S. REDWOOD RD.
WEST VALLEY CITY, UT 84119

REVISIONS:

1	03-19-25
2	00-00-00
3	00-00-00

SHEET NUMBER:

A-600

3/19/2025

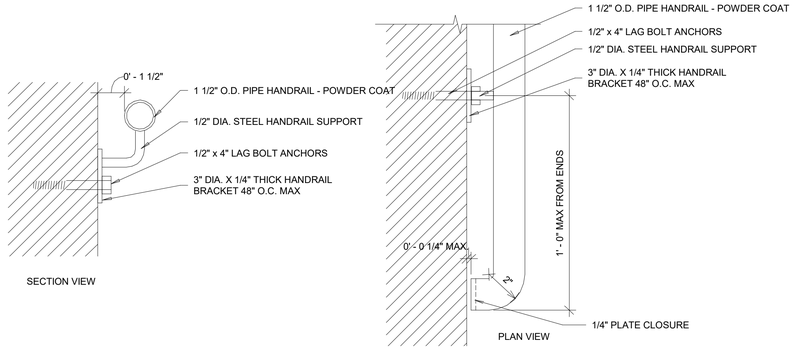

HANDRAIL DETAILS

3" = 1'-0"

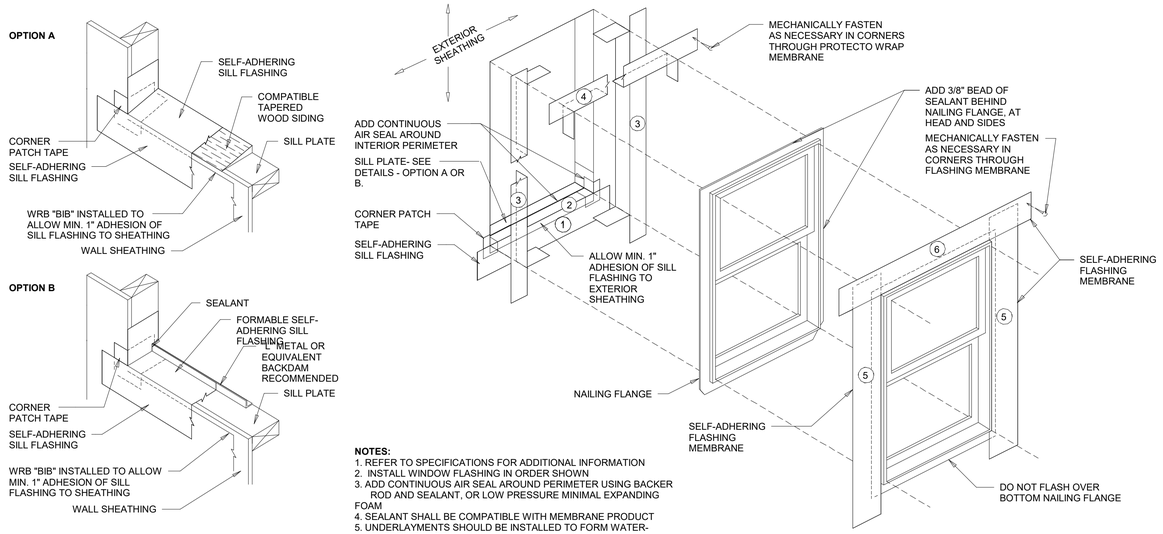

NOTES:
1. REFER TO SPECIFICATIONS FOR ADDITIONAL INFORMATION
2. INSTALL WINDOW FLASHING IN ORDER SHOWN
3. ADD CONTINUOUS AIR SEAL AROUND PERIMETER USING BACKER ROD AND SEALANT, OR LOW PRESSURE MINIMAL EXPANDING FOAM
4. SEALANT SHALL BE COMPATIBLE WITH MEMBRANE PRODUCT
5. UNDERLAYMENTS SHOULD BE INSTALLED TO FORM WATER-SHEDDING LAPS

TYP. WINDOW FLASHING DETAIL

3/4" = 1'-0"

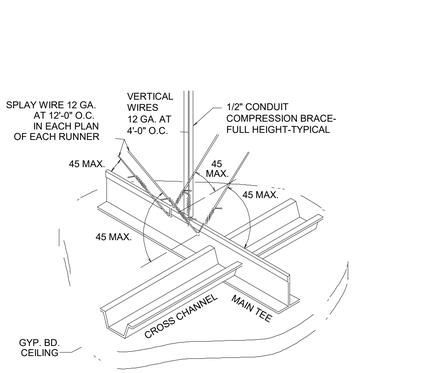

SUSPENDED GYP CEILING

1 1/2" = 1'-0"

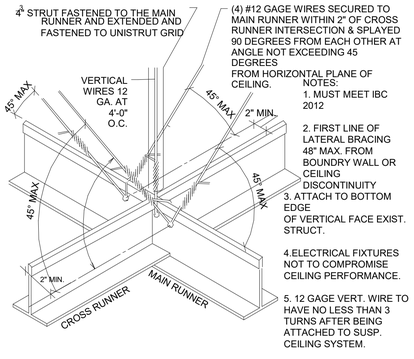

LAY-IN SUSPENDED CEILING

1 1/2" = 1'-0"

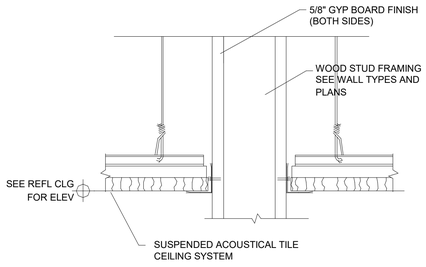

WALL /CEILING DETAIL

3" = 1'-0"

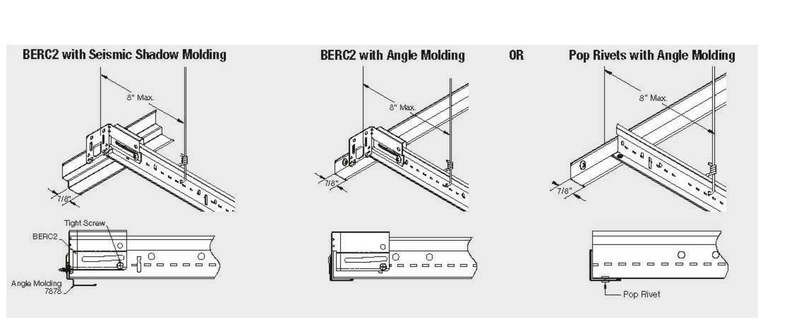

BERC CLIP DETAILS

3" = 1'-0"

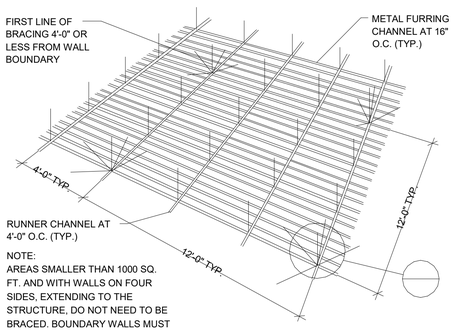

GYP. SUSPENSION SYSTEM

3/4" = 1'-0"

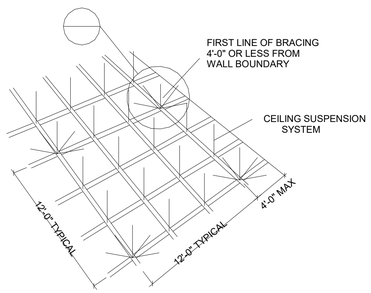

SEISMIC BRACING

3/4" = 1'-0"

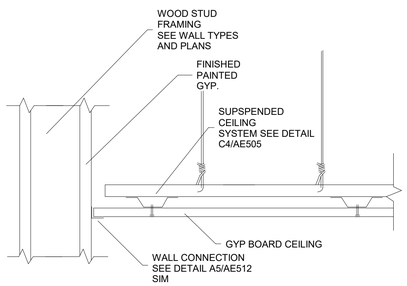

GYP. BOARD CEILING

3" = 1'-0"

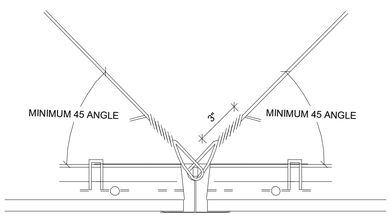

COUNTER LOOPINGS

3" = 1'-0"

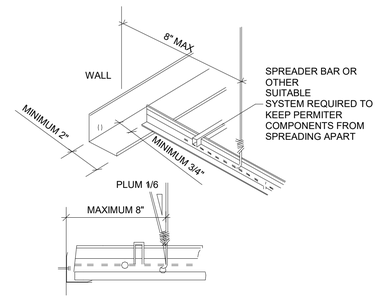

CEILING /WALL CONNECTION

3" = 1'-0"

DEKOLD ARCHITECTURE INC.
1975 Belmont Ave, Idaho Falls, ID. 83404
83402
(208) 206-7338
www.behance.net/kevindekold
kevindekold@hotmail.com

STATE OF UTAH
KEVIN DEKOLD
No. 7164959-0301
1/22/2025
LICENSED ARCHITECT

Civil
Cache Landmark
95 W Golf Course Rd St. 101
Logan, UT 84321
(435) 713-0099

Landscape
Cache Landmark
95 W Golf Course Rd St. 101
Logan, UT 84321
(435) 713-0099

Structural
Calder Richards Consulting Engineers
1805 South Redwood Road Ste 102
Salt Lake City, UT 84104
(801) 486-1899

Mechanical
Royal
1837 S E Bay Blvd
Provo, UT 84606
(801) 375-2228

Electrical
BNA Consulting
4225 W Lake Park Blvd St. 275
West Valley City, UT 84121
(435) 628-3670

AIS - WEST VALLEY

EXPANSION INDEPENDANT LIVING BUILDING

2574 S. REDWOOD RD.
WEST VALLEY CITY, UT 84119

REVISIONS:

1	03-19-25
2	00-00-00
3	00-00-00

SHEET NUMBER:

A-700

3/19/2025

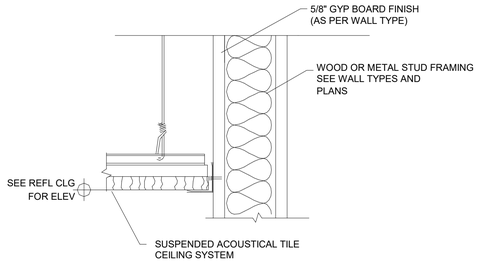

WALL /CEILING ATTACHMENT DETAIL
SCALE: NTS

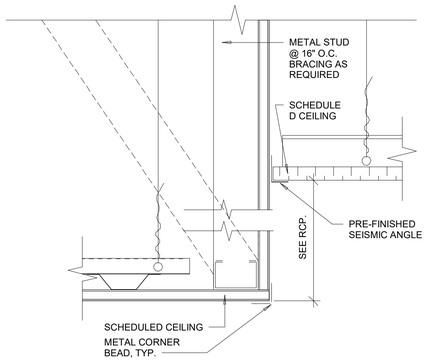

SOFFIT DETAIL
SCALE: NTS

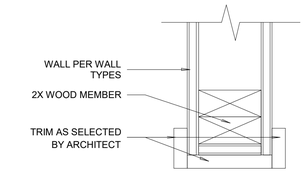

OPENING JAMB
SCALE: NTS

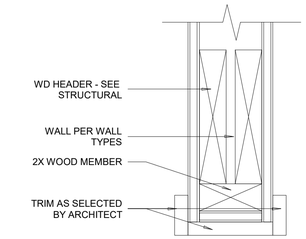

OPENING HEADER
SCALE: NTS

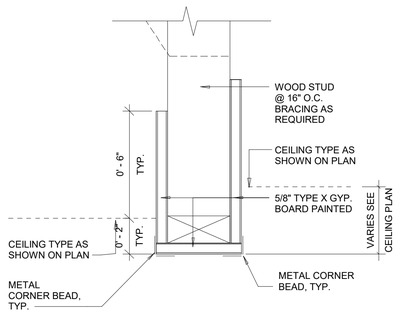

HEADER DETAIL
SCALE: NTS

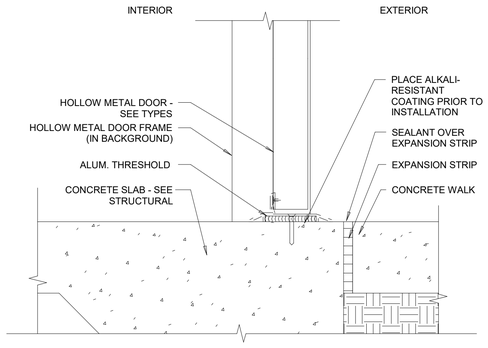

HM THRESHOLD @ EXT. DOOR
SCALE: NTS

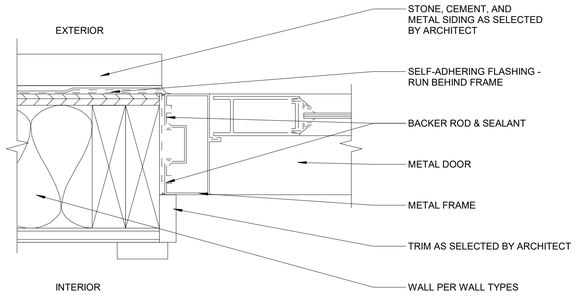

EXT - MET. DOOR JAMB
SCALE: NTS

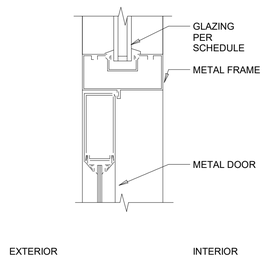

EXT - MET. DOOR HEAD
SCALE: NTS

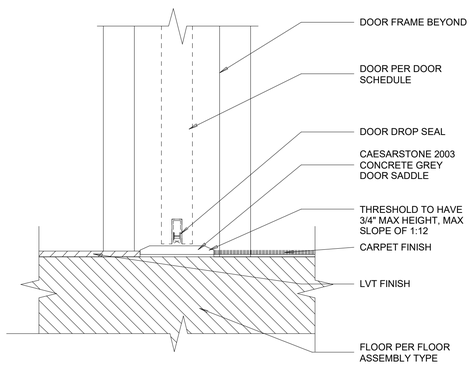

RESIDENTIAL ENTRY DOOR THRESHOLD
SCALE: NTS

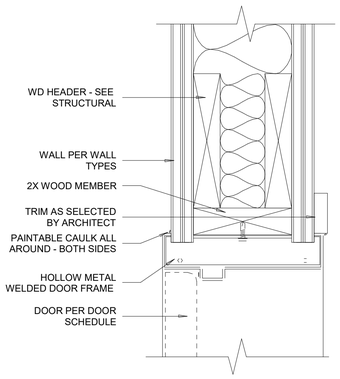

UNIT ENTRY DOOR HEAD
SCALE: NTS

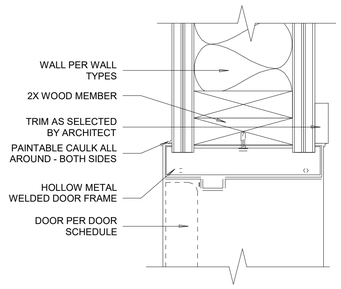

UNIT ENTRY DOOR JAMB
SCALE: NTS

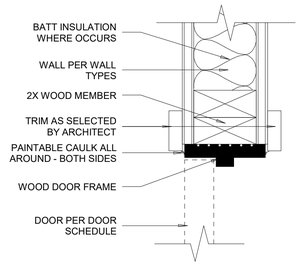

WD INT. DOOR JAMB
SCALE: NTS

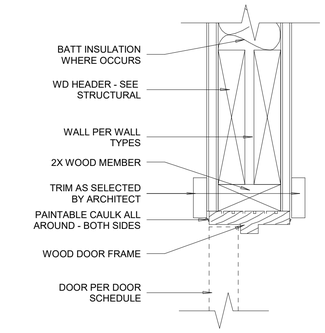

WD INT. DOOR HEAD
SCALE: NTS

DEKOLD ARCHITECTURE INC.
1975 Belmont Ave, Idaho Falls, ID, 83404
83402
(208)206-7338
www.behance.net/kevindekold
kevindekold@hotmail.com

STATE OF UTAH
KEVIN DEKOLD
No. 7164959-0301
LICENSED ARCHITECT
1/22/2025

Civil
Cache Landmark
95 W Golf Course Rd St. 101
Logan, UT 84321
(435) 713-0099

Landscape
Cache Landmark
95 W Golf Course Rd St. 101
Logan, UT 84321
(435) 713-0099

Structural
Calder Richards Consulting Engineers
1805 South Redwood Road Ste 102
Salt Lake City, UT 84104
(801) 486-1899

Mechanical
Royal
1837 S E Bay Blvd
Provo, UT 84606
(801) 375-2228

Electrical
BNA Consulting
4225 W Lake Park Blvd St. 275
West Valley City, UT 84121
(435) 628-3870

AIS - WEST VALLEY
EXPANSION INDEPENDANT LIVING BUILDING
2574 S. REDWOOD RD.
WEST VALLEY CITY, UT 84119

REVISIONS:
1 03-19-25
2 00-00-00
3 00-00-00

SHEET NUMBER:
A-701
3/19/2025

3/19/2025 4:21:25 PM

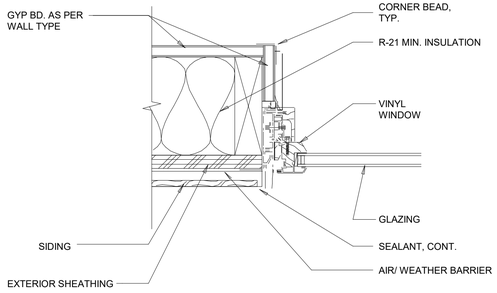

WINDOW JAMB
SCALE: NTS

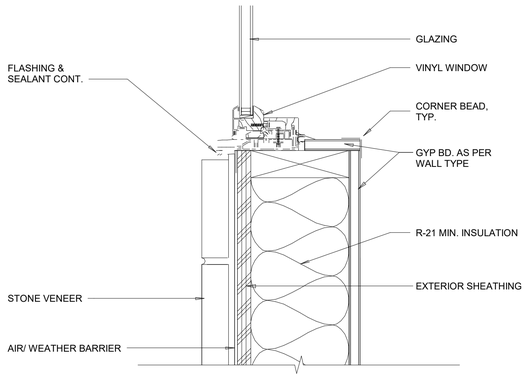

WINDOW SILL STONE
SCALE: NTS

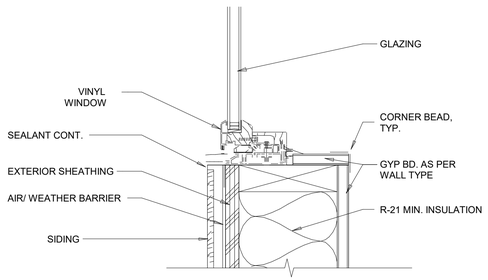

WINDOW SILL WOOD
SCALE: NTS

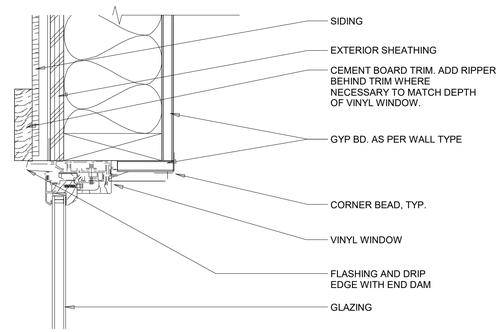

WINDOW HEAD
SCALE: NTS

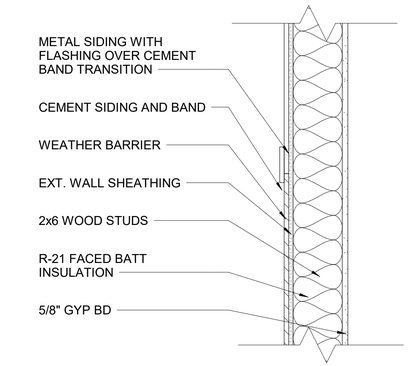

METAL TO CEMENT TRANSITION
SCALE: NTS

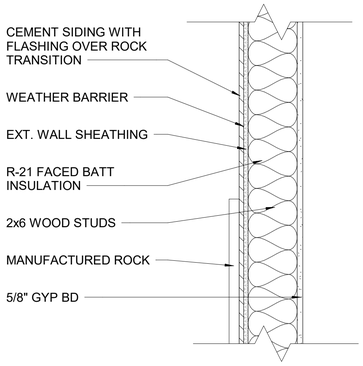

CEMENT TO ROCK TRANSITION
SCALE: NTS

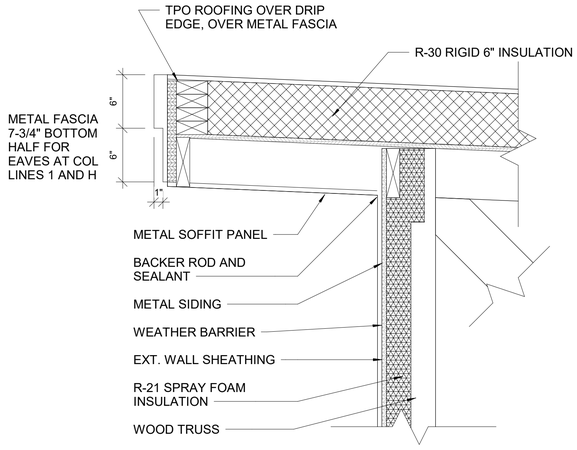

WALL TO EAVE
SCALE: NTS

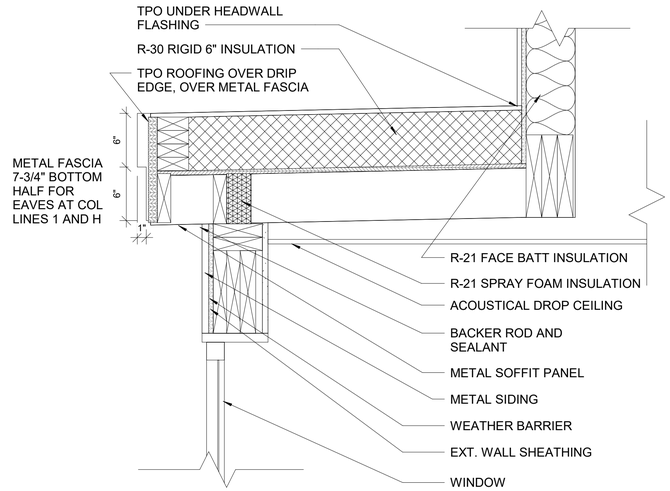

ROOF TO WALL
SCALE: NTS

DEKOLD ARCHITECTURE INC.
1975 Belmont Ave, Idaho Falls, ID. 83404
83402
(208) 206-7338
www.behance.net/kevindekold
kevindekold@hotmail.com

STATE OF UTAH
KEVIN DEKOLD
No. 7164959-0301
1/22/2025
LICENSED ARCHITECT

Civil	Cache Landmark	95 W Golf Course Rd St. 101 Logan, UT 84321	(435) 713-0099
Landscape	Cache Landmark	95 W Golf Course Rd St. 101 Logan, UT 84321	(435) 713-0099
Structural	Calder Richards Consulting Engineers	1805 South Redwood Road Ste 102 Salt Lake City, UT 84104	(801) 486-1899
Mechanical	Royal	1827 S E Bay Blvd Provo, UT 84606	(801) 375-2228
Electrical	BNA Consulting	4225 W Lake Park Blvd St. 275 West Valley City, UT 84121	(435) 628-3870

AIS - WEST VALLEY
EXPANSION INDEPENDANT LIVING BUILDING
2574 S. REDWOOD RD.
WEST VALLEY CITY, UT 84119

REVISIONS:
1 03-19-25
2 00-00-00
3 00-00-00

SHEET NUMBER:
A-702
3/19/2025

Legend:
Link to catalog cut sheet
Electrified Opening

HARDWARE GROUP NO. 01

For use on Door #(s):
107 109 110 202 203

Each to have:

3	EA	HINGE	5BB1 4.5 X 4.5		652	IVE
1	EA	STOREROOM LOCK	ND80P6D LAT		626	SCH
1	EA	ELECTRIC STRIKE	BY SECURITY CONTRACTOR		630	VON
1	EA	SURFACE CLOSER	SC81A FC		689	FAL
1	EA	KICK PLATE	8400 10" X 2" LDW B-CS		630	IVE
1	EA	WALL STOP	WS406/407CCV		630	IVE
1	EA	GASKETING	488SBK PSA		BK	ZER
1	EA	WIRE HARNESS	CON-XX AS REQUIRED			SCH
1	EA	CARD READER	BY SECURITY CONTRACTOR		BLK	SCE
1	EA	POWER / LOW VOTAGE POWER	BY SECURITY CONTRACTOR			VON

DOOR IS NORMALLY LOCKED. RESTRICTING ENTRY.
AUTHORIZED CREDENTIAL AT OUTSIDE CARD READER MOMENTARILY RELEASES ELECTRIC STRIKE TO ALLOW ENTRY OR BY KEY.
INSIDE LEVER ALWAYS ALLOWS EGRESS.

HARDWARE GROUP NO. 02

For use on Door #(s):
111 204

Each to have:

3	EA	HINGE	5BB1 4.5 X 4.5		652	IVE
1	EA	FIRE EXIT HARDWARE	98-L-BE-F-LAT		626	VON
1	EA	SURFACE CLOSER	SC71A HDPA		689	FAL
1	EA	KICK PLATE	8400 10" X 2" LDW B-CS		630	IVE
1	EA	WALL STOP	WS406/407CCV		630	IVE
1	EA	GASKETING	488SBK PSA		BK	ZER

HARDWARE GROUP NO. 03

For use on Door #(s):
108

Each to have:

3	EA	HINGE	5BB1 4.5 X 4.5		652	IVE
1	EA	CORRIDOR LOCK W/ OUTSIDE INDICATOR	L9456P6 LATA L583-363 OS-OCC		626	SCH
1	EA	ELECTRIC STRIKE WITH DEADBOLT CAPTURE	BY SECURITY CONTRACTOR		630	VON
1	EA	SURFACE CLOSER	SC81A FC		689	FAL
1	EA	KICK PLATE	8400 10" X 2" LDW B-CS		630	IVE
1	EA	WALL STOP	WS406/407CCV		630	IVE
1	EA	GASKETING	488SBK PSA		BK	ZER
1	EA	WIRE HARNESS	CON-XX AS REQUIRED			SCH
1	EA	CARD READER	BY SECURITY CONTRACTOR		BLK	SCE
1	EA	POWER / LOW VOTAGE POWER	BY SECURITY CONTRACTOR			VON

DOOR IS NORMALLY LOCKED. RESTRICTING ENTRY.
AUTHORIZED CREDENTIAL AT OUTSIDE CARD READER MOMENTARILY RELEASES ELECTRIC STRIKE TO ALLOW ENTRY OR BY KEY.
WHEN DEADBOLT IS THROWN IT DISABLES THE CARD READER.
INSIDE LEVER ALWAYS ALLOWS EGRESS.

HARDWARE GROUP NO. 04

For use on Door #(s):
103 104 105

Each to have:

6	EA	HINGE	5BB1HW 4.5 X 4.5 NRP		630	IVE
2	EA	POWER TRANSFER	EPT10 CON		689	VON
1	EA	ELEC FIRE EXIT HARDWARE	RX-98-EO-F-CON		626	VON
1	EA	ELECTRIC STRIKE	BY SECURITY CONTRACTOR		630	VON
2	EA	SURFACE CLOSER	SC71A HDPA		689	FAL
2	EA	KICK PLATE	8400 10" X 2" LDW B-CS		630	IVE
2	EA	FLOOR STOP	FS18S		BLK	IVE
1	EA	RAIN DRIP	142AA		AA	ZER
1	SET	GASKETING	429AA-S		AA	ZER
2	EA	DOOR SWEEP	39A		A	ZER
1	EA	THRESHOLD	VERIFY SILL CONDITION		A	ZER
1	EA	CARD READER	BY SECURITY CONTRACTOR		BLK	SCE
2	EA	DOOR CONTACT	7764 / 679-05 AS REQUIRED		628	SCE
1	EA	POWER / LOW VOTAGE POWER	BY SECURITY CONTRACTOR			VON

HARDWARE GROUP NO. 05

For use on Door #(s):
201

Each to have:

3	EA	HINGE	5BB1 4.5 X 4.5 NRP		652	IVE
1	EA	STOREROOM LOCK	ND80P6D LAT		626	SCH
1	EA	ELECTRIC STRIKE	BY SECURITY CONTRACTOR		630	VON
1	EA	SURFACE CLOSER	SC81A SS FC		689	FAL
1	EA	KICK PLATE	8400 10" X 2" LDW B-CS		630	IVE
1	EA	WALL STOP	WS406/407CCV		630	IVE
1	EA	GASKETING	488SBK PSA		BK	ZER
1	EA	WIRE HARNESS	CON-XX AS REQUIRED			SCH
1	EA	CARD READER	BY SECURITY CONTRACTOR		BLK	SCE
1	EA	POWER / LOW VOTAGE POWER	BY SECURITY CONTRACTOR			VON

DOOR IS NORMALLY LOCKED. RESTRICTING ENTRY.
AUTHORIZED CREDENTIAL AT OUTSIDE CARD READER MOMENTARILY RELEASES ELECTRIC STRIKE TO ALLOW ENTRY OR BY KEY.
INSIDE LEVER ALWAYS ALLOWS EGRESS.

HARDWARE GROUP NO. 06

For use on Door #(s):
106

Each to have:

4	EA	HINGE	5BB1HW 4.5 X 4.5 NRP		630	IVE
1	EA	STOREROOM LOCK	ND80P6D LAT		626	SCH
1	EA	ELECTRIC STRIKE	BY SECURITY CONTRACTOR		630	VON
1	EA	LOCK GUARD	LG14		630	IVE
1	EA	SURFACE CLOSER	SC71A SS		689	FAL
1	EA	KICK PLATE	8400 10" X 2" LDW B-CS		630	IVE
1	EA	RAIN DRIP	142AA		AA	ZER
1	SET	GASKETING	429AA-S		AA	ZER
1	EA	DOOR SWEEP	39A		A	ZER
1	EA	THRESHOLD	VERIFY SILL CONDITION		A	ZER
1	EA	WIRE HARNESS	CON-XX AS REQUIRED			SCH
1	EA	CARD READER	BY SECURITY CONTRACTOR		BLK	SCE
1	EA	DOOR CONTACT	7764 / 679-05 AS REQUIRED		628	SCE
1	EA	POWER / LOW VOTAGE POWER	BY SECURITY CONTRACTOR			VON

DOOR IS NORMALLY LOCKED. RESTRICTING ENTRY.
AUTHORIZED CREDENTIAL AT OUTSIDE CARD READER MOMENTARILY RELEASES ELECTRIC STRIKE TO ALLOW ENTRY OR BY KEY.
INSIDE LEVER ALWAYS ALLOWS EGRESS.

HARDWARE GROUP NO. 07

For use on Door #(s):
112D 112E 113D 113E 114D 114E
115D 115E 116D 116E 117D 117E
205D 205E 206D 206E 207D 207E
208D 208E 209D 209E 210D 210E

Each to have:

3	EA	HINGE	1011 3.5 X 3.5		652	IVE
1	EA	PRIVACY LOCK	W301S LAT		626	FAL
1	EA	DOOR STOP	74 / 75 AS REQUIRED		F26	IVE
3	EA	SILENCER	SR64		GRY	IVE

HARDWARE GROUP NO. 08

For use on Door #(s):
112B 113B 114B 115B 116B 117B
205B 206B 207B 208B 209B 210B

Each to have:

3	EA	HINGE	1011 3.5 X 3.5		652	IVE
1	EA	ROLLER LATCH	RL32		626	IVE
1	EA	SINGLE DUMMY TRIM	W12 LAT		626	FAL
1	EA	DOOR STOP	74 / 75 AS REQUIRED		F26	IVE
3	EA	SILENCER	SR64		GRY	IVE

HARDWARE GROUP NO. 09

For use on Door #(s):
112C 113C 114C 115C 116C 117C
205C 206C 207C 208C 209C 210C

Each to have:

3	EA	HINGE	1011 3.5 X 3.5		652	IVE
1	EA	SINGLE DUMMY TRIM	W12 LAT		626	FAL
1	EA	SGL CYL X TURN DB	D141P6		626	FAL
1	EA	DOOR STOP	74 / 75 AS REQUIRED		F26	IVE
3	EA	SILENCER	SR64		GRY	IVE

HARDWARE GROUP NO. 10

For use on Door #(s):
112A 113A 114A 115A 116A 117A
205A 206A 207A 208A 209A 210A

Each to have:

3	EA	HINGE	5BB1 4.5 X 4.5		652	IVE
1	EA	STOREROOM LOCK	ND80P6D LAT		626	SCH
1	EA	ELECTRIC STRIKE	BY SECURITY CONTRACTOR		630	VON
1	EA	OH STOP	450S		689	GLY
1	EA	SURFACE CLOSER	SC81A FC		689	FAL
1	EA	KICK PLATE	8400 10" X 2" LDW B-CS		630	IVE
1	EA	GASKETING	488SBK PSA		BK	ZER
1	EA	DOOR SWEEP	111AA		AA	ZER
1	EA	THRESHOLD	VERIFY SILL CONDITION		A	ZER
1	EA	VIEWER	U698		626	IVE
1	EA	CARD READER	BY SECURITY CONTRACTOR		BLK	SCE
1	EA	POWER / LOW VOTAGE POWER	BY SECURITY CONTRACTOR			VON

DOOR IS NORMALLY LOCKED. RESTRICTING ENTRY.
AUTHORIZED CREDENTIAL AT OUTSIDE CARD READER MOMENTARILY RELEASES ELECTRIC STRIKE TO ALLOW ENTRY OR BY KEY.
INSIDE LEVER ALWAYS ALLOWS EGRESS.

HARDWARE GROUP NO. 11

For use on Door #(s):
112F 113F 114F 115F 116F 117F
205F 206F 207F 208F 209F 210F

Each to have:

6	EA	HINGE	1011 3.5 X 3.5		652	IVE
2	EA	ROLLER LATCH	RL32		626	IVE
2	EA	SINGLE DUMMY TRIM	W12 LAT		626	FAL
2	EA	DOOR STOP	74 / 75 AS REQUIRED		F26	IVE
2	EA	SILENCER	SR64		GRY	IVE

HARDWARE GROUP NO. 12

For use on Door #(s):
101 102

Each to have:

8	EA	HINGE	5BB1HW 4.5 X 4.5 NRP		630	IVE
2	EA	POWER TRANSFER	EPT10 CON		689	VON
1	EA	ELEC PANIC HARDWARE	RX-QEL-9849-EO-CON 24 VDC		626	VON
1	EA	ELEC PANIC HARDWARE	RX-QEL-9849-NL-CON 24 VDC		626	VON
1	EA	SURF. AUTO OPERATOR	9553 REG2 LESS TRACK AS REQ (120/240 VAC)		ANCLR	LCN
1	EA	ACTUATOR PKG	8310-3857T		630	LCN
1	EA	WEATHER RING	8310-801			LCN
1	EA	MOUNTING PLATE	9550-18 (LENGTH AS REQUIRED)		ANCLR	LCN
2	EA	KICK PLATE	8400 10" X 2" LDW B-CS		630	IVE
2	EA	FLOOR STOP	FS18S		BLK	IVE
1	EA	RAIN DRIP	142AA		AA	ZER
1	SET	GASKETING	429AA-S		AA	ZER
2	EA	DOOR SWEEP	39A		A	ZER
1	EA	THRESHOLD	VERIFY SILL CONDITION		A	ZER
4	EA	WIRE HARNESS	CON-XX AS REQUIRED			SCH
1	EA	CARD READER	BY SECURITY CONTRACTOR		BLK	SCE
2	EA	DOOR CONTACT	7764 / 679-05 AS REQUIRED		628	SCE
1	EA	POWER SUPPLY	PS904 BBK 900-4RL KL900 120/240 VAC		LGR	SCE

DOOR IS NORMALLY LOCKED. RESTRICTING ENTRY.
AUTHORIZED CREDENTIAL AT OUTSIDE CARD READER MOMENTARILY RETRACTS LATCH TO ALLOW ENTRY OR BY KEY.
AUTHORIZED CREDENTIAL AT OUTSIDE CARD READER TO ALLOW ADA PUSH BUTTON TO ACTIVATE AUTO OPERATOR AND OPEN DOOR INSIDE ADA PUSH BUTTON ALWAYS ACTIVE.
SHOULD OWNER DESIRE ACCESS CONTROL SYSTEM MAY HAVE LATCH RETRACTED DURING OPEN HOURS TO ALLOW FREE PUBLIC ENTRY.
INSIDE TOUCHBAR ALWAYS ALLOWS EGRESS.

END OF SECTION

DEKOLD ARCHITECTURE INC.
1975 Belmont Ave, Idaho Falls, ID, 83404
83402
(208) 206-7338
www.behance.net/kevindekold
kevindekold@hotmail.com

STATE OF UTAH
KEVIN DEKOLD
No. 7164959-0301
1/22/2025
LICENSED ARCHITECT

Civil
Landscape
Structural
Calder Richards Consulting Engineers
1805 South Redwood Road Ste 102
Salt Lake City, UT 84104
(801) 486-1899
Mechanical
Royal
1837 S E Bay Blvd
Provo, UT 84606
(801) 375-2228
Electrical
BNA Consulting
4225 W Lake Park Blvd St. 275
West Valley City, UT 84121
(435) 628-3870

AIS - WEST VALLEY
EXPANSION INDEPENDANT LIVING BUILDING
2574 S. REDWOOD RD.
WEST VALLEY CITY, UT 84119

REVISIONS:
1 03-19-25
2 00-00-00
3 00-00-00

SHEET NUMBER:
A-900
3/19/2025

STRUCTURAL DESIGN CRITERIA

Risk Category:	II
Floor(s):	
Dead Load:	DL = 28 PSF
Live Load(s):	
Corridors	LL = 100 PSF
Private Rooms	LL = 40 PSF
Roof:	
Dead Load:	DL = 20 PSF
Ground Snow Load:	Pg = 28 PSF
Flat Roof Snow Load:	Pf = 20 PSF
Snow Exposure Factor:	Ce = 1.0
Snow Importance Factor:	I = 1.0
Thermal Factor:	Ct = 1.0
Rain Intensity:	i = 1.64 In/hr (9 PSF)
Wind:	
Basic Wind Speed:	V = 115 MPH (3 Sec Gust)
Importance Factor:	I = 1.0
Wind Exposure:	"C"
Internal Pressure Coeff:	GCpi = 0.18(±)
Component and Cladding Pressure:	P = See Table Below

COMPONENTS & CLADDING WIND PRESSURE (PSF) ULTIMATE DESIGN LOADS

	Typical Conditions		Corner Conditions	
Tributary Area	Positive Pressure	Negative Pressure	Positive Pressure	Negative Pressure
10 SF	+21 PSF	-22 PSF	+21 PSF	-27 PSF
50 SF	+19 PSF	-20 PSF	+19 PSF	-23 PSF
100 SF	+18 PSF	-19 PSF	+18 PSF	-22 PSF
500 SF	+16 PSF	-17 PSF	+16 PSF	-17 PSF

Seismic:

Procedure:	Equivalent Lateral Force
Site Class:	D
Importance Factor:	I = 1.0
Seismic Design Category:	D
Spectral Response Accelerations:	Ss = 1.52 S1 = 0.54
Spectral Response Coeff:	SDS = 1.22 SD1 = 0.63

Basic Seismic-Force-Resisting System:
Light Frame Walls With Wood Shear Panels
R=6.5, Omega=3, Cd=4, Cs=0.188
Seismic Base Shear = 69.8 KIPS (LRFD)

Soils:
Net Allowable Soil Pressure = 1500 PSF, per Soils Report by AGEC, Project Number 1240801, Dated November 25, 2024.

GENERAL
1. All details, sections, and notes shown on the drawings are intended to be typical and shall apply to similar situations elsewhere unless noted or shown otherwise. Notes and details on drawings shall take precedence over these General Notes. General Notes shall take precedence over the Specifications.
2. Refer to the Specifications for information not covered by these General Notes or the Structural Drawings.
3. See the Architectural Drawings for dimensions, doors, windows, non-bearing interior and exterior walls, elevations, slopes, stairs, curbs, drains, recesses, depressions, railings, waterproofing, finishes, chamfers, kerfs, etc.
4. All design, construction, and inspection shall be in conformance with the 2021 International Building Code (IBC) including all referenced standards therein.
5. The Contractor shall verify all dimensions and conditions at the site.
6. All omissions or conflicts between the various elements of the working drawings and/or Specifications shall be brought to the attention of the Architect and/or Structural Engineer before proceeding with any work involved.
7. The Structural Drawings shall be used in conjunction with the entire set of Construction Drawings. This means that detailing and shop drawing production for structural elements will require information that is contained on the Architectural and/or other consultants' drawings. The Structural Drawings may not show all dimensions, slopes, elevations, depressions, mechanical housekeeping pads, etc. The Contractor shall verify all dimensions that are shown on the Structural Drawings with the Architectural and/or other consultants' drawings. Any discrepancies shall be brought to the attention of the Architect and/or Structural Engineer before proceeding with any work involved.
8. Drawings indicate the finished product. They do not indicate a method of construction. Contractor shall take all precautions necessary to protect the structure during construction. Such precautions shall include, but not be limited to, bracing, shoring for construction equipment, etc.
9. The Contractor shall be responsible for compensating the Owner for any changes made as a result of a deviation from the Contract Documents, deviation from the Specifications, faulty materials, or faulty workmanship.
10. Options are for the Contractor's convenience. The Contractor shall be responsible for coordinating all required design changes. Cost associated with any design work initiated by the option shall be borne by the Contractor.
11. Contractor shall be responsible for safety and protection within and adjacent to the job site.
12. Temporary shoring and bracing shall be provided wherever necessary to support all loads to which the structure may be subjected including wind and soil loads. Such bracing shall be left in place as long as may be required for safety or until all structural elements are complete.
13. During and after construction the Contractor and/or Owner shall keep loads on the structure within the limits of the design loads.
14. Observation visits to the job site by field representatives of Calder Richards Consulting Engineers shall neither be construed as inspection nor approval of construction.
15. Sizes, locations, and anchorages of equipment shall be verified in the field with equipment manufacturers (suppliers) prior to placing concrete or fabricating steel.
16. Thermal or moisture protection, furnishings, doors, windows, equipment, mechanical, electrical, finishes, siding, paneling, and veneers are not part of the responsibility of the Structural Engineer.

QUALITY ASSURANCE PLAN
1. Special Inspection shall be provided by the Owner according to IBC Chapter 17 for the items identified in this section and on the Contract Documents. See Structural Special Inspection Schedule below for additional information on Steel, Concrete, Masonry, and Soils Special Inspection requirements.
2. The names and credentials of Special Inspectors to be used shall be submitted to the Building Department when applying for a Building Permit.
3. Special Inspection Reports shall be delivered to the Engineer of Record, Architect, and Owner (as requested) bi-weekly or more frequently as required by the Inspector or Building Official.
4. Off-Site Fabrication: Where fabrication of structural load-bearing members and assemblies are being performed on the premises of a fabricator's shop, special inspection of the fabricated items shall be in accordance with IBC Section 1704.2.5 unless the fabricator is approved according to IBC Section 1704.2.5.1.
5. Steel Construction: Special Inspections for steel elements shall be provided in accordance with Section 1705.2, Chapter N of AISC 360 (Current Version), and Chapter J of AISC 341 (Current Version).
6. Welding: Welding Inspection shall be provided in accordance with Sections N5.4 and N5.5 of AISC 360 (Current Version). Elements that are part of the Seismic-Force-Resisting System shall also be inspected according to Section J6 of AISC 341 (Current Version).
7. High-Strength Bolts: Special Inspection shall be provided for installation of high-strength bolts in accordance with Section N5.6 of AISC 360 (Current Version). Elements that are part of the seismic-force-resisting-system shall also be inspected according to Section J7 of AISC 341 (Current Version).
8. Concrete Construction: Special Inspections and verifications shall be provided in accordance with Section 1705.3 and Table 1705.3 of the IBC.
9. Wood: Wood elements of the Seismic-Force-Resisting System in accordance with Sections 1705.5 and 1705.13.2.
10. Soils: Special Inspection shall be provided for placement of fill in accordance with Section 1705.6 and Table 1705.6.
11. Wall Panels and Veneers: Special Inspection shall be provided for exterior and interior architectural wall panels and the anchoring of veneers in accordance with Section 1705.13.5.
12. Epoxy Anchors: Special Inspections and Verifications shall be provided in accordance with Section 1705.3 and Table 1705.3 of the IBC. At a minimum, prior to and during epoxy injection to ensure proper installation as per manufacturer's requirements. Contractor shall submit proposed Epoxy Manufacturer's ICC-ES Report to Structural Engineer prior to installation.
13. No Special Inspection of concrete footings and foundations is required since the design meets exception criteria of IBC Section 1705.3.
14. No Special Inspection of concrete reinforcing steel is required since the concrete itself requires no Special Inspection. See IBC Section 1705.3.

QUALITY ASSURANCE - CONTRACTOR RESPONSIBILITY
Each Contractor responsible for the construction of a Wind or Seismic-Force-Resisting System, Designated Seismic System, or Wind or Seismic Resisting Component listed in the quality assurance plan shall submit a written Contractor's Statement of Responsibility to the Building Official and to the Owner prior to the commencement of work on the system or component. The Contractor's Statement of Responsibility shall contain the following:
1. Acknowledgment of awareness of the special requirements contained in the Quality Assurance Plan.
2. Acknowledgment that control will be exercised to obtain conformance with the Construction Documents approved by the Building Official.
3. Procedures for exercising control within the Contractor's organization, the method and frequency of reporting, and the distribution of reports.
4. Identification and qualifications of the person(s) exercising such control and the position(s) in the organization.

STRUCTURAL DEFERRED SUBMITTALS
Contractor shall submit Drawings and Calculations for the following items bearing the seal of a Professional Engineer Licensed in the State of the project to Architect/Engineer before submitting to jurisdiction for review and permitting.

Items:
1. Design-Build Stairs and Railings
2. Prefabricated Metal-Plated Wood Trusses

SHOP DRAWING SUBMITTALS
1. Contractor shall review and verify all Shop Drawings to ensure they comply with the requirements of the Contract Documents. Engineer will review the Shop Drawings for general conformance with the design concept. This review by the Engineer shall not be construed as approval. The Contractor shall verify all shop drawing dimensions with Structural and Architectural plans and details.
2. Provide Shop Drawings to the Engineer for review for the following, but not limited to:
   A. Concrete Foundation Reinforcement
   B. Wall Reinforcement
   C. Concrete Mix Design
   D. Structural Steel
   E. Wood Joists
   F. Wood Trusses
   G. Design-Build Stairs and Railings
3. Refer to the Architectural Drawings for Shop Drawing submittals required for non-structural elements.

STRUCTURAL OBSERVATION
Calder Richards Consulting Engineers shall be notified by the Contractor 5 business days before the completion of the items listed in this section so that Structural Observation may be scheduled and performed in accordance with IBC Section 1704.6. The observations will be performed at the discretion of Calder Richards Consulting Engineers.

1. After forms, reinforcement, anchor bolts, and embeds in place for footings (before pouring).
2. After forms, reinforcement, anchor bolts, and embeds in place for foundation walls (before pouring).
3. After wood framing and floor/roof sheathing in place (before covering).

SITE PREPARATION NOTES
1. Site Preparation Notes for this project should follow the recommendations contained in a Soils Report referenced in the Structural Design Criteria Section, along with any addenda thereto, which have been prepared for this project. A reference copy is available upon request from the Architect. Footings and foundations as shown on drawings may vary if the subsurface soil conditions vary from those found in the Soils Report. Unless noted otherwise, follow all recommendations in the Soils Report.

FOOTINGS
1. All footings shall bear on original undisturbed earth or on engineered fill down to undisturbed earth compacted to 95% of maximum relative density based on ASTM D1557. Such fill shall be placed in layers not to exceed 6" in depth after compaction and shall extend down to in-situ granular soils. Unless noted otherwise, follow all recommendations in the soils report.
2. Footing elevations shown on plan are top of footings and are minimum depth. Different or unusual conditions shall be reported to the Architect and/or Engineer before proceeding.
3. Exterior wall footings shall bear at a minimum depth of 2'-6" below finished exterior grade to achieve frost depth requirements.
4. NO footings shall be placed in water or on frozen ground.
5. Any soil condition encountered during excavation that is contrary to the conditions used for design of footings as outlined in the referenced Soils Report or on the drawings shall be brought to the attention of the Architect before proceeding.
6. DO NOT back fill behind foundation walls until top and bottom decks have been completed and attained their design strengths.
7. Back fill both sides of foundation walls at same time to prevent overturning.
8. Wall footings, where not shown otherwise, shall be 12" thick with an 8" spread each side of wall and provided with (1) #5 x continuous at bottom for each 8" of footing width.
9. Where a pipe passes through an interior or exterior foundation wall, step the footing down to pass below pipe and then step back up to indicated elevation. Provide pipe sleeve through foundation wall.
10. All footing excavations shall be examined by a Geotechnical Engineer for verification of adequate bearing conditions before placing concrete.

REINFORCING STEEL
1. All reinforcement shall be detailed and placed in accordance with ACI Detailing Manual 315R (Current Version) and ACI Standard 318 (Current Version).
2. Reinforcing steel shall be ASTM A615 Grade 60.
3. Welded wire fabric shall conform to ASTM A185. Lap one mesh tie.
4. All reinforcement shall be securely tied and held in place.
5. Provide accessories recommended by the CRSI necessary to properly support reinforcing at positions shown on plans.
6. Reinforcing bars that are to be welded, including Deformed Bar Anchors (DBA) shall comply with ASTM A706 or another weldable grade and shall be welded in accordance with the AWS recommendations.
7. All continuous reinforcement shall terminate with a 90 degree turn or a separate corner bar. All splices shall have a minimum lap or embedment per Reinforcing Schedule.
8. Where the length of a bar is given and it is to be hooked, the hook shall be in addition to the length given, unless shown otherwise.
9. Cover to main reinforcement from adjacent surfaces shall be as follows unless shown otherwise:
   A. Cast against and permanently in contact with ground ..... 3"
   B. Exposed to weather or in contact with ground (#6 and larger) .....2"
   C. Exposed to weather or in contact with ground (#5 and smaller) ..... 1-1/2"
   D. Not exposed to weather or in contact with ground (slabs, joists, and walls #11 and smaller) ..... 3/4"
   E. Not exposed to weather or in contact with ground (beams, columns, pedestals and tension ties)..... 1-1/2"
   F. In all cases minimum cover shall not be less than the diameter of adjacent bars.
10. Prior to fabrication and placement, Shop Drawings for all reinforcing steel shall be reviewed by the Structural Engineer.

CONCRETE
1. Concrete shall attain the following minimum compressive strengths at 28 days:
   Footings .....3500 PSI
   Foundation Walls .....3500 PSI
   Interior Slabs on Grade .....4000 PSI
   Exterior Flatwork.....5000 PSI
2. The various concrete items are assigned to the following Exposure Categories and Classes per Section 19.3 of ACI 318 (Current Version):
   Footings F1, S0, W0, C1
   Foundation Walls F1, S0, W0, C1
   Interior Slabs on Grade F0, S0, W0, C1
   Exterior Flatwork.....F3, S0, W0, C2

   See Table 19.3.1.1 of ACI 318 (Current Version) for explanations of Categories and Classes listed above.
3. A Statement of Mix Design for all concrete shall be submitted to and reviewed by the Structural Engineer prior to commencing work. All mix designs shall incorporate requirements and restrictions found in Section 19.3 & Tables 19.3.1.1, 19.3.2.1, and 19.3.3.1 of ACI 318 (Current Version). If two or more requirements are in conflict, the more restrictive requirement shall be followed.
4. All concrete work shall be placed, cured, stripped, and protected as directed by the specifications and ACI Standards and Practices.
5. Unless noted otherwise on the drawings, reinforce concrete walls as follows:

Width	Horiz Reinf	Vert Reinf
8"	#4@ 12" OC	#4 @ 16" OC

6. Dowel vertical bars 36 diameters into structure above and footings below. Provide 90° hooks where 36 diameters is not possible. In addition, provide (2) #5 continuous bars top and bottom of 8" walls.
7. Before concrete is poured, check with all trades to ensure proper placement of all openings, sleeves, curbs, conduits, bolts, inserts, etc, relative to work. NO aluminum conduit nor product containing aluminum nor any other material injurious to concrete shall be embedded in concrete.
8. Continuous top and bottom bars in walls over openings shall be spliced as follows:
   A. Top bars - At mid-span
   B. Bottom bars - Over support
9. Where openings larger than 16" in any direction occur in walls or slabs, provide same size additional, full length reinforcing at each side of opening equal to 1/2 the number of bars interrupted by the opening. Space additional bars at 4 x bar diameter.
10. Construction Joints and Control Joints:
    A. Refer to drawings for typical construction joint details.
    B. Provide a continuous tool-roughened surface at top of all walls and footings, unless noted otherwise.
    C. All horizontal and vertical construction joints shall have a continuous 2"x4" keyway along the joint, unless noted otherwise, see details.
    D. Provide reinforcing dowels to match the member reinforcing at the joint, unless noted otherwise.
    E. Slabs and beams shall not have joints in horizontal plane.
    F. Construction joints for slabs on steel deck shall not exceed a distance of 80'-0" in any direction.
    G. Control joints shall be complete within 12 hours of concrete placement.
11. All slabs on grade shall be placed in alternate panels with a maximum width of 90 times the slab thickness in any direction. Construction joints shall not exceed 125'-0" OC in any direction; refer to typical details on drawings. Unless otherwise noted, slabs on grade shall be 4" thick and shall be reinforced with 6x6-W1.4xW1.4 welded wire fabric, centered in slab.
12. Provide a #3 nosing bar in all stair treads.
13. Forms, screeds, and beams supporting suspended concrete shall be cambered 1/4 inch per 10 feet of span to compensate for Dead Load deflections.
14. Where exterior slabs on grade abut walls or columns, provide 3/8" pre-formed expansion joint with sealant.
15. Admixtures:
    A. Air-entraining admixtures (when used), shall comply with ASTM C260.
    B. Calcium chloride shall not be added to concrete mix.

STRUCTURAL STEEL
1. All structural steel and structural steel work shall comply with the AISC "Steel Construction Manual" (Current Version) containing the specifications for the design, fabrication and erection of structural steel buildings, including the "Code of Standard Practices".
2. All wide flange structural steel shall be ASTM A992 and all miscellaneous shapes shall be ASTM A36, unless noted otherwise.
3. Structural steel tubing shall conform to ASTM A500 Grade C; Yield Stress = 50 KSI.
4. Structural steel pipe columns shall conform to ASTM A53, Grade B; Yield Stress = 35 KSI.
5. Use A325 Bolts for steel-to-steel connections, F1554 GR36 for Anchor Bolts, and A307 Bolts for all other connections (unless specified otherwise on drawings). Use 3/4" diameter minimum.
6. All welds shall be made with E70XX electrodes and by welders certified by AWS Standards within the past 12 months; provide written certification if requested. All welds shall have a minimum Charpy V-Notch toughness of 20 foot-pound at 0° F, unless noted otherwise on the plans.
7. All high-strength bolts shall be tightened to the appropriate minimum bolt tension in accordance with AISC "Specifications for Structural Joints using ASTM A325 or A490 Bolts." The preferred method of tightening is by use of "Twist off type tension control bolt assemblies." "Direct Tension Indicator" and the Turn-of-Nut method may also be used.
8. Connections indicated as slip critical shall comply with AISC "Specification for Structural Joints using ASTM A325 or A490 Bolts." Bolts in a slip critical connection shall be pre-tensioned to at least the minimum tension in this specification. Contact surface of bolted parts shall be a minimum of Class A.
9. All moment connections (shown on plans by a solid triangle at the end of the beam) shall conform to the IBC Requirements for Special Moment Resisting Space Frames (SMRSF).
10. All beam connections, not shown to be moment connections and not detailed otherwise shall be made using AISC Steel Construction Manual "Single Plate Connections" Table with the maximum number of rows shown for that beam.

PRE-ENGINEERED STEEL STAIRS
1. All steel stairs are Design-Build unless specifically designed and detailed on the Structural Drawings. The notes below apply to pre-engineered steel stairs only.
2. Design stairs, including framing members, connections (including those to building structure), treads, handrails, and landings, and provide for lateral restraint complying with the Contract Documents and Governing Code. The building lateral resisting system may be utilized for stair lateral restraint provided load paths to the building lateral resisting system are indicated in the calculations and connections shown on the shop drawings.
3. At connections to the structure, provide stabilizing elements such as braces and stiffener plates. Do not impose eccentric loading, twisting, or warping to the structural members. Provide material and install stabilizing elements at no additional cost to the owner.
4. Submit shop drawings and structural calculations stamped and signed by a Professional Engineer registered in the State where the project is constructed for review by the project Architect, Engineer and Building Official.

PLYWOOD DIAPHRAGM
Unless noted otherwise on the drawings sheath and nail all diaphragms as follows:

Wall Sheathing (Shear Walls):
Type: 1/2" APA Rated Exposure 1 (32/16) or OSB equivalent.
Nailing: 8d common nails @ 4" OC to all plywood panel edges, top and bottom wall plates, end elements, and posts at holdown anchors. 8d @ 12" OC to all intermediate supports. (As Scheduled)
Blocking: 2x thickness of wall blocking at all unsupported panel edges. (As Scheduled)

Floor Sheathing:
Type: 3/4" APA Rated Exposure 1 Tongue and Groove sheathing (48/24).
Nailing: Glue and nail with 10d galvanized common nails @ 4" OC to all supported plywood panel edges; to blocking over shearwalls, use 10d common nails @ 12" OC and glue to all intermediate supports. (As Scheduled)
Blocking: Not required (As Scheduled)
Layout: Face grain perpendicular to supports.

Roof Sheathing:
Type: 5/8" APA Rated Exposure (40/20) or OSB equivalent.
Nailing: 10d common nails @ 6" OC to all plywood panel edges, beams, blocking over shearwalls, and diaphragm boundaries. 10d @ 12" OC to all intermediate supports. (As Scheduled)
Blocking: Not required (As Scheduled)
Layout: Face grain perpendicular to supports.

PLYWOOD DIAPHRAGM FASTENERS
1. Substitution of fasteners other than those specified in the Structural Notes or the Plywood Diaphragm Schedule is not allowed except for the following:

Specified Fastener	Substitute
8d common nail	14 gage x 2" staple

2. All staples must have 7/16" crown width.
3. Nails shall be placed not less than 3/8" from the edge of plywood panels. Stagger nails each side of panel edge.
4. Where plywood is applied both sides of shear walls stagger panel edges each side on adjacent studs.
5. At roof and floor diaphragms, apply nails at panel edge spacing to all drag struts, tension chords, blocking over bearing and shear walls, and any other special diaphragm members noted on plans.
6. At plywood shear walls, apply nails at panel edge spacing to top and bottom plates, end posts, all vertical elements at holdown anchors, and horizontal blocking.
7. All panel edges of plywood shear walls must be blocked.

DEKOLD ARCHITECTURE INC.
104 E 600 S #540, Heber City, UT 84032
(208) 206-7338
www.behance.net/kevindekold
kevindekold@hotmail.com

PROFESSIONAL STRUCTURAL ENGINEER
SCOTT A. WILSON
#165894
STATE OF UTAH
3.17.25

Civil — CACHE LANDMARK — 95 W Golf Course Rd Ste. 101, Logan, UT 84321 — (435)713-0099
Landscape — LDG — 326 W 200 S #102, Salt Lake City, UT 84101 — (435)901-3127
Structural — CALDER RICHARDS — 1905 S Redwood Rd, Ste. 102, Salt Lake City, UT 84104 — (801)466-1699
Mechanical — ROYAL — 1873 S E Bay Blvd, Provo, UT 84606 — (801)375-2228
Electrical — BNA CONSULTING — 4225 W Lake Park Blvd St. 275, West Valley City, UT 84121 — (435)628-3670

AIS - WEST VALLEY
2574 S. REDWOOD ROAD
WEST VALLEY, UT 84119

REVISIONS:
1 2/27/25 BID
2 -
3 -

SHEET NUMBER:
S001
03/19/2025

WOOD FRAMING

1. Refer to Structural drawings and specifications for details, additional notes and schedules pertaining to plywood roof, floor and shearwall diaphragms.
2. Structural framing lumber shall be clearly marked and meet the following minimum grades as defined by the current version of the National Design Specification for Wood Construction:
   - A. 2" to 4" thick, 5" and wider: Douglas Fir-Larch Grade No.2
   - B. Bearing Wall Studs: Douglas Fir-Larch
     Up to 8' length: Stud Grade or better
     Over 8' length: No. 2 or better
   - C. Posts and Timbers: Douglas Fir-Larch Grade No. 1
   - D. Sill Plates in contact with concrete: Foundation Grade Redwood OR Pressure Treated Douglas Fir-Larch Grade No. 1
2. All roof and floor joists shall be supported laterally at the ends and at each support by solid blocking 2" thick and the full depth of the joist, except where the end of the joist is attached to a header or bond beam with metal anchors or hangers. Provide approved bridging at a maximum of 8'-0" OC between supports.
3. All wood beams and headers shall bear on minimum of two trimmer (jack) studs at each end unless shown otherwise.
4. All wood posts and built-up columns shall run continuous.
5. Built-up columns shall be spiked together with 16d spikes at 12" OC.
6. Provide double joists beneath all walls running parallel to joists.
7. All nails specified on details or scheduled shall be common nails unless noted otherwise.
8. Holes for nails, where necessary to prevent splitting, shall be bored of a diameter smaller than that of the nails.
9. All joists and beam hangers, framing anchors, strap ties, and other metal fasteners for wood framing shall be Simpson brand (or approved equivalent).
10. Unless noted otherwise, anchor all trusses, rafters and joists to supports with galvanized framing anchors.
11. Unless noted otherwise, provide 2x continuous blocking between main members at all ridges, hips and valleys.
12. Cutting and notching of studs. In exterior walls and bearing partitions, any wood stud is permitted to be cut or notched to a depth not exceeding 25% of its width. Cutting or notching of studs to a depth not greater than 40% of the width is permitted in nonbearing partitions supporting no loads other than the weight of the partition.
13. Bored holes in studs. A hole not greater in diameter than 40% of the stud width is permitted to be bored in any wood stud. Bored holes not greater than 60% of the width of the stud are permitted in nonbearing partitions or in any wall where each bored stud is doubled, provided not more than two such successive doubled studs are so bored.
14. In no case shall the edge of the bored hole be nearer than 5/8" to the edge of the stud.
15. Nails and staples shall comply with the requirements of ASTM F 1667.
16. Bearing walls, exterior walls, and shear walls shall be installed as follows (minimum):

Stud Height	Wall Construction
< 12'	2x6 Studs @ 16" OC or 2x4 @ 12" OC
12' - 16'	2x6 Studs @ 12" OC
16' - 20"	(2) 2x6 Studs @ 16" OC

17. Maximum height of non-bearing stud walls shall be 14' for 2x4 studs and 20' for 2x6 studs.
18. Substitutions of structural wood framing members from those shown on the structural drawings will not be accepted without prior written approval from the Structural Engineer.
19. All fasteners and connectors that will be in contact with preservative-treated and fire-retardant-treated wood shall adhere to the requirements in Section 2304.10.6 of the IBC.
20. Provide wood framing connections per Fastening Schedule in Table 2304.10.2 in IBC unless noted otherwise in drawings.
21. All sheathing for diaphragms and shearwalls shall have a minimum Bond Classification of Exposure 1, unless noted otherwise on the plans. Any sheathing that has begun to swell and/or is damaged due to excessive moisture shall be removed and replaced at the Contractor's expense. Exterior grade sheathing can be utilized where prolonged exposure to moisture is anticipated due to the construction timeline.

MANUFACTURED TIMBER PRODUCTS

Glue-Laminated Beams (GLB):

Unless noted otherwise, all glue-laminated beams shall be of Douglas Fir (North) Grade 24F-V8 and have the following properties:

Min Allowable Bending Stress	Fb = 2400 PSI
Min Allowable Shear Stress	Fv = 265 PSI
Modulus of Elasticity	E = 1,800,000 PSI

Unless noted otherwise on the drawings, all glue-laminated beams shall have a positive camber of an 1800' radius.

Exposed glue-laminated beams shall be of Architectural Grade.

Laminated Veneer Lumber (LVL):

Unless noted otherwise, LVL beams shall have the following properties:

Min Allowable Bending Stress	Fb = 2600 PSI
Min Allowable Shear Stress	Fv = 285 PSI
Modulus of Elasticity	E = 2,000,000 PSI

Parallel Strand Lumber (PSL):

Unless noted otherwise, PSL members shall have the following properties:

Min Allowable Bending Stress	Fb = 2900 PSI
Min Allowable Shear Stress	Fv = 290 PSI
Modulus of Elasticity	E = 2,200,000 PSI
Compression parallel to grain	Fc = 2900 PSI
Compression perpendicular to grain and parallel to wide face of strands	Fc = 625 PSI

Laminated Strand Lumber (LSL):

Unless noted otherwise, LSL members shall have the following properties:

Min Allowable Bending Stress	Fb = 2325 PSI
Min Allowable Shear Stress	Fv = 310 PSI
Modulus of Elasticity	E = 1,550,000 PSI
Compression parallel to grain	Fc = 2170 PSI
Compression perpendicular to grain and parallel to wide face of strands	Fc = 900 PSI

METAL PLATED ROOF TRUSS NOTES

1. Metal plate connected wood trusses shall be manufactured as required by ANSI/TPI 1. Manufacturer of trusses using metal plate connectors shall retain an approved agency to make nonscheduled inspections of truss manufacturing and delivery operations. The inspection shall cover all phases of truss operations, including lumber storage, handling, cutting fixtures, presses or rollers, manufacturing, bundling and banding.
2. It shall be the truss fabricator's responsibility to determine the size and grade lumber required for each truss member. Where member size is indicated on the drawings the fabricator shall determine the required grade lumber. Grades and sizes indicated on drawings are minimums only. Internal truss configuration may be changed to conform to manufacturer's standard practice if approved by the Architect / Engineer.
3. Prior to fabrication, the truss fabricator shall provide design calculations for each truss to the Structural Engineer for review. Calculations shall include member loads, forces and critical stresses, and mid-span deflections. Calculations and drawings shall also indicate type and location of bracing required both during construction and permanently. Calculations shall bear the stamp of a Licensed Professional Engineer in the State where the project is to be constructed.
4. Prior to fabrication, shop drawings for all roof trusses shall be reviewed by Structural Engineer. Reviewed shop drawings shall be delivered with the shipment of trusses to the job site.
5. Moment coefficients used in the truss design shall be 1/8 for one and two span conditions and 1/10 for three or more spans. The effective length factor used for webs shall be 1.0.
6. Toothed metal plates at connector joints shall be designed for the full-member design loads without considering wood to wood bearing. A stress increase for the value of a connector will not be allowed in any circumstance. Net area of metal gusset plates shall be larger by 25% than that required by calculated stresses. Increased plate size shall be made by increasing the plate dimension in each direction. The area underneath the gusset plate for a distance of 1/2" on either side of a joint cannot be counted as effective plate area. The connectors shall be balanced on the joint as stresses require and dimensioned as to their location. Only one connection per joint per side will be allowed. Connectors shall meet or exceed the specifications of the Truss Plate Institute.
7. Minimum size of any connector shall be 15 sq in.
8. Minimum bite of any gusset plate on a trussed member shall be 2 1/2".
9. Splices in top and bottom chords shall occur at a joint or within one-quarter of the span of a panel of the truss. Each section of the chord member shall be involved in two joints prior to being spliced.
10. The following design criteria shall be used:
    - Top Chord Live Load (Snow) = 20 PSF, Duration Factor = 1.15
    - Top Chord Dead Load = 12 PSF
    - Bottom Chord Live Load = (10 PSF) without Top Chord Live Load
    - Bottom Chord Dead Load = 8 PSF
    - Total = 40 PSF
11. All bracing of truss members, required by the manufacturer's design, shall be provided and installed at the indicated locations by the contractor. This bracing shall be in addition to any bracing shown or noted on the drawings.
12. All continuous lateral bracing shall be laterally supported at each end by anchoring bracing member to end walls or by providing a diagonal brace at each end of bracing member and at 20' intervals.
13. Provide a 2x4 continuous lateral brace along the bottom chord of all trusses. Space braces a maximum of 12'-0" OC.
14. Provide camber on all trusses.
15. Unless noted otherwise, attach truss to all points of bearing with one Simpson A35 (galvanized) framing anchor or equivalent.
16. Where prefabricated trusses, hips or jacks frame into a prefabricated girder truss or other framing member shown on plan the supporting connection shall be designed and specified by the truss manufacturer. The specified hangers and framing anchors shall be provided by the Contractor.
17. Unless noted otherwise, provide solid 2x blocking or prefabricated truss blocking between trusses at all end bearing conditions and over all shear walls.
18. All metal plates shall be galvanized steel and shall be on both sides of each connection. Submit a copy of the ICC-ES approval, including allowable stresses established by this committee, for metal plates used.
19. All lumber shall be Douglas Fir or Yellow Pine #1 Grade. Moisture content shall not exceed 19% nor shall be less than 7%. Handling, storage, and installation of all trusses shall be done such that the specified minimum and maximum moisture content limits are not exceeded. Grade stamps shall appear on all members.
20. Fabricator shall periodically inspect installation of trusses and shall certify in writing that trusses and bracing and bridging have been installed according to their specifications.

PREFABRICATED WOOD JOISTS

1. Joists shall be by manufacturer specified on the drawings (or approved equivalent).
2. The fabrication plant must have a current ICC-ES recommendation card applicable to the particular joist assembly and plant location involved.
3. Structural capacities and design provisions for prefabricated wood I-Joists shall be established and monitored in accordance with ASTM D 5055.
4. Structural calculations shall bear the seal of a Professional Engineer, registered in the State of the project, and Load Tables shall be approved by ICC-ES.
5. Manufacturer shall provide all blocking, web stiffeners, etc, required for proper erection of joists, including items not shown on drawings. Shop drawings shall clearly indicate locations for these items.
6. Unless noted otherwise, provide solid, full depth prefabricated blocking at the ends and over each support.
7. Anchor all joists to supports with galvanized framing anchors.

SPECIAL INSPECTION - STEEL CONSTRUCTION (IBC 1705.2)

Item	C/P ◄(A)
INSPECTION TASKS PRIOR TO WELDING (AISC 360-16, TABLE N5.4-1; AISC 341-16, TABLE J6.1)	
Welder qualification records and continuity records	C
Welding procedure specifications (WPSs) available	C
Manufacturer's certification for welding consumables available	C
Material identification (Type / Grade)	P
Welder identification system ◄(B)	P
Fit-up of groove welds (including joint geometry)	P
Fit-up of CJP groove welds of HSS, T-, Y-, and K- joints	C
Configuration and finish of access holes	P
Fit-up of fillet welds	P
Checking welding equipment	P
INSPECTION TASKS DURING WELDING (AISC 360-16, TABLE N5.4-2; AISC 341-16, TABLE J6.2)	
Control and handling of welding consumables	P
No welding over cracked tack welds	P
Environmental conditions	P
Welding procedure specification followed	P
Welding techniques	P
Placement and installation of HSAs	C
INSPECTION TASKS AFTER WELDING (AISC 360-16, TABLE N5.4-3; AISC 341-16, TABLE J6.3)	
Welds cleaned	P
Size, length, and location of welds	C
Welds must meet visual acceptance criteria	C
Arc strikes	C
k-Area ◄(C)	C
Weld access holes in rolled heavy shapes and built-up heavy shapes ◄(D)	C
Backing removed and weld tabs removed (if required)	C
Repair activities	C
Document acceptance or rejection of welded joint or member	C
No prohibited welds have been added without approval of the EOR	P
INSPECTION TASKS PRIOR TO BOLTING (AISC 360-16, TABLE N5.6-1; AISC 341-16, TABLE J7.1)	
Manufacturer's certifications available for fastener materials	C
Fasteners marked in accordance with ASTM requirements	P
Correct fasteners selected for the joint detail (Grade / Type / Bolt Length / If threads are to be excluded from shear plane)	P
Correct bolting procedure selected for joint detail	P
Connecting elements, including the appropriate faying surface condition and hole preparation, if specified, meet applicable requirements	P
Pre-installation verification testing by installation personnel observed and documented for fastener assemblies and methods used	P
Protected storage provided for bolts, nuts, washers, and other fastener components	P
INSPECTION TASKS DURING BOLTING (AISC 360-16, TABLE N5.6-2; AISC 341-16, TABLE J7.2)	
Fastener assemblies, placed in all holes and washers and nuts are positioned as required	P
Joint brought to the snug-tight conditions prior to the pre-tensioning operations	P
Fastener component not turned by the wrench prevented from rotating	P
Fasteners are pre-tensioned in accordance with the RCSC specification, progressing systematically from the most rigid point toward free edges	P
INSPECTION TASKS AFTER BOLTING (AISC 360-16, TABLE N5.6-3; AISC 341-16, TABLE J7.3)	
Document acceptance or rejection of bolted connection	C
OTHER STEEL INSPECTIONS (AISC 360-16, SECTION N5.7 AND N5.8)	
Inspect galvanized structural steel main members for cracks subsequent to galvanizing	P
Structural steel details	P
Anchor rods and other embedments supporting structural steel	P
TABLE NOTES:	
► (A) Continuous or periodic (C/P) refers to the frequency of inspection, which may be continuous during the task listed or periodically during the listed task, as defined in the table.	
► (B) The fabricator or erector, as applicable, shall maintain a system by which a welder who has welded a joint or member can be identified. Stamps, if used, shall be low-stress type.	
► (C) When welding of doubler plates, continuity plates or stiffeners has been performed in the k-Area, visually inspect the web k-Area for cracks within 3" of the weld.	
► (D) After heavy shapes are welded, visually inspect the weld access hole for cracks.	

SPECIAL INSPECTION - CONCRETE CONSTRUCTION (IBC 1705.3)

Item	C/P ◄(A)
INSPECTION OF CONCRETE CONSTRUCTION (IBC 1705.3, TABLE 1705.3)	
1. Inspect reinforcement, including prestressing tendons, and verify placement	P
2. Reinforcing bar welding:	
- A. Verify weldability of reinforcing bars other than ASTM A706;	P
- B. Inspect single-pass fillet welds, maximum 5/16"; and	P
- C. Inspect all other welds	C
3. Inspect anchors cast in concrete	P
4. Inspect anchors post-installed in hardened concrete members ◄(B)	
- A. Adhesive anchors installed in horizontally or upwardly inclined orientations to resist sustained tension loads.	C
- B. Mechanical anchors and adhesive anchors not defined in 4.A	P
5. Verify use of required design mix	P
6. Prior to concrete placement, fabricate specimens for strength tests, perform slump and air content tests, and determine the temperature of the concrete	C
7. Inspect concrete and shotcrete placement for proper application techniques	C
8. Verify maintenance of specified curing temperature and techniques	P
9. Inspect formwork for shape, location and dimensions of the concrete member being formed	P
TABLE NOTES:	
► (A) Continuous or periodic (C/P) refers to the frequency of inspection, which may be continuous during the task listed or periodically during the listed task, as defined in the table.	
► (B) Specific requirements for special inspection shall be included in the research report for the anchor issued by an approved source in accordance with 17.8.2 in ACI 318, or other qualification procedures. Where specific requirements are not provided, special inspection requirements shall be specified by the registered design professional and shall be approved by the building official prior to the commencement of the work.	

SPECIAL INSPECTION - WOOD CONSTRUCTION (IBC 1705.5)

Item	C/P ◄(A)
INSPECTION OF WOOD CONSTRUCTION (IBC 1705.5)	
A. Special inspections of prefabricated wood structural elements and assemblies shall be in accordance with Section 1704.2.5.	C
TABLE NOTES:	
► (A) Continuous or periodic (C/P) refers to the frequency of inspection, which may be continuous during the task listed or periodically during the listed task, as defined in the table.	

SPECIAL INSPECTION - WIND RESISTANCE (IBC 1705.12)

Item	C/P ◄(A)
THIS SECTION IS ONLY REQUIRED FOR: 1. Wind Exposure Category B, where V is 150 miles per hour or greater. OR 2. Wind Exposure Category C or D, where V is 140 miles per hour or greater.	
INSPECTION OF STRUCTURAL WOOD (IBC 1705.12.1)	
Gluing operations of elements of the Main-Wind-Force-Resisting-System	C
Nailing, bolting, anchoring, and other fastening components within the Main-Wind-Force-Resisting-System, including shear walls, diaphragms, drag struts, braces, and hold-downs. Exception: No special inspection required for shear walls, shear panels, and diaphragms when specified fastener spacing at the panel edges is more than 4 inches on center.	P
INSPECTION OF WIND RESISTING COMPONENTS (IBC 1705.12.3)	
Fasteners of roof deck and roof framing connections	P
Wall connections to roof and floor diaphragms and framing	P
TABLE NOTES:	
► (A) Continuous or periodic (C/P) refers to the frequency of inspection, which may be continuous during the task listed or periodically during the listed task, as defined in the table.	

SPECIAL INSPECTION - SOILS (IBC 1705.6)

Item	C/P ◄(A)
INSPECTION OF SOILS (IBC TABLE 1705.6)	
Verify materials below shallow foundations are adequate to achieve the design bearing capacity	P
Verify excavations are extended to proper depth and have reached proper material	P
Perform classification and testing of compacted fill materials	P
During fill placement, verify use of proper materials and procedures in accordance with the provisions of the approved geotechnical report. Verify densities and lift thicknesses during placement and compaction of compacted fill.	C
Prior to placement of compacted fill, observe subgrade and verify that site has been prepared properly	P
TABLE NOTES:	
► (A) Continuous or periodic (C/P) refers to the frequency of inspection, which may be continuous during the task listed or periodically during the listed task, as defined in the table.	

SPECIAL INSPECTION - SEISMIC RESISTANCE (IBC 1705.13)

Item	C/P ◄(A)
INSPECTION OF STRUCTURAL STEEL (IBC 1705.13.1)	
- A. Inspection prior, during, and after welding and bolting (AISC 341-16, Tables J6.1 - J7.3). Same requirements as AISC 360-16, Tables N5.4-1 - N5.6-3.	-
INSPECTION OF STRUCTURAL WOOD (IBC 1705.13.2)	
Gluing operations of elements of the Seismic-Force-Resisting-System	C
Nailing, bolting, anchoring, and other fastening components within the Seismic-Force-Resisting-System, including shear walls, diaphragms, drag struts, braces, shear panels, and hold-downs. Exception: No special inspection required for shear walls, shear panels, and diaphragms when specified fastener spacing at the panel edges is more than 4 inches on center.	P
DESIGNATED SEISMIC SYSTEM (1705.13.4)	
For structures assigned to Seismic Design Category C, D, E, or F, the special inspector shall examine designated seismic systems requiring qualification in accordance with Section 13.2.2 of ASCE 7 and verify that the label, anchorage, and mounting conform to the certificate of compliance.	-
TABLE NOTES:	
► (A) Continuous or periodic (C/P) refers to the frequency of inspection, which may be continuous during the task listed or periodically during the listed task, as defined in the table.	

TERMS AND ABBREVIATIONS

ABBRV	TERM
(#)	Numerical quantities when enclosed in parentheses
A/E	Architect / Engineer
AB	Anchor Bolt
ABV	Above
ADDM	Addendum
AFF	Above Finished Floor
ALUM	Aluminum
APPROX	Approximately
ARCH	Architect (Architectural)*
ASTM	American Society for Testing and Materials
B PL	Base Plate
B/B	Back to Back
bf	Beam Flange Width
BLKG	Blocking
BLW	Below
BM	Beam
BOS	Bottom of Steel
BOT	Bottom
BRG	Bearing
BTWN	Between
C TO C	Center to Center
CD	Contract Documents
CIP	Cast-In-Place
CJ	Construction Joint (Control Joint)*
CL	Centerline
CMU	Concrete Masonry Unit
COL	Column
CONC	Concrete
CONN	Connection
CONT	Continuous (Continue)*
CONTR	Contractor
COORD	Coordinate
CTR	Center
D	Depth
d	Pennyweight Nail
DB	Deck Bearing
DBA	Deformed Bar Anchor
DBL	Double
DFS	Douglas Fir - South
DIA	Diameter
DIAG	Diagonal
DIM	Dimension
DL	Dead Load
DTL	Detail
DWG	Drawing
(E)	Existing
E	Modulus of Elasticity
EA	Each
EJ	Expansion Joint
EL	Elevation
ELEV	Elevator
ENGR	Engineer
EQ	Equal
EQL SP	Equally Spaced (Equal Spaces)*
EQUIP	Equipment
EQUIV	Equivalent
EST	Estimate
ETC	And so forth
EW	Each Way
EXCL	Exclude
EXP	Expansion
EXT	Exterior
(F)	Future
FDTN	Foundation
FFE	Finished Floor Elevation
FIN	Finish (Finished)*
FLR	Floor
FRMG	Framing
FSE	Finished Slab Elevation
FTG	Footing
FV	Field Verify
GA	Gage / Gauge
GALV	Galvanized
GLB	Glued Laminated Wood Beam
HGR	Hanger
HORIZ	Horizontal (Horizontally)*
HSA	Headed Stud Anchor
HSS	Hollow Structural Section
I	Moment of Inertia
ID	Inside Diameter
INT	Interior

TERMS AND ABBREVIATIONS

ABBRV	TERM
JST	Joist
KIP (K)	Thousand Pounds
KIP FT	Thousand Foot/Pounds
KLF	KIPs per Lineal Foot
LB	Pound
LHS	Left Hand Shoe
LL	Live Load
LLH	Long Leg Horizontal
LLV	Long Leg Vertical
LONG	Longitudinal
LSL	Laminated Strand Lumber
LTWT	Lightweight
LVL	Laminated Veneer Lumber
MAX	Maximum
MECH	Mechanical
MFR	Manufacturer
MIN	Minimum
MISC	Miscellaneous
N/A	Not Applicable
NTS	Not to Scale
OC	On Center
OD	Outside Diameter
OPNG	Opening
OPP	Opposite
OPT	Optional
OSB	Oriented Strand Board
P/T	Pressure Treated
PERP	Perpendicular
PLF	Pounds per Lineal Foot
PSL	Parallel Strand Lumber
PT	Post Tensioned
QA	Quality Assurance
QC	Quality Control
(RE)	Remove Existing
REINF	Reinforce (Reinforced, Reinforcing)*
REQD	Required
RFI	Request for Information
RS	Rough Sawn
RTU	Roof Top Unit
SCHED	Schedule
SECT	Section
SF	Square Foot (Feet)*
SGL	Single
SHTHG	Sheathing
SIM	Similar
SL	Snow Load
SOG	Slab on Grade
SPCL	Special
SPEC	Specification
SQ	Square
SSH	Short Slotted Holes
STD	Standard
STIF	Stiffener
STRUCT	Structure (Structural)*
SYMM	Symmetrical
T&B	Top & Bottom
T&G	Tongue and Groove
THRU	Through
TO FDTN	Top of Foundation
TOB	Top of Beam
TOC	Top of Concrete
TOF	Top of Footing
TOJ	Top of Joist
TOM	Top of Masonry
TOP	Top of Parapet
TOS	Top of Steel
TOW	Top of Wall
TWS	Threaded Welded Stud
TYP	Typical
UNO	Unless Noted Otherwise
VERT	Vertical (Vertically)*
W/	With
W/O	Without
WL	Wind Load
WLD	Weld (Welded)*
WWF	Welded Wire Fabric
XS	Extra Strong
XXS	Double Extra Strong

NOTES

1. * CONTEXT INDICATES WHICH ABBREVIATION TERM IS IMPLIED. CONTACT ENGINEER IF MEANING IS NOT OBVIOUS.
2. NOT ALL ABBREVIATIONS ARE USED.
3. MANY ABBREVIATIONS MAY BE MADE PLURAL BY ADDING AN S SUFFIX.
4. FOR ABBREVIATIONS NOT LISTED, REFER TO **US NATIONAL CAD STANDARD, VERSION 3.1, TERMS AND ABBREVIATIONS SECTION**, OR CONTACT ENGINEER.

A6 **TERMS & ABBREVIATIONS**
NO SCALE
1717_01

DEKOLD ARCHITECTURE INC.
104 E 600 S #540, Heber City, UT 84032
(208) 206-7338
www.behance.net/kevindekold
kevindekold@hotmail.com

Civil — CACHE LANDMARK — 95 W Golf Course Rd St. 101, Logan, UT 84321, (435)713-0099
Landscape — LDG — 326 W 200 S #102, Salt Lake City, UT 84101, (435)901-3127
Structural — CALDER RICHARDS — 1805 S Redwood Rd, St. 102, Salt Lake City, UT 84104, (801)466-1699
Mechanical — ROYAL — 1837 S E Bay Blvd, Provo, UT 84606, (801)375-2228
Electrical — BNA CONSULTING — 4225 W Lake Park Blvd Ste. 275, West Valley City, UT 84121, (435)628-3670

PROFESSIONAL STRUCTURAL ENGINEER — SCOTT A. WILSON — #10509944 — STATE OF UTAH

AIS - WEST VALLEY
2574 S. REDWOOD ROAD
WEST VALLEY, UT 84119

REVISIONS:
1 2/27/25 BID
2 -
3 -

SHEET NUMBER:
S002
03/19/2025

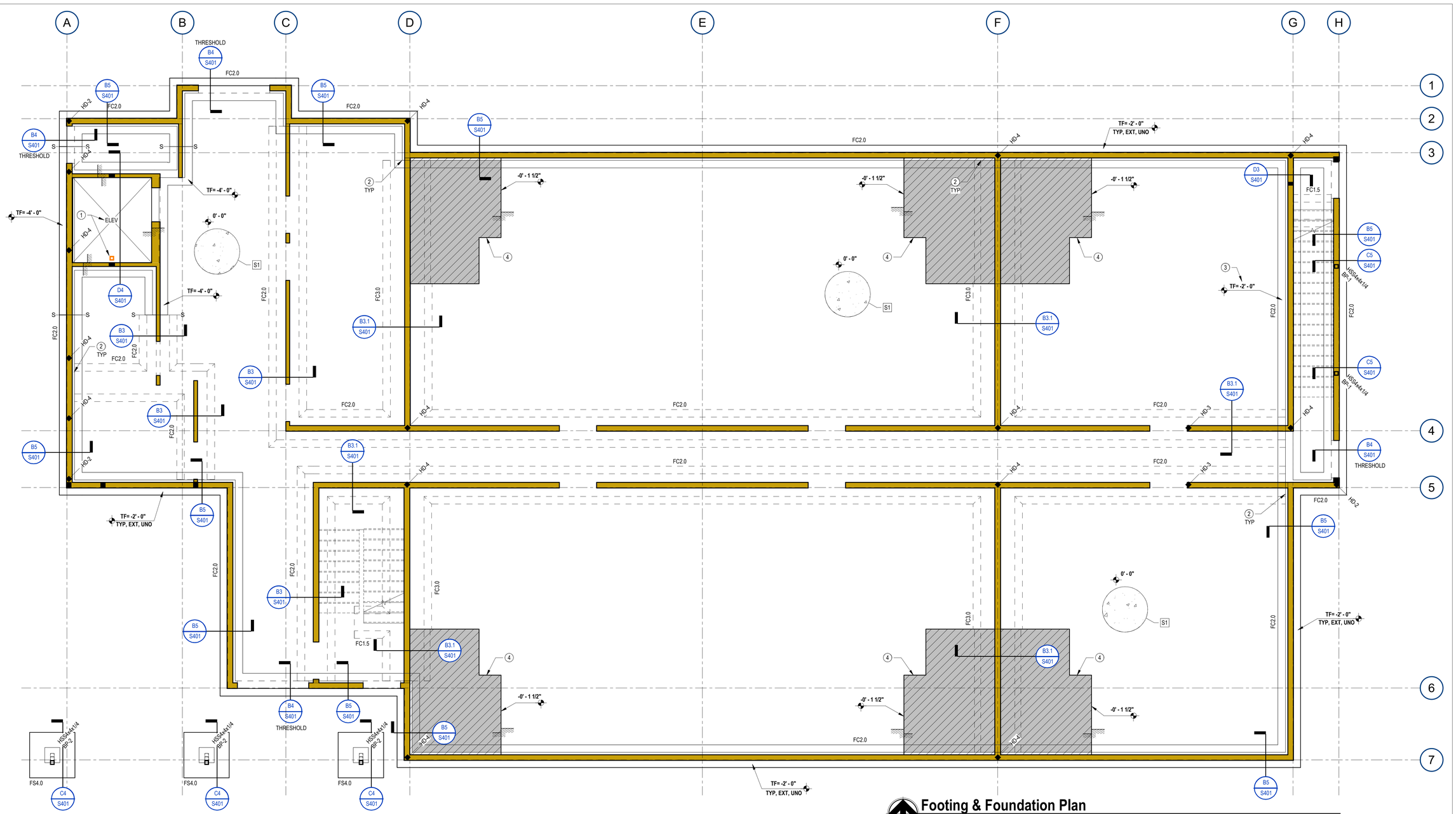

Footing & Foundation Plan

1/4" = 1'-0"

PLAN NOTES - FOOTING & FDTN

- # NUMBERED NOTES BELOW ARE KEYED ON PLAN.
- R# DENOTES REINFORCING KEYED ON PLAN.
- * SEE ARCHITECTURAL DRAWINGS FOR ALL DIMENSIONS, TYPICAL.
- ** NOT ALL NOTES MAY APPLY TO AREA SHOWN ON SHEET.
- A SEE STRUCTURAL NOTES ON SHEET S001 FOR ADDITIONAL INFORMATION.
- B TOP OF CONCRETE SLAB ELEVATION = 0'-0", UNLESS NOTED THUS: SLOPE UNIFORMLY TO FLOOR DRAINS. xxx'-x"
- C PLACE CONTROL JOINTS AND CONSTRUCTION JOINTS IN SLAB PER STRUCTURAL NOTES AND DETAIL A2/S401.
- D CENTER FOOTINGS ON WALLS AND COLUMNS UNLESS DIMENSIONED OTHERWISE ON PLANS.
- E SEE STRUCTURAL NOTES ON SHEET S001 FOR MINIMUM FROST COVER FOR ALL EXTERIOR FOOTINGS. FOOTING ELEVATIONS SHOWN ARE BASED ON A UNIFORM GRADE 6" BELOW SLAB PLUS FROST COVER. COORDINATE ELEVATIONS SHOWN WITH CIVIL AND SITE PLANS FOR ANY ADDITIONAL DEPTH THAT MAY BE REQUIRED TO MAINTAIN MINIMUM FROST COVER OVER FOOTINGS.
- F SEE DETAIL A4/S401 FOR TYPICAL CONCRETE WALL REINFORCEMENT AT CORNERS AND INTERSECTIONS.
- G SEE ARCHITECTURAL / SITE DRAWINGS FOR INFORMATION AND LOCATION OF SITE WALLS, STEPS, PLANTERS, RAMPS, ETC.
- H SEE ARCHITECTURAL DRAWINGS FOR DETAILED ELEVATIONS AND CONFIGURATIONS OF LANDINGS AND STAIRS. STAIR STRINGERS SHALL BE CUT FROM LVLs AS SHOWN IN DETAIL C3/S401.
- J WHERE PLUMBING LINES OR ELECTRICAL CONDUIT INTERSECT FOOTINGS, SEE DETAIL C1/S401.
- 1 ELEVATOR RAIL SUPPORT COLUMNS SHOWN FOR BID PURPOSES ONLY. COORDINATE REQUIREMENTS WITH ELEVATOR MANUFACTURER / SUPPLIER. SEE DETAIL D4/S401 FOR TYPICAL FRAMING REQUIREMENTS.
- 2 DRILL & EPOXY LONG HORIZONTAL FOOTING REINFORCEMENT 4" MINIMUM INTO FOUNDATION WALL AT ABUTTED INTERIOR FOOTINGS.
- 3 FOOTING ELEVATIONS ARE BASED ON A UNIFORM GRADE 6" BELOW SLAB PLUS 2'-6" FROST COVER. COOORDINATE ELEVATIONS SHOWN WITH CIVIL AND SITE PLANS FOR ANY ADDITIONAL DEPTH THAT MAY BE REQUIRED TO MAINTAIN MINIMUM FROST COVER AT FOOTINGS.
- 4 RECESS SLAB FOR SHOWER & TILE GROUT.
- S1 SLAB ON GRADE SHALL BE 4" CONCRETE OVER 4" FREE-DRAINING GRAVEL, UNO. REINFORCE SLAB WITH 6x6-W1.4xW1.4 WWF (USE FLAT SHEETS).

FTG/FDTN PLAN LEGEND

- FCx.x, FSx.x, FRx.x/y.y — CONTINUOUS FOOTING, SPOT FOOTING, RECTANGULAR FOOTING TYPES RESPECTIVELY, SEE SCHEDULE **A4/S601**
- S — — — S — FOOTING STEP, LOCATIONS SHOWN SCHEMATICALLY ONLY, SEE DETAIL **A5/S401**
- CHANGE IN ELEVATION OR STEP IN SLAB, SEE ARCH DWGS FOR EXACT LOCATION
- xxx'-xx" — TOP OF CONCRETE SLAB ELEVATION
- TW xxx'-xx" — TOP OF WALL ELEVATION
- TP xxx'-xx" — TOP OF PIER ELEVATION
- TF xx'-xx" — TOP OF FTG ELEVATION
- SG# — CONCRETE SLAB ON GRADE, [SG#]
- FCx.x — CONCRETE FOOTING & FDTN WALL, SEE SCHEDULE **A4/S601**
- CONCRETE WALL, SEE GENERAL NOTES
- RECESS IN CONCRETE FDTN WALL
- SITE WALL, COORD W/ ARCH / CIVIL DWGS
- SW-# — WOOD STUD SHEARWALL TYPE, [SW-#], SEE SCHEDULE **D4/S601**
- WOOD STUD BEARING WALL, SEE GENERAL NOTES
- HD-# — SHEARWALL HOLDOWN, [HD-#], SEE SCHEDULE **B2/S601**, **B1/S401** OR **B2/S401**
- BP-# — STEEL COLUMN: WIDE FLANGE, TUBE, PIPE, BASE PLATE TYPE, [BP-#], SEE SCHEDULE **B4/S601**
- C# — CONCRETE COLUMN
- WOOD POST

DEKOLD ARCHITECTURE INC.
104 E 600 S #540, Heber City, UT 84032
(208) 206-7338
www.behance.net/kevindekold
kevindekold@hotmail.com

Civil — CACHE LANDMARK — 95 W Golf Course Rd St. 101, Logan, UT 84321, (435)713-0099
Landscape — LDG — 328 W 200 S #102, Salt Lake City, UT 84101, (435)901-3127
Structural — CALDER RICHARDS — 1905 S Redwood Rd, St. 102, Salt Lake City, UT 84104, (801)466-1699
Mechanical — ROYAL — 1837 S E Bay Blvd Provo, UT 84606, (801)375-2228
Electrical — BNA CONSULTING — 4225 W Lake Park Blvd Ste. 275, West Valley City, UT 84121, (435)628-3670

PROFESSIONAL STRUCTURAL ENGINEER — SCOTT A. WILSON — #10538904 — STATE OF UTAH — 3.17.25

AIS - WEST VALLEY
2574 S. REDWOOD ROAD
WEST VALLEY, UT 84119

REVISIONS:
1 2/27/25 BID
2 -
3 -

SHEET NUMBER:
S101
03/19/2025

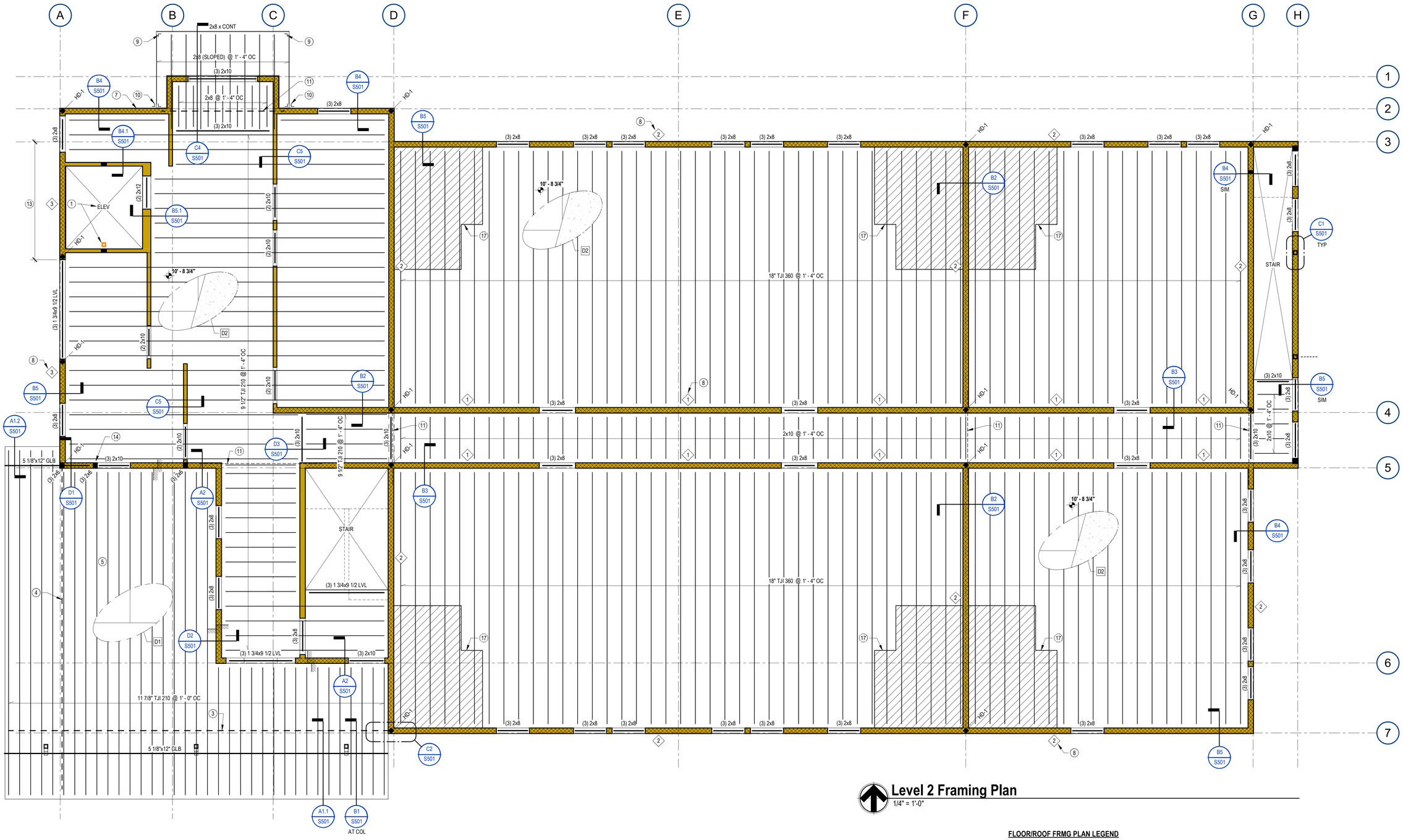

Level 2 Framing Plan

1/4" = 1'-0"

PLAN NOTES - FLOOR/ROOF FRMG

- # NUMBERED NOTES BELOW ARE KEYED ON PLAN.
- * SEE ARCHITECTURAL DRAWINGS FOR ALL DIMENSIONS, TYPICAL.
- ** NOT ALL NOTES MAY APPLY TO AREA SHOWN ON SHEET.
- A SEE STRUCTURAL NOTES ON SHEET S001 FOR ADDITIONAL INFORMATION.
- B TOP OF SHEATHING ELEVATION = xxx'-x", UNLESS NOTED THUS:
- C SEE ARCHITECTURAL DRAWINGS FOR TOP OF WALL ELEVATIONS.
- D ALL FLOOR HEADERS ARE (3) 2x8, UNO. ALL ROOF HEADERS ARE(3) 2x8, UNO.
- E SEE DETAIL A4/S501 FOR KING STUD AND TRIMMER STUD REQUIREMENTS AT WALL OPENINGS.
- F PROVIDE SIMPSON H2.5A HURRICANE TIES AT ALL JOIST AND TRUSS EXTERIOR BEARING CONDITIONS, TYP. SEE DETAIL A5/S502 FOR ADDITIONAL INFORMATION.
- G SEE ARCHITECTURAL DRAWINGS FOR DETAILED ELEVATIONS AND CONFIGURATIONS OF LANDINGS AND STAIRS. STAIR STRINGERS SHALL BE CUT FROM LVLs AS SHOWN IN DETAIL C3/S401.
- H ALL BEAMS AND HEADERS SHALL BEAR ON (2) 2x JACK STUDS (JS) AND HAVE (2) 2x KING STUDS (KS) AT EACH SUPPORT, UNO.
- J SEE C1/S501 FOR COLUMNS IN SHEARWALLS.
- K SE DETAIL A5/S501 FOR TYPICAL DOUBLE TOP PLATE SPLICE.

PLAN NOTES - FLOOR/ROOF FRMG

1. ELEVATOR RAIL SUPPORT COLUMNS SHOWN FOR BID PURPOSES ONLY, COORDINATE REQUIREMENTS WITH ELEVATOR MANUFACTURER / SUPPLIER. SEE DETAIL D4/S401 FOR TYPICAL FRAMING REQUIREMENTS.
2. MECHANICAL ROOFTOP UNIT (SHOWN SCHEMATICALLY ONLY). DUCT PENETRATIONS BELOW UNITS NOT SHOWN. ROOF JOISTS AND GIRDERS SUPPORTING MECHANICAL UNITS SHALL BE DESIGNED FOR ADDITIONAL LOADS OF THE UNITS. COORDINATE WEIGHTS, SIZES AND LOCATIONS WITH MECHANICAL DRAWINGS. PROVIDE FRAMES PER DETAILS D4/S501 AND D5/S501 BELOW SIDES OF MECHANICAL UNITS.

PLAN NOTES - FLOOR/ROOF FRMG

3. PROVIDE 2x6 FLAT BLOCKING BETWEEN JOISTS AND IN LINE WITH SHEARWALL. PROVIDE CONTINOUS CS14 STRAP ATOP SHEATHING AND NAIL INTO BLOCKING.
4. PROVIDE 2x6 FLAT BLOCKING BENEATH SHEATHING IN LINE WITH SHEARWALL. WHERE BLOCKING IS SPLICED, SPLICE PER A5/S501.
5. PROVIDE PERMANENT BRACING OF JOISTS AT THIRD POINTS IN INTERIOR SPAN PER MANUFACTURERS REQUIREMENTS.
6. PROVIDE TRUSS BLOCKING BETWEEN TRUSSES AND IN LINE WITH SHEARWALL. TRUSS MANUFACTURER SHALL DESIGN TRUSS BLOCKING FOR 4000 LBF HORIZONTAL SEISMIC LOAD (ASD). PROVIDE (2) CS14 STRAPS CONTINUOUS, ONE TOP, ONE BOTTOM, NAILING INTO TRUSS BLOCKING TOP AND BOTTOM CHORDS.

PLAN NOTES - FLOOR/ROOF FRMG

7. SHEATH AND NAIL ALL EXTERIOR WALLS AS PER TYPE SHEARWALL CONSTRUCTION, TYP, UNO.
8. SHEATHING TYPES ARE TYPICAL ALONG A GRID LINE, UNO.
9. HU28 CONCEALED FLANGE HANGER.
10. HU28 SCREW INTO BLOCKING THROUGH SHEATHING.
11. PROVIDE CORRIDOR JOIST, 2x6 FLAT BLOCKING, OR BEAM IN LINE W/ SHEARWALL W/ SIMPSON CS20 COIL STRAP OVER MEMBER AND EXTENDING 12" MINIMUM ONTO SHEARWALL EACH END W/ FULL 10d NAILING.
12. PROVIDE CORRIDOR JOIST, 2x6 FLAT BLOCKING, OR BEAM IN LINE W/ SHEARWALL W/ SIMPSON CS14 COIL STRAP OVER MEMBER AND EXTENDING 12" MINIMUM ONTO SHEARWALL EACH END W/ FULL 10d NAILING.

PLAN NOTES - FLOOR/ROOF FRMG

13. DO NOT SPLICE DOUBLE TOP PLATE ALONG LENGTH.
14. PROVIDE UPSIDE DOWN SIMPSON HUC26-3 FOR BEAM TO WOOD COLUMN/BEAM CONNECTION.
15. TRUSS AND GIRDER TOP CHORDS ONLY (2x6 MAX DEPTH) TO CONTINUE OVER ELEVATOR SHAFT, SEE DETAIL B1/S502.
16. NON-STRUCTURAL ROOF BRACE. PLACE AFTER FULL ROOFING IS IN PLACE. SEE DETAIL C1/S502 & C2/S502.
17. LEAVE GYPCRETE TOPPING OUT OF BATHROOM AREAS SHOWN SHADED. PROVIDE 1 3/8" MAX GROUT BED FOR SHOWER & TILE. COORDINATE WITH ARCHITECT.

FLOOR/ROOF FRMG PLAN LEGEND

- xxx'-xx" — TOP OF FLOOR SHEATHING ELEVATION
- CHANGE IN ELEVATION OR STEP IN SLAB, SEE ARCH DWGS FOR EXACT LOCATION
- D# — WOOD SHEATHING, [D#], W/ SPAN DIRECTION INDICATED, SEE SCHEDULE **D1/S601** W/ 3/4" GYPCRETE TOPPING SLAB 110 PSF
- SITE WALL, COORD W/ ARCH / CIVIL DWGS
- SW-# — WOOD STUD SHEARWALL TYPE BELOW, [SW-#], SEE SCHEDULE **D4/S601**
- WOOD STUD BEARING WALL, SEE GENERAL NOTES
- HEADER IN WALL, SEE GENERAL NOTES
- WALL ABOVE BEAM
- HD-# — SHEARWALL HOLDOWN, [HD-#], SEE SCHEDULE **B2/S601**
- STEEL COLUMN: WIDE FLANGE, TUBE, PIPE
- KP — WOOD POST, KING POST (KP)
- BEAM FRAMING OVER COLUMN
- JOIST, TRUSS, RAFTER OR PURLIN

DEKOLD ARCHITECTURE INC.
104 E 600 S #540, Heber City, UT 84032
(208) 206-7338
www.behance.net/kevindekold
kevindekold@hotmail.com

PROFESSIONAL STRUCTURAL ENGINEER — SCOTT A. WILSON — #185894 — STATE OF UTAH — 5.17.25

Civil — CACHE LANDMARK — 95 W Golf Course Rd St. 101, Logan, UT 84321, (435)713-0099
Landscape — LDG — 326 W 200 S #102, Salt Lake City, UT 84101, (435)901-3127
Structural — CALDER RICHARDS — 1905 S Redwood Rd, St. 102, Salt Lake City, UT 84104, (801)466-1699
Mechanical — ROYAL — 1837 S E Bay Blvd Provo, UT 84606, (801)375-2228
Electrical — BNA CONSULTING — 4225 W Lake Park Blvd Sk. 275, West Valley City, UT 84121, (435)628-3670

AIS - WEST VALLEY

2574 S. REDWOOD ROAD
WEST VALLEY, UT 84119

REVISIONS:
1 2/27/25 BID
2 -
3 -

SHEET NUMBER:
S102
03/19/2025

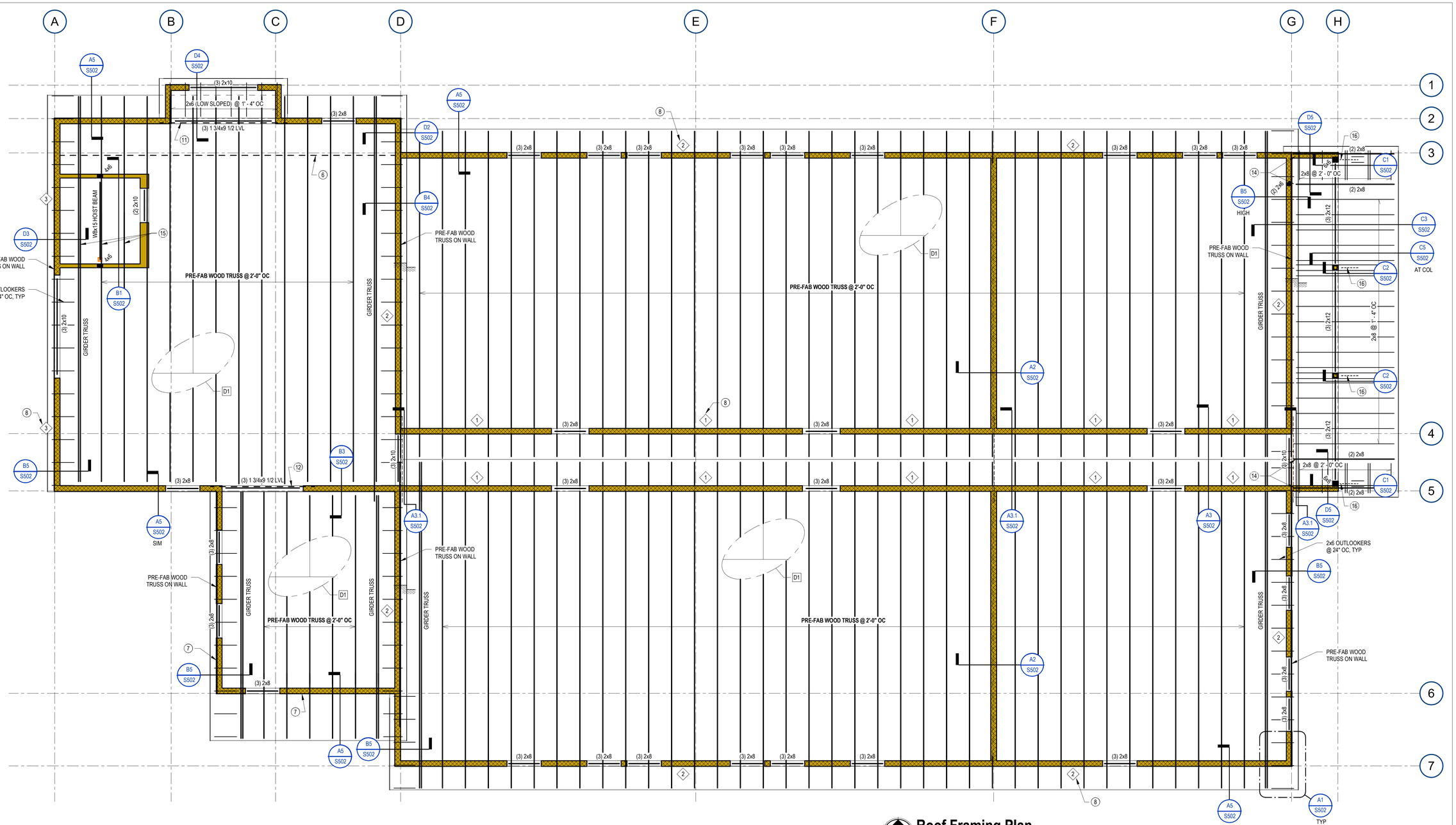

Roof Framing Plan

1/4" = 1'-0"

PLAN NOTES - FLOOR/ROOF FRMG

- # NUMBERED NOTES BELOW ARE KEYED ON PLAN.
- * SEE ARCHITECTURAL DRAWINGS FOR ALL DIMENSIONS, TYPICAL.
- ** NOT ALL NOTES MAY APPLY TO AREA SHOWN ON SHEET.
- A SEE STRUCTURAL NOTES ON SHEET S001 FOR ADDITIONAL INFORMATION.
- B TOP OF SHEATHING ELEVATION = xxx'-x", UNLESS NOTED THUS.
- C SEE ARCHITECTURAL DRAWINGS FOR TOP OF WALL ELEVATIONS.
- D ALL FLOOR HEADERS ARE (3) 2x8, UNO. ALL ROOF HEADERS ARE(3) 2x8, UNO.
- E SEE DETAIL A4/S501 FOR KING STUD AND TRIMMER STUD REQUIREMENTS AT WALL OPENINGS.
- F PROVIDE SIMPSON H2.5A HURRICANE TIES AT ALL JOIST AND TRUSS EXTERIOR BEARING CONDITIONS, TYP. SEE DETAIL A5/S502 FOR ADDITIONAL INFORMATION.
- G SEE ARCHITECTURAL DRAWINGS FOR DETAILED ELEVATIONS AND CONFIGURATIONS OF LANDINGS AND STAIRS. STAIR STRINGERS SHALL BE CUT FROM LVLs AS SHOWN IN DETAIL C3/S401.
- H ALL BEAMS AND HEADERS SHALL BEAR ON (2) 2x JACK STUDS (JS) AND HAVE (2) 2x KING STUDS (KS) AT EACH SUPPORT, UNO.
- J SEE C1/S501 FOR COLUMNS IN SHEARWALLS.
- K SE DETAIL A5/S501 FOR TYPICAL DOUBLE TOP PLATE SPLICE.

PLAN NOTES - FLOOR/ROOF FRMG

1. ELEVATOR RAIL SUPPORT COLUMNS SHOWN FOR BID PURPOSES ONLY. COORDINATE REQUIREMENTS WITH ELEVATOR MANUFACTURER / SUPPLIER. SEE DETAIL D4/S401 FOR TYPICAL FRAMING REQUIREMENTS.
2. MECHANICAL ROOFTOP UNIT (SHOWN SCHEMATICALLY ONLY). DUCT PENETRATIONS BELOW UNITS NOT SHOWN. ROOF JOISTS AND GIRDERS SUPPORTING MECHANICAL UNITS SHALL BE DESIGNED FOR ADDITIONAL LOADS OF THE UNITS. COORDINATE WEIGHTS, SIZES AND LOCATIONS WITH MECHANICAL DRAWINGS. PROVIDE FRAMES PER DETAILS D4/S501 AND D5/S501 BELOW SIDES OF MECHANICAL UNITS.

PLAN NOTES - FLOOR/ROOF FRMG

3. PROVIDE 2x6 FLAT BLOCKING BETWEEN JOISTS AND IN LINE WITH SHEARWALL. PROVIDE CONTINOUS CS14 STRAP ATOP SHEATHING AND NAIL INTO BLOCKING.
4. PROVIDE 2x6 FLAT BLOCKING BENEATH SHEATHING IN LINE WITH SHEARWALL WHERE BLOCKING IS SPLICED, SPLICE PER A5/S501.
5. PROVIDE PERMANENT BRACING OF JOISTS AT THIRD POINTS IN INTERIOR SPAN PER MANUFACTURERS REQUIREMENTS.
6. PROVIDE TRUSS BLOCKING BETWEEN TRUSSES AND IN LINE WITH SHEARWALL. TRUSS MANUFACTURER SHALL DESIGN TRUSS BLOCKING FOR 4000 LBF HORIZONTAL SEISMIC LOAD (ASD). PROVIDE (2) CS14 STRAPS CONTINUOUS, ONE TOP, ONE BOTTOM, NAILING INTO TRUSS BLOCKING TOP AND BOTTOM CHORDS.

PLAN NOTES - FLOOR/ROOF FRMG

7. SHEATH AND NAIL ALL EXTERIOR WALLS AS PER TYPE SHEARWALL CONSTRUCTION, TYP, UNO.
8. SHEATHING TYPES ARE TYPICAL ALONG A GRID LINE, UNO.
9. HU28 CONCEALED FLANGE HANGER.
10. HU28 SCREW INTO BLOCKING THROUGH SHEATHING.
11. PROVIDE CORRIDOR JOIST, 2x6 FLAT BLOCKING, OR BEAM IN LINE W/ SHEARWALL W/ SIMPSON CS20 COIL STRAP OVER MEMBER AND EXTENDING 12" MINIMUM ONTO SHEARWALL EACH END W/ FULL 10d NAILING.
12. PROVIDE CORRIDOR JOIST, 2x6 FLAT BLOCKING, OR BEAM IN LINE W/ SHEARWALL W/ SIMPSON CS14 COIL STRAP OVER MEMBER AND EXTENDING 12" MINIMUM ONTO SHEARWALL EACH END W/ FULL 10d NAILING.

PLAN NOTES - FLOOR/ROOF FRMG

13. DO NOT SPLICE DOUBLE TOP PLATE ALONG LENGTH.
14. PROVIDE UPSIDE DOWN SIMPSON HUC26-3 FOR BEAM TO WOOD COLUMN/BEAM CONNECTION.
15. TRUSS AND GIRDER TOP CHORDS ONLY (2x6 MAX DEPTH) TO CONTINUE OVER ELEVATOR SHAFT, SEE DETAIL B1/S502.
16. NON-STRUCTURAL ROOF BRACE. PLACE AFTER FULL ROOFING IS IN PLACE. SEE DETAIL C1/S502 & C2/S502.
17. LEAVE GYPCRETE TOPPING OUT OF BATHROOM AREAS SHOWN SHADED. PROVIDE 1 3/8" MAX GROUT BED FOR SHOWER & TILE. COORDINATE WITH ARCHITECT.

FLOOR/ROOF FRMG PLAN LEGEND

- xxx'-xx" — TOP OF FLOOR SHEATHING ELEVATION
- CHANGE IN ELEVATION OR STEP IN SLAB, SEE ARCH DWGS FOR EXACT LOCATION
- D# — WOOD SHEATHING, [D#], W/ SPAN DIRECTION INDICATED, SEE SCHEDULE **D1/S601** W/ 3/4" GYPCRETE TOPPING SLAB 110 PSF
- SITE WALL, COORD W/ ARCH / CIVIL DWGS
- SW-# — WOOD STUD SHEARWALL TYPE BELOW, [SW-#], SEE SCHEDULE **D4/S601**
- WOOD STUD BEARING WALL, SEE GENERAL NOTES
- HEADER IN WALL, SEE GENERAL NOTES
- WALL ABOVE BEAM
- HD-# — SHEARWALL HOLDOWN, [HD-#], SEE SCHEDULE **B2/S601**
- STEEL COLUMN: WIDE FLANGE, TUBE, PIPE
- KP — WOOD POST, KING POST (KP)
- BEAM FRAMING OVER COLUMN
- JOIST, TRUSS, RAFTER OR PURLIN

DEKOLD ARCHITECTURE INC.
104 E 600 S #540, Heber City, UT 84032
(208) 206-7338
www.behance.net/kevindekold
kevindekold@hotmail.com

PROFESSIONAL STRUCTURAL ENGINEER — SCOTT A. WILSON — #185894 — STATE OF UTAH — 3.17.25

Civil — CACHE LANDMARK — 95 W Golf Course Rd St. 101, Logan, UT 84321, (435)713-0099
Landscape — LDG — 326 W 200 S #102, Salt Lake City, UT 84101, (435)901-3127
Structural — CALDER RICHARDS — 1905 S Redwood Rd, St. 102, Salt Lake City, UT 84104, (801)466-1699
Mechanical — ROYAL — 1837 S E Bay Blvd, Provo, UT 84606, (801)375-2228
Electrical — BNA CONSULTING — 4225 W Lake Park Blvd St. 275, West Valley City, UT 84121, (435)628-3570

AIS - WEST VALLEY

2574 S. REDWOOD ROAD
WEST VALLEY, UT 84119

REVISIONS:

1	2/27/25	BID
2	-	
3	-	

SHEET NUMBER:

S103

03/19/2025

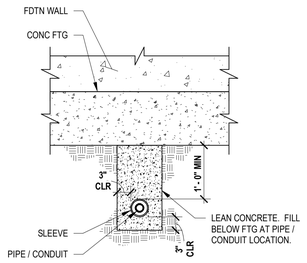

DEEP SINGLE PIPE / CONDUIT BELOW FTG

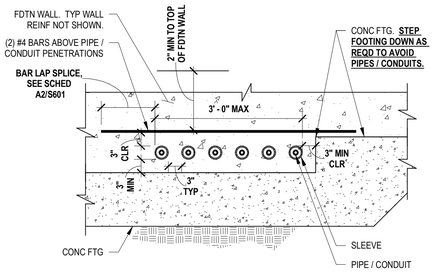

MULTIPLE PIPES / CONDUITS THRU FDTN WALL

NOTES:
1. **NO UTILITIES SHALL RUN THROUGH FOOTINGS.**
2. **NO UTILITIES SHALL RUN BELOW SPOT FOOTINGS.**
3. **SLEEVE INSIDE DIAMETER SHALL BE AT LEAST 1 1/2" GREATER THAN PIPE / CONDUIT OUTSIDE DIAMETER.**
4. **SINGLE PIPES MUST BE SPACED AT A MINIMUM OF 3'-0" OC.**

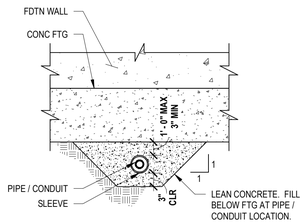

SHALLOW SINGLE PIPE / CONDUIT BELOW & NEAR BOTTOM OF FTG

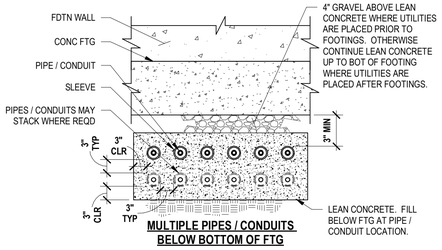

MULTIPLE PIPES / CONDUITS BELOW BOTTOM OF FTG

PLUMBING / CONDUIT PENETRATIONS NEAR FTGS

C1 3/4" = 1'-0" — 3117_02

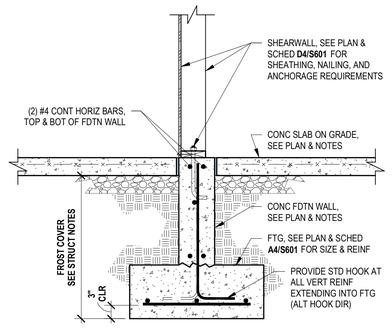

D3 - 3/4" = 1'-0" — 3162_04

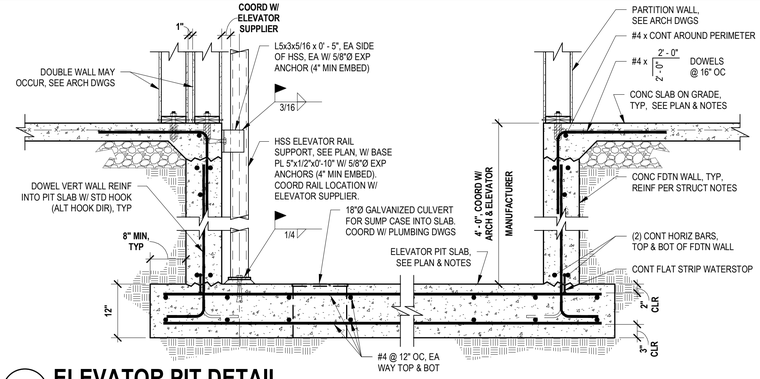

D4 **ELEVATOR PIT DETAIL** — 3/4" = 1'-0" — MPB1S300

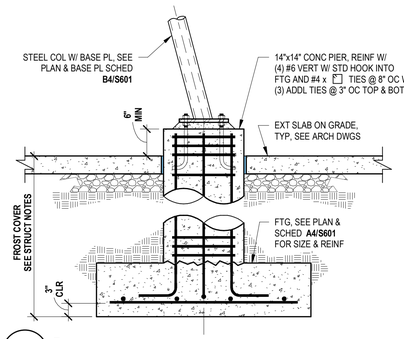

C4 - 3/4" = 1'-0" — 3143_06

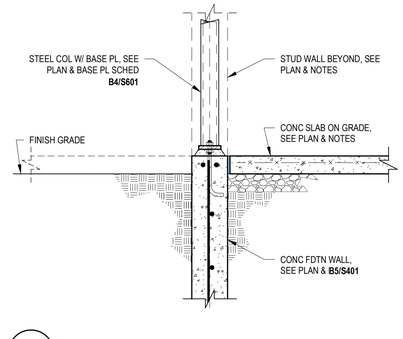

C5 - 3/4" = 1'-0" — 3243_02

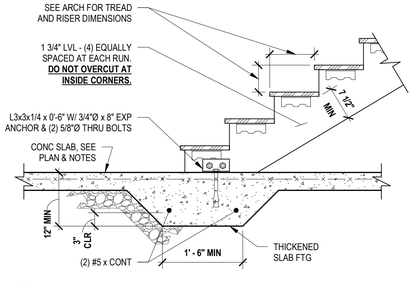

C3 - NO SCALE

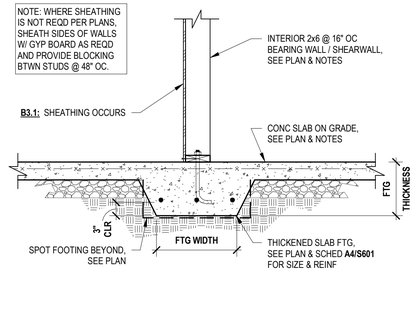

B3 B3.1 - 3/4" = 1'-0" — 3162_05

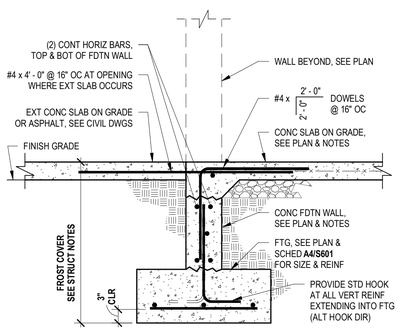

B4 **EXT DOOR OPENING DETAIL** — 3/4" = 1'-0" — 3136_03

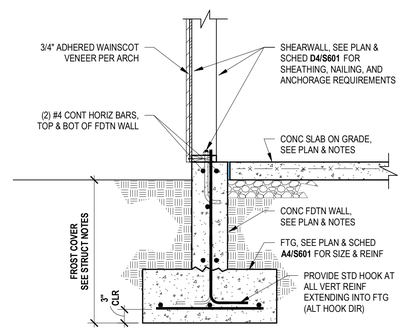

B5 - 3/4" = 1'-0" — 3162_04

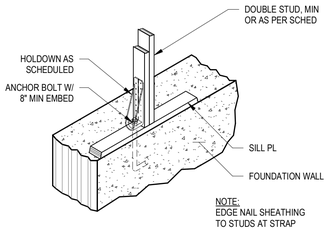

B1 - NO SCALE — MPC4S300

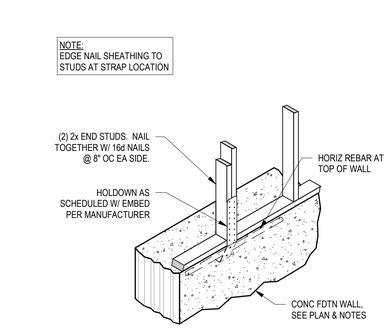

B2 - NO SCALE — 3262_01

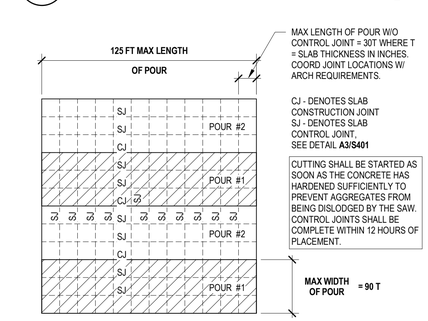

A2 **SLAB CONTROL JOINT CRITERIA** — NO SCALE — 3677_01

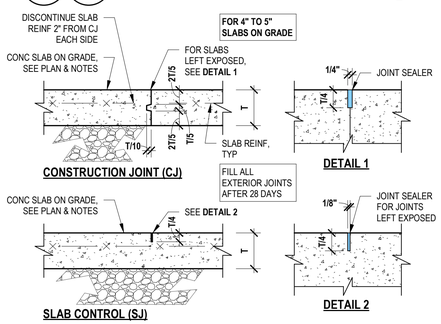

A3 **TYPICAL SLAB JOINT DETAILS** — NO SCALE — 3677_02

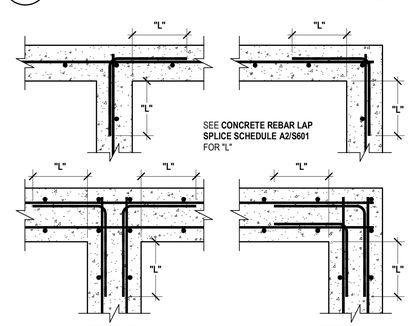

A4 **CONCRETE WALL DOWELS** — NO SCALE — 3232_01

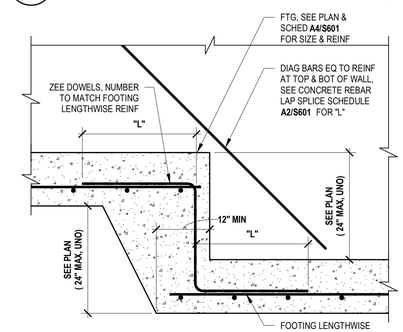

A5 **FOOTING STEP (CONC FDTN)** — NO SCALE — 3132_01

DEKOLD ARCHITECTURE INC.
104 E 600 S #540, Heber City, UT 84032
(208) 206-7338
www.behance.net/kevindekold
kevindekold@hotmail.com

Civil — CACHE LANDMARK — 95 W Golf Course Rd St. 101, Logan, UT 84321, (435)713-0099
Landscape — LDG — 326 W 200 S #102, Salt Lake City, UT 84101, (435)901-3127
Structural — CALDER RICHARDS — 1905 S Redwood Rd, St. 102, Salt Lake City, UT 84104, (801)466-1699
Mechanical — ROYAL — 1837 S E Bay Blvd, Provo, UT 84606, (801)375-2228
Electrical — BNA CONSULTING — 4225 W Lake Park Blvd St. 275, West Valley City, UT 84121, (435)628-3670

PROFESSIONAL STRUCTURAL ENGINEER — SCOTT A. WILSON — #10539044 — STATE OF UTAH — 5-12-25

AIS - WEST VALLEY
2574 S. REDWOOD ROAD
WEST VALLEY, UT 84119

REVISIONS:
1 2/27/25 BID
2 -
3 -

SHEET NUMBER:
S401
03/19/2025

3/18/2025 11:21:56 AM

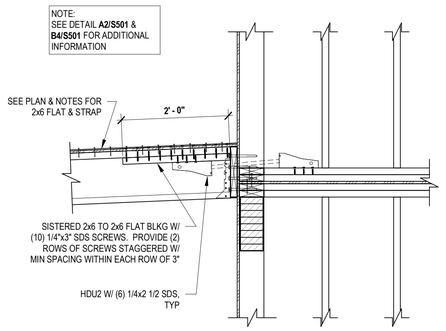

D1 3/4" = 1'-0" — 6265_12

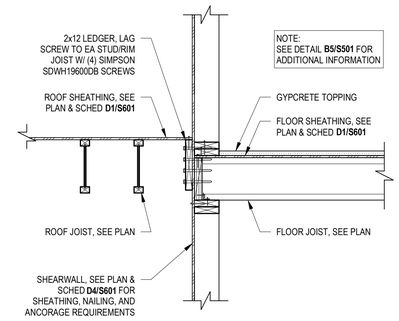

D2 3/4" = 1'-0"

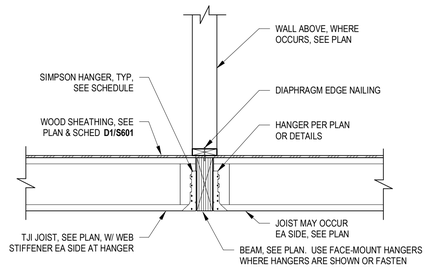

D3 3/4" = 1'-0" — 6464_02

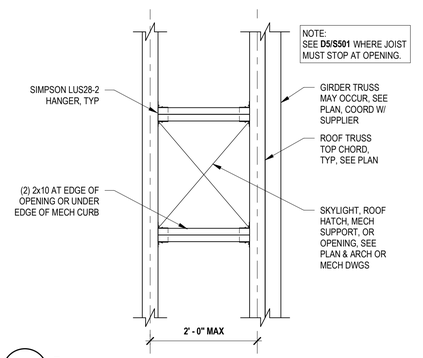

D4 3/4" = 1'-0"

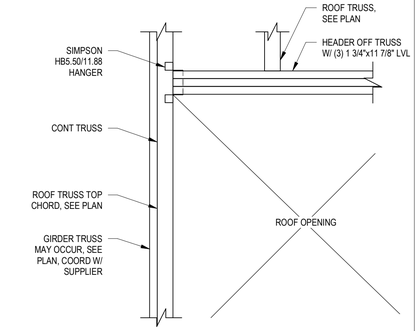

D5 3/4" = 1'-0"

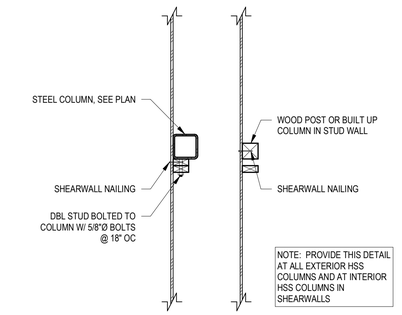

C1 3/4" = 1'-0" — 6362_01

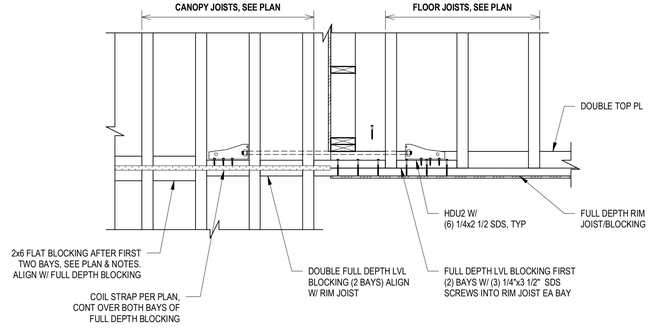

C2 3/4" = 1'-0"

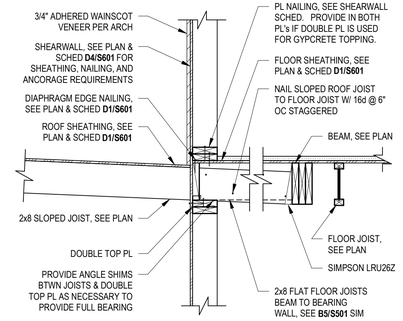

C4 3/4" = 1'-0" — 6265_08

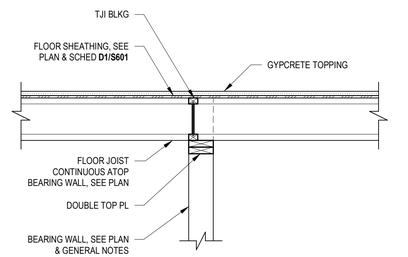

C5 3/4" = 1'-0" — 6265_12

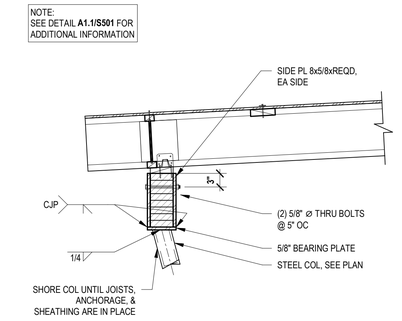

B1 3/4" = 1'-0" — 6265_14

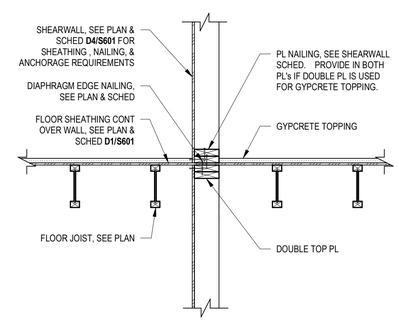

B2 3/4" = 1'-0" — 6265_12

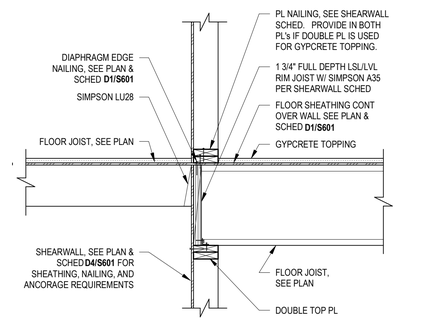

B3 3/4" = 1'-0" — 6265_08

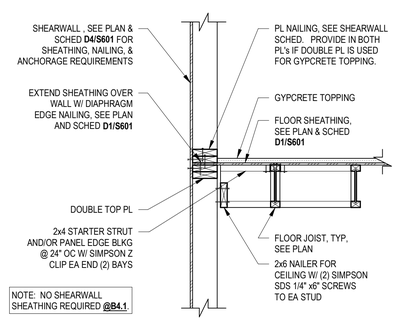

B4 B4.1 3/4" = 1'-0" — 6265_12

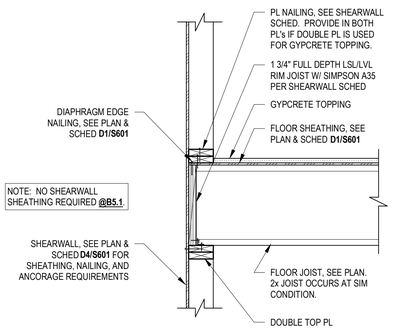

B5 B5.1 3/4" = 1'-0" — 6265_08

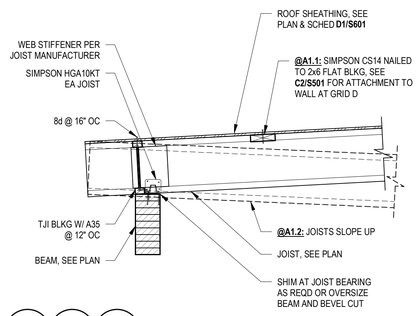

A1 A1.1 A1.2 3/4" = 1'-0" — 6265_14

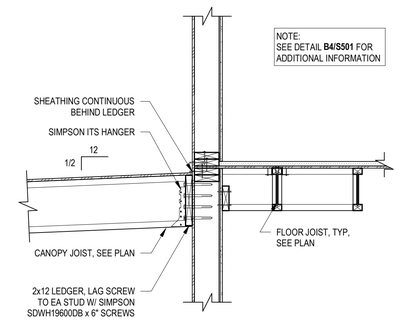

A2 3/4" = 1'-0" — 6265_12

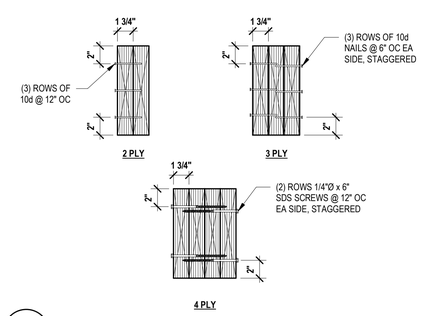

A3 1 1/2" = 1'-0" — 6464_03

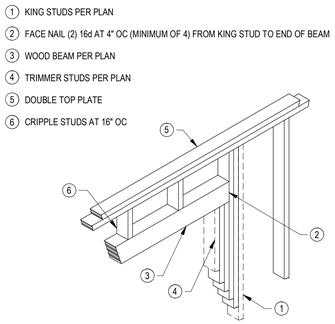

A4 NO SCALE — 6264_02

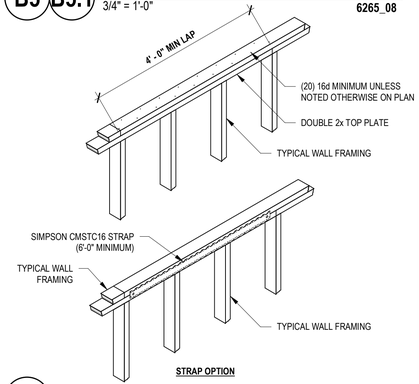

A5 NO SCALE — 6217_04

DEKOLD ARCHITECTURE INC.
104 E 600 S #540, Heber City, UT 84032
(208) 206-7338
www.behance.net/kevindekold
kevindekold@hotmail.com

PROFESSIONAL STRUCTURAL ENGINEER
SCOTT A. WILSON
#10539004
STATE OF UTAH
3-17-25

Civil — CACHE LANDMARK — 95 W Golf Course Rd St. 101, Logan, UT 84321, (435)713-0099
Landscape — LDG — 326 W 200 S #102, Salt Lake City, UT 84101, (435)901-3127
Structural — CALDER RICHARDS — 1905 S Redwood Rd, St. 102, Salt Lake City, UT 84104, (801)466-1099
Mechanical — ROYAL — 1837 S E Bay Blvd, Provo, UT 84606, (801)375-2228
Electrical — BNA CONSULTING — 4225 W Lake Park Blvd St. 275, West Valley City, UT 84121, (435)628-3670

AIS - WEST VALLEY
2574 S. REDWOOD ROAD
WEST VALLEY, UT 84119

REVISIONS:
1 2/27/25 BID
2 -
3 -

SHEET NUMBER:
S501
03/19/2025

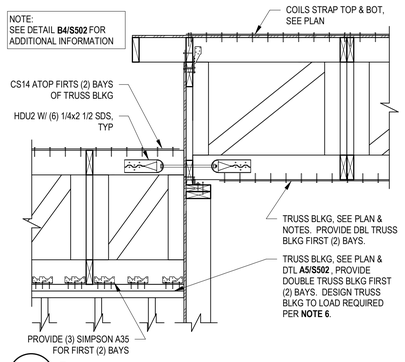

D2 - 3/4" = 1'-0"

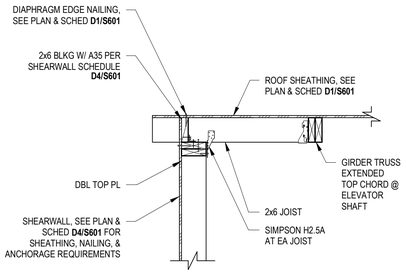

D3 - 3/4" = 1'-0"

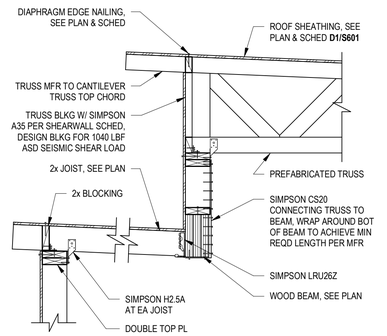

D4 - 3/4" = 1'-0"

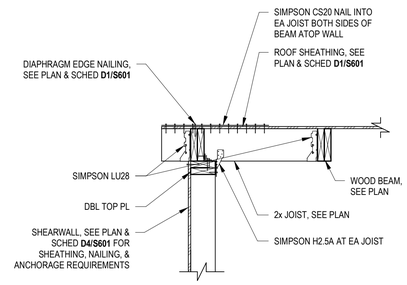

D5 - 3/4" = 1'-0"

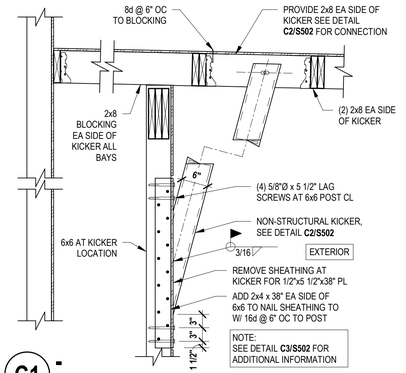

C1 - 3/4" = 1'-0"

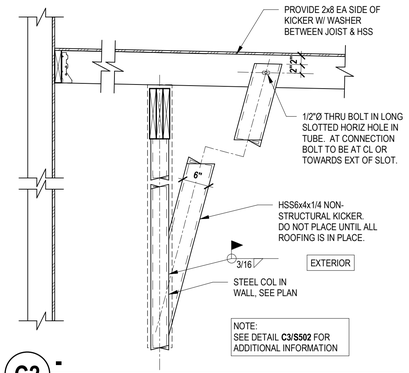

C2 - 3/4" = 1'-0"

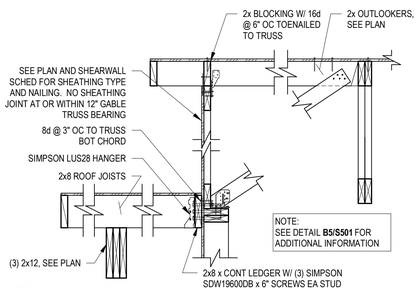

C3 - 3/4" = 1'-0"

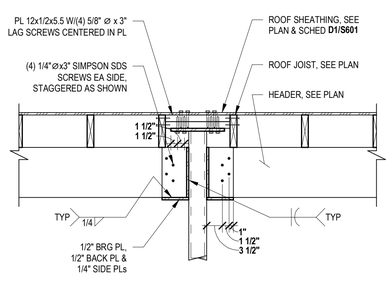

C4 - 3/4" = 1'-0"

6265_08

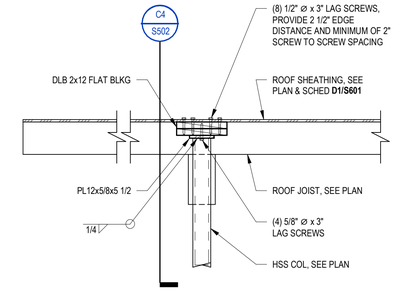

C5 - 3/4" = 1'-0"

6265_08

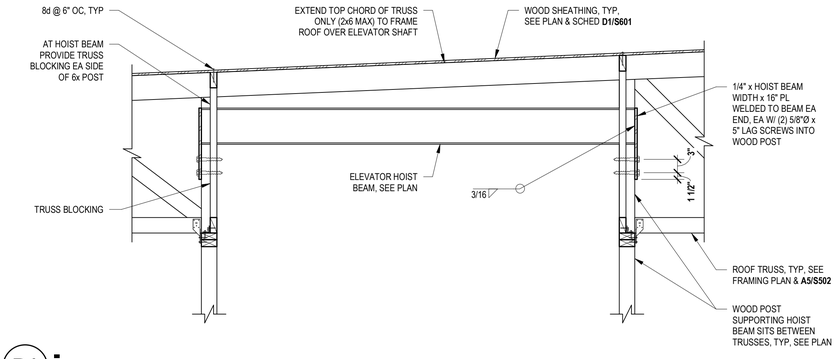

B1 - 3/4" = 1'-0"

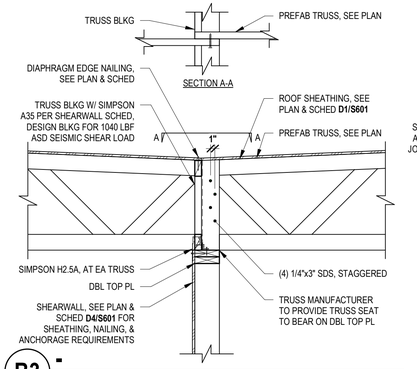

B3 - 3/4" = 1'-0"

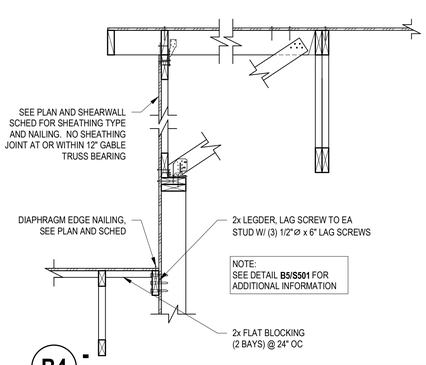

B4 - 3/4" = 1'-0"

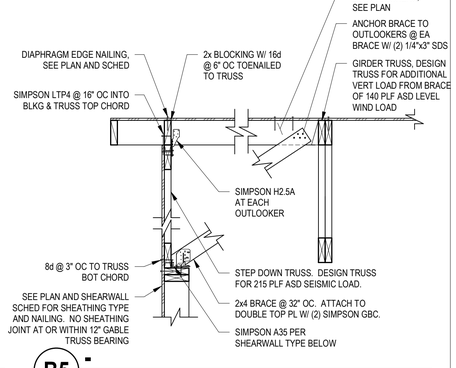

B5 - 3/4" = 1'-0"

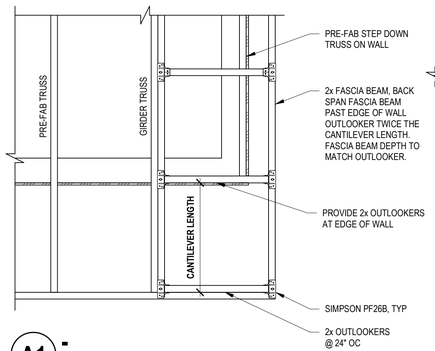

A1 - 3/4" = 1'-0"

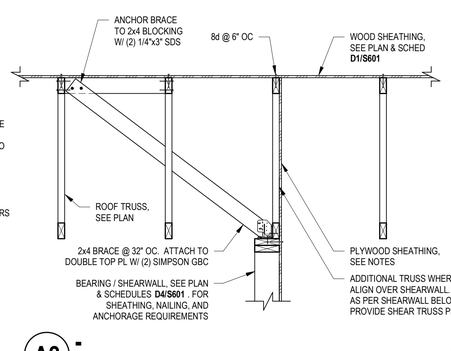

A2 - 3/4" = 1'-0"

MPD3S400

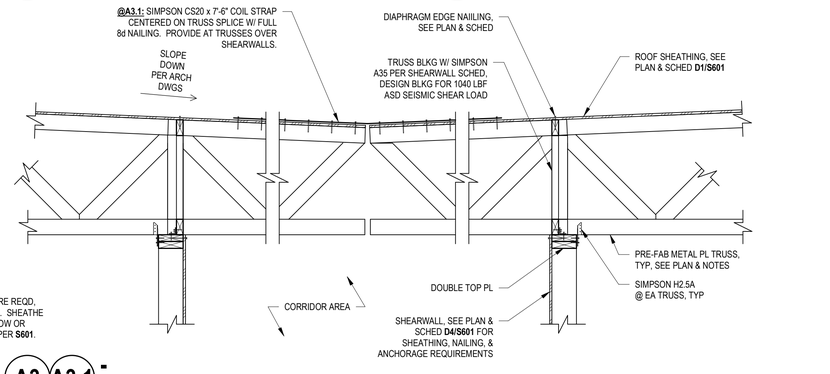

A3 A3.1 - 3/4" = 1'-0"

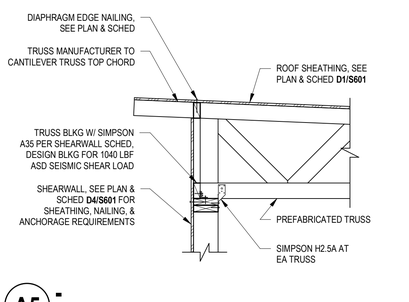

A5 - 3/4" = 1'-0"

MPA1S400

DEKOLD ARCHITECTURE INC.
104 E 600 S #540, Heber City, UT 84032
(208) 206-7338
www.behance.net/kevindekold
kevindekold@hotmail.com

PROFESSIONAL STRUCTURAL ENGINEER
SCOTT A. WILSON
#10539044
STATE OF UTAH
3-17-25

Civil — CACHE LANDMARK — 95 W Golf Course Rd St. 101, Logan, UT 84321 — (435)713-0099
Landscape — LDG — 326 W 200 S #102, Salt Lake City, UT 84101 — (435)901-3127
Structural — CALDER RICHARDS — 1905 S Redwood Rd, St. 102, Salt Lake City, UT 84104 — (801)466-1699
Mechanical — ROYAL — 1837 S E Bay Blvd, Provo, UT 84606 — (801)375-2228
Electrical — BNA CONSULTING — 4225 W Lake Park Blvd St. 275, West Valley City, UT 84121 — (435)628-3670

AIS - WEST VALLEY

2574 S. REDWOOD ROAD
WEST VALLEY, UT 84119

REVISIONS:
1 2/27/25 BID
2 -
3 -

SHEET NUMBER:
S502
03/19/2025

DIAPHRAGM ATTACHMENT SCHEDULE & LEGEND

TYPE MARK & LEGEND	SHEATHING THICKNESS	PANEL INDEX	BOND CLASSIFICATION	T & G	BLOCKING	NAILING			V all (PLF)	
						DIAPHRAGM BOUNDARIES & CONTINUOUS PANEL EDGES	OTHER PANEL EDGES	FIELD NAILING	SEISMIC	WIND
D1	15/32"	32/16	EXPOSURE 1	NOT REQD	NOT REQD	8d @ 6" OC	8d @ 6" OC	8d @ 12" OC	240/180	335/252
D2	23/32"	48/24	EXPOSURE 1	REQD	NOT REQD	10d @ 6" OC	10d @ 6" OC	10d @ 12" OC	285/214	400/300

NOTES:

1. ALL SHEATHING SHALL BE APA RATED SHEATHING.
2. MINIMUM 2x MEMBERS ARE REQUIRED FOR NAILED FACE AT SUPPORTED EDGES AND BOUNDARIES, UNLESS NOTED OTHERWISE.
3. 8d NAILS SHALL HAVE 0.131" WIRE DIAMETER, MINIMUM. 10d NAILS SHALL HAVE 0.148" WIRE DIAMETER, MINIMUM.
4. SHEAR VALUES ARE ASD AND ARE BASED ON SHEATHING INSTALLATION AS SHOWN IN THE DIAGRAM AT RIGHT.
5. PROVIDE 1/8" GAP AT ALL PANEL JOINTS FOR CONTROL OF EXPANSION.
6. PANELS SHALL NOT BE LESS THAN 4'-0" x 8'-0" EXCEPT AT BOUNDARIES AND CHANGES IN FRAMING WHERE MINIMUM DIMENSION SHALL BE 24", UNLESS ALL EDGES OF UNDERSIZED PANELS ARE SUPPORTED BY AND FASTENED TO FRAMING MEMBERS OR BLOCKING.

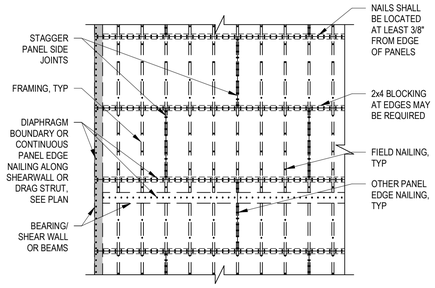

D1 WOOD DIAPHRAGM SCHEDULE

1/4" = 1'-0"

2024-09-04 - 6767_05

SCHEDULE - SHEARWALLS

Type	Sheathing	Panel Edge Nailing	Panel Field Nailing	Wall Sill Plate	Panel Edge Member	Anchor Bolts	Shear Transfer at Top Plate - Blkg	Shear Transfer at Bottom Plate	Adjoining 2x Panel Edge Member Connection	V all
SW-1	15/32"	8d @ 6" OC	8d @ 12" OC	2x	2x	5/8"Ø @ 48" OC	A35 @ 24" OC	16d @ 8" OC	(2) 10d @ 8" OC	260
SW-2	15/32"	8d @ 4" OC	8d @ 12" OC	2x	3x	5/8"Ø @ 32" OC	A35 @ 16" OC	16d @ 6" OC	(2) 10d @ 8" OC	380
SW-3	15/32"	8d @ 3" OC	8d @ 12" OC	2x	3x	5/8"Ø @ 32" OC	A35 @ 12" OC	16d @ 4" OC	(2) 10d @ 6" OC	490

NOTES:

1. ALL SHEATHING SHALL BE APA RATED SHEATHING.
2. ALL ADJOINING PANEL EDGES AT SHEARWALLS SHALL BE BACKED WITH 2" NOMINAL FRAMING, EXCEPT WHERE INDICATED TO BE 3x ON SCHEDULE. 3x MATERIAL MAY BE REPLACED WITH 4x MATERIAL. MULTIPLE LAYERS OF 2x FRAMING MAY BE USED WHERE 3x FRAMING IS INDICATED. ADJOINING 2x PANEL EDGE MEMBERS SHALL BE STITCHED TOGETHER AS INDICATED IN THE SCHEDULE. A PANEL EDGE MEMBER IS DEFINED AS ANY MEMBER WITH ADJOINING PANEL EDGES.
3. SILL PLATES IN CONTACT WITH CONCRETE SHALL BE PRESSURE TREATED, UNLESS NOTED OTHERWISE, WITH A MINIMUM OF (2) ANCHOR BOLTS PER PLATE. PLACE ONE ANCHOR BOLT WITHIN 12" FROM EACH END. ANCHOR BOLTS SHALL HAVE A 3"x3/16"x3" PL WASHER AND EMBED 6" MINIMUM INTO CONCRETE.
4. ALL FRAMING SHALL BE DOUGLAS-FIR SOUTH, STUD GRADE, MINIMUM. SEE STRUCTURAL NOTES FOR ADDITIONAL REQUIREMENTS.
5. ALL SHEARWALLS SHALL BE BLOCKED.
6. ALL HARDWARE SHALL BE "SIMPSON STRONG TIE" OR APPROVED EQUIVALENT.
7. 8d NAILS SHALL HAVE 0.131" WIRE DIAMETER, MINIMUM. 10d NAILS SHALL HAVE 0.148" WIRE DIAMETER, MINIMUM. 16d NAILS SHALL HAVE 0.162" WIRE DIAMETER.
8. WHEN A SHEARWALL IS INTERRUPTED BY OR ENDS WITH A STEEL COLUMN, THE COLUMN SHALL HAVE NAILERS THE SAME SIZE AS SCHEDULED PANEL EDGE MEMBERS AND WELDED THREADED STUDS OF THE SAME SIZE AND SPACING AS NOTED IN THE ANCHOR BOLT COLUMN OF THE SCHEDULE.
9. "SDS" DENOTES SIMPSON STRONG DRIVE HEAVY DUTY SCREWS. REQUIRES NO PREDRILLING.
10. SHEAR VALUES ARE BASED ON ASD SEISMIC PROVISIONS.
11. ALL EXTERIOR SHEARWALLS SHALL BE TYPE (1), UNO.
12. DO NOT SPLICE SHEARWALL SHEATHING WITHIN 4 FEET OF SILL PLATE.

D4 SHEARWALL SCHEDULE

3/4" = 1'-0"

2024-09-24 - 6762_01

SCHEDULE - BASE PLATES

Mark	Plate Detail	Plate Dimensions "t"	"a"	"b"	"c"	Anchor Bolts Number	Diameter	Embed "e"	Type	Grade	Grout Depth "h"	Notes
BP-1	B	3/4"	5 1/2"	10"	1 1/2"	(2)	5/8"	-	1	F1554 GR36	1 1/2"	
BP-2	A	3/4"	10"	10"	1 1/2"	(4)	3/4"	-	1	F1554 GR36	1 1/2"	

BASE PLATE NOTES:

1. ALL PLATES ARE A36 STEEL.
2. NON-SHRINK GROUT SHALL HAVE A MINIMUM ULTIMATE COMPRESSIVE STRENGTH OF 4,000 PSI.
3. ALL BOLTS SHALL BE THREADED FOR FULL HEIGHT ABOVE TOP OF CONCRETE AND HAVE DOUBLE NUTS WITH WASHERS.
4. CENTER ALL COLUMNS ON PLATES, UNO.
5. ALL COLUMNS SHALL BE WELDED TO BASE PLATES WITH FILLET WELDS, UNO. ALL FILLET WELDS SHALL BE AS PER AISC TABLE J2.4, 3/16" MINIMUM.
6. ALL ANCHOR BOLTS ARE 3/4"Ø, TYPE 1, UNO.
7. COLUMN SHAPES SHOWN ON DETAILS MAY NOT CORRESPOND WITH ACTUAL COLUMN SHAPE. SEE STRUCTURAL PLANS FOR COLUMN TYPE.
8. SEE PLAN AND DETAILS FOR SPECIAL BASE PLATE CONDITIONS, WHERE OCCUR.

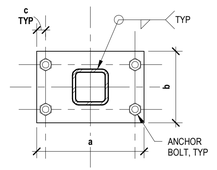

PLATE DETAIL A

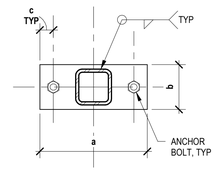

PLATE DETAIL B

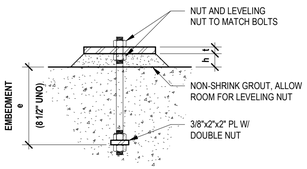

ANCHOR BOLT TYPE 1

NAILING SCHEDULE

Connection	Type of Nailing	Box Nails
Joist to Sill	Toe Nails	(2) 16d OR (3) 8d
Rafter to Plate	Toe Nails	(3) 8d
Bridging to Joist	Toe Nails	(2) 8d
Plate to Joist or Blocking	Face Nails	(3) 16d per 16"
Stud to Top Plate	End Nails	(2) 16d
Stud to Sole Plate	Toe Nails	(4) 8d OR (2) 16d End Nails
Top Plates	Spike Together	16d @ 12" OC
Top Plates	At Intersections	(2) 16d
Top Plates	At Splices	(16) 16d, Each Side
Ceiling Joists to Plate	Toe Nails	(2) 16d OR (3) 8d
Ceiling Joist Laps over Partitions	Face Nails	(3) 16d
Cont 1x4 Brace to Stud	Face Nails	(2) 8d
Double Joists 10" Deep or Less	Spike Together	16d @ 6" OC, Staggered
Double Joists Deeper than 10"	Bolt Together	1/2"Ø Bolts @ 24" OC, Staggered
(2) 2x4 Col	Face Nails	10d - See Figure 1
(3) 2x4 Col	Face Nails	30d - See Figure 1
(2) 2x6 Col	Face Nails	10d - See Figure 2
(3) 2x6 Col	Face Nails	30d - See Figure 2

SCHEDULE - WALL HOLDDOWNS

Mark	Size	Edge Member	Base Anchor	Edge Member Attachment	Notes
HD-1	CS14	(2) 2x6	-	(36) 0.31x2 1/2" NAILS	-
HD-2	STHD14	(2) 2x6	-	(24) 0.148x3 1/4" NAILS	SEE B2/S401
HD-3	HDU2	(2) 2x6	SSTB16	(6) 1/4x2 1/2 SDS	SEE B1/S401
HD-4	HDU8	(2) 2x6	PAB7	(20) 1/4x2 1/2 SDS	SEE B1/S401

NOTES:

1. ALL ANCHORS ARE SIMPSON STRONG-TIE.
2. INSTALLATION OF ALL HOLDOWN ANCHORS AND STRAPS SHALL BE PER MFR'S RECOMMENDATIONS AND SPECIFICATIONS.
3. ANCHOR BOLTS SHALL BE A307 WITH A 4 BAR DIA HOOK. PROVIDE 12" EMBED IN TOP OF FDTN AND 9" EMBED WHEN CAST INTO FOOTINGS.
4. PROVIDE SHEARWALL EDGE NAILING ALONG STUDS CONNECTED TO HOLDOWN ANCHORS AND STRAPS.
5. ANY HOLDOWN MAY BE REPLACED BY A HIGHER NUMBERED HOLDOWN. EXAMPLE: HD-2 MAY BE REPLACED BY AN HD-4.
6. HOOK OF ANCHOR BOLTS SHALL BE PLACED BELOW WALL TOP STEEL.

B2 HOLDOWN SCHEDULE

NO SCALE

6762_06

NAIL SIZE (COMMON NAIL, TYP)

Penny Weight	Wire Ø	Minimum Penetration
6d	0.113"	1.63"
8d	0.131"	1.57"
10d	0.148"	1.78"
12d	0.148"	1.78"
16d	0.162"	1.94"
20d	0.192"	2.30"
30d	0.207"	2.48"
40d	0.225"	2.70"

NOTES:
1. ALL NAILS SHALL BE COMMON NAILS UNLESS NOTED OTHERWISE.
2. WHERE MINIMUM PENETRATION EXCEEDS MEMBER DEPTH, NAIL SHALL FULLY PENETRATE MEMBER.
3. SUBSTITUTION OF STAPLES FOR NAILS IS NOT ALLOWED UNLESS APPROVED BY ENGINEERED.

NOTE:
ATTACH PLYWOOD SHEARWALL SHEATHING WITH 8d COMMON NAILS @ 12" OC TO EACH STUD MINIMUM, OR PROVIDE SCHEDULED FACE NAILING.

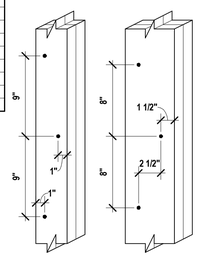

FIGURE 1

FIGURE 2

SCHEDULE - REINFORCING SPLICE LAP LENGTHS - f'c 3000 - 5000 PSI

Bar Size	f'c = 3000psi				f'c = 4000psi				f'c = 5000psi			
	Regular		Top		Regular		Top		Regular		Top	
	Class A	Class B	Class A	Class B	Class A	Class B	Class A	Class B	Class A	Class B	Class A	Class B
#3	17"	22"	22"	28"	15"	19"	19"	24"	13"	17"	17"	22"
#4	22"	29"	29"	38"	18"	25"	26"	33"	17"	22"	23"	30"
#5	28"	36"	37"	48"	24"	31"	32"	42"	21"	28"	24"	37"
#6	33"	43"	45"	58"	29"	37"	39"	50"	26"	33"	35"	45"
#7	48"	63"	63"	82"	42"	55"	55"	71"	37"	48"	48"	62"
#8	55"	72"	72"	93"	48"	63"	63"	81"	42"	55"	55"	71"
#9	62"	81"	81"	105"	54"	71"	71"	92"	48"	62"	62"	80"
#10	70"	91"	91"	118"	61"	79"	79"	103"	54"	70"	70"	90"
#11	78"	101"	101"	131"	68"	88"	88"	114"	60"	77"	77"	100"

NOTES:

1. THE SCHEDULE SHOWN APPLIES TO REGULAR WEIGHT CONCRETE WITH 60ksi GRADE REINFORCING BARS.
2. TOP BARS ARE HORIZONTAL BARS WITH 12" OR MORE OF FRESH CONCRETE CAST BELOW THE BARS.
3. CLASS "A" SPLICES SHALL BE USED WHEN 50% (OR LESS) OF BARS SPLICED WITHIN LAP.
4. CLASS "B" SPLICES SHALL BE USED FOR ALL ELSE, TYPICALLY WITH SHEARWALLS, COLUMNS, BEAMS AND SLABS.
5. FOR EPOXY COATED BARS, INCREASE LAP LENGTHS AS FOLLOWS:
   TOP BARS: Ld x 1.7
   REGULAR BARS: Ld x 1.5
6. FOR BUNDLED BARS, INCREASE LAP LENGTHS AS FOLLOWS:
   BUNDLED BARS, THREE OR LESS: Ld x 1.2
   BUNDLED BARS, FOUR OR MORE: Ld x 1.33
   INDIVIDUAL BAR SPLICES WITHIN A BUNDLE SHALL NOT OVERLAP.
7. LAP SPLICES ARE NOT ALLOWED FOR TIES AND STIRRUPS.

B4 BASE PL SCHEDULE

NO SCALE

4743_01

SCHEDULE - FOOTINGS

Mark	Width	Length	Thickness	Crosswise Reinforcing	Crosswise Spacing	Lengthwise Reinforcing	Lengthwise Spacing	Notes
FC1.5	1' - 6"	Cont	12"	-	-	(2) #4 x Cont	EQ	
FC2.0	2' - 0"	Cont	12"	-	-	(3) #4 x Cont	EQ	
FC3.0	3' - 0"	Cont	12"	-	-	(5) #4 x Cont	EQ	
FS4.0	4' - 0"	4' - 0"	12"	(4) #5 x 3' - 6"	EQ	(4) #5 x 3' - 6"	EQ	TOP & BOT

FOOTING NOTES:

1. WHERE CROSSWISE REINFORCING IS SPECIFIED, PLACE CROSSWISE REINFORCING 3" CLEAR FROM GRADE AND LENGTHWISE REINFORCING ON TOP OF CROSSWISE REINFORCING.
2. WHERE TOP REINFORCING IS INDICATED, PLACE TOP CROSSWISE REINFORCING 2" CLEAR FROM TOP OF FOOTING AND LENGTHWISE REINFORCING UNDER CROSSWISE REINFORCING.
3. ALL CONTINUOUS FOOTINGS SHALL BE FC2.0, AND SQUARE FOOTINGS SHALL BE FS4.0, MINIMUM, UNLESS NOTED OTHERWISE ON PLANS.

A4 FOOTING SCHEDULE

NO SCALE

3731_01

A1 -

NO SCALE

6767_01

A2 -

NO SCALE

3747_01

DEKOLD ARCHITECTURE INC.
104 E 600 S #540, Heber City, UT 84032
(208) 206-7338
www.behance.net/kevindekold
kevindekold@hotmail.com

PROFESSIONAL STRUCTURAL ENGINEER
SCOTT A. WILSON
#185894
STATE OF UTAH
3/19/25

Civil — CACHE LANDMARK — 95 W Golf Course Rd St. 101, Logan, UT 84321, (435)713-0099
Landscape — LDG — 326 W 200 S #102, Salt Lake City, UT 84101, (435)901-3127
Structural — CALDER RICHARDS — 1905 S Redwood Rd, St. 102, Salt Lake City, UT 84104, (801)466-1699
Mechanical — ROYAL — 1837 S E Bay Blvd, Provo, UT 84606, (801)375-2228
Electrical — BNA CONSULTING — 4225 W Lake Park Blvd St. 275, West Valley City, UT 84121, (435)628-3670

AIS - WEST VALLEY
2574 S. REDWOOD ROAD
WEST VALLEY, UT 84119

REVISIONS:
1 2/27/25 BID
2 -
3 -

SHEET NUMBER:
S601
03/19/2025

MECHANICAL SYMBOLS

NOTES:
1. ALL SYMBOLS MAY NOT BE USED.
2. DOTTED SYMBOLS INDICATE EXISTING EQUIPMENT, ETC

SYMBOL	EXPLANATION
ø	ROUND MEASUREMENT
	RETURN AIR GRILLE/DUCT
	SUPPLY AIR DIFFUSER/DUCT
	EXHAUST AIR INTAKE GRILLE
	EXHAUST FAN
T X–X	THERMOSTAT/SENSOR
S X–X	SENSOR
X	MECHANICAL EQUIPMENT SYMBOL
X	KEYED NOTE REFERENCE
NECK / CFM — SIZE / CFM — TAG	NECK: NECK AND BRANCH DUCT SIZE. CFM: CFM OF DIFFUSER OR GRILLE. TAG: DIFFUSER OR GRILLE CALL–OUT.
	SUPPLY AIR DUCTWORK
	RETURN AIR DUCTWORK
	EXHAUST AIR DUCTWORK
	OUTSIDE AIR DUCTWORK
R/D	RADIATION DAMPER
F/S	FIRE/SMOKE DAMPER
	BALANCING DAMPER

SITE CONDITIONS

SITE:

CITY: WEST VALLEY CITY, UT
ELEVATION: 4,250'

OUTDOOR CONDITIONS:

WINTER: HTG: 3° F
SUMMER: CLG: 98° F

INDOOR CONDITIONS

WINTER: HTG: 75° F
SUMMER: CLG: 72° F

IF TEMPERATURES SHOWN DO NOT MATCH CONDITIONS DESIRED FOR THIS PROJECT CONTACT THE ENGINEER OF RECORD.

DESIGN CONTACTS

PROJECT MANAGER	SAMANTHA KOEPP
MECHANICAL ENGINEER:	MARK MAKIN
PLUMBING DESIGNER:	MICHAEL CHRISTENSEN/ PRESTON MCCONKEY

MECHANICAL SHEET INDEX

SHEET NUMBER	SHEET TITLE
M–0.1	MECHANICAL NOTES & LEGENDS
M–1.1	MAIN LEVEL MECHANICAL PLAN
M–1.2	SECOND LEVEL MECHANICAL PLAN
M–4.1	ENLARGED 1 BEDROOM MECHANICAL PLAN
M–5.1	MECHANICAL DETAILS
M–5.2	MECHANICAL DETAILS
M–6.1	MECHANICAL SCHEDULES
M–7.1	MECHANICAL COMCHECK
M–7.2	MECHANICAL COMCHECK

APPLICABLE CODES

- 2021 INTERNATIONAL MECHANICAL CODE (IMC)
- 2021 INTERNATIONAL BUILDING CODE (IBC)
- 2021 INTERNATIONAL ENERGY CONSERVATION CODE (IECC)
- 2021 INTERNATIONAL PLUMBING CODE (IPC)
- 2021 INTERNATIONAL FUEL GAS CODE (IFGC)
- ASHRAE 90.1 – 2022

NOTE: CURRENT CODES ADOPTED BY THE RESPECTIVE JURISDICTION WILL SUPERCEDE THIS LIST OF CODES.

COMMISSIONING NOTES:

MECHANICAL CONTRACTOR SHALL BE RESPONSIBLE TO PROVIDE ALL DOCUMENTATION TO THE OWNER AS PER THE LISTED 2021 IECC CODE REFERENCES BELOW:

C408.2.1 A COMMISSIONING PLAN SHALL BE DEVELOPED BY A REGISTERED DESIGN PROFESSIONAL OR APPROVED AGENCY AND SHALL INCLUDE THE FOLLOWING ITEMS:

1. A NARRATIVE DESCRIPTION OF THE ACTIVITIES THAT WILL BE ACCOMPLISHED DURING EACH PHASE OF COMMISSIONING, INCLUDING THE PERSONNEL INTENDED TO ACCOMPLISH EACH OF THE ACTIVITIES.
2. A LISTING OF THE SPECIFIC EQUIPMENT, APPLIANCES OR SYSTEMS TO BE TESTED AND A DESCRIPTION OF THE TESTS TO BE PERFORMED.
3. FUNCTIONS TO BE TESTED, INCLUDING, BUT NOT LIMITED TO CALIBRATIONS AND ECONOMIZER CONTROLS.
4. CONDITIONS UNDER WHICH THE TESTS WILL BE PERFORMED. AT A MINIMUM, TESTING SHALL AFFIRM WINTER AND SUMMER DESIGN CONDITIONS AND FULL OUTSIDE AIR CONDITIONS.
5. MEASURABLE CRITERIA FOR PERFORMANCE.

C408.2.4 PRELIMINARY COMMISSIONING REPORT. A PRELIMINARY REPORT OF COMMISSIONING TEST PROCEDURES AND RESULTS SHALL BE COMPLETED AND CERTIFIED BY THE REGISTERED DESIGN PROFESSIONAL OR APPROVED AGENCY AND PROVIDED TO THE BUILDING OWNER OR OWNER'S AUTHORIZED AGENT. THE REPORT SHALL BE ORGANIZED WITH MECHANICAL AND SERVICE HOT WATER FINDINGS IN SEPARATE SECTIONS TO ALLOW INDEPENDENT REVIEW. THE REPORT SHALL BE IDENTIFIED AS "PRELIMINARY COMMISSIONING REPORT," SHALL INCLUDE THE COMPLETED COMMISSIONING COMPLIANCE CHECKLIST, FIGURE C408.2.4, AND SHALL IDENTIFY:

1. ITEMIZATION OF DEFICIENCIES FOUND DURING TESTING REQUIRED BY THIS SECTION THAT HAVE NOT BEEN CORRECTED AT THE TIME OF REPORT PREPARATION.
2. DEFERRED TESTS THAT CANNOT BE PERFORMED AT THE TIME OF REPORT PREPARATION BECAUSE OF CLIMATIC CONDITIONS.
3. CLIMATIC CONDITIONS REQUIRED FOR PERFORMANCE OF THE DEFERRED TESTS.
4. RESULTS OF FUNCTIONAL PERFORMANCE TESTS.
5. FUNCTIONAL PERFORMANCE TEST PROCEDURES USED DURING THE COMMISSIONING PROCESS, INCLUDING MEASURABLE CRITERIA FOR TEST ACCEPTANCE.

C408.2.4.1 ACCEPTANCE OF REPORT. BUILDINGS, OR PORTIONS THEREOF, SHALL NOT BE CONSIDERED AS ACCEPTABLE FOR A FINAL INSPECTION PURSUANT TO SECTION C105.2.6 UNTIL THE CODE OFFICIAL HAS RECEIVED THE PRELIMINARY COMMISSIONING REPORT FROM THE BUILDING OWNER OR OWNER'S AUTHORIZED AGENT.

C408.2.4.2 THE CODE OFFICIAL SHALL BE PERMITTED TO REQUIRE THAT A COPY OF THE PRELIMINARY COMMISSIONING REPORT BE MADE AVAILABLE FOR REVIEW BY THE CODE OFFICIAL.

C408.2.5 DOCUMENTATION REQUIREMENTS. THE CONSTRUCTION DOCUMENTS SHALL SPECIFY THAT THE DOCUMENTS DESCRIBED IN THIS SECTION BE PROVIDED TO THE BUILDING OWNER WITHIN 90 DAYS OF THE RECEIPT OF THE CERTIFICATE OF OCCUPANCY.

DOCUMENTS SHALL INCLUDED BUT ARE NOT LIMITED TO: DRAWINGS, MANUALS, SYSTEM BALANCING REPORT, AND FINAL COMMISSIONING REPORT.

DUCTWORK SEISMIC SUPPORT NOTES:

1. PER ASCE STANDARD 7–22 (OR MOST RECENT VERSION) SEISMIC SUPPORTS ARE NOT REQUIRED FOR THE FOLLOWING CONDITIONS:
   - 1.1. HVAC DUCTS ARE SUSPENDED WITH HANGERS 12" OR LESS IN LENGTH.
   - 1.2. HVAC DUCTS HAVE A CROSS–SECTIONAL AREA OF LESS THAN 6 SQUARE FEET.
2. IF INSTANCES OCCUR WHERE HVAC DUCT IS SUSPENDED WITH HANGERS GREATER THAN 12" IN LENGTH AND HVAC DUCT HAS A CROSS–SECTIONAL AREA GREATER THAN 6 SQUARE FEET SYSTEM CONNECTORS AND COMPONENTS SHALL BE COMPATIBLE AND DESIGNED FOR THE APPLICATION THAT THEY ARE USED FOR. SHALL HAVE A MINIMUM OF TWO TRANSVERSE BRACES PER STRAIGHT DUCT RUN WITH A MAXIMUM DISTANCE OF 30' BETWEEN TRANSVERSE BRACES. SHALL HAVE A MINIMUM OF ONE LONGITUDINAL BRACE PER STRAIGHT DUCT RUN WITH A MAXIMUM DISTANCE OF 40' BETWEEN LONGITUDINAL BRACES. BRACING SHALL ONLY OCCUR AT OR NEAR AREAS WHERE SUFFICIENT DUCT STIFFNESS IS PRESENT (AT OR NEAR JOINT CONNECTIONS).
3. FOR SEISMIC BRACING OF MECHANICAL EQUIPMENT AN INDEPENDENT SEISMIC AND VIBRATION CONTROL SUBCONTRACTOR WITH EXPERIENCE, COMPUTING CAPABILITIES, AND MANUFACTURED PRODUCTS SHALL BE FURNISHED BY MECHANICAL CONTRACTOR. INDEPENDENT SEISMIC CONSULTANT SHALL PROVIDE REQUIRED COMPUTATIONS, SHOP DRAWINGS, AND MANUFACTURED PRODUCTS TO MEET THE MINIMUM REQUIREMENTS OF ASCE 7–22 AND INTERNATIONAL BUILDING CODES (LATEST ADOPTED EDITION) FOR THE RESPECTIVE SEISMIC DESIGN FOR SEISMIC ZONE WITH IMPORTANCE FACTOR 1.5. SEISMIC SUBCONTRACTOR SHALL EXERCISE THE QUALITY CONTROL FOR THIS WORK AND SHALL NOT BE LIMITED TO INSTRUCTIONS DIRECTED TO THE MECHANICAL CONTRACTOR. THE SEISMIC SUBCONTRACTOR SHALL CERTIFY IN WRITING THAT THEY HAVE INSPECTED THE INSTALLATION AND THAT ALL ISOLATION ANCHORS AND SEISMIC RESTRAINT MATERIALS ARE INSTALLED CORRECTLY AND FUNCTIONING PROPERLY. CERTIFICATION SHALL BE PROVIDED AFTER ALL CORRECTIVE WORK HAS BEEN COMPLETED.

SUBMITTALS:

1. CONTRACTOR TO ALLOW 10 WORKING DAYS FOR SUBMITTAL TURNAROUND.
2. CONTRACTOR TO PROVIDE SUBMITTALS FOR ALL EQUIPMENT AND MATERIALS IN A SINGLE PACKAGE. PIECEMEAL SUBMITTALS WILL BE RETURNED WITH A NOTE TO REVISE AND RESUBMIT.
3. SUBMITTALS WILL BE CHECKED FOR COMPLIANCE WITH CAPACITY REQUIREMENTS AND ELECTRICAL REQUIREMENTS. CONTRACTOR TO VERIFY THAT WEIGHTS, DIMENSIONS, AND DUCT CONNECTIONS ON SUBMITTED EQUIPMENT IS CONSISTENT WITH SCHEDULED EQUIPMENT PRIOR TO SUBMITTAL. CHANGES IN SCOPE BROUGHT ABOUT BY SUBMITTED EQUIPMENT THAT DOES NOT COMPLY WITH THE WEIGHTS, DIMENSIONS, OR CONNECTION LOCATIONS ON SCHEDULED EQUIPMENT SHALL BE THE SOLE RESPONSIBILITY OF THE CONTRACTOR.

PROJECT MECHANICAL NOTES:

1. MECHANICAL CONTRACTOR TO PROVIDE AND INSTALL A 7–DAY PROGRAMMABLE THERMOSTAT FOR EACH FURNACE. VERIFY THERMOSTAT LOCATION WITH OWNER REPRESENTATIVE IN FIELD. INSTALL THERMOSTAT AT 48" A.F.F.. PROVIDE AND INSTALL A HEAVY DUTY VANDAL RESISTANT COVER IN ALL COMMON AREAS.
2. COORDINATE EXACT LOCATION OF ALL MECHANICAL UNITS WITH GENERAL CONTRACTOR. VERIFY IN FIELD.
3. PROVIDE AND INSTALL OUTSIDE AIR SYSTEM AS SPECIFIED ON THE PLANS. SEE TYPICAL OUTSIDE AIR DETAIL FOR FURNACES.
4. PROVIDE AND INSTALL ALL NECESSARY COMPONENTS FOR FURNACE/CONDENSING UNIT SYSTEMS. (IE REFRIGERANT LINES, COMBUSTION AIR PIPING, EXHAUST PIPING, CONCENTRIC TERMINATION KIT). ALL PER MANUFACTURERS RECOMMENDATIONS.
5. PROVIDE AND INSTALL MANUAL CONTROL DAMPERS AT EACH BRANCH TAKE–OFF. EACH SUPPLY AIR GRILLE SHALL BE DOWNSTREAM FROM A CONTROL DAMPER FOR BALANCING AND ADJUSTMENT. SOME INSTALLATIONS MAY REQUIRE OPPOSED BLADE DAMPERS OR CONCEALED DAMPER REGULATORS THAT ARE REMOTELY ADJUSTED. (COMMON AREAS)
6. PROVIDE AND INSTALL MANUAL BALANCING GRILLES AT EACH SUPPLY AIR TERMINATION FOR SEASONAL BALANCING AND ADJUSTMENT. SOME INSTALLATIONS MAY REQUIRE OPPOSED BLADE DAMPERS OR CONCEALED DAMPER REGULATORS THAT ARE REMOTELY ADJUSTED. (RESIDENTIAL AREAS)
7. SIZING FOR EQUIPMENT COMBUSTION AIR AND VENT PIPING DETERMINED USING MANUFACTURERS SPECIFICATIONS, ACTUAL LENGTH AND CONFIGURATION INFORMATION FROM FIELD.
8. PROVIDE AND INSTALL FIRE DAMPERS IN MECHANICAL DUCT WITH REQUIRED ACCESS DOORS AT ALL FIRE RATED ASSEMBLY PENETRATIONS. FIRE BARRIER IS AT GYP. BOARD. VERIFY AND COORDINATE ASSEMBLY AND BARRIER LOCATIONS WITH ARCHITECTURAL PLANS.
9. MECHANICAL CONTRACTOR TO PROVIDE DOCUMENTATION OF REQUIRED MANUFACTURER START–UP FOR EQUIPMENT INCLUDING MANUFACTURER, MODEL NUMBER, SERIAL NUMBER, COOLING CAPACITY, GAS HEATING INPUT, ALL ENTERING AND LEAVING TEMPERATURES, CONNECTED CIRCUIT VOLTAGE, AND VERIFICATION OF PROPER FUNCTION OF THERMOSTAT. CONTRACTOR SHALL PROVIDE MANUALS FOR EQUIPMENT AND NAME OF SERVICE AGENCY.
10. MECHANICAL CONTRACTOR TO PROVIDE AND INSTALL SINGLE THICKNESS TURNING VANES AT EACH 90 DEGREE SQUARE DUCT ELBOW.
11. MECHANICAL CONTRACTOR TO PROVIDE AND INSTALL TRANSFER AIR GRILLES FOR ALL LIVING SPACES (BEDROOMS, LIVING ROOMS, ETC.) AT THE CFM NOTED WITHIN THE SPACE. SEE THE PLANS AND DETAILS FOR ADDITIONAL INFORMATION. COORDINATE LOCATIONS WITH STRUCTURE AND OWNERS REPRESENTATIVE. TRANSFER SHALL INCLUDE BUT NOT LIMITED TO TWO TRANSFER GRILLES, DUCTING, AND SOUND INSULATION.
12. USING CFM NOTED ON PLANS INSTALL GRILLES AND DIFFUSERS WITH MAXIMUM NOISE CRITERIA (NC) OF 25 FOR ALL PUBLIC/COMMON AREAS AND AN NC OF 30 FOR RESIDENTIAL SPACES.

PROJECT MECHANICAL NOTES:

13. DUCTWORK SIZING, ROUTING, AND LOCATION TO BE FIELD VERIFIED AND APPROVED FOR ANY CHANGES TO THE DUCT SIZING AND/OR ROUTING PRIOR TO DUCT FABRICATION AND INSTALLATION. DUCTWORK FABRICATED PRIOR TO FIELD VERIFICATION AND APPROVALS THAT NEEDS TO BE ALTERED WILL BE ALTERED AS NEEDED BY THE CONTRACTOR WITH NO ADDITIONAL COST TO THE OWNER.
14. ALL FRESH/OUTSIDE AIR INTAKES SHALL BE 10 FEET MIN. FROM ALL EXHAUST & PLUMBING VENTS.
15. ALL EQUIPMENT SHALL HAVE A FLEXIBLE CONNECTION FOR THE RETURN AIR & SUPPLY AIR DUCTWORK.
16. BALANCE ALL SYSTEMS TO CFM NOTED AT EACH DIFFUSER AND GRILLE BY AN INDEPENDENT BALANCING CONTRACTOR (COMMON AREAS).
17. ALL GAS FIRED EQUIPMENT WILL BE TESTED BY CERTIFIED GAS INSTALLERS AND HAVE GREEN STICKERS STATING COMPLIANCE WITH ALL REQUIRED LOCAL AND 2021 IFGC REQUIREMENTS.
18. HEATING LOADS COMPLETED USING CHVAC OR OTHER APPROVED CALCULATION METHODS.
19. THE MAXIMUM LENGTH OF A CLOTHES DRYER EXHAUST DUCT SHALL NOT EXCEED 35 FEET FROM THE DRYER LOCATION TO THE OUTLET TERMINAL. THE MAXIMUM LENGTH OF THE DUCT SHALL BE REDUCED 2–1/2 FEET FOR EACH 45° BEND AND 5 FEET FOR EACH 90° BEND. THE MAXIMUM LENGTH OF THE EXHAUST DUCT DOES NOT INCLUDE THE TRANSITION DUCT. 2021 IMC 504.9.4.
20. REFRIGERANT PIPING INSULATION.
    - 20.1. INSULATE ALL REFRIGERANT SUCTION PIPING WITH 1/2" THICK FLEXIBLE FOAMED PLASTIC CLOSED CELL PIPE INSULATION.
    - 20.2. INSULATION SHALL HAVE A "K" FACTOR OF NOT MORE THAN .26 AT 70°F AND A WATER VAPOR TRANSMISSION RATE OF 0.1 PERM–INCH OR LESS IN CONFORMANCE WITH ASTM C–177 & ASTM C–355 WATER METHOD.
    - 20.3. WHEN INSULATION IS EXPOSED TO SUNLIGHT WRAP WITH POLYTAPE WITH ONE THIRD OVERLAP.
    - 20.4. INSTALL INSULATION BY SLITTING TUBULAR SECTIONS AND APPLYING OVER PIPING.
    - 20.5. PAINT ALL INSULATION AND/OR TAPE EXPOSED TO THE EXTERIOR WITH ULTRAVIOLET RESISTING PAINT.
21. COORDINATE ALL RETURN AIR & SUPPLY AIR DUCTWORK AND DIFFUSERS IN FIELD WITH LIGHTING AND OTHER SYSTEMS.
22. MECHANICAL CONTRACTOR SHALL INSTALL OWNER PROVIDED DRYERS. PURCHASED DRYER MODEL SHALL BE RATED FOR TOTAL SYSTEM EQUIVALENT LENGTH OR A POWER VENTILATOR FAN (LISTED & LABELED TO UL705) AND ACCESS PANEL (FIRE RATED AS REQUIRED) SHALL BE INSTALLED. IF DRYER EXHAUST DUCT POWER VENTILATOR IS INSTALLED COORDINATE ALL REQUIREMENTS WITH ELECTRICAL CONTRACTOR AND ENGINEER OF RECORD.
23. MECHANICAL CONTRACTOR TO COORDINATE WITH TRUSS MANUFACTURER AND OWNERS REPRESENTATIVE TO ENSURE ALL REQUIRED BLOCK–OUTS FOR DUCTING ARE PROVIDED.
24. COORDINATE ALL WORK WITH OTHER TRADES AS REQUIRED.

ROYAL ENGINEERING

ELECTRICAL
1837 S. EAST BAY BLVD.
PHONE: 801.375.2228

MECHANICAL
PROVO, UTAH 84606
FAX: 801.375.2676

COPYRIGHT© JOB# J24274.00 DATE PLOTTED: 03/19/2025

THESE DOCUMENTS ARE INSTRUMENTS OF PROFESSIONAL SERVICE AND THE ROYAL ENGINEERING'S INTERPRETATIONS, DECISIONS, OBSERVATIONS AND ADMINISTRATIONS, USE OR REPRODUCTION OF THESE DOCUMENTS IN WHOLE OR IN PART WITHOUT THE WRITTEN PERMISSION OF ROYAL ENGINEERING VIOLATES COPYRIGHTS, STATUTORY AND OTHER RESERVED RIGHTS. REFER TO ACT 17 U.S.C. PAR. 5 1 1 (91 91 WHICH PREEMPTS STATE AND LOCAL PUBLIC RECORD ACTS. REFER TO ACT 17 U.S.C. PAR. 301 (1991).

DEKOLD ARCHITECTURE INC.
104 E 600 S #540, Heber City, UT 84032
(208) 206-7338
www.behance.net/kevindekold
kevindekold@hotmail.com

Civil — CACHE LANDMARK — 95 W Golf Course Rd St. 101, Logan, UT 84321 — (435)713-0099
Landscape — LDG — 328 W 200 S #102, Salt Lake City, UT 84101 — (435)901-3127
Structural — REAVELEY — 675 E 500 S St. 400, Salt Lake City, UT 84102 — (801)505-4026
Mechanical — ROYAL — 1837 S E Bay Blvd, Provo, UT 84606 — (801)375-2228
Electrical — BNA CONSULTING — 4225 W Lake Park Blvd St. 275, West Valley City, UT 84121 — (435)628-3670

AIS - WEST VALLEY

WEST VALLEY, UT

REVISIONS:

SHEET NUMBER:

M–0.1

03/19/25

11/28/2018 11:04:16 AM

MECHANICAL KEYED NOTES:

1 SUGGESTED WALL HEATER LOCATION. INSTALL PER MANUFACTURES RECOMMENDATIONS. INSTALL WITHIN WALL WHEN POSSIBLE. COORDINATE LOCATION, WALL OR SURFACE MOUNTING WITH STRUCTURE AND OWNER REPRESENTATIVE.

2 FIELD VERIFY THEMOSTAT LOCATION WITH OWNERS REPRESENTATIVE WITH HEAVY DUTY VANDAL RESISTANT COVER. INSTALL THERMOSTAT AT 48" ABOVE FINISHED FLOOR LEVEL.

3 PROVIDE AND INSTALL RETURN AIR GRILLE CAPABLE OF CFM NOTED WITH AN NC OF NO GREATER THAN 30. PROVIDE FILTER SECTION AT AIR HANDLER AFTER FRESH AIR INTAKE.

4 SUPPLY AND RETURN DUCT DROPS FROM FURNACE ABOVE. FIELD VERIFY WITH SITE CONDITIONS.

5 SEE ENLARGED UNIT PLAN FOR PLUMBING DESIGN IN THIS AREA.

6 PROPOSED LOCATION OF OUTDOOR CONDENSING UNIT ON 4" CONCRETE HOUSEKEEPING PAD. FIELD VERIFY EXACT LOCATION WITH OWNERS REPRESENTATIVE AND STRUCTURE. INSTALL PER MANUFACTURERS RECOMMENDATIONS.

7 PROVIDE AND INSTALL DRYER VENT BOX AND 4" ROUND EXHAUST DUCT TO OWNER REPRESENTATIVE APPROVED EXHAUST VENT TERMINATION. VENT SHALL BE CONSTRUCTED OF METAL WITH A SMOOTH INTERIOR FINISH. VERIFY FINAL TERMINATION LOCATION IN FIELD WITH STRUCTURE AND OTHER TRADES. DRYER MANUFACTURERS MAXIMUM EXHAUST DUCTING LENGTH SHALL MEET OR EXCEED MAXIMUM INSTALLED EQUIVALENT EXHAUST DUCTING LENGTH. DRYER DUCTS IN THE ABSENCE OF THE MANUFACTURER INSTRUCTIONS SHALL BE LIMITED TO THE EQUIVALENT LENGTH CALCULATIONS OF 2021 IMC TABLE 504.8.4.1. PAINT EXTERIOR WALL TERMINATIONS SAME COLOR AS THE SURROUNDING WALL. IF DRYER BOX IS INSTALLED IN A FIRE RATED ASSEMBLY THE BOX IS REQUIRED TO BE RATED TO MEET OR EXCEED THE WALLS RATING IN ACCORDANCE WITH IMC SECTION 603. COORDINATE FIRE RATED ASSEMBLIES WITH ARCHITECTURAL PLANS. A 12" X 12" RELIEF AIR LOUVER (10"X10" DUCT) SHALL BE PROVIDED AND INSTALLED PER IMC 504.6.

8 ALL EXHAUST AIR DUCTING SHALL TERMINATE WITH A BACKDRAFT DAMPER AND MANUFACTURER/OWNERS REPRESENTATIVE RECOMMENDED TERMINATION GRILLE AT A MINIMUM OF 3 FEET FROM OPERABLE BUILDING OPENINGS AND 10' FROM MECHANICAL FRESH AIR INTAKES (IMC SECTION 501.3.1 #3).

9 PROVIDE AND INSTALL 6" ROUND EXHAUST DUCT TO OWNER REPRESENTATIVE APPROVED EXHAUST VENT TERMINATION. VERIFY LOCATION IN FIELD. ACTUAL DUCT SIZE DETERMINED BY EXHAUST FAN OUTLET. EXHAUST TERMINATION SHALL BE 3' FROM ANY OPERABLE WINDOW/DOOR.

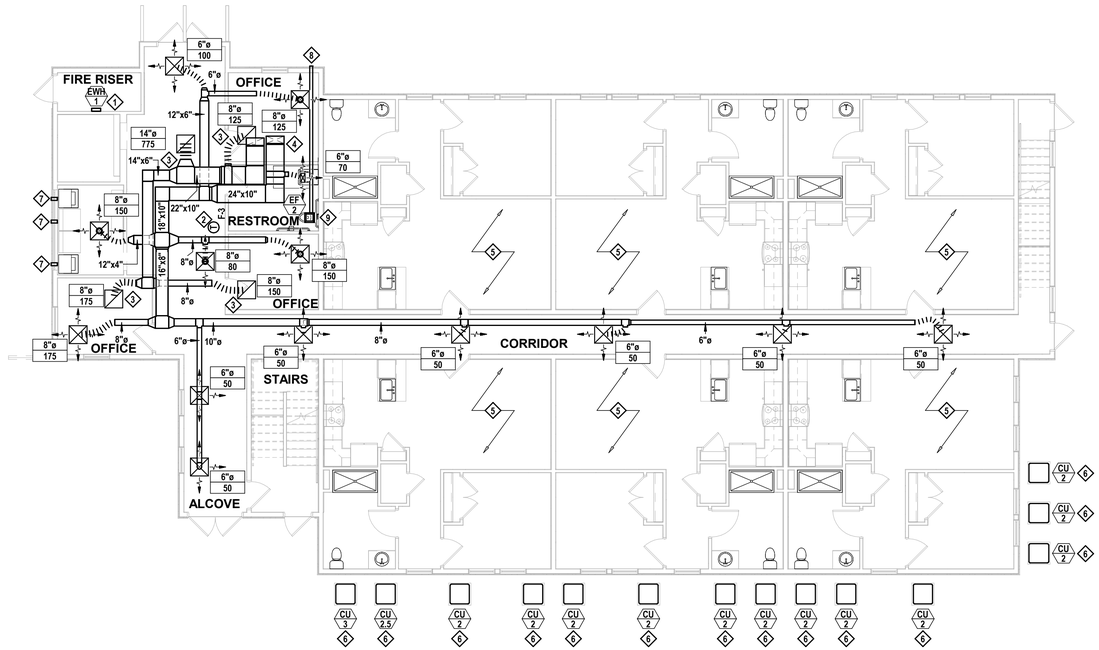

MAIN LEVEL MECHANICAL FLOOR PLAN

SCALE: 1/8" = 1'-0"

DEKOLD ARCHITECTURE INC.
1975 Belmont Ave., Idaho Falls, ID 83404
(208) 206-7338
www.behance.net/kevindekold
kevindekold@hotmail.com

MARK L MAKIN
9788
REGISTERED PROFESSIONAL ENGINEER
STATE OF UTAH

Civil — CACHE LANDMARK — 95 W Golf Course Rd St. 101 Logan, UT 84321 (435)713-0099
Landscape — LDG — 328 W 200 S #102 Salt Lake City, UT 84101 (435)901-3127
Structural — REAVELEY — 675 E 500 S ST. 400 Salt Lake City, UT 84102 (801)505-4026
Mechanical — ROYAL — 1837 S E Bay Blvd Provo, UT 84606 (801)375-2228
Electrical — BNA CONSULTING — 4225 W Lake Park Blvd St. 275 West Valley City, UT 84121 (435)628-3670

AIS - WEST VALLEY

WEST VALLEY, UT

REVISIONS:

ROYAL ENGINEERING
ELECTRICAL
1837 S. EAST BAY BLVD.
PHONE: 801.375.2228
MECHANICAL
PROVO, UTAH 84606
FAX: 801.375.2676

COPYRIGHT © JOB# J24274.00 DATE PLOTTED: 03/19/2025
THESE DOCUMENTS ARE INSTRUMENTS OF PROFESSIONAL SERVICE AND THE INFORMATION CONTAINED HEREIN IS INCOMPLETE UNLESS IN CONJUNCTION WITH ALL OTHER CONTRACT DOCUMENTS. THEY ARE NOT TO BE USED FOR ADVERTISEMENT, USE OR REPRODUCTION OF THOSE DOCUMENTS IN WHOLE OR IN PART WITHOUT ROYAL ENGINEERINGS CONSENT IS IN VIOLATION OF COMMON LAW COPYRIGHTS, STATUTORY AND OTHER RESERVED RIGHTS. REFER TO ACT 17 U.S.C. PAR. 102. ALL RIGHTS STATE AND LOCAL PUBLIC RECORD ACTS. REFER TO ACT 17 U.S.C. PAR. 301.117911.

SHEET NUMBER:

M-1.1

03/19/25

3/7/2025 2:01:51 PM

MECHANICAL KEYED NOTES:

1 PROVIDE AND INSTALL RETURN AIR GRILLE CAPABLE OF CFM NOTED WITH AN NC OF NO GREATER THAN 30. PROVIDE FILTER SECTION AT AIR HANDLER AFTER FRESH AIR INTAKE.

2 SEE ENLARGED UNIT PLAN FOR PLUMBING DESIGN IN THIS AREA.

3 FIELD VERIFY THEMOSTAT LOCATION WITH OWNERS REPRESENTATIVE WITH HEAVY DUTY VANDAL RESISTANT COVER. INSTALL THERMOSTAT AT 48" ABOVE FINISHED FLOOR LEVEL.

4 ANTICIPATED ROUTING OF FURNACE PVC EXHAUST AND COMBUSTION PIPING PER MANUFACTURERS RECOMMENDATIONS (BY MECHANICAL CONTRACTOR) SHOWN FOR REFERENCE. TERMINATE WITH CONCENTRIC TERMINATION KIT. COORDINATE TERMINATION WITH PLUMBING CONTRACTOR TO MAINTAIN ALL REQUIRED CLEARANCES, 10' MINIMUM FROM OUTSIDE AIR DUCT.

5 PROVIDE AND INSTALL DRYER VENT BOX AND 4" ROUND EXHAUST DUCT TO OWNER REPRESENTATIVE APPROVED EXHAUST VENT TERMINATION. VENT SHALL BE CONSTRUCTED OF METAL WITH A SMOOTH INTERIOR FINISH. VERIFY FINAL TERMINATION LOCATION IN FIELD WITH STRUCTURE AND OTHER TRADES. DRYER MANUFACTURERS MAXIMUM EXHAUST DUCTING LENGTH SHALL MEET OR EXCEED MAXIMUM INSTALLED EQUIVALENT EXHAUST DUCTING LENGTH. DRYER DUCTS IN THE ABSENCE OF THE MANUFACTURER INSTRUCTIONS SHALL BE LIMITED TO THE EQUIVALENT LENGTH CALCULATIONS OF 2021 IMC TABLE 504.8.4.1. PAINT EXTERIOR WALL TERMINATIONS SAME COLOR AS THE SURROUNDING WALL. IF DRYER BOX IS INSTALLED IN A FIRE RATED ASSEMBLY THE BOX IS REQUIRED TO BE RATED TO MEET OR EXCEED THE WALLS RATING IN ACCORDANCE WITH IMC SECTION 603. COORDINATE FIRE RATED ASSEMBLIES WITH ARCHITECTURAL PLANS. A 12" X 12" RELIEF AIR LOUVER (10"X10" DUCT) SHALL BE PROVIDED AND INSTALLED PER IMC 504.6.

6 PROPOSED LOCATION OF FRESH AIR INTAKE FOR FURNACE IN THIS AREA. MAINTAIN ALL REQUIRED CLEARANCES. FIELD VERIFY EXACT ROUTING WITH STRUCTURE. REFER TO OUTSIDE AIR DETAIL FOR MORE INFORMATION.

7 PROPOSED LOCATION OF SUPPLY AND RETURN DUCT DROPS FROM FURNACE TO CEILING SPACE OF LEVEL BELOW. FIELD VERIFY WITH SITE CONDITIONS. PROVIDE AND INSTALL FIRE/SMOKE DAMPER. FIELD VERIFY EXACT LOCATION WITH STRUCTURE.

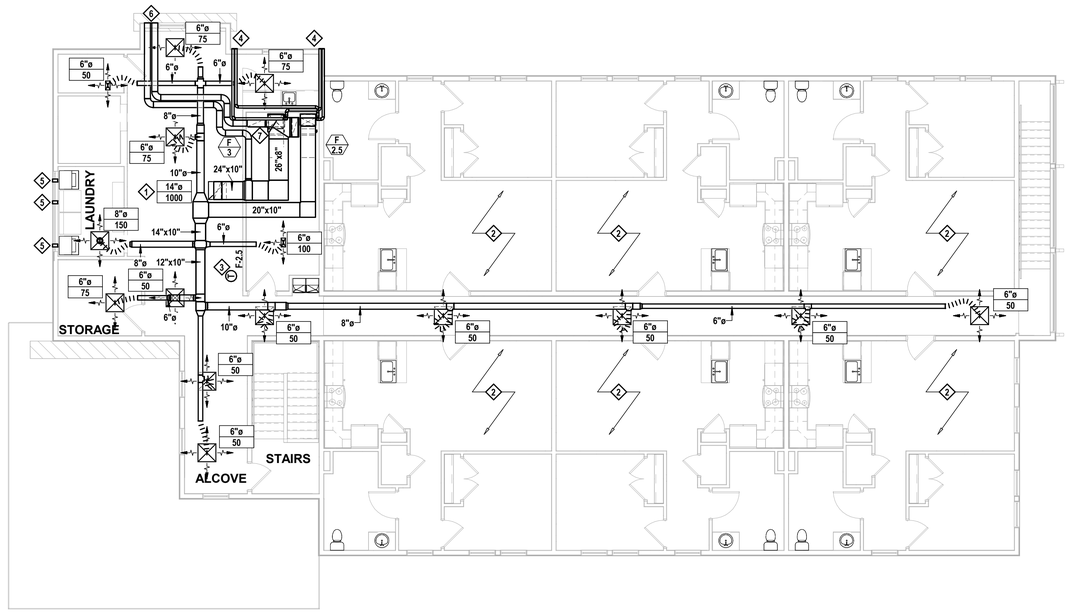

N

SECOND LEVEL MECHANICAL FLOOR PLAN

SCALE: 1/8" = 1'-0"

DEKOLD ARCHITECTURE INC.
1975 Belmont Ave., Idaho Falls, ID 83404
(208) 206-7338
www.behance.net/kevindekold
kevindekold@hotmail.com

Civil
CACHE LANDMARK
95 W Golf Course Rd St. 101
Logan, UT 84321
(435)713-0099

Landscape
LDG
328 W 200 S #102
Salt Lake City, UT 84101
(435)901-3127

Structural
REAVELEY
675 E 500 S ST. 400
Salt Lake City, UT 84102
(801)505-4026

Mechanical
ROYAL
1837 S E Bay Blvd
Provo, UT 84606
(801)375-2228

Electrical
BNA CONSULTING
4225 W Lake Park Blvd St. 275
West Valley City, UT 84121
(435)628-3670

AIS - WEST VALLEY

WEST VALLEY, UT

REVISIONS:

SHEET NUMBER:

M-1.2

03/19/25

ROYAL ENGINEERING
ELECTRICAL
1837 S. EAST BAY BLVD.
PHONE: 801.375.2228
MECHANICAL
PROVO, UTAH 84606
FAX: 801.375.2676

COPYRIGHT © JOB# J24274.00 DATE PLOTTED: 03/19/2025

THESE DOCUMENTS ARE INSTRUMENTS OF PROFESSIONAL SERVICE AND THE INFORMATION CONTAINED HEREIN IS NOT TO BE USED IN WHOLE OR IN PART WITH ROYAL ENGINEERING'S INTERPRETATIONS, DECISIONS, OBSERVATIONS AND ADMINISTRATIONS. USE OR REPRODUCTION OF THESE DOCUMENTS IN WHOLE OR IN PART WITHOUT THE WRITTEN PERMISSION OF ROYAL ENGINEERING VIOLATES COPYRIGHTS, STATUTORY AND OTHER RESERVED RIGHTS. REFER TO ACT 17 U.S.C. PAR. 511 (1991), WHICH PREEMPTS STATE AND LOCAL PUBLIC RECORD ACTS. REFER TO ACT 17 U.S.C. PAR. 301 (1991).

MECHANICAL KEYED NOTES:

1 PROVIDE AND INSTALL RETURN AIR GRILLE CAPABLE OF CFM NOTED WITH AN NC OF NO GREATER THAN 30. PROVIDE FILTER SECTION AT AIR HANDLER AFTER FRESH AIR INTAKE.

2 ALL EXHAUST AIR DUCTING SHALL TERMINATE WITH A BACKDRAFT DAMPER AND MANUFACTURER/OWNERS REPRESENTATIVE RECOMMENDED TERMINATION GRILLE AT A MINIMUM OF 3 FEET FROM OPERABLE BUILDING OPENINGS AND 10' FROM MECHANICAL FRESH AIR INTAKES (IMC SECTION 501.3.1 #3).

3 PROVIDE AND INSTALL 6" ROUND EXHAUST DUCT TO OWNER REPRESENTATIVE APPROVED EXHAUST VENT TERMINATION. VERIFY LOCATION IN FIELD. ACTUAL DUCT SIZE DETERMINED BY EXHAUST FAN OUTLET. EXHAUST TERMINATION SHALL BE 3' FROM ANY OPERABLE WINDOW/DOOR.

4 ANTICIPATED ROUTING OF FURNACE PVC EXHAUST AND COMBUSTION PIPING PER MANUFACTURERS RECOMMENDATIONS (BY MECHANICAL CONTRACTOR) SHOWN FOR REFERENCE. TERMINATE WITH CONCENTRIC TERMINATION KIT. COORDINATE TERMINATION WITH PLUMBING CONTRACTOR TO MAINTAIN ALL REQUIRED CLEARANCES, 10' MINIMUM FROM OUTSIDE AIR DUCT.

5 PROPOSED LOCATION OF FRESH AIR INTAKE FOR FURNACE IN THIS AREA. MAINTAIN ALL REQUIRED CLEARANCES. FIELD VERIFY EXACT ROUTING WITH STRUCTURE. REFER TO OUTSIDE AIR DETAIL FOR MORE INFORMATION.

6 PROVIDE AND INSTALL KITCHEN HOOD EXHAUST DUCT TO OWNER'S REPRESENTATIVE APPROVED EXHAUST VENT TERMINATION. VERIFY LOCATION AND ROUTING IN FIELD WITH HOOD INSTALLED AND STRUCTURE. ACTUAL DUCT SIZE DETERMINED BY EXHAUST HOOD OUTLET. COORDINATE FINISH WITH OWNER'S REPRESENTATIVE PRIOR TO ORDERING. PROVIDE WITH ADA CONTROLS.

7 FIELD VERIFY THERMOSTAT LOCATION WITH OWNERS REPRESENTATIVE. INSTALL THERMOSTAT AT 48" ABOVE FINISHED FLOOR LEVEL IN ALL ACCESSIBLE ROOMS AND 60" ABOVE FINISHED FLOOR LEVEL IN ALL NON-ACCESSIBLE ROOMS.

8 PROPOSED LOCATION OF TRANSFER GRILLE(S) FOR NOTED CFM IN ENCLOSED LIVING SPACE. COORDINATE FINAL LOCATION WITH STRUCTURE. SEE TRANSFER DETAIL FOR MORE INFORMATION. A 1" DOOR UNDERCUT (36" DOOR) CAN ACCOUNT FOR UP TO 80 CFM OF RETURN AIR TRANSFER.

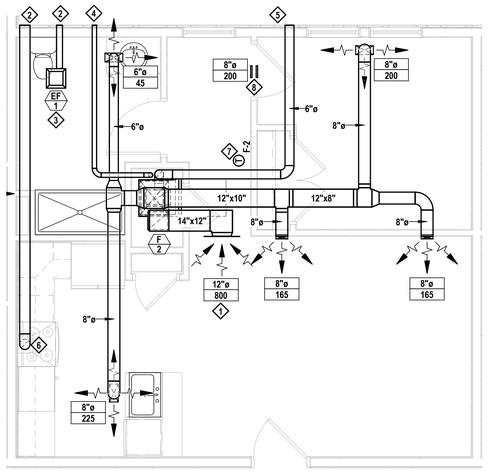

ENLARGED 1 BEDROOM MECHANICAL PLAN

SCALE: 1/4" = 1'-0"

DEKOLD ARCHITECTURE INC.
1975 Belmont Ave., Idaho Falls, ID 83404
(208) 206-7338
www.behance.net/kevindekold
kevindekold@hotmail.com

MARK L MAGN
9766705
REGISTERED PROFESSIONAL ENGINEER
STATE OF UTAH

Civil: CACHE LANDMARK, 95 W Golf Course Rd St. 101, Logan, UT 84321, (435)713-0099
Landscape: LDG, 328 W 200 S #102, Salt Lake City, UT 84101, (435)901-3127
Structural: REAVELEY, 675 E 500 S ST. 400, Salt Lake City, UT 84102, (801)505-4026
Mechanical: ROYAL, 1837 S E Bay Blvd, Provo, UT 84606, (801)375-2228
Electrical: BNA CONSULTING, 4225 W Lake Park Blvd St. 275, West Valley City, UT 84121, (435)628-3670

AIS - WEST VALLEY

WEST VALLEY, UT

REVISIONS:

SHEET NUMBER:

M-4.1

03/19/25

ROYAL ENGINEERING
ELECTRICAL
1837 S. EAST BAY BLVD.
PHONE: 801.375.2228
MECHANICAL
PROVO, UTAH 84606
FAX: 801.375.2676

COPYRIGHT © JOB# J24274.00 DATE PLOTTED: 03/19/2025

THESE DOCUMENTS ARE INSTRUMENTS OF PROFESSIONAL SERVICE AND THE INFORMATION CONTAINED HEREIN IS INCOMPLETE UNLESS IN CONJUNCTION WITH ROYAL ENGINEERING'S INTERPRETATIONS, DECISIONS, OBSERVATIONS AND RESPONSIVE ACTION. THESE DOCUMENTS MAY NOT BE USED IN WHOLE OR IN PART WITHOUT ROYAL ENGINEERING'S CONSENT IS IN VIOLATION OF COMMON LAW COPYRIGHTS, STATUTORY AND OTHER RESERVED RIGHTS, REFER TO ACT 17 U.S.C. PAR. 301 FOR FEDERAL RIGHTS AND STATE AND LOCAL PUBLIC RECORD ACTS. REFER TO ACT 17 U.S.C. PAR. 301 (1990).

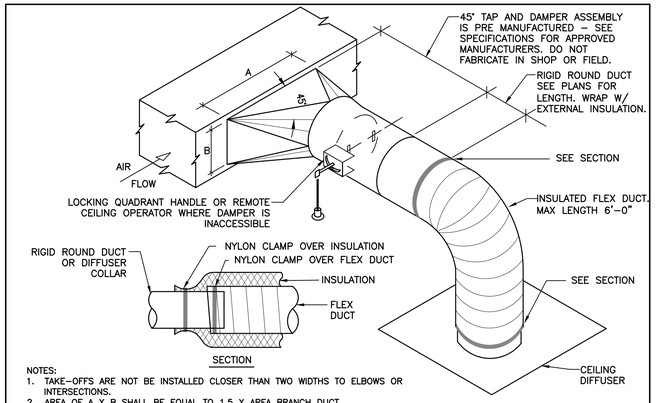

NOTES:
1. TAKE–OFFS ARE NOT BE INSTALLED CLOSER THAN TWO WIDTHS TO ELBOWS OR INTERSECTIONS.
2. AREA OF A X B SHALL BE EQUAL TO 1.5 X AREA BRANCH DUCT.
3. TAKE–OFF DESIGN GUIDES: FLEXMASTER USA STO–LDS, SHEET METAL CONNECTORS HET, OR AIR–RITE ST–1HD.

INSULATED ROUND TAKE-OFF DETIAL

SCALE: NONE

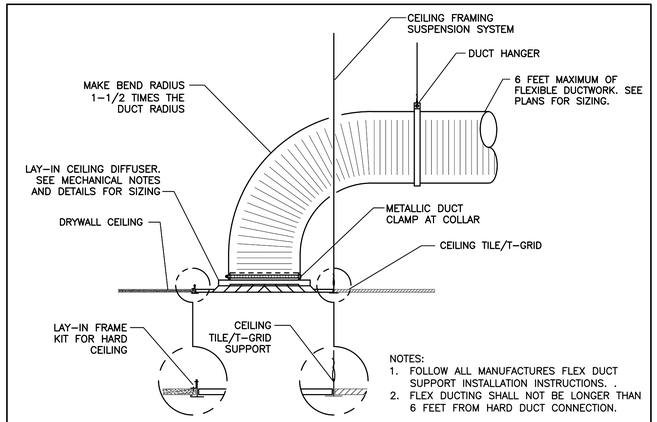

NOTES:
1. FOLLOW ALL MANUFACTURES FLEX DUCT SUPPORT INSTALLATION INSTRUCTIONS. .
2. FLEX DUCTING SHALL NOT BE LONGER THAN 6 FEET FROM HARD DUCT CONNECTION.

DIFFUSER / GRILLE WITH FLEX DUCT DETAIL

SCALE: NONE

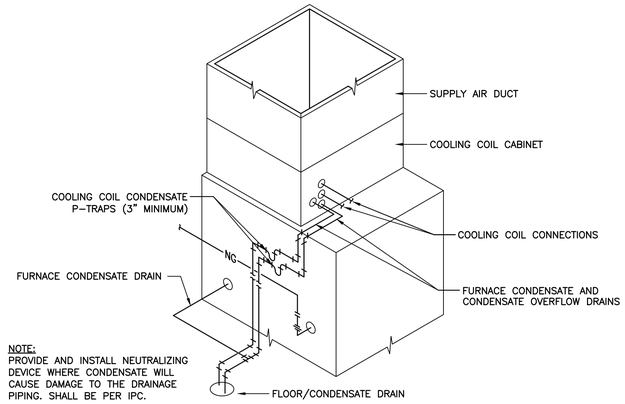

NOTE:
PROVIDE AND INSTALL NEUTRALIZING DEVICE WHERE CONDENSATE WILL CAUSE DAMAGE TO THE DRAINAGE PIPING. SHALL BE PER IPC.

FURNACE CONDENSATE DRAIN DETAIL

SCALE: NONE

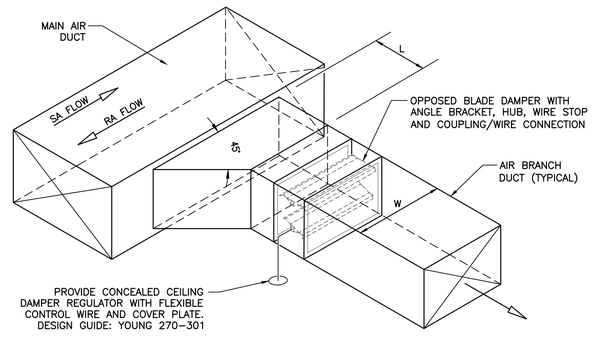

NOTE:
L=1/4 W (4" MINIMUM.)

BRANCH DUCT TAKE-OFF WITH DAMPER DETAIL

SCALE: NONE

MINIMUM DUCT INSULATION R–VALUES FOR UNCONDITIONED SPACES PER 2021 IECC C403.12.1
SUPPLY = R6
RETURN = R6

MINIMUM DUCT INSULATION R–VALUES WHEN LOCATED OUTSIDE THE BUILDING PER 2021 IECC C403.12.1
SUPPLY = R8 (ZONE 1–4) R12 (ZONE 5–8)
RETURN = R8 (ZONE 1–4) R12 (ZONE 5–8)

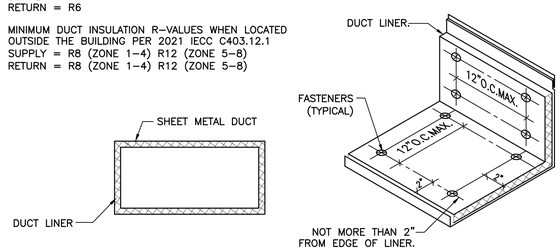

NOTES:
1. THERMAL AND SOUND INSULATION AND COVERINGS, LININGS AND ADHESIVES (WHEN USED) INSTALLED IN CONCEALED AND EXPOSED SPACES SHALL MEET THE REQUIREMENTS OF ASTM E 84. FLAME SPREAD INDEX THAT IS NOT MORE THAN 25 AND A SMOKE–DEVELOPED INDEX OF NOT MORE THAN 50 WHEN TESTED IN ACCORDANCE WITH ASTM CODE SECTIONS.
2. ALL TRANSVERSE AND LONGITUDINAL EDGES OF LINER TO BE COATED WITH ADHESIVE.
3. STATE AND LOCAL CODES, AMENDMENTS AND CURRENT CODES SUPERCEDE ALL 'R' VALUES SHOWN.

DUCT LINER DETAIL

SCALE: NONE

DIMENSION OF LONGEST SIDE, INCHES	SHEET METAL GAGE (ALL FOUR SIDES)	TRANSVERSE REINFORCING (1)					
		MINIMUM REINFORCING ANGLE SIZE AND MAXIMUM LONGITUDINAL SPACING BETWEEN TRANSVERSE JOINTS &/OR INTERMEDIATE REINFORCING	AT JOINTS				
			MIN. H. IN.	DRIVE SLIP / PLAIN S SLIP	HEMMED S SLIP	ALTER'NT BAR SLIP	REINFORCED BAR SLIP
				RECOMMENDED GAUGE	RECOMMENDED GAUGE	RECOMMENDED GAUGE	RECOMMENDED GAUGE
UP THRU 12	26	NONE REQUIRED	1	26	26	24	24
13 – 18	24	NONE REQUIRED	1	24	24	24	24
19 – 30	24	1"X1"X1/8" @ 60 IN	1	24	24	24	24
31 – 36	22	1"X1"X1/8" @ 60 IN	1	–	–	22	22

(1) TRANSVERSE REINFORCING SIZE IS DETERMINED BY DIMENSION OF SIDE TO WHICH ANGLE IS APPLIED.

(2) LONGITUDINAL JOINTS TO BE PITTSBURG OR SNAP LOCK TYPE.

(3) ALL DUCTING TO BE CONSTRUCTED TO SMACNA INSTALLATION STANDARDS AND SPECIFICATIONS.

DUCT CONSTRUCTION DETAIL

SCALE: NONE

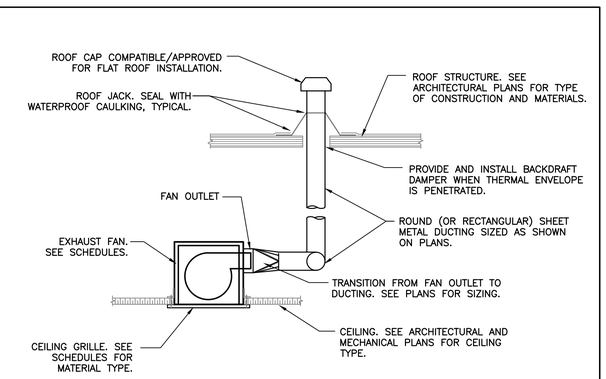

NOTE:
ALL EXHAUST DUCT PENETRATIONS OF THERMAL ENVELOPE SHALL HAVE A BACK DRAFT DAMPER AT THE DUCT PENETRATION.

CEILING EXHAUST FAN DETAIL

SCALE: NONE

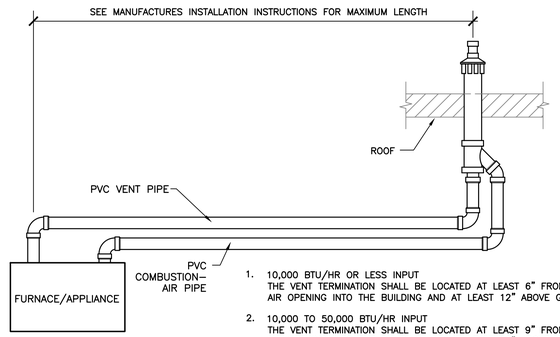

1. 10,000 BTU/HR OR LESS INPUT
THE VENT TERMINATION SHALL BE LOCATED AT LEAST 6" FROM ANY AIR OPENING INTO THE BUILDING AND AT LEAST 12" ABOVE GRADE.
2. 10,000 TO 50,000 BTU/HR INPUT
THE VENT TERMINATION SHALL BE LOCATED AT LEAST 9" FROM ANY AIR OPENING INTO THE BUILDING AND AT LEAST 12" ABOVE GRADE.
3. 50,000 BTU/HR OR GREATER
THE VENT TERMINATION SHALL BE LOCATED AT LEAST 12" FROM ANY AIR OPENING INTO THE BUILDING AND AT LEAST 12" ABOVE GRADE.

APPLIANCE PVC VENT TO ROOF CLEARANCES DETAIL

SCALE: NONE

NOTE:
EXHAUST DUCT PENETRATIONS OF THERMAL ENVELOPE SHALL HAVE A BACK DRAFT DAMPER AT THE DUCT PENETRATION.

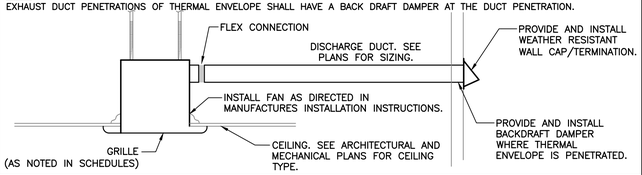

TYPICAL CEILING MOUNTED EXHAUST FAN

SCALE: NONE

ROYAL ENGINEERING

ELECTRICAL
1837 S. EAST BAY BLVD.
PHONE: 801.375.2228

MECHANICAL
PROVO, UTAH 84606
FAX: 801.375.2676

COPYRIGHT© JOB# J24274.00 DATE PLOTTED: 03/19/2025

THESE DOCUMENTS ARE INSTRUMENTS OF PROFESSIONAL SERVICE AND THE INFORMATION CONTAINED HEREIN IS INCOMPLETE UNLESS IN CONJUNCTION WITH ROYAL ENGINEERING'S INTERPRETATIONS, DECISIONS, OBSERVATIONS AND OTHER SERVICE PHASES. THESE DOCUMENTS MAY NOT BE USED, COPIED OR IN PART WITHOUT ROYAL ENGINEERING'S CONSENT IS IN VIOLATION OF COMMON LAW COPYRIGHTS, STATUTORY AND OTHER RESERVED RIGHTS. REFER TO ACT 17 U.S.C. PAR. 511 (1990's), WHICH PREEMPTS STATE AND LOCAL PUBLIC RECORD ACTS. REFER TO ACT 17 U.S.C. PAR. 301 (1990's).

DEKOLD ARCHITECTURE INC.
104 E 600 S #540, Heber City, UT 84032
(208) 206-7338
www.behance.net/kevindekold
kevindekold@hotmail.com

Civil
CACHE LANDMARK
95 W Golf Course Rd St. 101
Logan, UT 84321
(435)713-0099

Landscape
LDG
328 W 200 S #102
Salt Lake City, UT 84101
(435)901-3127

Structural
REAVELEY
675 E 500 S St. 400
Salt Lake City, UT 84102
(801)500-4026

Mechanical
ROYAL
1837 S E Bay Blvd
Provo, UT 84606
(801)375-2228

Electrical
BNA CONSULTING
4225 W Lake Park Blvd St. 275
West Valley City, UT 84121
(435)628-3070

AIS - WEST VALLEY

WEST VALLEY, UT

REVISIONS:

SHEET NUMBER:

M–5.1

03/19/25

11/28/2018 11:04:16 AM

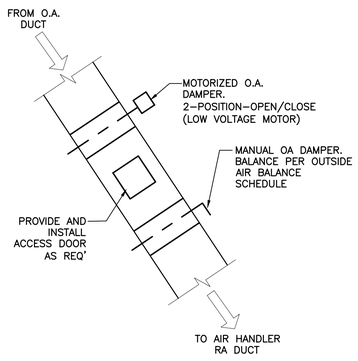

CONTROL SEQUENCES

1. MOTORIZED OUTSIDE AIR DAMPER SHALL OPEN DURING OCCUPIED MODE AND SHALL REMAIN CLOSED DURING UNOCCUPIED MODE.
2. DURING A CALL FOR HEAT, IN BOTH OCCUPIED AND UNOCCUPIED MODES, THE AIR HANDLER HEATING SYSTEM SHALL CYCLE ON AND OPERATE UNTIL THE PROGRAMMED SET–POINT IS REACHED.
3. DURING A CALL FOR COOLING, IN BOTH OCCUPIED AND UNOCCUPIED MODES, THE AIR HANDLER AND OUTDOOR UNIT SHALL CYCLE ON IN COOLING MODE AND OPERATE UNTIL THE PROGRAMMED SET–POINT IS REACHED.
4. UNLESS OTHERWISE SPECIFIED, EACH HVAC SYSTEM SHALL BE CONTROLLED BY A 7–DAY PROGRAMMABLE THERMOSTAT. THERMOSTAT SHALL HAVE OCCUPIED AND UNOCCUPIED MODES. THERMOSTAT SHALL MEET CURRENT REQUIREMENTS OF THE INTERNATIONAL ENERGY CONSERVATION CODE.
5. MECHANICAL CONTRACTOR SHALL PROVIDE AND INSTALL ALL LOW VOLTAGE WIRING, LOW VOLTAGE MOTORIZED ACTUATORS FOR DAMPER CONTROL, AND ANY OTHER NEEDED COMPONENTS FOR A FULLY OPERATIONAL SYSTEM.
6. THERMOSTAT DESIGN STANDARD SHALL BE PRO1 T721i (1–STAGE COOLING).

RESIDENTIAL / PRIVATE - TYPICAL OUTSIDE AIR DUCT DETAIL

SCALE: NONE

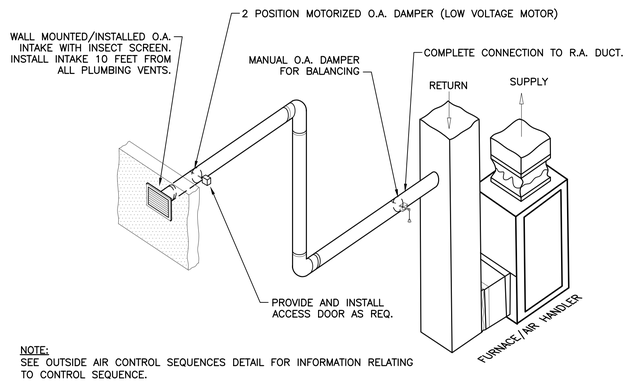

NOTE:
SEE OUTSIDE AIR CONTROL SEQUENCES DETAIL FOR INFORMATION RELATING TO CONTROL SEQUENCE.

TYPICAL WALL MOUNTED OUTSIDE AIR INTAKE

SCALE: NONE

DEKOLD ARCHITECTURE INC.
104 E 600 S #540, Heber City, UT 84032
(208) 206-7338
www.behance.net/kevindekold
kevindekold@hotmail.com

LICENSED MARK L MAHN 5/19/25

Structural	Landscape	Civil
REAVELEY	LDG	CACHE LANDMARK
675 E 500 S St. 400 Salt Lake City, UT 84102 (801)505-4026	328 W 200 S #102 Salt Lake City, UT 84101 (435)901-3127	95 W Golf Course Rd St. 101 Logan, UT 84321 (435)713-0099

Mechanical	Electrical
ROYAL	BNA CONSULTING
1837 S E Bay Blvd Provo, Ut 84606 (801)375-2228	4225 W Lake Park Blvd St. 275 West Valley City, UT 84121 (435)628-3670

AIS - WEST VALLEY

WEST VALLEY, UT

REVISIONS:

SHEET NUMBER:

M–5.2

03/19/25

ROYAL ENGINEERING
ELECTRICAL
1837 S. EAST BAY BLVD.
PHONE: 801.375.2228
MECHANICAL
PROVO, UTAH 84606
FAX: 801.375.2676

COPYRIGHT© JOB# J24274.00 DATE PLOTTED: 03/19/2025
THESE DOCUMENTS ARE INSTRUMENTS OF PROFESSIONAL SERVICE AND THE INFORMATION CONTAINED HEREIN IS THE PROPERTY OF ROYAL ENGINEERING. IN ACCORDANCE WITH ROYAL ENGINEERING'S INTERPRETATIONS, DECISIONS, OBSERVATIONS AND ADMINISTRATIONS, USE OR REPRODUCTION OF THESE DOCUMENTS IN WHOLE OR IN PART IS PROHIBITED. THESE DOCUMENTS ARE PROTECTED BY FEDERAL COPYRIGHTS, STATUTORY AND OTHER RESERVED RIGHTS. REFER TO ACT 17 U.S.C. PAR. 5 1 1 93 1, WHICH PREEMPTS STATE AND LOCAL PUBLIC RECORD ACTS. REFER TO ACT 17 U.S.C. PAR. 301 (1991).

11/28/2018 11:04:16 AM

FURNACE 95% AFUE (1-STAGE, SPLIT SYSTEM)

FURNACE												CONDENSING UNIT								REMARKS
MARK	DESIGN GUIDE	NOMINAL COOLING SUPPLY CFM	ESP (IN)	COOLING EAT DB/WB (°F)	COOLING LAT DB/WB (°F)	COOLING COIL CAPACITY (TONS)	HEATING INPUT CAPACITY (BTU/hr)	HEATING EAT/LAT DB (°F)	ELECTRICAL			MARK	DESIGN GUIDE	MINIMUM NOMINAL SIZE (TONS)	ELECTRICAL			SEER	REFRIGERANT	MAX OPERATING WEIGHT	
									VOLT/PH/HZ	UNIT MCA	UNIT MOCP				VOLT/PH/HZ	UNIT MCA	UNIT MOCP				
F 2	CARRIER 59SC SERIES	800	0.5	80/62	54.4/51.9	2.0	26,000	65/95	120/1/60	9.6	15	CU 2	CARRIER 24SPA6	2	208/1/60	17.7	30	15	A2L	160	
F 2.5	CARRIER 59SC SERIES	1,000	0.5	80/62	54.4/51.9	2.5	40,000	65/95	120/1/60	9.6	15	CU 2.5	CARRIER 24SPA6	2.5	208/1/60	16.8	30	15	A2L	165	
F 3	CARRIER 59SP SERIES	1,200	0.5	80/62	54.4/51.9	3.0	60,000	65/95	120/1/60	10.0	15	CU 3	CARRIER 24SPA6	3	208/1/60	18.1	30	15	A2L	175	

1. SITE CONDITIONS ARE 98/62° DB/WB SUMMER, 3°F DB WINTER, AND AN ELEVATION OF 4,250 FEET ABOVE SEA LEVEL.
2. APPROVED MANUFACTURERS: AMERICAN STANDARD, CARRIER, LENNOX, TRANE, YORK. (SUBJECT TO DOCUMENT CONFORMANCE).
3. WITH CONCENTRIC VENT KIT AND TXV.
4. MATCH COOLING COIL WITH CONDENSING UNIT. SHALL BE COMPATIBLE WITH FURNACE. FURNACE SHALL BE DESIGNED FOR MULTI-POSITION INSTALLATION. COORDINATE COIL WITH FURNACE ORIENTATION.
5. SINGLE STAGE HEATING & COOLING.
6. WITH LOW AMBIENT OPERATION KIT AND HARD-START ASSIST AT CONDENSING UNIT.

ELECTRIC WALL HEATER SCHEDULE

MARK	DESIGN GUIDE	NOMINAL BTUH	ELECTRICAL			MOUNTING	REMARKS
			VOLTS/PH/HZ	NOMINAL LOAD WATTS	FULL LOAD AMPS		
EWH 1	BROAN 174	5,120	120/1/60	1,500	12.5	SURFACE/WALL	1, 2, 3, 4, 5, 6, 7

1. APPROVED MANUFACTURERS: BROAN, BERKO, QMARK, MARKEL, RAYWALL, REZNOR, KING (SUBJECT TO PROJECT DOCUMENT CONFORMANCE)
2. DOWNFLOW 20 GAUGE STEEL LOUVERS, WHITE ENAMEL FINISH UNLESS SPECIFIED DIFFERENTLY BY ARCHITECT AND/OR OWNER REPRESENTATIVE.
3. CONTRACTOR SHALL INSTALL EQUIPMENT PER MANUFACTURER'S SPECIFICATIONS.
4. WITH INTEGRAL THERMOSTAT.
5. PERMANENTLY LUBRICATED MOTOR.
6. PROVIDE WITH SURFACE MOUNTING KIT WHERE REQUIRED (CUSTOM FABRICATED AS REQUIRED, COLOR MATCH HEATER) AND OR AS DIRECTED BY OWNER REPRESENTATIVE.
7. ELECTRICAL CONTRACTOR SHALL VERIFY CONNECTION REQUIREMENTS (i.e. VOLTAGE, PHASE, MCA, MOCP, ETC.) WITH MECHANICAL SUBMITTALS BEFORE ROUGH IN.

CEILING EXHAUST FAN SCHEDULE

MARK	NOMINAL CFM	TOTAL STATIC PRESSURE IN. W.C.	ELECTRICAL				SOUND RATING SONES	SELECTION BASED ON GREENHECK MODEL	REMARKS
			RATED LOAD WATTS	VOLTS	HERTZ	PHASE			
EF 1	50	0.25	15.2	115	60	1	1.2	SP-B80	3 5 1 4
EF 2	75	0.25	14.3	115	60	1	0.9	SP-A110	2 4 1 3

1. APPROVED MANUFACTURERS: BROAN, FANTECH, ACME, CARNES, PENN, COOK, BREIDERT, COOLAIR, CAPTIVE AIRE, S&P, GREENHECK, TWIN CITY FAN, DELTA BREEZ, AIR KING. (SUBJECT TO PROJECT DOCUMENT CONFORMANCE)
2. CONTROL WITH LIGHTS BY ELECTRICAL CONTRACTOR.
3. EXHAUST FAN SHALL HAVE INTEGRAL BACKDRAFT DAMPER.
4. WITH METAL GRILLE KIT.
5. CONTROL WITH SEPARATE SWITCH BY ELECTRICAL CONTRACTOR.

OUTSIDE AIR BALANCING SCHEDULE

MARK	ZONE/AREA	BALANCE TO CFM	MINIMUM DUCT SIZE	REMARKS VENTILATION RATES PER IMC 403.3 $\left(V_{bz} = R_p P_z + R_a A_z\right)$
F 2	RESIDENT ROOM	30	6"ø	DEDICATED HARD DUCT TO R.A.
F 2.5	SECOND LEVEL	175	8"ø	DEDICATED HARD DUCT TO R.A.
F 3	MAIN LEVEL	200	8"ø	DEDICATED HARD DUCT TO R.A.

ROYAL ENGINEERING
ELECTRICAL
1837 S. EAST BAY BLVD.
PHONE: 801.375.2228
MECHANICAL
PROVO, UTAH 84606
FAX: 801.375.2676

COPYRIGHT© JOB# J24274.00 DATE PLOTTED: 03/19/2025
THESE DOCUMENTS ARE INSTRUMENTS OF PROFESSIONAL SERVICE AND THE INFORMATION CONTAINED HEREIN IS INCOMPLETE UNLESS IN CONJUNCTION WITH ALL OTHER CONTRACT DOCUMENTS. THEY ARE NOT TO BE USED FOR ADMINISTRATIONS, USE OR REPRODUCTION OF THESE DOCUMENTS IN WHOLE OR IN PART WITHOUT ROYAL ENGINEERING'S CONSENT IS IN VIOLATION OF COMMON LAW COPYRIGHT AND OTHER PROPERTY RIGHTS AGREEMENTS OF THE ARCHITECT UNDER 17 U.S.C. PAR. 301 (1991), WHICH PREEMPTS STATE AND LOCAL PUBLIC RECORD ACTS. REFER TO 17 U.S.C. PAR. 301 (1991).

DEKOLD ARCHITECTURE INC.
104 E 600 S #540, Heber City, UT 84032
(208) 206-7338
www.behance.net/kevindekold
kevindekold@hotmail.com

Civil
CACHE LANDMARK
95 W Golf Course Rd St. 101
Logan, UT 84321
(435)713-0099

Landscape
LDG
328 W 200 S #102
Salt Lake City, UT 84101
(435)901-3127

Structural
REAVELEY
675 E 500 S St. 400
Salt Lake City, UT 84102
(801)505-4026

Mechanical
ROYAL
1837 S E Bay Blvd
Provo, UT 84606
(801)375-2228

Electrical
BNA CONSULTING
4225 W Lake Park Blvd St. 275
West Valley City, UT 84121
(435)628-3670

AIS - WEST VALLEY
WEST VALLEY, UT

REVISIONS:

SHEET NUMBER:
M-6.1
03/19/25

11/28/2018 11:04:16 AM

COM*check* Software Version COMcheckWeb

Mechanical Compliance Certificate

Project Information

Energy Code: 2021 IECC
Project Title: AIS West Valley
Location: West Valley City, Utah
Climate Zone: 5b
Project Type: New Construction

Construction Site:

Owner/Agent:
DeKold Architecture
104 E. 600 S. #540
Heber City, Utah 84032

Designer/Contractor:
Royal Engineering
1837 S E Bay Blvd
Provo, Utah 84606

Additional Efficiency Package(s)

Credits: 10.0 Required 0.0 Proposed

Mechanical Systems List

Quantity **System Type & Description**

12 F-2/ CU-2 (Single Zone):
Heating: 1 each - Duct Furnace, Gas, Capacity = 26 kBtu/h
Proposed Efficiency = 95.00% Ec, Required Efficiency: 80.00 % Ec
Cooling: 1 each - Split System, Capacity = 24 kBtu/h, Air-Cooled Condenser, Air Economizer
Proposed Efficiency = 15.00 SEER2, Required Efficiency = 13.40 SEER2
Proposed Part Load Efficiency = 0.00 , Required Part Load Efficiency = 0.00

1 F-2.5/ CU-2.5 (Single Zone):
Heating: 1 each - Duct Furnace, Gas, Capacity = 40 kBtu/h
Proposed Efficiency = 95.00% Ec, Required Efficiency: 80.00 % Ec
Cooling: 1 each - Split System, Capacity = 30 kBtu/h, Air-Cooled Condenser, Unknown Economizer
Proposed Efficiency = 15.00 SEER2, Required Efficiency = 13.40 SEER2
Proposed Part Load Efficiency = 0.00 , Required Part Load Efficiency = 0.00

1 F-2.3/ CU-2.3 (Single Zone):
Heating: 1 each - Duct Furnace, Gas, Capacity = 60 kBtu/h
Proposed Efficiency = 95.00% Ec, Required Efficiency: 80.00 % Ec
Cooling: 1 each - Split System, Capacity = 36 kBtu/h, Air-Cooled Condenser, Unknown Economizer
Proposed Efficiency = 15.00 SEER2, Required Efficiency = 13.40 SEER2
Proposed Part Load Efficiency = 0.00 , Required Part Load Efficiency = 0.00

2 WH-1:
Gas Storage Water Heater, Capacity: 100 gallons, Input Rating: 199 kBtu/h w/ Circulation Pump
Proposed Efficiency: 80.00 % Et, Required Efficiency: 80.00 % Et

Mechanical Compliance Statement

Compliance Statement: The proposed mechanical design represented in this document is consistent with the building plans, specifications, and other calculations submitted with this permit application. The proposed mechanical systems have been designed to meet the 2021 IECC requirements in COM*check* Version COMcheckWeb and to comply with any applicable mandatory requirements listed in the Inspection Checklist.

Preston McConkey - Mechanical Designer — Name - Title
Signature
01/22/2025 — Date

COM*check* Software Version COMcheckWeb

Inspection Checklist

Energy Code: 2021 IECC

Requirements: 0.0% were addressed directly in the COM*check* software

Text in the "Comments/Assumptions" column is provided by the user in the COMcheck Requirements screen. For each requirement, the user certifies that a code requirement will be met and how that is documented, or that an exception is being claimed. Where compliance is itemized in a separate table, a reference to that table is provided.

Section # & Req.ID	Plan Review	Complies?	Comments/Assumptions
C103.2 [PR2][1]	Plans, specifications, and/or calculations provide all information with which compliance can be determined for the mechanical and service water heating systems and document where exceptions to the standard are claimed. Load calculations per acceptable engineering standards and handbooks. Hot water system sized per manufacturer's sizing guide.	☐Complies ☐Does Not ☐Not Observable ☐Not Applicable	
C406 [PR9][1]	Plans, specifications, and/or calculations provide all information with which compliance can be determined for the additional energy efficiency package options.	☐Complies ☐Does Not ☐Not Observable ☐Not Applicable	

Additional Comments/Assumptions:

1 High Impact (Tier 1) 2 Medium Impact (Tier 2) 3 Low Impact (Tier 3)

Section # & Req.ID	Plumbing Rough-In Inspection	Complies?	Comments/Assumptions
C404.5, C404.5.1, C404.5.2 [PL6][3]	Heated water supply piping conforms to pipe length and volume requirements. Refer to section details.	☐Complies ☐Does Not ☐Not Observable ☐Not Applicable	
C404.6.1, C404.6.2 [PL3][1]	Automatic time switches installed to automatically switch off the recirculating hot-water system or heat trace.	☐Complies ☐Does Not ☐Not Observable ☐Not Applicable	
C404.6.3 [PL7][3]	Pumps that circulate water between a heater and storage tank have controls that limit operation from startup to <= 5 minutes after end of heating cycle.	☐Complies ☐Does Not ☐Not Observable ☐Not Applicable	
C404.6.1, C404.6.1.1 [PL8][3]	Demand recirculation water systems have controls that start the pump upon receiving a signal from the action of a user of a fixture or appliance and limits the temperature of the water entering the cold-water piping to 104°F.	☐Complies ☐Does Not ☐Not Observable ☐Not Applicable	

Additional Comments/Assumptions:

1 High Impact (Tier 1) 2 Medium Impact (Tier 2) 3 Low Impact (Tier 3)

Section # & Req.ID	Mechanical Rough-In Inspection	Complies?	Comments/Assumptions
C402.2.6 [ME41][3]	Thermally ineffective panel surfaces of sensible heating panels have insulation >= R-3.5.	☐Complies ☐Does Not ☐Not Observable ☐Not Applicable	
C403.12.3 [ME61][2]	HVAC piping insulation insulated in accordance with Table C403.11.3. Insulation exposed to weather is protected from damage and is provided with shielding from solar radiation.	☐Complies ☐Does Not ☐Not Observable ☐Not Applicable	
C403.8.1 [ME65][3]	HVAC fan systems at design conditions do not exceed allowable fan system motor nameplate hp or fan system bhp.	☐Complies ☐Does Not ☐Not Observable ☐Not Applicable	*See the Mechanical Systems list for values.*
C403.8.3 [ME117][3]	Fans have a fan energy index (FEI) >= 1.00. Variable volume fans will have an FEI >= 0.95.	☐Complies ☐Does Not ☐Not Observable ☐Not Applicable	
C403.8.3 [ME117][3]	Fans have a fan energy index (FEI) >= 1.00. Variable volume fans will have an FEI >= 0.95.	☐Complies ☐Does Not ☐Not Observable ☐Not Applicable	
C403.8.3 [ME117][2]	Fans have a fan energy index (FEI) >= 1.00. Variable volume fans will have an FEI >= 0.95.	☐Complies ☐Does Not ☐Not Observable ☐Not Applicable	
C403.9 [ME144][3]	Large diameter fans where installed shall be tested and labeled in accordance with AMCA 230.	☐Complies ☐Does Not ☐Not Observable ☐Not Applicable	
C403.13.1 [ME71][2]	Systems that heat outside the building envelope are radiant heat systems controlled by an occupancy sensing device or timer switch.	☐Complies ☐Does Not ☐Not Observable ☐Not Applicable	
C403.3 [ME55][2]	HVAC equipment efficiency verified.	☐Complies ☐Does Not ☐Not Observable ☐Not Applicable	*See the Mechanical Systems list for values.*
C403.2.2 [ME59][1]	Natural or mechanical ventilation is provided in accordance with International Mechanical Code Chapter 4. Mechanical ventilation has capability to reduce outdoor air supply to minimum per IMC Chapter 4.	☐Complies ☐Does Not ☐Not Observable ☐Not Applicable	
C403.7.1 [ME59][1]	Demand control ventilation provided for spaces >500 ft2 and >15 people/1000 ft2 occupant density and served by systems with air side economizer, auto modulating outside air damper control, or design airflow >3,000 cfm.	☐Complies ☐Does Not ☐Not Observable ☐Not Applicable	
C403.7.2 [ME115][1]	Enclosed parking garage ventilation has automatic contaminant detection and capacity to stage or modulate fans to 50% or less of design capacity.	☐Complies ☐Does Not ☐Not Observable ☐Not Applicable	

1 High Impact (Tier 1) 2 Medium Impact (Tier 2) 3 Low Impact (Tier 3)

Section # & Req.ID	Mechanical Rough-In Inspection	Complies?	Comments/Assumptions
C403.7.6 [ME141][3]	HVAC systems serving guestrooms in Group R-1 buildings with > 50 guestrooms: Each guestroom is provided with controls that automatically manage temperature setpoint and ventilation (see sections C403.7.6.1 and C403.7.6.2).	☐Complies ☐Does Not ☐Not Observable ☐Not Applicable	
C403.7.4 [ME57][1]	Exhaust air energy recovery on systems meeting Table C403.7.4(1) and C403.7.4(2).	☐Complies ☐Does Not ☐Not Observable ☐Not Applicable	
C403.7.5 [ME116][3]	Kitchen exhaust systems comply with replacement air and conditioned supply air limitations, and satisfy hood rating requirements and maximum exhaust rate criteria.	☐Complies ☐Does Not ☐Not Observable ☐Not Applicable	
C403.12.1, C403.12.2 [ME60][2]	HVAC ducts and plenums insulated in accordance with C403.11.1 and constructed in accordance with C403.11.2, verification may need to occur during Foundation Inspection.	☐Complies ☐Does Not ☐Not Observable ☐Not Applicable	
C403.4.1.4 [ME63][2]	Heating for vestibules and air curtains with integral heating include automatic controls that shut off the heating system when outdoor air temperatures > 45F. Vestibule heating and cooling systems controlled by a thermostat in the vestibule with heating setpoint <= 60F and cooling setpoint >= 80F.	☐Complies ☐Does Not ☐Not Observable ☐Not Applicable	
C403.3.3 [ME35][1]	Hot gas bypass limited to: <=240 kBtu/h – 50% >240 kBtu/h – 25%	☐Complies ☐Does Not ☐Not Observable ☐Not Applicable	
C404.2.1 [ME111][2]	Gas-fired water-heating equipment installed in new buildings: where a singular piece of water-heating equipment >= 1,000 kBtu/h serves the entire building, thermal efficiency >= 92 Et. Where multiple pieces of water-heating equipment serve the building with combined rating >= 1,000 kBtu/h, the combined input-capacity-weighted-average thermal efficiency >= 90 Et. Exclude input rating of equipment in individual dwelling units and equipment <= 100 kBtu/h.	☐Complies ☐Does Not ☐Not Observable ☐Not Applicable	
C408.2.2.1 [ME53][3]	Air outlets and zone terminal devices have means for air balancing.	☐Complies ☐Does Not ☐Not Observable ☐Not Applicable	
C403.11.3.1, C403.11.3.2 [ME123][3]	Refrigerated display cases, walk-in coolers or walk-in freezers served by remote compressors and remote condensers not located in a condensing unit, have fan-powered condensers that comply with Sections C403.11.3.1 and refrigeration compressor systems that comply with C403.11.3.2..	☐Complies ☐Does Not ☐Not Observable ☐Not Applicable	

1 High Impact (Tier 1) 2 Medium Impact (Tier 2) 3 Low Impact (Tier 3)

Additional Comments/Assumptions:

1 High Impact (Tier 1) 2 Medium Impact (Tier 2) 3 Low Impact (Tier 3)

DEKOLD ARCHITECTURE INC.
104 E 600 S #540, Heber City, UT 84032
(208) 206-7338
www.behance.net/kevindekold
kevindekold@hotmail.com

MARK L MAKIN — 5/16/25

Civil — CACHE LANDMARK — 95 W Golf Course Rd St. 101, Logan, UT 84321, (435)713-0099
Landscape — LDG — 328 W 200 S #102, Salt Lake City, UT 84101, (435)901-3127
Structural — REAVELEY — 675 E 500 S St. 400, Salt Lake City, UT 84102, (801)505-4026
Mechanical — ROYAL — 1837 S E Bay Blvd, Provo, UT 84606, (801)375-2228
Electrical — BNA CONSULTING — 4225 W Lake Park Blvd St. 275, West Valley City, UT 84121, (435)628-3670

AIS - WEST VALLEY

WEST VALLEY, UT

REVISIONS:

ROYAL ENGINEERING
ELECTRICAL
1837 S. EAST BAY BLVD.
PHONE: 801.375.2228
MECHANICAL
PROVO, UTAH 84606
FAX: 801.375.2676

COPYRIGHT© JOB# J24274.00 DATE PLOTTED: 03/19/2025
THESE DOCUMENTS ARE INSTRUMENTS OF PROFESSIONAL SERVICE AND THE INFORMATION AND ARCHITECTURAL DESIGNS PRESENTED HEREIN ARE PROTECTED WITH ROYAL ENGINEERING'S INTERPRETATIONS, DECISIONS, OBSERVATIONS AND ADMINISTRATIONS. USE OR REPRODUCTION OF THESE DOCUMENTS IN WHOLE OR IN PART WITHOUT THE WRITTEN PERMISSION OF ROYAL ENGINEERING VIOLATES COPYRIGHTS, STATUTORY AND OTHER RESERVED RIGHTS. REFER TO ACT 17 U.S.C. PAR. 5 1 1 (9 9 1 , WHICH PREEMPTS STATE AND LOCAL PUBLIC RECORD ACTS. REFER TO ACT 17 U.S.C. PAR. 301 (1991).

SHEET NUMBER:
M–7.1
03/19/25

Section # & Req.ID	Rough-In Electrical Inspection	Complies?	Comments/Assumptions
C405.7 [EL26][2]	Low-voltage dry-type distribution electric transformers meet the minimum efficiency requirements of Table C405.6.	☐Complies ☐Does Not ☐Not Observable ☐Not Applicable	
C405.8 [EL27][2]	Electric motors meet the minimum efficiency requirements of Tables C405.7(1) through C405.7(4). Efficiency verified through certification under an approved certification program or the equipment efficiency ratings shall be provided by motor manufacturer (where certification programs do not exist).	☐Complies ☐Does Not ☐Not Observable ☐Not Applicable	
C405.9.1, C405.9.2 [EL28][2]	Escalators and moving walks comply with ASME A17.1/CSA B44 and have automatic controls configured to reduce speed to the minimum permitted speed in accordance with ASME A17.1/CSA B44 or applicable local code when not conveying passengers.	☐Complies ☐Does Not ☐Not Observable ☐Not Applicable	
C405.10 [EL29][2]	Total voltage drop across the combination of feeders and branch circuits <= 5%.	☐Complies ☐Does Not ☐Not Observable ☐Not Applicable	
C405.1.1 [EL30][2]	At least 90% of dwelling unit permanently installed lighting shall have lamp efficacy >= 65 lm/W or luminaires with efficacy >= 45 lm/W or comply with C405.2.4 or C405.3.	☐Complies ☐Does Not ☐Not Observable ☐Not Applicable	
C405.11, C405.11.1 [EL31][2]	50% of 15/20 amp receptacles installed in enclosed offices, conference rooms, copy rooms, break rooms, classrooms and workstations and > 25% of branch circuit feeders for modular furniture will have automatic receptacle control in accordance with C405.11.1.	☐Complies ☐Does Not ☐Not Observable ☐Not Applicable	

Additional Comments/Assumptions:

1 High Impact (Tier 1) 2 Medium Impact (Tier 2) 3 Low Impact (Tier 3)

Section # & Req.ID	Final Inspection	Complies?	Comments/Assumptions
C303.3, C408.2.5.3 [FI8][3]	Furnished O&M manuals for HVAC systems within 90 days of system acceptance.	☐Complies ☐Does Not ☐Not Observable ☐Not Applicable	
C403.1.1 [FI50][3]	HVAC systems and equipment design loads calculated in accordance with ANSI/ASHRAE/ACCA Standard 183 or by an approved equivalent computational procedure	☐Complies ☐Does Not ☐Not Observable ☐Not Applicable	
C403.3.1 [FI27][3]	HVAC systems and equipment capacity does not exceed calculated loads.	☐Complies ☐Does Not ☐Not Observable ☐Not Applicable	
C403.4.1 [FI47][3]	Heating and cooling to each zone is controlled by a thermostat control. Minimum one humidity control device per installed humidification/dehumidification system.	☐Complies ☐Does Not ☐Not Observable ☐Not Applicable	
C403.4.1.2 [FI38][3]	Thermostatic controls have a 5 °F deadband.	☐Complies ☐Does Not ☐Not Observable ☐Not Applicable	
C403.4.1.3 [FI20][3]	Temperature controls have setpoint overlap restrictions.	☐Complies ☐Does Not ☐Not Observable ☐Not Applicable	
C403.4.2 [FI39][3]	Each zone equipped with setback controls using automatic time clock or programmable control system.	☐Complies ☐Does Not ☐Not Observable ☐Not Applicable	
C403.4.2.1, C403.4.2.2 [FI40][3]	Automatic Controls: Setback to 55°F (heat) and 85°F (cool); 7-day clock, 2-hour occupant override, 10-hour backup	☐Complies ☐Does Not ☐Not Observable ☐Not Applicable	
C404.3 [FI11][3]	Heat traps installed on supply and discharge piping of non-circulating systems.	☐Complies ☐Does Not ☐Not Observable ☐Not Applicable	
C404.4 [FI25][2]	All piping insulated in accordance with section details and Table C403.12.3.	☐Complies ☐Does Not ☐Not Observable ☐Not Applicable	
C404.6.1 [FI12][1]	Controls are installed that limit the operation of a recirculation pump installed to maintain temperature of a storage tank. System return pipe is a dedicated return pipe or a cold water supply pipe.	☐Complies ☐Does Not ☐Not Observable ☐Not Applicable	

1 High Impact (Tier 1) 2 Medium Impact (Tier 2) 3 Low Impact (Tier 3)

Section # & Req.ID	Final Inspection	Complies?	Comments/Assumptions
C408.1.1 [FI57][1]	Building operations and maintenance documents will be provided to the owner. Documents will cover manufacturers' information, specifications, programming procedures and means of illustrating to owner how building, equipment and systems are intended to be installed, maintained, and operated.	☐Complies ☐Does Not ☐Not Observable ☐Not Applicable	
C408.2.1 [FI28][1]	Commissioning plan developed by registered design professional or approved agency.	☐Complies ☐Does Not ☐Not Observable ☐Not Applicable	
C408.2.3.1 [FI31][1]	HVAC equipment, systems and system-to-system relationships have been tested to ensure proper operation.	☐Complies ☐Does Not ☐Not Observable ☐Not Applicable	
C408.2.3.2 [FI10][1]	HVAC and service water heating control systems have been tested to ensure proper operation, calibration and adjustment of controls.	☐Complies ☐Does Not ☐Not Observable ☐Not Applicable	
C408.2.4 [FI29][1]	Preliminary commissioning report completed and certified by registered design professional or approved agency.	☐Complies ☐Does Not ☐Not Observable ☐Not Applicable	
C408.2.5 [FI7][1]	Furnished HVAC as-built drawings submitted within 90 days of system acceptance.	☐Complies ☐Does Not ☐Not Observable ☐Not Applicable	
C408.2.5.1 [FI43][1]	An air and/or hydronic system balancing report is provided for HVAC systems.	☐Complies ☐Does Not ☐Not Observable ☐Not Applicable	
C408.2.5.2 [FI30][1]	Final commissioning report due to building owner within 90 days of receipt of certificate of occupancy.	☐Complies ☐Does Not ☐Not Observable ☐Not Applicable	

Additional Comments/Assumptions:

1 High Impact (Tier 1) 2 Medium Impact (Tier 2) 3 Low Impact (Tier 3)

DEKOLD ARCHITECTURE INC.
104 E 600 S #540, Heber City, UT 84032
(208) 206-7338
www.behance.net/kevindekold
kevindekold@hotmail.com

MARK L MANN 9768026 STATE OF UTAH REGISTERED ARCHITECT

Civil
CACHE LANDMARK
95 W Golf Course Rd St. 101
Logan, UT 84321
(435)713-0099

Landscape
LDG
328 W 200 S #102
Salt Lake City, UT 84101
(435)901-3127

Structural
REAVELEY
675 E 500 S St. 400
Salt Lake City, UT 84102
(801)505-4026

Mechanical
ROYAL
1837 S E Bay Blvd
Provo,UT 84606
(801)375-2228

Electrical
BNA CONSULTING
4225 W Lake Park Blvd St. 275
West Valley City, UT 84121
(435)628-3670

AIS - WEST VALLEY

WEST VALLEY, UT

REVISIONS:

SHEET NUMBER:

M–7.2

03/19/25

ROYAL ENGINEERING
ELECTRICAL
1837 S. EAST BAY BLVD.
PHONE: 801.375.2228
MECHANICAL
PROVO, UTAH 84606
FAX: 801.375.2676

COPYRIGHT© JOB# J24274.00 DATE PLOTTED: 03/19/2025
THESE DOCUMENTS ARE INSTRUMENTS OF PROFESSIONAL SERVICE AND THE INFORMATION CONTAINED HEREIN IS INCOMPLETE UNLESS IN CONJUNCTION WITH ROYAL ENGINEERING'S INTERPRETATIONS, DECISIONS, OBSERVATIONS AND OTHER SERVICES. NEITHER ALL NOR ANY PART OF THESE DOCUMENTS MAY BE USED OR IN PART WITHOUT ROYAL ENGINEERING'S CONSENT IS IN VIOLATION OF COMMON LAW COPYRIGHTS, STATUTORY AND OTHER RESERVED RIGHTS. REFER TO ACT 17 U.S.C. PAR. 511 (1990 E), WHICH PRESEMPTS STATE AND LOCAL PUBLIC RECORD ACTS. REFER TO ACT 17 U.S.C. PAR. 301 (1990).

11/28/2018 11:04:16 AM

PLUMBING SYMBOLS

NOTES:
1. ALL SYMBOLS MAY NOT BE USED.
2. DOTTED SYMBOLS INDICATE EXISTING EQUIPMENT, ETC

SS	SANITARY OR WASTE PIPING
	VENT PIPING
CW	COLD WATER PIPING
HW	HOT WATER PIPING
GAS	GAS PIPING
SD	STORM DRAIN PIPING
RD	ROOF DRAIN PIPING
ORD	OVERFLOW ROOF DRAIN PIPING
GR	GREASE PIPING
RW	RECIRCULATION WATER PIPING
	PIPE RISER OR FIXTURE CONNECTION
	WALL HYDRANT/HOSE BIB
	FLOOR DRAIN
	AREA DRAIN
	ROOF DRAIN
ø	ROUND MEASUREMENT.
P-#	PLUMBING FIXTURE SYMBOL
M #	MECHANICAL EQUIPMENT SYMBOL
#	KEYED NOTE REFERENCE
PRV	PRESSURE REDUCING VALVE STATION
	GATE VALVE & BACKFLOW PREVENTOR

DESIGN CONTACTS

PROJECT MANAGER	SAMANTHA KOEPP
MECHANICAL ENGINEER:	MARK MAKIN
PLUMBING DESIGNER:	PRESTON MCCONKEY

PLUMBING SHEET INDEX

SHEET NUMBER	SHEET TITLE
P-0.1	PLUMBING NOTES & LEGENDS
P-1.1	MAIN LEVEL PLUMBING PLAN - WATER & GAS
P-1.2	MAIN LEVEL PLUMBING PLAN - WASTE
P-1.3	SECOND LEVEL PLUMBING PLAN - WATER & GAS
P-1.4	SECOND LEVEL PLUMBING PLAN - WASTE
P-1.5	PLUMBING ROOF PLAN
P-4.1	ENLARGED 1 BEDROOM PLUMBING PLAN
P-5.1	PLUMBING DETAILS
P-5.2	PLUMBING DETAILS
P-6.1	PLUMBING SCHEDULES & SCHEMATICS

PIPING SEISMIC SUPPORT NOTES:

1. PER ASCE STANDARD 7-22 SEISMIC SUPPORTS ARE NOT REQUIRED FOR THE FOLLOWING CONDITION:
   - 1.1. PIPING IS SUPPORTED BY ROD HANGERS 12" OR LESS IN LENGTH FROM THE TOP OF THE PIPE TO THE SUPPORTING STRUCTURE.
   - 1.2. HIGH-DEFORMABILITY PIPING IS USED.
2. IF INSTANCES OCCUR WHERE PIPING IS SUSPENDED BY HANGERS GREATER THAN 12" IN LENGTH. SYSTEM CONNECTORS AND COMPONENTS SHALL BE COMPATIBLE AND DESIGNED FOR THE APPLICATION THAT THEY ARE USED FOR. SHALL HAVE A MINIMUM OF TWO TRANSVERSE BRACES PER STRAIGHT PIPING RUN. THE MAXIMUM DISTANCE BETWEEN TRANSVERSE BRACES WILL BE DETERMINED BY PIPE SIZE AND PIPING COMPOSITION. SHALL HAVE A MINIMUM OF ONE LONGITUDINAL BRACE PER STRAIGHT DUCT RUN. IF LENGTH OF PIPING EXCEEDS LONGITUDINAL BRACE SPACING, ADDITIONAL LONGITUDINAL BRACES WILL BE REQUIRED.
3. FOR SEISMIC BRACING OF PLUMBING EQUIPMENT AND PIPING AN INDEPENDENT SEISMIC AND VIBRATION CONTROL SUBCONTRACTOR WITH EXPERIENCE, COMPUTING CAPABILITIES, AND MANUFACTURED PRODUCTS SHALL BE FURNISHED BY PLUMBING CONTRACTOR. INDEPENDENT SEISMIC CONSULTANT SHALL PROVIDE REQUIRED COMPUTATIONS, SHOP DRAWINGS, AND MANUFACTURED PRODUCTS TO MEET THE MINIMUM REQUIREMENTS OF ASCE 7-22 AND INTERNATIONAL BUILDING CODES (LATEST ADOPTED EDITION) FOR THE RESPECTIVE SEISMIC DESIGN FOR SEISMIC ZONE WITH IMPORTANCE FACTOR 1.5. SEISMIC SUBCONTRACTOR SHALL EXERCISE THE QUALITY CONTROL FOR THIS WORK AND SHALL NOT BE LIMITED TO INSTRUCTIONS DIRECTED TO THE PLUMBING CONTRACTOR. THE SEISMIC SUBCONTRACTOR SHALL CERTIFY IN WRITING THAT THEY HAVE INSPECTED THE INSTALLATION AND THAT ALL ISOLATION ANCHORS AND SEISMIC RESTRAINT MATERIALS ARE INSTALLED CORRECTLY AND FUNCTIONING PROPERLY. CERTIFICATION SHALL BE PROVIDED AFTER ALL CORRECTIVE WORK HAS BEEN COMPLETED

SUBMITTAL NOTES:

1. CONTRACTOR TO ALLOW 10 WORKING DAYS FOR SUBMITTAL TURNAROUND.
2. CONTRACTOR TO PROVIDE SUBMITTALS FOR ALL EQUIPMENT AND MATERIALS IN A SINGLE PACKAGE. PIECEMEAL SUBMITTALS WILL BE RETURNED WITH A NOTE TO REVISE AND RESUBMIT.
3. SUBMITTALS WILL BE CHECKED FOR COMPLIANCE WITH CAPACITY REQUIREMENTS AND ELECTRICAL REQUIREMENTS. CONTRACTOR TO VERIFY THAT WEIGHTS, DIMENSIONS, AND DUCT CONNECTIONS ON SUBMITTED EQUIPMENT IS CONSISTENT WITH SCHEDULED EQUIPMENT PRIOR TO SUBMITTAL. CHANGES IN SCOPE BROUGHT ABOUT BY SUBMITTED EQUIPMENT THAT DOES NOT COMPLY WITH THE WEIGHTS, DIMENSIONS, OR CONNECTION LOCATIONS ON SCHEDULED EQUIPMENT SHALL BE THE SOLE RESPONSIBILITY OF THE CONTRACTOR.

APPLICABLE CODES

- 2021 INTERNATIONAL MECHANICAL CODE (IMC)
- 2021 INTERNATIONAL BUILDING CODE (IBC)
- 2021 INTERNATIONAL ENERGY CONSERVATION CODE (IECC)
- 2021 INTERNATIONAL PLUMBING CODE (IPC)
- 2021 INTERNATIONAL FUEL GAS CODE (IFGC)
- ASHRAE 90.1 - 2022

NOTE: CURRENT CODES ADOPTED BY THE RESPECTIVE JURISDICTION WILL SUPERCEDE THIS LIST OF CODES.

PROJECT PLUMBING NOTES:

1. SEE PIPING SCHEMATIC(S) FOR ADDITIONAL INFORMATION ON WASTE & VENT, GAS, AND CULINARY WATER PIPING DIAMETERS.
2. COORDINATE ALL WORK WITH OTHER TRADES AS REQUIRED. CONCEAL ALL PIPING IN FINISHED AREAS.
3. PROVIDE AND INSTALL ALL REQUIRED VALVES IN PIPING SYSTEM.
4. PROVIDE AND INSTALL NEW 1-1/2" WATER METER WITH 2"ø MAIN WATER SUPPLY LINE. PROVIDE AND INSTALL MAIN SHUT-OFF, PRV, ETC. (FIELD VERIFY LOCATION WITH SITE CONDITIONS AND OWNER REPRESENTATIVE.)
5. PROVIDE AND INSTALL 4"ø SEWER LINE. FIELD LOCATE. MAKE CONNECTION TO COMPLETE BUILDING SEWER SYSTEM. VERIFY ALL INVERT ELEVATIONS AND ALL REQUIREMENTS WITH OWNER REPRESENTATIVE AND CIVIL PLANS.
6. FIELD LOCATE NEW 2 POUND GAS METER. VERIFY LOCATION AND ALL REQUIREMENTS WITH GAS COMPANY.
7. WHERE REQUIRED PLUMBING CONTRACTOR SHALL PROVIDE AND INSTALL 2 POUND TO 4 OUNCE PRESSURE REGULATORS WITH LEAK-LIMITING DEVICE AND TEST TEE FITTING. IFGC 410.
8. INSULATE ALL HOT AND COLD WATER PIPING PER APPLICABLE CODES. ALL EXPOSED HOT AND COLD WATER PIPING SHALL BE INSULATED. INSULATE HOT WATER PIPING THAT IS PLACED IN UN-INSULATED INTERIOR WALLS. EXCEPTION: VERTICAL AND HORIZONTAL COLD WATER PIPING LOCATED INSIDE OF INTERIOR WALLS MAY HAVE THE INSULATION OMITTED.
9. MAKE PROVISIONS FOR A BARRIER-TYPE TRAP SEAL PROTECTION (I.E. TRAP GUARD) WHERE NOTED AND/OR CALLED FOR.
10. PIPING LOCATIONS ARE GRAPHICALLY SHOWN. PLUMBING CONTRACTOR SHALL DETERMINE ACTUAL PIPE ROUTING IN FIELD PER AVAILABLE SPACE AND BUILDING CONSTRUCTION.
11. NOT ALL CLEANOUTS ARE SHOWN. PROVIDE AND INSTALL ALL REQUIRED CLEANOUTS. CLEANOUTS FOR HORIZONTAL DRAINS SHALL BE INSTALLED NO MORE THAN 100' APART. CLEANOUTS SHALL BE INSTALLED AT EACH CHANGE OF DIRECTION GREATER THAN 45°. A CLEAN-OUT SHALL BE PROVIDED AT THE BASE OF EACH WASTE OR SOIL STACK. CLEANOUTS SHALL BE ACCESSIBLE AND THE SAME SIZE AS THE WASTE LINES ON WHICH THEY ARE INSTALLED.
12. COORDINATE WITH OTHER TRADES TO ENSURE AND ALL PLUMBING VENTS ARE A MINIMUM OF 10-FEET FROM ALL FRESH AIR INTAKES.
13. WATER PIPING MATERIAL SHALL MEET THE STANDARDS SET FORTH IN 2021 IPC TABLES 605.3, 605.4 & 605.5.
14. SANITARY WASTE AND VENT PIPING MATERIAL SHALL MEET THE STANDARDS SET FORTH IN 2021 IPC TABLES 702.1, 702.2 AND 702.3 & 702.4.
15. NATURAL GAS PIPING MATERIAL SHALL MEET THE STANDARDS SET FORTH IN 2021 IFGC SECTION 403.
16. PROVIDE AND INSTALL WATER HAMMER ARRESTORS WHERE QUICK-CLOSING VALVES ARE UTILIZED. THIS INCLUDES BUT IS NOT LIMITED TO: ICE MAKERS, DISHWASHERS, AND CLOTHES WASHERS.
17. PROVIDE AND INSTALL MARKING/LOCATING TAPE FOR ALL BURIED GAS LINES.
18. PLUMBING CONTRACTOR SHALL PROVIDE AND INSTALL WATER TEMPERING DEVICE (SHALL CONFORM TO ASSE 1070) FOR ALL HAND WASH AREAS IN PROJECT. HOT WATER TEMPERATURE SHALL HAVE A MAXIMUM TEMPERATURE OF 110° F. 2021 IPC 607.1.2. (PUBLIC HAND WASH)
19. SHOWER CONTROL VALVES. INDIVIDUAL SHOWER AND TUB/SHOWER COMBINATION VALVES SHALL BE EQUIPPED WITH CONTROL VALVES OF THE PRESSURE-BALANCE, THERMOSTATIC-MIXING OR COMBINATION PRESSURE-BALANCE/ THERMOSTATIC-MIXING VALVE TYPES WITH A HIGH LIMIT STOP IN ACCORDANCE WITH ASSE 1016. THE HIGH LIMIT STOP SHALL BE SET TO LIMIT WATER TEMPERATURE TO A MAXIMUM OF 120°F. IN-LINE THERMOSTATIC VALVES SHALL NOT BE USED TO MEET THIS REQUIREMENT (2021 IPC 412.3, 2021 IRC P2708.4). INSTALL SHOWER HEADS 80" ABOVE FINISHED FLOOR.

PROJECT PLUMBING NOTES:

20. PLUMBING CONTRACTOR SHALL PROVIDE AND INSTALL ONE SUMP PUMP IN EACH ELEVATOR PIT. COMPLETE SUMP PUMP DISCHARGE CONNECTION TO THE BUILDING DRAINAGE SYSTEM. AN APPROVED ALARM SYSTEM WILL BE USED IN PLACE OF THE OIL SEPARATOR. 2021 IPC 1003.4. DESIGN GUIDE: STANCOR SE-50 OR EQUAL WITH FLOAT AND OIL MINDER.
21. FOR PROJECTS LOCATED IN UTAH THE PLUMBING CONTRACTOR IS RESPONSIBLE TO PROVIDE LOW NOx LISTED GAS FIRED WATER HEATERS WITH A LIMIT OF NITROGEN OXIDE TO 14 NANOGRAMS PER JOULE OF HEAT OUTPUT OR 20 PPM (CORRECTED TO 3% OXYGEN). COORDINATION WITH MECHANICAL CONTRACTOR FOR FLUE/PIPING INSTALLATION WILL BE REQUIRED.
22. THE PLUMBING CONTRACTORS SHALL ENSURE THAT LENGTH OF VENT PIPING FOR ALL WATER HEATERS WITH POWER DIRECT EXHAUST DOES NOT EXCEED MANUFACTURERS SPECIFICATIONS. IF THE VENT WILL EXCEED MANUFACTURERS RECOMMENDED VENTING LENGTH WATER HEATERS CAPABLE OF SIDEWALL VENT PIPING WILL BE REQUIRED. COORDINATION FINAL VENTING LOCATION WITH OWNER REPRESENTATIVE.
23. PLUMBING CONTRACTOR SHALL PROVIDE AND INSTALL A CHECK VALVE AND SHUT-OFF VALVE AT EACH UNIT. SEE PLUMBING FLOOR PLANS FOR SIZING AND PLUMBING SCHEMATICS FOR ADDITIONAL INFORMATION.
24. PLUMBING CONTRACTOR TO PROVIDE AND INSTALL A BACK-FLOW PREVENTER AND SHUT-OFF VALVE AT ALL HOSE BIB LOCATIONS.
25. PAINT ALL EXTERIOR GAS PIPING WITH WEATHER RESISTANT PAINT.
26. PLUMBING CONTRACTOR SHALL PROVIDE AND INSTALL WATER HEATER VENTING PER MANUFACTURERS RECOMMENDATIONS. COORDINATE TERMINATION LOCATIONS WITH MECHANICAL CONTRACTOR FOR ALL REQUIRED CLEARANCES PER CURRENT BUILDING CODES (IE. 10' FROM ALL FRESH AIR INTAKES AND 3' FROM ALL OPERABLE OPENINGS).
27. THERMAL AND SOUND INSULATION AND COVERINGS, LININGS, AND ADHESIVES (WHEN USED) INSTALLED IN CONCEALED AND EXPOSED SPACE SHALL HAVE A FLAME SPREAD INDEX OF 25 OR LESS AND A SMOKE-DEVELOPED INDEX OF 50 OR LESS WHEN TESTING IN ACCORDANCE WITH ASTM E 84.
28. FOR AUTOMATIC HOT WATER AND HEAT-TRACED SYSTEMS, PIPING SHALL BE INSULATED WITH NOT LESS THAN 1 INCH OF INSULATION HAVING A CONDUCTIVITY NOT EXCEEDING 0.27 BTU PER INCH/h x FT² x °F. THE FIRST 8 FEET OF PIPING IN NOT-HOT-WATER-SUPPLY TEMPERATURE MAINTENANCE SYSTEMS SERVED BY EQUIPMENT WITHOUT INTEGRAL HEAT TRAPS SHALL BE INSULATED WITH 0.5 INCH OF MATERIAL HAVING A CONDUCTIVITY NOT EXCEEDING 0.27 BTU PER INCH/h x FT² x °F. (2021 IECC SECTION C404.5)
29. CONTRACTOR SHALL VERIFY LOCATION, SIZE, AND DEPTH OF ALL UTILITIES PRIOR TO BEGINNING OF CONSTRUCTION.
30. PLUMBING CONTRACTOR SHALL PROVIDE AND INSTALL HEAT TRACE AND INSULATION FOR ALL PIPING INSTALLED IN AN UNCONDITIONED SPACE. HEAT TRACE DESIGN GUIDE: CHROMALOX OR RAYCHEM, 8W/FT MINIMUM WITH MONITORING SYSTEM (CHROMALOX ITAS/ITLS OR SIMILAR).
31. PROVIDE AND INSTALL SOUND INSULATION ON ANY DRAIN LINE THAT TRANSITIONS ABOVE OCCUPIED SPACES.
32. ALL DWV PIPING SHALL HAVE HOLDRITE SILENCER SERIES FELT 100 WITH NEOPRENE PADS (EQUAL TO HOLDRITE SERIES 274-278).
33. ALL PUMPS SHALL BE ISOLATED WITH A SPRING HAVING 1" MINIMUM STATIC DEFLECTION AND EQUAL TO MASON INDUSTRIES TYPE SLR.
34. ALL SUPPLY PIPING SHALL HAVE HOLDRITE SILENCER SERIES ACOUSTIC ISOLATION.
35. TRENCHING FOR PLUMBING TO BE INSTALLED PARALLEL TO FOOTINGS AND WALLS SHALL NOT EXTEND INTO THE 45-DEGREE BEARING PLANE OF ALL FOOTINGS AS PER IBC 2604.4 AND IPC 307.5.

DEKOLD ARCHITECTURE INC.
104 E 600 S #540, Heber City, UT 84032
(208) 206-7338
www.behance.net/kevindekold
kevindekold@hotmail.com

MARK L MAKIN
STATE OF UTAH
REGISTERED ENGINEER

Civil — CACHE LANDMARK — 95 W Golf Course Rd St. 101, Logan, UT 84321 — (435)713-0099
Landscape — LDG — 328 W 200 S #102, Salt Lake City, UT 84101 — (435)901-3127
Structural — REAVELEY — 675 E 500 S St. 400, Salt Lake City, UT 84102 — (801)505-4026
Mechanical — ROYAL — 1837 S E Bay Blvd, Provo, UT 84606 — (801)375-2228
Electrical — BNA CONSULTING — 4225 W Lake Park Blvd St. 275, West Valley City, UT 84121 — (435)628-3670

REVISIONS:

SHEET NUMBER:
P-0.1
03/19/25

ROYAL ENGINEERING
ELECTRICAL
1837 S. EAST BAY BLVD.
PHONE: 801.375.2228
MECHANICAL
PROVO, UTAH 84606
FAX: 801.375.2676

COPYRIGHT© JOB# J24274.00 DATE PLOTTED: 03/19/2025
THESE DOCUMENTS ARE INSTRUMENTS OF PROFESSIONAL SERVICE AND THE INFORMATION CONTAINED HEREIN IS INCOMPLETE UNLESS IN CONJUNCTION WITH ROYAL ENGINEERING'S INTERPRETATIONS, DECISIONS, OBSERVATIONS AND RESPONSIVE ACTIONS. THESE DOCUMENTS SHALL NOT BE USED IN WHOLE OR IN PART WITHOUT ROYAL ENGINEERING'S CONSENT IS IN VIOLATION OF COMMON LAW COPYRIGHTS, STATUTORY AND OTHER RESERVED RIGHTS. REFER TO ACT 17 U.S.C. PAR. 511 (1978 V.), WHICH PREEMPTS STATE AND LOCAL PUBLIC RECORD ACTS. REFER TO ACT 17 U.S.C. PAR. 301 (1991).

PLUMBING KEYED NOTES:

SEE ENLARGED UNIT PLAN FOR PLUMBING DESIGN IN THIS AREA.

1 FIELD VERIFY EXACT LOCATION OF DOMESTIC WATER LINE. SEE WATER PIPING SCHEMATICS FOR METER AND PIPING SIZING. SEE CIVIL UTILITES PLAN FOR CONTINUATION.

2 PROPOSED LOCATION FOR PRV STATION, CHECK VALVE/BACKFLOW PREVENTION, AND MAIN BUILDING SHUT-OFF VALVE. INSTALL 2" WATER PIPING RISER TO CEILING SPACE FOR BUILDING DISTRIBUTION. SEE PLUMBING DETAILS & SCHEMATICS.

3 SEE ENLARGED UNIT PLAN FOR PLUMBING DESIGN IN THIS AREA.

4 PROPOSED LOCATION OF 3/4" WATER LINE, 3/4" HOT WATER LINNE, 3/4" HOT WATER RETURN LINE, AND 1/2" GAS LINE FROM MAIN BUILDING SUPPLY LOOP. PROVIDE AND INSTALL UNIT SHUT-OFF AND CHECK VALVE WITHIN UNIT. PROVIDE AND INSTALL ACCESS COVER (FIRE RATED AS REQUIRED).

5 PROPOSED LOCATION OF 2" WATER LINE TO LEVEL ABOVE. FIELD VERIFY EXACT LOCATION WITH STRUCTURE.

6 PROPOSED LOCATION FOR GAS METER. COORDINATE LOCATION AND ALL REQUIREMENTS WITH GAS COMPANY.

7 PROPOSED LOCATION OF 1" HOT WATER LINE FROM SECOND LEVEL. FIELD VERIFY EXACT LOCATION WITH STRUCTURE.

8 PROPOSED LOCATION OF 1" GAS PIPING TO LEVEL ABOVE. FIELD VERIFY EXACT LOCATION WITH STRUCTURE.

9 ANTICIPATED LOCATION OF OWNER PROVIDED OUTDOOR GRILL. PROVIDE AND INSTALL SHUT-OFF VALVE AND PRESSURE REGULATOR. FIELD VERIFY EXACT LOCATION WITH OWNERS REPRESENTATIVE.

10 PROVIDE AND INSTALL SHUTOFF ON BUILDING EXTERIOR (ABOVE GRADE).

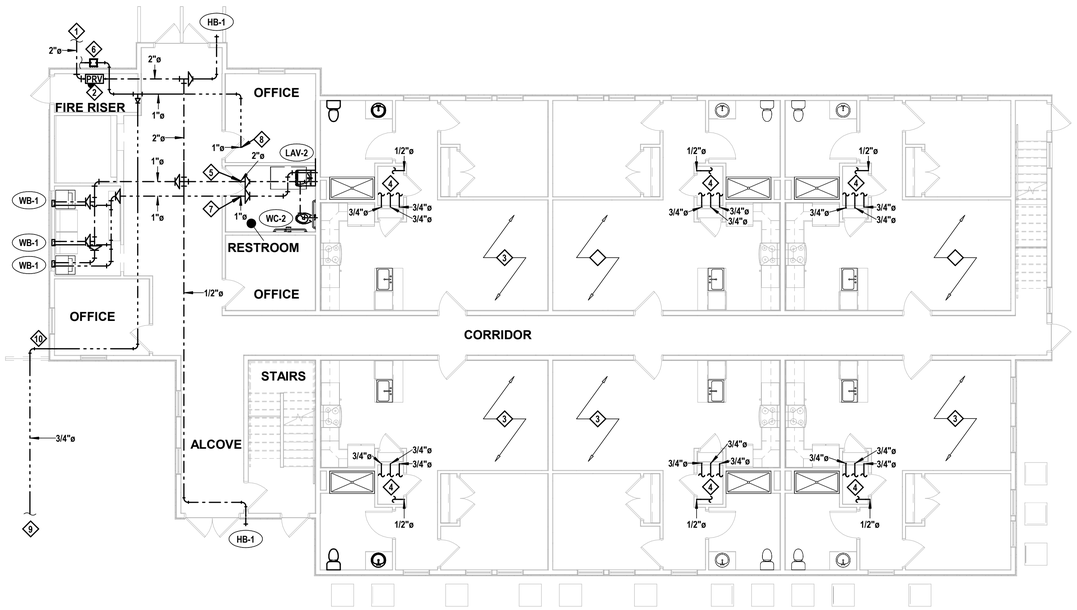

MAIN LEVEL PLUMBING FLOOR PLAN - WATER & GAS

SCALE: 1/8" = 1'-0"

DEKOLD ARCHITECTURE INC.
104 E 600 S #540, Heber City, UT 84032
(208) 206-7338
www.behance.net/kevindekold
kevindekold@hotmail.com



Civil
CACHE LANDMARK
95 W Golf Course Rd St. 101
Logan, UT 84321
(435)713-0099

Landscape
CACHE LANDMARK
95 W Golf Course Rd St. 101
Logan, UT 84321
(435)713-0099

Structural
REAVELEY
675 E 500 S ST. 400
Salt Lake City, UT 84102
(801)505-4026

Mechanical
ROYAL
1837 S E Bay Blvd
Provo, UT 84606
(801)375-2228

Electrical
BNA CONSULTING
4225 W Lake Park Blvd St. 275
West Valley City, UT 84121
(435)628-3670

AIS - WEST VALLEY

WEST VALLEY, UT

REVISIONS:

SHEET NUMBER:

P-1.1

03/19/25

ROYAL ENGINEERING
ELECTRICAL
1837 S. EAST BAY BLVD.
PHONE: 801.375.2228
MECHANICAL
PROVO, UTAH 84606
FAX: 801.375.2676

COPYRIGHT © JOB# J24274.00 DATE PLOTTED: 03/19/2025

THESE DOCUMENTS ARE INSTRUMENTS OF PROFESSIONAL SERVICE AND THE INFORMATION CONTAINED HEREIN IS INCOMPLETE UNLESS IN CONJUNCTION WITH ROYAL ENGINEERING'S INTERPRETATIONS, DECISIONS, OBSERVATIONS AND ADMINISTRATIONS. USE OR REPRODUCTION OF THESE DOCUMENTS IN WHOLE OR IN PART WITHOUT ROYAL ENGINEERING'S CONSENT IS IN VIOLATION OF COMMON LAW COPYRIGHTS, STATUTORY AND OTHER RESERVED RIGHTS. REFER TO ACT 17 U.S.C. PAR. 301 (1991). WHICH PREEMPTS STATE AND LOCAL PUBLIC RECORD ACTS. REFER TO ACT 17 U.S.C. PAR. 301 (1991).

3/7/2025 2:03:08 PM

PLUMBING KEYED NOTES:

SEE ENLARGED UNIT PLAN FOR PLUMBING DESIGN IN THIS AREA.

1 FIELD VERIFY 4" SEWER LINE CONNECTION LOCATION AND INVERT DEPTH WITH CIVIL UTILITIES. FINAL ROUTING DETERMINED IN FIELD WITH STRUCTURE AND SITE CONDITIONS.

2 SEE ENLARGED UNIT PLAN FOR PLUMBING DESIGN IN THIS AREA.

3 PROPOSED LOCATION OF 3" SANITARY SEWER DROP FROM LEVEL ABOVE. SEE PLUMBING SCHEMATICS FOR STACK SIZING AND VENT SIZING. MINOR ALIGNMENT ADJUSTMENTS MAY BE REQUIRED FIELD VERIFY FINAL LOCATION WITH STRUCTURE.

4 PROPOSED LOCATION OF 3" SANITARY SEWER DROP FROM LEVEL ABOVE. SEE PLUMBING SCHEMATICS FOR STACK SIZING AND VENT SIZING. FIELD VERIFY FINAL LOCATION WITH STRUCTURE.

5 PROPOSED LOCATION FOR 3" OVERFLOW ROOF DRAIN LINE DROP FROM ROOF. SEE ROOF PLAN FOR CONTINUATION. COORDINATE FINAL LOCATION IN FIELD WITH STRUCTURE.

6 PROPOSED LOCATION FOR 3" ROOF DRAIN LINE DROP FROM ROOF. SEE ROOF PLAN FOR CONTINUATION. COORDINATE FINAL LOCATION IN FIELD WITH STRUCTURE.

7 CONNECT ROOF DRAIN TO STORM SEWER. FIELD VERIFY LOCATION WITH CIVIL UTILITIES.

8 PROVIDE AND INSTALL COWS TONGUE FOR OVERFLOW ROOF DRAIN. DISCHARGE OVERFLOW 18" ABOVE FINISHED GRADE. VERIFY FINAL LOCATION WITH OWNERS REPRESENTATIVE AND STRUCTURE.

9 PROPOSED LOCATION OF 2" SANITARY SEWER DROP FROM LEVEL ABOVE. SEE PLUMBING SCHEMATICS FOR STACK SIZING AND VENT SIZING. FIELD VERIFY FINAL LOCATION WITH STRUCTURE.

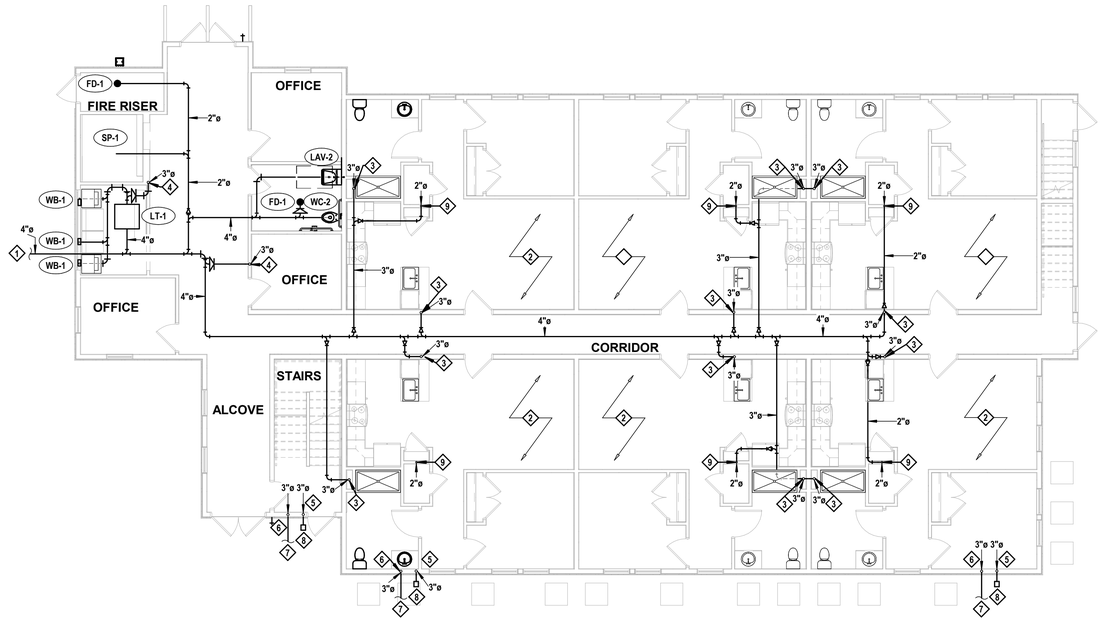

MAIN LEVEL PLUMBING FLOOR PLAN - WASTE

SCALE: 1/8" = 1'-0"

DEKOLD ARCHITECTURE INC.
104 E 600 S #540, Heber City, UT 84032
(208) 206-7338
www.behance.net/kevindekold
kevindekold@hotmail.com



Electrical
BNA CONSULTING
4225 W Lake Park Blvd St. 275
West Valley City, UT 84121
(435)628-3670

Mechanical
ROYAL
1837 S E Bay Blvd
Provo, UT 84606
(801)375-2228

Structural
REAVELEY
675 E 500 S ST. 400
Salt Lake City, UT 84102
(801)505-4026

Landscape
CACHE LANDMARK
95 W Golf Course Rd St. 101
Logan, UT 84321
(435)713-0099

Civil
CACHE LANDMARK
95 W Golf Course Rd St. 101
Logan, UT 84321
(435)713-0099

AIS - WEST VALLEY

WEST VALLEY, UT

REVISIONS:

ROYAL ENGINEERING
ELECTRICAL
1837 S. EAST BAY BLVD.
PHONE: 801.375.2228
MECHANICAL
PROVO, UTAH 84606
FAX: 801.375.2676

COPYRIGHT © JOB# J24274.00 DATE PLOTTED: 03/19/2025

THESE DOCUMENTS ARE INSTRUMENTS OF PROFESSIONAL SERVICE AND THE INFORMATION CONTAINED HEREIN IS INCOMPLETE UNLESS IN CONJUNCTION WITH ROYAL ENGINEERING'S INTERPRETATIONS, DECISIONS, OBSERVATIONS AND ADMINISTRATIONS. USE OR REPRODUCTION OF THESE DOCUMENTS IN WHOLE OR IN PART WITHOUT ROYAL ENGINEERING'S CONSENT IS IN VIOLATION OF COMMON LAW COPYRIGHTS, STATUTORY AND OTHER RESERVED RIGHTS. REFER TO ACT 17 U.S.C. PAR. 511 (1991). WHICH PREEMPTS STATE AND LOCAL PUBLIC RECORD ACTS. REFER TO ACT 17 U.S.C. PAR. 301 (1991).

SHEET NUMBER:

P-1.2

03/19/25

3/7/2025 2:03:09 PM

PLUMBING KEYED NOTES:

1. SEE ENLARGED UNIT PLAN FOR PLUMBING DESIGN IN THIS AREA.
2. PROPOSED LOCATION OF 3/4" CULINARY WATER PIPING, 3/4" HOT WATER PIPING AND 3/4" HOT WATER RETURN PIPING RISER FROM ADJACENT LEVEL FROM MAIN BUILDING SUPPLY LOOP.
3. PROPOSED LOCATION OF 3/4" WATER LINE, 3/4" HOT WATER LINNE, 3/4" HOT WATER RETURN LINE, AND 1/2" GAS LINE FROM MAIN BUILDING SUPPLY LOOP. PROVIDE AND INSTALL UNIT SHUT-OFF AND CHECK VALVE WITHIN UNIT. PROVIDE AND INSTALL ACCESS COVER (FIRE RATED AS REQUIRED).
4. PROPOSED LOCATION OF 2" WATER LINE FROM LEVEL BELOW. FIELD VERIFY EXACT LOCATION WITH STRUCTURE.
5. PROPOSED LOCATION OF 1" HOT WATER LINE TO LEVEL BELOW. FIELD VERIFY EXACT LOCATION WITH STRUCTURE.
6. PROPOSED LOCATION OF 1" GAS PIPING FROM LEVEL BELOW. FIELD VERIFY EXACT LOCATION WITH STRUCTURE.

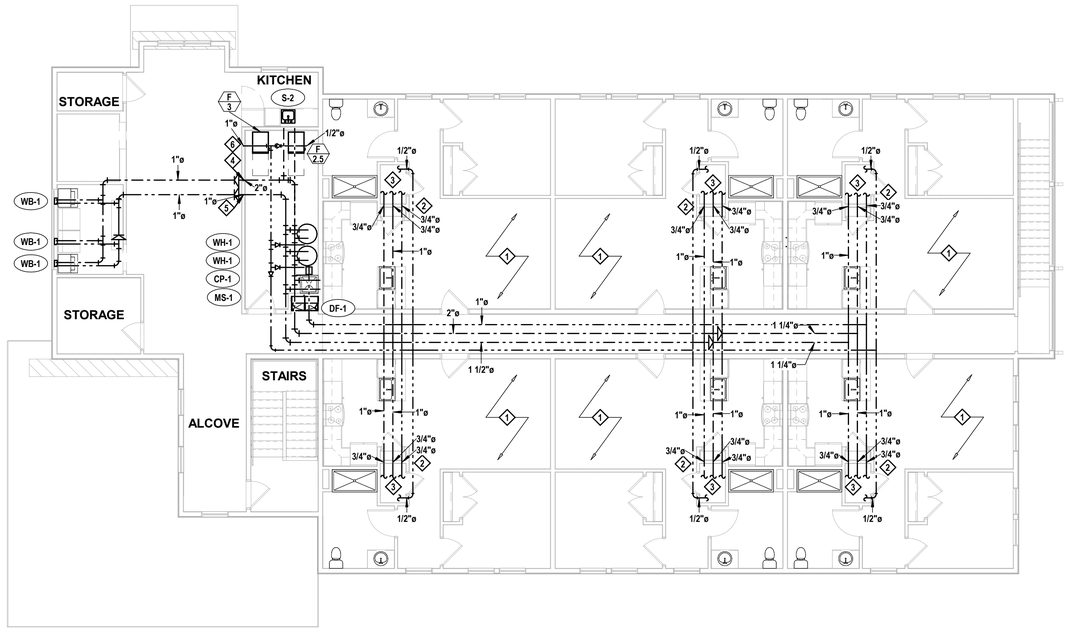

N

SECOND LEVEL PLUMBING FLOOR PLAN - WATER & GAS

SCALE: 1/8" = 1'-0"

DEKOLD ARCHITECTURE INC.
104 E 600 S #540, Heber City, UT 84032
(208) 206-7338
www.behance.net/kevindekold
kevindekold@hotmail.com

MARK L MAKIN 3/14/25

Landscape	CACHE LANDMARK	95 W Golf Course Rd St. 101	Logan, UT 84321 (435)713-0099
Civil	CACHE LANDMARK	95 W Golf Course Rd St. 101	Logan, UT 84321 (435)713-0099
Structural	REAVELEY	675 E 500 S ST. 400	Salt Lake City, UT 84102 (801)505-4026
Mechanical	ROYAL	1837 S E Bay Blvd	Provo, UT 84606 (801)375-2228
Electrical	BNA CONSULTING	4225 W Lake Park Blvd St. 275	West Valley City, UT 84121 (435)628-3670

AIS - WEST VALLEY
WEST VALLEY, UT

REVISIONS:

SHEET NUMBER:
P-1.3
03/19/25

ROYAL ENGINEERING
ELECTRICAL
1837 S. EAST BAY BLVD.
PHONE: 801.375.2228
MECHANICAL
PROVO, UTAH 84606
FAX: 801.375.2676

COPYRIGHT © JOB# J24274.00 DATE PLOTTED: 03/19/2025
THESE DOCUMENTS ARE INSTRUMENTS OF PROFESSIONAL SERVICE AND THE INTELLIGENCE EXHIBITED THEREIN SHALL NOT BE USED IN ANY WAY WITH OUT ROYAL ENGINEERING'S EXPRESSED WRITTEN CONSENT. ALL DRAWINGS, SPECIFICATIONS, MODELS, RECORDINGS, DATA AND COPYRIGHTS ARE RESERVED BY ROYAL ENGINEERING AND SHALL REMAIN THE PROPERTY OF ROYAL ENGINEERING. ALL RIGHTS ARE RESERVED UNDER FEDERAL, STATE AND COMMON LAW. ANY UNAUTHORIZED USE, INTERPRETATION, MODIFICATION, DISTRIBUTION OR ADMINISTRATION, USE OR REPRODUCTION OF THESE DOCUMENTS IN WHOLE OR IN PART WITHOUT ROYAL ENGINEERING'S CONSENT IS IN VIOLATION OF COMMON LAW AND STATUTORY LAWS AND STATE RESERVED RIGHTS; REFERENCE 17 U.S.C. SEC. 101 (1990) 1, STATUTORY AND OTHER RESERVED RIGHTS; REFERENCE 17 U.S.C. SEC. 101 (1990) 1, FREEDOMS STATE AND LOCAL PUBLIC RECORD ACTS; REFER TO ACT 17 U.S.C. PAR. 301 (1990) 1.

3/7/2025 2:03:10 PM

PLUMBING KEYED NOTES:

1. PROPOSED LOCATION OF 3" SANITARY SEWER DROP TO LEVEL BELOW. SEE PLUMBING SCHEMATICS FOR STACK SIZING AND VENT SIZING. FIELD VERIFY FINAL LOCATION WITH STRUCTURE.
2. PROPOSED LOCATION OF 3" SANITARY SEWER DROP FROM LEVEL ABOVE. SEE PLUMBING SCHEMATICS FOR STACK SIZING AND VENT SIZING. FIELD VERIFY FINAL LOCATION WITH STRUCTURE.
3. SEE ENLARGED UNIT PLAN FOR PLUMBING DESIGN IN THIS AREA.
4. PROPOSED LOCATION FOR 3" OVERFLOW ROOF DRAIN LINE DROP TO MAIN FLOOR. SEE MAIN FLOOR PLAN FOR CONTINUATION. COORDINATE FINAL LOCATION IN FIELD WITH STRUCTURE.
5. PROPOSED LOCATION FOR 3" ROOF DRAIN LINE DROP TO MAIN FLOOR. SEE MAIN FLOOR PLAN FOR CONTINUATION. COORDINATE FINAL LOCATION IN FIELD WITH STRUCTURE.
6. PROPOSED LOCATION OF 2" SANITARY SEWER DROP TO LEVEL BELOW. SEE PLUMBING SCHEMATICS FOR STACK SIZING AND VENT SIZING. FIELD VERIFY FINAL LOCATION WITH STRUCTURE.
7. PROVIDE AND INSTALL WATER HEATER VENTING TO EXTERIOR PER MANUFACTURERS RECOMMENDATIONS. FEILD VERIFY EXACT LOCATION WITH OWNERS REPRESENTATIVE AND STRUCTRURE. PLUMBING

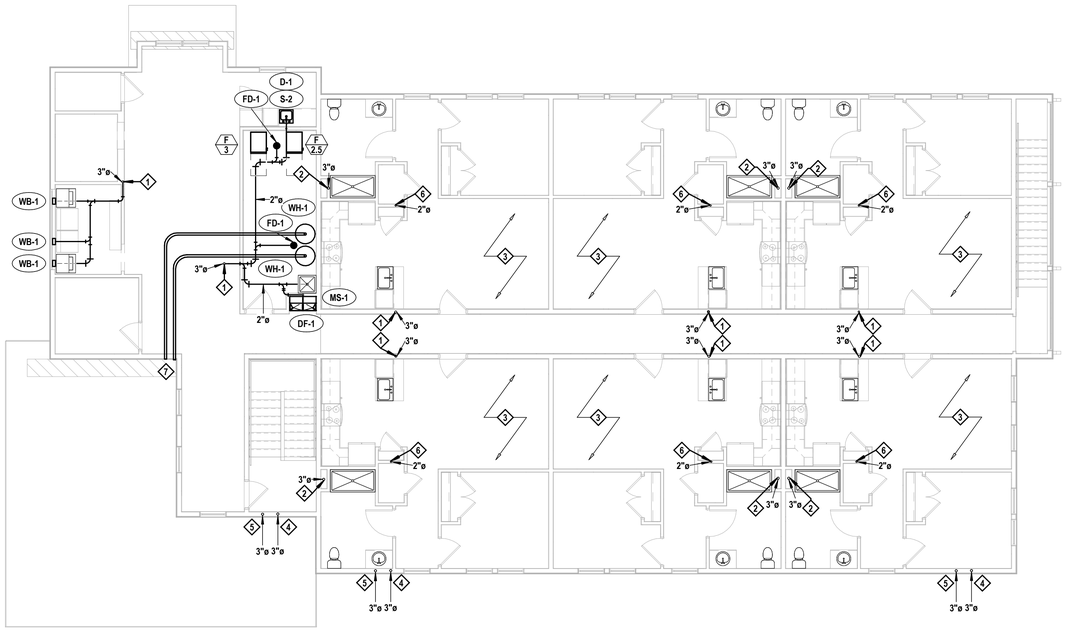

SECOND LEVEL PLUMBING FLOOR PLAN - WASTE

SCALE: 1/8" = 1'-0"

DEKOLD ARCHITECTURE INC.
104 E 600 S #540, Heber City, UT 84032
(208) 206-7338
www.behance.net/kevindekold
kevindekold@hotmail.com

REGISTERED PROFESSIONAL ENGINEER
MARK L. MAKIN
3/19/25
STATE OF UTAH

Electrical
BNA CONSULTING
4225 W Lake Park Blvd St. 275
West Valley City, UT 84121
(435)628-3670

Mechanical
ROYAL
1837 S E Bay Blvd
Provo, UT 84606
(801)375-2228

Structural
REAVELEY
675 E 500 S ST. 400
Salt Lake City, UT 84102
(801)505-4026

Landscape
CACHE LANDMARK
95 W Golf Course Rd St. 101
Logan, UT 84321
(435)713-0099

Civil
CACHE LANDMARK
95 W Golf Course Rd St. 101
Logan, UT 84321
(435)713-0099

AIS - WEST VALLEY

WEST VALLEY, UT

REVISIONS:

SHEET NUMBER:

P-1.4

03/19/25

ROYAL ENGINEERING
ELECTRICAL
1837 S. EAST BAY BLVD.
PHONE: 801.375.2228
MECHANICAL
PROVO, UTAH 84606
FAX: 801.375.2676

COPYRIGHT © JOB# J24274.00 DATE PLOTTED: 03/19/2025

THESE DOCUMENTS ARE INSTRUMENTS OF PROFESSIONAL SERVICE AND THE INFORMATION CONTAINED HEREIN IS INCOMPLETE UNLESS IN CONJUNCTION WITH ROYAL ENGINEERING'S INTERPRETATIONS, DECISIONS, OBSERVATIONS AND ADMINISTRATIONS. USE OR REPRODUCTION OF THESE DOCUMENTS IN WHOLE OR IN PART WITHOUT ROYAL ENGINEERING'S CONSENT IS IN VIOLATION OF COMMON LAW COPYRIGHTS, STATUTORY AND OTHER RESERVED RIGHTS. REFER TO ACT 17 U.S.C. PAR. 301 (1991). WHICH PREEMPTS STATE AND LOCAL PUBLIC RECORD ACTS. REFER TO ACT 17 U.S.C. PAR. 301 (1991).

3/7/2025 2:03:11 PM

PLUMBING KEYED NOTES:

1. PROPOSED LOCATION FOR 3" ROOF DRAIN LINE DROP TO MAIN FLOOR. SEE MAIN FLOOR PLAN FOR CONTINUATION. COORDINATE FINAL LOCATION IN FIELD WITH STRUCTURE.
2. PROPOSED LOCATION FOR 3" OVERFLOW ROOF DRAIN LINE DROP TO MAIN FLOOR. SEE MAIN FLOOR PLAN FOR CONTINUATION. COORDINATE FINAL LOCATION IN FIELD WITH STRUCTURE.

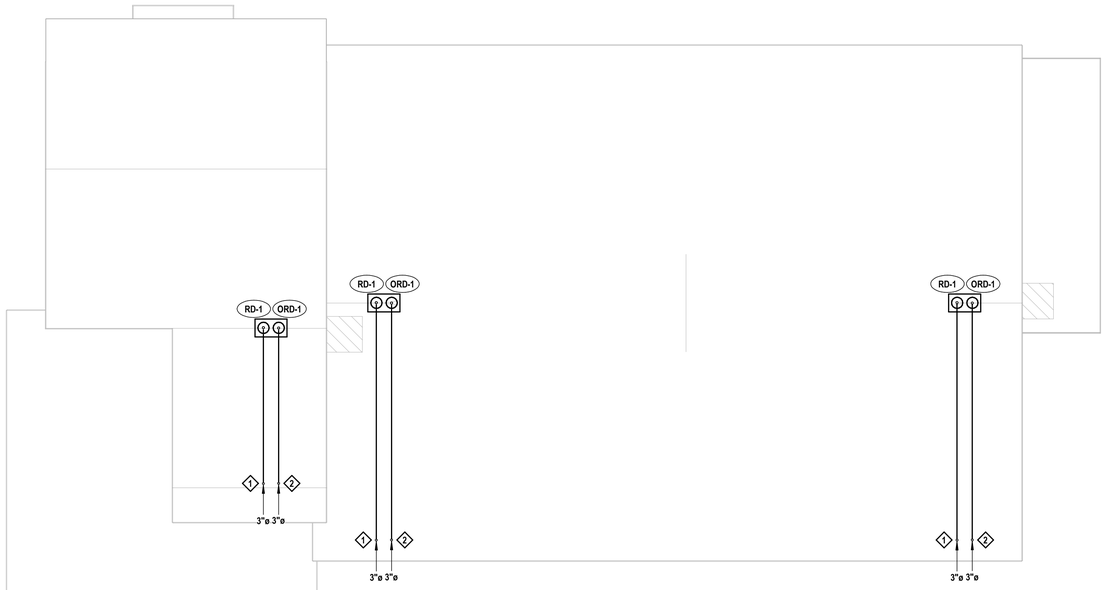

PLUMBING ROOF PLAN

SCALE: 1/8" = 1'-0"

DEKOLD ARCHITECTURE INC.
104 E 600 S #540, Heber City, UT 84032
(208) 206-7338
www.behance.net/kevindekold
kevindekold@hotmail.com



Electrical
BNA CONSULTING
4225 W Lake Park Blvd St. 275
West Valley City, UT 84121
(435)628-3670

Mechanical
ROYAL
1837 S E Bay Blvd
Provo, UT 84606
(801)375-2228

Structural
REAVELEY
675 E 500 S ST. 400
Salt Lake City, UT 84102
(801)505-4026

Landscape
CACHE LANDMARK
95 W Golf Course Rd St. 101
Logan, UT 84321
(435)713-0099

Civil
CACHE LANDMARK
95 W Golf Course Rd St. 101
Logan, UT 84321
(435)713-0099

AIS - WEST VALLEY

WEST VALLEY, UT

REVISIONS:

ROYAL ENGINEERING
ELECTRICAL
1837 S. EAST BAY BLVD.
PHONE: 801.375.2228
MECHANICAL
PROVO, UTAH 84606
FAX: 801.375.2676

COPYRIGHT © JOB# J24274.00 DATE PLOTTED: 03/19/2025

THESE DOCUMENTS ARE INSTRUMENTS OF PROFESSIONAL SERVICE AND THE INFORMATION CONTAINED HEREIN IS INCOMPLETE UNLESS IN CONJUNCTION WITH ROYAL ENGINEERING'S INTERPRETATIONS, DECISIONS, OBSERVATIONS AND ADMINISTRATIONS. USE OR REPRODUCTION OF THESE DOCUMENTS IN WHOLE OR IN PART WITHOUT ROYAL ENGINEERING'S CONSENT IS IN VIOLATION OF COMMON LAW COPYRIGHTS, STATUTORY AND OTHER RESERVED RIGHTS. REFER TO ACT 17 U.S.C. PAR. 511 (1991), WHICH PREEMPTS STATE AND LOCAL PUBLIC RECORD ACTS. REFER TO ACT 17 U.S.C. PAR. 301 (1991).

SHEET NUMBER:

P-1.5

03/19/25

3/7/2025 2:03:11 PM

PLUMBING KEYED NOTES:

1. PROPOSED LOCATION OF 3/4" WATER LINE, 3/4" HOT WATER LINNE, 3/4" HOT WATER RETURN LINE, AND 1/2" GAS LINE FROM MAIN BUILDING SUPPLY LOOP. PROVIDE AND INSTALL UNIT SHUT-OFF AND CHECK VALVE WITHIN UNIT. PROVIDE AND INSTALL ACCESS COVER (FIRE RATED AS REQUIRED).
2. PROPOSED LOCATION OF 3" SANITARY SEWER DROP TO LEVEL BELOW. SEE PLUMBING SCHEMATICS FOR STACK SIZING AND VENT SIZING. FIELD VERIFY FINAL LOCATION WITH STRUCTURE.
4. PROPOSED LOCATON OF WATER LINE DROP(S) CONCEALED WITHIN WALL TO BE ROUTED HORIZONTALLY THROUGH THE FLOOR SYSTEM TO ISLAND DISHWASHER.
5. PROPOSED LOCATION FOR 1/2" GAS LINE FOR FURNACE FROM CEILING/ LEVEL ABOVE. PROVIDE AND INSTALL GAS REGULATOR. FIELD VERIFY EXACT LOCATION WITH STRUCTURE.
6. PROPOSED LOCATION OF 2" SANITARY SEWER DROP TO LEVEL BELOW. SEE PLUMBING SCHEMATICS FOR STACK SIZING AND VENT SIZING. FIELD VERIFY FINAL LOCATION WITH STRUCTURE.

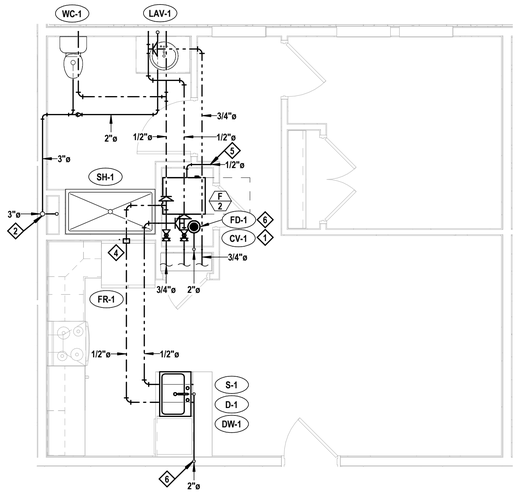

ENLARGED 1 BEDROOM PLUMBING PLAN

SCALE: 1/4" = 1'-0"

DEKOLD ARCHITECTURE INC.
104 E 600 S #540, Heber City, UT 84032
(208) 206-7338
www.behance.net/kevindekold
kevindekold@hotmail.com

REGISTERED PROFESSIONAL ENGINEER
MARK L. MAKIN
3/19/25
STATE OF UTAH

Electrical
BNA CONSULTING
4225 W Lake Park Blvd St. 275
West Valley City, UT 84121
(435)628-3670

Mechanical
ROYAL
1837 S E Bay Blvd
Provo, UT 84606
(801)375-2228

Structural
REAVELEY
675 E 500 S ST. 400
Salt Lake City, UT 84102
(801)505-4026

Landscape
CACHE LANDMARK
95 W Golf Course Rd St. 101
Logan, UT 84321
(435)713-0099

Civil
CACHE LANDMARK
95 W Golf Course Rd St. 101
Logan, UT 84321
(435)713-0099

AIS - WEST VALLEY

WEST VALLEY, UT

REVISIONS:

SHEET NUMBER:

P-4.1

03/19/25

ROYAL ENGINEERING
ELECTRICAL
1837 S. EAST BAY BLVD.
PHONE: 801.375.2228
MECHANICAL
PROVO, UTAH 84606
FAX: 801.375.2676

COPYRIGHT © JOB# J24274.00 DATE PLOTTED: 03/19/2025

THESE DOCUMENTS ARE INSTRUMENTS OF PROFESSIONAL SERVICE AND THE INFORMATION CONTAINED HEREIN IS INCOMPLETE UNLESS IN CONJUNCTION WITH ROYAL ENGINEERING'S INTERPRETATIONS, DECISIONS, OBSERVATIONS AND ADMINISTRATIONS. USE OR REPRODUCTION OF THESE DOCUMENTS IN WHOLE OR IN PART WITHOUT ROYAL ENGINEERING'S CONSENT IS IN VIOLATION OF COMMON LAW COPYRIGHTS, STATUTORY AND OTHER RESERVED RIGHTS. REFER TO ACT 17 U.S.C. PAR. 511 (1991). WHICH PREEMPTS STATE AND LOCAL PUBLIC RECORD ACTS. REFER TO ACT 17 U.S.C. PAR. 301 (1991).

3/7/2025 2:03:12 PM

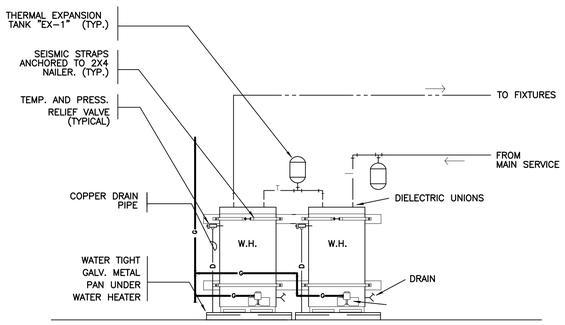

NOTES:
1. PROVIDE AND INSTALL 2 SEISMIC STRAPS WITH TENSIONING BUCKLES ANCHORED TO STRUCTURE. INSTALL PER MANUFACTURERS REQUIREMENTS
2. PROVIDE AND INSTALL PAN W/DRAIN WHERE REQUIRED, OR WHERE LEAK DAMAGE MAY OCCUR. DRAIN LINE SHALL BE 1 1/2" FOR PROJECTS LOCATED IN UTAH, 3/4" FOR OTHER PROJECT LOCATIONS.

GAS WATER HEATER IN SERIES DETAIL

SCALE: NONE

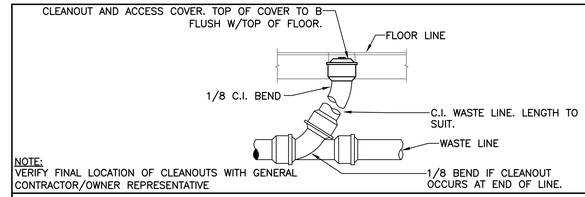

NOTE:
VERIFY FINAL LOCATION OF CLEANOUTS WITH GENERAL CONTRACTOR/OWNER REPRESENTATIVE

TYPICAL FLOOR CLEANOUT DETAIL

SCALE: NONE

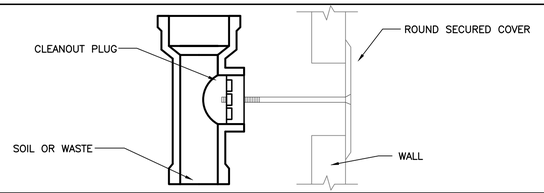

TYPICAL WALL CLEANOUT DETAIL

SCALE: NONE

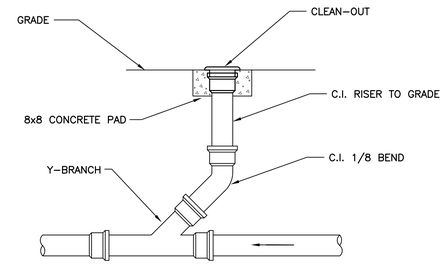

TYPICAL SURFACE CLEANOUT DETAIL

SCALE: NONE

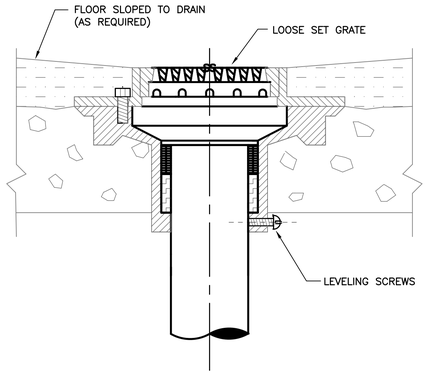

TYPICAL FLOOR DRAIN

SCALE: NONE

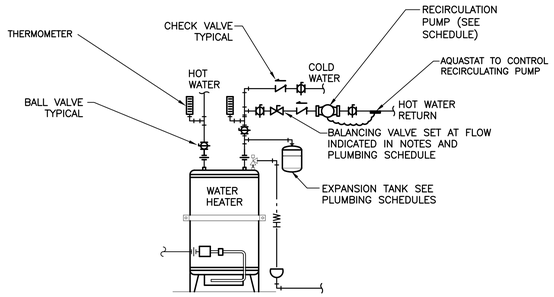

NOTES:
1. MAX ALLOWABLE VELOCITY RATES FOR HOT WATER RETURN LINE IS FROM 3 FPS TO 5 FPS
2. SEE WATER HEATER INSTALLATION DETAIL FOR ADDITIONAL INFORMATION.

RECIRCULATION PUMP WITH WATER HEATER DETAIL

SCALE: NONE

NOTE:
VENT TO OUTSIDE MAY BE ELIMINATED PROVIDED IF REGULATOR IS EQUIPPED WITH AND LABELED FOR USE WITH A VENT LIMITING DEVICE.

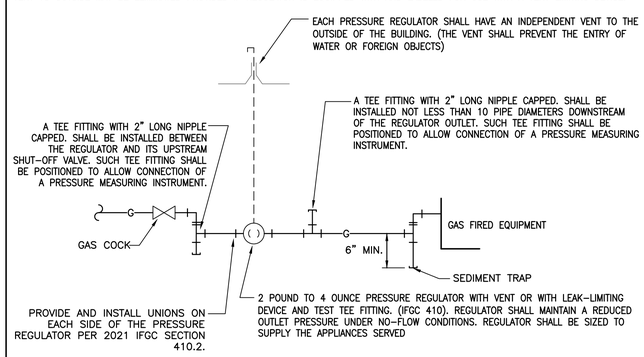

NOTE:
PRESSURE REGULATORS INSTALLED INSIDE BUILDING SHALL BE PROVIDED WITH ACCESS.

TYPICAL 2LB GAS CONNECTION DETAIL

SCALE: NONE

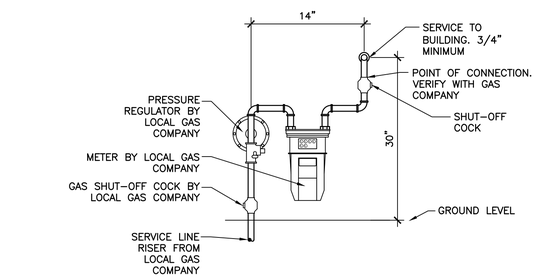

NOTES:
1. PAINT ALL EXTERIOR GAS PIPING WITH WEATHER RESISTANT PAINT.
2. FOR MULTIPLE METER INSTALLATIONS WHERE TWO OR MORE HOUSE LINES TERMINATE AT A MULTIPLE METER SET, THEY SHOULD BE SPACED NOT LESS THAN 10" NOR MORE THAN 12" APART.
3. METERS STACKED TWO ROWS HIGH (MAXIMUM).
4. GAS PIPING AT MULTIPLE METER INSTALLATIONS SHALL BE PLAINLY MARKED BY A METAL TAG OR OTHER PERMANENT MEANS ATTACHED TO THE PIPE BY THE INSTALLING AGENCY, DESIGNATING THE BUILDING OR THE PART OF THE BUILDING BEING SUPPLIED.
5. SEAL ALL PENETRATIONS INTO BUILDING WEATHER TIGHT.

GAS METER INSTALLATION

SCALE: NONE

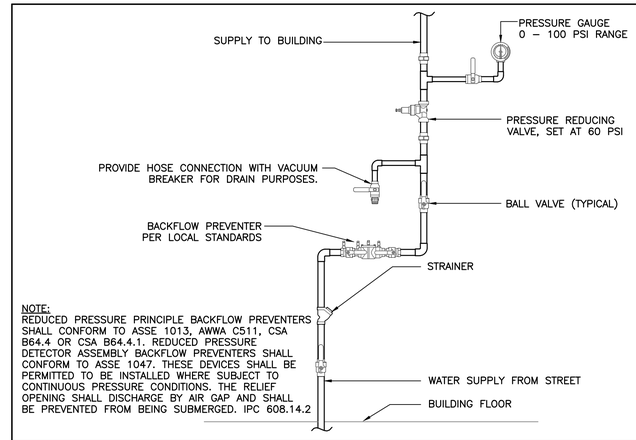

NOTE:
REDUCED PRESSURE PRINCIPLE BACKFLOW PREVENTERS SHALL CONFORM TO ASSE 1013, AWWA C511, CSA B64.4 OR CSA B64.4.1. REDUCED PRESSURE DETECTOR ASSEMBLY BACKFLOW PREVENTERS SHALL CONFORM TO ASSE 1047. THESE DEVICES SHALL BE PERMITTED TO BE INSTALLED WHERE SUBJECT TO CONTINUOUS PRESSURE CONDITIONS. THE RELIEF OPENING SHALL DISCHARGE BY AIR GAP AND SHALL BE PREVENTED FROM BEING SUBMERGED. IPC 608.14.2

WATER PRV STATION WITH BACKFLOW PREVENTER DETAIL

SCALE: NONE

DEKOLD ARCHITECTURE INC.
104 E 600 S #540, Heber City, UT 84032
(208) 206-7338
www.behance.net/kevindekold
kevindekold@hotmail.com

Civil — CACHE LANDMARK — 95 W Golf Course Rd St. 101, Logan, UT 84321, (435)713-0099
Landscape — LDG — 328 W 200 S #102, Salt Lake City, UT 84101, (435)901-3127
Structural — REAVELEY — 675 E 500 S St. 400, Salt Lake City, UT 84102, (801)500-4026
Mechanical — ROYAL — 1837 S E Bay Blvd, Provo, UT 84606, (801)375-2228
Electrical — BNA CONSULTING — 4225 W Lake Park Blvd St. 275, West Valley City, UT 84121, (435)628-3670

REVISIONS:

SHEET NUMBER:
P-5.1
03/19/25

ROYAL ENGINEERING
ELECTRICAL
1837 S. EAST BAY BLVD.
PHONE: 801.375.2228
MECHANICAL
PROVO, UTAH 84606
FAX: 801.375.2676

COPYRIGHT© JOB# J24274.00 DATE PLOTTED: 03/19/2025
THESE DOCUMENTS ARE INSTRUMENTS OF PROFESSIONAL SERVICE AND THE INFORMATION CONTAINED HEREIN IS INCOMPLETE UNLESS IN CONJUNCTION WITH ALL OTHER CONTRACT DOCUMENTS. ALL IDEAS, DESIGNS, ARRANGEMENTS AND ADAPTATIONSHOWN IN OR REPRODUCTION OF THESE DOCUMENTS ARE NOT TO BE USED IN PART WITHOUT ROYAL ENGINEERING'S CONSENT IS IN VIOLATION OF COMMON LAW, COPYRIGHTS, STATUTORY AND OTHER RESERVED RIGHTS. REFER TO ACT 17 U.S.C. PAR. 301 (1990). THIS DOCUMENT ACCEPTS STATE AND LOCAL PUBLIC RECORD ACTS. REFER TO ACT 17 U.S.C. PAR. 301 (1990).

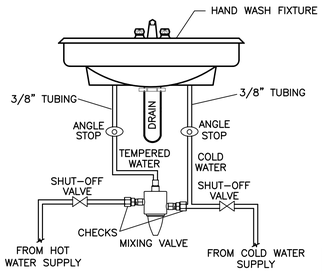

MIXING VALVE DESIGN STANDARD:
SYMMONS MAXLINE 8210CK (5 GPM)

SINGLE HAND WASH LOCATION

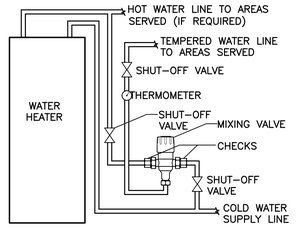

USED W/	GPM	MIXING VALVE	INLETS & OUTLETS
4-20GAL WH	14	SYMMONS 7-225-CK-F	1/2"
40GAL WH	14	SYMMONS 7-230-CK-F	3/4"

NOTE:
IF REQUIRED GPM EXCEEDS CAPABILITIES OF MIXING VALVES LISTED, PROVIDE MIXING VALVE WITH CAPABILITY NEEDED.

SERVING MULTIPLE FIXTURES

NOTES:
1. PROVIDE WITH SEPARATE CHECKS AND WALL MOUNTING BRACKET.
2. SHALL CONFORM TO ASSE 1070 – LIMIT THE TEMPERED WATER TEMPERATURE TO A MAXIMUM OF 110 deg F. IPC 2021, 607.1.2.
3. SET MIXING VALVE TEMPERATURE WHEN INSTALLATION IS COMPLETE.
4. FOLLOW ALL MANUFACTURER INSTALLATION AND OTHER INSTRUCTIONS.
5. APPROVED MANUFACTURERS: SYMMONS, POWERS, LEONARD, BRADLEY, WATTS, LAWLER.
6. INSTALL HANDY-SHIELD, AS MANUFACTURED BY PLUMBEREX SPECIALTY PRODUCTS, SAFETY COVERS ON ALL SUPPLY PIPING AND WASTE PIPING BENEATH HANDICAPPED LAVATORIES. SHIELDS SHALL MEET THE REQUIREMENTS OF UNIFORM FEDERAL ACCESSIBILITY STANDARDS 4.19.4 GSA AND ANSI DOCUMENT A117-1-1980.

WATER TEMPERING DETAILS (COMMON AREAS)

SCALE: NONE

SERVICE	BACKGROUND OR COLOR BAND	IDENTIFICATION MARKER
DOMESTIC COLD WATER	GREEN	WHITE ON GREEN
DOMESTIC HOT WATER	YELLOW	BLACK ON YELLOW
DOMESTIC HOT WATER RETURN	YELLOW	BLACK ON YELLOW
FIRE PROTECTION (SPRINKLER)	RED	WHITE ON RED
NATURAL GAS	YELLOW	BLACK ON YELLOW
SANITARY DRAIN	GREEN	WHITE ON GREEN
STORM WATER	GREEN	WHITE ON GREEN

OUTSIDE DIAMETER OF PIPE OR COVERING		LENGTH OF COLOR FIELD A		SIZE OF LETTERS B	
INCHES	MM	INCHES	MM	INCHES	MM
3/4" TO 1 1/4"	19 TO 32	8"	200	1/2"	13
1 1/2" TP 2"	38 TO 51	8"	200	3/4"	19
2 1/2" TO 6"	64 TO 150	12"	300	1 1/4"	32
8" TO 10"	200 TO 250	24"	600	2 1/2"	64
OVER 10"	OVER 250	32"	800	3 1/2"	89

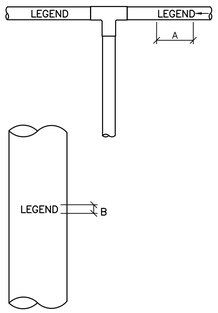

NOTE:
IDENTIFICATION MARKERS OR STRIPS TO BE PLACED ON ALL EXPOSED COVERED AND UNCOVERED PIPES AT 50'-0" INTERVALS AND AT ALL VALVES, BRANCHES, CHANGE IN DIRECTION OF FLOW AND ON BOTH SIDES OF WALLS WHERE PIPES PASS THROUGH SAME ARROWS OF SAME COLOR AS IDENTIFICATION MARKERS SHALL ALSO BE PLACED ON PIPES POINTED AWAY FORM MARKER INDICATION DIRECTION OF FLOW.

PIPING IDENTIFICATION

SCALE: NONE

MECHANICAL PIPING - MINIMUM INSULATION THICKNESS

SERVICE	TEMPERATURE RANGE (°F)	PIPE SIZE (IN.)					NOTES
		< 1	1 TO 1-1/2	2 TO 3-1/2	4 TO 7-1/2	8 & LARGER	
> 120 PSI STEAM	> 350	2.5	3	3	4	4	1, 2, 3, 5, 6
16 - 120 PSI STEAM	251 - 350	1.5	2.5	3	3	3	1, 2, 3, 5, 6
0 - 15 PSI STEAM	201 - 250	1.5	1.5	3	3	3	1, 2, 3, 5, 6
HOT WATER	141 - 200	1.5	1.5	2	2	2	1, 3, 5, 6
HOT WATER	105 - 140	1.5	1.5	2	2	2	1, 3, 5, 6
COOLING SYSTEMS	40 - 60	1.5	1.5	2	2	2	1, 3, 4, 5, 6
COOLING COIL CONDENSATE	32 - 65	.5	.5	.5	.5	.5	1, 5, 6

1. INSULATION CONDUCTIVITY NOT TO EXCEED 0.27 BTU PER INCH. WHERE INSULATION IS NOT EQUAL TO 0.27 BTU PER INCH THE INSULATION THICKNESS SHALL BE INCREASE AS DIRECTED IN THE INTERNATIONAL ENERGY CONSERVATION CODE.
2. STEAM SERVICE INCLUDES BOTH STEAM AND CONDENSATE RETURN PIPING.
3. INSULATION THICKNESS FOR RUN-OUT PIPING BETWEEN THE CONTROL VALVE AND HVAC EQUIPMENT MAY BE REDUCED TO 1".
4. COOLING SYSTEMS INCLUDE CHILLED WATER, CHILLED BRINE, REFRIGERANT SUCTION, REFRIGERANT HOT GAS, AND CONDENSER WATER AND HEAT RECOVERY PIPING FALLING WITHIN THE LISTED TEMPERATURE RANGE.
5. INSULATION THICKNESS FOR PIPING LOCATED OUTDOORS OR EXPOSED TO OUTSIDE AIR SHALL BE INCREASED BY 1".
6. WHERE SCHEDULED THICKNESS DIFFERS FROM SPECIFICATIONS THE THICKER DIMENSION SHALL BE USED.

PLUMBING PIPING - MINIMUM INSULATION THICKNESS

SERVICE	TEMPERATURE RANGE (°F)	PIPE SIZE (IN.)					NOTES
		< 1	1 TO 1-1/2	2 TO 3-1/2	4 TO 7-1/2	8 & LARGER	
DOMESTIC COLD WATER	45 - 90	1	1	1	1	1	1, 2, 3
DOMESTIC HOT WATER	90+	1	1	1.5	1.5	1.5	1, 2, 3, 4
SERVICE HOT WATER	90+	1	1	1.5	1.5	1.5	1, 2, 3, 4
ROOF DRAIN PIPING	32+	1	1	1	1	1	1, 2, 3, 5

1. INSULATION CONDUCTIVITY NOT TO EXCEED 0.27 BTU PER INCH. WHERE INSULATION IS NOT EQUAL TO 0.27 BTU PER INCH THE INSULATION THICKNESS SHALL BE INCREASE AS DIRECTED IN THE INTERNATIONAL ENERGY CONSERVATION CODE.
2. INSULATION THICKNESS FOR PIPING LOCATED OUTDOORS OR EXPOSED TO OUTSIDE AIR SHALL BE INCREASED BY 1".
3. WHERE SCHEDULED THICKNESS DIFFERS FROM SPECIFICATIONS THE THICKER DIMENSION SHALL BE USED.
4. SERVICE AND DOMESTIC HOT WATER INCLUDES RE-CIRCULATION LOOP PIPING.
5. ROOF DRAIN PIPING INCLUDES DRAIN BOWELS AND OVERFLOW DRAIN PIPING.

PIPING INSULATION DETAIL

SCALE: NONE

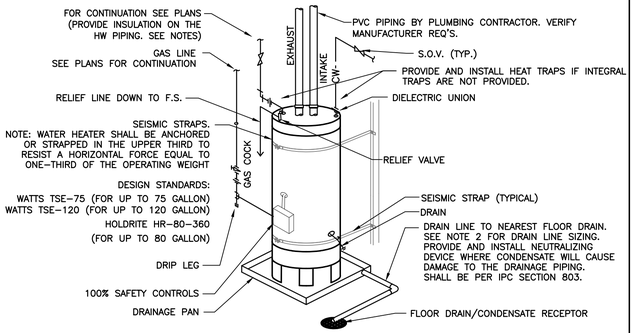

TABLE C403.12.3 PIPING INSULATION IECC 2021

FLUID OPERATING TEMPERATURE RANGE AND USAGE (°F)	INSULATION CONDUCTIVITY		NOMINAL PIPE SIZE OR TUBE SIZE (INCHES)				
	CONDUCTIVITY BTUxIN./(HxFT2xF°)	MEAN RATING TEMPERATURE, F°	<1	1 TO <1 1/4	1 1/4 TO < 4	4 TO < 8	> 8
>350	0.32 – 0.34	250	4.5	5.0	5.0	5.0	5.0
251 – 350	0.29 – 0.32	200	3.0	4.0	4.5	4.5	4.5
201 – 250	0.27 – 0.30	150	2.5	2.5	2.5	3.0	3.0
141 – 200	0.25 – 0.29	125	1.5	1.5	2.0	2.0	2.0
105 – 140	0.21 – 0.28	100	1.0	1.0	1.5	1.5	1.5
40–60	0.21 – 0.27	75	0.5	0.5	1.0	1.0	1.0
<40	0.20 – 0.26	50	0.5	1.0	1.0	1.0	1.5

NOTES:
1. PROVIDE AND INSTALL 2 SEISMIC STRAPS WITH TENSIONING BUCKLES ANCHORED TO STRUCTURE. INSTALL PER MANUFACTURERS REQUIREMENTS.
2. PROVIDE AND INSTALL PAN W/DRAIN WHERE REQUIRED, OR WHERE LEAK DAMAGE MAY OCCUR. DRAIN LINE SHALL BE 1 1/2" DIAMETER FOR PROJECTS LOCATED IN UTAH, 3/4" DIAMETER FOR OTHER PROJECT LOCATIONS.
3. PROVIDE HEAT TRAPS ON SUPPLY AND DISCHARGE PIPES.
4. THE FIRST 8 FEET OF PIPING IN NONCIRCULATING SYSTEMS SERVED BY EQUIPMENT WITHOUT INTEGRAL HEAT TRAPS SHALL BE INSULATED AS PER TABLE 403.12.3. IECC 2021.
5. FOR AUTOMATIC CIRCULATING HOT WATER SYSTEMS, PIPING SHALL BE INSULATED AS PER TABLE 403.12.3. IECC 2021.
6. FOR PROJECTS IN UTAH, PROVIDE LOW NOX WATER HEATER

TYPICAL DIRECT POWER VENT GAS WATER HEATER DETAIL

SCALE: NONE

DEKOLD ARCHITECTURE INC.
104 E 600 S #540, Heber City, UT 84032
(208) 206-7338
www.behance.net/kevindekold
kevindekold@hotmail.com

Civil — CACHE LANDMARK — 95 W Golf Course Rd St. 101, Logan, UT 84321 — (435)713-0099
Landscape — LDG — 328 W 200 S #102, Salt Lake City, UT 84101 — (435)901-3127
Structural — REAVELEY — 575 E 500 S St. 400, Salt Lake City, UT 84102 — (801)505-4026
Mechanical — ROYAL — 1837 S E Bay Blvd, Provo, UT 84606 — (801)375-2228
Electrical — BNA CONSULTING — 4225 W Lake Park Blvd St. 275, West Valley City, UT 84121 — (435)628-3670

REVISIONS:

SHEET NUMBER:
P-5.2
03/19/25

ROYAL ENGINEERING
ELECTRICAL
1837 S. EAST BAY BLVD.
PHONE: 801.375.2228
MECHANICAL
PROVO, UTAH 84606
FAX: 801.375.2676

COPYRIGHT© JOB# J24274.00 DATE PLOTTED: 03/19/2025
THESE DOCUMENTS ARE INSTRUMENTS OF PROFESSIONAL SERVICE AND THE INFORMATION CONTAINED HEREIN IS INCOMPLETE UNLESS IN CONJUNCTION WITH ALL OTHER CONTRACT DOCUMENTS. ALL DRAWINGS, SPECIFICATIONS AND ADMINISTRATIONSHEETS OR REPRODUCTION OF THESE DOCUMENTS MADE OR IN PART WITHOUT ROYAL ENGINEERING'S CONSENT IS IN VIOLATION OF COMMON LAW, COPYRIGHTS, STATUTORY AND OTHER RESERVED RIGHTS. REFER TO ACT 17 U.S.C. PAR. 501 (1990). THESE DOCUMENTS STATE AND LOCAL PUBLIC RECORD ACTS. REFER TO ACT 17 U.S.C. PAR. 301 (1991).

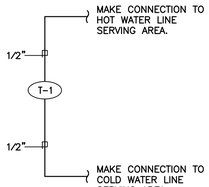

TYPICAL TUB

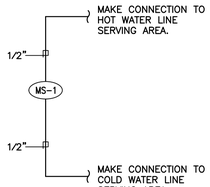

TYPICAL MOP SINK

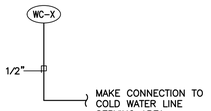

TYPICAL WATER CLOSET - TANK

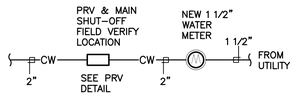

WATER METER

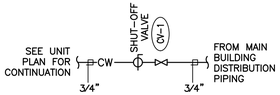

UNIT WATER CONNECTION

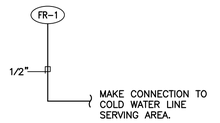

TYPICAL FRIDGE CONNECTION

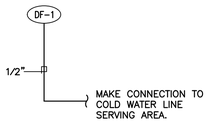

TYPICAL DRINKING FOUNTAIN

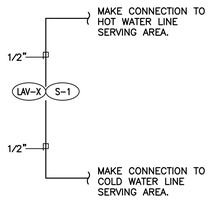

TYPICAL LAVATORY / SINK

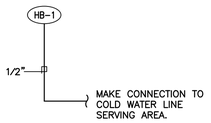

TYPICAL HOSE BIB

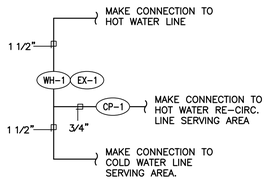

TYPICAL WATER HEATER

WATER PIPING SCHEMATICS

SCALE: NONE

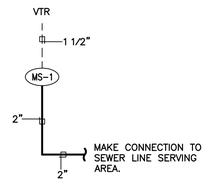

TYPICAL MOP SINK

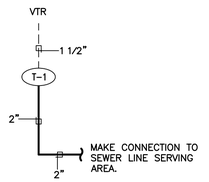

TYPICAL TUB

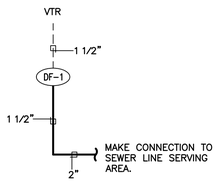

TYPICAL DRINKING FOUNTAIN

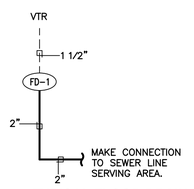

TYPICAL FLOOR DRAIN

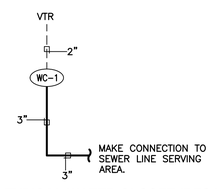

TYPICAL WATER CLOSET (RES.)

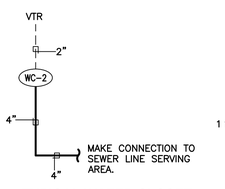

TYPICAL WATER CLOSET

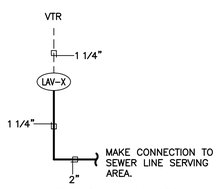

TYPICAL LAVATORY

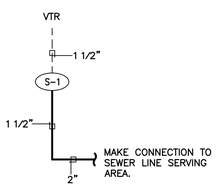

TYPICAL SINK

WASTE AND VENT PIPING SCHEMATICS

SCALE: NONE

GENERAL NOTE: VENT & CONDENSATE SHALL BE 12"-24" BELOW DECK/ROOF ABOVE TO AVOID CONDENSATION ICING

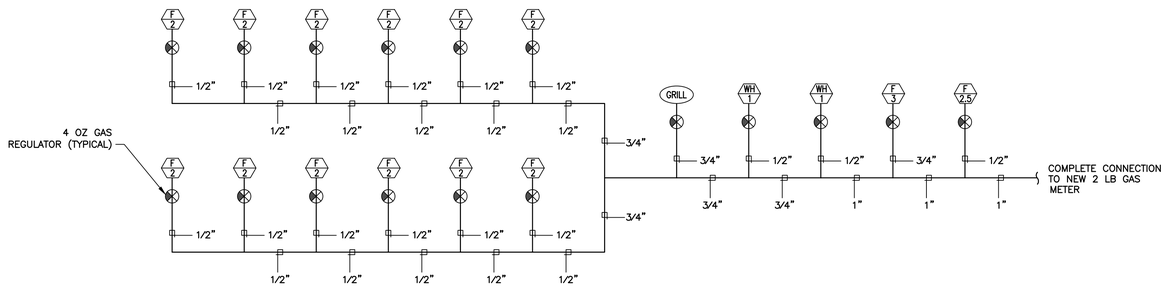

BUILDING GAS SCHEMATIC

PLUMBING FIXTURE SCHEDULE

MARK	FIXTURE	PIPE SIZE					REMARKS
		TRAP	WASTE	VENT	C.W.	H.W.	
CV-1	UNIT CHECK VALVE	—	—	—	3/4	—	DESIGN GUIDE: NIBCO HYDRAPURE 480 SERIES. WATER CHECK VALVE TO MATCH PIPE SIZING.
DW-1	DISH WASHER	—	—	—	—	1/2"	CONNECT DRAIN TO SINK DRAIN PIPE OR DISPOSAL DISHWASHER DRAIN TUBE IF INSTALLED. PROVIDE AND INSTALL HAMMER ARRESTOR WITH COMPRESSION FITTINGS AT DISHWASHER SUPPLY VALVE.
D-1	DISPOSAL	—	—	—	—	—	1/2 HP, 120 VOLT, 8 AMP AVE. LOAD, WASTE DISPOSAL WITH DISHWASHER DRAIN CONNECTION. CONNECT TO SINK AND PROVIDE ALL MOUNTING HARDWARE. CONTROL BY ELECTRICAL CONTRACTOR.
EX-1	EXPANSION TANK	—	—	—	3/4"	—	WATTS PLT-12 (OR EQUAL), DRAWN STEEL POTABLE WATER EXPANSION TANK WITH DIAPHRAGM SEPARATING THE AIR CHAMBER FROM THE WATER CHAMBER. DIAPHRAGM MATERIALS SHALL BE FDA APPROVED.
FD-1	FLOOR DRAIN	2"	2"	1 1/2"	—	—	FLOOR DRAIN WITH STRAINER. PROVIDE AND INSTALL TRAP BARRIER-TYPE SEAL PROTECTION (I.E. TRAP GUARD). SEE ARCHITECTURAL DRAWINGS FOR FLOOR TYPE.
FR-1	FRIDGE WATER CONNECTION	—	—	—	1/2"	—	RECESSED ICE MAKER/WATER OUTLET BOX WITH FACE PLATE AND SUPPLY VALVE. FIRE RATED / UL LISTED BOX AS REQUIRED.
HB-2	HOSE BIB, EXTERIOR	—	—	—	1/2"	—	FREEZELESS WALL MOUNTED HOSE BIB WITH ANTI-SIPHON VACUUM BREAKER. PROVIDE AND INSTALL BRANCH SHUT-OFF VALVE.
LAV-1	LAVATORY-COUNTER MOUNTED	1 1/4"	1 1/4"	1 1/4"	1/2"	1/2"	AMERICAN STANDARD-AQUALYN, COUNTERTOP MOUNTED, VITREOUS CHINA BASIN WITH SINGLE LEVER MOEN GENTA FAUCET AND SAFETY COVERS FOR ALL EXPOSED PIPING.
LAV-2	LAVATORY-WALL MOUNTED-ADA COMPLIANT	1 1/4"	1 1/4"	1 1/4"	1/2"	1/2"	AMERICAN STANDARD-LUCERNE, WALL HUNG, VITREOUS CHINA BASIN, SINGLE LEVER MOEN GENTA FAUCET AND SAFETY COVERS FOR ALL EXPOSED PIPING. SEE ARCHITECTURAL DRAWINGS.
MS-1	MOP SINK	2"	2"	1 1/2"	1/2"	1/2"	AMERICAN STANDARD-FLORWELL, ENAMELED CAST IRON FLOOR MOUNTED MOP SINK, VINYL RIM GUARD AND AMERICAN STANDARD 8344.112 WALL MOUNTED FAUCET WITH THREADED HOSE CONNECTION.
RD-1	ROOF DRAIN-STANDARD	—	3"	—	—	—	STANDARD ROOF DRAIN WITH INTEGRAL GRAVEL GUARD AND SELF-LOCKING CAST IRON DOME.
ORD-1	ROOF DRAIN-OVERFLOW	—	3"	—	—	—	OVERFLOW ROOF DRAIN WITH INTEGRAL GRAVEL GUARD, STANDPIPE AND SELF-LOCKING CAST IRON DOME.
S-1	SINK-COUNTER MOUNTED-DOUBLE BOWL-ADA COMPLIANT	1 1/2"	1 1/2"	1 1/2"	1/2"	1/2"	DOUBLE BOWL, 18 GA. MIN. STAINLESS STEEL SINK, COUNTERTOP MOUNTED WITH LEDGEBACK, MOEN ALIGN FAUCET (W/ PULL OUT SPRAYER) & SAFETY COVERS FOR ALL EXPOSED PIPING.
S-2	SINK-COUNTER MOUNTED-SINGLE BOWL	1 1/2"	1 1/2"	1 1/2"	1/2"	1/2"	SINGLE BOWL, 18 GA. MIN. STAINLESS STEEL SINK, COUNTERTOP MOUNTED WITH LEDGEBACK, MOEN ALIGN FAUCET (W/ PULL OUT SPRAYER) & SAFETY COVERS FOR ALL EXPOSED PIPING.
SH-1	SHOWER	2"	2"	1 1/2"	1/2"	1/2"	60" ROLL-IN SHOWER WITH SINGLE LEVER/HANDLE, ANTI-SCALD VALVE AND SHOWER HEAD.
SP-1	SUMP PUMP-ELEVATOR PIT (AS REQUIRED)	—	2"	—	—	—	EPOXY COATED CAST IRON, ELEVATOR PIT SUMP PUMP,10 AMPS, 120V, 20 GPM, 10 FEET HEAD. PROVIDE AS REQUIRED. SEE PLUMBING DETAILS.
WB-1	WASHING MACHINE CONNECTION	2"	2"	1 1/2"	1/2"	1/2"	RECESSED WASHING MACHINE OUTLET BOX WITH SUPPLY VALVES, WASTE DRAIN, FACE PLATE AND WATER HAMMER ARRESTORS. FIRE RATED / UL LISTED BOX AS REQUIRED.
WC-1	WATER CLOSET-FLOOR MOUNT-TANK-ADA COMPLIANT (RESIDENTIAL UNITS) 1.28 GPF	INT.	3"	2"	1/2"	—	AMERICAN STANDARD CADET, ADA COMPLIANT VITREOUS CHINA ELONGATED TANK TOILET, SEAT W/ COVER. SEE ARCHITECTURAL DRAWINGS FOR HEIGHTS AND CLEARANCES. HANDLE ON APPROACH SIDE.
WC-2	WATER CLOSET-FLOOR MOUNT-TANK-ADA COMPLIANT (COMMON AREAS) 1.28 GPF	INT.	4"	2"	1/2"	—	AMERICAN STANDARD CADET, ADA COMPLIANT VITREOUS CHINA ELONGATED TANK TOILET, OPEN SEAT W/O COVER. SEE ARCHITECTURAL DRAWINGS FOR HEIGHTS AND CLEARANCES. HANDLE ON APPROACH SIDE.
WH-1	WATER HEATER	—	—	—	1 1/2"	1 1/2"	DESIGN GUIDE: RHEEM TRITON GHE100SU-160(A), 100 GALLON TANK NATURAL GAS WATER HEATER W/ DRAIN PAN & DRAIN. 209 g.p.h RECOVERY @ 90° RISE. 199,000 BTU INPUT. 120V/60HZ/7.5 AMPS.
CP-1	CIRCULATION PUMP	—	—	—	—	1"	DESIGN GUIDE: GRUNDFOS UP 15-55. 87WATTS, 115V. 10 FT OF HEAD WITH 5.5 GPM. PROVIDE WITH AQUASTAT FOR AUTOMATIC CIRCULATION PUMP CONTROL.
LT-1	LINT INTERCEPTOR- LAUNDRY ROOM	—	4"	2"	—	—	DESIGN GUIDE: ZURN Z1185 LINT INTERCEPTOR, FLOW RATE 70 GPM. PROVIDE AND INSTALL PER MANUFACTURER'S RECOMMENDATIONS.

NOTES:
1. VERIFY ALL MANUFACTURERS, FINISHES, AND OPTIONS WITH OWNER BEFORE ORDERING ANY PLUMBING FIXTURES.
2. MINIMUM UNDERGROUND SANITARY SEWER PIPING SIZE SHALL BE 2 INCHES.

GAS PIPING CALCULATIONS

DESIGN CONDITIONS

CITY	– WEST VALLEY, UT
LONGEST GAS PIPE	– 250 FEET (VERIFY)
GAS PRESSURE	– 2 POUND (VERIFY)
DERATION FACTOR	– 843

EQUIPMENT

F-2 x12	29 CFH	(26,000 BTU/HR)
F-2.5	45 CFH	(40,000 BTU/HR)
F-3	68 CFH	(60,000 BTU/HR)
GRILL	173 CFH	(150,000 BTU/HR)
WH-1 x2	225 CFH	(199,000 BTU/HR)
TOTAL	1084 CFH	(960,000 BTU/HR)

BUILDING WATER PIPING CALCULATIONS

DESIGN CONDITIONS

CITY	– WEST VALLEY CITY, UT
DEVELOPED PIPE LENGTH	– 250 FEET (VERIFY)
WATER PRESSURE	– 60 psi MIN. (VERIFY)
ANTICIPATED FIXTURE UNITS	– 174 fu

MINIMUM METER SIZE: 1-1/2"
MINIMUM MAIN DISTRIBUTION LINE SIZE: 2"
174 FU = APPROXIMATELY 59 GPM
(35.4 GPM @ 0.6 HUNTERS CURVE ADJUSTMENT FACTOR)

ROOF DRAIN SIZING CALCULATIONS

AREA	AREA OF ROOF (FT^2)	PARAPET LENGTH (FT.)	PARAPET HEIGHT (FT.)	TOTAL AREA (FT^2)	RAINFALL RATE (INCH/H)	GPM
1	4,527	212	3	4,527	1.5	70
1	1,459	120	3	1,459	1.5	23

PIPE DIAMETER	MAXIMUM FT^2/GPM AT 1/8" PER FOOT
2"	22 GPM
3"	2466/55
4"	5640/115
5"	10,020/165
6"	16,050/344
8"	34,500/714
10"	62,100/1311

ROYAL ENGINEERING
ELECTRICAL
1837 S. EAST BAY BLVD.
PHONE: 801.375.2228
MECHANICAL
PROVO, UTAH 84606
FAX: 801.375.2676

COPYRIGHT© JOB# J24274.00 DATE PLOTTED: 03/19/2025
THESE DOCUMENTS ARE INSTRUMENTS OF PROFESSIONAL SERVICE AND THE INFORMATION CONTAINED HEREIN IS INCOMPLETE UNLESS IN CONJUNCTION WITH ROYAL ENGINEERING'S INTERPRETATIONS, DECISIONS, OBSERVATIONS AND RESPONSIBLE SUPERVISION. UNAUTHORIZED USE OF, OR COPYING FROM, THIS DOCUMENT IN WHOLE OR IN PART WITHOUT ROYAL ENGINEERING'S CONSENT IS IN VIOLATION OF COMMON LAW COPYRIGHTS, STATUTORY AND OTHER RESERVED RIGHTS. REFER TO ADT 17 U.S.C. PAR. 511 (1991), WHICH PRESCRIPTS STATE AND LOCAL PUBLIC RECORD ACTS. REFER TO ADT 17 U.S.C. PAR. 301 (1991).

DEKOLD ARCHITECTURE INC.
104 E 600 S #540, Heber City, UT 84032
(208) 206-7338
www.behance.net/kevindekold
kevindekold@hotmail.com

Civil — CACHE LANDMARK — 95 W Golf Course Rd St. 101, Logan, UT 84321, (435)713-0099
Landscape — LDG — 328 W 200 S #102, Salt Lake City, UT 84101, (435)901-3127
Structural — REAVELEY — 675 E 500 S St. 400, Salt Lake City, UT 84102, (801)505-4026
Mechanical — ROYAL — 1837 S E Bay Blvd, Provo, UT 84606, (801)375-2228
Electrical — BNA CONSULTING — 4225 W Lake Park Blvd St. 275, West Valley City, UT 84121, (435)628-3670

REVISIONS:

SHEET NUMBER:
P-6.1
03/19/25

FIRE ALARM							
	BELL	+94"	2.	S_S	SMOKE DETECTOR	CEILING	
C	CHIME / STROBE	+94" / CEILING	2.	S_{SC}	SMOKE/CARBON MONOXIDE DETECTOR	CEILING	
F	FIRE ALARM MANUAL STATION	+46"	2.	S_C	CARBON MONOXIDE DETECTOR	CEILING	
H	FIRE ALARM SIGNAL HORN / STROBE	+94" / CEILING	2.	S_H	HEAT DETECTOR	CEILING	
H CLG	CONCEALED FIRE ALARM HORN / STROBE	CEILING		S_D	DUCT SMOKE DETECTOR		MTD. IN DUCT
H	CONCEALED FIRE ALARM HORN / STROBE WALL	+94"	2.	D	FIRE/SMOKE DAMPER		
E	FIRE ALARM SPEAKER / STROBE	+94" / CEILING	2.		DOOR HOLDER	AS NOTED	
E CLG	CONCEALED FIRE ALARM SPEAKER / STROBE	CEILING		FS	FLOW SWITCH		
E	CONCEALED FIRE ALARM SPEAKER / STROBE WALL	+94"	2.	TS	TAMPER SWITCH		
S	FIRE ALARM STROBE	+94" / CEILING	2.	WF	WATER FLOOD INDICATOR		
S CLG	CONCEALED FIRE ALARM STROBE	CEILING			O.S. & Y. VALVE		SEE DIAGRAM
S	CONCEALED FIRE ALARM STROBE WALL	+94"	2.	R	FIRE ALARM RELAY OR SECURITY RELAY		
K	FIRE ALARM SPEAKER ONLY	+94" / CEILING	2.	CM	FIRE ALARM CONTROL MODULE		
B	FIRE ALARM STROBE WITH BLUE COLORED LENS (CO VISUAL ALARM)	+94" / CEILING	2.	MM	FIRE ALARM MONITOR MODULE		
ANN	FIRE ALARM ANNUNCIATOR PANEL	+58"	2. SEE DIAGRAM	TWZ	TWO-WAY COMMUNICATION SYSTEM CONTROL PANEL	+46"	2.
V	ASPIRATING SMOKE DETECTION SYSTEM	CEILING	MOUNT AS PER MFR.	TW	TWO-WAY COMMUNICATION SYSTEM CALL STATION	+46"	2.
B	BEAM DETECTOR		MOUNT AS PER MFR.	R	FIRE ALARM RELAY		

COLOR LEGEND					
	LIGHTING FIXTURES		POWER DEVICES		AUDIOVISUAL
	LIGHTING DEVICES		TELECOMMUNICATIONS		SECURITY
	POWER EQUIPMENT		FIRE ALARM		NURSECALL
	CABLE TRAY		CONDUIT		

ABBREVIATIONS INDEX

ABBREV.	DESCRIPTION	ABBREV.	DESCRIPTION
#	NUMBER	MH	MANHOLE
AC	ALTERNATING CURRENT	MIC	MICROPHONE
A.F.F.	ABOVE FINISH FLOOR	MIN	MINIMUM
AIC	AMPS INTERRUPTING CAPACITY	MTG	MOUNTING
AM	AMPS METER	MTR	MOTOR
AMP	AMPERE	N/A	NOT APPLICABLE
ANN	ANNUNCIATOR	NC	NORMALLY CLOSED
ATS	AUTOMATIC TRANSFER SWITCH	NEC	NATIONAL ELECTRICAL CODE
AUX	AUXILIARY	NEMA	NATIONAL ELECT. MANUFAC. ASSOC.
AWG	AMERICAN WIRE GAUGE	NFPA	NATIONAL FIRE PROTECTION ASSOC.
BC	BARE COPPER	N.I.C.	NOT IN CONTRACT
BFG	BELOW FINISH GRADE	NO	NORMALLY OPENED
C	CONDUIT	NTS	NOT TO SCALE
CAB	CABINET	OS & Y	OUTSIDE SCREW & YOKE
CATB	COMMUNITY ANTENNA TELEVISION	PB	PUSHBUTTON
CATV	CABLE TELEVISION	PF	POWER FACTOR
CKT	CIRCUIT	PFR	PHASE FAILURE RELAY
CLG	CEILING	PNL	PANEL
CNTR	CONTRACTOR	PT	POTENTIAL TRANSFORMER
C.O.	CONDUIT ONLY	PVC	POLYVINYL CHLORIDE CONDUIT
CRT	COMPUTER TERMINAL	(R)	RELOCATE
CT	CURRENT TRANSFORMER	RECEP	RECEPTACLE
CU	COPPER	REQ	REQUIREMENT
C/W	COMPLETE WITH	RLA	RATED LOAD AMPS
DB	DECIBEL	RMP	ROCKY MOUNTAIN POWER
DC	DIRECT CURRENT	RMS	ROOT MEAN SQUARE
DWG	DRAWING	SE	SERVICE ENTRANCE
(E)	EXISTING	SPEC	SPECIFICATIONS
EC	EMPTY CONDUIT	SPKR	SPEAKER
EG	EMERGENCY GENERATOR	SS	SELECTOR SWITCH
EMT	ELECTRICAL METALLIC TUBING	SW	SWITCH
EX	EXPLOSION PROOF	SWBD	SWITCHBOARD
FACP	FIRE ALARM CONTROL PANEL	SWGR	SWITCHGEAR
FC	FOOT CANDLE	TTB	TELEPHONE TERMINAL BOARD
FT	FOOT	TTC	TELEPHONE TERMINAL CABINET
GFI	GROUND FAULT INTERRUPTER	TV	TELEVISION
GND	GROUND	TYP	TYPICAL
GRC	GALVANIZED RIGID CONDUIT	UG	UNDERGROUND
HP	HORSE POWER	UPS	UNINTERRUPTED POWER SUPPLY
HZ	HERTZ	V	VOLT (KV-KILOVOLT)
IFC	INTERNATIONAL FIRE CODE	VA/R	VOLT-AMPS/REACTIVE
IG	ISOLATED GROUND	VM	VOLT METER
IMC	INTERMEDIATE METALLIC CONDUIT	W	WATTS
IN	INCH	W/	WITH
J-BOX	JUNCTION BOX	WH	WATTHOUR METER
KV	KILOVOLT	W/O	WITHOUT
KVA	KILOVOLT AMPERES	WP	WEATHERPROOF
KVAR	KILOVARS	XFMR	TRANSFORMER
KW	KILOWATT	XFMR SW	TRANSFER SWITCH
LRA	LOCKED ROTOR AMPS	XP	EXPLOSION PROOF
LTG	LIGHTING	1P	SINGLE-PHASE
MNF	MANUFACTURER	2P	TWO-POLE
MAX	MAXIMUM	3P	THREE-POLE
MB	MAIN BUS	4P	FOUR-POLE
MCC	MOTOR CONTROL CENTER	∅	PHASE
MCM	1000 CIRCULAR MILLS		

GENERAL NOTES

1. CONSULT ARCHITECTURAL REFLECTED CEILING PLANS FOR EXACT LOCATION OF ALL LIGHTING FIXTURES.
2. VERIFY ALL EQUIPMENT DIMENSIONS AND LOCATIONS BEFORE BEGINNING ROUGH IN. CONSULT ALL APPLICABLE CONTRACT DRAWINGS AND SHOP DRAWINGS TO INSURE NEC CODE CLEARANCES REQUIRED AROUND ALL ELECTRICAL EQUIPMENT.
3. CONTRACTOR SHALL VERIFY ALL ELECTRICAL LOADS (VOLTAGE, PHASE, CONNECTION REQUIREMENTS, ETC) OF ALL EQUIPMENT FURNISHED UNDER ALL DIVISIONS, INCLUDING ALL EXISTING EQUIPMENT TO BE RE-USED. REVIEW ALL SHOP DRAWINGS AND EXISTING EQUIPMENT BEFORE BEGINNING ROUGH-IN.
4. SEE SECTION 265100 (16510) OF THE SPECIFICATION FOR REQUIRED COORDINATION MEETINGS WITH MECHANICAL AND CEILING CONTRACTORS.
5. SEE APPLICABLE SHOP DRAWINGS FOR ROUGH IN LOCATION OF ALL EQUIPMENT, WIRING DEVICES, ETC. WHERE APPLICABLE MOUNT ALL WIRING DEVICES ABOVE BACK SPLASH EXCEPT THOSE SERVING UNDER COUNTER EQUIPMENT.
6. SEE SPECIFICATION FOR ENERGY SAVING LAMP AND BALLAST REQUIREMENTS.
7. FINISHES OF ALL LIGHT FIXTURES SHALL BE AS SELECTED BY ARCHITECT.
8. THE ELECTRICAL CONTRACTOR SHALL NOTIFY AND COOPERATE WITH THE MECHANICAL CONTRACTOR SUCH THAT NO PIPING, DUCTS, OR EQUIPMENT FOREIGN TO THE OPERATION OF THE ELECTRICAL EQUIPMENT SHALL BE PERMITTED TO BE INSTALLED IN, ENTER OR PASS THRU ELECTRICAL ROOMS OR SPACES, OR ABOVE OR BELOW ELECTRICAL EQUIPMENT IN OTHER AREAS.
9. ELECTRICAL BOXES SHALL NOT BE LOCATED IN MASONRY COLUMNS IN BRICK WALLS OR IN GROUTED CELLS ADJACENT TO OPENINGS. COORDINATE LOCATION OF BOXES WITH MASONRY CONTRACTOR.
10. ALL PENETRATIONS OF FIRE RATED FLOORS, WALLS, AND CEILINGS SHALL BE SEALED WITH APPROVED MATERIAL TO MAINTAIN FIRE RATING OF SURFACE PENETRATED.
11. CONTRACTOR SHALL VERIFY FURNITURE LAYOUT PRIOR TO ANY FLOORBOX OR POKE-THRU INSTALLATION. COORDINATE EXACT LOCATION OF FLOOR BOX OR POKE-THRU WITH OWNER AND FURNITURE PROVIDER PRIOR TO ROUGH-IN.
12. CIRCUITS EXTENDING OVER 70' FOR 120 VOLT AND 115' FOR 277 VOLT 20 AMP CIRCUITS SHALL BE RUN WITH CONDUCTORS PER TABLE BELOW.

20 AMP MINIMUM BRANCH CIRCUIT CONDUCTOR SIZING		
MAXIMUM LENGTH	BRANCH CIRCUIT VOLTAGE	
CONDUCTOR LENGTH (FT)	120 VOLT	277 VOLT
<70	MIN. #12 AWG	MIN. #12 AWG
70 - 115	MIN. #10 AWG	MIN. #12 AWG
115 - 170	MIN. #8 AWG	MIN. #10 AWG
170 - 270	MIN. #6 AWG	MIN. #8 AWG
271 - 380	NOTE B	MIN. #8 AWG
>380	NOTE B	NOTE B

A. THESE ARE BASED ON MAXIMUM LENGTH OF CIRCUIT.

B. PERFORM VOLTAGE DROP CALCULATIONS AND PROVIDE CONDUCTOR SIZE TO KEEP BRANCH CIRCUIT VOLTAGE DROP LESS THAN 3% WITH A 15 AMP LOAD.

C. CONTRACTOR SHALL ENSURE THAT THE INSTALLATION OF EACH BRANCH CIRCUIT STAYS WITHIN 3% VOLTAGE DROP FOR A 15 AMP LOAD. IF NECESSARY,CONTRACTOR SHALL INCREASE WIRE AND CONDUIT SIZE TO MEET THE STANDARD AT NO ADDITIONAL COST TO OWNER.

SHEET INDEX

E0.01	SYMBOLS AND NOTES
E0.02	SCHEDULES & COMCHECK
E1.10	ELECTRICAL SITE PLAN
E3.10	MAIN LEVEL LIGHTING PLAN
E3.11	SECOND LEVEL LIGHTING PLAN
E3.20	MAIN LEVEL POWER PLAN
E3.21	SECOND LEVEL POWER PLAN
E3.30	MAIN LEVEL SYSTEM PLAN
E3.31	SECOND LEVEL SYSTEM PLAN
E3.40	ENLARGED PLAN
E3.50	ONE-LINE DIAGRAM AND SCHEDULES
E3.51	SERVICE LOAD CALCULATIONS
E3.52	PANEL SCHEDULES
E4.01	ELECTRICAL DIAGRAMS AND DETAILS
E4.02	ELECTRICAL DIAGRAMS AND DETAILS
E4.03	ELECTRICAL DIAGRAMS AND DETAILS
E4.04	ELECTRICAL DIAGRAMS AND DETAILS

SYMBOL LEGEND

NOTES:

1. SEE FIXTURE SCHEDULE FOR TYPE, MOUNTING AND WATTAGE.
2. HEIGHT MEASURED TO CENTER LINE OF THE BOX FROM THE FINISHED FLOOR.
3. REFER TO DRAWINGS FOR DIRECTIONAL ARROWS.
4. SUBSCRIPT INDICATES FIXTURES TO BE CONTROLLED.
5. NEMA TYPE 'ND' NON-FUSED UNLESS NOTED 'F' (FUSED). USE 'HD' 480 V.
6. HEIGHT MEASURED TO TOP OF THE BOX FROM FINISHED FLOOR.
7. PROVIDE H.O.A. AND S.S. PUSHBUTTONS AS REQUIRED.
8. DOUBLE ARROWS INDICATES A DOUBLE FACE UNIT.
9. DEVICES NOTED WITH AN 'A' INDICATE TO COORDINATE WITH MILLWORK SHOP DRAWINGS AND ELEVATIONS FOR HEIGHT.
10. SUBSCRIPT INDICATES NEMA CONFIGURATION.
11. SOLID BOX AROUND DEVICE INDICATES INSTALLED IN FLOOR. DASHED BOX AROUND DEVICE INDICATES INSTALLED IN CEILING.
12. COORDINATE WITH DOOR HARDWARE SUPPLIER.
13. FOR WATER COOLER LOCATION, SEE DIAGRAM R002. FOR ALL OTHER LOCATIONS, MOUNT AT +16" TO BOTTOM OF BOX FROM FINISHED FLOOR, OR AS NOTED.
14. ARROWS SHOWN ON DEVICE INDICATE AIMING DIRECTION.
15. CAMERA NUMBERS ARE SHOWN INSIDE THE CAMERA SYMBOL. CAMERA TYPES ARE INDICATED IN TAG.
16. MOUNT ON TRACK OF OVERHEAD DOOR, 6" FROM TOP OF DOOR, UNLESS OVERHEAD DOOR IS A ROLL UP DOOR, THEN MOUNT PER MANUFACTURER'S INSTRUCTIONS.
17. INSTALL DEVICES PER MANUFACTURER'S INSTALLATION INSTRUCTIONS.
18. DASHED LINE INDICATES EQUIPMENT CLEARANCES. ARROW INDICATES FRONT OF RACK.
19. SPEAKER TO BE MOUNTED IN HORIZONTAL POSITION.
20. MOUNTING HEIGHT IS TO BOTTOM OF DISPLAY.

*TYPICAL SYMBOL SCHEDULE. SOME SYMBOLS MAY NOT BE USED ON THIS SET OF DRAWINGS.

STANDARD MOUNTING HEIGHT UNLESS OTHERWISE NOTED ON PLANS

GENERAL

SYMBOL	DESCRIPTION	MOUNTING HEIGHT	NOTES	SYMBOL	DESCRIPTION	MOUNTING HEIGHT	NOTES
	ONE CIRCUIT, HOME RUN TO PANEL				EQUIPMENT PANEL, SEE DRAWINGS	+72"	6.
	2 CIRCUIT, HOME RUN TO PANEL				CABLE TRAY	AS NOTED	
	3 CIRCUIT, HOME RUN TO PANEL				GROUND BUS BAR	+18"	6.
	CONDUIT RUN CONCEALED IN WALL OR CEILING			X	LIGHT FIXTURE (LETTER DESIGNATES TYPE)		
	CONDUIT RUN CONCEALED IN FLOOR OR GROUND			X/X	EQUIPMENT NUMBER		
	CONDUIT UP			X	ARCHITECTURAL ROOM NUMBER		
	CONDUIT DOWN			X	DEVICE / EQUIPMENT (TEXT DESIGNATES TYPE) SEE SCHEDULE		
	CONDUIT STUB LOCATION	CAP CONDUIT		X	DEVICE / EQUIPMENT (TEXT DESIGNATES TYPE) SEE SCHEDULE / LEGEND		
	CONDUIT / CIRCUIT CONTINUATION						

MULTIPLE SYSTEM SYMBOLS

R	RECEPTACLE SWITCH PACK	ABOVE CEILING		J F	JUNCTION BOX ('F' IN FLOOR)	AS NOTED	
	DUPLEX RECEPTACLE UPPER OUTLET SWITCH CONTROLLED	+18" OR AS NOTED	2. 9.		MOTOR OUTLET	TO SUIT EQUIP.	2.
	SIMPLEX RECEPTACLE	+18" OR AS NOTED	2. 9.		PUSHBUTTON	+46"	2.
	DUPLEX RECEPTACLE	+18" OR AS NOTED	2. 9. 11.		NON-FUSED DISCONNECT SWITCH	+60"	5. 6.
A	DUPLEX RECEPTACLE		9.	F	FUSED DISCONNECT SWITCH	+60"	5. 6.
G	5mA GFCI CIRCUIT BREAKER PROTECTED RECEPTACLE		13.	B	BREAKER DISCONNECT SWITCH	+60"	5. 6.
WP	WEATHERPROOF RECEPTACLE	+24" OR AS NOTED	2. 9.	S	SINGLE POLE SWITCH	+46"	2. 4.
	GROUND FAULT INTERRUPTER DUPLEX RECEPTACLE	+18" OR AS NOTED	2. 9.	S^T	MANUAL STARTER THERMAL OVERLOAD SWITCH WITH PILOT LIGHT	+46"	2.
	DUPLEX RECEPTACLE EMERGENCY POWER (RED)	+18" OR AS NOTED	2. 9. 11.		MAGNETIC STARTER	+60"	6. 7.
	FOURPLEX RECEPTACLE	+18" OR AS NOTED	2. 9. 11.		MAGNETIC STARTER / DISCONNECT COMBINATION	+60"	6. 7.
	GROUND FAULT INTERRUPTER FOURPLEX RECEPT	+18" OR AS NOTED	2. 9.	VFD	VARIABLE FREQUENCY DRIVE	+66"	6.

LIGHTING

	CEILING LIGHT FIXTURE	CEILING	1.	PP	POWER PACK	ABOVE CEILING	SEE DIAGRAM, SPEC.
	WALL LIGHT FIXTURE	AS NOTED	1.	RC X	DIGITAL ROOM CONTROLLER (SUBSCRIPT INDICATES NUMBER OF RELAYS)	ABOVE CEILING	SEE DIAGRAM, SPEC.
	RECESSED DOWNLIGHT FIXTURE	CEILING	1.	EP	EMERGENCY LIGHTING CONTROL UNIT	ABOVE CEILING	SEE DIAGRAM, SPEC.
	RECESSED WALL-WASH DOWNLIGHT FIXTURE	CEILING	1.	S^3	THREE-WAY SWITCH	+46"	2. 4.
	LIGHT FIXTURE	AS NOTED	1.	S^4	FOUR-WAY SWITCH	+46"	2. 4.
	EGRESS LIGHT FIXTURE	AS NOTED	1.	S^K	KEY OPERATED SWITCH	+46"	2. 4.
	AREA LIGHT POLE AND FIXTURE POST TOP LIGHT POLE AND FIXTURE	CONCRETE BASE	1. 14. SEE DIAGRAM	S^P	SWITCH WITH PILOT LIGHT	+46"	2. 4.
	BOLLARD	CONCRETE BASE	1. 14. SEE DIAGRAM	S^D	VARIABLE INTENSITY SWITCH	+46"	2. 4.
	STEP LIGHT FIXTURE	AS NOTED	1.	S^{TM}	TIMER SWITCH	+46"	2. 4.
	IN-GRADE LIGHT FIXTURE	CONCRETE BASE	1.		MOMENTARY CONTACT SWITCH	+46"	2. 4.
	FLOOD OR TRACK FIXTURE	AS NOTED	1.	X	LOW VOLTAGE WALLSTATION (SUBSCRIPT INDICATES CONFIGURATION & CONTROL SEQUENCE)	+46"	2. SEE DIAGRAM, SPEC.
	CEILING / WALL MOUNTED EXIT LIGHT	CEILING/ AS NOTED	1. 3. 8.		DUAL TECH. CEILING MOUNTED OCCUPANCY SENSOR (PROVIDE WITH ALL PP AND ROOM CONTROLLERS)	CEILING	SEE DIAGRAM, SPEC.
	EMERGENCY LIGHT FIXTURE	AS NOTED	1.		DUAL TECH. WALL MOUNTED OCCUPANCY SENSOR (SUBSCIPT D = DIMMING AND DAYLIGHT CONTROL)	+46"	2. 4. SEE DIAGRAM, SPEC.
	COMBO EXIT / EMERGENCY LIGHT FIXTURE	AS NOTED	1.	P	PHOTO-ELECTRIC CONTROL (LOCATE ON ROOF, FACE NORTH)	AS NOTED	MOUNT AS PER MFR.
TC	TIME CLOCK	+60"	2.		DIGITAL DAYLIGHT SENSOR	CEILING	SEE DIAGRAM, SPEC.

POWER

IG	ISOLATED GROUND RECEPTACLE	+18" OR AS NOTED	2. 9.	J	PLUGMOLD	+46" OR AS NOTED	2. SEE SPEC.
T	TAMPER-PROOF RECEPTACLE	+18" OR AS NOTED	2. 9.	DP	FLAT PANEL DISPLAY WALL BOX TVSS RECEPT., DATA AND OTHER DEVICES, REFER TO DIAGRAMS	AS NOTED	SEE DIAGRAM, SPEC. 26 2726
U	DUPLEX RECEPTACLE WITH USB OUTLET	+18" OR AS NOTED	2. 9.	CP	CEILING PROJECTION SYSTEM CEILING BOX	ABOVE CEILING	SEE DIAGRAM, SPEC.
C	CONTROLLED DUPLEX RECEPTACLE	+18" OR AS NOTED	2. 9.		DOORBELL CHIME	+90"	2.
	FOURPLEX RECEPTACLE EMERGENCY POWER (RED)	+18" OR AS NOTED	2. 9. 11.	FB	FLOOR BOX - SEE SCHEDULE	FLOOR	SEE DIAGRAM, SPEC.
C	CONTROLLED FOURPLEX RECEPTACLE	+18" OR AS NOTED	2. 9.	PT	POKE THRU - SEE SCHEDULE	FLOOR	SEE DIAGRAM, SPEC.
	TVSS PROTECTED RECEPTACLE	+18" OR AS NOTED	2. 9.		PANELBOARD		
	SPECIAL PURPOSE OUTLET	+18" OR AS NOTED	2. 10. W/ CAP.		MAIN DISTRIBUTION PANEL		
	CORD DROP		SEE DIAGRAM		TELEPHONE DEMARCATION BOARD		
	CORD REEL		SEE DIAGRAM	CLG	EQUIPMENT CEILING RACK	CEILING	
	TOMBSTONE RECEPTACLE				EQUIPMENT 4-POST RACK / CABINET	AS NOTED	18. SEE SPEC.
	POWER POLE				EQUIPMENT 2-POST RACK	AS NOTED	18. SEE SPEC.
EV EV	SINGLE / DUAL PORT ELECTRICAL VEHICLE CHARGER			M	UTILITY METER / CT CABINET	+72"	6.

TELECOMMUNICATIONS

W	WALL PHONE "XX" INDICATES PURPOSE: SC = SECURITY, AV = AUDIOVISUAL	+60" OR AS NOTED	2.	XX WAP XX WAP	WIRELESS ACCESS POINT, TWO CABLES SOLID = WALL, DASHED = CEILING "XX" INDICATES PURPOSE: SC = SECURITY, AV = AUDIOVISUAL	WALL / CEILING	11.
	DATA OUTLET, ONE CABLE "XX" INDICATES PURPOSE: SC = SECURITY, AV = AUDIOVISUAL	+18" OR AS NOTED	2. 9. 11.				
	DATA OUTLET, TWO CABLES "XX" INDICATES PURPOSE: SC = SECURITY, AV = AUDIOVISUAL	+18" OR AS NOTED	2. 9. 11.	SPL	SPLITTER	ABOVE CEILING	
	DATA OUTLET, THREE CABLES "XX" INDICATES PURPOSE: SC = SECURITY, AV = AUDIOVISUAL	+18" OR AS NOTED	2. 9. 11.	VIA	VIA	ABOVE CEILING	
X	DATA OUTLET, "X" INDICATES QUANTITY "XX" INDICATES PURPOSE: SC = SECURITY, AV = AUDIOVISUAL	+18" OR AS NOTED	2. 9. 11.	BDA	FIBER BDA	ABOVE CEILING	
	DATA OUTLET, SOLID = FLOOR, DASHED = CEILING "XX" INDICATES PURPOSE: SC = SECURITY, AV = AUDIOVISUAL		11.	ANT XX	ANTENNA PS = PUBLIC SAFETY, COM = CELLULAR/COMMERCIAL	CEILING	
	TELEVISION OUTLET, SOLID = FLOOR, DASHED = CEILING	+18" OR AS NOTED	9. 11.				

DEKOLD ARCHITECTURE INC.
104 E 600 S #540, Heber City, UT 84032
(208) 206-7338
www.behance.net/kevindekold
kevindekold@hotmail.com

03/19/2025

Civil — CACHE LANDMARK — 95 W Golf Course Rd St. 101, Logan UT 84321 — (435)713-0099
Landscape — LDG — 328 W 200 S #102, Salt Lake City, UT 84101 — (435)901-3127
Structural — REAVELEY — 675 E 500 S St. 400, Salt Lake City, UT 84102 — (801)505-4026
Mechanical — ROYAL — 1837 S E Bay Blvd, Provo, UT 84606 — (801)375-2226
Electrical — BNA CONSULTING — 4225 W Lake Park Blvd St. 275, West Valley City, UT 84121 — (435)668-3670

WEST VALLEY CITY AIS
RESIDENTIAL FA
1739 WEST LAKE PARK DR
WEST VALLEY CITY, UT 84119

REVISIONS:
1
2
3

SHEET NUMBER:
E0.01
03/19/2025

BNA CONSULTING
4225 Lake Park Blvd, Suite 275
West Valley City, UT 84120
P: 801.332.2186
F: 801.332.2305
www.bnaconsulting.com

Drawn Checked

LIGHT FIXTURE SCHEDULE

LIGHT FIXTURE ABBREVIATION SCHEDULE — PROJECT MANAGER: IAN MADISON

A.F.F.	ABOVE FINISH FLOOR	SCBA	STANDARD PAINTED COLOR AS SELECTED BY THE ARCHITECT
WALL@CLG	WALL MOUNT AT CORNER OF WALL AND CEILING	CFBA	CUSTOM FINISH AS SELECTED BY THE ARCHITECT
CCBA	CUSTOM PAINTED COLOR AS SELECTED BY THE ARCHITECT	SFBA	STANDARD FINISH AS SELECTED BY THE ARCHITECT

LIGHT FIXTURE GENERAL NOTES

1. REFER TO ARCHITECTURAL REFLECTED CEILING PLANS FOR LOCATIONS OF LIGHT FIXTURES AND, CONFIRM CEILING TYPES WITH LIGHT FIXTURE TRIMS. BRING ALL DISCREPANCIES OF LOCATIONS AND QUANTITIES TO THE ATTENTION OF THE ARCHITECT AND ELECTRICAL ENGINEER PRIOR TO BIDDING.
2. REFER TO ARCHITECTURAL ELEVATIONS FOR MOUNTING HEIGHTS AND LOCATIONS OF LIGHT FIXTURES. BRING ALL DISCREPENCIES TO THE ATTENTION OF THE ARCHITECT PRIOR TO BIDDING.
3. REFER TO THE SPECIFICATIONS FOR OTHER LIGHT FIXTURE, FUSING, LED DRIVERS, AND LAMP REQUIREMENTS AND ACCEPTABLE MANUFACTURERS.
4. CONFIRM AVAILABLE MOUNTING DEPTHS OF ALL LIGHT FIXTURES AND COMPARE WITH DEPTHS SHOWN ON SHOP DRAWINGS. BRING ALL POTENTIAL CONFLICT AREAS TO THE ATTENTION OF THE ARCHITECT AND ELECTRICAL ENGINEER PRIOR TO RELEASE.
5. REFER TO LIGHTING PLANS FOR ALL LINEAR FIXTURE LENGTHS. THE CATALOG NUMBER IS BASED ON THE FIXTURE SPECIFIED AND MAY NOT REFLECT THE QUANTITY OR OVERALL LENGTH OF LINEAR FIXTURES REQUIRED. CONTRACTOR TO NOTE THAT VARIOUS FIXTURE LENGTHS MAY BE REQUIRED TO ACHIEVE THE OVERALL RUN LENGTH.
6. REFER TO LIGHTING PLANS FOR ALL UNDERCABINET FIXTURE LENGTHS. THE CATALOG NUMBER IS BASED ON THE FIXTURE SPECIFIED AND MAY NOT REFLECT THE QUANTITY OR OVERALL LENGTH OF THE UNDERCABINET FIXTURES REQUIRED. CONTRACTOR TO NOTE THAT VARIOUS FIXTURE LENGTHS MAY BE REQUIRED TO ACHIEVE THE OVERALL RUN LENGTH OR TO FIT WITHIN THE MILLWORK. COORDINATE FIXTURE LAYOUT WITH MILLWORK SHOP DRAWINGS PRIOR TO LIGHTING SUBMITTALS.
7. WHEN A CONTRADICTION EXISTS BETWEEN A SPECIFIC MODEL NUMBER AND THE DESCRIPTION, NOTIFY THE ELECTRICAL ENGINEER AND/OR LIGHTING DESIGNER.
8. PRIOR APPROVALS ARE REQUIRED BEFORE BIDDING THE PROJECT AND SHALL BE SUBMITTED TO THE ELECTRICAL ENGINEER'S OFFICE AT LEAST (8) EIGHT WORKING DAYS BEFORE THE BID. PRIOR APPROVALS RECEIVED AFTER THIS TIME PERIOD SHALL BE REJECTED.
9. REFER TO SPECIFICATIONS 20 0500, 26 5100 & 26 5600 (16001, 16510 & 16551).
10. VALUE ENGINEERING CONDUCTED WITHOUT THE DESIGN TEAM IE; ARCHITECT, ENGINEER & LIGHTING CONSULTANT/DESIGNER WILL NOT BE ALLOWED, REVIEWED OR APPROVED.

TYPE	DESCRIPTION	MFR.	CATALOG #	VOLTS	TOTAL WATTS	LAMP TYPE	DIMMING TYPE	DELIVERED LUMENS	COLOR TEMP	CRI
D1	SURFACE MOUNT DOWNLIGHT VERY THIN PROFILE, 6-7" DIAMETER WHITE FINISH, DIFFUSE LENS DIMMABLE DRIVER WITH COMPATIBLE CONTROL SWITCH SUITABLE FOR WET LOCATIONS WITH COVERED CEILING	JUNO	JSF 7IN 10LM SWWS 90CRI WH OR OWNER APPROVED EQUAL	120 V	13 VA	LED	0-10V	1,000	3500 K	90
DL2	SURFACE MOUNT DOWNLIGHT VERY THIN PROFILE, 6-7" DIAMETER WHITE FINISH, DIFFUSE LENS DIMMABLE DRIVER WITH COMPATIBLE CONTROL SWITCH SUITABLE FOR WET LOCATIONS WITH COVERED CEILING, 3KK, 90 CRI	JUNO	JSF 7IN 10LM SWWS 90CRI WH OR OWNER APPROVED EQUAL	120 V	13 VA	LED	0-10V	1,000	3500 K	90
DL2X	SURFACE MOUNT DOWNLIGHT VERY THIN PROFILE, 6-7" DIAMETER WHITE FINISH, DIFFUSE LENS DIMMABLE DRIVER WITH COMPATIBLE CONTROL SWITCH SUITABLE FOR WET LOCATIONS WITH COVERED CEILING, 3SK, 90 CRI, PROVIDE EMERGENCY BATTERY	JUNO	JSF 7IN 10LM SWWS 90CRI WH IIS50 I OR OWNER APPROVED EQUAL	120 V	13 VA	LED	0-10V	1,000	3500 K	90
ELVP	VAPORTIGHT OUTDOOR 40K WITH EMERGENCY BATTERY	LITHONIA	DMW2 L24 2000LM PCL WD MVOLT 40K 80CRI E10WCP OR OWNER APPROVED EQUAL	120 V	18 VA	LED		2,530	4000 K	80
F1F	1X4 SURFACE MOUNT FLAT PANEL TROFFER ULTRA LOW PROFILE WITH DIRECT CEILING MOUNT KIT SEAMLESS FRAME, SATIN WHITE LENS, 0-10V DIMMING STANDARD SET CONFIGURATION TO 3500K AND 3300 LUMENS	LITHONIA	CPANL 1X4 AL01 SWW7 M4 DCMK 14 OR OWNER APPROVED EQUAL	120 V	22 VA	LED	0-10V	3,500	3500 K	80
F1FX	1' x 4' FLUSH MOUNTED LED TROFFER, PROVIDE EMERGENCY BATTERY	LITHONIA	CPANL 1X4 AL01 SWW7 M4 DCMK 14 ILBLP CP10 HE SD OR OWNER APPROVED EQUAL	120 V	22 VA	LED		3,500	3500 K	80
F22	2X2 RECESSED FLAT PANEL TROFFER RECESSED IN LAY-IN GRID SEAMLESS FRAME, SATIN WHITE LENS, 0-10V DIMMING STANDARD SET CONFIGURATION TO 3500K AND 3300 LUMENS	LITHONIA	CPANL 2X2 AL01 SWW7 M4 OR OWNER APPROVED EQUAL	120 V	22 VA	LED	0-10V	2,400	3500 K	80
F22X	2X2 RECESSED FLAT PANEL TROFFER RECESSED IN LAY-IN GRID SEAMLESS FRAME, SATIN WHITE LENS, 0-10V DIMMING STANDARD SET CONFIGURATION TO 3500K AND 3300 LUMENS PROVIDE 1400 LUMEN, 90 MINUTE BATTERY BACKUP	LITHONIA	CPANL 2X2 AL01 SWW7 M4 ILBLP CP10 HE SD A OR OWNER APPROVED EQUAL	120 V	22 VA	LED	0-10V	2,400	3500 K	80
OWS1	LED WALL PACK 80 CRI MVOLT SCBA PHOTOCELL CONTROLLED WITH EMERGENCY BATTERY	LITHONIA	WDGE1 LED P2 4000K 80CRI VF MVOLT SRM E4WH PE OR OWNER APPROVED EQUAL	120 V	15 VA	LED		1,900	4000 K	80
OWS2	LED WALL PACK 70 CRI MVOLT SCBA PHOTOCELL CONTROLLED	LITHONIA	WDGE2 P4 40K 80CRI VF MVOLT SRM E20WC PIR OR OWNER APPROVED EQUAL	120 V	35 VA	LED		4,200	4000 K	70
PL1	STREET SCAPE LIGHTING A, REDWOOD ROAD STANDARD LIGHTING	MOUNTAIN STATES LIGHTING	#C0194G-DWG07 64 LED TECTRA; #17SRA-4.5-SGL/SA/SI/30"EXT/SH-BLACK	120 V	50 VA	LED		5,000	4000 K	
PL2	LOW PROFILE AREA LED WITH SHIELD, 20FT SQUARE STRAIGHT STEEL POLE, SCBA PHOTOCELL CONTROLLED	LITHONIA	DSX1-P3-40K-70CRI-TS1-MVOLT-SPA-PIR-HS OR OWNER APPROVED EQUAL	120 V	102 VA	LED		14,600	4000 K	70
VB2	2' LINEAR BATHROOM VANITY BAR MOUNTED ABOVE BATHROOM MIRRORS BRUSHED NICKEL HOUSING WITH WHITE ACRYLIC DIFFUSER SET COLOR TEMP TO 3600K	LITHONIA	FMVCALS 24IN MVOLT 30K35K40K 90CRI BN OR OWNER APPROVED EQUAL	120 V	18 VA	LED		1,500	3500 K	90
X1	SINGLE FACE LED EXIT SIGN WHITE THERMOPLASTIC HOUSING, DUAL VOLTAGE UNIVERSAL CHEVRON ARROWS, NI-CAD BATTERY	LITHONIA	LQM S W 3 G MVOLT ELN	120 V	5 VA	LED				
X2	DOUBLE FACE LED EXIT SIGN WHITE THERMOPLASTIC HOUSING, DUAL VOLTAGE UNIVERSAL CHEVRON ARROWS, NI-CAD BATTERY	LITHONIA	LQM S W 3 G MVOLT ELN	120 V	5 VA	LED				

EQUIPMENT SCHEDULE

CONNECTION TYPE NOTES:

1. NON-FUSED DISCONNECT SWITCH
2. FUSED DISCONNECT SWITCH
3. BREAKER IN ENCLOSURE
4. MANUAL STARTER WITH THERMAL OVERLOAD
5. MAGNETIC STARTER
6. MAGNETIC STARTER/NON-FUSED DISCONNECT COMBINATION
7. MAGNETIC STARTER/FUSED DISCONNECT COMBINATION
8. MAGNETIC STARTER/BREAKER COMBINATION
9. VARIABLE FREQUENCY DRIVE
10. REDUCED VOLTAGE STARTER
11. DIRECT CONNECTION
12. RECEPTACLE/SPECIAL PURPOSE OUTLET/ETC.
13. TWO-SPEED STARTER. COORDINATE WITH MOTOR TYPE
14. SOLID STATE SOFT-STARTER

RESPONSIBILITY LEGEND:

A. FURNISHED, INSTALLED AND CONNECTED UNDER DIVISION 26(16)
B. FURNISHED AND INSTALLED UNDER ANOTHER DIVISION. REQUIRED CONNECTION UNDER DIVISION 26(16)
C. FURNISHED UNDER ANOTHER DIVISION BUT INSTALLED AND CONNECTED UNDER DIVISION 26(16)
D. FURNISHED, INSTALLED AND CONNECTED UNDER ANOTHER DIVISION

CB = CIRCUIT BREAKER

NOTE 1: PER 250.122(A), EQUIPMENT GROUND IS NOT REQUIRED TO BE LARGER THAN THE PHASE CONDUCTOR
NOTE 2: OVERCURRENT PROTECTION DEVICE (OCPD) SHOWN IS LOCATED AT POWER PANEL. ALL FUSING TO BE SIZED IN ACCORDANCE WITH FUSE MFR RECOMMENDATION FOR MOTOR NAME PLATE RATING.
NOTE 3: ALL EQUIPMENT TO BE RATED FOR THE ENVIRONMENT FOR WHICH IT IS INSTALLED.

UNIT	#	DESCRIPTION	ELECTRICAL EQUIPMENT INFORMATION							CONDUIT SIZE	WIRE				OCPD		STARTER/ DISC/ VFD OTHER (SEE NOTES)	REMARKS
			LOAD				VOLTAGE	PHASE	FULL LOAD AMPS		SETS	QTY	SIZE	EQ. GROUND	TYPE	AMPS		
			HP	FLA	MCA	VA												
EF	1	EXHAUST FAN	0.00	0 A	0 A	15 VA	120 V	1	0.1 A	3/4"	1	2	12	12	CB	15 A	4 A	
EF	1	EXHAUST FAN	0.00	0 A	0 A	15 VA	120 V	1	0.1 A	3/4"	1	2	12	12	CB	15 A	4 A	
EF	2	EXHAUST FAN	0.00	0 A	0 A	14 VA	120 V	1	0.1 A	3/4"	1	2	12	12	CB	15 A	4 A	
EF	2	EXHAUST FAN	0.00	0 A	0 A	14 VA	120 V	1	0.1 A	3/4"	1	2	12	12	CB	15 A	4 A	
EH	2	EXHAUST FAN	0.00	0 A	0 A	14 VA	120 V	1	0.1 A	3/4"	1	2	12	12	CB	15 A	4 A	
EWH	1	ELECTRIC WALL HEATER	0.00	0 A	0 A	1500 VA	120 V	1	12.5 A	3/4"	1	2	12	12	CB	20 A	11 A	
F	2.5A	CONDENSING UNIT	0.00	0 A	16.8 A	0 VA	208 V	1	13.4 A	3/4"	1	2	12	12	CB	25 A	2 A	
F	2.5B	FURNACE	0.00	0 A	9.6 A	0 VA	120 V	1	7.7 A	3/4"	1	2	12	12	CB	15 A	4 A	
F	2A	CONDENSING UNIT	0.00	0 A	17.7 A	0 VA	208 V	1	14.2 A	3/4"	1	2	12	12	CB	25 A	2 A	
F	2A	CONDENSING UNIT	0.00	0 A	17.7 A	0 VA	208 V	1	14.2 A	3/4"	1	2	12	12	CB	25 A	2 A	
F	2A	CONDENSING UNIT	0.00	0 A	17.7 A	0 VA	208 V	1	14.2 A	3/4"	1	2	12	12	CB	25 A	2 A	
F	2A	CONDENSING UNIT	0.00	0 A	17.7 A	0 VA	208 V	1	14.2 A	3/4"	1	2	12	12	CB	25 A	2 A	
F	2A	CONDENSING UNIT	0.00	0 A	17.7 A	0 VA	208 V	1	14.2 A	3/4"	1	2	12	12	CB	25 A	2 A	
F	2A	CONDENSING UNIT	0.00	0 A	17.7 A	0 VA	208 V	1	14.2 A	3/4"	1	2	12	12	CB	25 A	2 A	
F	2A	CONDENSING UNIT	0.00	0 A	17.7 A	0 VA	208 V	1	14.2 A	3/4"	1	2	12	12	CB	25 A	2 A	
F	2A	CONDENSING UNIT	0.00	0 A	17.7 A	0 VA	208 V	1	14.2 A	3/4"	1	2	12	12	CB	25 A	2 A	
F	2A	CONDENSING UNIT	0.00	0 A	17.7 A	0 VA	208 V	1	14.2 A	3/4"	1	2	12	12	CB	25 A	2 A	
F	2A	CONDENSING UNIT	0.00	0 A	17.7 A	0 VA	208 V	1	14.2 A	3/4"	1	2	12	12	CB	25 A	2 A	
F	2A	CONDENSING UNIT	0.00	0 A	17.7 A	0 VA	208 V	1	14.2 A	3/4"	1	2	12	12	CB	25 A	2 A	
F	2B	FURNACE	0.00	0 A	9.6 A	0 VA	120 V	1	7.7 A	3/4"	1	2	12	12	CB	15 A	4 A	
F	2B	FURNACE	0.00	0 A	9.6 A	0 VA	120 V	1	7.7 A	3/4"	1	2	12	12	CB	15 A	4 A	
F	3A	CONDENSING UNIT	0.00	0 A	18.1 A	0 VA	208 V	1	14.5 A	3/4"	1	2	12	12	CB	25 A	2 A	
F	3B	FURNACE	0.00	0 A	10 A	0 VA	120 V	1	8.0 A	3/4"	1	2	12	12	CB	15 A	4 A	
WH	1	WATER HEATER	0.00	7.5 A	0 A	0 VA	120 V	1	7.5 A	3/4"	1	2	12	12	CB	15 A	1 A	
WH	2	WATER HEATER	0.00	7.5 A	0 A	0 VA	120 V	1	7.5 A	3/4"	1	2	12	12	CB	15 A	1 A	

BNA CONSULTING
4225 Lake Park Blvd, Suite 275
West Valley City, UT 84120
P: 801.332.2196
F: 801.332.2305
www.bnaconsulting.com

DEKOLD ARCHITECTURE INC.
104 E 600 S #540, Heber City, UT 84032
(208) 206-7338
www.behance.net/kevindekold
kevindekold@hotmail.com

03/19/2025

Civil — CACHE LANDMARK — 95 W Golf Course Rd St. 101, Logan, UT 84321, (435)713-0099
Landscape — LDG — 328 W 200 S #102, Salt Lake City, UT 84101, (435)901-3127
Structural — REAVELEY — 675 E 500 S St. 400, Salt Lake City, UT 84102, (801)505-4026
Mechanical — ROYAL — 1837 S E Bay Blvd, Provo, UT 84606, (801)375-2228
Electrical — BNA CONSULTING — 4225 W Lake Park Blvd St. 275, West Valley City, UT 84121, (435)628-3570

WEST VALLEY CITY AIS
RESIDENTIAL FA
1739 WEST LAKE PARK DR
WEST VALLEY CITY, UT 84119

REVISIONS:

1
2
3

SHEET NUMBER:

E0.02

03/19/2025

3/19/2025 8:05:22 AM

SHEET KEYNOTES

S1	PROVIDE AN OUTLET BY THE RAISED PLANTER BEDS. PROVIDE (1) 3/4" CONDUIT TO PANEL M1 LOCATED IN SECOND LEVEL RM 124. COORDINATE THE LOCATION WITH THE ARCHITECT PRIOR ROUGH-IN.
S2	APPROXIMATE LOCATION OF NEW TRANSFORMER. COORIDATE THE LOCATION WITH ROCKY MOUNTAIN POWER AND CIVIL DRAWINGS TO BRING POWER TO THE SITE. REFER ONE-LINE DIAGRAM FOR MORE INFORMATION.
S3	PROVIDE (1) 3" CONDUIT FROM THE UTILITY TRANSFORMER TO THE MDP PANEL LOCATED IN THE 124 - ELECTRICAL ROOM, ON SECOND FLOOR.
S4	THE POLE LIGHT IS CONTROLLED BY A PHOTOCELL.
S5	INSTALL POLE LIGHT IN REDWOOD ROAD AREA LANDSCAPE AS PER WEST VALLEY CITY CODE 7-10-204. REFER CIVIL DRAWINGS FOR MORE INFORMATION. USE FIXTURE T BY MOUNTAIN STATES LIGHTING. USE POLE #17SRA-4.5-SGL/SA/SI/30"EXT/SH-BLACK BY MOUNTAIN STATES LIGHTING. THE LIGHT IS CONTROLLED BY A PHOTOCELL.USE RIPLEY 6390TF BK, POWERED BY UTILITY. REFER TO DIAGRAM 1 IN THE SHEET E4.03 FOR MORE INFORMATION.
S6	PROVIDE (1) 1-1/2" CONDUIT FOR GATE OPENER FROM M1 PANEL. ALSO PROVIDE (1) 1-1/2" CONDUIT FROM GATE OPENER TO THE GATE CONTROL/ACCESS PAD.
S7	LOCATION OF LOW VOLTAGE UTILTIY PULL BOX. REFER TO CIVIL UTILTIY PLANS FOR CONDUIT REQUIREMENTS FROM PULL BOX TO UTILTIY PEDESTALS. FROM LOW VOLTAGE PULL BOX PROVIDE (1) 1-1/2" CONDUIT TO EACH APARTMENT UNIT.
S8	APPROXIMATE LOCATION OF METER/SERICE DISCONNECT. REFER ONE-LINE DIAGRAM FOR MORE INFORMATION.
S9	COORDINATE WITH CIVIL FOR ANY DEMO. SEE CIVIL PLANS FOR MORE INFORMATION.
S10	INSTALL RESIDENTIAL STREET LIGHT, WVC STANDARD DRAWING LP-01. REFER TO CIVIL DRAWINGS FOR MORE INFORMATION.

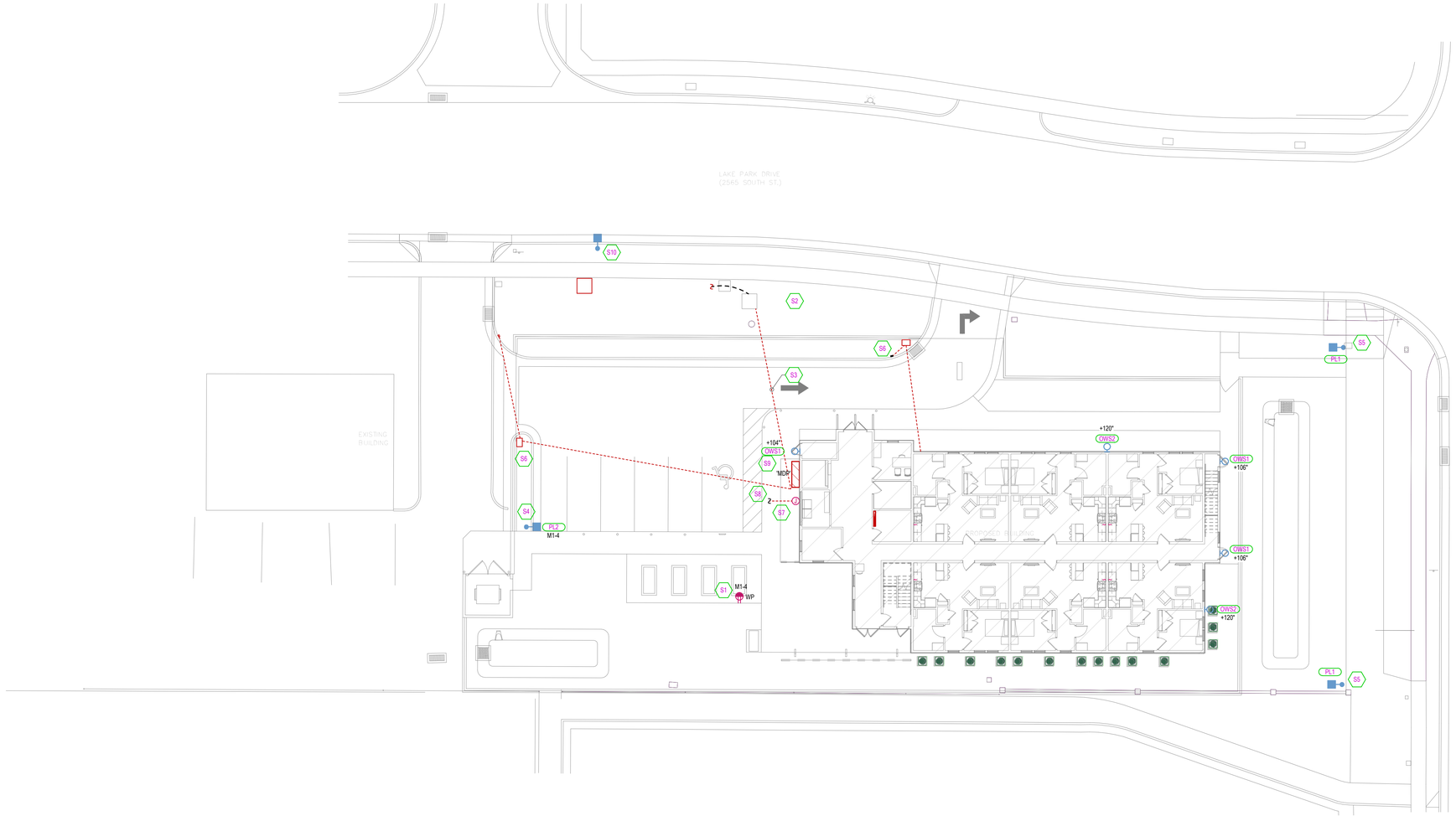

ELECTRICAL SITE PLAN

SCALE = 1/16" = 1'-0"

DEKOLD ARCHITECTURE INC.
104 E 600 S #540, Heber City, UT 84032
(208) 206-7338
www.behance.net/kevindekold
kevindekold@hotmail.com

03/19/2025

Civil
CACHE LANDMARK
95 W Golf Course Rd St. 101
Logan, UT 84321
(435)713-0099

Landscape
LDG
328 W 200 S #102
Salt Lake City, UT 84101
(435)901-3127

Structural
REAVELEY
675 E 500 S St. 400
Salt Lake City, UT 84102
(801)505-4026

Mechanical
ROYAL
1837 S E Bay Blvd
Provo, UT 84606
(801)375-2228

Electrical
BNA CONSULTING
4225 W Lake Park Blvd St. 275
West Valley City, UT 84121
(435)628-3670

WEST VALLEY CITY AIS RESIDENTIAL FA

1739 WEST LAKE PARK DR
WEST VALLEY CITY, UT 84119

REVISIONS:

1
2
3

SHEET NUMBER:

E1.10

03/19/2025

BNA CONSULTING
4225 Lake Park Blvd, Suite 375
West Valley City, UT 84120
P: 801.532.2196
F: 801.533.2305
www.bnaconsulting.com

Drawn By: KD
Checked By: KD

SHEET KEYNOTES

L1	PROVIDE A JUNCTION BOX AND BLANK COVER FOR FUTURE FOR FUTURE SINAGE LIGHTING. STUB (1) 3/4" CONDUIT FROM JUNCTION BOX TO THE M1 PANEL LOCATED IN ROOM 124.
L2	PROVIDE UNSWITCHED LIGHTING CIRCUIT TO CONTROLLED" LIGHT FIXTURE BATTERY.
L3	REFER TO SHEET E3.40 FOR ENLARGED ACCESSIBLE UNIT LIGHTING PLAN.
L5	CONNECT TO NEAREST UNSWITCHED 120V CIRCUIT.
L6	PROVIDE A LIGHT FIXTURE UNDER THE STAIR AREA.

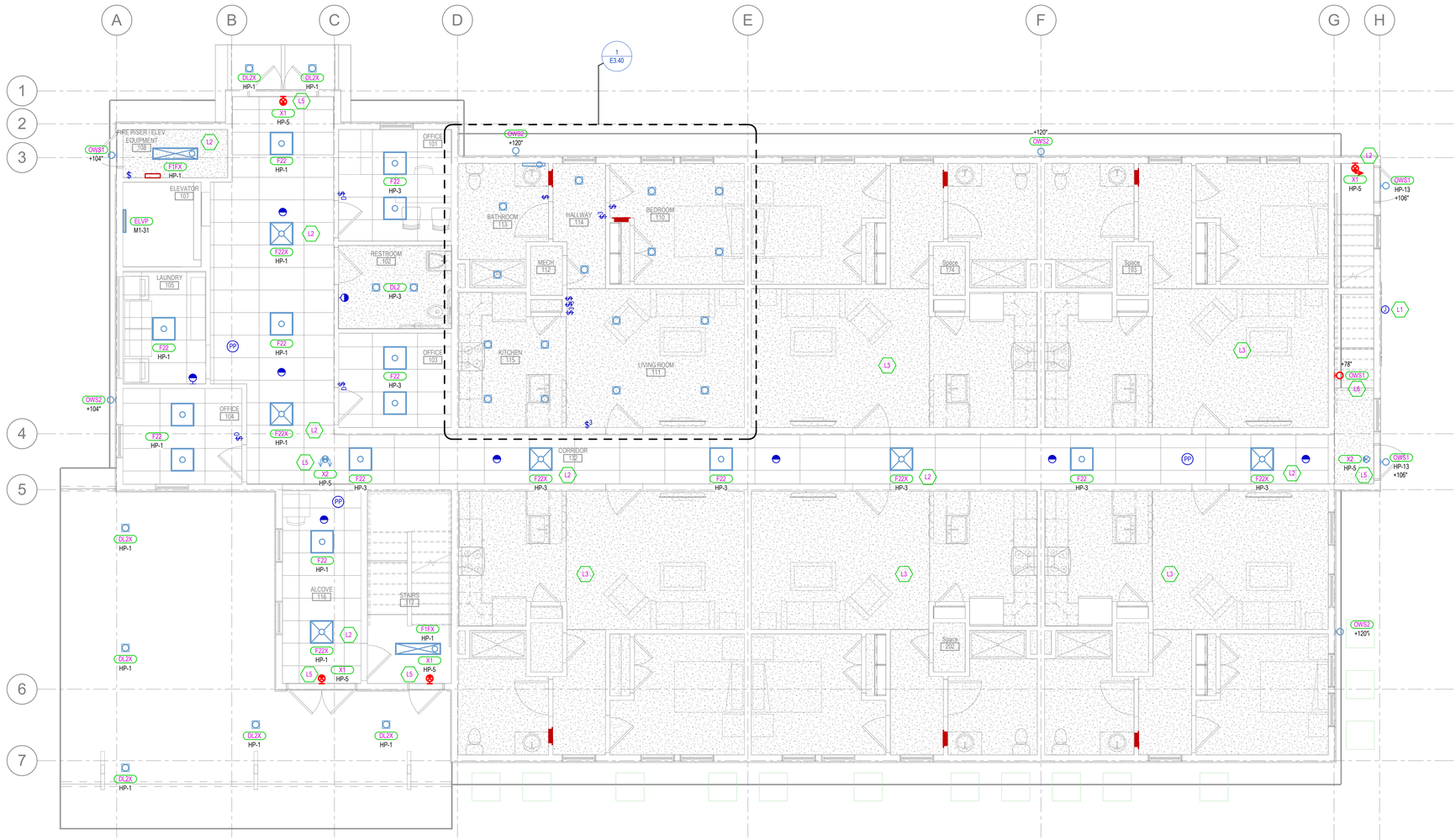

MAIN LEVEL LIGHTING PLAN

SCALE = 3/16" = 1'-0"

DEKOLD ARCHITECTURE INC.
104 E 600 S #540, Heber City, UT 84032
(208) 206-7338
www.behance.net/kevindekold
kevindekold@hotmail.com

03/19/2025

Mechanical
ROYAL
1837 S E Bay Blvd
Provo, UT 84606
(801)375-2228

Structural
REAVELEY
675 E 500 S St. 400
Salt Lake City, UT 84102
(801)509-4026

Landscape
LDG
328 W 200 S #102
Salt Lake City, UT 84101
(435)901-3127

Civil
CACHE LANDMARK
95 W Golf Course Rd St. 101
Logan, UT 84321
(435)713-0099

Electrical
BNA CONSULTING
4225 W Lake Park Blvd St. 275
West Valley City, UT 84121
(435)828-3670

WEST VALLEY CITY AIS RESIDENTIAL FA

1739 WEST LAKE PARK DR
WEST VALLEY CITY, UT 84119

REVISIONS:

1
2
3

SHEET NUMBER:

E3.10

03/19/2025

BNA CONSULTING
4225 Lake Park Blvd, Suite 275
West Valley City, UT 84120
P: 801.532.2196
F: 801.532.2505
www.bnaconsulting.com

SHEET KEYNOTES

L2	PROVIDE UNSWITCHED LIGHTING CIRCUIT TO CONTROLLED" LIGHT FIXTURE BATTERY.
L3	REFER TO SHEET E3.40 FOR ENLARGED ACCESSIBLE UNIT LIGHTING PLAN.
L5	CONNECT TO NEAREST UNSWITCHED 120V CIRCUIT.

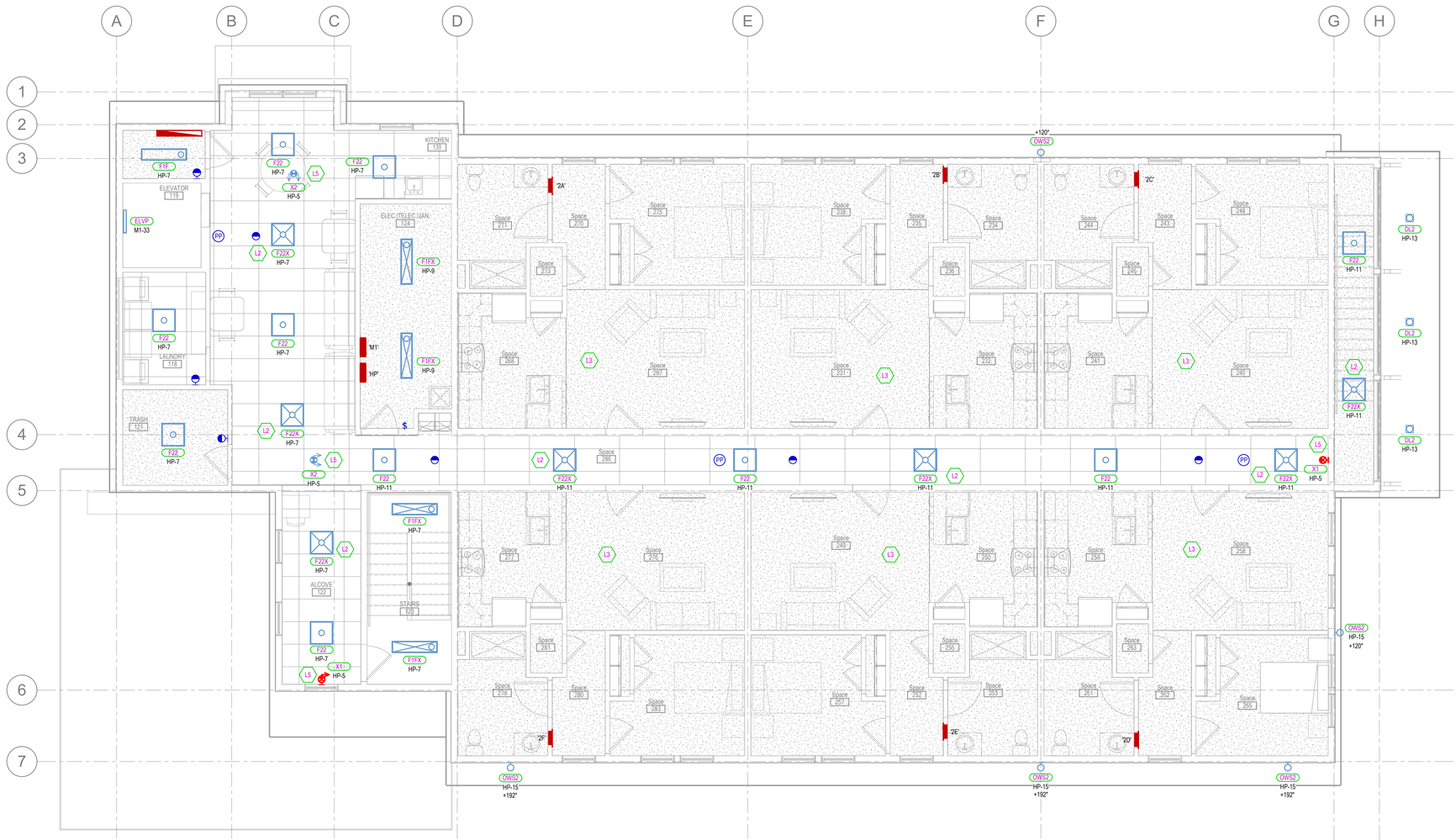

SECOND LEVEL LIGHTING PLAN

SCALE = 3/16" = 1'-0"

BNA CONSULTING
4225 Lake Park Blvd, Suite 375
West Valley City, UT 84120
P: 801.532.2196
F: 801.532.2505
www.bnaconsulting.com

DEKOLD ARCHITECTURE INC.
104 E 600 S #540, Heber City, UT 84032
(208) 206-7338
www.behance.net/kevindekold
kevindekold@hotmail.com

03/19/2025

Civil
CACHE LANDMARK
95 W Golf Course Rd St. 101
Logan, UT 84321
(435)713-0699

Landscape
LDG
328 W 200 S #102
Salt Lake City, UT 84101
(435)901-3127

Structural
REAVELEY
675 E 500 S St. 400
Salt Lake City, UT 84102
(801)505-4026

Mechanical
ROYAL
1837 S E Bay Blvd
Provo, UT 84606
(801)375-2228

Electrical
BNA CONSULTING
4225 W Lake Park Blvd St. 375
West Valley City, UT 84121
(435)828-3670

WEST VALLEY CITY AIS RESIDENTIAL FA

1739 WEST LAKE PARK DR
WEST VALLEY CITY, UT 84119

REVISIONS:

1
2
3

SHEET NUMBER:

E3.11

03/19/2025

SHEET KEYNOTES

E2	PUSHBUTTON FOR ADA ACCESS DOOR OPENER. VERIFY EXACT PLACEMENT WITH ARCHITECT PRIOR TO ROUGH-IN.
E3	INTERLOCK EXHAUST FAN WITH LIGHTING CONTROL/LIGHTING CIRCUIT SERVING THIS AREA.
E5	REFER TO SHEET E3.40 FOR ENLARGED UNIT POWER PLAN.

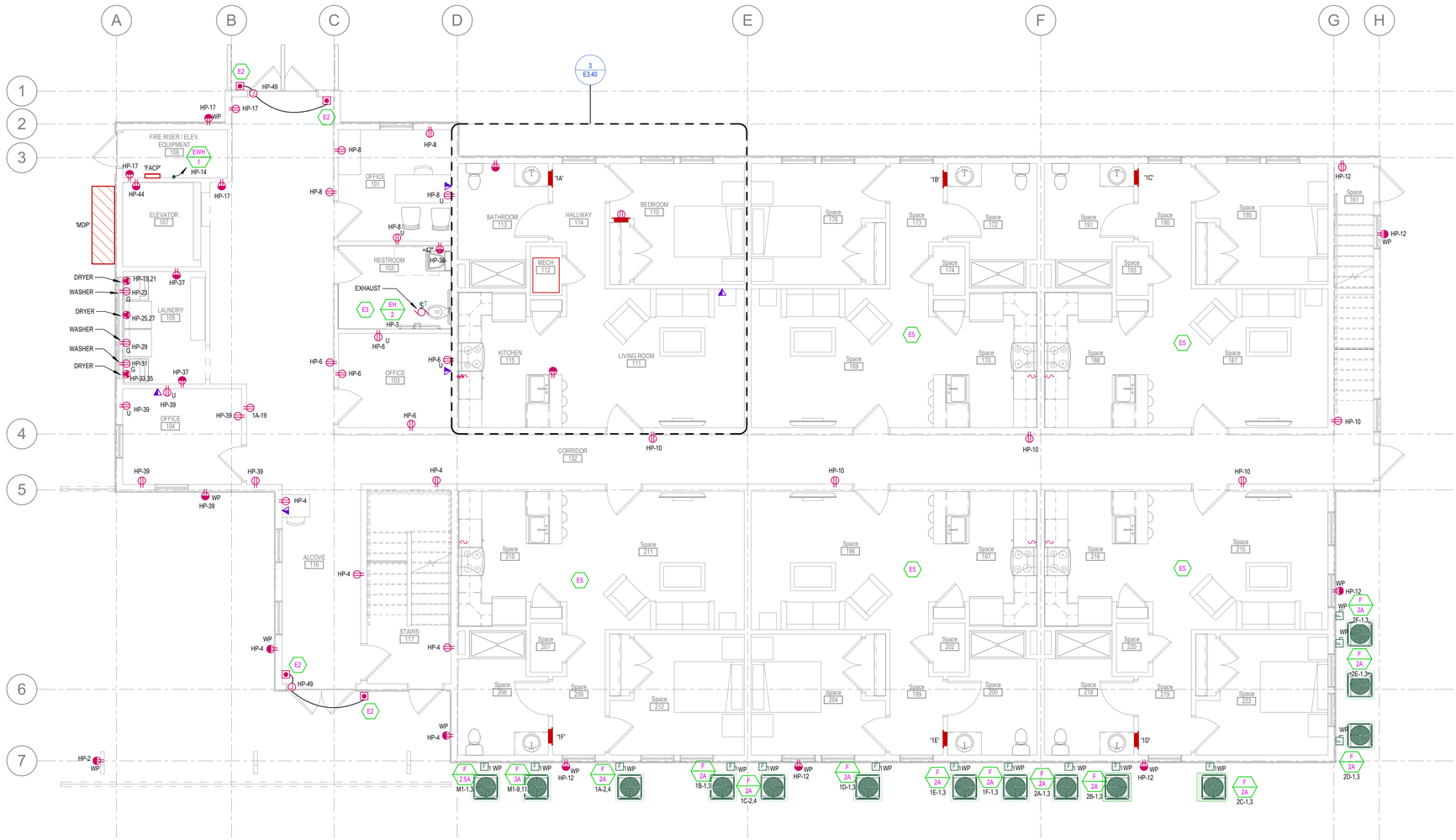

MAIN LEVEL POWER PLAN
SCALE = 3/16" = 1'-0"

DEKOLD ARCHITECTURE INC.
104 E 600 S #540, Heber City, UT 84032
(208) 206-7338
www.behance.net/kevindekold
kevindekold@hotmail.com

03/19/2025

Electrical	Mechanical	Structural	Landscape	Civil
BNA CONSULTING	ROYAL	REAVELEY	LDG	CACHE LANDMARK
4225 W Lake Park Blvd St. 275 West Valley City, UT 84121 (435)628-3670	1837 S E Bay Blvd Provo, UT 84606 (801)375-2228	675 E 500 S St. 400 Salt Lake City, UT 84102 (801)505-4026	328 W 200 S #102 Salt Lake City, UT 84101 (435)901-3127	95 W Golf Course Rd St. 101 Logan, UT 84321 (435)713-0099

WEST VALLEY CITY AIS RESIDENTIAL FA
1739 WEST LAKE PARK DR
WEST VALLEY CITY, UT 84119

REVISIONS:
1
2
3

BNA CONSULTING
4225 Lake Park Blvd, Suite 275
West Valley City, UT 84120
P: 801.532.2196
F: 801.532.2305
www.bnaconsulting.com

SHEET NUMBER:
E3.20
03/19/2025

3/19/2025 8:05:33 AM

SHEET KEYNOTES

E3	INTERLOCK EXHAUST FAN WITH LIGHTING CONTROL/LIGHTING CIRCUIT SERVING THIS AREA.
E5	REFER TO SHEET E3.40 FOR ENLARGED UNIT POWER PLAN.
E6	COORDINATE THE HEIGHT AND LOCATION OF THE RECEPTACLE WITH THE MILLWORK INSTALLER FOR THE IN-CABINET MICROWAVE.
E7	RECEPTACLE FOR FUTURE DISPOSAL. COORDINATE THE HEIGHT AND LOCATION OF THE RECEPTACLE WITH THE MILLWORK INSTALLER.

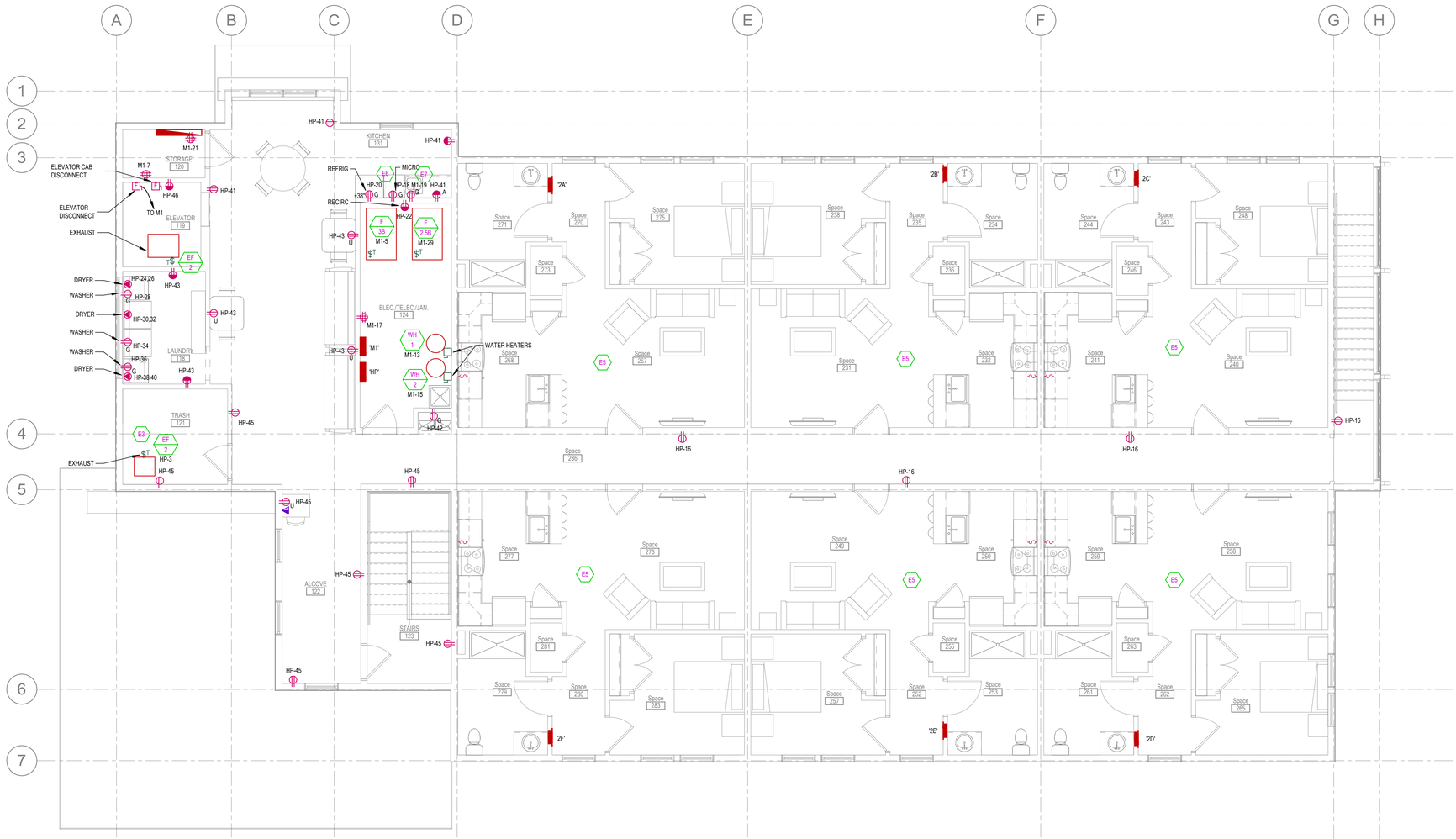

SECOND LEVEL POWER PLAN

SCALE = 3/16" = 1'-0"

DEKOLD ARCHITECTURE INC.
104 E 600 S #540, Heber City, UT 84032
(208) 206-7338
www.behance.net/kevindekold
kevindekold@hotmail.com

03/19/2025

Civil
CACHE LANDMARK
95 W Golf Course Rd St. 101
Logan, UT 84321
(435)713-0699

Landscape
LDG
328 W 200 S #102
Salt Lake City, UT 84101
(435)901-3127

Structural
REAVELEY
675 E 500 S St. 400
Salt Lake City, UT 84102
(801)509-4026

Mechanical
ROYAL
1837 S E Bay Blvd
Provo, UT 84606
(801)375-2228

Electrical
BNA CONSULTING
4225 W Lake Park Blvd St. 275
West Valley City, UT 84121
(435)828-3670

WEST VALLEY CITY AIS RESIDENTIAL FA

1739 WEST LAKE PARK DR
WEST VALLEY CITY, UT 84119

REVISIONS:

1
2
3

SHEET NUMBER:

E3.21

03/19/2025

BNA CONSULTING
4225 Lake Park Blvd, Suite 375
West Valley City, UT 84120
P: 801.532.2196
F: 801.532.2305
www.bnaconsulting.com

SHEET KEYNOTES

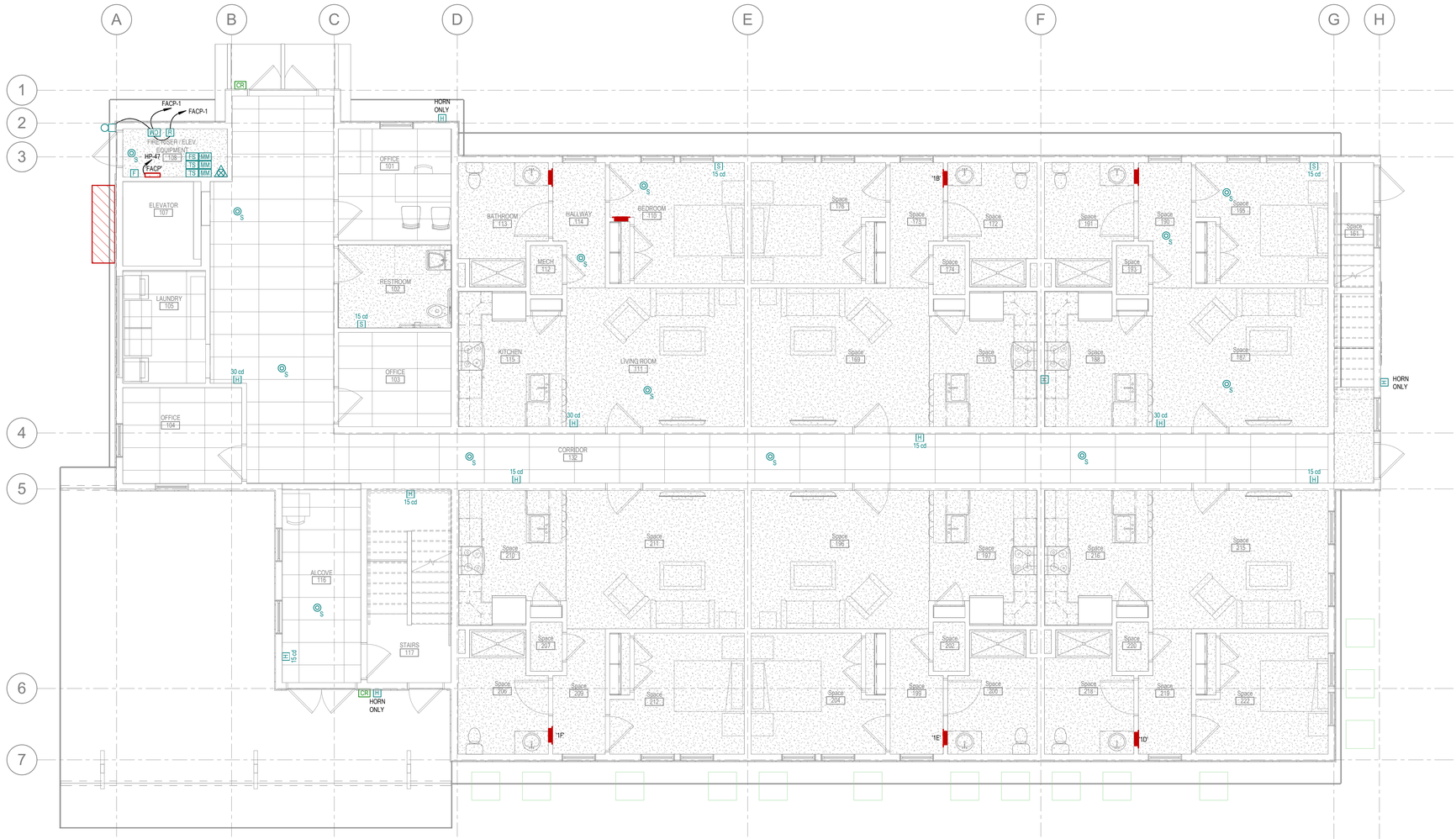

MAIN LEVEL SYSTEM PLAN
SCALE = 3/16" = 1'-0"

DEKOLD ARCHITECTURE INC.
104 E 600 S #540, Heber City, UT 84032
(208) 206-7338
www.behance.net/kevindekold
kevindekold@hotmail.com

03/19/2025

Electrical	Mechanical	Structural	Landscape	Civil
BNA CONSULTING	ROYAL	REAVELEY	LDG	CACHE LANDMARK
4225 W Lake Park Blvd St. 275 West Valley City, UT 84121 (435)628-3670	1837 S E Bay Blvd Provo, UT 84606 (801)375-2228	675 E 500 S St. 400 Salt Lake City, UT 84102 (801)505-4026	328 W 200 S #102 Salt Lake City, UT 84101 (435)901-3127	95 W Golf Course Rd St. 101 Logan, UT 84321 (435)713-0099

WEST VALLEY CITY AIS RESIDENTIAL FA
1739 WEST LAKE PARK DR
WEST VALLEY CITY, UT 84119

REVISIONS:
1
2
3

BNA CONSULTING
4225 Lake Park Blvd, Suite 275
West Valley City, UT 84120
P: 801.532.2196
F: 801.532.2305
www.bnaconsulting.com

SHEET NUMBER:
E3.30
03/19/2025

3/19/2025 8:05:35 AM

SHEET KEYNOTES

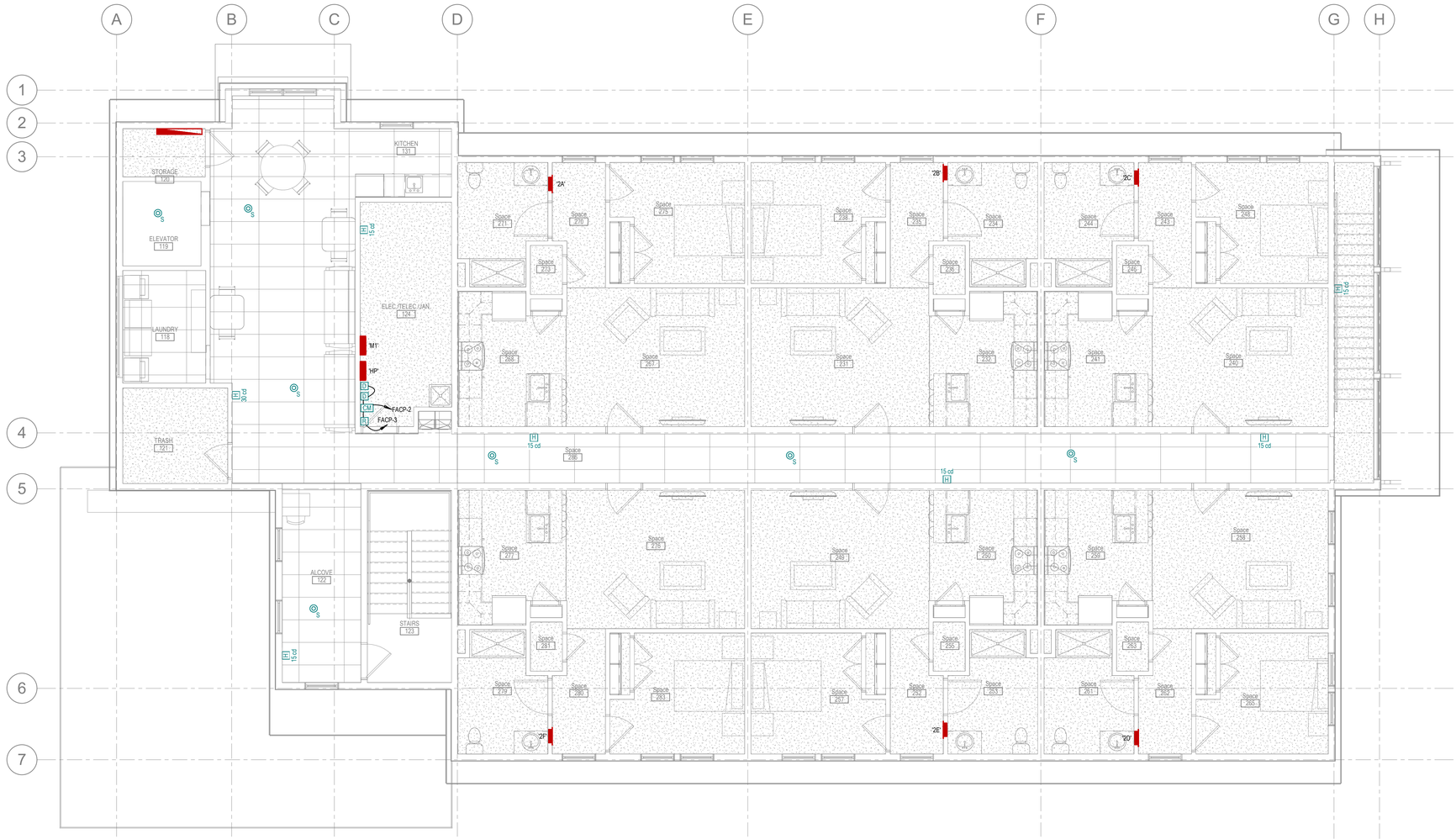

SECOND LEVEL SYSTEM PLAN
SCALE = 3/16" = 1'-0"

DEKOLD ARCHITECTURE INC.
104 E 600 S #540, Heber City, UT 84032
(208) 206-7338
www.behance.net/kevindekold
kevindekold@hotmail.com

03/19/2025

Electrical	Mechanical	Structural	Landscape	Civil
BNA CONSULTING	ROYAL	REAVELEY	LDG	CACHE LANDMARK
4225 W Lake Park Blvd St. 275 West Valley City, UT 84121 (435)628-3670	1837 S E Bay Blvd Provo, UT 84606 (801)375-2228	675 E 500 S St. 400 Salt Lake City, UT 84102 (801)505-4026	328 W 200 S #102 Salt Lake City, UT 84101 (435)901-3127	95 W Golf Course Rd St. 101 Logan, UT 84321 (435)713-0099

WEST VALLEY CITY AIS RESIDENTIAL FA
1739 WEST LAKE PARK DR
WEST VALLEY CITY, UT 84119

REVISIONS:
1
2
3

BNA CONSULTING
4225 Lake Park Blvd, Suite 275
West Valley City, UT 84120
P: 801.332.2196
F: 801.332.2305
www.bnaconsulting.com

SHEET NUMBER:
E3.31
03/19/2025

3/19/2025 8:05:37 AM



1 ENLARGED ACCESSIBLE UNIT LIGHTING PLAN
SCALE = 1/4" = 1'-0"

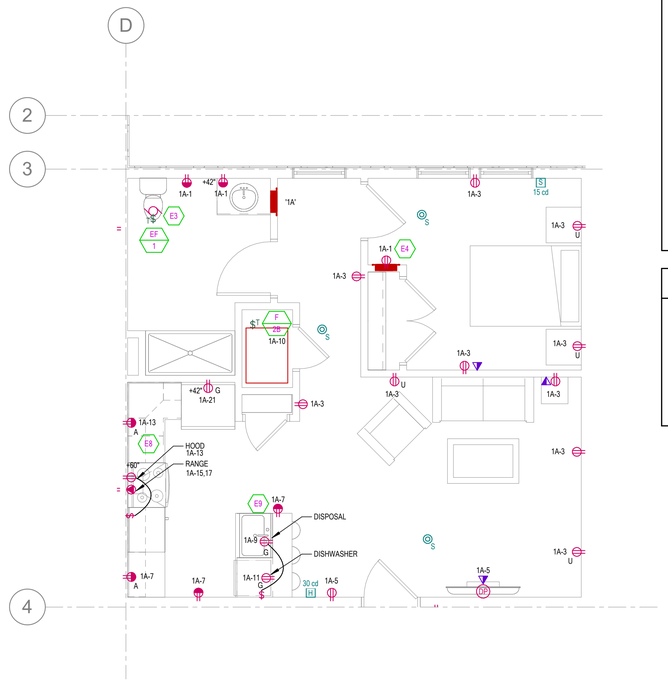

3 ENLARGED ACCESSIBLE UNIT POWER/SYSTEMS PLAN
SCALE = 1/4" = 1'-0"

DWELLING UNIT NOTES

1. ALL INTERIOR RECEPTACLES SHALL BE TAMPER-PROOF TYPE RECEPTACLES.
2. ALL REEPTACLES SHALL BE INSTALED SUCH THAT NO POINT MEASURED HORIZONTALLY ALONG THE FLOOR LINE OF ANY WALL SPACE IS MORE THAN 6' FROM A RECEPTACLE PER NEC 210.52(4). PROVIDE FIRE PUTTY PADS ON ALL RECEPTACLES INSTALLED BACK TO BACK IN A FIRE RATED WALL.
3. ALL REEPTACLES INSTALLED ON KITCHEN COUNTER TOPS SHALL BE INSTALED SUCH THAT NO POINT MEASURED HORIZONTALLY ALONG THE WALL LINE IS MORE THAN 2' FROM A RECEPTACLE PER NEC 210.52
4. ALL RECEPTACLES WITHIN 6' OF THE EDGE OF THE KITCHEN SINK ARE REQUIRED TO BE GFCI PROTECTED PER NEC 210.8(A)(7).
5. PROVIDE ARC FAULT CIRCUIT INTERRUPTER PROTECTION FOR ALL 15 AND 20 AMP BRANCH CIRCUITS SUPPLYING OUTLETS IN AREAS NOTED IN NEC 210.
6. PROVIDE 120V SMOKE DETECTORS WITH BATTERY. CONNECT INTO 120V CIRCUIT WITHIN UNIT. SMOKE DETECTORS IN UNIT SHALL BE INTERCONNECTED SUCH THAT IF ONE DETECTOR GOES INTO ALARM, ALL DETECTORS WITHIN THE UNIT SHALL SOUND ALARM.
7. REFER TO ARCHITECTURAL CEILING PLANS FOR ALL LIGHT FIXTURE LAYOUTS.
8. COORDINATE WITH LIGHT FIXTURE MANUFACTURER FOR DIIMING CAPABILITY OF THE FIXTURES.
9. ALL ELECTRICAL BOXES IN FIRE-RESISTANCE RATED WALLS AND CEILINGS TO BE INSTALLED ACCORDING TO NEC 300.21 AND IBC 714.3.2.
10. ALL FIRE ALARM HORN STROBES LOCATED IN SLEEPING AREAS SHALL LISTED AND LABELED UL464.
11. THE TOPMOST CIRCUIT BREAKER IN THE RESIDENTIAL PANELBOARDS TO BE LOCATED AT A MAXIMUM OF 48" A.F.F.
12. WALL MOUNTED SWITCHES AND ELECTRICAL PANELS SHAL BE NO HIGHER THAN 48" FROM FINISHED FLOOR AND NOT LOWER THAN 15 INCHES FROM FINISHED FLOOR.

SHEET KEYNOTES

E3	INTERLOCK EXHAUST FAN WITH LIGHTING CONTROL/LIGHTING CIRCUIT SERVING THIS AREA.
E4	UNIT MEDIA ENCLOSURE PANEL. REFER TO DIAGRAM F010 FOR CONDUIT/CABLING REQUIREMENTS FROM UTILITY DEMARCATION POINT. MEDIA ENCLOSURE OT INCLUDE THE FOLLOWING(ALL PART NUMBERS LISTED ARE FROM LEVITON. PROVIDE LEVITON DEVICES OR EQUAL): 14" STRUCTURED MEDIA ENCLOSURE WITH VENTED HINGED DOOR (49605-14P), 6-PORT PATCH PANEL (476TM-EXS), 1X4 PASSIVE VIDEO SPLITTER (47690-4C2), AND SURGE RECEPTACLE (47605-ACS).
E8	PROVIDE ADA COMPLIANT RECESSED SWITCH FOR DISPOSAL. COORDINATE HEIGHT AND LOCATION OF THE SWITCH WITH THE MILLWORK INSTALLER.
E9	MOUNT THE RECEPTACLE 6" BELOW COUNTER SURFACE, ON THE END OF THE CABINETS.

BNA CONSULTING
4225 Lake Park Blvd, Suite 275
West Valley City, UT 84120
P: 801.532.2196
F: 801.532.2505
www.bnaconsulting.com

DEKOLD ARCHITECTURE INC.
104 E 600 S #540, Heber City, UT 84032
(208) 206-7338
www.behance.net/kevindekold
kevindekold@hotmail.com

03/19/2025

Civil — CACHE LANDMARK — 95 W Golf Course Rd St. 101, Logan, UT 84321, (435)713-0099
Landscape — LDG — 328 W 200 S #102, Salt Lake City, UT 84101, (435)901-3127
Structural — REAVELEY — 675 E 500 S St. 400, Salt Lake City, UT 84102, (801)505-4026
Mechanical — ROYAL — 1837 S E Bay Blvd, Provo, UT 84606, (801)375-2228
Electrical — BNA CONSULTING — 4225 W Lake Park Blvd St. 275, West Valley City, UT 84121, (435)828-3670

WEST VALLEY CITY AIS RESIDENTIAL FA

1739 WEST LAKE PARK DR
WEST VALLEY CITY, UT 84119

REVISIONS:
1
2
3

SHEET NUMBER:
E3.40
03/19/2025

3/19/2025 8:05:38 AM

ALUMINUM CONDUCTOR & O.C. PROT. FOR TRANSFORMER PRIMARY					ALUMINUM XHHW-2 CONDUCTOR & O.C. PROT. FOR TRANSFORMER SECONDARY △ 480-208/120 Y						
TRANS KVA	O.C. PROT.	TYPE COND.*	GEC (1)	MIN. Z%	O.C. PROT.	TYPE COND.*	COND. AMPS	SETS	CONDUCTOR (3) QUAN.	CONDUCTOR (3) SIZE	CONDUIT SIZE	BONDING JUMPER (2)
15	30	30	8 CU	3	60	T44-1	70	1	4	4 CU	1-1/2"	8 CU
30	50	36	8 CU	3	100	T41X-1	120	1	4	1/0	2"	8 CU
45	70	34	4 CU	3	175	T44X-1	180	1	4	4/0	2-1/2"	4 CU
75	125	32X	2 CU	3	225	T435-1	250	1	4	350	3"	1/0 AL
112.5	175	34X	2 CU	4	400	T425-2	410	2	4	250	3"	1/0 AL
150	300	350	2/0 CU	4	600	T450-2	620	2	4	500	4"	4/0 AL
225	400	375	2/0 CU	4	800	T440-3	810	3	4	400	4"	4/0 AL
300	600	350-2	3/0 CU	5	1200	T450-4	1240	4	4	500	4"	250 AL
500	800	340-3	3/0 CU	5	1600	T440-6	1620	6	4	400	4"	300 AL
750	1200	350-4	3/0 CU	5	3000	T450-10	3100	10	4	500	4"	750 AL

* SEE SCHEDULE FOR CONDUIT AND WIRE SIZE

NOTES:

(1) GROUNDING ELECTRODE CONDUCTOR. (NEC 250.66)

(2) SUPPLY SIDE BONDING JUMPER. (NEC 250.102 (C)(1))

(3) XHHW INSULATION.

SHEET KEYNOTES

X1	COORDINATE WITH ROCKY MOUNTAIN POWER AND INLCUDE ALL COSTS TO PROVIDE TRENCHING, CONDUIT, BACKFILL, ETC. RELATED OT PRIMARY POWER
X3	PROVIDE PERMANENT PLAQUE AT EACH METER NOTING BUILDING ADDRESS AND UNIT NUMBER.
X6	NEW 120/208V, 3PH PAD MOUNTED TRANSFORMER. COORDINATE ALL CONNECTION REQUIREMENTS WITH ROCKY MOUNTAIN POWER.
X7	PROVIDE SPACE FOR FUTURE SOLAR ARRAY CONNECTION.

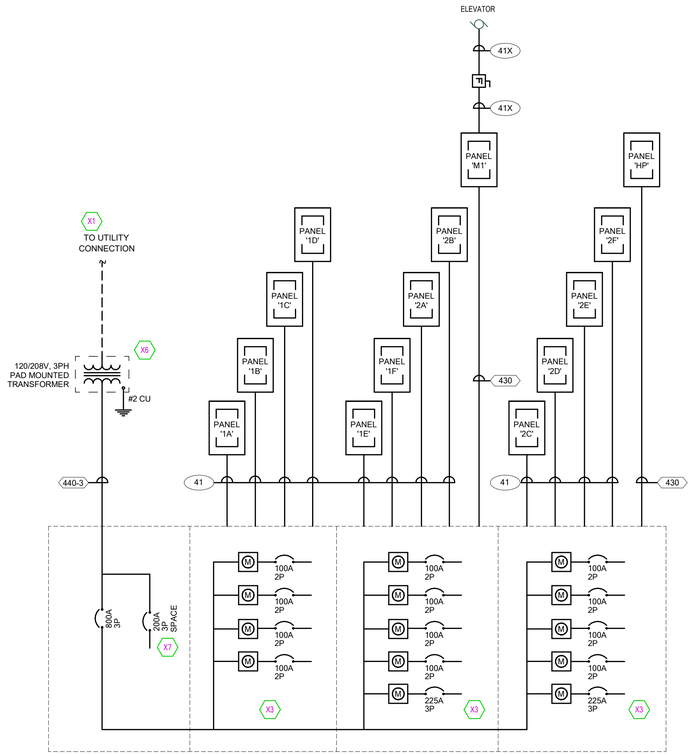

800A METER MODULE METER CENTER, NEMA 3R
120/208V 3 PHASE / 4 WIRE
25,000 AIC

1 ONE-LINE DIAGRAM

COPPER CONDUCTOR & CONDUIT SCHEDULE

TYPE	AMP.	COND. SIZE	CONDUCTOR QUAN.	CONDUCTOR SIZE	INSULATION	EQ. GND. COND.
20	30	3/4"	2	10	THHN THWN	10
30	30	3/4"	3	10	THHN THWN	10
40	30	3/4"	4	10	THHN THWN	10
28	40	1"	2	8	THHN THWN	10
38	40	1"	3	8	THHN THWN	10
48	40	1"	4	8	THHN THWN	10
26	55	1"	2	6	THHN THWN	8
36	55	1"	3	6	THHN THWN	8
46	55	1"	4	6	THHN THWN	8
24	70	1"	2	4	THHN THWN	8
34	70	1-1/4"	3	4	THHN THWN	8
44	70	1-1/4"	4	4	THHN THWN	8
23	85	1-1/4"	2	3	THHN THWN	8
33	85	1-1/4"	3	3	THHN THWN	8
43	85	1-1/2"	4	3	THHN THWN	8
32	95	1-1/2"	3	2	THHN THWN	6
42	95	1-1/2"	4	2	THHN THWN	6
31	110	1-1/2"	3	1	THHN THWN	6
41	110	2"	4	1	THHN THWN	6
51	88	2"	5*	1	THHN THWN	6
31X	150	2"	3	1/0	THHN THWN	6
41X	150	2"	4	1/0	THHN THWN	6
51X	120	2"	5*	1/0	THHN THWN	6
32X	175	2"	3	2/0	THHN THWN	6
42X	175	2"	4	2/0	THHN THWN	6
52X	140	2"	5*	2/0	THHN THWN	6
33X	200	2"	3	3/0	THHN THWN	6
43X	200	2"	4	3/0	THHN THWN	6
53X	160	2-1/2"	5*	3/0	THHN THWN	6
34X	230	2-1/2"	3	4/0	THHN THWN	4
44X	230	2-1/2"	4	4/0	THHN THWN	4
54X	184	2-1/2"	5*	4/0	THHN THWN	4
325	255	3"	3	250	THHN THWN	4
425	255	3"	4	250	THHN THWN	4
525	204	3"	5*	250	THHN THWN	4
335	310	3"	3	350	THHN THWN	3
435	310	3"	4	350	THHN THWN	3
535	248	3"	5*	350	THHN THWN	3
350	380	4"	3	500	XHHW	3
450	380	4"	4	500	XHHW	3
550	304	4"	5*	500	XHHW	3

COPPER CONDUCTOR & CONDUIT SCHEDULE FOR PARALLEL RUNS

TYPE	MAX. O.C. PROT.	COND. AMPS	SETS	CONDUCTOR QUAN.	CONDUCTOR SIZE	CONDUIT SIZE	EQ. GND. COND.
44X-2	400	460	2	4	4/0	2-1/2"	3
54X-2	400	368	2	5*	4/0	3"	3
335-2	600	620	2	3	350	3"	1
435-2	600	620	2	4	350	3"	1
550-2	600	608	2	5*	500	3"	1
350-2	800	760	2	3	500	4"	1/0
450-2	800	760	2	4	500	4"	1/0
535-3	800	744	3	5*	350	4"	1/0
350-3	1000	1140	3	3	500	4"	2/0
450-3	1000	1140	3	4	500	4"	2/0
550-4	1000	1216	4	5*	500	4"	2/0
335-4	1200	1240	4	3	350	3"	3/0
435-4	1200	1240	4	4	350	3"	3/0
550-4	1200	1216	4	5*	350	3"	3/0
340-5	1600	1675	5	3	400	3"	4/0
440-5	1600	1675	5	4	400	3"	4/0
540-6	1600	1675	6	5*	400	4"	4/0
440-6	2000	2010	6	4	400	4"	250
450-7	2500	2665	7	4	500	4"	350
450-8	3000	3040	8	4	500	4"	400
450-11	4000	4180	11	4	500	4"	500

NOTES:
IN PARALLEL RUNS SIZE GND. COND. IN ACCORDANCE WITH NEC PARA. 250-122.

GND. CONDUCTOR MAY BE DELETED ON SERVICE ENTRANCE CONDUCTORS

* 200% NEUTRAL, DERATED TO 80% BASED ON NEC 310.15.B(5)(C)

** COPPER CONDUCTOR (XHHW)

ALUMINUM CONDUCTOR & CONDUIT SCHEDULE

TYPE	AMP.	COND. SIZE	CONDUCTOR QUAN.	CONDUCTOR SIZE	INSULATION	EQ. GND COND.(AL)
31X	120	2"	3	1/0	XHHW-2	4
41X	120	2"	4	1/0	XHHW-2	4
51X	96	2"	5*	1/0	XHHW-2	4
32X	135	2"	3	2/0	XHHW-2	4
42X	135	2"	4	2/0	XHHW-2	4
52X	108	2"	5*	2/0	XHHW-2	4
33X	155	2"	3	3/0	XHHW-2	4
43X	155	2"	4	3/0	XHHW-2	4
53X	124	3"	5*	3/0	XHHW-2	4
34X	180	2"	3	4/0	XHHW-2	4
44X	180	3"	4	4/0	XHHW-2	4
54X	144	3"	5*	4/0	XHHW-2	2
325	205	2"	3	250	XHHW-2	2
425	205	3"	4	250	XHHW-2	2
525	164	3"	5*	250	XHHW-2	2
330	230	3"	3	300	XHHW-2	2
430	230	3"	4	300	XHHW-2	2
530	184	3"	5*	300	XHHW-2	2
335	250	3"	3	350	XHHW-2	2
435	250	3"	4	350	XHHW-2	2
535	200	3"	5*	350	XHHW-2	2
340	270	3"	3	400	XHHW-2	2
440	270	3"	4	400	XHHW-2	2
540	216	3"	5*	400	XHHW-2	2
350	310	4"	3	500	XHHW-2	1
450	310	4"	4	500	XHHW-2	1
550	248	4"	5*	500	XHHW-2	1
375	385	4"	3	750	XHHW-2	1
475	385	4"	4	750	XHHW-2	1
575	308	4"	5*	750	XHHW-2	1

ALUMINUM CONDUCTOR & CONDUIT SCHEDULE FOR PARALLEL RUNS

TYPE	MAX. O.C. PROT.	COND. AMPS	SETS	CONDUCTOR QUAN.	CONDUCTOR SIZE	CONDUIT SIZE	EQ. GND. COND.(AL)
325-2	400	410	2	3	250	2-1/2"	2/0
425-2	400	410	2	4	250	2-1/2"	2/0
535-2	400	400	2	5*	350	3"	2/0
350-2	600	620	2	3	500	3"	2/0
450-2	600	620	2	4	500	3"	2/0
535-3	600	600	3	5*	350	3"	2/0
340-3	800	810	3	3	400	2-1/2"	3/0
440-3	800	810	3	4	400	3"	3/0
535-4	800	800	4	5*	350	4"	3/0
375-3	1000	1155	3	3	750	4"	4/0
475-3	1000	1155	3	4	750	4"	4/0
535-5	1000	1000	5	5*	350	4"	4/0
350-4	1200	1240	4	3	500	4"	250
450-4	1200	1240	4	4	500	4"	250
550-5	1200	1240	5	5*	500	4"	250
340-6	1600	1620	6	3	400	4"	350
440-6	1600	1620	6	4	400	4"	350
550-7	1600	1736	7	5*	500	4"	350
475-6	2000	2310	6	4	750	4"	400
475-7	2500	2695	7	4	750	5"	600
475-8	3000	3080	8	4	750	5"	600
475-11	4000	4235	11	4	750	5"	750

NOTES:
IN PARALLEL RUNS SIZE GND. COND. IN ACCORDANCE WITH NEC PARA. 250-122.

GND. CONDUCTOR MAY BE DELETED ON SERVICE ENTRANCE CONDUCTORS

* 200% NEUTRAL, DERATED TO 80% BASED ON NEC 310.15.B(5)(C)

** COPPER CONDUCTOR (XHHW)

PROVIDE COMPACT STRANDED ALUMINUM ASSOCIATION 8000 SERIES ALLOY CONDUCTORS.

PROVIDE TERMINATION FOR ALUMINUM ALLOY CONDUCTORS OF HYDRAULIC COMPRESSION TYPE ONLY, LISTED UNDER UL 486-B, MARKED "AL7CU" FOR 75 DEGREE RATED CIRCUITS.

PROVIDE ALL ELECTRICAL EQUIPMENT WITH PROPER SIZING TO ACCOMMODATE ALUMINUM CONDUCTORS. COORDINATE WITH EQUIPMENT SUPPLIER.

DEKOLD ARCHITECTURE INC.
104 E 600 S #540, Heber City, UT 84032
(208) 206-7338
www.behance.net/kevindekold
kevindekold@hotmail.com

03/19/2025

Civil — CACHE LANDMARK — 95 W Golf Course Rd St. 101, Logan UT 84321, (435)713-0699
Landscape — LDG — 328 W 200 S #102, Salt Lake City, UT 84101, (435)901-3127
Structural — REAVELEY — 675 E 500 S St. 400, Salt Lake City, UT 84102, (801)505-4026
Mechanical — ROYAL — 1837 S E Bay Blvd, Provo, UT 84606, (801)375-2228
Electrical — BNA CONSULTING — 4225 W Lake Park Blvd St. 275, West Valley City, UT 84121, (435)868-3570

WEST VALLEY CITY AIS RESIDENTIAL FA

1739 WEST LAKE PARK DR
WEST VALLEY CITY, UT 84119

REVISIONS:

1
2
3

SHEET NUMBER:

E3.50

03/19/2025

BNA CONSULTING
4225 Lake Park Blvd, Suite 275
West Valley City, UT 84120
P: 801.332.2196
F: 801.532.2305
www.bnaconsulting.com

Scale: 1/2" = 1'-0"

MULTIPLE UNITS ON 3Ø FEEDER

Project Name: AIS WEST VALLEY
Job number: 241223
Description: APARTMENT HOUSING 1 BEDROOM

GENERAL LIGHTING: [Table 220.12] General Lighting Load, [220.52] Small Appliance & Laundry

	598	sf	Note 4	
	12	units		
598 sf x 3 W =	21528	W		
12 units x 3000 W =	36000	W		
Subtotal =	57528	W		
LIGHTING LOAD DEMAND FACTORS: [Table 220.42]				
0 to 3,000 sf @ 100%	3000	3000.0	(x 100%)	
3001 to 120,000 sf @ 35%	54528	19084.8	(x 35%)	
more than 120,000 sf @ 25%	0	0.0		
Subtotals =	57528	22084.8		
Non-Diversified Total =	57.53	kW		
Diversified Total =	22.08	kW		22.08 kW
FIXED APPLIANCES: [220.53]				
Dishwasher	1200	W		
Disposal	1200	W		
Microwave	1500	W		
Refrigerator	1500	W		
Steam Shower		W		
Water Heater		W		
Spa Tub		W		
Other		W		
No. of Appliances =	6	Appliances		
Load Subtotal =	5.40	kW		
Diversified Load =	4.05	kW	(x 75%)	
Diversified Load x 12 units =	48.60	kW		48.60 kW
DRYER: [Table 220.54]				
Diversified Quantity	8		Notes 1 & 3	
Demand Load =	60.00	%		
Diversified Load =	3000	W	(x 60%)	
Total Demand Load 3Ø =	24.00	kW		24.00 kW
RANGE: [Table 220.55 Column C]				
Demand Load =	27000	W	Notes 1 & 3	
Total Demand Load 3Ø =	40.50	kW		40.50 kW
ELECTRIC SPACE HEATING: [220.51]				
Load =		W	Note 2	
Demand Factor =	100	%		
Diversified Load =	0	W		
Diversified Load x 12 units =	0.00	kW		0.00 kW
AIR CONDITIONING:				
Load =	2945	W	Note 2 & 4	
Demand Factor =	100	%		
Diversified Load =	2945	W	(x 100%)	
Diversified Load x 12 units =	35.34	kW		35.34 kW
25% OF THE LARGEST MOTOR				
kW Load =		kW		0.00
			GRAND TOTAL	170.5 kW
			AMPS @ 208V, 3Φ	473.7 AMPS

Note 1: Use twice the maximum number of appliances connected between any two phases. This program takes that into account.
Note 2: Enter larger of heating or air conditioning load but not both.
Note 3: 5000 watts is used for dryer per 220.54. Range kW obtained via Table 220.55 Column C which is good for ranges up to 12kW each
Note 4: Not all units are same square footage or same AC Load. However, this number represents average of all residential units

SINGLE UNIT

GENERAL LIGHTING: [Table 220.12] General Lighting Load, [220.52] Small Appliance & Laundry

	598	sf		
	1	unit		
598 sf x 3 W =	1794	W		
1 unit x 4500 W =	4500	W		
Subtotal =	6294	W		
LIGHTING LOAD DEMAND FACTORS: [Table 220.42]				
0 to 3,000 sf @ 100%	3000	3000.0	(x 100%)	
3001 to 120,000 sf @ 35%	3294	1152.9	(x 35%)	
more than 120,000 sf @ 25%	0	0.0		
Subtotals =	6294	4152.9		
Non-Diversified Total =	6.29	kW		
Diversified Total =	4.15	kW		4.15 kW
FIXED APPLIANCES: [220.53]				
Dishwasher	1200	W		
Disposal	1200	W		
Microwave	1500	W		
Spa Tub		W		
Snow Melt		W		
Water Heater		W		
Refrigerator	1500	W		
Other		W		
No. of Appliances =	6	Appliances		
Load Subtotal =	5.40	kW		
Diversified Load =	4.05	kW	(x 75%)	
Diversified Load x 1 unit =	4.05	kW		4.05 kW
DRYER: [Table 220.54]				
Load =		W		
Demand Factor =	100	%		
Diversified Load =	0	W		
Diversified Load x 1 unit =	0.00	kW		0.00 kW
RANGE: [Table 220.55 Column C]				
Load =	8000	W		
Demand Factor =	100	%		
Diversified Load =	8000	W	(x 100%)	
Diversified Load x 1 unit =	8.00	kW		8.00 kW
ELECTRIC SPACE HEATING: [220-51]				
Load =		W	Note 1	
Demand Factor =	100	%		
Diversified Load =	0	W		
Diversified Load x 1 unit =	0.00	kW		0.00 kW
MOTORS (HVAC): [220.50]				
Load =	2960	W	Note 1	
Demand Factor =	100	%		
Diversified Load =	2960	W	(x 100%)	
Diversified Load x 1 unit =	2.96	kW		2.96 kW
25% OF LARGEST LOAD				
kW Load =	2.00	kW		2.00 kW
			GRAND TOTAL	21.2 kW

Note 1: Enter larger of heating or air conditioning load but not both.

DEKOLD ARCHITECTURE INC.
104 E 600 S #540, Heber City, UT 84032
(208) 206-7338
www.behance.net/kevindekold
kevindekold@hotmail.com

Civil: CACHE LANDMARK, 95 W Golf Course Rd St. 101, Logan, UT 84321, (435)713-0099
Landscape: LDG, 328 W 200 S #102, Salt Lake City, UT 84101, (435)901-3127
Structural: REAVELEY, 675 E 500 S St. 400, Salt Lake City, UT 84102, (801)505-4026
Mechanical: ROYAL, 1837 S E Bay Blvd, Provo, UT 84606, (801)375-2228
Electrical: BNA CONSULTING, 4225 W Lake Park Blvd St. 275, West Valley City, UT 84121, (435)668-3670

03/19/2025

WEST VALLEY CITY AIS
RESIDENTIAL FA
1739 WEST LAKE PARK DR
WEST VALLEY CITY, UT 84119

REVISIONS:
1
2
3

SHEET NUMBER:
E3.51
03/19/2025

BNA CONSULTING
4225 Lake Park Blvd, Suite 275
West Valley City, UT 84120
P: 801.332.2196
F: 801.532.2305
www.bnaconsulting.com

PANELBOARD SCHEDULE

PANEL: M1 **TYPE:** Type 1 **VOLTS:** 120/208 Y **PHASE:** 3 **WIRES:** 4

MOUNTING: SURFACE **LOCATION:** ELEC./TELEC./JAN. 124 **MAINS:** MLO

BUSSING: **FED FROM:**

AMP: 100 A

____ SUBFEED LUGS
____ DOOR-IN-DOOR
____ ISO GROUND
____ 200% NEUTRAL
____ SPD

BRANCH BREAKERS

ITEM	AMPS	TYPE	POLE	WIRE SIZE	CIR. NO.	A	B	C	A	B	C	CIR. NO.	WIRE SIZE	POLE	TYPE	AMPS	ITEM
HVAC	20 A		2	12	1	1398			500			2	12	1		20 A	FUTURE SIGN
--	--	--	--	--	3		1398			382		4	12	1		20 A	PLANTER BEDS
HVAC	20 A		1	12	5			960				6					
RECEPT	20 A		1	12	7	180						8					
HVAC	20 A		2	12	9		1506					10					
--	--	--	--	--	11			1506				12					
WATER HEATER	20 A		1	12	13	900						14					
WATER HEATER	20 A		1	12	15		900					16					
RECEPT	20 A		1	12	17			360				18					
* DISPOSAL ELEC./TELEC./JA...	20 A		1	12	19	1200						20					
RECEPT ELEC./TELEC./JAN. 124	20 A		1	12	21		180					22					
					23							24					
					25							26					
					27							28					
HVAC	20 A		1	12	29			922				30					
ELEV LIGHT	20 A		1	12	31	18						32					
ELEV LIGHT	20 A		1	12	33		18					34					
ELEVATOR	125 A		3	1/0	35			12009				36					
--	--	--	--	--	37	12009						38					
--	--	--	--	--	39		12009					40					
SPARE	20 A	--	1	--	41			0			0	42	--	1	--	20 A	SPARE
SPARE	20 A	--	1	--	43	0			0			44	--	1	--	20 A	SPARE
SPARE	20 A	--	1	--	45		0			0		46	--	1	--	20 A	SPARE
SPARE	20 A	--	1	--	47			0			0	48	--	1	--	20 A	SPARE
						16205	16393	15756	**TOTAL (VA)**								**CONNECTED LOAD TOTAL**
FEED THRU LOAD						136 A	137 A	131 A	**AMPS/PHASE**								48354 VA
0 VA																	

AIC RATING 18000 **AMPS RMS SYSM.**

NOTES:

CIRCUIT BREAKER TYPE:

<BLANK>	THERMAL MAGNETIC CIRCUIT BREAKER
GF	5 mA GROUND FAULT CIRCUIT BREAKER
AF	ARC-FAULT CIRCUIT BREAKER
CO	COMBINATION AFCI/GFCI CIRCUIT BREAKER
EG	30 mA EQUIPMENT GROUND FAULT CIRCUIT BREAKER
ST	SHUNT TRIP CIRCUIT BREAKER

PANELBOARD SCHEDULE

PANEL: 1A (ACCESSIBLE UNIT) **TYPE:** Type 1 **VOLTS:** 120/208 **PHASE:** 1 **WIRES:** 3

MOUNTING: FLUSH **LOCATION:** HALLWAY 114 **MAINS:** MLO

BUSSING: ALUMINUM **FED FROM:**

AMP: 100 A

____ SUBFEED LUGS
____ DOOR-IN-DOOR
____ ISO GROUND
____ 200% NEUTRAL
____ SPD

BRANCH BREAKERS

ITEM	AMPS	TYPE	POLE	WIRE SIZE	CIR. NO.	A	B	A	B	CIR. NO.	WIRE SIZE	POLE	TYPE	AMPS	ITEM
RECEPT	20 A		1	12	1	360		1473		2	12	2		20 A	CU
RECEPT	20 A		1	12	3		900		1473	4	--	--	--	--	--
Other	20 A		1	12	5	180		44		6	12	1		20 A	LIGHTING
RECEPT	20 A		1	12	7		540		182	8	12	1		20 A	LIGHTING
* DISPOSAL	20 A	GF	1	12	9	1200		922		10	12	1		20 A	FURNACE
* DISHWASHER	20 A	GF	1	12	11		1200			12					
RECEPT	20 A		1	12	13	1680				14					
* RANGE/OVEN	20 A	GF	2	12	15		4000			16					
--	--	--	--	--	17	4000				18					
RECEPT	20 A		1	12	19		180			20					
RECEPT	20 A		1	12	21	180				22					
					23					24					
SPARE	20 A	--	1	--	25	0		0		26	--	1	--	20 A	SPARE
SPARE	20 A	--	1	--	27		0		0	28	--	1	--	20 A	SPARE
SPARE	20 A	--	1	--	29	0		0		30	--	1	--	20 A	SPARE
						10038	8475	**TOTAL (VA)**							**CONNECTED LOAD TOTAL**
FEED THRU LOAD						95 A	81 A	**AMPS/PHASE**							18513 VA
0 VA															

AIC RATING 18,000 **AMPS RMS SYSM.**

NOTES:

CIRCUIT BREAKER TYPE:

<BLANK>	THERMAL MAGNETIC CIRCUIT BREAKER
GF	5 mA GROUND FAULT CIRCUIT BREAKER
AF	ARC-FAULT CIRCUIT BREAKER
CO	COMBINATION AFCI/GFCI CIRCUIT BREAKER
EG	30 mA EQUIPMENT GROUND FAULT CIRCUIT BREAKER
ST	SHUNT TRIP CIRCUIT BREAKER

PANELBOARD SCHEDULE

PANEL: HP **TYPE:** Type 1 **VOLTS:** 120/208 Y **PHASE:** 3 **WIRES:** 4

MOUNTING: SURFACE **LOCATION:** ELEC./TELEC./JAN. 124 **MAINS:** MLO

BUSSING: **FED FROM:**

AMP: 225 A

____ SUBFEED LUGS
____ DOOR-IN-DOOR
____ ISO GROUND
____ 200% NEUTRAL
____ SPD

BRANCH BREAKERS

ITEM	AMPS	TYPE	POLE	WIRE SIZE	CIR. NO.	A	B	C	A	B	C	CIR. NO.	WIRE SIZE	POLE	TYPE	AMPS	ITEM
LIGHTING	20 A		1	12	1	333			180			2	12	1		20 A	RECEPT
Other	20 A		1	12	3		275			1080		4	12	1		20 A	RECEPT
LIGHTING	20 A		1	12	5			50			900	6	12	1		20 A	RECEPT
Other	20 A		1	12	7	279			900			8	12	1		20 A	RECEPT
Other	20 A		1	12	9		44			900		10	12	1		20 A	RECEPT
Other	20 A		1	12	11			176			1080	12	12	1		20 A	RECEPT
LIGHTING	20 A		1	12	13	69			1500			14	12	1		20 A	HVAC
LIGHTING	20 A		1	12	15		140			720		16	12	1		20 A	RECEPT
RECEPT	20 A		1	12	17			720			1500	18	12	1	GF	20 A	* MICROWAVE
* DRYER	35 A	GF	2	8	19	2500			1500			20	12	1	GF	20 A	* REFRIGERATOR
--	--	--	--	--	21		2500			180		22	12	1		20 A	RECEPT
* WASHING MACHINE	20 A	GF	1	12	23			1400			2500	24	8	2	GF	35 A	* DRYER
* DRYER	35 A	GF	2	8	25	2500			2500			26	--	--	--	--	--
--	--	--	--	--	27		2500			1400		28	12	1	GF	20 A	* WASHING MACHINE
* WASHING MACHINE	20 A	GF	1	12	29			1400			2500	30	8	2	GF	35 A	* DRYER
* WASHING MACHINE	20 A	GF	1	12	31	1400			2500			32	--	--	--	--	--
* DRYER	35 A	GF	2	8	33		2500			1400		34	12	1	GF	20 A	* WASHING MACHINE
--	--	--	--	--	35			2500			1400	36	12	1	GF	20 A	* WASHING MACHINE
RECEPT	20 A		1	12	37	360			2500			38	8	2	GF	35 A	* DRYER
RECEPT	20 A		1	12	39		1260			2500		40	--	--	--	--	--
RECEPT	20 A		1	12	41			720			180	42	12	1	GF	20 A	RECEPT
RECEPT	20 A		1	12	43	900			180			44		1		20 A	RECEPT
RECEPT	20 A		1	12	45		1260			180		46		1		20 A	RECEPT
FACP	20 A		1	12	47			500			0	48	--	1	--	20 A	SPARE
SECURITY	20 A		1	12	49	500			0			50	--	1	--	20 A	SPARE
						20601	18839	17526	**TOTAL (VA)**								**CONNECTED LOAD TOTAL**
FEED THRU LOAD						173 A	159 A	146 A	**AMPS/PHASE**								56966 VA
0 VA																	

AIC RATING 18000 **AMPS RMS SYSM.**

NOTES:

CIRCUIT BREAKER TYPE:

<BLANK>	THERMAL MAGNETIC CIRCUIT BREAKER
GF	5 mA GROUND FAULT CIRCUIT BREAKER
AF	ARC-FAULT CIRCUIT BREAKER
CO	COMBINATION AFCI/GFCI CIRCUIT BREAKER
EG	30 mA EQUIPMENT GROUND FAULT CIRCUIT BREAKER
ST	SHUNT TRIP CIRCUIT BREAKER

BNA CONSULTING
4225 Lake Park Blvd, Suite 275
West Valley City, UT 84120
P: 801.332.2166
F: 801.532.2305
www.bnaconsulting.com

DEKOLD ARCHITECTURE INC.
104 E 600 S #540, Heber City, UT 84032
(208) 206-7338
www.behance.net/kevindekold
kevindekold@hotmail.com

03/19/2025

Civil
CACHE LANDMARK
95 W Golf Course Rd St. 101
Logan, UT 84321
(435)713-0099

Landscape
LDG
328 W 200 S #102
Salt Lake City, UT 84101
(435)901-3127

Structural
REAVELEY
675 E 500 S St. 400
Salt Lake City, UT 84102
(801)505-4026

Mechanical
ROYAL
1837 S E Bay Blvd
Provo, UT 84606
(801)375-2228

Electrical
BNA CONSULTING
4225 W Lake Park Blvd St. 275
West Valley City, UT 84121
(435)668-3670

WEST VALLEY CITY AIS RESIDENTIAL FA

1739 WEST LAKE PARK DR
WEST VALLEY CITY, UT 84119

REVISIONS:

1
2
3

SHEET NUMBER:

E3.52

03/19/2025

NOTES

1. PROVIDE PULL CORD IN ALL EMPTY RACEWAYS.
2. BOND ALL RACEWAYS (SIZED PER NEC REQUIREMENTS) TO ELECTRICAL SERVICE GROUND

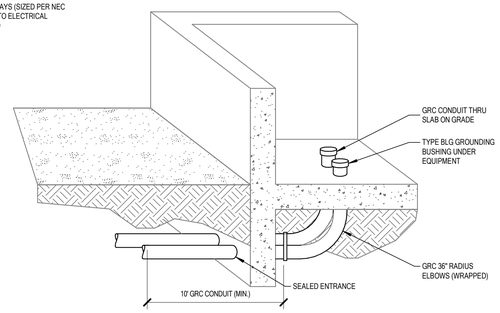

DIAGRAM F002 BUILDING ENTRANCE CONDUITS
NTS

NOTE:
TYPICAL OF 2'X2', 2'X4', 1'X4', AND 4'X4' FIXTURES

1. #12 GA. WIRE HANGER AT EACH CORNER OF FIXTURE (TYP.) INDEPENDENT OF CEILING SUPPORT SYSTEM AND IDENTIFIED AS PER SPECIFICATIONS.
2. FIXTURE CLAMP. PROVIDE ONE PER SIDE PER FIXTURE.

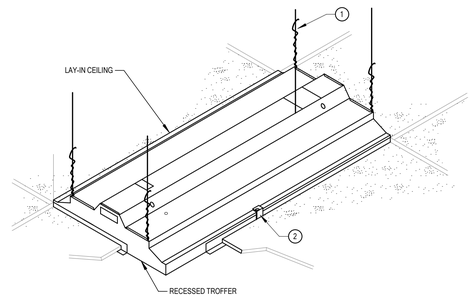

DIAGRAM A001 TYP. RECESSED FIXTURE MOUNTING
NTS

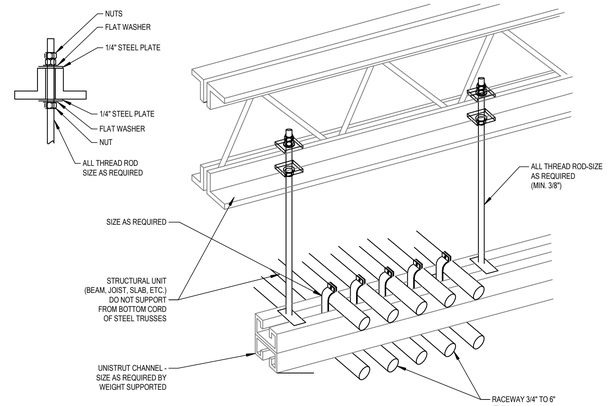

DIAGRAM H001 TYPICAL TRAPEZE CONDUIT RACK
NTS

NOTES:

TMGB - TELECOMMUNICATIONS MAIN GROUNDING BUS.

IBT - INTERSYSTEM BONDING TERMINAL.

BC - BONDING CONDUCTOR.

MBJ - MAIN BONDING JUMPER.

EGB - EQUIPMENT GROUNDING BUS.

TGB - TELECOMMUNICATIONS GROUNDING BUS.

NOTES:

1. SIZE PER NEC 250.66.
2. PROVIDE GROUNDING/BONDING SYSTEM CONNECTIONS TO MAIN ELECTRICAL SERVICE AT THE LOCATION OF THE THE MAIN SERVICE DISCONNECT.

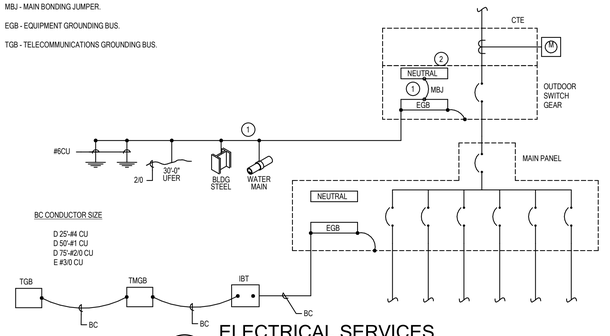

BC CONDUCTOR SIZE

D 25'-#4 CU
D 50'-#1 CU
D 75'-#2/0 CU
E #3/0 CU

DIAGRAM F026 ELECTRICAL SERVICES GROUNDING/BONDING
NTS

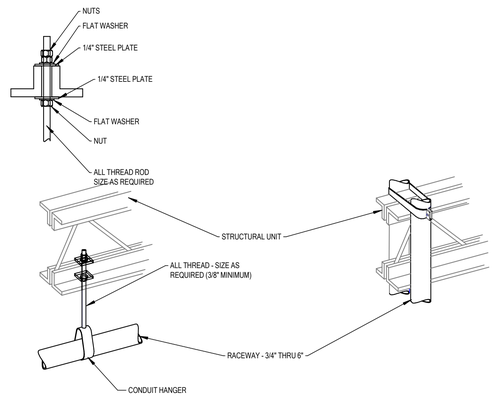

DIAGRAM H003 TYPICAL RACEWAY SUPPORT METHODS
NTS

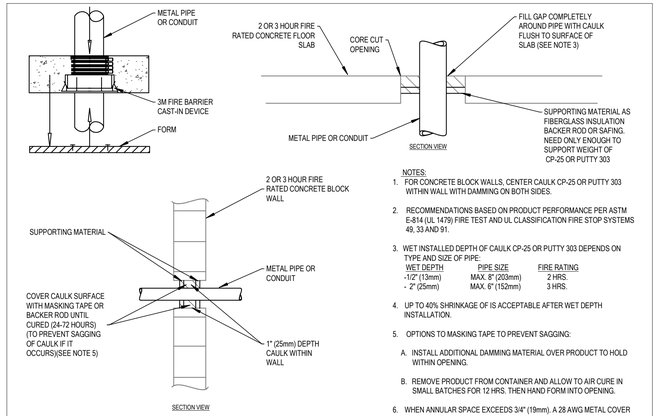

NOTES:

1. FOR CONCRETE BLOCK WALLS, CENTER CAULK CP-25 OR PUTTY 303 WITHIN WALL WITH DAMMING ON BOTH SIDES.
2. RECOMMENDATIONS BASED ON PRODUCT PERFORMANCE PER ASTM E-814 (UL 1479) FIRE TEST AND UL CLASSIFICATION FIRE STOP SYSTEMS 49, 33 AND 91.
3. WET INSTALLED DEPTH OF CAULK CP-25 OR PUTTY 303 DEPENDS ON TYPE AND SIZE OF PIPE:

WET DEPTH	PIPE SIZE	FIRE RATING
-1/2" (13mm)	MAX. 8" (203mm)	2 HRS.
- 2" (25mm)	MAX. 6" (152mm)	3 HRS.

4. UP TO 40% SHRINKAGE OF IS ACCEPTABLE AFTER WET DEPTH INSTALLATION.
5. OPTIONS TO MASKING TAPE TO PREVENT SAGGING:
   A. INSTALL ADDITIONAL DAMMING MATERIAL OVER PRODUCT TO HOLD WITHIN OPENING.
   B. REMOVE PRODUCT FROM CONTAINER AND ALLOW TO AIR CURE IN SMALL BATCHES FOR 12 HRS. THEN HAND FORM INTO OPENING.
6. WHEN ANNULAR SPACE EXCEEDS 3/4" (19mm) ,A 28 AWG METAL COVER PLATE MUST BE MECHANICALLY SECURED ATOP THE 3M FIRE BARRIER APPLICATION, OR TIGHTLY PACK A NON-COMBUSTIBLE DAMMING MATERIAL ATOP INSTALLED CAULK OR PUTTY.

DIAGRAM H012 FIRE STOP
NTS

1. #12 GA. WIRE HANGER AT EACH CORNER OF FIXTURE (TYP.) INDEPENDENT OF CEILING SUPPORT SYSTEM AND IDENTIFIED AS PER SPECIFICATIONS .
2. FIXTURE CLAMP. PROVIDE ONE PER SIDE PER FIXTURE .

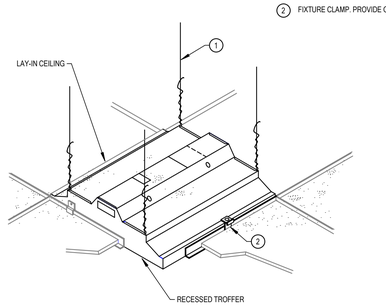

DIAGRAM A002 TYP. RECESSED FIXTURE MOUNTING
NTS

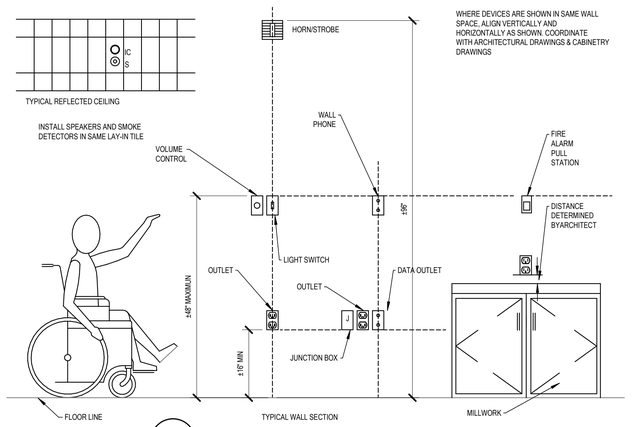

DIAGRAM R001 DEVICE MOUNTING HEIGHTS
NTS

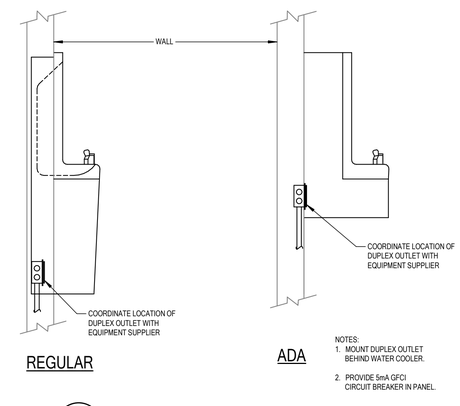

NOTES:
1. MOUNT DUPLEX OUTLET BEHIND WATER COOLER.
2. PROVIDE 5mA GFCI CIRCUIT BREAKER IN PANEL.

DIAGRAM R002 ELECTRIC WATER COOLER (EWC)
NTS

DEKOLD ARCHITECTURE INC.
104 E 600 S #540, Heber City, UT 84032
(208) 206-7338
www.behance.net/kevindekold
kevindekold@hotmail.com

Civil — CACHE LANDMARK — 95 W Golf Course Rd St. 101, Logan, UT 84321 — (435)713-0099
Landscape — LDG — 328 W 200 S #102, Salt Lake City, UT 84101 — (435)901-3127
Structural — REAVELEY — 675 E 500 S St. 400, Salt Lake City, UT 84102 — (801)505-4026
Mechanical — ROYAL — 1837 S E Bay Blvd Provo, UT 84606 — (801)375-2228
Electrical — BNA CONSULTING — 4225 W Lake Park Blvd St. 275 West Valley City, UT 84121 — (435)260-3570

03/19/2025

WEST VALLEY CITY AIS RESIDENTIAL FA
1739 WEST LAKE PARK DR
WEST VALLEY CITY, UT 84119

REVISIONS:
1
2
3

SHEET NUMBER:
E4.01
03/19/2025

BNA CONSULTING
4225 Lake Park Blvd, Suite 275
West Valley City, UT 84120
P: 801.332.2196
F: 801.332.2305
www.bnaconsulting.com

Smart Mechanical

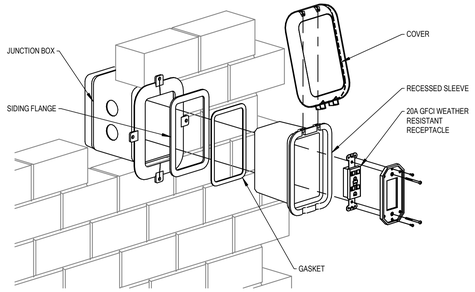

DIAGRAM L009 RECESSED IN-USE RECEPTACLE & COVER
NTS

NOTES:

1. SEE SPECIFICATION FOR ALL INSTALLATION REQUIREMENTS.
2. INSTALL DETECTABLE MARKING TAPE FOR ALL UNDERGROUND WIRING. SEE SPECIFICATION FOR MORE INFORMATION.

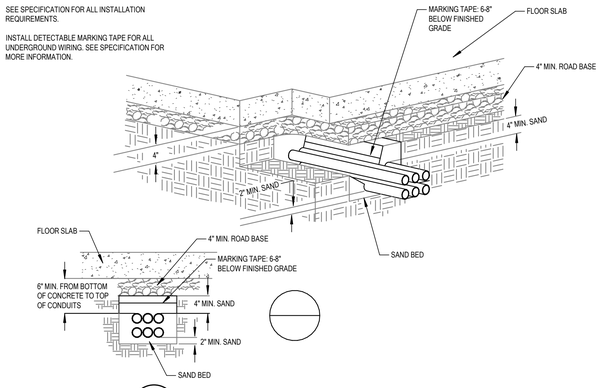

DIAGRAM U007 CONDUIT BELOW SLAB
NTS

NOTE:

1. PROVIDE ADDRESSABLE INITIATION LOOP(S) AND POWER CIRCUIT FOR THE CARBON MONOXIDE DETECTORS.
2. PROVIDE CARBON MONOXIDE DETECTOR WITH ASSOCIATED MONITOR MODULE. SEE PLANS FOR QUANTITY AND LOCATION.
3. PROVIDE CONTROL MODULE WITH FAN SHUTDOWN RELAY TO SHUTDOWN MECHANICAL UNIT ON LOCAL CARBON MONOXIDE DETECTOR ACTIVATION.
4. PROVIDE FIRE ALARM BLUE STROBE(S). SEE PLANS FOR QUANTITY AND LOCATIONS.
5. PROVIDE DUCT SMOKE DETECTORS AND FAN RELAYS AT ALL FAN UNITS 2000 CFM AND OVER. SHUT DOWN ALL SUPPLY AND RETURN FANS UPON A GENERAL ALARM SIGNAL.
6. PROVIDE KEY OVERRIDE SWITCH FOR EVERY PAIR OF ELECTROMAGNETIC DOOR HOLDERS/RELEASES.
7. PROVIDE KEY OVERRIDE SWITCH IN MAIN ADMINISTRATION OFFICE THAT WILL RELEASE ALL ELECTROMAGNETIC DOOR HOLDER/RELEASES THROUGHOUT THE BUILDING.
8. COORDINATE WITH THE ACCESS CONTROL PROVIDER TO PROVIDE INPUT POINT THAT WILL ALLOW THE ACCESS CONTROL SYSTEM TO RELEASE ALL ELECTROMAGNETIC DOOR HOLDER/RELEASES THROUGHOUT THE BUILDING DURING A LOCK DOWN EVENT OR PER THE OWNERS REQUIREMENTS.
9. COORDINATE WITH THE INTERCOM PROVIDER TO PROVIDE INPUT POINT THAT WILL ALLOW THE INTERCOM SYSTEM TO RELEASE ALL ELECTROMAGNETIC DOOR HOLDER/RELEASES THROUGHOUT THE BUILDING DURING A LOCK DOWN EVENT OR PER THE OWNERS REQUIREMENTS.

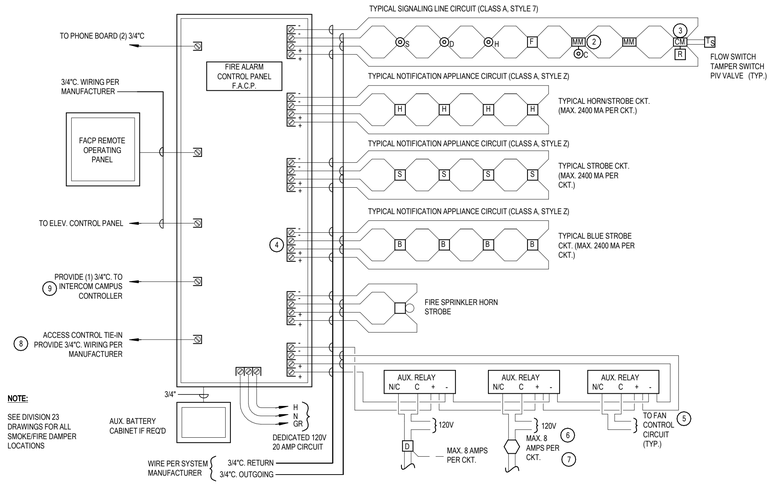

DIAGRAM D002 TYPICAL FIRE ALARM RISER
NTS

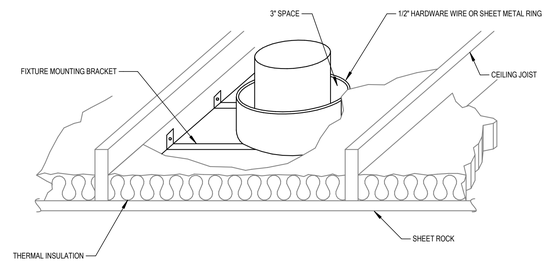

NOTE:
1. THIS REQUIREMENT IS FOR ALL DOWN LIGHT FIXTURES THAT ARE NOT "IC" RATED
2. INSTALLATION SHALL COMPLY WITH NEC 410-66

DIAGRAM A013 RECESSED DOWN LIGHT
NTS

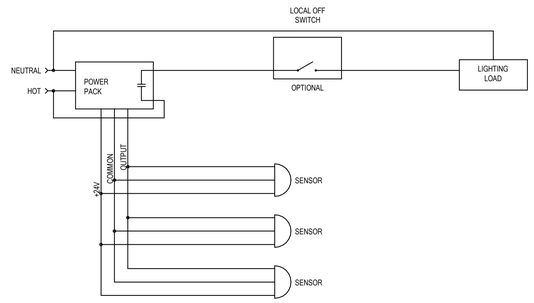

DIAGRAM S009 MULTIPLE SENSORS CONTROLLING ONE POWER PACK
NTS

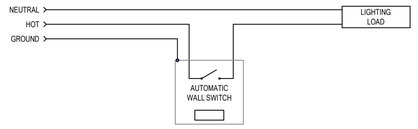

DIAGRAM S006 WALL SWITCH SENSOR
NTS

Civil
CACHE LANDMARK
95 W Golf Course Rd St. 101
Logan, UT 84321
(435)713-0699

Landscape
LDG
328 W 200 S #102
Salt Lake City, UT 84101
(435)901-3127

Structural
REAVELEY
675 E 500 S St. 400
Salt Lake City, UT 84102
(801)509-4026

Mechanical
ROYAL
1837 S E Bay Blvd
Provo, UT 84606
(801)375-2228

Electrical
BNA CONSULTING
4225 W Lake Park Blvd St. 275
West Valley City, UT 84121
(435)628-3670

DEKOLD ARCHITECTURE INC.
104 E 600 S #540, Heber City, UT 84032
(208) 206-7338
www.behance.net/kevindekold
kevindekold@hotmail.com

03/19/2025

WEST VALLEY CITY AIS
RESIDENTIAL FA
1739 WEST LAKE PARK DR
WEST VALLEY CITY, UT 84119

REVISIONS:
1
2
3

SHEET NUMBER:
E4.02
03/19/2025

BNA CONSULTING
4225 Lake Park Blvd, Suite 275
West Valley City, UT 84120
P: 801.532.2196
F: 801.532.2505
www.bnaconsulting.com

Scale: As indicated

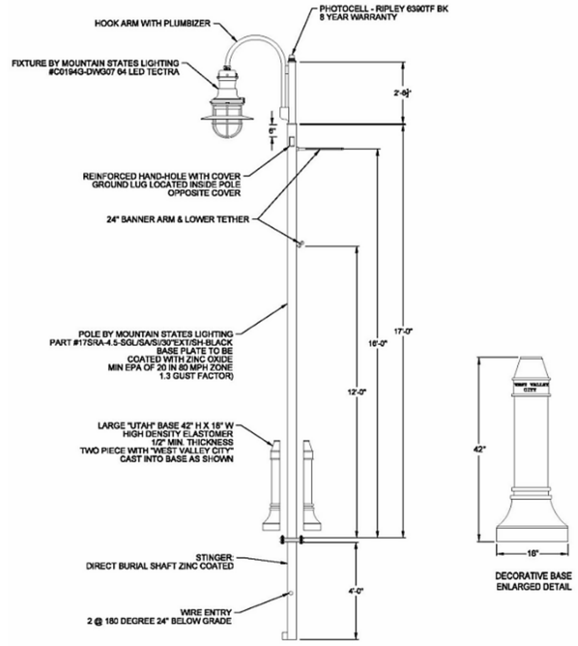

Figure 4. Streetscape Lighting A, Standard Drawing LP-06

DIAGRAM 1 STREETSCAPE LIGHTING A POLE LIGHT
NTS

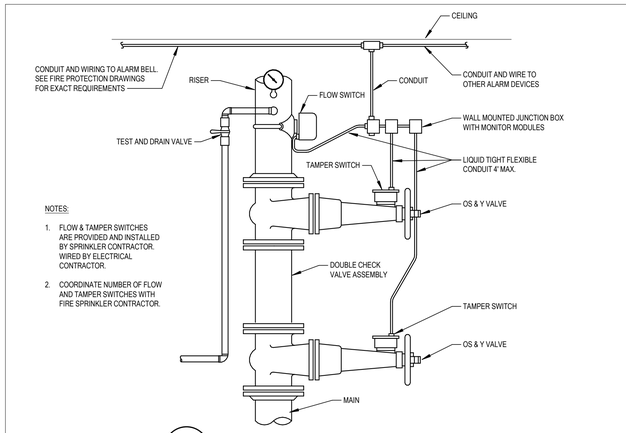

DIAGRAM D001 FIRE SPRINKLER RISER CONNECTION
NTS

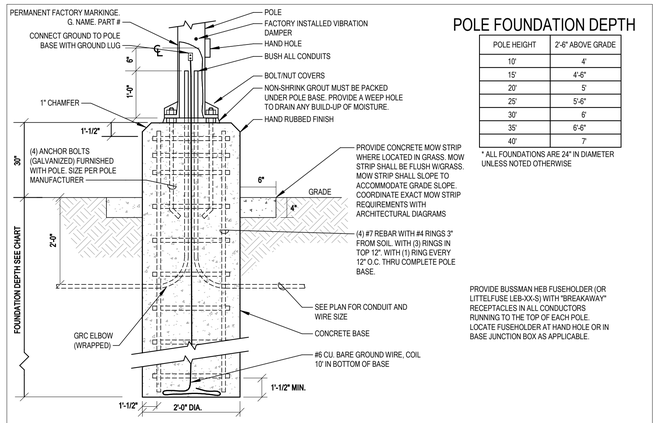

POLE FOUNDATION DEPTH

POLE HEIGHT	2'-6" ABOVE GRADE
10'	4'
15'	4'-6"
20'	5'
25'	5'-6"
30'	6'
35'	6'-6"
40'	7'

* ALL FOUNDATIONS ARE 24" IN DIAMETER UNLESS NOTED OTHERWISE

PROVIDE BUSSMAN HEB FUSEHOLDER (OR LITTELFUSE LEB-XX-S) WITH "BREAKAWAY" RECEPTACLES IN ALL CONDUCTORS RUNNING TO THE TOP OF EACH POLE. LOCATE FUSEHOLDER AT HAND HOLE OR IN BASE JUNCTION BOX AS APPLICABLE.

DIAGRAM C003 POLE LIGHT BASE DIAGRAM
NTS

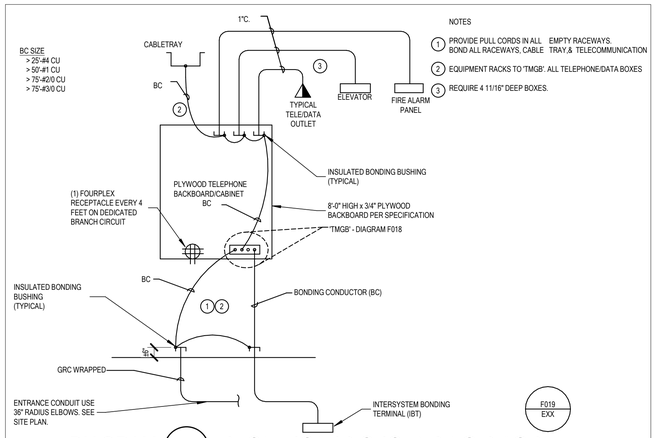

DIAGRAM F001 PHONEBOARD GROUNDING DIAGRAM
NTS

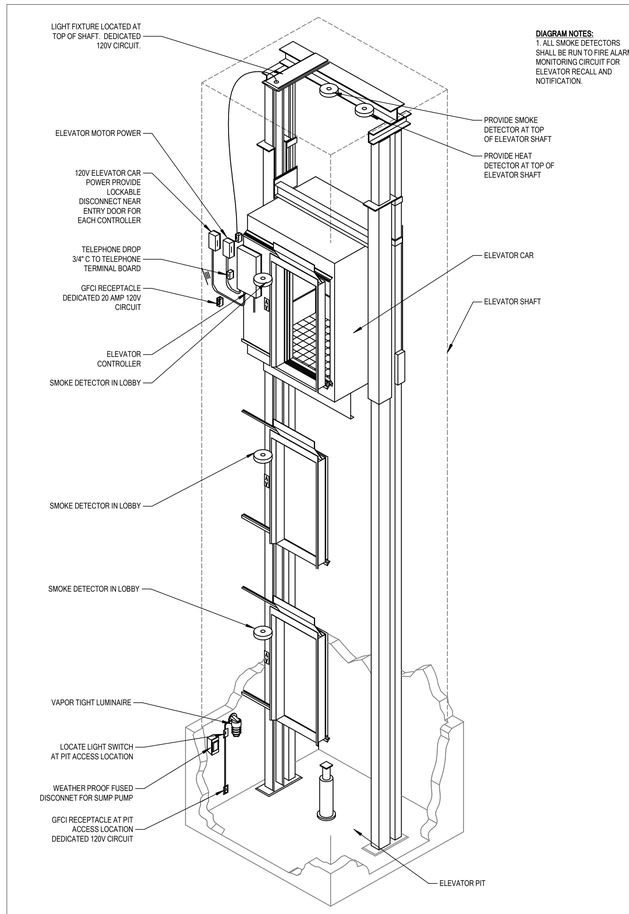

DIAGRAM D014 MACHINE ROOM LESS ELEVATOR
NTS

BNA CONSULTING
4225 Lake Park Blvd, Suite 275
West Valley City, UT 84120
P: 801.532.2196
F: 801.532.2505
www.bnaconsulting.com

DEKOLD ARCHITECTURE INC.
104 E 600 S #540, Heber City, UT 84032
(208) 206-7338
www.behance.net/kevindekold
kevindekold@hotmail.com

03/19/2025

Civil
CACHE LANDMARK
95 W Golf Course Rd St. 101
Logan, UT 84321
(435)713-0099

Landscape
LDG
328 W 200 S #102
Salt Lake City, UT 84101
(435)901-3127

Structural
REAVELEY
675 E 500 S St. 400
Salt Lake City, UT 84102
(801)505-4026

Mechanical
ROYAL
1837 S E Bay Blvd
Provo, UT 84606
(801)375-2228

Electrical
BNA CONSULTING
4225 W Lake Park Blvd St. 275
West Valley City, UT 84121
(435)828-3670

WEST VALLEY CITY AIS RESIDENTIAL FA
1739 WEST LAKE PARK DR
WEST VALLEY CITY, UT 84119

REVISIONS:
1
2
3

SHEET NUMBER:
E4.03
03/19/2025

DIAGRAM F010 LOW VOLTAGE SYSTEM RISER
NTS

BNA CONSULTING
4225 Lake Park Blvd, Suite 275
West Valley City, UT 84120
P: 801.532.2196
F: 801.532.2505
www.bnaconsulting.com

DEKOLD ARCHITECTURE INC.
104 E 600 S #540, Heber City, UT 84032
(208) 206-7338
www.behance.net/kevindekold
kevindekold@hotmail.com

03/19/2025

Mechanical
ROYAL
1837 S E Bay Blvd
Provo, UT 84606
(801)375-2228

Structural
REAVELEY
675 E 500 S St. 400
Salt Lake City, UT 84102
(801)505-4026

Landscape
LDG
328 W 200 S #102
Salt Lake City, UT 84101
(435)901-3127

Civil
CACHE LANDMARK
95 W Golf Course Rd St. 101
Logan, UT 84321
(435)713-0099

Electrical
BNA CONSULTING
4225 W Lake Park Blvd St. 275
West Valley City, UT 84121
(435)828-3670

WEST VALLEY CITY AIS RESIDENTIAL FA

1739 WEST LAKE PARK DR
WEST VALLEY CITY, UT 84119

REVISIONS:

1
2
3

SHEET NUMBER:

E4.04

03/19/2025