PROJECT MANUAL

AIS West Valley Expansion Independent Living Building

West Valley, Utah

Owner: Ability Inclusion Services

Architect: DeKold Architecture Inc.

Other Designers of Record as listed on Drawing Index Sheet

ISSUE TYPE: **100% Bid Set**

ISSUE DATE: **March 19, 2025**

SECTION 000110 - TABLE OF CONTENTS

DIVISION 00 - PROCUREMENT AND CONTRACTING REQUIREMENTS
000510 - Project Manual User Guide
003000 - Available Information
006000 - Project Forms
006211 - Submittal Form

DIVISION 01 GENERAL REQUIREMENTS
011100 - Summary of Work
012500 - Substitution Procedures
013300 - Submittal Procedures
014000 - Quality Requirements
014533 - Code-Required Special Inspections and Procedures
016000 - Product Requirements
017300 - Execution

DIVISION 02 - EXISTING CONDITIONS
024119 - Selective Demolition

DIVISION 03 - CONCRETE
031000 - Concrete Forming and Accessories
032000 - Concrete Reinforcing
033000 - Cast-In-Place Concrete
033546 - Concrete Topical Treatments

DIVISION 04 - MASONRY
040515 - Masonry Mortaring and Grouting
047300 - Manufactured Stone Masonry

DIVISION 05 - METALS
050560 - Welding
055000 - Metal Fabrications

DIVISION 06 - WOOD AND PLASTIC
060573.13 - Fire-Retardant Wood Treatment
060573.33 - Preservative Wood Treatment
061000 - Rough Carpentry
061636 - Wood Sheathing
061755 - Metal Plate Connected Wood Trusses
062000 - Finish Carpentry
064023 - Interior Architectural Woodwork

DIVISION 07 - THERMAL AND MOISTURE PROTECTION
072113.13 - Foam Board Insulation
072116 - Batt and Blanket Insulation
072126 - Blown Insulation
072500 - Weather Barriers
072616 - Below-Slab Vapor Retarders
074213 - Metal Wall Panels
074646 - Fiber-Cement Siding
075423 - Thermoplastic Polyolefin (TPO) Roofing
076200 - Sheet Metal Flashing and Trim
078400 - Firestopping

079200 - Joint Sealants
079219 - Acoustical Joint Sealants

DIVISION 08 - DOORS AND WINDOWS
081113 - Steel Doors and Frames
081416 - Flush Wood Doors
084113 - Aluminum-Framed Entrances and Storefronts
085313 - Vinyl Windows
087100 - Door Hardware
088000 - Glazing
088300 - Mirror Glass

DIVISION 09 - FINISHES
092226 - Gypsum Ceiling Suspension Systems
092800 - Backing Boards and Underlayments
092900 - Gypsum Board
093013 - Tiling
095113 - Lay-In Acoustical Panel Ceilings
095300 - Acoustical Ceiling Suspension Systems
096513 - Resilient Base and Accessories
096514 - Resilient Stair Accessories
096519 - Resilient Tile Flooring
099000 - Painting and Coating

DIVISION 10 - SPECIALTIES
101423 - Panel Signage
102613 - Corner Guards
102813 - Toilet Accessories
104413 - Fire Protection Cabinets
104416 - Fire Extinguishers
105500 - Postal Specialties

DIVISION 14 - CONVEYING EQUIPMENT
142400 - Hydraulic Elevators

DIVISION 21 - FIRE SUPPRESSION
Deferred Submittal

DIVISION 22 - PLUMBING
220500 - General Provisions
220501 - Summary of Work for Plumbing
220594 - Testing
220716 - General Piping Requirements
220718 - Piping Specialties
220719 - Pipe Insulation for Plumbing
221116 - Domestic Water System
221313 - Sanitary Waste and Vent System
223430 - Plumbing Equipment
224200 - Plumbing Fixtures

DIVISION 23 - HEATING, VENTILATING AND AIR-CONDITIONING (HVAC)
230501 - General Provisions
230593 - Air System Balancing (Common Areas)
230594 - Testing

230933 - Automatic Temperature Controls
231000 - Fuel Gas System (Natural Gas)
232300 - Refrigerant Piping
233114 - Sheet Metal Ductwork (Low Pressure)
233300 - Duct Specialties
235417 - Air Conditioning Equipment

DIVISION 26 - ELECTRICAL
260500 - Electrical General Provisions
260502 - Electrical Submittals and Spare Parts
260507 - Electrical Connections for Equipment
260519 - Conductors and Cables (600V and Below)
260526 - Grounding
260529 - Supporting Devices
260532 - Conduit Raceway
260533 - Electrical Boxes and Fittings
260553 - Electrical Identification
260573 - Protective Device Study
260923 - Occupancy Sensors
262416 - Panelboards
262713 - Service Entrance
262726 - Wiring Devices
262815 - Overcurrent Protective Devices
262816 - Motor and Circuit Disconnects
262913 - Motor Starters
265100 - Interior and Exterior Building Lighting

DIVISION 27 - COMMUNICATIONS
271500 - Telephone/Data Systems

DIVISION 28 - ELECTRONIC SAFETY AND SECURITY
281601 - Security Systems (Raceways)
283111 - Fire Alarm and Detection System

DIVISION 31 - EARTHWORK
311000 - Site Clearing
312200 - Site Excavation and Rough Grading
312300 - Earthwork
313116 - Termite Control

DIVISION 32 - EXTERIOR IMPROVEMENTS
321216 - Asphalt Paving
321313 - Concrete Paving
321373 - Concrete Paving Joint Sealants
Landscape - See Drawings

DIVISION 33 - UTILITIES
331100 - Potable Water Systems
331119 - Fire Suppression Water System
333100 - Sanitary Sewage Systems
334100 - Storm Drainage

APPENDICES
Appendix A - Geotechnical Data

Appendix B - Tax Exempt Certificate
Appendix C - UL Assemblies

END OF DOCUMENT

DOCUMENT 000510 - PROJECT MANUAL USER GUIDE

1.1 GENERAL

A. Purpose: This User Guide is a general document for information only and is included to establish a common basis for understanding the organization and interpretation of this Project Manual. It is based on industry standards published by The Construction Specifications Institute (CSI).

B. A thorough review of this User Guide is essential and mandatory for preparing and submitting bids, for performing work, and for reviewing completed work.

1.2 CONTRACT DOCUMENTS

A. Contract Documents describe the proposed construction which is referred to as "the Work."

B. Contract Documents for construction of this Project consist of the Drawings, Specifications, Agreement, Conditions of the Contract (General Conditions, and Supplementary Conditions if used), Addenda, and Modifications.

C. Contract Documents are complementary, and what is required by one is binding as if required by all. If uncertainties, contradictions, or omissions are discovered, report promptly to Architect using specified RFI form.

D. These documents contain legally enforceable requirements which become part of the Contract when the Agreement is signed.

E. Drawings show the relationship of the materials to each other, including sizes, shapes, locations, and connections.

F. Procurement Requirements, if any, instruct the bidders or proposers about the established procedures for preparing and submitting their bids or proposals, and are not part of the Contract Documents unless they are transferred by means of the Agreement.

G. Bidders may conduct additional investigations to verify the thoroughness of information made available to bidders.

H. Contracting Requirements include Agreement, Bonds, Certificates, Conditions of the Contract, and Administrative Forms.

I. Conditions of the Contract define the basic rights, responsibilities, and relationships of the parties involved in the construction process.

J. Divisions are based on the first two digits of Specification Section numbers.

K. Individual Specification Sections (Divisions 01+) define the qualitative requirements for systems, products, materials, and workmanship upon which the contract is based.

L. Section Titles: Based on CSI MasterFormat for the sake of conformance to industry standards. Technical content of Sections rather than Section titles shall determine the content of Sections.

M. Appendices may be included in the Project Manual as supplementary information to assist bidders in conducting additional investigations, verifying the thoroughness of information made available to bidders, and in preparing bids. This information does not relieve bidders from making their own investigations to determine the accuracy of the information.

N. Certain supplementary documents not provided in CSI 3-Part SectionFormat such as lengthy reports, equipment lists, and catalog cuts may also be placed in Appendices.

O. If some Available Information is not required by every trade, it will be indicated as available separately to those who request a copy.

1.3 RESPONSIBLE PARTIES

A. The Contract Documents form a contractual relationship between the Owner and the Contractor.

B. The role of the Architect is defined by the General Conditions. As referenced in the Specifications, the generic term Architect represents all design professionals designated by the Owner to carry out specialized responsibilities. Similar provisions apply to the Geotechnical Engineer, Testing Agency, and other prime consultants of the Owner.

1.4 FORMAT OF CONTRACT DOCUMENTS

A. Specifications: Based on recommendations of Construction Specifications Institute (CSI) MasterFormat, SectionFormat, and Practice Guides.
   1. MasterFormat is organized by "work results" and does not alone control how the Work is divided.
   2. Division 00-01 are applicable to all work indicated. For items specified on Drawings, make submittals, install products, and conform to other Division 01 topics as applicable to each part of the Work. Division 01 expands on certain of the broad provisions of the Conditions of the Contract, and governs the execution of all other Sections of the Specifications. It is important that all subcontractors and suppliers have access to and comply with Division 00-01.
   3. Imperative language is directed to the Contractor. Specification requirements and installation of each item shall be performed by Contractor or their subcontractors unless specifically stated otherwise.
   4. Streamlined Form: The words "shall be" are included by inference where a colon (:) is used within sentences or phrases.
   5. Cross References: Intended as an aid to the Contractor and others in navigating the Documents. Not an exhaustive list of possible related requirements. See also Specifications Table of Contents and Drawing Index.
   6. Specifications may include any combination of descriptive, proprietary, performance, and reference standard specifying methods.

B. Drawings: See abbreviations indicated on Drawings, and terms used in Specifications. See U.S. National CAD Standard for additional abbreviations.

1.5 SECTIONS

A. Sections consist of three Parts, even if indicated as "Not Used" or "Not Applicable". Documents which have more than or less than three Parts may be relocated to an Appendix.

B. The organization of Specifications by Sections is not intended to define subcontracts or other divisions of work by trades.

C. Terminology: The terms used on the Drawings to identify products may refer directly to the Section title or to generic terminology of products in the Section.

D. Quantities: Each Section title represents a class of products and work results, and may be stated in the singular or plural without regard to the actual quantity used on the project. All such items are included, even if the word "all" is not used.

E. Attachments: Certain supplementary documents of limited length not provided in CSI 3-Part format may be placed following the End of Section designation as an Attachment.

F. Attachments become enforceable as part of the Section by reference to the attachment from within the Section.

1.6 OBJECTIONS TO SPECIFIED PRODUCTS

A. Submit Bids for only those products and systems specified by Project Manual, shown on Drawings, or accepted by Addendum.

B. Where there are reasonable objections to specified products or systems and valid reason for proposing substitution, conform to provisions of Section 012500.

C. Substitutions to specified products, not accepted by Architect, constitute non-conforming work and may require removal, repair, replacement, or monetary reimbursement in conformance to provisions of the Conditions of the Contract.

1.7 SUBMITTAL REVIEW

A. Refer to Section 013300 - Submittal Procedures regarding the intent of Architect's review of submittals.

B. Architect's review of submittals is limited to review for conformance with the design concept as indicated by the Contract Documents.

1.8 SAFETY

A. Contractor has full autonomy regarding safety of persons and property in accordance with the Conditions of the Contract. Architect is not responsible for jobsite safety.

B. Do not submit Safety Data Sheets (SDS or MSDS) to Architect. Post on-site. Provide bulletin board for hazard communication program, in location accessible 24 hours a day and convenient to employees, subcontractors and their employees, and representatives for Owner, Architect, and other agencies that may visit project site and come in contact with hazardous chemical substances.

1.9 TYPEFACES

A. Underline and strikethrough may be used to indicate Addenda additions and deletions respectively from a previous Bid Set issue of the Specifications. The use of these typefaces may necessitate changes to the proposed Contract Sum and the Contract Time.

1.10 DATES

A. Dates indicated in the header on each page of the Project Manual are for the Architect's own internal reference and have no other significance to the Contract. They may or may not relate to issue date of the Contract Documents or date of the Contract. Refer to the cover page, transmittals, and other documents accompanying construction documentation to establish effective dates for legal purposes.

END OF SECTION

THIS PAGE INTENTIONALLY LEFT BLANK

DOCUMENT 003000 - AVAILABLE INFORMATION

PART 1 - GENERAL

1.1 AVAILABLE INFORMATION

A. See Appendix A - Geotechnical Data
   1. Geotechnical Report: *"Proposed AIS Residential Facility , 1739 West Lake Park Drive, West Valley Utah"* by AGEC, dated 11/25/2024.

1.2 USE OF DATA

A. Review this material prior to submitting Bid.

B. These documents are for Contractor information, are not Contract Documents, and do not override provisions of Contract Documents. Portions of these documents may not be applicable to Contract Documents.
   1. These reports were obtained for use in study and design, and is intended as general reference to probable conditions. The reports are made available for information only and is neither a part of the Contract Documents nor a warranty of subsurface conditions.
   2. Bidder shall visit the site and become acquainted with existing conditions. Prior to bidding, Bidder must make its own subsurface investigations if needed to satisfy itself as to site and subsurface conditions, subject to the following stipulations:
      a. Such investigations shall be performed only under time schedules and arrangements approved in advance by the Owner in writing.
      b. The sites of such investigations shall be restored to the respective conditions that existed before such investigations were undertaken.
      c. Bidder shall indemnify and hold harmless the Owner and Architect from and against claims, damages, losses, and expenses attributable to bodily injury or death and to injury to or destruction of tangible property arising out of or resulting from such investigations.
   3. Bidder shall assume full responsibility for interpreting the information furnished in the reports, for the conclusions drawn from the information furnished, and from its inspection of the site.
   4. Note existing information on soils and other Owner furnished information regarding impact on work of this Project, including suitability of soil types for excavation and fill, and known or partially known subsurface conditions.

PART 2 - PRODUCTS (Not Used)

PART 3 - EXECUTION (Not Used)

END OF DOCUMENT

THIS PAGE INTENTIONALLY LEFT BLANK

DOCUMENT 006000 - PROJECT FORMS

PART 1 - GENERAL

1.2 REFERENCES

A. American Institute of Architects (AIA)
   1. Forms may be ordered from https://www.aiacontracts.org.

1.3 AGREEMENT FORM AND CONDITIONS OF THE CONTRACT

A. The successful Bidder shall enter into the following Contract with the Owner:
   1. Agreement Form: AIA Document A105-2017 - Standard Short Form of Agreement Between Owner and Contractor for a Project of Limited Scope.
   2. General Conditions: AIA Document A201-2017 - General Conditions of the Contract for Construction.

B. These Contracts may be modified as mutually agreed upon in writing by the Owner and Contractor.

C. The Contractor shall guarantee all materials and labor for a minimum of one year from the time of the final payment, or as mutually agreed upon by the Owner and Contractor.

D. At the Owner's discretion the Contractor shall provide bonds and proof of insurance in the amounts to be agreed upon by the Owner and the Contractor.

E. The Contract shall provide 5 percent retainage, or as mutually agreed upon by the Owner and Contractor.

F. The Contractor and Subcontractors shall hold harmless the Architect, his Agents and the Owner against loss, damage, liability or any expense arising in any manner from the wrongful and negligent acts of the Contractor, Subcontractors or their respective Employees and Agents.

G. Agreement Form: AIA Document A132 - Standard Form of Agreement between Owner and Contractor, Construction Manager as Adviser Edition.

H. General Conditions: AIA Document A232 - General Conditions of the Contract for Construction, Construction Manager as Adviser Edition.

I. Other AIA Documents: As applicable, and from AIA Document Family matching the type of contract used.

1.4 ADMINISTRATIVE FORMS

A. Forms shall be as specified below, or other forms approved by Architect.

B. Contractor Forms:
   1. Certificate of Insurance: AIA Document G715 - Supplemental Attachment for ACORD Certificate of Insurance 25-S.
   2. Schedule of Values: AIA Document G703 - Continuation Sheet.
   3. Submittal Form: Document 006211.
   4. Substitution Request Form: CSI Form 1.5C or form attached to Section 012500.
   5. Request for Interpretation (RFI): AIA Document G716 - Request for Information (RFI).
      a. Also known as Request for Information. Request from Contractor directed to Architect for clarification, interpretation, or direction regarding the Work as described by Contract Documents.
   6. Request for Proposal: AIA Document G709 - Work Changes Proposal Request.
   7. Payment Application: AIA Document G702/703 - Application and Certificate for Payment and Continuation Sheet.
   8. Affidavit of Payment: AIA Document G706 - Contractor's Affidavit of Payment of Debts and Claims.
   9. Lien Release: AIA Document G706A - Contractor's Affidavit of Payment of Release of Liens.
   10. Consent of Surety: AIA Document G707 - Consent of Surety to Final Payment.

C. Architect's Forms of Change:
   1. Minor Change in the Work: Architect's standard form, or AIA Document G710 - Architect's Supplemental Instructions.

   a. Minor changes to the Work, involving no change in Contract Time or Contract Sum, ordered and signed by Architect and directed to Contractor.
2. Change Directive: Architect's standard form, or AIA Document G714 - Construction Change Directive.
   a. Applicable where a Change Order is not practical or immediately achievable.
   b. Does not require acceptance for revisions to Contract Sum or Contract Time by Contactor, until Change Order agreement between Owner and Contractor.
3. Change Order: Architect's standard form, or AIA Document G701 - Change Order.

PART 2 - PRODUCTS (Not Used)

PART 3 - EXECUTION (Not Used)

END OF DOCUMENT

DOCUMENT 006211 – SUBMITTAL FORM

Use this Submittal Form to detail and document items that are in compliance with all requirements of Contract Documents.

DO NOT send substitutions in the form of a submittal. Instead, use Substitution Request Form attached to Section 012500.

Spec Section# & Title:_____ _____

GC or CM Submittal#: ☐ Informational Submittal Only* ☐ Resubmission

A. FROM SUBCONTRACTOR: (Company name and address) Signed: _____

To Contractor: Insert Contractor firm and address when awarded Date Trnsmt'd by Subcontractor: _____

Submittal Items **C. Designer Review**** → ☐**Struct** ☐**FP** ☐**Mech** ☐**Elec** ☐**Plmb** ☐**Civil** ☐**LA/oth** ☐**Arch**

List items that are specified in a SINGLE spec section noted above

Item	**Type**	**Description, Mfr, Drawing Reference, etc.**	Date Initls	Date Initls	Date Initls	Date Initls	Date Initls	Date Initls	Date Initls	**Final Code**
1.										
2.										
3.										
4.										
5.										
6.										
7.										
8.										
9.										
10.										

Attach additional sheets if needed.

B. FROM CONTRACTOR: Insert Contractor firm when awarded Signed: _____

To A/E: Insert firm name and address Date Rec'd by Contractor:_____ Date Trnsmt by Contractor: _____

Remarks: _____

C. FROM A/E: Insert firm name Signed:_____

To Contractor: Insert Contractor firm when awarded Date Rec'd by A/E: _____ Date Trnsmt by A/E: _____

Remarks: _____ (Designers of Record for affected disciplines, mark codes** in table above)

D. FROM CONTRACTOR: Insert Contractor firm when awarded Signed: _____

To Subcontractor: _____ Date Rec'd by Contractor: _____ Date Trnsmt by Contractor: _____

Remarks: _____

A fillable version of this document is available upon request. Submit electronically via approved project management system.

Submit all items in accordance with Section 013300 - Submittal Procedures and the individual specification sections. Do not submit MSDS.

*Use separate submittal forms for informational submittals and action submittals – DO NOT COMBINE. However, to the greatest extent possible, submit all items of a specification section at the same time, per requirements for concurrent submittals under "Coordination" in 013300.

Review codes: **R: Reviewed **RN: Reviewed as noted** **RSN: Resubmit as noted** **REJ: Rejected** **X: Submittal not required**

END OF DOCUMENT

THIS PAGE INTENTIONALLY LEFT BLANK

SECTION 011100 - SUMMARY OF WORK

PART 1 - GENERAL

1.1 SUMMARY OF WORK UNDER THIS CONTRACT

A. All-new construction of a two-story apartment building for Ability Inclusion Services, including sitework, other items indicated, and as necessary for complete installation.
   1. Comply with IBC with State and local amendments, if any, and other codes and regulations indicated on Drawings and as adopted and modified by state and local authorities having jurisdiction.

1.2 CONTRACT DESCRIPTION

A. Perform Work of this Contract under single prime contract where basis of payment is a stipulated lump sum in conformance to the Owner/Contractor Agreement. The term Contractor means the Construction Manager At Risk. The Contractor may self-perform work if in compliance with Installer Qualifications, and may subcontract portions of the Work to Installers.

B. AIA Documents and Forms: As applicable from AIA Document Family matching the type of contract used.

1.3 OWNER'S TAX EXEMPT STATUS

A. Owner is a government organization and is exempt from certain taxes such as federal excise tax and state sales and use tax. Obtain certificates of tax-exempt status from Owner and make available to agents who will make purchases for the project and to suppliers upon request. In the event that such taxes are paid, obtain rebates and reimburse the Owner in the full amount of such taxes by change order.

B. See certificate in Appendix B.

1.4 WASTE MANAGEMENT

A. Demolition waste and other construction waste becomes property of Contractor. Remove from site and lawfully dispose.

1.5 CONTRACTOR'S USE OF PREMISES

A. Contractor will have full use of site within limits of the Work indicated.

B. Coordinate with Owner for procedures to mitigate risk of infectious diseases according to current recommendations of CDC, state, local, and other authorities applicable to Project.

C. Limit use of construction site to Work of this Contract, including storage and facilities required for completion of Work.

D. Assume full responsibility for the protection and safekeeping of products under this Contract, stored on the site.

E. Obtain and pay for the use of additional storage or work areas needed for operations.

F. Store combustible, toxic, and other hazardous material outside of building or in area acceptable to Architect and Owner. Do not store combustible materials in mechanical and electrical equipment rooms.

G. Maintain Project in a neat and orderly manner.
   1. Avoid accumulation of unnecessary debris, equipment, and materials.
   2. Do not encumber site with materials or equipment that may interfere with access to site by Owner and personnel under Owner's direction.

H. Do not overload structures with weight-endangering loads.

I. Maintain access routes for emergency vehicles and personnel.

J. Maintain unencumbered pedestrian and vehicular use of streets, sidewalks, and paths around construction site.

K. Maintain streets and public ways free of debris, dust, spillage, and tracking resulting from construction activities. Establish maintenance program.

L. Protect areas designated as off limits to construction activities from impact. Maintain fencing and signage indicating areas to remain free from impact.

1.6 CONSTRUCTION ACCESS, PARKING, AND STAGING

A. Coordinate with Owner for on site access, travel routes, parking, and staging areas. Include barriers, directional signs, fencing, and security as needed to prevent unauthorized trespass into construction areas.

1.7 SITE ACCESS

A. Meet with the Owner prior to mobilization to coordinate access logistics and site security and mutually develop a site access plan.

1.8 ECOLOGICAL REQUIREMENTS

A. Conform to local codes and guidelines regarding pollution control, waste reduction, and recycling.

1.9 WORK RESTRICTIONS

A. Tobacco products are not permitted during Work of this Contract, except in specifically designated areas approved by the Owner prior to mobilization.

B. Employee Behavior: Loud music, harassing, and foul language are not permitted.

C. Restrictions on Contractor personnel apply equally to subcontractor and supplier employees.

1.10 EXISTING CONDITIONS

A. Comply with local underground facilities protection laws with current amendments. Call to request marking of underground utilities, with the required amount of notice, and do not proceed with work until the member utilities have responded. Make additional requests as required for areas greater than the maximum distance of a single request and for operations longer than the duration of a single request.

B. For any known or suspected types of underground facilities that the public service does not mark, use electronic line location, probing, or other methods to locate and mark facilities.

C. Protect the markings of underground facilities.

D. Where unknown utility lines are encountered, protect from damage and do not assume abandoned before identification is made through Owner or utility company. Notify Architect and the owner of underground facilities of unauthorized cutting or other damage to utility lines resulting from construction activity and promptly take such measures as directed to make reparation.

E. Surveys and reports of existing topographical and subsurface conditions, including locations of utilities, are provided without warranty as to their accuracy or completeness and are intended as general reference to probable conditions. Refer to Document 003000 for more information regarding the Survey of Existing Conditions.

F. Where existing conditions differ from that indicated by Contract Documents:
   1. Make corrected Record .
   2. Coordinate and distribute corrections prior to preparing Shop Drawings and before beginning work dependent upon accurate knowledge of conditions.

1.11 DISCREPANCIES IN CONTRACT DOCUMENTS

A. Bring conflicts, omissions, and other discrepancies in Contract Documents promptly to Architect's attention for interpretation and direction.

B. Where direction from Architect cannot be obtained prior to Bid Date, make provision for the more stringent and costly requirements before submitting Bid, and verify with Architect before beginning work.

1.12 ARCHEOLOGICAL AND CULTURAL FINDINGS

A. In the event of discovery of an item of archeological interest during Project, suspend Work at site of discovery and notify Owner, who will notify historic preservation officials. Suspension of work shall remain in effect until permission to proceed has been obtained. Owner will obtain the required permissions.

PART 2 - PRODUCTS (Not Used)

PART 3 - EXECUTION (Not Used)

END OF SECTION

THIS PAGE INTENTIONALLY LEFT BLANK

SECTION 012500 - SUBSTITUTION PROCEDURES

PART 1 - GENERAL

1.1 DEFINITIONS AND PRODUCT OPTIONS

A. Performance, Reference Standard, and Descriptive Specifications:
   1. For requirements that do not name manufacturers or products, but are instead specified only by descriptive requirements, design requirements, performance requirements, or reference standards: Products and options meeting or exceeding specified provisions are acceptable and do not constitute a substitution request. Comply with requirements for submittals.

B. Open Proprietary Specifications:
   1. Products by one or more manufacturers are specified and specification makes provision for substitution requests.
   2. Conform to provisions for making substitution request as specified by this Section.

C. Proprietary Specifications:
   1. Where specific products or manufacturers are specified: Use specified products, or conform to provisions for making substitution request as specified by this Section.

1.2 PROCEDURES

A. Proposed substitutions must be approved by the Architect in writing.

B. Substitutions made without such approval are subject to rejection.

1.3 TRANSMITTALS

A. Submit Substitution Requests through Construction Manager to Architect.
   1. Do not submit directly to Architect, except by Construction Manager.
   2. Direct substitution requests to Architect by subcontractors, manufacturers, suppliers, and others will not be reviewed.

B. Construction Manager will be notified by Architect in writing of decision to accept or reject Substitution Requests.

1.4 FORMAT

A. Submit Substitution Request with completed Substitution Request Form attached to this Section. Electronic version available upon request. Other formats will not be reviewed, except at Architect's discretion.

B. Submit only one substitution on each Substitution Request Form. Multiple substitution requests on a single form will not be reviewed.

1.5 CONTENT

A. Burden of proof is upon Substitution Request to include sufficient data to indicate conformance to or equivalency to specified requirements.

B. Substitution Requests with incomplete, inadequate, and insufficient detail for a thorough and timely evaluation will not be reviewed.

C. Submit drawings, product data, samples, certified test results, and as needed to fully describe Substitution Request for evaluation by Architect. Include limitations.

D. Where product data includes products other than that proposed, clearly mark, or otherwise indicate, exact substitution.

E. Substantiate that proposed substitution conforms to specified requirements, including design, performance, quality assurance, regulatory, and installation requirements.

1.6 CONSTRUCTION MANAGER REVIEW AND OBLIGATIONS

A. Submittal of Substitution Request constitutes representation that Construction Manager has investigated proposed substitution, determined that it meets or exceeds specified requirements, and agrees to:
   1. Provide same or better Warranty, performance, and characteristics for substitution as for specified item.
   2. Coordinate accepted substitution with related work and make changes as needed for completion of Work of this Contract.
   3. Waive claims for additional cost or time extension due to acceptance of Substitution Request.
   4. Reimburse Owner for additional review time and redesign services, resulting from acceptance of Substitution Request.

1.7 NON-CONFORMING SUBSTITUTIONS

A. Substitutions shown or implied on submittals, including shop drawings and product data, may be rejected and required to be resubmitted under provisions of Section 013300.

B. Substitutions that are not accepted by Architect and are installed into the Work constitute non-conforming work and may be considered defective by Owner.

PART 2 - PRODUCTS (Not Used)

PART 3 - EXECUTION (Not Used)

END OF SECTION

ATTACHMENTS

- Substitution Request Form

SUBSTITUTION REQUEST FORM

SUBMIT TO ATTN: AIS Residential Facility Construction Administrator
DeKold Architecture
104 E 600 S Num 540
Heber City, UT 84032

SPECIFIED ITEM

_____

Section No. *Paragraph No.* *Description of Specified Item*

PROPOSED SUBSTITUTION
Undersigned requests consideration for following substitution to that specified:

_____

ATTACHMENTS
Include product data, specifications, drawings, photographs, performance characteristics, test data, and other information as necessary for evaluation.

1. State limitations and in what manner proposed substitution differs from that specified.
2. Identify proposed substitution in data and drawings included with substitution request.
3. Include description of changes to related Work of this Contract required by proposed substitution.
4. State reason for substitution request, and effect on cost if any.

CERTIFICATION
Undersigned, as an authorized representative, certifies that following paragraphs are correct, except as modified by attachment:

1. Proposed substitution is equivalent or superior in function, appearance, and quality to that specified.
2. Proposed substitution conforms to specified provisions of Contract Documents.
3. Proposed substitution accommodates dimensions and clearances shown on Drawings, will not adversely affect work of other Sections, and will accommodate Progress Schedule.
4. Technical representation, maintenance materials, and servicing are locally available for proposed substitution.
5. Undersigned agrees to pay cost associated with acceptance of proposed substitution necessitating changes to design, details, and construction, including associated architectural, engineering, and consultant fees.

SUBMITTED BY
Signature_____
Firm_____
Address_____
_____
_____
Date_____
Tel ( )_____Fax ( )_____

Email_____

FOR USE BY ARCHITECT
□ Accepted □ Accepted as Noted
□ Not Accepted □ Received too Late
By_____
Date_____
Remarks_____
_____
_____
_____

END OF SUBSTITUTION REQUEST FORM

THIS PAGE INTENTIONALLY LEFT BLANK

SECTION 013300 - SUBMITTAL PROCEDURES

PART 1 - GENERAL

1.1 SUBMITTALS, GENERAL

A. Review submittals for accuracy and completeness prior to submission to the Architect.

B. Architect's review is compliance with design intent only. Contractor is solely responsible for field measurement, confirming dimensions, and final shop drawing approval.

1.2 SUBMITTAL FORMAT

A. Transmittal Form:
1. Accompany each submittal with Document 006211 - Submittal Form or approved electronic transmittal form.
2. Submit number to Architect as specified for each submittal. Provide triplicate documentation for material and color samples.
3. Do not address more than one topic or portion of the Work on each transmittal.

B. Submittal Numbering:
1. Number transmittal forms by specification Section Number and sequential number (Example: 079200-01).
2. Mark revised submittals with original number and sequential alphabetic suffix (Example: 079200-01-A).

C. Submittal Identification: Identify Project, Contractor, subcontractor, supplier, manufacturer, Drawing and detail number, and specification Section number, appropriate to submittal.

D. Contractor Certification: Apply Contractor stamp, signed or initialed, certifying that submittal has been reviewed for accepted products, field dimensions, interface with adjacent construction, and coordination as required to provide the Work in conformance to provisions of Contract Documents.

E. Review Stamp Space: Allow minimum 4 inch by 5 inch blank space for Architect's stamp. Allow additional review stamp space for Engineer and other consultant stamps on applicable submittals.

F. Electronic Format: Utilize internet based project management software suite as agreed at Pre-construction Meeting by Owner, Architect, and Contractor.
1. Software Based Logging System: Accessible by Owner, Architect, Contractor and Subcontractors.
2. Electronic Submittal Log and Submittal Transmittals: Maintain by and process by members of team.
3. Non-Electronic Hard Copy and Originals: Submit product data, shop drawings, material samples, color samples and other reference submittals not applicable for electronic submittal as specified by this Section.

1.3 SUBMITTAL PROCEDURES

A. Submit as required by each Section for Architect and consultant review and verification that information contained in submittals conforms to design concept and specific provisions expressed by Contract Documents.

B. Transmit submittals to Architect for review of design intent.
1. Do not transmit submittals directly to Architect's consultants. Architect will review and transmit submittals to consultants for their review.
2. Prior to submitting transmittals required by Building Code to building code officials and other authorities having jurisdiction, transmit submittals to Architect for review and approval.
3. Approval and direction by others including consultants and authorities having jurisdiction that conflict with Architect's design intent may require revision at no additional cost to Owner.

C. Submittals received from other than Contractor will be rejected.

D. Submittals not requested will be returned unprocessed.

E. Schedule submittals as required to expedite the Work for critical path and long lead items.

F. Sequence submittals in an orderly and manageable quantity for review of independent elements of the Work.

G. Submit work of each Section as a separate submittal package.

H. Coordinated Submittals: Consolidate submittals of complete systems and assemblies.
   1. Submit packages for interdependent Sections concurrently.
      a. Exceptions: Closeout Submittals and Maintenance Material Submittals.
   2. Partial or incomplete submittals will not be reviewed until complete submittal package is received.

I. Identify product and system limitations and conditions that may be detrimental to successful performance or completion of the Work.

J. Identify minor deviations from Contract Documents due to standard shop practice or industry standard. Draw cloud around or otherwise identify deviation and note change.

K. Substitutions and other major deviations are not acceptable as submittals. Refer to Section 012500 for substitution request requirements during construction phase.

L. Verify and coordinate dimensions on shop drawings conforming to actual field conditions. Do not request dimensions from Architect that can be calculated or field verified.

M. Distribute reviewed submittals and revised resubmittals as necessary to expedite and complete the Work. Coordinate so that current Architect reviewed, stamped, and accepted submittals are used in connection with the Work.

N. For submittals revised and returned by Architect, make revisions and identify change on resubmittal from previous submittal.

O. Maintain in project Field Office a copy of each submittal, regardless of status, along with a current Submittal Log, and Project Record Documents.

1.4 SUBMITTAL CATEGORIES

A. Unless otherwise specified, submittals are categorized as follows:
   1. Action Submittals: Product Data, Shop Drawings, Samples, Product Schedules, Delegated Design/Design Data.
      a. Architect's responsive action is required. Architect will stamp as follows:
         1) Reviewed with No Corrections: Indicates submittal is in conformance with the design intent indicated in the Contract Documents and there are no exceptions/corrections required.
         2) Reviewed with Corrections: Indicates submittal is in conformance with the design intent indicated in the Contract Documents but there are exceptions/corrections as noted.
         3) Revise and Resubmit: Indicates submittal is not in conformance with the design intent indicated in the Contract Documents and the submittal must be revised and resubmitted.
         4) Rejected: Indicates submittal is not in conformance with the design intent indicated in the Contract Documents and a different submittal is required.
   2. Informational Submittals: Test Reports, Inspection Reports, Certificates, Installation Instructions, Research Reports/Evaluation Reports, Field Test Reports.
      a. Architect's responsive action not required. Architect may return Informational Submittals that do not comply with intent of Contract Documents.
   3. Submittals that are not specified in Contract Documents do not require Architect's review, and may be discarded.
   4. Closeout Submittals: Operations and Maintenance Data, Instructions to Owner's Personnel.
   5. Maintenance Material Submittals: Extra Materials.

1.5 PROCESSING AND TURN-AROUND TIME

A. Allow minimum 14 calendar days from time of receipt by Architect for each submittal and for each resubmittal. Allow additional 7 calendar days for submittals requiring Architect's consultant's review.

B. Review time does not begin until Coordinated Submittals are received.

C. For complex or multiple submittals, assume longer turn-around time for Architect and consultant review.
   1. Sequence and package submittals to allow for sufficient review time.
   2. Submit priority list to Architect for review and return, allowing for resubmittal time.
   3. Notify Architect of submittals affected by critical path and long lead times.
   4. For critical submittals, request dates needed for return of reviewed submittals.

D. Where review time is inadequate, Architect will notify Contractor.

1.6 SCHEDULE OF SUBMITTALS

A. Prepare and submit Schedule of Submittals by time of second Application for Payment following Notice to Proceed.

B. Identify critical paths and long lead items shown by Progress Schedule. Update as requested by Architect.

C. List Submittals sequentially by Project Manual Table of Contents Section Numbers.

1.7 PROPOSED MANUFACTURERS, PRODUCTS, AND SUBCONTRACTORS LISTS

A. Immediately following award of Contract, submit to Owner for approval:
   1. List of manufacturers and products/materials to be used for the Work, including preliminary schedule.
   2. List of work items, and name of subcontracting firms to be used for the Work. For self-performed items by Contractor, list Contractor name and "self-performed".
   3. Resubmit with alternative manufacturers and subcontractors when directed by Owner.

1.8 SHOP DRAWINGS

A. Identification:
   1. Reference Shop Drawing details same as referenced on Contract Documents, including sheet and detail designations, schedules, and room numbers.
   2. Identify installer or supplier with contact information.
   3. Do not use expression "by others".

B. Hand draft or computer generate, and delineate to present information in a clear and thorough manner. Freehand drawings are not accepted.

C. Do not submit Contract Documents/Architect's Drawings as-is for shop drawings. Show Project-specific conditions and components not included in manufacturer's standard details.

D. Mechanical and Electrical Equipment: Include applicable electrical characteristics, connection requirements, rough-ins, switches and receptacle locations, wiring, piping diagrams, controls, weight, and installation requirements.

E. The Contract Drawings are diagrammatic and indicate the general arrangement of systems and work. Do not scale from the drawings. Where Contract Drawings are not dimensioned, use Shop Drawings to show how the Work will fit together, and where critical, verify with field measurements.

F. Due to the small scale of the drawings, it is not possible to indicate duct and piping offsets, rises, drops, fittings, and accessories, which may be required. Carefully investigate the conditions affecting the work, and arrange such work accordingly, providing such fittings and accessories as may be required to meet such conditions.

1.9 PRODUCT DATA

A. Submit original printed publications or clearly legible copies and prints. Illegibly printed faxes and other copied data will not be reviewed.

B. Mark each copy to identify applicable products, models, options, tolerances, dimensions, and other data.

C. Modify drawings and diagrams to delete inapplicable information. Submit supplemental data for information unique to Project.

D. Correct and modify submittals to illustrate revisions from published product data.

E. Mechanical and Electrical Equipment: Include applicable electrical characteristics, connection requirements, rough-ins, switches and receptacle locations, wiring, piping diagrams, controls, weight, and installation requirements.

1.10 SAMPLES

A. Submit 3 of each to Architect, unless otherwise specified.

B. Submit samples of sufficient size and completeness to clearly illustrate Product and as specified by each Section.

C. Label each sample with Project title, manufacturer, product, model number, description, and as applicable to sample identification. Label on back of sample where possible.

D. When required for selection of colors, finishes, patterns, and textures, and finishes to finalize selection process, furnish full range of manufacturer's custom and standard selections, except as otherwise specified.

E. Where selection is specified, submit to illustrate conformance to Contract Documents.

F. Sample Panels or Fabrication Samples: Samples described in Contract Documents which require multiple materials, such as stepped samples on a substrate, or other portable samples of part of an assembly. Submit as with other Samples, representative of actual construction which will be used, for verification of aesthetics and application, fastening, or joining methods.

1.11 DESIGN DATA AND TEST REPORTS

A. Submit 3 copies each to Architect.

B. Submit information for assessing conformance with and design concept expressed by Contract Documents.

C. Design Data, Design Calculations, Delegated Design: Submit where specified, signed and sealed by a professional engineer licensed in Project location.

1.12 CERTIFICATES

A. Submit written certification, signed by manufacturer's representative, supplier, Contractor, or others as specified.

B. Indicate that material or product conforms to or exceeds specified requirements.

C. Submit supporting reference data, affidavits, current test results, and other certification as appropriate.

D. Include statements to certify compliance with provisions for certified specialists, product performance, Code compliance, and as specified.

E. Meet or exceed specified requirements.

1.13 MANUFACTURER'S INSTRUCTIONS

A. Include Manufacturer's printed instructions for delivery storage, preparation, assembly, installation, start-up, adjusting, balancing, and finishing as specified for individual specification Sections.

B. Include special procedures, project conditions, and environmental criteria required for application or installation.

1.14 SAFETY DATA SHEETS (SDS)

A. To the extent that Safety Datasheets are available, subcontractors shall submit to Construction Manager.

B. Construction Manager will keep posted at the Project site.

C. Do not submit to Architect. Safety Datasheets will not be reviewed.

1.15 MANUFACTURER FIELD REPORTS

A. Submit each report within 10 days of observation.

B. Content: Include information necessary for assessing conformance with and design concept expressed by Contract Documents.

1.16 FIELD SUBMITTALS

A. Provide templates, inserts, and as applicable in timely fashion to other trades

B. Submit Field Samples and Mockups under provisions of Section 014000.

1.17 SUBMITTALS TO AUTHORITIES HAVING JURISDICTION

A. Submit bidder design packages, separate permits, and acceptance packages directly to building code authorities having jurisdiction as required by those authorities.

B. Conform to submittal procedures specified by this Section for transmittal and review of submittals by Architect prior to transmitting to Regulatory Authorities.

1.18 OTHER SUBMITTALS

A. Conform to requirements of each Section for submittals required by that Section.

PART 2 - PRODUCTS (Not Used)

PART 3 - EXECUTION (Not Used)

END OF SECTION

THIS PAGE INTENTIONALLY LEFT BLANK

SECTION 014000 - QUALITY REQUIREMENTS

PART 1 - GENERAL

1.1 REGULATORY REQUIREMENTS

A. Certain regulatory requirements are indicated on Drawings or Specifications.

B. Owner and Architect are not responsible for monitoring Contractor's conformance to codes, laws or other Regulatory Requirements which may or may not be indicated.

C. Contractor shall obtain all necessary permits, which shall be paid for General Contractor.

D. Inspections performed or failed to be performed by Owner, Architect, and other consultants under employment by Owner do not waive or change Contractor obligations, and do not constitute approval of the Work or portions of the Work.

E. Contractor Obligations:
1. Perform Work in conformance with requirements of governing agencies and other Regulatory Requirements.
2. Keep each part of the work accessible and exposed as required for inspection purposes until approved.
3. Schedule and coordinate inspections and gain approvals required by governing agencies in timely manner, as necessary for Owner occupancy of site within Contract Time.
4. Inform Building Department, Fire Department, and other governing agencies in timely manner of changes in the Work affecting Regulatory Requirements.
5. Promptly forward to Architect, inspections reports, orders, permits, and other directives and correspondence received from inspector or governing agency having jurisdiction over the Work.
6. Promptly notify Architect where Contract Document appear to conflict with Regulatory Requirements.
   a. Conform to specified provisions which exceed requirements of regulatory authorities.
   b. Notify Architect where regulatory requirements exceed or are more stringent than as specified.
7. Refer questions about interpretation of accessibility to Owner.
8. Regulatory Requirements that are current at date of Building Permit or are required by authorities having jurisdiction take precedence over those specified.
9. Infectious Disease Control: Comply with current recommendations of CDC, state, local, and other authorities applicable to Project.

1.2 DEFINITIONS

A. Definitions of Words Used by Project Manual:
1. Approved, Accepted: Consented to by Architect or Owner in so far as item or action meets or exceeds provisions of Contract Documents. In no case will "approved" or "accepted" be interpreted as assurance to Contractor that requirements of the Contract Documents have been fulfilled. Where used, Architect and Owner are sole judge of quality and suitability.
2. As Directed: As directed by Architect.
3. As Required, As Needed, As Necessary: As required to suitably complete the Work, at the direction of Architect.
4. As Selected: As selected by Architect. It is not necessarily limited to manufacturer's standard line of colors, finishes, and details, except as otherwise stated.
5. Certificate, Certified: Written statement with the signature of a qualified and authorized representative.
6. Coordinate: Coordinate scheduling, submittals, work of Project Manual, Drawings, work of subcontractors, suppliers, and other means and methods as necessary for efficient, sequential, and orderly construction progress.
7. Drawings: As defined by General Conditions and as listed in Index to Drawings and other drafted, sketched, or pictorial illustrations included in the Contract Documents.
8. Experienced or Qualified: Unless otherwise specified, an entity who has successfully completed a minimum of 3 projects within the past 5 years of similar type of work and complexity to this Project, and is properly licensed for this type of work in the Project jurisdiction.

9. Field Samples: Example field application of finishes, such as paint or other finish materials. Accepted field samples establish a minimum standard of workmanship.
10. Furnish, or Supply: Arrange, purchase, and deliver to site ready for intended inclusion into the Work. "Furnish" and "Supply" may be used interchangeably.
11. Includes, Including: Including but not limited to.
12. Indicated: As reasonably implied and necessary in conformance with work specified, drawn, or required for completion, including written information and drawings of Contract Documents.
13. Install: To receive at site and to complete work required to incorporate it in place, ready for intended operation and use.
14. Installer, Erector, and Applicator: Person or entity engaged by Contractor, subcontractor, or sub-subcontractor for performance of work indicated by Contract Documents, such as installation, erection, or application of specified products and systems.
15. Manufacturer's Instructions: Manufacturer's written or verbal directions or recommendations, specifications, product literature, and product data as required to complete work in accordance to manufacturer's system.
    a. Unless otherwise noted or directed, install work in accordance with manufacturer's instructions for best results. Do not omit preparatory steps or installation procedure unless specifically modified or exempted by Contract Documents or approved by Architect.
    b. Where more than one manufacturer is involved in the work or its component parts, follow requirements that are more stringent by each manufacturer as required to properly complete work. Submit discrepancies or conflicts to Architect for resolution.
    c. Conform to manufacturer's instructions even where not specifically stated by Contract Documents.
    d. Where Contract Documents conflict with manufacturer's instructions, notify Architect for resolution. Do not proceed until written authorization is received.
16. Mockups: Full-size erected or installed assemblies used to ensure understanding and coordination of required construction for testing and observation and for establishing standards by which workmanship will be judged.
17. Product: Materials, equipment, and other items provided by Contractor, covered under Part 2 of each Section.
18. Professional Engineer: Qualified, professionally licensed and acceptable to authorities having jurisdiction in Project location.
19. Project Manual: Written portions of Contract Documents, as listed in the Table of Contents.
20. Project Site: The site location made available to Contractor for performing construction activities in performing Work of this Project. The extent of the Project Site is shown on the Drawings.
21. Provide: Furnish, and install complete, in place, ready for intended operation and use.
22. Regulatory Requirements and Authorities Having Jurisdiction (AHJ): Codes, laws, statutes, and lawful orders established by building code authorities, State and Federal statute, local jurisdictions, fire marshal, and other governing and regulatory authorities having jurisdiction over the work.
23. Shall: Mandatory requirement.
24. Shown: As reasonably implied by Drawings of the Contract Documents.
25. Specialist: Person, firm, or entity of established reputation (or if newly organized, whose personnel have previously established a reputation in the same field), regularly engaged in and maintaining an experienced force of skilled workers qualified to perform items of work required by Construction Documents, such as in manufacturing, fabricating, installing, and applying specified products and systems.
26. Specified: As reasonably implied by Project Manual.
27. Verify: To determine the condition of existing elements at the project prior to beginning work.
28. Work: As defined by General Conditions. In addition, refers to work (not capitalized) of individual Sections for complete and finished systems, and the Work (capitalized) to complete requirements of the Contract Documents for Project completion as a whole.

B. Language Used by Project Manual:
    1. Singular and Plural: Items referenced, whether as singular or as plural in number, are to be taken to mean as many such items as required to complete the Work.
    2. Tense: Present tense words include future tense.

3. Gender: Words are to be taken as gender neutral. Words in masculine and feminine gender are to be taken as interchangeable and are not to be interpreted as masculine or feminine, except where specifically stated. Words in masculine gender include feminine and neuter genders.
4. All, Each, Any, Every, (etc): These and similar words are generally omitted and their meaning is implied. Read implications of these words into requirements of phrases such as, "Balance and adjust (all) dampers".
5. Streamlined Language: Language is abbreviated or streamlined and includes short imperative phrases in place of complete sentences.
6. Information is directed to Contractor, unless specifically stated otherwise.
7. Contractor: As identified by the Agreement and defined by the Conditions of the Contract as party to the Contract with the Owner.
8. Colons following Articles: Mean, “shall be”, and “shall conform to”, and “Contractor shall”. Examples:
   a. Flamespread: ASTM E 84, less than 20, means “Flame spread shall conform to ASTM E84 and shall be less than 20”.
   b. Base: Pack solid with non-shrink grout, means “Contractor shall pack base solid with non-shrink grout”.
9. Acronyms and References: Refer to Gale's Encyclopedia of Associations.

C. Dimensions and Measurements on Drawings:
   1. Dimensions govern. Do not rely on scaled measurements.
   2. Check dimensions and field verify with respect to adjacent or incorporated work. Bring conflicts to Architect’s attention for interpretation and resolution.

1.3 REFERENCED STANDARDS

A. Conform to requirements of referenced standards for products and workmanship by association, trade, industry or other consensus standards. Specified reference standards are made part of Contract Documents, except where requirements that are more stringent are specified or are required by code.

B. Conform to most current edition of reference standards at bid date of Contract Documents, except when otherwise required by authorities having jurisdiction. If a date is specified which differs from most current date, assume date specified and verify with Architect.

C. Contractual relationships, duties, and responsibilities of parties to the Contact, including Owner, Architect, engineers, and other consultants are stated under provisions of this Contract. Reference standard document provisions that alter these contractual relationships by mention or inference are void under work of this Contract.

1.4 QUALITY ASSURANCE

A. Schedule, sequence, coordinate, and oversee, as necessary to maintain quality control for the Work and as necessary to make parts of the Work fit together within critical path as defined by Project Schedule.

B. Monitor quality control over suppliers, manufacturers, products, services, site conditions, and workmanship, to produce Work of specified quality.

C. Conform to manufacturer's instructions, reference standards, regulatory authorities, and provisions of Contract Documents to establish minimum level of quality for work of each Section.
   1. Where requirements appear to be in conflict, assume the more stringent and costly requirements. Promptly request clarification from Architect before submitting bid, or if not detected until under contract, before proceeding with the Work.

D. Perform work by company specializing in and qualified to produce workmanship of specified quality for size and complexity of Project.

E. Secure products in place with positive anchorage devices designed and sized to withstand stresses, vibration, physical distortion, or disfigurement.

F. Give persons representing or engaged by Owner free, safe, and unencumbered access to the Work, and portions of the Work.

G. Give persons representing or engaged by Owner access to off-site facilities where components of the Work are stored, work takes place that that will be included into or otherwise affect the Work.

H. Owner reserves right to photograph, videotape, or otherwise to record through visual, audio, electronic, and written means, work and work related events in order to track progress and quality of the Work.

1.5 CONTRACTOR'S PROJECT ENGINEER

A. Refer to Conditions of the Contract for related requirements.

B. Prepare measurement and payment documents including application for payment, modifications to the contract, unit prices, and allowances. Prepare and verify coordination with schedule of values specified by the Conditions of the Contract.

C. Prepare submittal schedule as specified in Section 013300 and include submittals with lead times within critical path of progress schedule.

D. Review submittals for clarity, accuracy, completeness, coordination with other work, and conformance to specified requirements.

E. Verify that format, number, and other provisions conform to Section 013300.

F. Do not accept or forward for Architect's review submittals that contain product substitutions not accepted by specified substitution request procedures.

G. Stamp and certify Contractor's review of submittals before submitting to Architect.

H. Coordinate and facilitate testing and inspections.

I. Provide a weekly QC report to the Owner and Architect listing all test and results, QC activities, materials delivered and verified to the site, document QC questions, clarifications, RFIs and ongoing coordination with the Owner, Architect, subcontractors, outside agencies, and authorities having jurisdiction.

J. Maintain Project progress drawings continuously and make them available to the Architect or Owner at all times.

K. Conduct project closeout administrative procedures including preparation and submittals of operating and maintenance manuals, project record documents, warranties, and other closeout documents.

1.6 TOLERANCES

A. Monitor fabrication and installation tolerance to produce acceptable Work. Do not permit tolerances to accumulate.

B. Conform to specified tolerances. When manufacturers' tolerances conflict with provisions of Contract Documents, request clarification from Architect before proceeding.

C. Make adjustments to conform to specified tolerances before securing products in place.

1.7 MOCKUPS AND FIELD SAMPLES

A. Construct specified mockups and field samples at designated Project location, or where directed by Architect.

B. Illustrate finishes, coatings, patterns, and systems.

C. Construct full-size mockups and field samples for review of construction systems to establish standards by which materials and workmanship will be judged.

D. Provide full scale mockups with specified attachments, anchorage devices, flashings, sealants, finishes, and colors for a complete and finished system.

E. Provide in dimension as specified, or when not specified, provide in sufficient size and completeness, in consultation with Architect, to illustrate each aspect of the work included in mockups.

F. Do not install mockups as part of permanent Work, except as specified or directed by Architect.

G. Maintain Owner's and Architect's access to mockups and field samples.

H. Where covered, lost, or damaged, arrange with Architect to provide new mockups and field samples for acceptance.

I. Proceed with remaining fabrication/procurement of materials and installation/application only upon Architect's approval of mockups and field samples.

J. Protect mockups and field samples until completion.

K. Unless otherwise specified, remove mockups when directed to do so, or if not directed, at Project completion.

1.8 MANUFACTURERS' INSTRUCTIONS

A. Conform to manufacturers' instructions in full detail, including each step in sequence.

B. Where a manufacturer's instructions conflict with provisions of Contract Documents, including Regulatory Requirements and Reference Standards, request written clarification from Architect before proceeding with work.

1.9 FIELD QUALITY CONTROL INSPECTIONS AND TESTING

A. Conduct specified field quality control testing by Contractor's Project Engineer for in-place work as required to verify conformance to specified air, water, thermal, structural, tolerances, and other performance and design requirements.
   1. Maintain ease of site access to review testing information by Owner and Architect.

B. Conduct inspections and testing that conform to testing procedures and criteria published by specified reference standards, testing and laboratory agencies, and building codes.

C. Where initial tests fail to pass specified testing requirements, provide work needed to meet or exceed inspection and testing criteria and conduct additional testing to verify conformance.

D. Independent inspection, testing, and laboratory services may be retained by Owner to conduct field quality control inspection testing services.
   1. Make provisions as needed to aid testing agency in scheduling, accessing, and performing services requested by Owner.
   2. Cost of initial inspections and tests at Owner request will be borne by Owner.
   3. Costs of subsequent inspections and tests, needed to rectify failed initial inspection and test results, will be paid by the Owner and deducted from Contract Sum.

E. Independent inspection and testing services are to be certified, accredited, approved, or recognized by qualifying agencies, organizations, or institutions as specialists in conducting these services, or accepted by Architect.

1.10 SPECIAL TESTS AND INSPECTIONS

A. Special Inspector: Employed by Owner as Owner's agent and to conform to provisions of code-required structural tests and special inspections.

B. Coordinate with the special inspector's work required by authorities having jurisdiction. Provide samples for testing, facilities for storing field samples, and access to work at Project site and sources off site in order to expedite tests and inspections.

1.11 MANUFACTURERS' FIELD SERVICES

A. Require manufacturers to supply field services as specified and as necessary to verify conformance to manufacturer's instructions, to achieve manufacturer's warranty, and to conform to other provisions of Contract Documents and Regulatory Authorities.

B. Require manufacturer's trained and qualified personnel to inspect site conditions, surfaces, installation, quality of workmanship, start-up of equipment, testing adjusting and balancing of equipment, and other field services as necessary to maintain quality assurance of Work.

C. Require manufacturers and suppliers to provide and assist in initiating instructions when necessary.

D. For non-conforming work, submit manufacturer's written report to Architect within 10 days of observation. List observations and recommendations.

E. When site decisions and instructions are received, that are contrary to published instructions by manufacturers, promptly report to Architect and verify acceptance before continuing with work.

F. Manufacturer's Reports: Submit under provisions of 013300.

1.12 CERTIFICATIONS

A. Submit written certifications, signed by authorized representative, officer, or other person legally entitled to represent business, firm, or organization submitting certification.

B. Provide backup data, testing procedures by independent testing agency, and other information as necessary to confirm that content of written certification meets or exceeds that required by Contract Documents.

C. Indicate conformance to, meeting or exceeding, that specified by individual Sections.

1.13 TEST DATA

A. Submit two copies of test data including calculations from independent inspection agencies, testing laboratories, professional engineers, and as specified for each Section.

B. Conform to requirements of Regulatory Requirements for code related certifications.

C. Indicate acceptance or results of testing.

D. Certify test data in letter signed by authorized representative.

1.14 LIMITS ON AUTHORITY

A. Special Inspectors, Testing Agencies, and Laboratory Services are not authorized to:
   1. Release, revoke, alter, or expand requirements of Contract Documents.
   2. Approve or accept work.
   3. Assume or perform duties of Contractor.
   4. Stop work or authorize additional work.

PART 2 - PRODUCTS (Not Used)

PART 3 - EXECUTION (Not Used)

END OF SECTION

SECTION 014533 - CODE-REQUIRED SPECIAL INSPECTIONS AND PROCEDURES

PART 1 - GENERAL

1.1 REGULATORY REQUIREMENTS

A. Building Code edition indicated on Drawings, Chapter 17, and building code authorities having jurisdiction for requirements pertaining to structural tests and special inspections.

1.2 STATEMENT OF SPECIAL INSPECTIONS

A. Refer to Structural Drawings for Statement of Special Inspections required by IBC Chapter 17.

1.3 SEISMIC CERTIFICATION OF NONSTRUCTURAL COMPONENTS:

A. Manufacturer Certification for Designated Systems: Conform to ASCE/SEI 7 as amended by IBC Chapter 17.

B. Architectural, Mechanical, and Electrical Components, Supports, and Attachments: Conform to ASCE/SEI 7for manufacturer certifications that components are seismically qualified by one of following:
   1. Analysis.
   2. Shake Table Testing: Conforming to ASCE/SEI 7.
   3. Experience Data: Conforming to ASCE/SEI 7.

C. Mechanical and Electrical Equipment: Conform to ASCE/SEI 7 a for submittal of manufacturer certifications that equipment will remain operable following a design earthquake based upon one of following testing procedures:
   1. Shake Table Testing: Conforming to ASCE/SEI 7.
   2. Experience Data: Conforming to ASCE/SEI 7.

D. Components with Hazardous Contents: Conform to ASCE/SEI 7 for manufacturer certifications that containment will be maintained following a design earthquake based upon at least one of following procedures:
   1. Analysis.
   2. Shake Table Testing: Conforming to ASCE/SEI 7.
   3. Experience Data: Conforming to ASCE/SEI 7.

E. Submit manufacturer certifications with evidence demonstrating compliance to authority having jurisdiction following submittal, review, and acceptance by Architect.

1.4 DESCRIPTION OF TESTING AND INSPECTION SERVICES

A. Special Inspector: Employed by Owner as Owner's agent in conformance to provisions of IBC Chapter 17.
   1. Perform inspection services for work listed under IBC Chapter 17, and additional special inspections as listed in Statement of Special Inspections required for:
      a. Special Inspections for Wind Resistance: As required by IBC Chapter 17.
      b. Special Inspections for Seismic Resistance: As required by IBC Chapter 17.
      c. Structural Testing for Seismic Resistance: As required by IBC Chapter 17.
   2. Qualifications:
      a. Approved agency, as defined by IBC, registered by regulatory authority having local jurisdiction.
      b. Qualified as ACI Concrete Construction Inspector or equivalent for concrete inspections.

B. Geotechnical (Soils) Engineer: Employed by Owner to conduct geotechnical investigations and reporting and to conform to soils investigation and special inspection provisions of IBC Chapter 17 and 18.
   1. Conduct construction investigations and soils engineering services, for work pertaining to soils, drainage, shoring, and related earthwork excavations, grading, and filling to satisfy conformance to soils inspection of IBC Chapter 17 and conformance with provisions of IBC Chapter 18.
   2. Perform inspection, testing, and verification of substrate conditions for foundations, slabs-on-grade, and other site construction.
   3. Determine conditions requiring special procedures and make report to Owner and Architect detailing observed topographical conditions.

C. Special Inspector, Geotechnical Engineer, and other testing and inspection agencies employed by Owner will perform additional tests, requested by Owner, Architect, or building code official as necessary to uncover or make accessible work for purposes of testing and investigation.
   1. Owner will deduct from Contract Sum, cost of additional testing showing work in non-conformance with Contract Documents.

1.5 REPORTS BY TESTING AND INSPECTION SERVICES

A. Special Inspector Report Requirements: Conform to IBC Chapter 17.

B. Special inspector will keep records of inspections and submit inspection reports to Architect and building code official.
   1. Include for Each Inspection Report:
      a. Date issued
      b. Project title and number.
      c. Location of Project.
      d. Name of inspector.
      e. Testing laboratory address, and telephone number.
      f. Identification of product and specification section number and title.
      g. Date and time of sampling or inspection.
      h. Record of weather conditions.
      i. Date and type of test.
   2. Inspection Report Results:
      a. Location of work and inspection and testing results.
      b. Whether each completed work result conformed to Contract Documents.
   3. Discrepancies in Work:
      a. Where not in conformance special inspector will bring promptly to attention of Contractor.
      b. Where not corrected, special inspector will bring to attention of building official and Architect.
      c. Special inspector will make final report noting discrepancies and corrective measures to be taken prior to continuing or starting related work that may cover or make inaccessible work requiring correction.

1.6 SPECIAL INSPECTOR LIMITS ON AUTHORITY

A. Special Inspector, Testing Agencies, and Laboratory Services are not authorized to:
   1. Release, revoke, alter, or enlarge on requirements of Contract Documents.
   2. Approve or accept work.
   3. Assume or perform duties of Contractor.
   4. Stop work or authorize additional work.

1.7 GEOTECHNICAL ENGINEER LIMITS ON AUTHORITY

A. Geotechnical Engineer may approve or reject some portions of the work and may recommend to Architect that the Contractor do work which may enlarge on or diminish Work.

1.8 CONTRACTOR RESPONSIBILITIES

A. Statement of Responsibility: Conform to IBC Chapter 17 for written statement of responsibility acknowledging awareness of responsibility for construction of each wind-resisting and seismic-force-resisting system, designated seismic systems, and each wind-resisting and seismic-resisting component listed in Statement of Special Inspections, as submitted to Plans Examiner by Special Inspector, and as required by IBC Chapter 17.
   1. Submittal Requirements:
      a. Submit to building code official and Owner in conformance with IBC Chapter 17.
      b. Submit to Architect for review, conforming to Section 013300, and prior to submitting to building code official.

B. Employment of Special Inspector, Geotechnical Engineer, structural observations, other testing and inspection agencies, and structural observation by registered design professionals does not relieve Contractor of responsibility to perform Work in conformance to provisions of Contract Documents.

C. Cooperate with Special Inspector, Geotechnical Engineer, structural observations, and other special testing and inspection agencies employed by Owner. Provide access to work at Project site and sources off site in order to expedite provisions of this Section.

D. Coordinate, sequence, and schedule inspections and testing and show on Construction Progress Schedule.
   1. Give minimum 48 hours notice to allow time for assignment of personnel and scheduling of tests by testing and inspection agencies
   2. Reimburse Owner for costs of travel, time and expenses incurred when inspections or tests cannot be performed after notice and arrival of testing and inspection personnel.

E. Maintain copies of inspections, testing, and laboratory reports at Project Site as Project Record Documents.

PART 2 - PRODUCTS (Not Used)

PART 3 - EXECUTION

3.1 STRUCTURAL SPECIAL INSPECTIONS AND PROCEDURES

A. Special Inspector will conduct verification and inspections, including special inspections and testing for seismic resistance required by IBC Chapter 17 and as specified by individual specification Sections. Additional testing will be performed as requested by Architect or building code official.

B. Fabricator Plants:
   1. Shops Where Load Bearing Members and Assemblies are Being Fabricated: Special Inspections will be preformed, conforming to provisions of IBC Chapter 17, except for approved fabricators.

C. oncrete Construction:
   1. Structural Concrete Specified by Division 03: Special Inspections will be preformed conforming to provisions of IBC Chapter 17.
   2. Reinforcing Steel:
      a. Prior to placing of reinforcing steel, verify that reinforcing complies with requirements of Structural Notes and Drawings.
      b. Verify grade, size, and placement of reinforcing steel, fabric, and embedded items prior to closing off by formwork and concrete or grout placement.
      c. Check condition of reinforcing and embedded items for bond integrity with concrete.
   3. Concrete Delivery and Placement:
      a. Check and keep record of batch tickets for compliance with required mix design.
      b. Remain on project site during placement of structural reinforced concrete.
      c. Prior to placement of concrete, Inspect:
         1) Accuracy, configuration, and cleanliness of formwork.
         2) Cleanliness, quantity, and placement of reinforcing steel.
   4. Aggregates for Normal Weight Concrete: Sample and perform Gradation Test to ASTM C33 on first day and every other day thereafter during course of construction.
   5. Testing and Sampling of Concrete Mix Water:
      a. Submit 1 test with the mix design.
      b. Submit 1 test each week during course of concrete placement.
      c. Test six cubes each test. 3 cubes with wash water and 3 cubes with potable water.
      d. Conduct chemical tests, 1 per week during course of concrete placemen
   6. Sampling for Concrete Compression Tests:
      a. Take representative samples of fresh concrete conforming to ASTM C172 for each concrete mix delivered to project.
         1) No samples are required for less than 5 cubic yards of concrete.
         2) Take one sample for placement of 5 to 25 cubic yards.

3) Take one additional sample for each additional 150 cubic yards.
4) Minimum of one sample each day mix is delivered

b. Make and cure test 4 inch by 8 inch test cylinder specimens conforming to ASTM C31.

7. Concrete Compression Tests of Test Cylinders:
   a. Test to ASTM C39 for each concrete mix conforming to following:

	Number of Cylinders to be Tested and Broken	
Age at Test (Days)	Acceptance Age: 56 Days	Acceptance Age: 28 Days
7	1	1
28	2	2
56	2	-
Hold	1	1

   b. Basis for Compliance:
      1) Meet or exceed specified compressive strength for average of 3 consecutive strength tests for each concrete mix.
      2) Individual strength test average of 2 cylinders does not fall more than 500 psi below specified compressive strength.
   c. Test Report: Indicate exact mix tested, minimum aggregate size, location and type of concrete placement, cylinder identification, date of receiving test cylinder in laboratory, cement brand and type, and admixtures used.
   d. In-Place Concrete Core Tests: Conduct further testing, at Contractor's expense, of concrete where cylinder test cylinders fall 500 psi below specified compressive strength or where tests of field-cured cylinders indicate deficiencies in protection or curing.
   e. Testing Procedure: Test to ASTM C42. Take at least three 2 inch diameter core samples from concrete placement locations considered questionable as directed by Architect.
   f. Damaged Core Samples: Replace samples damaged during removal or subsequent testing with new core sample.
   g. Basis for Acceptance: Average compressive strength of core samples at least 85 percent of that specified and no single core sample less than 75 percent of that specified. Where not accepted, Structural Engineer analysis and correction of work will be made at Contractor's expense.
   h. Core Holes: Repair at Contractor's expense using accepted dry pack or specified non-shrink grout.
8. Concrete Slump Tests: Make slump test for each batch delivered and at least 1 test each hour during continuous placements. Verify that batches are consistent. Test each batch to ASTM C143.
9. Air Content: Test each set of concrete compression test cylinders to ASTM C231 at minimum one test each day.
10. Concrete Curing Procedures: Conduct inspections and verify compliance with specified requirements.
11. Anchors: Inspect epoxy anchors and expansion bolts installed in concrete as defined by IBC Chapter 17.

D. Masonry Construction:
   1. Engineered Masonry Specified by Division 04: Special Inspections will be preformed conforming to provisions of IBC Chapter 17 and applicable Table.
   2. Inspect grout spaces and cleanouts, take prism and test samples, inspect after placement of reinforcing steel, and during grouting operations, except as otherwise permitted by Code.

E. Wood Construction:
   1. Wood Structural Elements and Assemblies specified by Division 06: Special Inspections of will be performed for following:
      a. Prefabricated: Conforming to IBC Chapter 17 for inspections of fabrication plants.
      b. Site-Built: Conforming to IBC Chapter 17

F. Load-Bearing Soils:
   1. Existing Site Soil Conditions, Fill Placement, and Load-Bearing Requirements: Special Inspections by Geotechnical Engineer will be performed conforming to IBC Chapter 17 and Chapter 18.

G. Miscellaneous Tests And Inspections

1. Special Cases: As determined by Building Code Official or as requested by Architect.

3.2 SOILS AND FOUNDATIONS INSPECTION AND PROCEDURES

A. Site Work Foundation and Soils Investigations: Geotechnical Engineer will conduct investigations and special inspections conforming to IBC Chapter 17 to meet provisions of IBC Chapter 18, and as specified by individual specification Sections.

B. Conduct special investigations in conformance to IBC Chapter 17 to verify conformance with IBC Chapter 18 and as indicated by Civil, including:
   1. Special Grading, Excavations, and Filling
   2. Structural Subgrade:
      a. Excavation of unsuitable material.
      b. Testing and acceptance or rejection of on-site and imported material for use as structural fill.
      c. Preparation of subgrade surfaces to receive additional fill, concrete footings, or concrete slabs.
      d. Placement and compaction testing of structural fill.

3.3 SPECIAL INSPECTIONS FOR WIND REQUIREMENTS

A. Special inspections will be conducted as required by provisions of IBC Chapter 17.

3.4 SPECIAL INSPECTIONS AND TESTING FOR SEISMIC RESISTANCE

A. Special Inspections will be conducted conforming IBC Chapter 17 including AISC 341, Appendix Q, Quality Assurance Plan.
   1. ructural Wood:
   2. Cold-Framed Steel Light-Frame Construction:
   3. Storage Racks:
   4. Architectural Components:
   5. Mechanical and Electrical Components:
   6. Designated Seismic System Verifications:
   7. Seismic Isolation Systems:

B. Structural testing will be conducted conforming to IBC Chapter 17 and Quality Assurance Plan in AISC 341.

END OF SECTION

THIS PAGE INTENTIONALLY LEFT BLANK

SECTION 016000 - PRODUCT REQUIREMENTS

PART 1 - GENERAL

1.1 DEFINITIONS

A. Product: Materials, systems, and equipment provided by under these Contract Documents.

B. Standard Warranties: Preprinted published warranties defining warranty provisions, limitations, and exclusions, and specifically endorsed by individual manufacturers to Owner.

C. Special Warranties: Written warranties required by or incorporated into Contract Documents that increase warranty provisions, including time extensions and Owners rights, beyond that provided by standard published warranties.

D. Correction Period: Refers to standard correction period as required by Conditions of Contract requiring Contractor to warrant Work for a one year period following Substantial Completion.

1.2 MAINTENANCE MATERIAL SUBMITTALS

A. Deliver spare parts, extra stock and similar items to the Owner packaged and labeled with appropriate identification for storage. Obtain receipts from Owner.

1.3 WARRANTY SUBMITTAL REQUIREMENTS

A. Submit with Contractor's Closeout Submittals.

B. Prior to final execution, not less than 10 days prior to Substantial Completion, submit draft to Architect for review and acceptance by Owner.

C. Assemble executed warranties by manufacturers, fabricators, suppliers, and others providing warranties as specified by individual Sections. Include with each warranty:
   1. Full description of Warranty provisions.
   2. Warrantor (entity providing Warranty) with name of authorized representative, postal address, telephone number, email address, and web site.
   3. Beginning and duration dates of Warranty and related Service and Maintenance Contracts.
   4. Procedural instructions for exercising warranty.
   5. Exclusions, limitations, and instances affecting warranty provisions.
   6. Installer name, address and telephone number.
   7. Name of local representatives and services responsible for warranty work during warranty period for warranties executed by out-of-area warrantors.

D. Organize warranty documents into an orderly sequence based on Table of Contents of Project Manual.

E. Bind copies of Warranties into Operations and Maintenance Manuals.

1.4 FORM OF WARRANTY SUBMITTALS

A. Prepare in triplicate packets.

B. Format Size: 8-1/2 inch by 11 inch heavy bond, low acid paper, punched for three-ring binder. Fold larger sheets to fit into binders.

C. Binders: Commercial quality, metal hinged, 3-ring vinyl covered loose-leaf binders, minimum 1 inch and maximum 3 inch thick as necessary to accommodate contents, and sized to receive 8-1/2 inch by 11 inch paper.
   1. Print WARRANTIES on front, back and spine along with Project title and date.

D. Cover Sheet: Identify date, title of Project, and contract information for Contractor, Owner, and Architect, including postal address, telephone number, email address, and web site for each.

E. Table of Contents: Neatly type in orderly sequence indexed to Project Table of Contents.

F. Paper Dividers: Heavy paper with celluloid covered tabs for each separate warranty, marked with Section and product identifier for each warranty.

1.5 QUALITY ASSURANCE

A. Deliver, store, and handle Products in accordance with manufacturer's instructions, using means and methods that will limit damage, deterioration, loss, and theft.

B. Supply new Products, except where salvaged Products are specifically indicated for reuse by Contract Documents.

C. Source Limitations: Wherever possible, select related Products and Products of same kind from single source suppliers and manufacturers.

D. Compatibility: Where Product choice is an option, furnish Product based upon compatibility with other Product options, specified Products, and approved Products.

E. Where possible, provide interchangeable components by same manufacturer for each Product.

F. Labels and Nameplates: Do not permanently attach or imprint labels or trademarks on surfaces of Products exposed to view and at building exterior.
   1. This does not apply to operating instructions on equipment and life safety warning labels.
   2. Where labels are required to indicate code compliance, locate on inconspicuous surfaces.

1.6 PRODUCT WARRANTIES

A. Start of Warranties: Warranty periods take effect at date of Substantial Completion.

B. Warrant materials, products, equipment, systems, and services incorporated into Work of this Contract as specified by individual specification Sections and required by Conditions of Contract.
   1. Meet or exceed terms and conditions of manufacturer's published Standard Warranties, applying to purchase and use of manufacturers' products, equipment, systems, and services.
   2. Where specified, provide written extended Special Warranties meeting or exceeding provisions of published Standard Warranties.

C. Correction Period: Where no warranty provisions are specified, conform to minimum one-year correction period required by Conditions of Contract for correction of defective work.
   1. Include uncovering and repairing damage associated with defective work.
   2. Do not limit statute of limitations, defined by law, that permit Owner to seek compensation for non-conforming and defective work.

D. Corrective Measures:
   1. When requested by Owner, correct or replace defective work, substandard work, and work not conforming to provisions of Contract Documents.
   2. Make corrections in conformance to manufacturer instructions and in conformance to current laws and regulatory requirements by authorities having jurisdiction
   3. Reinstate warranties by issuing new warranties that begin at time of completion of corrected, restored, and replaced work. Meet or exceed provisions of original warranties except for an equitable adjustment for depreciation at patching and minor repairs to larger portions of work.
   4. Assume full adjustment costs to meet Warranty provisions without regard as to whether or not Owner has benefited from a portion of Warranty period. Do not prorate.
   5. Where work has been damaged due to failure of warranted work or has been removed to gain access to warranted work, repair and replace as necessary to reinstate original warranties and to meet original provisions of Contact Documents.
   6. Coordinate corrective work to cause least interruption and disruption to Owner activities and occupation of site.

E. Owner's Rights:
   1. Owner reserves right to make corrections, 10 days after giving Notice, at Contractor's and Contractor's Surety's expense, upon failure of Contractor to conform to terms of Warranty.

2. Owner reserves right to make emergency repairs without first giving Notice to Contractor, at Contractor's and Contractor's Surety's expense, where delay may result in loss or damage to Owner.
3. Owner reserves right to reject warranties and product selections that conflict with provisions of Contract Documents.
4. Written warranties made to Owner are in addition to implied warranties, and do not limit or weaken duties, obligations, rights, statutory rights to legal redress, and remedies otherwise available under law.
5. Warranty periods are not to be interpreted as limitations on time in which Owner can enforce other duties, obligations, rights, or remedies.
6. Owner will not be bound by Warranty provisions that contain limitations, exclusions, and other provisions that reduce implied or expressed product performance to less than had no Warranty been issued.

1.7 DELIVERY, STORAGE, AND HANDLING

A. Store and handle in accordance with manufacturer's printed instructions. Where manufacturer does not publish printed instructions, comply with applicable industry standards and guidelines.

B. Product Delivery:
1. Schedule Product deliveries to meet construction Progress Schedule and in time to facilitate inspection prior to installation.
2. Schedule delivery of products affecting Progress Schedule critical path to complete project within time of completion stated in the Agreement. Associated cost increases due to failure to meet accelerated delivery schedules and deliveries of long lead-time products are responsibility of Contractor.
3. Coordinate to avoid conflict with work and site conditions.
   a. Limit long term site storage, overcrowding of limited storage space, and conflict with available equipment and personnel for handling Products.
   b. Move site storage that interferes with work of separate contracts.
4. Coordinate delivery to limit storage time for Products that are flammable, hazardous, easily damaged, subject to deterioration, or liable for theft or loss.
5. Deliver Products in manufacturer's original protective containers or packaging, complete with intact and legible identifying labels and instructions for handling, storing, unpacking, protecting, and installing.
6. Clearly mark component parts of partial deliveries of Products to permit ease of identification, consolidation, and assembly.
7. Promptly inspect shipment for compliance with Contract Documents. Verify that quantities are correct and that Products are protected and undamaged.

C. Product Storage:
1. Store Products immediately upon delivery, and protect until installed in the work. Store in accordance with manufacturer's instructions, with seals and labels intact and legible.
2. Store sensitive Products in weathertight, climate controlled environment, maintaining temperatures and humidity, favorable to Product.
3. Store unpacked Products on shelves, in bins, or neatly stacked, accessible for inspection.
4. For exterior storage of fabricated Products, place on sloped platforms, blocking, or skids to support minimum 4 inches above ground.
5. Cover Products subject to discoloration or deterioration with impervious sheet covering.
   a. Provide ventilation to avoid moisture condensation or potential degradation of Product.
   b. Avoid use of non-vented plastic or canvas shelters that could create humidity chambers.
6. Store loose granular materials on solid surfaces such as paved areas, plywood, or sheet materials in a well-drained area. Prevent mixing with foreign matter.
7. Provide bonded off-site storage and protection when site does not permit on-site storage or protection.
8. Arrange storage of Products to permit access for inspection. Periodically inspect to verify Products are undamaged and are maintained in acceptable condition.

D. Product Handling:
1. Provide equipment and personnel necessary to handle Products, including those furnished by Owner, by methods to prevent soiling, damage, or loss of Products and protective packaging.
2. Provide additional protection during handling as necessary to prevent scraping, marring, and other damage to Products and surrounding surfaces.

3. Handle Products by methods to prevent bending or overstressing.
4. Lift heavy components only at designated lifting points.

1.8 PROTECTION OF PRODUCTS

A. Protect porous or fibrous materials and other materials subject to moisture damage. Where cleaning and drying materials damaged by moisture or that are visibly colonized by fungi either prior to delivery or during the construction phase is possible, restore such materials through cleaning and drying. Remove and replace materials that cannot be corrected by cleaning and drying.

B. Protect installed Products to prevent damage from subsequent operations. Remove protective devices when no longer needed, prior to completion of work.

C. Provide protective coverings and control traffic to prevent surface damage to finished installations. Make allowance to protect from subsequent work.

1.9 DAMAGED PRODUCTS

A. Promptly remove damaged and deteriorated Products from premises. Replace with new undamaged materials conforming to Contract Documents.

PART 2 - PRODUCTS

2.1 REGULATORY REQUIREMENTS

A. Provide identification of materials, systems, and equipment in a manner that will allow a determination of compliance with requirements of authorities having jurisdiction.

PART 3 - EXECUTION (Not Used)

END OF SECTION

SECTION 017300 - EXECUTION

PART 1 - GENERAL

1.1 DEFINITIONS

A. Cutting: Cutting into in-place work for installation or extension of other work.

B. Patching: Subsequent fitting and repair, as necessary to restore construction and finished surfaces to specified condition.

C. Cutting and Patching: Does not include following:
   1. Off-site work during manufacturing and fabrication of products.
   2. Initial work involving installation and erection processes.
   3. Drilling of holes to install fasteners.

1.2 ADMINISTRATIVE REQUIREMENTS

A. Coordinate with the Work of other Sections for sequencing and scheduling to avoid delays, and for completeness of weatherproofing system.

1.3 ACTION SUBMITTALS

A. Cutting and Patching:
   1. Notify Architect at weekly Project Meeting or in writing in advance of Project Meeting prior to executing cutting and patching affecting the following:
      a. Integrity of structural elements.
      b. Integrity of weather exposed or moisture-resistant elements.
      c. Efficiency, maintenance, or safety of operational elements.
      d. Visual qualities of sight exposed elements.
      e. Work under separate contract with Owner during Work of this Contract.
      f. Disturbance or relocation of utilities.
   2. Submit with Proposal:
      a. Identification of Project.
      b. Location and description of affected Work.
      c. Necessity for cutting or alteration.
      d. Description of proposed Work and products to be used.
      e. Firms or entities that will perform the work.
      f. Alternatives to cutting and patching.
      g. Effect on work of Owner or separate contractor.
      h. Written permission of affected separate contractor.
      i. Date and time work will be executed.
      j. Structural calculations where cutting and patching affects structural reinforcement.

B. Surveyor: Submit prior to beginning survey work.
   1. Name, address, email, and telephone number of surveyor.
   2. Key personnel assigned to Work.
   3. Copy of surveyor's State Registration.
   4. Affidavit or insurance certificate affirming that Surveyor's Errors and Omissions Insurance is in force and will remain so for duration of project.
   5. Upon request, submit client references attesting to accuracy of previous survey work.

1.4 CLOSEOUT SUBMITTALS

A. Project Record Documents: Submit record of work performed and record survey data.
   1. Submit complete, accurate, neatly organized, and legible log of control and survey work in chronological or project progress order.
   2. Record deviations that are accepted and not corrected.

3. Stamp, and signed survey verifying installation of foundations and other major site improvements.

B. Certified Site Survey: Submit prior to prior to Substantial Completion.
1. Stamp and sign by land surveyor, attesting that elevations and locations of the Work are in conformance with Contract Documents. Where not in conformance, promptly notify Architect.
2. Deliver one original signed certificate to Owner and copy to Architect/ Engineer.
3. Place on public record with local authorities having jurisdiction as Official Property Survey.

C. Certified Final Property Survey: Submit prior to Final Completion:
1. Submit 6 copies, one mylar reproducible and one DWG file format computer disk of final property survey to Architect/ Engineer.
2. Stamp and sign certification by surveyor stating that principal metes, bounds, lines, and topographical levels of project are accurately located and positioned.

1.5 QUALITY ASSURANCE

A. Surveyor Qualifications: Land surveyor registered in Project jurisdiction, acceptable to Architect/ Engineer and Owner, to perform required land-surveying services.

B. Survey Work: Conform to recognized engineering survey practices.

C. Surveyor's Log: Maintain a legible surveyor's log of control and other survey work, available for reference.
1. Record deviations from required lines and levels.
2. On completion of foundation walls, major site improvements, and other work requiring field-engineering services, prepare a certified survey showing dimensions, locations, angles, and elevations and all other pertinent survey data of construction and site work.
3. Promptly notify Architect of deviations that exceed indicated or recognized tolerances.

D. Cutting and Patching Installer/Applicator Qualifications: Skilled and conforming to qualifications of Sections specifying materials and systems being cut and patched.

PART 2 - PRODUCTS

2.1 REGULATORY REQUIREMENTS

A. Cutting and Patching for Fire-Resistive Construction: Conform to building code indicated and to maintain fire-resistive construction.

2.2 MATERIALS

A. Cutting and Patching:
1. Use new products, except where salvaged material is specified under related Sections, same as original installation, identical in color, pattern, and physical characteristics.
2. Product Substitutions: Submit for approval under provisions of Section 012500.

PART 3 - EXECUTION

3.1 EXECUTION, GENERAL

A. Conform to manufacturer's instructions, requirements of system warranties, and provisions of Contract Documents.

B. Comply with applicable installation requirements of standards and codes specified in Regulatory Requirements, Performance Requirements, and similar requirements of individual Sections.

3.2 EXAMINATION

A. Examine substrates and conditions prior to each type of installation. Notify Architect if surfaces, spaces, or conditions are not acceptable. Do not begin surface preparation or application until unacceptable conditions have been corrected.

B. Cutting and Patching: Analyze conditions and identify elements that may be subject to damage or movement during cutting and patching. Do not proceed where unsatisfactory or questionable conditions exist. Promptly notify Architect and proceed as directed.

C. Field Engineering:
   1. Verify locations of survey control points prior to starting work.
      a. Verify Owner-furnished survey documents identifying existing control points and property line corner stakes.
   2. Verify layout information shown on Drawings, in relation to property survey and existing benchmarks.
   3. Verify locations of existing underground utilities lines including locations and invert elevations at points of connection for sanitary sewers, storm sewers, and water line piping.
   4. Promptly notify Architect of discrepancies discovered prior to beginning construction lay-out for the Work.
   5. Periodically verify established field surveying layouts as Work continues.

3.3 PREPARATION

A. Protect adjacent surfaces not to be affected by installation or application of products. Prepare substrates according to manufacturer's written instructions and Contract Documents.

B. Cutting and Patching:
   1. Provide temporary support and bracing to maintain structural integrity of affected work.
   2. Protect work exposed by cutting and patching from adverse environmental conditions.
   3. Identify and take measures to avoid cutting site and building utility systems.

3.4 CONSTRUCTION SURVEYING

A. Provide field-engineering services, using recognized engineering survey practices.

B. Survey control and reference points.
   1. Control datum for survey is that established by Owner-provided property survey. Work from lines and levels established by property survey.
   2. Protect survey control points prior to starting site work. Preserve permanent reference points during construction.
   3. Replace dislocated survey control points based on original survey control.
   4. Promptly report to Architect loss or destruction of reference point or relocation required because of changes in grades or other reasons.

C. Benchmarks:
   1. Establish a minimum of two permanent benchmarks on site, referenced to established control points. Show locations, with horizontal and vertical data, on Project Record Documents.
   2. Establish benchmarks and markers for building construction and other site elements.
   3. Calculate and establish dimensions and clearances within specified and required tolerances.
   4. Do not scale Drawings.
   5. Advise work of each trade of marked lines and levels established for their use.
   6. Check to verify that locations are plumb, level, and true to line as construction proceeds.

D. Site Improvements: Locate and lay out site improvements, including pavements, stakes for grading, fill and topsoil placement, utility slopes, and invert elevations.

E. Building Lines and Levels: Locate and lay out batter boards for structures, building foundations, columns, grid line locations, floor levels, and control lines and levels as required for mechanical and electrical work.

F. Existing Utilities: Furnish information necessary to adjust, move, protect, and relocate existing utility structures, poles, lines, services, and other utility services affected by construction. Coordinate with local authorities having jurisdiction.

3.5 SURVEYS FOR MEASUREMENT AND PAYMENT

A. Perform surveys to determine quantities of unit cost and cost plus work, including control surveys to establish measurement reference lines. Notify Architect prior to starting work.

B. Contractor's Project Engineer Responsibilities: Sign surveyor's field notes or keep duplicate field notes. Calculate and certify quantities for payment purposes.

3.6 CUTTING AND PATCHING

A. Cutting and Patching, General:
   1. Provide incidental cutting, fitting, and patching as required to complete the Work and make parts of the Work fit together properly.
   2. Cut and patch installed work to gain access for specified inspections and testing procedures.
   3. Remove improperly sequenced work, defective work, and non-conforming work and replace with new work conforming to requirements of Contract Documents.
   4. Make routine penetrations for installations of piping, ductwork, and conduit through non-structural locations.
   5. Perform cutting and patching in manner in manner so as to leave no visual evidence as accepted by Architect to maintain aesthetic qualities.
   6. Conform to specific cutting and patching provisions in conformance to applicable specification Sections.
   7. Structural Elements: Where cutting is required for installation of subsequent work, verify in writing from Architect prior to proceeding and obtain direction. Include for cutting of following:
      a. Foundation construction.
      b. Bearing and retaining walls.
      c. Structural concrete.
      d. Structural framing members.
      e. Structural decking.
      f. Stair systems.
      g. Miscellaneous structural metal fabrications.
      h. Equipment support elements, including for piping, ductwork, and equipment.
      i. Plumbing, Mechanical, and Electrical Work: Refer to Division 22, Division 23, and Division 26.
   8. Where firestopping is removed, changed, or missing in fire resistive construction, such as walls, partitions, ceiling, or floor construction, patch with fire-resistive rated materials and systems in conformance to regulatory requirements indicated and firestopping provisions of Section 078400.
      a. Completely seal voids with new firestopping systems in accordance with Section 078400.
      b. Remove completed work as necessary to complete other work indicated by Contract Documents.
   9. Conform to requirements specified under Division 32 where cutting requires excavation and backfilling.

B. Cutting:
   1. Execute cutting by methods to avoid damage to portions of work to remain and to provide surfaces appropriate for patching and finishing. Where possible, review proposed cutting with original installer. Obtain, and follow manufacturer's installation instructions.
   2. Use hand tools or small power equipment designed for sawing or grinding, not hammering or chopping.
   3. Cut holes, slots, and saw cuts to obtain clean cuts and even lines in sizes and areas as necessary to complete work with no evidence of patching.
   4. Cut concrete, masonry and other such rigid materials using masonry carborundum saw or diamond core drill. Do not use pneumatic tools, except as accepted by Architect.
   5. Cut or drill, starting from exposed or finished side, into concealed to prevent marring finished surfaces.

C. Patching:
   1. Employ original installer where possible or conform to specified qualifications where not applicable for weather exposed and moisture resistant elements, and sight-exposed surfaces.
   2. Perform work in manner to achieve least evidence of patching and as necessary to achieve unblemished, uniform appearance.
   3. Match finish of patched material. Where necessary, refinish to nearest joint, intersection, natural break, or adjoining construction to eliminate evidence of patching.

4. Patch miscellaneous holes, gouges, scrapes, penetrations and other damaged surfaces on existing construction.
5. Patch using durable materials and methods, suitable to physical characteristics, tolerances, and expansion coefficients of materials being patched.
6. Where cutting and removing of existing material results in uneven finished surfaces, perform work as necessary to establish even, uniform surface of same color and pattern as original work. Where this is impractical, verify with Architect, and proceed as directed.
7. Where patching occurs at painted surface, extend paint finish coating over entire unbroken surface. Recoat as necessary to conform to appearance requirements of Section 099000.
8. Patch to maintain fire-resistive construction at construction joints, voids, openings, and penetrations in conformance to Section 078400.

3.7 ADJUSTING

A. Repair, or replace and reapply products and workmanship not in conformance with manufacturer's instructions and Contract Documents.

B. Correct defects and irregularities to complete installation/application.

C. Repair damage to work resulting from cutting and patching. Where directed by Architect, reimburse Owner for damage to original construction, deducted from Contract Sum.

3.8 CLEANING

A. Clean surfaces with manufacturer's recommended cleaning agents or methods.

B. Leave installations clean; premises free from debris, spillage, soiling, residues, stains, and overspray from finished surfaces and adjacent materials. Leave exposed surfaces and joints clean and smooth, free of temporary labels and dirt.

3.9 PROTECTION

A. Take precautions to protect new and existing materials, systems, and finishes from damage during the construction period. Restore items that are damaged during the construction period to like-new condition or provide new products and finishes.

END OF SECTION

THIS PAGE INTENTIONALLY LEFT BLANK

SECTION 024119 - SELECTIVE DEMOLITION

PART 1 - GENERAL

1.1 SUBMITTALS

A. Shop Drawings: Demolition procedures and removal sequence of operations, location of barriers and enclosures, and temporary work and construction facilities.

B. Temporary Shoring Systems: Submit construction drawings for temporary shoring systems, signed and sealed by responsible Professional Engineer licensed in Project jurisdiction.

C. Permits: For transportation and disposal of debris.

D. Project Record Documents: Submit in accordance with Division 01.
   1. During the work, accurately record location of encountered existing utilities, capped utilities, subsurface conditions and obstructions, and construction remaining within demolition area.

1.2 QUALITY ASSURANCE

A. Maintain watertight integrity as needed to protected construction to remain from structural and environmental damage.

B. Use of Explosives: Not permitted.

C. Hazardous Materials: Not anticipated. In the event hazardous materials are discovered, immediately notify Architect and Owner. Removal will be under a separate contract.

1.3 QUALIFICATIONS

A. Demolition: Minimum 3 years documented experience in sequential demolition procedures limiting damage to only those portions of structures requiring demolition.

PART 2 - PRODUCTS

2.1 SALVAGE AND CONSTRUCTION WASTE MANAGEMENT

A. Remove items for Owner's use as shown on Drawings, and as directed by Owner or Architect, to on-site location acceptable to Owner.

B. Remaining unused demolition from building and site is Contractor's property. Remove from site and dispose of in legal manner.

C. Remove unused site stored salvaged material prior to Substantial Completion of Project, except where otherwise directed by Owner or Architect.

2.2 REGULATORY REQUIREMENTS

A. Obtain required permits from governing authorities before proceeding. Obtain permits before closing or obstructing roadways, sidewalks, hydrants, and fire lanes.

B. Conform to OSHA requirements for engineering survey before beginning demolition. Update as required throughout progress of demolition.

C. Conform to applicable code, health departments, and local and state agencies for demolition of structures, dust control, runoff control, and disposal of debris.

D. Conform to local governing jurisdiction requirements regarding noise, erosion, and sediment control.

2.3 FILL MATERIALS

A. Conform to provisions indicated by Civil.

PART 3 - EXECUTION

3.1 SELECTIVE BUILDING DEMOLITION

A. Use covered chutes to conduct debris from upper story levels to control discharge of dust and particles.

B. Conduct demolition operations to prevent damage to finished surfaces, items, and construction at portions of building not designated for demolition.

C. Where structure systems appear to be in danger, suspend work in affected area, and promptly notify Architect for direction.

D. Minimize cutting and removal of work to remain.
   1. Cut finished surfaces, such as concrete, masonry, and plaster, by methods to terminate surfaces in straight line at natural point of division. Do not over-cut.
   2. Leave smooth edges at finished surfaces.

E. Remove items by hand as far as possible. Obtain written approval for use of power-driven equipment.

F. Cut concrete slabs to maximum 3 inch deep, leaving minimum 1 inch remaining, before breaking up to prevent cutting of underslab conduit, pipe, and other utilities.

G. Remove abandoned items and extraneous material such as abandoned pipe, conduit, clips, fasteners, and fabrications, except where fully concealed. Cap, seal, or plug abandoned work. Remove to the extent required to allow concealment behind finish materials.

H. Remove and legally dispose of roofing materials as re-roofing work and new flashing proceeds.
   1. Maintain watertight integrity of building during roofing demolition and re-roofing work.
   2. Remove only as much roofing and flashing as can be re-installed or temporarily waterproofed during same day.

I. Where equipment or fixtures are indicated to be removed, remove related supports, hangers, piping, wiring, ducts, controls, insulation, and other related items that serve no useful purpose, unless noted otherwise.

J. Reinstall or support mechanical equipment, piping and ductwork, etc., affected by removal or new work that is required to remain in service, as specified for new Work and as accepted by Architect and Owner.

K. Where existing ductwork, piping, conduits or similar obstructions interfere with the Work, remove, rearrange or relocate items as required, as accepted by Architect and Owner.

L. See Drawings for specific demolition items.

3.2 SELECTIVE SITEWORK DEMOLITION

A. Break up and remove paved areas, subsurface foundations, footings, rockery, and other site construction within demolition area.

B. Remove concrete slabs by saw cutting to make straight and even construction joints and junctures between demolished construction and construction to remain.

C. Remove site construction including subsurface foundations and footings.

D. See Drawings for specific demolition items.

3.3 SELECTIVE UTILITIES DEMOLITION

A. Before beginning work, notify utility companies to arrange cut off of services and conform to their requirements.
   1. Do not shut off or cap utilities without prior notice to utility companies and to Owner.
   2. Do not shut off utilities to Owner occupied on-site facilities.

B. Disconnect, remove, cap, and identify designated utility lines within demolition area. Remove meters.

C. Leave active plumbing and electrical conduit in demolition areas, except where designated for removal.

D. Cap and tag cut lines remaining in place with identifying labels. Show locations on Project Record Documents.

E. Where unknown utility lines are encountered, arrange with utility companies for identification. Determine whether line is in use or is abandoned. Notify Owner and Architect.
   1. Do not cut or otherwise damage unknown utility lines.
   2. Where unknown utility lines are cut or damaged without authorization, compensate Owner and utility companies for damage, deducted from Contract Sum.

F. See Drawings for specific demolition items.

3.4 REMOVAL AND DISPOSAL

A. Remove demolished materials, debris, demolition aids, equipment, unused salvage, and stockpiled items such as topsoil from site.

B. Legally dispose of demolition material prior to Substantial Completion of Project.

C. Maintain hauling routes clean and free from demolition work.

D. Do not store, burn, or bury materials on site.

E. Do not crush concrete materials on site

3.5 MAINTENANCE

A. Maintain protective fencing, barriers, weatherproofing, security measures, and other in-place measures during and following demolition work to prevent damage to existing construction, vegetation, and finishes designated to remain.

B. Leave structural support systems in place as required for maintenance of structural stability of structures to remain.

C. Leave in place barriers and opening protection as necessary to reduce life safety hazards.

D. Maintain weatherproof barriers as necessary to maintain areas of existing buildings dry during course of selective demolition and construction.
   1. Prevent water intrusion by providing temporary or permanent waterproofing.
   2. Direct water flow to exterior of building.

END OF SECTION

THIS PAGE INTENTIONALLY LEFT BLANK

SECTION 031000 - CONCRETE FORMING AND ACCESSORIES

PART 1 - GENERAL

1.1 SUBMITTALS

A. Formwork Drawings: Seal and sign by professional engineer licensed in Project location.
   1. Show openings, form joints, control joints, expansion joints, reveal joints, form tie locations, bracing, temporary supports, and concrete embedments.
   2. Show sizes, types, and locations of piping, conduit, connectors, and other accessories.
   3. Vertical and Horizontal Special Loads: Conform to ACI 347. Include camber diagrams.
   4. Architectural Concrete at exposed finished surfaces including means to prevent leakage of concrete from forms. Indicate forming materials proposed for Architectural Finish.

B. Product Data: Product descriptions, specifications, and manufacturer instructions for proprietary materials, including, form release agents, form liners, formwork systems, form ties, and other products specified for use with formwork.

C. Construction and Contraction Joints: Show location proposed where different than those indicated by Contract Documents.

D. Testing for Formwork Removal: Data on method for determining strength of concrete prior to removal of formwork when methods other than field-cured cylinders are proposed.

E. Formwork Removal Plans: Data on plans for formwork removal operations when removal of forms at concrete strength lower than that specified is proposed.

1.2 QUALITY ASSURANCE

A. Design formwork, shoring, and reshoring under direct supervision of professional engineer experienced in formwork design and licensed in Project location.

B. Reuse of Forms: Obtain acceptance from Owner's Special Inspector prior to reuse.
   1. Remove projecting nails and other objects from contact surface, clean, and recondition.
   2. Discard forms with patches and repairs that may affect appearance of finished concrete surfaces.
   3. Refer to additional requirements specified by this Section for HDO forms anticipated for Architectural Concrete.

PART 2 - PRODUCTS

2.1 REGULATORY REQUIREMENTS:

A. Special Inspections: Conform to requirements of Special Inspections as specified and as indicated on Drawings, and IBC Chapter 17 for structural tests and inspections.

2.2 DESIGN CRITERIA

A. Formwork Design, Structural Stability, and Sufficiency: Conform to IBC Section 1906, ACI 318 Chapter 6, and ACI 347.

B. Design, engineer, and construct formwork, shoring, reshoring, and bracing to withstand:
   1. Construction loads, continuous loads, and lateral pressure.
   2. Pressure resulting from placement and vibration, while maintaining specified tolerances.
   3. Special vertical and horizontal loads, conforming to ACI 347 Section 2.2.
   4. Maximum L/180 deflection of formwork between formwork framing at exposed-to-view concrete surfaces.

2.3 PERFORMANCE CRITERIA

A. Construction Joints: Locate and form so as to least impair strength of concrete. Verify locations with Architect for visually exposed concrete.

B. Except as otherwise shown or accepted, locate within middle third of spans of slabs, beams, and girders

C. Where beams intersect girders, offset joint in girder from beam at distance of not less than two times beam width.

D. Locate joints in walls and columns at underside of floors, slabs, beams, and girders and at tops of footings and floor slabs.

E. Make joints perpendicular to main reinforcement.
   1. Provide keyways as indicated by Contract Documents.
   2. Exposed to View Concrete: Conform to ACI 301 Chapter 6 and ACI 347 for Architectural Concrete, except non-public utility areas.

2.4 WOOD FORMS

A. General:
   1. As required to achieve smooth, uniform texture of concrete surface.
   2. Forms with raised grain, torn surfaces, worn edges, patches, dents, and other defects are not accepted.

B. Exterior and Interior Concealed Work: APA, PS-1 B-B Plyform Structural I, Exterior, 4 by 8 foot panels, minimum 5/8 inch thick.

C. Exterior and Interior Exposed Work: APA, PS-1 High Density Overlay (HDO) Plyform, Structural I & II, Exterior, High Density 60-60 surfacing material APA PS1 and Form V345,4 foot by 8 foot panels, minimum 3/4 inch thick and as sufficient to support concrete at rate poured.

2.5 FIBERGLASS FORMS

A. Matched, tight fitting, stiffened to support weight of concrete without deflection detrimental to tolerances and appearance of finished concrete, as accepted by Architect.

2.6 EARTH FORMS

A. Not acceptable unless as specified under Field Conditions in this Section, and as indicated by Structural.

2.7 METAL FORMWORK PANELIZED FRAMEWORK

A. Steel structural panelized forming system, including panelized forms, ties, clamps, brackets, and other accessories to structurally support, brace, contain placed concrete is accepted in lieu of standard formwork systems.

2.8 FORM TIES

A. Snap Ties:
   1. 1 inch diameter by 1 inch deep snap-tie with flattened break-offs and plastic cone.
   2. High strength, non-corrosive, non-staining finish.
   3. One inch minimum break-back below concrete surface.
   4. Wire snap-ties strength and length as required for conditions of installation.
   5. Water seals to inhibit flow of water along tie shaft and to block against leakage.
   6. Install in pattern approved by architect.

B. Concrete Plugs:
   1. Reveal Type: At exposed Architectural Concrete.
   2. Flush Type: At concealed concrete.
   3. Plug Adhesive: As instructed by manufacturer.

C. Flush Filling and Sacking of Cone Holes: Filling cone holes with stiff sand/cement mix to achieve Architectural Concrete surface is accepted in lieu of plugs.

2.9 EMBEDDED ITEMS AND INSERTS

A. Anchor Bolts: ASTM F1554, except as otherwise shown on Structural Drawings. At exterior locations hot-dip galvanized to ASTM A153, Class C. Refer to Structural Drawings for anchor bolt diameters, spacing, embedment, and other requirements.

B. Embedded conduit: Conform to Division 26 - Electrical.

C. Inserts, Frames, and Sleeves:
   1. Heavy gauge ferrous metal, hot dipped galvanized to ASTM A153, Class B.
   2. Size and shapes as required to suit conditions.

D. Aluminum embedded items not accepted.

2.10 ACCESSORIES

A. Form Release Agent: Commercial mineral oil or vegetable oil release formulation that will not stain, bond to, or adversely affect concrete surfaces or coating. Petroleum based products not accepted.
   1. Cresset Chemicals, Crete-Lease, 880-VOC-Xtra Release Agent.
   2. Dayton Superior, Econo Strip (J-1 EF).
   3. US SPEC.
      a. Springkote, vegetable oil release agent.
      b. Ezkote Green, multi-use, non-petroleum, reactive form release.

B. Exterior Control Joints: Superior Profiles, ZipStrip, plastic joint former, Size as required for embedment of 1/4 slab thickness, or Architect-approved equal.

C. Expansion Joint Caps: WR Meadows, Sealtight Snap-Cap, removable joint caps over top of asphaltic joint sealers to provide1/2 inch maximum recessed joint for application of horizontal joint sealants, or Architect-approved equal.
   1. Removable, form extruded, high impact polystyrene expansion joint cap
   2. Minimum 1/2 inch deep by minimum 1/2 inch wide and as applicable at wider joints.
   3. Design to prevent joint filler from bonding to joint sealant.

D. Expansion Joint Filler: Conforming to ASTM D994 ASTM D1751, or ASTM D1752. WR Meadows, Sealtight Fiber Expansion Joint, or Architect-approved equal.
   1. Standard pre-molded bituminous impregnated fiber.
   2. Approximately 1/2 inch thick.

E. Construction Joints: Include accessories for installation in conformance to manufacturer's requirements.

F. Moving Joints: Ribbed with hollow center bulb, 6 inch or 9 inch wide to suit condition.
   1. Non-Moving Joints: Ribbed, flat, 6 inch or 9 inch wide to suit condition.
   2. Factory or field splice for continuous lengths as instructed by manufacturer.

G. Chamfer Strips: Pre-molded plastic chamfer Strips.
   1. 3/4 inch by 3/4 inch leg dimensions.
   2. 1-1/16 inch dimension across diagonal face.

H. Vinyl Foam Tape for Butt Joints at Architectural Concrete: Closed cell PVC foam with pressure sensitive adhesive on one side.

I. Sanded Silicone Sealant and Backer Rod: For sealing joints at Architectural Concrete, and as specified in Section 079200.

J. In-Form Surface Retarder (Site Walls): Grace Construction Products, PIERI Euro-Tard. Verify application and with manufacturer's technical product representative.
   1. Concrete Finish: Exposed aggregate finish of form cast architectural concrete.
      a. »Determine from 11 depths of etch available from manufacturer with each coating color and number coded for uniform results.
      b. Verify depth of etch during mockup specified for Section 033000.
   2. Application: Airless spray or roll single coat or 2 light coats (4-6 mils) to formwork at 250-350 square foot per gallon depending on finish and etch required as determined from mockup.

3. Drying Time: Minimum 20 minutes prior to concrete placement.
4. Removal: Upon removal of formwork, promptly wash down and remove surface retarder and retarded concrete using high pressure water application.

PART 3 - EXECUTION

3.1 INSTALLATION OF FORMWORK

A. Conform to IBC Section 1906, ACI 318 Chapter 6 and ACI 347R.

B. Construct formwork to maintain specified tolerances and tolerance limits of ACI 117. Limit abrupt irregularities to offsets and fins at formed joints. Gradual irregularities include warping and planar variations, as measured by a 5-foot straightedge.
   1. Class A, 1/8 inch: Where exposed to view unless otherwise indicated.

C. Construct forms tight enough to prevent loss of concrete mortar.
   1. Minimize joints.
   2. Exposed Concrete: Symmetrically align joints in forms.

D. Accurately construct and brace formwork to hold firmly and unyielding against hardened concrete and other construction, to prevent loss of cement, and to maintain surface tolerances.
   1. At construction joints, overlap forms minimum 1 inch over previously place concrete.
   2. Shore or strengthen formwork subject to over-stressing by concrete loads.
   3. Do not reshore, prior to acceptance by Structural Engineer.

E. Provide positive means of adjustment (wedges or jacks) for shores and struts.
   1. Adjust formwork prior to concrete placement.
   2. Fasten form wedges in place following final form adjustments.
   3. Securely brace formwork against lateral deflection and lateral instability.
   4. Compensate for anticipated deflections.

F. Camber formwork for anticipated deflection due to weight, pressure of fresh concrete, and for structural cambers as shown on Drawings.
   1. Accurately set formwork and intermediate screed strips for slabs to produce designated elevations and contours of finished surfaces.
   2. Verify that edge forms and screed strips are sufficiently strong to support vibration screeds and roller pipe screeds, when specified finish requires use of such equipment.
   3. Camber screeds to maintain uniform concrete thickness.

G. Erect formwork, shoring, and reshoring to allow removal at wall openings to counteract damage caused by swelling of wood forms and without disturbing adjacent shoring and formwork.

H. Set form boards and plywood horizontally for smooth surface concrete.

I. Shim forms as required to assure flush form joints on finished surfaces.

J. Keep forms moist prior to pour to prevent shrinkage and warping.

K. Locate studs and joists at 12 inch on center maximum spacing.

L. Locate horizontal form walers at 24 inch on center maximum spacing.

M. Install form ties at walls symmetrically in tiers and rows with each tier plumb from top to bottom and each row level.

N. Provide fillets and minimum 3/4 chamfer strips at external corners and edges of exposed concrete, except at flush joints. Do not bevel re-entrant corners, except as indicated by Contract Documents.

O. Reuse of HDO plywood form boards are accepted under condition that finish concrete surfaces are of equivalent quality as that obtained by new forms.
   1. Remove damaged edges.
   2. Repair face imperfections.
   3. Fill and patch holes.

4. Clean forms of contaminants.
5. Coat and seal edges of forms.
6. Coat forms with form release agent.

P. Install proprietary formwork or metal forms using manufacturer's accessories as instructed for smooth even finished concrete surface, free of fins and burrs.

3.2 RETIGHTENING FORMS

A. Exposed Architectural Concrete Construction Joints: Install row of adjustable spreaders approximately 2 inch above joints. Retighten just before making succeeding pour.

3.3 APPLICATION OF FORM RELEASE AGENT

A. Apply form release agent in conformance to manufacturer's instructions.

B. Coat form contact surfaces with form release agent before placing reinforcement, embeds, and anchors.

C. Apply thin coatings of form release agent at exposed concrete surfaces. Do not over-apply.

D. Do not allow excess form coating material to accumulate in forms or to come into contact with reinforcement and other embedded items

E. Prevent dust, dirt, and other substances that may stain concrete from contaminating forms after coating is applied. Clean and recoat as necessary to maintain clean formwork.

F. Do not coat formwork with form release agent at surfaces receiving finish coatings that may be adversely affected by form release agent.
1. Soak contact surfaces of untreated form panels with clean water.
2. Maintain wet surfaces during concrete placement.

3.4 INSERTS AND EMBEDDED ITEMS, AND OPENINGS

A. Inserts, Sleeves, Conduit and other Embedded Items: Conform to ACI 318 Chapter 6 and ACI 347.

B. Coordinate with work of other Sections in forming and placing slots, reglets, recesses, sleeves, bolts, anchors, and other components and inserts.

C. Provide openings required for other trades, including plumbing, mechanical, and electrical work.

D. Obtain approval before framing openings not shown on Structural Drawings.

E. Install accessories straight, level, true, and plumb and in conformance to manufacturer's instructions. Make provisions so that items are not disturbed during concrete placement.

3.5 CLEAN-OUTS

A. Provide temporary openings in forms to facilitate cleaning and inspections before concrete placement.
1. Locate at bottom of forms to allow flushing water to drain.
2. Construct so that cleanout locations will not be apparent at Architectural Concrete surfaces.
3. Clean and inspect immediately prior to concrete placement.

3.6 JOINTS AND STOPPAGES

A. Align joints, and tighten to make watertight. Keep form joints to a minimum.

B. Joints at Architectural Concrete:
1. Apply 1/8 inch thick foam tape, recessed 1/8 inch below exposed surface.
2. Butt joints for smooth snug joint.
3. Seal recessed joint with clear silicone sealant.
4. Wipe off excess making clean smooth surface.
5. Space vertical joints in walls as indicated on Drawings.

a. Locate joints beside piers integral with walls, near corners, and in concealed locations where possible.

C. Exterior Control Joints: Saw cut joints specified in Section 033000 are accepted for slabs on grade, or utilize plastic joint former.

D. Interior Control Joints at Exposed Concrete Slabs: Hand tool under work of Section 033000.

E. Expansion Joints: Build into forms. Locate where required and where indicated.

3.7 FORM CLEANING

A. Clean forms as erection proceeds to remove foreign matter within forms.

B. Clean forms of debris before placing concrete.

C. Flush with water or use compressed air to remove remaining foreign matter. Ensure that water and debris drain to exterior through clean-outs.

D. During freezing weather conditions, remove ice and snow from within forms with compressed air or other mechanical means. Do not use de-icing salts or water.

3.8 FORMWORK TOLERANCES

A. Conform to ACI 117 to achieve tolerances specified by Section 033000.

B. Formwork Surface Irregularities: Conform to ACI 117 Class of Surface for abrupt offsets between adjacent pieces of formwork and gradual surface warping and deviation from surface plane. Do not exceed following:
1. Architectural Exposed Surfaces: Class A, 1/8 inch.
2. Exposed Surfaces not designated as Architectural Exposed: Class C, 1/2 inch.
3. Concealed Surfaces: Class D, 1 inch.

3.9 REMOVING FORMS

A. Remove forms except where specifically indicated to remain. Provide adequate access for removal. Reuse forms only with Architect's approval.

3.10 SHORES AND SUPPORTS

A. Conform to ACI 347R for shoring and backshoring in multistory construction.

B. Locate and provide reshoring to support work and to prevent excessive stress and deflection.
1. Do not place construction loads on newly placed concrete prior to and until reshoring and backshoring is securely in place.
2. Do not allow loading of combined dead and live loads at concrete beams, slabs, columns, and other structural members in excess of design loads for specified concrete compressive strength indicated by Construction Documents.

C. Where floors support shores under newly placed concrete, either leave original shoring in place or install reshores and backshores so that loads from construction above transfers directly to shoring below.
1. Locate reshores and backshores directly under a shore position.
2. Space shoring in stories below to prevent excessive loading and tensile stress in concrete.
3. Extend shores to distribute loads of newly placed concrete, forms, and construction live loads, not exceeding design loads of floors supporting shores, reshores, and backshores.

D. Place reshores and backshores in sequence with stripping operations.

E. Tighten reshores and backshores to carry and distribute loads without overstressing concrete members.

F. Remove shores and reshores in planned sequence to avoid damaging partially cured concrete.

G. Keep reshores in place minimum 15 days after placing upper tier and as required for concrete to attain 28 day strength.

3.11 REMOVING FORMWORK

A. Conform to IBC Section 1906 and ACI 318 Chapter 6, and ACI 347R.

B. Do not remove forms and shoring until concrete has cured sufficiently to support its own weight and superimposed loads. Determine compressive strength of in-place concrete by testing representative field-cured specimens.

C. Vertical Formwork not Supporting Weight of Concrete: Removal is allowed 24 hours following concrete placement, provided concrete of sufficient hardness to not incur damage and protection measures are in place.

D. Formwork Supporting Weight of Concrete:
   1. Leave in place at least 7 days following concrete placement and until attainment of concrete design compressive strength, or until sufficient prestressing has been applied to carry dead loads and construction loads.
   2. Reshoring is permitted after concrete has been in place for at least 3 days and has reached 75 percent of required design compressive strength, provided that concrete does not remain unsupported for more than 4 hours.

E. Removal of Formwork, Reshores, and Backshores Based upon Concrete Attaining Specified Compressive Strength:
   1. Compressive strength is presumed to be attained when field cure test cylinders under same conditions as concrete represented have reached design compressive strengths specified for removal.
   2. Mold cylinders, conforming to ASTM C31.
   3. Test cylinders, conforming to ASTM C39.

F. Alternative Methods for Evaluating Concrete Strength for Formwork Removal: Submit sufficient correlating data on proposed alternative method for determining strength, using project materials, to demonstrate correlation of measurements of in-place concrete with compressive strength of laboratory-cured molded cylinders of drilled cores.
   1. Tests of cast-in -place cylinder conforming to ASTM C873 (limited to concrete slabs of 5 to 12 inch thick).
   2. Penetration resistance, conforming to ASTM C803.
   3. Pullout strength, conforming to ASTM C900.
   4. Acceptable maturity-factor procedure, conforming to ASTM C1074.

G. Architectural Concrete:
   1. Remove formwork from Architectural Concrete in same sequence as concrete placement to achieve similar concrete surface coloration.
   2. Remove in manner and sequence to prevent damage to concrete surfaces.

H. Wood Forms for Wall Openings: Loosen as soon as possible without damaging concrete surface.

3.12 FINISHING AND REPAIRS OF FORMED SURFACES

A. Finish and repair formed concrete surfaces in conformance to Section 033000.

END OF SECTION

THIS PAGE INTENTIONALLY LEFT BLANK

SECTION 032000 - CONCRETE REINFORCING

PART 1 - GENERAL

1.1 SUBMITTALS

A. Shop Placement Drawings: Prepare in conformance with IBC Chapter 19, ACI 318 Chapter 7, and ACI 315.
   1. Prepare in sufficient detail to resolve reinforcement intersections.
   2. Show sizes, spacing, locations, quantities, bending and cutting schedules, bending and placing diagrams, stirrup spacing, and supporting and spacing devices.
   3. Prepare placement details for specific reinforcing intersections and clearances conditions not shown on Structural Drawings.

B. Manufacturer's Certificate: Mill test report of physical and chemical analysis for ASTM A615 and ASTM A706 reinforcing steel. Certify that products meet or exceed structural and specification requirements.

C. Test Reports: ICC Evaluation Services Report for mechanical splices (couplers) showing compliance to specified requirements.

PART 2 - PRODUCTS

2.1 MANUFACTURER

A. Approved Substitutions: Conform to provisions of Section 012500.

2.2 REGULATORY REQUIREMENTS

A. Conform to requirements of referenced Codes, ordinances, and other regulatory requirements.

B. Special Inspections: Conform to requirements of IBC Chapter 17 - Structural Tests and Special Inspections and Section 014533.

C. Reinforcing Steel: Conform to provisions of IBC Chapter 19, ACI 318, ACI 301, and CRSI Manual of Standard Practice.

2.3 PERFORMANCE / DESIGN CRITERIA

A. Supply reinforcing steel in predetermined sizes and bends to eliminate field alterations. Do not make alterations to shop formed steel without prior acceptance for each instance by Architect/Structural Engineer.

B. Reinforcing Steel: Conform to provisions of ACI 318, ACI 301, and CRSI Manual of Standard Practice.

2.4 REINFORCEMENT

A. Type, Size and Location: In accordance with Structural Notes and Drawings.

B. Reinforcing Steel: Deformed bar, free from rust, dirt, and loose scale, uncoated. Factory mark with size and grade.
   1. Billet-Steel Reinforcing Bar: ASTM A615, Grade 60 (60 ksi yield strength)..
   2. Low Alloy Steel Reinforcing Bar to be Welded: ASTM A706, Grade 60 (60 ksi yield strength). Supply where reinforcing steel is to be welded.

2.5 FABRICATION

A. Fabricate concrete reinforcement in accordance with CRSI Manual of Practice and ACI 318.
   1. Bend and straighten reinforcing steel in accordance to ACI 318 Chapter 7, except as otherwise shown on Structural Drawings.
   2. Do not bend or straighten reinforcing steel that is partially embedded in concrete.
   3. No heating of reinforcing steel is acceptable, unless allowed in writing by Architect/Structural Engineer for entire operation.

B. Reinforcing Bars Bend Dimensions and Fabrication Tolerances: Conform to IBC Chapter 19 and ACI 318, except as otherwise shown on Structural Drawings.

C. Welding: Do not weld or tack weld reinforcing bars, except as specifically shown on Contract Documents.
   1. Where indicated or accepted, conform to AWS D1.4 using AWS/WABO Certified Welders, E9018 electrodes or as accepted by Architect/Structural Engineer. Conform to additional provisions of Section 050560.

D. Splicing: Provide tension lap splices, except mechanical splices as shown on Drawings.

2.6 ACCESSORIES

A. Mechanical Splices:
   1. Listed by ICC Evaluation Services Evaluation Report or Legacy Report.
   2. Conform to ACI 318 Section 12.14.3 and ACI 318 Section 21.2.6, as modified by IBC Chapter 19, and as specified or shown on Structural Drawings.
   3. Type 1 Splice: Develop minimum 125 percent of specified yield strength (fy) of rebar as required for tension or compression.
   4. Type 2 Splice: Develop 100 percent of the specified tensile strength, (fu) of rebar, and 125 percent of the specified yield strength, fy, of rebar.
   5. Tie Wire: No. 16 gage or heavier double annealed iron wire.

B. Chairs, Bolsters, Bar Supports, Spacers:
   1. Detail in conformance to ACI Detailing Manual SP-66 and CRSI Bar Support Classifications.
   2. Design sizes and shapes as required to maintain strength and support of reinforcement during placement of concrete.
   3. Include load bearing pads to prevent vapor retarder puncture.

C. Special Chairs, Bolsters, Bar Supports, and Spacers Adjacent to Weather-Exposed Concrete Surfaces: Plastic-coated steel or stainless steel type; size, and shape as required for Project conditions.

PART 3 - EXECUTION

3.1 INSTALLATION

A. Placement of Reinforcing Steel and Tolerances: Conform to IBC Chapter 19 and referenced ACI 318, and ACI 117.

B. Details of Placement and Support of Reinforcing Steel: Conform to ACI SP-66 and CRSI recommendations, as shown on accepted placement drawing submittals.

C. Displacement of Reinforcing: Where displaced, shifted, or moved to locations exceeding allowable tolerances, prior to placing concrete:
   1. Provide 48 hours notice to Architect/Structural Engineer.
   2. Obtain acceptance for resulting arrangement.

D. Joints: Place reinforcement through expansion joints and as specified or shown on Drawings through construction and contraction joints.

E. Allowable Cover over Reinforcement: Conform to IBC Chapter 19 and as shown on Structural Drawings. Where not shown, provide minimum 3 inch cover.

F. Tie Wires: Bend or turn as necessary to prevent exposure of wires through concrete placement.

G. Welded Wire Fabric:
   1. Place continuously where shown in slabs between control and expansion joints.
   2. Do not carry through expansion joints.
   3. Cut 1/2 of fabric through control joints, except as otherwise shown on Drawings
   4. Extend across beams and walls.
   5. Lap fabric minimum 8 inch on sides and ends.

H. Dowels:

1. Install at right angle to joint being doweled.
2. Accurately align dowels parallel to finished concrete surface.
3. Rigidly support during concrete placement using dowel baskets.
4. Coat one end of dowel with bond breaker.

I. Lapped Bars: Place in contact and tie securely, or space transversely apart to embed entire surface of bar into concrete. Do not space lapped bars more than 1/5th required length of lap and no more than 6 inch apart.

J. Splices: Conform to ACI 318 as modified by IBC Chapter 19 and Structural Drawings.
1. Lap Splices: Do not lap splice reinforcing bars larger than No. 11, except as otherwise accepted by Architect/Structural Engineer.
2. Mechanical Splices: Conform to manufacturer instructions and ICC Evaluation Services Report.

K. Vapor Barrier: Do not puncture or displace. Do not use grade stakes or other accessories that may puncture vapor barrier.

3.2 FORMED OPENINGS: PLACE REINFORCING TO ACCOMMODATE OPENINGS AND PENETRATIONS.

A. Soil at Footings: Maintain firm and compacted during placement of reinforcing steel.

B. Do not drive nails in forms for supporting steel.

C. Stubs and Other Projecting Bars: Place and secure before pouring.

D. Field Bending Reinforcing Steel: Not permitted, except as accepted by Architect/Structural Engineer.

E. Torch Cutting: Do not use gas cutting torches in field for correcting fabrication errors in reinforcing steel, except as accepted by Architect/Structural Engineer.

F. Reinforcing Conflict with Other Construction: Notify Architect prior to placing concrete. Includes in conflict with conduit, piping, inserts, and sleeves

G. Field Welding of Reinforcement: Not permitted, except as indicated by Structural Notes and Drawings, or approved. No welding at bend in bar or at cross bars.

3.3 FIELD QUALITY CONTROL

A. Conform to independent inspections specified in Section 014000 and indicated on Structural Drawings.

B. Inspect for acceptability before beginning concrete work of Related Sections.

END OF SECTION

THIS PAGE INTENTIONALLY LEFT BLANK

SECTION 033000 - CAST-IN-PLACE CONCRETE

PART 1 - GENERAL

1.1 SUBMITTALS

A. Shop Drawings: Plan drawings showing locations of isolation joints, contraction (control) joints, and construction joints for slab-on-grade concrete.

B. Mix Designs: Sign by batch plant quality control engineer or responsible agent for each design. Include for each mix design:
   1. Method and test data used to establish mix proportions.
      a. Include supporting test records for field experience method or trial batch method for each mix design.
      b. Include date of test and batch plant location.
   2. Concrete compressive strengths.
   3. Water/cement ratios with corresponding cement content and water content.
   4. Linear shrinkage. Mix designs with no test data may substitute shrinkage reducing admixture in proportions conforming to manufacturer's instructions.
   5. Aggregates, including types, pit or quarry locations, producer names, grading, specific gravities, certification, and evidence of conformance to this specification.
      a. Base aggregate weights on saturated surface dry conditions.
      b. Include concrete mix gradations of coarse to fine aggregates.
   6. Concrete compressive strength at 7 and 28 day strengths.
   7. Admixtures and additives.
   8. Chloride ion content.
   9. Slump or slump flow.
   10. Hot and cold weather designs.
   11. Air entrainment at exterior slabs.
   12. Ingredients, proportions, and source of materials.
   13. Locations and intended use.

C. Product Data: Submit manufacturer's printed data and instructions for proprietary products and equipment, including for:
   1. Admixtures and additives.
   2. Bonding agents.
   3. Screeding products and equipment.
   4. Hardener densifiers.
   5. Curing materials.
   6. Contraction joints, isolation joints, construction joints, and cold joints.

D. Concrete Placement Procedures: Written procedures and drawings describing work, including for.
   1. Saw cutting of contraction joints and construction joints.
   2. Concrete curing methods and products.
   3. Repair methods including repair product data, preparation, and application, including for crack repair and patching.

E. Certification by Concrete Producer: Written and signed by batch plant quality control engineer or responsible agent certifying that mix design conforms to provisions of this Section and that ingredients for each mix design are compatible.
   1. Cement type.
   2. Fly ash or slag types.
   3. Source of water supply.

F. Samples: Joint filler materials.

1.2 QUALITY ASSURANCE

A. Exposed Concrete: Conform to ACI 301, Section 6 and ACI 303R for Architectural Concrete at exposed-to-view surfaces.

B. Concrete Producer Qualifications:
   1. Company specializing in manufacturing ready-mixed concrete products conforming to ASTM C94.
   2. Producer Member of the National Ready Mixed Concrete Association (NRMCA).

C. Installer Qualifications:
   1. Company specializing in work of this Section.
   2. Able to show minimum 3 year documented experience in successful commercial quality work of comparable scope and quality when requested by Architect.

D. Applicators for Semi-Rigid Epoxy and Polyurea Joint Sealers and Elastomeric Joint Sealants and Other Specialized Systems: Trained and authorized by manufacturer as qualified prior to Bid Date.

1.3 WARRANTIES

A. Waterproof Concrete: Manufacturer's standard minimum 10 year waterproofing and repair Warranty to repair leakage through epoxy injection or other means as accepted by Architect.

PART 2 - PRODUCTS

2.1 MANUFACTURERS

A. Approved Substitutions: Conform to provisions of Section 012500.

2.2 REGULATORY REQUIREMENTS

A. Testing and Special Inspections: Conduct testing under provisions of Section 014533.
   1. Conform to provisions of IBC Chapter 17, reference standards specified by ACI 318, and procedures specified by ACI 301.
   2. Conform to ASTM C31, ASTM C39, and ASTM C143, and as specified Section 014533 for placement of concrete with specified 28 day strength greater than 2500 psi.

B. Batch Tickets: Retain record of concrete delivered and placed on site.
   1. Include exact mix proportions, slumps, test strength, date, time, location of placement, weather conditions at time of placement, and source of concrete.
   2. Submit copies to Architect/Structural Engineer, Special Inspector, and Building Code Official.

2.3 PERFORMANCE / DESIGN CRITERIA

A. Do not change brands and sources of cement, aggregates, admixtures, and additives during course of construction, except as accepted by Architect.

B. Supply mix design from same batch plant, using same source for mix ingredients, as submitted for supporting test data.

C. Performance Mix Design:
   1. As basis for acceptance, submit new mix design from batch plant indicating that shrinkage, cracking, strength, and other properties are compatible with original mix design.
   2. Prepare mix design for each type and strength of concrete by either laboratory trial batch, verified by independent testing laboratory, or field experience methods as prescribed by ACI 301.
   3. Prepare mix design information for concrete batch weights with bulk-specific gravity determinations for aggregates based on saturated surface dry (SSD) condition. Include mix information sufficient to verify through absolute volume calculations:
      a. Concrete Yield.
      b. Cement Factor.
      c. Water/Cement Ratio.
      d. Mortar to Voids Ratio.

4. When adjustment to mix design becomes necessary due to job conditions, weather, test results, changes in material properties, or other circumstances, resubmit new mix design for acceptance by Architect/Structural Engineer.

D. Proportioning and Mixing: Conform to requirements of IBC, including Chapter 19.

E. Design Strength:
1. Interior Concrete Slabs: As shown on Drawings by General Structural Notes.
2. Exterior Site Work Concrete: As indicated on General Structural Notes.
3. Building Structural Concrete Other Than Slabs: As indicated General Structural Notes.

F. Water/Cement Ratio for Interior Slabs: 0.40 to 0.44, based on total cementitious material, including slag, fly ash and other pozzolanic materials.
1. Water Content for Slabs: Maximum 270 pounds per cubic yard.
2. Slabs Requiring Lower W/C Ratio: Treat with surface evaporation retarder immediately following concrete setup.
3. Building Structural Concrete Other than Slabs: As indicated by Structural.
4. Exterior Site Work Concrete: Assume 0.42 to 0.5 except as otherwise indicated by Civil or Structural.

G. Length Change: Where no test data is available, add shrinkage reducing admixture, conforming to manufacturer's instructions.
1. Slabs: Maximum 0.035 percent shrinkage in 28 days.
2. Walls, Columns, and Beams: Maximum 0.04 percent shrinkage in 28 days.
3. Footings: No requirements.

H. Superplasticizers: Add high range, mid-range, and low range water-reducing admixtures to batch plant mix as means to develop sufficient slump and workability, as instructed by manufacturer.

I. Air-Entraining Agents at Exterior Concrete:
1. Achieve 5 percent entrained air, plus or minus 1-1/2 percent to batch plant concrete mix, for exterior concrete exposed to earth, weather, or freezing temperatures after curing.
2. Do not add to interior slabs, except as accepted by Architect.

J. Fly Ash and Slag:
1. Add to batch plant concrete mix as Portland cement replacement. Submit back-up data for mix design.
2. Slag and Fly ash content as a percentage of total weight of cementitious material:
   a. Concrete Slabs and Pavements: As indicated.
   b. Other than Slabs: As indicated.

K. Reinforcment: Specified in 032000.

L. Concrete Slump: Optimize through performance mix design by batch plant to suite placement conditions, as accepted for each mix design.

2.4 CONCRETE MATERIALS

A. Portland Cement: ASTM C150.
1. Interior: Type I and Type II. Do not use air-entrained concrete at interior slabs.
2. Exterior: Type I with specified air entrainment admixture, preferred to Type IA and Type IIA air-entrained concrete. Type IIIA accepted for cold weather construction.
3. Other: As specified by Structural Notes.

B. Aggregates:
1. Fine and Coarse Aggregate Grading and Quality: ASTM C33.
2. Coarse Aggregate Class Designation: As indicated by Table 3 for Type or Location of concrete for Moderate Weathering Region, including 5M for exterior Architectural Concrete.
3. Size: Do not exceed 3/4 distance between reinforcing steel or 1/3 thickness of concrete slabs and toppings.
   a. Curbs, Sidewalks, Pavements and Slabs-on-Grade. Maximum 1 inch aggregate.
   b. Slabs and Structural Concrete: Maximum 3/4 inch aggregate.
4. Free of deleterious substances that may cause expansion of concrete or react with alkalis in concrete.

C. Sand: Washed, ASTM C33.

D. Mix Water: Conform and test to ASTM C1602.
   1. Recycled mix water conform to and tested to ASTM C1603 for maximum permitted solids of 50,000 parts per million, or 5 percent, of total mix water.
      a. Wash water from mixer washouts or as part of a concrete mix.
      b. Water collected in a basin as a result of storm water runoff at a concrete production facility, except site water, water from truck exterior, and undocumented water is not permitted to enter containment system.
   2. Clean water free from acids, alkalis, organic material, minerals, salts, and other deleterious materials. Seawater not accepted.

E. Fly Ash: ASTM C618, Class F or Class C Pozzolan, loss on ignition not exceeding 1 percent. Account for lower calcium content of Class F where used.

2.5 CONCRETE ADMIXTURES, ADDITIVES, AGENTS, AND COMPOUNDS

A. Admixtures: Conform to ASTM C494.
   1. Provide products from single manufacture, or supply manufacturer certification that admixtures are compatible in combination with cement and aggregates.
   2. Free of calcium chloride and thiocyanate. Containing no more than 0.05 percent chloride ions.

B. Air-Entraining Agent: ASTM C260 for exterior concrete.
   1. Euclid, Air Mix.
   2. GCP, Daravair 1000.
   3. BASF, AE 90 or Micro Air.
   4. Sika AEA-15.

C. Superplasticizers / Water-reducing Admixtures.
   1. High range water-reducing admixture, ASTM C494, Type F.
      a. Euclid, Eucon 37.
      b. GCP, ADVA 170.
      c. BASF, Glenium 3030 NS.
      d. Sika, Sikament 86
   2. Mid-range water-reducing admixture, ASTM C494, Type A or F.
      a. Euclid, Eucon MR
      b. GCP, Daracem.
      c. BASF, Polyheed 997.
   3. Low range water-reducing admixture, ASTM C494, Type A.
      a. Euclid A+.
      b. GCP, WRDA 64.
      c. BASF, Pozzolith 80 or Pozzolith 200N.
      d. Sika Plastocrete 161.

D. Shrinkage Reducing Admixture (SRA): As tested to ASTM C157 and conforming to accepted test data for linear shrinkage as instructed by manufacturer.
   1. GCP, Eclipse Floor 200, except Eclipse 4500 for exterior slabs.
   2. BASF, Tetraguard AS20 and Tetraguard PW.

E. Integral Water-Repellent Admixture: Non-chloride formula system of hydrophobic components and surface active agents, making pores and pore linings resistant to water absorption and capillary action, inhibiting water intrusion and vapor transmission through hardened concrete, tested ASTM C642.
   1. Euclid, Integral Waterpeller.
   2. BASF, Rheomix 235.
   3. GCP, Darapel.

2.6 BONDING AGENTS

A. Epoxy Bonding Agent: Suitable for all applications.
   1. BASF Concresive Liquid LPL.

2. WR Meadows, Intralock.
3. US MIX, US SPEC Maxi-bond 2500.

B. Acrylic None Re-Emulsifiable Bonding Agents: ASTM C1059 Type II and ASTM C1042 Type II. Designed to bond permanently to new concrete and Portland cement sand mixes to horizontal and vertical in-place concrete at interior and exterior conditions.
1. Dayton Superior, Day-Chem AD Bond.
2. Edoco Burke, Acrylic Bondcrete.
3. Euclid, Flex-Con.
4. GCP, Daraweld C.
5. L&M Construction Chemicals, Inc, Everbond.
6. Larsen Products Corp., Weldcrete.
7. US MIX, US SPEC Acrylcoat.

C. Polyvinyl Acetate (PVA) Re-Emulsifiable/Re-Wettable Bonding Agents: ASTM C1042 Type I. Designed to bond to concrete not receiving subsequent moisture exposure and there will be a delay between bonding agent application and subsequent topping or coating system.
1. Dayton Superior, Superior Concrete Bonder (J-41), specified for type and quality.

2.7 BELOW-SLAB VAPOR RETARDER

A. Specified in Section 072616.

2.8 SHEET MEMBRANE CURING MATERIALS

A. Accepted Curing Methods:
1. ACI 302.1R using wet curing, wet covering, moisture retaining coverings, or polyethylene film or waterproof paper curing methods, using materials specified by Section 5.9.
2. ACI 308.1 "Water Curing" or "Sealing Materials" using wet film curing methods.

B. Moisture Retaining Covering: Tested to ASTM C156 for moisture loss of not more than 0.055 g/cm^3 in 72 hours.
1. Waterproof Paper (Reinforced Kraft Curing Paper): Meet or exceed ASTM C171, Type 1.1.1.2, two sheets of reinforced kraft paper cemented together with bituminous adhesive with one white reflective surface, non-staining, moisture retentive.
   a. Fortifiber Orange Label Sisalkraft 280, specified for type and quality.
2. White Burlap-Polyethylene Sheeting: Meet or exceed ASM C 171 Type1.1.3, synthetic burlap with minimum 10 mil (20 - 40 mil preferred) opaque white polyethylene coating.
   a. Reef Industries, Armorlon Division, Transguard Reusable Wet Cure Covers.
   b. Fortifiber, HydrAdsorb Concrete Curing Blanket.
3. Do not use unfaced polyethylene sheeting.

2.9 CURING COMPOUNDS

A. Liquid-applied curing and sealing compounds:
1. Acceptable for exterior slabs.
2. Not acceptable for interior slabs.

B. Film Forming Modified Acrylic Copolymer: Conforming to ASTM C1315, Type 1, Class A or B.
1. Designed to cure, seal, and dustproof concrete.
2. VOC compliant.
3. Free of silicones, waxes, oils, and other bond breakers .
4. Confirm compatibility with submitted finish flooring.

C. Dissipating Resin Cure: Conforming to ASTM C309 Type I, Class B.

2.10 JOINT FILLERS AND SEALERS

A. Recessed Preformed Joint Fillers:

1. Asphalt Impregnated Joint Filler: Conforming to ASTM D1751. W.R. Meadows, Fibre Expansion Joint No. 320-F, or Architect-approved equal.
2. Rigid Foam Joint Fillers: W.R. Meadows Deck-O-Foam with removable pre-scored strip for installation of elastomeric joint sealants and backer rods, or Architect-approved equal.

B. Interior Semi-Rigid Joint Sealer/Filler: Industrial quality, two component, semi-rigid epoxy or polyurea, USDA approved, ASTM D2240, minimum Shore A 75-85, matching approximate color of natural concrete finish. Specified for type and quality:
1. Epoxy Semi-Rigid Joint Sealer / Joint Filler:
   a. BASR Epolith P (pourable) or Epolith G (gun-grade).
   b. Dayton Superior, Poxy Fil (J-52).
   c. Edoco Burke, Reflex Joint Filler.
   d. Euclid, EUCO 700 or EUCO 800
   e. US MIX, US SPEC SR 50 EJF.
   f. W.R. Meadows, Rezi-Weld Flex.
2. Polyurea Semi-Rigid Joint Sealer:
   a. BASF TF 100.
   b. Dayton Superior, Joint Fill.
   c. Edoco Burke, JointFill.
   d. Euclid, EUCO QWIKjoint 200.
   e. L&M Construction Chemicals, Joint Tite 750.
   f. VersaFlex, SL/75.

C. Exterior Elastomeric Joint Sealant: As specified in Section 079200.

D. Backing Material: As instructed by manufacturer.

2.11 REINFORCING

A. As indicated on the General Structural Notes.

2.12 ANCHOR SYSTEMS

A. Two-Component Adhesive Anchor Systems: Conform to IBC Sections 1911 and 1912, ACI 318 Appendix D, and conforming to ICC Evaluation Service Reports AC 308 and AC193.
1. Post-installed anchors products require current ICC-ES reports showing conformance.
2. Refer to ICC-ES for additional reports.

B. Anchors for use in Seismic Design Category C-F: Suitable for cracked concrete and seismic load as required by IBC Section 1908, modifications to ACI 318, 1908.1.16 ACI 318, Section D.3.3. Suitable for cracked concrete and seismic loads as shown on Drawings by General Structural Notes.

C. Adhesive Anchors: Conform to ICC-ES AC308.

Manufacturer	Approved product	Concrete condition	Seismic design categories	ICC-ES Report number
HILTI	HIT-RE 500-SD Threaded Rod: ⅜", ½", ⅝", ¾", ⅞", 1", 1¼" Threaded Inserts: ⅜", ½", ⅝", ¾" Rebar: #4, #5, #6, #7, #8, #9, #10	Cracked Un-Cracked	A, B, C, D, E & F	ESR-2322
	HIT-HY 200 Threaded Rod: ⅜", ½", ⅝", ¾", ⅞", 1" Rebar: #3,#4, #5, #6, #7, #8	Cracked Un-Cracked	A, B, C, D, E & F	ESR-3013

D. Mechanical Anchors: Conform to ICC-ES AC193.

Manufacturer	Approved Product Name Type of Steel & Diameters Approved	Concrete Condition	ICC-ES Report Number
HILTI	KB-TZ Carbon & 304 Stainless Steel Expansion Anchor ⅜", ½", ⅝", ¾"	Cracked Un-Cracked	ESR-1917
	Kwik HUS-EZ (KH-EZ) Carbon Steel Concrete Screw Anchor ¼",⅜", ½", ⅝", ¾"	Cracked Un-Cracked	ESR-3027
	HSL-3 Carbon Steel Sleeve Anchor 8, 10, 12, 16, 20, 24mm	Cracked Un-Cracked	ESR-1545
	HDA Carbon & 316 Stainless Steel Undercut Anchor 10, 12, 16, 20mm	Cracked Un-Cracked	ESR-1546
ITW REDHEAD	Trubolt + Carbon Steel Expansion Anchor: ½"	Cracked Un-Cracked	ESR-2427
MKT	SRS TZ Carbon Steel Expansion Anchor: ½", ⅝"	Cracked Un-Cracked	ESR-2461
POWERS	Snake Carbon Steel Internal Thread Concrete Screw: ⅜"	Cracked Un-Cracked	ESR-2272
	Power Stud+ SD2 Carbon Steel Expansion Anchor: ½", ⅝", ¾"	Cracked Un-Cracked	ESR-2502
SIMPSON	Strong Bolt Carbon Steel Expansion Anchor: ½", ⅝", ¾", 1"	Cracked Un-Cracked	ESR-1771
	Titan HD Carbon Steel Screw Anchor: ⅜", ½", ¾"	Cracked Un-Cracked	ESR-2713
USP	DUC Carbon Steel Undercut Anchor: ⅜", ½" ⅝", ¾"	Cracked Un-Cracked	ESR-1970

2.13 GROUTS

A. Epoxy Grout: Shear and Tensile Bond Strength: Greater than hardened concrete strength conforming to ASTM C881 as tested to ASTM C882. Compatible for use with damp concrete. Specified for type and quality:
   1. BASF MasterFlow 648 CP Plus.
   2. Hilti EG Epoxy Grout.

B. Non-Shrink Grout under Structural Base Plates and General Use: Specified for type and quality:
   1. BASF MasterFlow 928.
      a. Natural aggregate, ASTM C1107, tested 25 to 30 seconds per ASTM C939 at temperature extremes of minimum 45 degrees F and maximum 90 degrees F.
      b. Compressive Strength at Fluid Consistency: 7,000 psi at 28 days, tested to ASTM C109 as modified by ASTM C1107.
      c. Working Time: 30 minutes.

2. Hilti MG Multipurpose Grout: Tested to ASTM C1107, ASTM C109, ASTM C191, and ASTM C1090. Buy America Compliant.
   a. Temperature Application Range: Between 40 to 95 degrees F.
   b. Compressive Strength: Tested to ASTM C109 as modified by ASTM C1107 for following:.
   c. Plastic Consistency: 7,800 psi at 28 days.
   d. Flowable Consistency: 7,000 psi at 28 days.
   e. Fluid Consistency: 6,500 psi at 28 days
3. Hilti PG Precision Grout: Tested to ASTM C1107, ASTM C109, C191, ASTM C1090,.Army Corps of Engineers CRD-C621, and Buy-American compliant.
   a. Temperature Application Range: Between 40 to 95 degrees F.
   b. Compressive Strength: As tested to ASTM C109 as modified by ASTM C1107 for following:
   c. Plastic Consistency: 11,000 psi at 28 days.
   d. Flowable Consistency: 10,500 psi at 28 days.
   e. Fluid Consistency: 9,500 psi at 28 days.

C. Non-Shrink General Use Grouts for Low Temperature Use: Where temperatures are below or are expected to fall below 45 degrees F, substitute low-temperature grout, with properties exceeding ASTM C1107. Do not install at high temperatures: Following is specified for type and quality.
   1. Dayton Superior, Turbo Grout HP12LT. Compressive strength at 35 degrees F.
      a. 3 Hours: 4,000 psi.

D. Non-Shrink Grout Under Mechanical Equipment: Metallic-aggregate, ASTM C1107, tested 25 to 30 seconds per ASTM C939 at temperature extremes of minimum 45 degrees F and maximum 90 degrees F.
   1. Compressive Strength at Fluid Consistency: 9,000 psi at 28 days, tested ASTM C109.
   2. Working Time: 30 minutes.

E. Masonry Grout: As specified Section 040515.

2.14 CONCRETE REPAIR MORTAR

A. Fast Setting Flowable Repair Mortar for Horizontal Surfaces: Conforming to ASTM C928.
   1. BASF/MBT, EMCO T415.
   2. Dayton Superior, HD-50.
   3. Burke by Edoco; Fast Patch 928.
   4. Hilti RM 800 PC

B. Non-Sag Fast Setting Cement-Based Repair Mortar for Vertical and Overhead Surfaces: Conforming to ASTM C928.
   1. BASF/MBT, EMACO GP.
   2. Sika, Sikatop 122 Plus.

2.15 SAW CUT CONTROL JOINTS EQUIPMENT

A. Husqvarna Soff-Cut, specified for type and quality.

B. Saw Blades for Cutting Green Concrete:

C. Model: As instructed by manufacturer for saw model and concrete composition and hardness.

D. Depth of Cut: Minimum 1 inch deep and 1/4 depth of concrete slab, except as otherwise shown on Drawings.

E. Width of Cut: Approximately 0.120 inch (1/8 inch).

2.16 SCREEDS

A. Laser Screeding: Preferred and accepted in lieu of base screeds specified by this Section.

B. Base Set Screed Posts: Non-stake screeds accepted. Following specified for type and quality and as accepted by Architect.

1. Fabricated, removable, 1/4 inch by 12 inch by 12 inch steel base plate with welded steel or all-thread steel screed post.
2. Leave-In-Place Screed Rail: Floor Leveling Systems Ltd., CombiForm Floor Leveling System.

C. Ground Set Screed Stakes: Accepted at exterior paved areas. Not accepted at interior slabs.

2.17 FINISHES

A. Verify conformance to final finishes based on Architect-accepted mockups specified in this Section.

B. Horizontal Concrete Surface Retarder: GCP Top-Cast, as distributed by Dayton Superior, specified for type and quality and as accepted by mockup. Grades, based on resulting appearance, are as follows.
1. Acid Etch: Grade 03, Light Violet.
2. Sand Blast: Grade 05, Powder Blue Violet.
3. Up to 1/4 Inch: Grade 15, Yellow.
4. 1/8 to 1/4 Inch: Grade 25, Beige.

C. Vertical In Form Surface Retarder: Refer to Section 031000.

D. Slab Tooling Finishes: Refer to Part 3 of this Section.

2.18 SOURCE QUALITY CONTROL

A. Conform to provisions and limitations ACI 340R and ASTM C90.

B. Batching and Mixing: Conform to ASTM C94, Option A for exact proportioning of mix design.

C. Reject concrete that has reached internal temperature of 89 degree F or above and when temperature has risen 5 degrees in 10 minutes, indicating that concrete is setting up prior to discharge.

D. Mix Water: When feasible, add mix water required for mix design at batch plant.

E. Admixtures: Add to within accuracy of 3 percent.
1. Add separately and verify compatibility in design mix, conforming to manufacturer's instructions.
2. Reject concrete that shows signs of segregation due to use of admixtures.

F. Accelerating and Set Retarding Admixtures:
1. Accepted for long hauls for extending transportation time, cold weather, and hot weather conditions conforming to hot and cold weather placement requirements.
2. Measure concrete temperature and confirm that temperature has not exceeded 89 degrees F or 5 degrees F in 10 minutes before acceptance at site.

G. Batching of Dry Materials and Adding Mix Water at Site:
1. Accepted for long hauls and for extending transportation time as an alternate procedure to adding accelerating and set retarding admixtures.
2. Add mix water under pressure at both front and back of mixing drum.
3. Mix at mixing speed for 70 to 100 revolutions before discharging.

H. Adding Mix Water at Project Site: Accepted as needed to increase slump of concrete within first 15 minutes after truck arrives at site, under following conditions.
1. Quantity of water does not exceed specified maximum water/cement ratio and conforms to batch plant mix designer's written instructions.
2. Do not exceed maximum acceptable slump per mix design.
3. Special Inspector is present to monitor quantity of water added in comparison to that added at batch plant and make written record of that for each truck load delivered.
4. Drum is turned an additional 30 revolutions or more as necessary to uniformly mix water into concrete.
5. Water is not added to concrete batch after:
   a. Taking test cylinders, except where new test cylinders are taken at Contractor's expense.
   b. Adding high-range water-reducing admixtures to concrete mix.

I. Do not use calcium chloride containing products.

PART 3 - EXECUTION

3.1 CONCRETE PLACEMENT

A. Conform to IBC Chapter 19, ACI 301, ACI 304R, ACI 304.2R, and provisions of Contract Documents.

3.2 CONVEYING CONCRETE

A. Convey concrete from mixing truck to location of placement Use clean equipment of type and size needed for continuous concrete flow, without loss of consolidation and separation of ingredients to placement locations before cold joints develop.

B. Clean conveying equipment before each placement.

C. Do not use aluminum pipes or chutes.

D. Do not place concrete pumping slurry in forms.

E. Do not allow mud and other foreign substances into concrete during placement.

F. Chutes: Use metal or metal-lined chutes having rounded bottoms and slope between 1:2 and 1:3 slope. Chutes more than 20 foot in length and those not meeting slope requirements are accepted if they discharge into a hopper prior to discharging into forms.

G. Pumping or Pneumatic Conveying: Conform to ACI 304.2R. Use means to permit placement at rates to prevent development of cold joints and to prevent segregation.

H. Use steel pipe or flexible hose at least 3 times maximum size of coarse aggregate.

I. Do not exceed distance that exceeds limits as instructed by pump manufacturer.

J. Maintain continuous flow of concrete to deposit point.

K. Eject concrete remaining in pipeline, when pumping is complete, without contaminating in-place concrete.

3.3 DEPOSITING CONCRETE

A. Deposit concrete in one layer, or in multiple layers, where concrete is deposited on concrete that is still plastic.

B. Do not use concrete that has drying of surface, has partially hardened, and contains foreign material.

C. Do not deposit fresh concrete on concrete that has hardened sufficiently to cause cold joints, seams, and planes of weakness. Provide construction joints where a section cannot be placed continuously, conforming to provisions of Contact Documents.

D. Deposit concrete as close to final destination as possible to prevent segregation.

E. Place concrete for beams, girders, brackets, column capitals, haunches, and drop panels at same time as concrete for slabs.
   1. Do not exceed 3 foot vertical drop, except where suitable equipment is utilized to prevent segregation and as accepted by Architect/Structural Engineer.
   2. Conform to ACI 301 for Architectural Concrete.

F. Do not disturb in-place items such as reinforcement, inserts, embedded parts, formed expansion/contraction joints, vapor retarder, and formwork.

G. Place continuously between construction and expansion/contraction joints.

H. Place succeeding lift while previous lift is still plastic.

3.4 CONSOLIDATING CONCRETE

A. Consolidate concrete placed in forms using mechanical vibration, conforming to ACI 309.

B. Vibrate to obtain thorough consolidation, and complete filling of forms.

1. Use vibrators with not less than 8,000 vibrations per minute.
2. Use head diameter and amplitude appropriate to concrete being placed.
3. Have a spare vibrator on hand at job site during placement operations.
4. Do not use vibrators to transport concrete inside forms.

C. Extend and withdraw vibrators vertically at uniform spacing over area of placement and at least 6 inch deep into previous placement.
1. Vibrate areas at not more than 2-1/2 times radius action of vibrator so that area being vibrated overlaps, by a few inches, adjacent area just vibrated.
2. Do not insert vibrators into lower areas that have begun to set.
3. Do not place vibrators within 2-1/2 inch of form face.
4. If there is a delay of more than 15 minutes, vibrate previous lift prior to placing new concrete.

D. Thoroughly work concrete around reinforcement, embedded items, and into corners of forms to eliminate air and stone pockets that may cause honeycombing, pitting, and planes of weakness.

E. Limit vibration duration to time necessary for consolidation of concrete around reinforcement and other embedded items without causing segregation of mix.

F. Do not re-tamper concrete that has taken initial set.

3.5 COLD WEATHER CONDITIONS

A. Conform to 306R and ACI 306.1.

B. Do not place concrete on ice, snow, frost, or frozen substrates including subgrades, formwork, reinforcement, and embedded items.

C. Temperature of Concrete: Maintain for 7 days between 50 degrees F and 90 degrees F curing temperature.

D. Take measures to protect concrete from freezing when for daily temperatures below 40 degrees F following first 5 days after placement.

E. In severe weather, at end of 5 days, gradually decrease temperature to ambient over 24 hour period.

F. Do not use calcium chloride, salt, or other materials containing anti-freeze agents or chemical accelerators.

G. Use of Heaters:
1. Do not use propane or other moisture and carbon-dioxide producing heaters
2. Maintain uniform temperature throughout heated areas.
3. Prevent rapid drying of new concrete. Elevate heaters and protect floor slabs around heaters with damp sand.

H. Insulation:
1. Accepted to retain heat in newly placed concrete.
2. Conform to ACI 306R and ACI 306.1 for type and amount satisfactory for given conditions.
3. Protect corners and edges of concrete placement.

3.6 HOT WEATHER CONDITIONS

A. Conform to ACI 305.1 - Specification for Hot Weather Concreting.

B. Under conditions of wind, low relative humidity, temperatures exceeding 85 degrees F, and conditions resulting in insufficient bleed water at concrete surface, spray-apply monomolecular surface evaporation retarder immediately before, during, and after finishing as required to prevent plastic shrinkage cracking.

C. Temperature of Fresh Concrete: 90 degrees F maximum at time of placement.
1. Cool ingredients before mixing to maintain concrete temperature at time of placement below 90 degrees F, using chilled mixing water, chopped ice, or other accepted means to control temperature provided water contributed conforms to water/cement ratio of mix design.
2. When temperature of steel reinforcement, embedments, or forms exceeds 120 degrees F, fog with water immediately prior to placing concrete. Remove standing water before placing concrete.
3. Dampen subgrade maintaining uniform moisture, free of puddles and dry areas.

4. Use water-reducing retarding admixture when required by high temperatures, low humidity, and other adverse placing conditions, as accepted by Architect/Structural Engineer.

D. Following placement, moist cure for 24 hours whenever ambient temperature exceeds 85 degrees F. After 24 hours, concrete may be cured by conventional method.

E. During finishing, whenever ambient temperature exceeds 85 degrees F, fog water spray to prevent plastic shrinkage.

3.7 EMBEDDED ITEMS

A. Locate and embed expansion joints, joint fillers, waterstops, anchor bolts, embedded plates, dovetail anchor slots, piping, conduit, radiant heating tubes, and other items required for work for this and other Sections.

B. Use templates, setting diagrams, and drawings, conforming to manufacturer instructions.

C. Fill voids in sleeves, inserts, and anchor slots with temporarily, easily removable material to prevent entry of concrete.

D. Do not embed aluminum except where protected from contact with concrete.

3.8 CONSTRUCTION, ISOLATION, AND CONTRACTION JOINTS

A. Conform to ACI 302.IR. Locate where shown on Drawings and accepted shop drawings. Verify locations with Architect before proceeding.

B. Locate to least impair structural integrity. Locate joints perpendicular to primary reinforcing steel.
1. Remove laitance and defective concrete. Wash surface.
2. Apply bonding agent against hardened concrete.

C. Bonded Construction Joints (Cold Joints) between Successive Concrete Placements: Locate joints to least impair structural integrity, perpendicular to primary reinforcing steel.
1. Dowel between slabs, as shown on Drawings
2. Remove laitance and defective concrete. Wash surface.
3. Apply bonding agent against hardened concrete.
4. Dampen concrete surface. Remove excess water from formwork.
5. Install expanding joint strip or saw cut contraction joints over construction joints between individual slab placements.

D. Isolation Joints:
1. Establish complete separation through floor slabs at junctions with other building elements and points of restraint including walls, columns, equipment foundations, and stairways, except elements requiring lateral restraint from slab.
2. Fill to complete depth of joint with preformed joint filler, leaving 1/2 depth of joint width clearance below top of slab for installation of backer rod and sealant.

E. Saw Cut Contraction Joints: Saw cut interior and exterior slabs using soft cut method over green concrete as soon as slab will support foot traffic and before slab begins to experience shrinkage cracking, conforming to ACI 302.1R Chapter 3.
1. Space saw-cuts at 2 to 3 foot spacing for each 1 inch depth of concrete slab and as accepted by Architect.
2. Saw-cut joints minimum 1 inch deep and not less than 1/4 depth of concrete slab, except as otherwise shown on Drawings.
3. Saw-cut joints at 45 degree angle from corner of diamond shaped slab panels.
4. Exactly meet corners of cut outs to prevent cracking from corners.
5. Locate contraction joints over structurally supporting beams.
6. Maximum length to width ratio of panels in floor slabs is 1.5 to 1, although 1 to 1 is preferred.
7. Maximum length to width ration of panels in exterior pavement is 1.25 to 1, although 1 to 1 is preferred.
8. Do not form T-shaped or L-shaped saw-cut joints in panels.
9. Make joints continuous. Do not offset or stagger.

10. Space contraction joints equal distance between contraction joints at column lines, over construction joints, supporting structural beams, and change of substrate.
11. Burnish edges of joints while concrete is still green.

3.9 FINISHES FOR FORMED SURFACES

A. Strike unformed surfaces at top of walls and horizontal offsets smooth after concrete placement and float to finish texture consistent with adjacent formed surfaces.

B. As Cast Finish: Coordinate with fabrication of formwork.
1. Architectural Finish: Patch tie holes and defects, and remove fins. Conform to ACI 301 and other provisions of Contract Documents for Architectural Concrete.
2. Smooth-Form Finish: Patch tie holes and defects. Remove fins exceeding 1/8 inch in height. Leave surfaces with texture imparted by forms.
3. Rough-Form Finish: Patch tie holes and defects. Remove fins exceeding 1/2 inch in height. Leave surfaces with texture imparted by forms. Not accepted for below grade waterproofing.

C. Sand Blasted Finish: Light textured sand blast at exterior cast-in-place site walls, as accepted by Architect from mockup, specified by this Section.

3.10 FINISHES FOR SLABS AND OTHER UNFORMED SURAFACES

A. Finish concrete slabs to ACI 301, ACI 302.1R Chapter 8 , and as accepted from accepted mockups specified by this Section.

B. Edge Forms and Screeds: Use specified screed systems that will not penetrate underlying vapor retarder at interior slab-on-grade.

C. Placement: Place at rate that allows spreading, straight-edging, and darbying or bull floating before appearance of bleed water.

D. Tolerances: Measure floor slabs for suspended floors and slabs-on-grade within 72 hours after slab finishing and before removal of supporting formwork or shoring. Verify conformance to tolerance requirements of ASTM E1155 and ACI 117.

E. Screeding: Set screeds to specified floor levelness and flatness tolerances using wood or magnesium straightedge to strike concrete to predetermined grade.
1. Tool salient edges of concrete.
2. Make sharp arise at wall to floor conditions.
3. Where water has accumulated, drain and re-screed.

F. Scratch Finish: Provide for slabs receiving subsequent bonded topping slabs.
1. Place, consolidate, strike off, and level concrete, eliminating high and low spots.
2. Bull float to achieve finish tolerance requirements.
3. Roughen surface with stiff brushes or rakes before final set.
4. Where a bonded concrete composite topping slab diaphragm is required, leave an intentionally roughened surface, conforming to ACI 318 Section 21.9.2.

G. Float Finish in Preparation for Other Finishes: Provide before other finishes to embed aggregates below concrete surface, to make level and flat, and to compact and consolidate slab in preparation for other finishing operations.

H. Float Finish: Provide as final finish at concrete slabs where a float finish is desirable for improved mechanical bonding of subsequent coatings, toppings, underlayments, and floor finishes.
1. Place, consolidate, strike off, and level concrete, eliminating high and low spots.
2. Do not work concrete again until it is ready for floating.
3. Allow concrete time to bleed naturally before beginning work.
4. When bleed water sheen has disappeared, begin floating with a hand float, a bladed power float equipped with float shoes, or a powered disk float.
5. Bull float to achieve finish tolerance requirements.
6. Float to conventional straightedge requirements and then refloat to a uniform texture.

7. Leave a rough, granular finish, intentionally roughened surface profile, conforming to ACI 318 Section 21.9.2, equivalent to ICRI Guideline No.03732 CSP-3, conforming to Architect accepted mockup and as required to make suitable surface for mechanical bond and adhesion.
8. Slope exterior paved surfaces away from building in slopes to drain without ponding.

I. Troweled Finish: Provide at exposed concrete slabs, except where a float finish is desirable for improved mechanical bonding of subsequent coatings, toppings, underlayments, and floor finishes
1. Float concrete surface then power trowel surface.
2. Continue troweling until surface is hard enough to ring under trowel.
3. Towel and compact surface smooth and fee of trowel marks, uniform in texture and appearance.
4. Finish to specified tolerances. Do not burn or overwork concrete.
5. Retain moisture in slab surface during finishing. Provide fog spray in dry or windy weather.
6. Do not blacken or burn concrete surface with power trowel.

J. Light Broom Finish: Conform to Architect-accepted mockup.
1. Provide at exterior paved surfaces and as shown on Drawings.
2. Float finish slab and promptly after initial set, broom finish surface uniformly and perpendicularly to traffic in accepted texture.

3.11 SEMI-RIGID JOINT SEALERS/FILLERS AND ELASTOMERIC JOINT SEALANTS

A. Exposed Interior Saw-Cut Contraction Joints:
1. Install semi-rigid polyurea or epoxy joint sealer, approximately matching color of finish floor slab.
2. Install to fill 1 inch deep saw-cut contraction joint.
3. Overfill and shave sealant flush with floor surface to make smooth surface flush with top of adjacent slab.

B. Interior and Exterior Isolation and Control Joints:
1. Install preformed joint fillers leaving 1/2 depth of joint width clearance below top of slab for installation of backer rod and sealant.
2. Install backer rod and elastomeric joint sealant as specified by Section 079200.
3. Tool to concave configuration at exterior joints and flat configuration at interior joints, flush to paving surface.
4. Do not install elastomeric sealant at exterior saw cut contraction joints.

3.12 CONCRETE CURING - GENERAL

A. Conform to ACI 301 Section 5.3.6 and ACI 308.1.

B. Take measures, immediately following placement to prevent premature drying, excessive hot or cold temperatures, and mechanical injury.

C. Maintain concrete to minimize moisture loss and maintain relatively constant temperature during period of hydration of cement as necessary for strength development and structural performance.
1. Spray apply monomolecular surface evaporation retarder to delay evaporation of bleed water over newly placed slabs where exposed to wind, high temperatures, or low relative humidity.
2. After placement and finishing, begin initial curing as soon as free water has disappeared from concrete surface.
3. Following initial curing and before concrete has dried, begin final curing procedures.
   a. Avoid rapid drying following final curing period.
   b. Upon completion of final curing of concrete slabs, withdraw water on a gradual basis for an additional 7 days.
4. Monitor curing operations minimum every 8 hours, including weekends and holidays, and take measures to maintain surfaces fully wetted.
5. Extend curing periods for concrete where 7 day test cylinders indicate that 28 day concrete is less than 85 percent of design strength.

D. At temperatures below 40 degrees F, protect concrete from freezing in conformance to ACI 306.1

E. Cure concrete for minimum 7 days, maintaining concrete surface temperature of not less than 50 degrees F, and as accepted by Architect for high early strength concrete.

F. Cure high-early strength concrete for minimum 3 days following placement, where accepted by Architect/Structural Engineer.

3.13 CURING FORMED SURFACES

A. Keep absorbent wood forms wet until removed.

B. Following removal of forms, continue curing using one or more methods specified by ACI 308.1, including moisture-retaining membranes, curing compounds, water ponding, fog spraying, water sprinkling, or water-absorbent materials.

C. Sheet Materials: Conforming to ASTM C171 and as specified by this Section.

D. Curing Compounds: Conform to provisions of this Section.
   1. Following finishing operations, apply as soon as water sheen has disappeared from concrete surface, as instructed by manufacturer.
   2. For rough surfaces, apply curing compound at right angles to each other at not less than 200 square foot per gallon.
   3. Do not apply to surfaces to be bonded or receiving other finishes, except as accepted by Architect.

3.14 CURING CONCRETE SLABS

A. Conform to methods specified by ACI 301 Section 5.3.6, ACI 302.1R Section 9.2.1 through 9.2.3.2 and ACI 308.1 Section 2.2 through Section 2.3.2.

B. Liquid Curing Compounds: Accepted at exterior slabs. Not accepted at interior slabs. Conform to manufacturer's instructions.
   1. Apply one coat on new concrete as soon as surface water disappears.
   2. Apply with low pressure spray at 200-300 square feet per gallon.
   3. Squeeze off excess and allow to dry thoroughly.
   4. Cover with specified polyethylene curing film.
   5. Reapply within 3 hours following exposure to rainfall.

C. Sheet Membrane Curing: Conform to ACI 302.1R Section 9.2, excluding Section 9.2.4, and ACI 308.1 Section 2.2 or Section 2.3, excluding Section 2.3.3.
   1. Fog spray or sprinkle and take other measures to maintain continuous layer of water over concrete surface.
   2. Cover concrete slab with wet burlap or waterproof curing film. Use waterproof paper at stained concrete and integrally colored concrete. Do not use plastic.
   3. Secure edges and corners of curing film to maintain in place over concrete and prevent drying.
   4. Leave curing film in place as necessary to maintain suitable moisture content and temperature of concrete for minimum 7 day curing period.
   5. Keep concrete moist. Add water as needed to maintain wet surface.
   6. At exterior slabs not subject to drying, curing film may be omitted when accepted by Architect.

D. Following initial curing period, take measures to remove excess unhydrated moisture from slabs to reach moisture vapor emission rates (MVER) to acceptable levels for installation of finish flooring.
   1. Measures include heating and ventilating to exhaust moisture from interior of building areas.
   2. Do not use propane heaters or other moisture generating heating equipment.

3.15 GROUTING

A. Solid Grouting under Structural Base Plates, Mechanical Equipment and Obstructed Voids and Joints.
   1. Mix grout to fluid consistency.
   2. Construct liquid tight formwork and pour grout in place.
   3. To prevent voids, pour grout from only one side so that flow exits from opposite side. Work poured grout firmly in place.
   4. Dry packing not permitted.

B. General Use: Include anchoring, filling cracks, and repairs such as filling rock pockets and pipe penetrations:
   1. Mix non-shrink, aggregate grout to optimal fluid, flowable, or plastic consistency as necessary for solid grouting and repair.
   2. Trowel grout at plastic consistency at voids and around pipe penetrations to fill voids and to match adjacent surfaces.

C. Cold Weather Grouting: When ambient temperatures are below or are predicted to fall below 45 degrees F, use cold weather grout or build a cold weather enclosure over grouting placement area and maintain minimum enclosure temperature at 60 degrees for 72 hours after grout placement and as instructed by manufacturer.

3.16 TOLERANCES

A. General Tolerances: Conform to ACI 117 and ACI 302.1R for tolerances of construction and materials.

B. Vertical, Lateral, and Relative Alignment and Cross Sectional Dimensions: Conform to ACI 117 and as specified for offset between adjacent formwork facing material.

C. Floor Slab Tolerances: Conform to ACI 302.1R and ACI 117 for Floor Flatness and Floor Levelness tolerance. Measure and test to ASTM E1155 within 72 hours after placing concrete slab and prior to removal of forms. For suspended slabs, test for levelness with shoring in place. Grind joints if required to achieve specified F numbers.

Location	Floor Profile Quality Classification	Minimum F_F and F_L Numbers Required			
		Overall F Number		Minimum Local F Number	
		Flatness FF	Level FL	Flatness FF	Level FL
Noncritical/mechanical & electrical rooms	Conventional Bull Floated (1/2 inch in 10 foot)	F_F 15	F_L 13	F_F 13	F_L 10
Janitorial & utility rooms	Conventional Straightedge (5/16 inch in 10 foot)	F_F 20	F_L 15	F_F 15	F_L 10
Carpeting	Moderately Flat (3/8 inch in 10 foot)	F_F 25	F_L 20	F_F 17	F_L 15
Resilient flooring	Flat Finish (3/16 inch in 10 foot)	F_F 30	F_L 20	F_F 18*	F_L 10
Thin-Set Tiling, Exposed concrete when not otherwise indicated	Flat (3/16 inch in 10 foot)	F_F 35	F_L 25	F_F 24	F_L 17
Ground and hardened exposed slabs	Flat Finish	F_F 40	F_L 20	F_F 24	F_L 10
Large format tiling (either dimension is greater than 15 inches)	Very Flat Finish	F_F 50	F_L 35	F_F 35	F_L 24
*Minimum Overall F_F Number to Minimum Local F_F Number: 5:3 Ratio (ACI specifies 2:1).					

D. Where specified concrete finishing tolerance measurements are not applicable due to vertical surfaces of architectural concrete, or confined/detailed areas: Finish and measure surface so gap at any point between concrete surface and an unleveled, freestanding, 10-ft.- long straightedge resting on two high spots and placed anywhere on the surface does not exceed 1/8 inch

E. Slab Thickness Tolerances:
   1. Cast and finish concrete slabs in constant thickness above steel framing members, conforming to ACI 117.

2. Compensate thickness of concrete slabs over steel decking between beams, accounting for steel deck deflection, as needed to achieve level slab.

F. F_L Tolerances: Not applicable to inclined slabs, cambered slabs, and deflecting slabs.

3.17 CONCRETE SURFACE REPAIRS

A. Promptly report surface defects to Architect for direction prior to making repairs.

B. Repair, patch, and remove stains rust, efflorescence, and surface deposits, as directed by Architect.

C. Where repairs and patching are not practical as a solution to achieve intended results, cut out and replace.

3.18 CONCRETE STRUCTURAL REPAIR

A. Prior to Substantial Completion: Repair:
1. Cracks, regardless of widths, penetrating completely through slabs and walls.
2. Cracks that impair structural integrity.
3. Cracks that are subject to water leakage.

B. Inject cracks with epoxy or methylmethacrylate resin.
1. Use pressure or vacuum injection methods to monolithically bond and seal cracks without expanding cracks.
2. Submit and follow procedures acceptable to Architect.

3.19 REPAIRING UNFORMED SURFACES

A. Surface Defects: Repair and repair defects to specified tolerances and specification, including:
1. Crazing and cracks, in exceeding 0.01 inch wide or penetrating to reinforcing steel.
2. Spalls, pop-outs, honeycombs, rock pockets, and other objectionable conditions.

B. Floor Slab Flatness and Levelness: Correct floor flatness and floor levelness, not meeting specified tolerances in conformance to ACI 301, to make suitable substrate for finish floor systems.

C. Correct high areas by wet grinding after concrete has cured at least 14 days. Make test on trial area and obtain acceptance from Architect before proceeding.

D. Correct low areas and swales at floors receiving finished flooring systems by cutting out and replacing with fresh concrete or by using cementitious underlayment as specified Section 090561.

3.20 REPAIRING AND FINISHING FORMED SURFACES

A. Formwork Surfaces: Refer to provision specified by Section 031000.

B. Surface Defects:
1. Patched and repair to specified tolerances and specifications, including defective surfaces affecting appearance.
2. Make smooth and free of fins, bulges, ridges, bug holes, offsets, honeycombing, gravel pockets, voids, and unacceptable roughness.

C. Repair Procedures for honeycombs, Rock Pockets, Voids, and Similar Surface Defects:
1. Outline defective area with 1/2 to 3/4 inch deep.
2. Cut out defective concrete to make patches not less than 1 inch deep.
3. Chip out concrete to 3/4 inch clearance behind and around exposed reinforcing steel.
4. Slightly undercut chipped out areas. Do not feather edges.
5. Saturate cavities and 6 inch wide adjacent areas with clean water for 24 hours immediately before patching and repair.
6. Apply commercial bonding agent as instructed by manufacturer
7. Parge surface with commercial repair cement mortar compound to match adjacent areas. Use as little water in mix as possible.
8. Fill voids leaving patch slightly higher than surrounding surface to permit initial shrinkage.
9. Leave patch undisturbed before finishing to match adjacent surfaces.

10. Damp cure patch for 7 days.

D. Exposed Surfaces: Conform to ACI 301 for Architectural Concrete at exposed concrete.
   1. Knock fins off and patch imperfections for a smooth surface to match adjacent surfaces in appearance.
   2. Rub rough surfaces with carborundum stone as directed by Architect.
   3. Leave surfaces clean and smooth.

E. Sacking: Patch spalls, and other surface voids and blemishes at exposed to view concrete not conforming ACI 301 for Architectural Concrete while concrete is still green.

F. Commercial Repair Products: As specified by this Section or accepted by Architect.

G. Site Mixed Repair Mortar and Grout:
   1. Bonding Grout: Mix approximately 1 part Portland cement and 1 part fine sand with water to consistency of thick cream.
   2. Repair Mortar: Mix repair mortar using same materials as concrete to be patched, except do not use coarse aggregate. Do not use more than 1 part cement to 2-1/2 parts sand by damp loose volume.
      a. For repairs to exposed concrete, make trial batch and check for color compatibility of repair material to surrounding concrete. Blend white portland cement with standard portland cement to achieve matching color of surrounding when dry.
      b. Use stiff consistency with no more mixing water than necessary for handling and placing.

H. Mix repair mortar and trowel mortar frequently without adding water

3.21 FIELD QUALITY CONTROL

A. Testing and Special Inspections: Conform to requirements specified in Section 014533 and as indicated on Structural Drawings.

B. Concrete Slabs Receiving Resilient Flooring Systems: Perform testing as required by flooring manufacturer.

END OF SECTION

SECTION 033546 - CONCRETE TOPICAL TREATMENTS

PART 1 - GENERAL

1.1 COORDINATION

A. Coordinate product locations for exposed and otherwise unfinished concrete, and where indicated. Confirm compatibility before using with finish flooring or other vapor retarder products. Coordinate with:
   1. Section 090561 for flooring preparation and vapor retarders for use if required to mitigate excessive moisture or alkalinity in concrete.
   2. Division 09 Sections for finish flooring.

1.2 SUBMITTALS

A. Product Data: For each type of product. Include preparation requirements and application instructions.

1.3 QUALITY ASSURANCE

A. Field Sample: Before applying sealer to entire project, apply 100 sq. ft. and request approval from Architect. Accepted sealer may be incorporated into the Work.

PART 2 - PRODUCTS

2.1 MATERIALS, GENERAL

A. Compatibility: Provide materials for use within sealed concrete system that are compatible with one another and substrates indicated, under conditions of service and application as demonstrated by manufacturer, based on testing and field experience.

2.2 CONCRETE SEALERS

A. Concrete Substrates, Traffic Surfaces: Seal slab as required by manufacturer

PART 3 - EXECUTION

3.1 APPLICATION

A. Apply system according to manufacturer's written instructions.

B. Apply to produce surface films without cloudiness, spotting, holidays, laps, brush marks, roller tracking, runs, sags, ropiness, or other surface imperfections.

C. Protect work of other trades against damage from sealer application. At completion of construction activities of other trades, touch up and restore damaged or defaced sealed surfaces.

END OF SECTION

THIS PAGE INTENTIONALLY LEFT BLANK

SECTION 040515 - MASONRY MORTARING AND GROUTING

PART 1 - GENERAL

1.1 SUBMITTALS

A. Design Data: Proposed mortar and grout mixes with supporting strength test data.

B. Color Samples: Manufacturer's complete selection.

1.2 QUALITY ASSURANCE

A. Masonry Mortar: Provide factory preblended masonry mortar and colored mortar mixes.

B. Field Samples: Provide masonry mortaring and grouting for field samples specified in other Division 04 Sections.

PART 2 - PRODUCTS

2.1 MANUFACTURERS

A. Manufacturers: Provide products from one of the following, or approved substitution.
   1. Factory Preblended Masonry Mortar and Colored Mortar Mixes:
      a. Davis Colors
      b. Essroc; flamingo-BRIXMENT
      c. Lambert Corporation
      d. Mutual Materials
      e. Quikrete Companies; Spec-Mix, Inc.
      f. Solomon Colors
   2. Water Repellent Masonry Mortar Admixture:
      a. GCP Applied Technologies
      b. BASF Construction Chemicals, LLC, Master Builders Solutions

B. Approved Substitutions: Architect-approved equal products submitted in conformance with provisions specified for substitutions.

2.2 REGULATORY REQUIREMENTS

A. Special Inspections: Coordinate, as specified in Division 01, Quality Requirements.

B. Take initial mortar and grout samplings as specified by this Section to verify conformance to specified requirements before beginning work.

2.3 MATERIALS

A. Masonry Cement: Not acceptable.

B. Mortar Cement: Not acceptable.

C. Portland Cement: ASTM C150, Type I, unless otherwise indicated or required for cold-weather procedures.
   1. Color: As required for mortar color(s) of approved samples.

D. Hydrated Lime: ASTM C207, Type S.

E. Aggregates (Sand): Clean washed.
   1. Mortar: ASTM C144.
      a. Color: As required for mortar color(s) of approved samples.
   2. Grout: ASTM C404.

F. Water: Clean, free from acids, alkalis, organic material, minerals, salts, and other deleterious materials. Seawater not accepted.

G. Grout Additive: Sika Grout Aid Type II, expanding water-reducer retarding high-lift grouting aid.

H. Water Repellent Masonry Mortar Admixture:
   1. Concrete Masonry:
      a. GCP Applied Technologies, Dry-Block.
      b. BASF MasterPel 240MA Mortar Admixture.
   2. Brick Masonry:
      a. GCP Applied Technologies, Dry-Brick.
      b. BASF MasterPel 240MA Mortar Admixture.

I. Colored Pigments for Masonry Mortar: Conform to ASTM C979.

J. Other Additives: As accepted by Architect. Do not use accelerators or admixtures containing calcium chloride or salts.

2.4 MORTAR MIXES AND PROPORTIONS

A. Mortar Types and Mixes: ASTM C270.

B. Comply with Proportion Specifications per ASTM C270, unless presenting data to show that mortar meets the requirements of the Property Specifications of ASTM C270.

C. Mortar for Anchored Veneer Unit Masonry: Type S or N Mortar.
   1. Property Specifications: ASTM C270 Table 1.
   2. Proportion Specifications: ASTM C270 Table 2, minimum 750 psi in 28 day compressive strength.

2.5 MASONRY GROUT MIXES AND PROPORTIONS

A. Grout: Conform to ASTM C476.

B. Grout Proportions: ASTM C476, Table 1 and as required to meet specified compressive strength, as accepted by Architect.

C. Fine Grout:
   1. Compressive Strength: ASTM C1019, Minimum 2,000 psi in 28 days.
   2. Fluid Consistency: Maintain minimum 8 inch slump and as necessary to completely fill masonry voids.

2.6 CLAY AND CONCRETE MASONRY CLEANERS

A. Masonry Cleaner: Non-acidic, commercial cleaning detergent. Muriatic acid not accepted.
   1. Products: Provide one of the following, or Architect-approved substitution. Before beginning the Work, confirm with manufacturer for types of masonry, cementitious materials, conditions of use, and regulatory requirements.
      a. Diedrich Technologies, Hohmann & Barnard, Inc., a MiTek Berkshire Hathaway Company: 202 New Masonry Detergent
      b. Envirosafe Manufacturing Corp.: Easy Brick Cleaner
      c. PROSOCO, Inc.: Sure Klean 600

2.7 FINISHES

A. Exposed Mortar Colors: Solomon Colors, Inc. (wet mix colors) or Davis Colors of Venator Materials PLC (dry mix colors), or Architect-approved equal.
   1. Mortar: As selected by Architect from manufacturer's available colors.

PART 3 - EXECUTION

3.1 INSTALLATION

A. Conform to manufacturer's instructions and provisions of Contract Documents.

B. Install under work of masonry Section(s).

3.2 MORTAR AND GROUT MIXING

A. Proprietary Mortars: Mix as instructed by manufacturer, conforming to ASTM C270.

B. Grout Mixing: Conform to ASTM C476.

C. Water Repellent Masonry Mortar Admixture: Prepare mortar for use by incorporating admixture into mortar mix, as instructed by manufacturer.

D. Mix mortar colors into mortar at percentage required to match Architect accepted color samples and accepted field samples specified under applicable masonry Sections.

E. Grout Additives: As specified this Section, conforming to manufacturer's instructions.

3.3 FIELD QUALITY CONTROL

A. Special Inspections and Testing: IBC Chapter 17 and as indicated.

B. Independent Inspection and Testing Laboratory procedures as specified in Division 01.
   1. Evaluation of Factory Preblended, Field Mixed Mortar Used in Masonry: Sample and test mortar for composition and for plastic and hardened properties prior to and during use in construction. Conform to and test samples to ASTM C780.
      a. Preconstruction Evaluation: Make laboratory trial batches and test each mortar used on project.
      b. Construction Evaluation: Test actual batches each day and verify consistency with preconstruction test results, batch to batch variations, and characteristics between batches.
   2. If Property Specification is used: Test Specimens of Mortar and Grout for Structurally Reinforced Masonry:
      a. Mortar Sampling:
         1) Take one sample for each day of masonry construction consisting of 4 mortar cubes for each sample.
         2) Mold, cure, store, and test in accordance with ASTM C109.
      b. Grout Sampling:
         1) Take one set of specimens for each day of masonry construction consisting of 3 specimens for each set.
         2) Mold, cure, and store specimens in conformance to ASTM C1019.
         3) Test masonry prism specimens for compressive strength to conform with ASTM C1314 and provisions of Division 01 Quality Requirements.

3.4 MASONRY CLEANING

A. Remove excess mortar including stains and smears as work progresses.

B. Upon completion, thoroughly clean masonry surfaces of mortar and residue resulting from work of this Section.

C. Begin cleaning operation using commercial masonry cleaner starting from bottom of wall and working to top of wall.

D. Remove splatter, stains, and other foreign matter using manufacturer's approved masonry cleaner.

E. Take special precautions to protect glass, concrete, and other materials from etching and other damage resulting from cleaning agents and methods of cleaning.

F. Rinse with clean water. Leave masonry face surfaces clean, free from mortar residue and stains.

G. Use only low hose pressures and nozzle types to prevent pitting masonry and mortar and to prevent driving moisture into wall.

H. Leave installation clean and free from residue and debris from work of this Section.

END OF SECTION

THIS PAGE INTENTIONALLY LEFT BLANK

SECTION 047300 - MANUFACTURED STONE MASONRY

PART 1 - GENERAL

1.1 SUBMITTALS

A. Shop Drawings: Show the following:
   1. Dimensions, configurations, joints and false joints, details of flashing and other embedded items, and finish treatment.
   2. Location of manufactured stone coordinated with Contract Drawings.

B. Product Data: Manufacturer's descriptive literature for each type of product specified.

C. Selection Samples: For each finish product specified, two complete sets of color sample representing manufacturer's full range of available colors and textures.

D. Verification Samples: For each finish product specified, two samples, minimum size 8 inches square, representing actual product, color, and texture.

E. Manufacturer's Instructions: Include installation instructions, special erection procedures, rough-in dimensions, and conditions requiring special attention.

F. Manufacturer's Certification: Certify products meet or exceed specified requirements.

G. Manufacturer's maintenance instructions that include recommendations for cleaning and repair of components.

1.2 QUALITY ASSURANCE

A. Furnish manufactured stone from a single source.

B. Perform work of Division 04 by or under direct supervision of masonry subcontractor.

C. Mockups for On-Site Verification of Assemblies: Install in accordance with Division 01 Section for Quality Requirements, and the following:
   1. Install as part of mockup with other masonry Sections. Minimum 100 square feet, illustrating complete system used in wall construction, such as anchors, flashing, grouting, mortar joints, and masonry cleaner.
   2. Location: As directed by Architect.
   3. Do not proceed with remaining work until mockup is accepted by Architect.
   4. Identify, protect, and maintain accepted mockup as standard of quality for work of this Section.
   5. Incorporate accepted mockups into Project. Refinish mockup area as required to produce acceptable work.

D. Manufacturer Qualifications: Manufacturer with a minimum of 5 years of documented experience manufacturing manufactured stone masonry specified in this Section.

E. Installer Qualifications: Company with documented experience in installation of manufactured masonry of the type specified, including at least five projects within a 400 mile radius of the Project.

1.3 WARRANTY

A. Warranties shall not deprive Owner of other rights Owner may have by law or under other provisions of the Contract Documents, and will be in addition to and run concurrently with other warranties made under the Contract Documents.

B. Manufacturer Warranty: 50 year limited warranty.

PART 2 - PRODUCTS

2.1 MANUFACTURERS

A. Basis of Design Products: Provide product specified, or Architect-accepted substitution:

1. Boral Stone Products, Cultured Stone (Basis of Design).
2. Boral Stone Products, Eldorado Stone.
3. Boulder Creek Stone Products.
4. Coronado Stone Products.

2.2 REGULATORY REQUIREMENTS

A. Design manufactured stone units withstand loads indicated by Structural Notes and Drawings, applicable Codes, and Reference Standards.

2.3 PERFORMANCE / DESIGN CRITERIA

A. Building Code Compliance:
   1. International Code Council (ICC):
      a. ES Report: ICC ESR 1364
   2. Tested by Underwriters Laboratories, Inc.

B. Backup Wall System and installation method for manufactured stone veneer shall meet the requirements of ASTM C1780 - Standard Practice for Installation Methods for Adhered Manufactured Stone Masonry Veneer.

C. Manufactured Stone Veneer Performance Requirements: Conforming to ASTM C1670 and as follows:
   1. Compressive Strength: Not less than 1800 psi average for 5 specimens and not less than 2100 psi for individual specimen when tested in accordance with ASTM C39 and ASTM C192.
   2. Bond Between Manufactured Masonry Unit, Mortar and Backing: Not less than 50 psi when tested in accordance with ASTM C482 using Type S mortar..
   3. Thermal Resistance: R-value of not less than 0.355 per inch of thickness when tested in accordance with ASTM C177.
   4. Freeze/Thaw: No disintegration and less than 3 percent weight loss when tested in accordance with ASTM C67.
   5. Unit Weight: Not more than 15 psf saturated.
   6. Surface Burning Characteristics: Not more than the following when tested in accordance with UL 723:
      a. Flamespread: 25.
      b. Smoke Development: 450.
   7. UV Stable- Mineral oxide pigments.

D. Special Shapes: As selected by Architect.

PART 3 - EXECUTION

3.1 INSTALLATION

A. Conform to manufacturer and fabricator instructions and provisions of Contract Documents.

B. Manufactured Stone Masonry Veneer Installation:
   1. Install manufactured stone masonry veneer in accordance with MVMA Installation Guide for Adhered Manufactured Stone Veneer, ASTM C1780 and applicable Codes.
   2. Install/apply related materials in accordance with type of substrate and manufactured stone veneer manufacture's installation instructions.
   3. Special Shapes: Color to match stones specified.
      a. Provide stones manufactured specifically for installation at corners.
      b. Install quoins on corners as indicated on the Drawings.
   4. Mortar Joints
      a. Style: Standard 1/2 inch tooled.
      b. Tool all grout joints.
   5. Stone Direction: Random placement.
   6. Windows, Doors and Wall Openings: Butt field stones to wall opening.
   7. Sills: Install sills where indicated on Contract Drawings.
   8. Caps: Install capstones where indicated on Contract Drawings.

C. Seal all joints at wall openings and penetrations with a sealant approved for use with masonry products.

3.2 FIELD QUALITY CONTROL

A. Special Inspections and Testing: Conform to requirements of Division 01, Quality Requirements.

B. Manufacturer's Field Services: Provide periodic site visits as requested by Architect. Report any discrepancies to the Contractor with copies to the Architect within 24 hours of each visit.

END OF SECTION

THIS PAGE INTENTIONALLY LEFT BLANK

SECTION 050560 - WELDING

PART 1 - GENERAL

1.1 SUBMITTALS

A. Written welding procedure (WPS) in accordance with AWS D1.1 requirements for each different welded joint proposed for use at Seismic Critical Welds (complete penetration welds), whether pre-qualified or qualified by testing.
   1. Indicate as-detailed configurations, as well as the maximum and minimum fit-up conditions.
   2. Identify specified electrode and manufacturer.
   3. List actual values of welding parameters to be used so that clear instruction is provided to welders.

1.2 QUALITY CONTROL

A. Welder Qualifications:
   1. AWS qualified.
   2. Certified within previous 12 months for Project location.

PART 2 - PRODUCTS

2.1 MATERIALS

A. Refer to individual Sections, Structural Notes, and Drawings for metals to be welded and additional requirements.

B. Electrodes: Type E70XX or as required to develop strength of particular grade and section welded in accordance with AWS recommendations. Type E80XX at all welded reinforcing steel.

2.2 REGULATORY REQUIREMENTS

A. Conform to requirements of Division 01 Quality Requirements and codes referenced on Drawings, for codes, ordinances, and other regulatory requirements.

B. Conform to AWS for welding codes referenced by this Section.

C. Special Inspections:
   1. Owner will engage an independent testing and inspection agency to perform special inspection of field welded structural members and connections designed to resist loads and forces.

PART 3 - EXECUTION

3.1 WELDING PROCEDURES

A. Clean and weld in accordance with AISC Specifications Chapter J and American Welding Society AWS D1.1, D1.2, D1.3 D1.4, D.6, and other welding standards, as applicable.

B. Electrodes: Type E70XX in accordance with American Welding Society Standards. Electrodes to be thoroughly dry prior to use.

C. Welds at Architecturally Exposed Structural Steel (AESS) and other Exposed-to-View Steel not Necessarily Defined as AESS: Conform to NOMMA, Guideline 1: Joint Finishes, Finish #2.
   1. Make straight, true, and consistent in appearance.
   2. Do not burn or damage appearance of steel.
   3. Remove service metal and piece marks on steel.
   4. Grind exposed to view welded joints smooth.

D. Welds at Concealed Locations or on Structural Steel Items: Conform to NOMMA, Guideline 1: Joint Finishes, Finish #4 accepted.

E. Welding:
   1. Join shape edges as shown on Drawings.
   2. Prepare and clean edges free of oil, grease, scale, and rust in accordance with AWS D1.1 and Structural Notes for type of weld.

F. Reinforcing Steel: Do not weld concrete/masonry reinforcing bar, except as shown on Structural Drawings.

G. Bolted Connections: Do not weld structural connections indicated for bolts, except as accepted by Structural Engineer in writing.

3.2 FIELD QUALITY CONTROL

A. Inspection and Testing by Owner's Special Welding Inspector:
   1. Include: X-ray or gamma ray tests, ultrasonic testing, magnetic particle inspection, and other aids to visual inspections that inspector deems necessary to determine quality of welds.
   2. Perform ultrasonic testing on complete penetration welds.
   3. Non-destructively test complete penetration groove welds larger than 5/16 inch by ultrasonic methods for conformance with weld quality and standard of acceptance of AWS D1.1 for welds subject to tensile stress. Pass sound through entire weld volumes from two crossing directions if possible.

B. Conform to following provisions:
   1. Ultrasonically test base metal thicker than 1-1/2 inches for discontinuities behind welds.
   2. Inspect Seismic Critical Welds:
      a. Verify Welding Procedure (WPS) sheet has been provided and has been reviewed with each welder performing the weld.
      b. Reject welds not executed in conformance with the WPS.
      c. Verify fit-up tolerances meet WPS, and mark joint prior to welding.
      d. Verify welding consumables per WPS.
      e. Verify welding qualifications and identifications.
   3. Observe preheat and inter-pass temperatures, and weld pass sequence for conformance with WPS.
   4. Inspect removal of back-up bars and run-off plates, preparatory grinding and execution of reinforcing fillet.

END OF SECTION

SECTION 055000 - METAL FABRICATIONS

PART 1 - GENERAL

1.1 SUBMITTALS

A. Product Data: Include manufacturer's publications, specifications, instructions, performance criteria, and limitations. Show conformance with specifications.

B. Shop Drawings: Indicate profiles, sizes, connection attachments, reinforcing, anchorage, size and type of fasteners, and accessories. Include erection drawings, elevations, and details, with dimensions as applicable, including field measurements.
   1. Prepare placing plan locating structural connectors.
   2. Include embedded items, including anchor bolts.
   3. Indicate welded connections using standard AWS A2.0 welding symbols. Indicate weld length.

C. Design Data: Submit engineering data for seismic bracing of mechanical components illustrating compliance with design and performance criteria indicated, including comprehensive engineering analysis data, signed and sealed by a Professional Engineer licensed in Project jurisdiction.

D. Certification: Submit certification letter attesting that specified shop finish preparation, procedures, and products, including galvanized plating and SSPC procedures have been followed.

1.2 QUALITY ASSURANCE

A. Fabricator Qualifications: Company specializing in work of this Section with minimum 5 years documented experience.

B. Welders Qualifications: AWS qualified, certified within last 12 months in accordance with Section 050560.

PART 2 - PRODUCTS

2.1 REGULATORY REQUIREMENTS

A. Welding: Conform to provisions of Section 050560.

B. Seismic Design Category: Conform to Structural Notes and ASCE 7.

2.2 MANUFACTURERS, GENERAL

A. Substitutions for Products Specified in this Section: Submit in conformance with provisions specified for substitutions.

2.3 MATERIALS

A. Structural Steel Members: ASTM A572, Grade 50.

B. Other Steel Plate Sections: ASTM A36.

C. Tubular Steel and Pipe: Cold formed hollow structural steel (HSS), ASTM A500 Grade B or hot formed ASTM A501, electric resistance welded (ERW), seamless.

D. Steel Pipe: ASTM A53, Type S, Grade B, standard weight, Schedule 40 seamless.

E. Stainless Steel Sheet and Plate: ASTM A240, Type 304, soft temper, No. 4 finish (standard polish - approximately 150/180 grit).

F. General Purpose Bolts and Studs: ASTM A307 Grade A, B, or C.

G. Bolts for Structural Connections: ASTM A325, Type 3.

H. Exterior Fasteners: ASTM B633 or ASTM F1941.

I. Interior or Concealed Fasteners in Exterior Walls: ASTM B633 or ASTM F1941 zinc-electroplated steel, unless otherwise indicated.

J. Welding Electrodes: Conform to AWS Standards in accordance with Section 050560.

K. Miscellaneous Metal: Provide rolled shapes, bars, sheets, strips, anchors, bolts, washers and other fasteners, accessories, and as detailed or required for complete installations and for support where not specified in other Sections.

L. Non-Shrink Grout:
1. Non-Shrink, Non-Metallic, Aggregate-Free Grout.
2. Compressive Strength: Tested to ASTM C1107/C1107M and ASTM C109/C109M.
3. Minimum 4,000 psi at 28 days.

2.4 MISCELLANEOUS METAL FABRICATIONS

A. Provide welded assemblies of standard shapes and plate for trim, edgings, supports, steel lintels, shelf angles and other support angles and brackets, framing and supports for toilet partitions, mechanical and electrical equipment, closures, frames, loose bearing and leveling plates, and as required to complete the Work.

B. Provide metal items in accurate sizes and shapes, with clean lines and angles with smooth surfaces without noticeable defects.

C. Bolt, drill, tap, punch, and shear to leave clean surfaces.

D. Weld permanent connections in accordance with Section 050560. Grind exposed welds smooth. Conform to NOMMA Guideline 1: Joint Finishes, Finish #2.

E. Joints and Fastenings: Detail for ample strength and stiffness. Where exposed to weather, form to exclude water.

F. Do not use screws or bolts, where avoidable. When used, countersink heads and draw up tight; nick threads to prevent loosening.

G. Provide holes and connections for work of other trades.

2.5 SHOP GALVANIZED FINISHES

A. For all exterior ferrous steel, and where galvanized finishes are specified, provide as follows:

B. Galvanized Structural Steel Members, Plate, Tube, and Pipe: Hot-dip zinc-coat galvanize after fabrication, ASTM A123. Zinc coat galvanize exterior steel, including steel embeds, steel in contact with masonry and concrete, weldments, connectors, and other miscellaneous steel framing exposed to weather, except as otherwise indicated.
1. Up to 3/16 Inch Thick Steel: 2.0 oz average and 1.8 oz minimum.
2. 1/4 Inch and Thicker Steel: 2.3 oz average and 2.0 oz minimum.

C. Galvanized Sheet Steel: As specified by applicable Sections. Where unspecified but shown on Drawings, conform to following.
1. Exterior Exposed Steel: ASTM A653 G90
2. Exterior Steel Protected from Weather: ASTM A653 G60.
3. Interior Steel: ASTM A653 G40.

D. Bolts and Threaded Fasteners: Hot-dip galvanize to ASTM A153, Class C or D.

E. Touch-up for damaged galvanized surfaces to remain unfinished: 95 percent zinc cold galvanizing compound.
1. ZRC Worldwide, Galvilite.
2. ITW Devcon, Devcon Z.
3. ITW LPS Cold Galvanize Corrosion Inhibitor.

2.6 SURFACE PREPARATION FOR SHOP PRIMED STEEL

A. Surface Preparation for Ungalvanized Ferrous Metal to be Shop Primed:
   1. Exterior: Conform to SSPC-SP-6, Commercial Blast Cleaning.
   2. Interior: Conform to SSPC-SP-3, Power Tool Cleaning.

B. Surface Preparation for Galvanized Steel: Conform to ASTM D6386 for preparation of galvanized surfaces prior to application of shop primers and finish coatings directly to galvanized surfaces.
   1. Newly Galvanized Steel:
      a. Within 48 hours of galvanizing, and before zinc oxide or zinc hydroxide formations on surface, clean surfaces of oil and grease.
      b. Smooth high spots and rough edges by sanding or sweep blasting.
      c. Apply zinc-phosphate treatment or other acceptable adhesion promoter.
   2. Partially weathered Galvanized Steel:
      a. Test for and remove chromatic conversion coatings that may have been applied at factory.
      b. Clean surfaces of oil and grease. Smooth high spots and rough edges by sanding or sweep blasting.
      c. Remove wet storage stain using a mild ammonia solution, rinse with water, and air blow dry.
      d. Apply paint coating within 30 minutes before zinc oxides begin to reform or apply zinc-phosphate treatment or other acceptable adhesion promoter.
   3. Weathered Galvanized Steel:
      a. After 1-1/2 to 2 years following formation of a hard zinc-carbonate surface, clean surfaces of oil, grease, and loose particles.
      b. Smooth high spots and rough edges by sanding or sweep blasting.
   4. Do not apply alkyd primers or coatings directly to galvanized surfaces.

2.7 SHOP PRIMERS FOR PAINTED/COATED STEEL

A. Interior Structural Steel in Concealed Spaces: Do not apply primers to structural steel hot-rolled and plate sections in concealed spaces, in conformance with AISC guidelines, including AISC Architects Guide

B. Shop Priming: Prepare surfaces and apply primers as specified in Section 099000.

C. Where not otherwise indicated, assume the following product type, and verify with Architect:
   1. Products: Provide the following, or Architect-approved substitution.
      a. Tnemec, Uni-Bond, Self-Crosslinking Acrylic, Corrosion-Resistant Primer Series 115.

D. Surface Preparation for Aluminum: ASTM D1730, as applicable for coating system.
   1. Type A-Solvent Cleaning.
   2. Type B-Chemical Treatments.
   3. Type C-Anodic Treatments: Method 1 or Method 2 accepted.
   4. Type D-Mechanical Treatments.

E. Primer: As indicated on manufacturer's published data sheets and as accepted by Architect.

F. Clear Coated Steel Fabrications: Conform to SSPC-SP-6, Commercial Blast Cleaning, ready for work Section 099000.

G. Unfinished Steel Fabrications: Leave light natural oil factory coating. Grind weldments smooth. Power tool clean to SSPC-SP3 removing rust and staining. Leave in unfinished condition.

2.8 SOURCE QUALITY CONTROL

A. Shop Primed Metal to Receive Finish Coatings under Work Other Sections: Free of drips and other imperfections causing telegraphing through finished coating.

PART 3 - EXECUTION

3.1 INSTALLATION

A. Conform to manufacturer's instructions and provisions of Contract Documents.

B. Protect against galvanic action from uncoated dissimilar metals. Separate dissimilar metals using isolation tape, gaskets, or coatings, as acceptable to manufacturer and Architect. Except as otherwise indicated, embed (uncoated portion) of steel items into concrete and steel inserts with specified non-shrink grout.

C. Cast-in Items: Install accurately and securely to detail.

D. Steel in Cast-In Sleeves In Concrete: Set into place with non-shrink grout.
   1. Mix non-shrink, aggregate grout to optimal fluid, flowable, or plastic consistency as necessary for solid grouting and repair. Trowel grout at plastic consistency at voids and around pipe penetrations to fill voids and to match adjacent surfaces.

E. Fabricated Items: Install plumb and true to line. Anchor securely in place.

F. Miscellaneous: Install metal items and fabrications as required to fully complete the Work whether specifically indicated or not.

G. Install seismic and other bracing as recommended by manufacturers and as required for stability, extending and fastening members to supporting structure.

3.2 TOUCH-UP AFTER INSTALLATION

A. After installation and erection, remove weld spatter, grind smooth, and clean steel of oil and grease in accordance with SSPC-SP-1. Clean abraded, bolted, and welded areas.

B. Damaged Shop Primed Ferrous Metal Surfaces: Reapply specified shop primer to make free of scratches and stains.

C. Damaged Galvanized Surfaces to Receive Finish Coating: Touch up with specified organic, zinc rich, urethane primer.

D. Damaged Galvanized Surfaces to remain Unfinished: Touch up with specified cold galvanizing compound.

E. Site Welding: Clean and strip primed steel to bare metal where site welding is required and apply touch-up primer or cold galvanizing compound as specified in Section 099000.

END OF SECTION

SECTION 060573.13 - FIRE-RETARDANT WOOD TREATMENT

PART 1 - GENERAL

1.1 SUBMITTALS

A. Combined Submittals: Submit items required below as combined submittals with Sections 060573.33 and 061000.

B. Product Data: Manufacturers data sheets indicating performance characteristics and limitations. Include flame spread, smoke toxicity, and smoke developed test results.
   1. Physical Properties:
      a. Moisture Preservative Properties: Effect against fungal decay and insects.
      b. Corrosive Properties: Show as non-corrosive to metal.
      c. Ratings for Structural Use at Elevated Temperatures: Compared to untreated lumber and plywood.
      d. Nail Holding Properties: Compared to untreated lumber and plywood.

C. Samples: Where finish samples are required by other Sections, provide 6-inch-long samples of treated wood for finishing.

D. Evaluation Reports: For test results of fire performance, strength, non-corrosive, and hygroscopic properties of fire retardant treated wood products.

E. Manufacturer Instructions: Include installation requirements, use of fire retardant treated wood products, and cutting limitations.

F. Certificate: Wood treated wood supplier certificate of conformance to provisions of Contract Documents.

1.2 QUALITY ASSURANCE

A. Treatment Plant: Licensed by manufacturer of fire retardant treatment material.

B. Source Quality: Obtain fire retardant treatment from a single manufacturer.

PART 2 - PRODUCTS

2.1 REGULATORY REQUIREMENTS

A. Conform to Chapter 23 of building code for fire-retardant-treated wood.

2.2 LUMBER AND PLYWOOD

A. Service Conditions and Use Category: Conform to AWPA U1 UCFA Type A and manufacturer's evaluation report.

B. Label and identify each piece in conformance to Chapter 23 of building code and in conformance with provisions of this Section.

C. Adjust manufacturer's values to conform to specified performance rating where design values are reduced by fire-resistive treatment.

D. Kiln dry after treatment to 19 percent maximum moisture content for lumber and 15 percent for plywood.

E. Cut and dress, S4S, before treatment to eliminate other than end cuts and as required to maintain fire-resistance.

2.3 FIRE RETARDANT TREATMENT

A. Rated by the National Evaluation Service, Inc. for structural use at elevated temperatures.

B. Fire Rating: UL FR-S Classification, ASTM E84, NFPA 255, or UL 723, extended 30 minute tunnel test.
   1. Flame Spread: 25 or less.
   2. Smoke Developed: 50 or less

3. Smoke Toxicity: No more than that of untreated wood.

C. Progressive Combustion: No evidence of significant progressive combustion of flame front extending more than 10.5 feet from the center line of the burner when test is extended for 20 additional minutes (30 minutes total).

D. The use of paints, coating, stains or other surface treatments are not an approved method of protection as required in this Section.

2.4 FIRE RETARDANT CHEMICALS

A. Treatment Formulation:
1. Conform to formulation FR-1 of the current edition of AWPA Standard P17.
2. Free of halogens, sulfates, chlorides, and ammonium phosphate.

B. Registered for use as a wood preservative by the U.S. Environmental Protection Agency (EPA) for nominal resistance against termites and fungal decay at interior conditions, not subject to wet conditions.

C. Corrosion Properties: Exhibit corrosion rates less than 1 mil (0.025 mm) per year when tested in conformance to Fed. Spec. MIL-L-19140, Paragraph 4.6.5.2.Fire retardant treated wood in contact with carbon steel, galvanized steel, aluminum, copper and red brass.

2.5 FASTENERS

A. Hot-dip galvanized steel, stainless steel, or other corrosion resistant material in conformance to manufacturer's instructions.

PART 3 - EXECUTION

3.1 FIELD CUTTING

A. Lumber:
1. Do not rip or mill lumber following fire retardant treatment.
2. Permitted: End cuts, drilling of holes, and joining cuts.

B. Plywood: Cutting permitted.

3.2 INSTALLATION

A. Conform to manufacturer's instructions and provisions of Contract Documents.

B. Fire Retardant Treated Lumber: Provide where fire retardant wood framing, furring, blocking, and miscellaneous wood is required, conforming to Chapter 23 of building code and requirements of authorities having jurisdiction.

C. Fire Retardant Treated Plywood: Provide where fire retardant plywood roof sheathing, subflooring, and other plywood is required, conforming to Chapter 23 of building code and requirements of authorities having jurisdiction.

D. Application: Treat items indicated and the following:
1. Concealed blocking.
2. Plywood backing panels.

END OF SECTION

SECTION 060573.33 - PRESERVATIVE WOOD TREATMENT

PART 1 - GENERAL

1.1 SUBMITTALS

A. Combined Submittals: Submit items required below as combined submittals with Section 061000.

B. Product Data:
1. Published characteristics, chemical composition, and performance data for each proposed product.
2. Description of product uses and limitations.
3. Recommendations for types of metal fasteners and connectors to control corrosion.
4. AWPA conformance standards.

C. Evaluation Report: For treatment type and use.

1.2 QUALITY ASSURANCE

A. Treatment Plant Qualifications:
1. Company specializing in work of this Section with minimum 3 years documented experience.
2. Conforming to ALSC Treated Wood Enforcement Regulations, as inspected by ALSC accredited inspection agency.
3. Licensed by preservative treatment manufacturer.

PART 2 - PRODUCTS

2.1 REGULATORY REQUIREMENTS

A. Conform to Chapter 23 of building code for preservative-treated wood.

2.2 FACTORY PRESERVATIVE TREATED WOOD

A. Preservative Chemical Treatment: Comply with the applicable requirements of authorities having jurisdiction, applicable AWPA Standards and the Use Category system.
1. UC2: Provide for interior construction not in contact with ground.
2. UC3A Above Ground Protected: Provide for exterior coated construction not in contact with ground and that allows water to quickly drain from the surface.
3. UC3B: Provide for exterior construction not in contact with ground, and assemblies where any part of the components require this designation.
4. UC4A: Provide for items where any part is in contact with the ground unless indicated otherwise.

B. Kiln dry wood after treatment (KDAT):
1. Lumber: Maximum 19 percent moisture content.
2. Plywood: Maximum 16 percent moisture content.

C. Stamp or label preservative treated wood in conformance with requirements of authorities having jurisdiction. Identify:
1. Manufacturer, type of preservative treatment, minimum preservative retention, AWPA Standard for treatment type and use.
2. ALSC accredited inspection agency maintaining quality control supervision, testing, and inspection of treatment.

2.3 METAL FASTENERS AND CONNECTORS IN CONTACT WITH PRESERVATIVE TREATED WOOD

A. Structural Carbon Steel Connectors:
1. Exceeding 14 Gauge: Hot-dip galvanize to ASTM A123, as specified in Section 055000.
2. Less than 14 Gauge:
   a. Exterior Use: Galvanize to ASTM A653, G185.
   b. Interior Use: Galvanize to ASTM A653 G90.

B. Carbon Steel Fasteners and Anchors:
   1. Exterior Use: Hot-dip galvanize to ASTM A153 G185. Electro-Galvanized Coatings: Not accepted.
   2. Interior Use: Galvanize to ASTM A153 G90, except G60 galvanizing permitted where moisture will not come in contact with fasteners.

C. Stainless Steel: 300 series accepted in lieu of galvanized carbon steel.

PART 3 - EXECUTION

3.1 SURFACE TREATMENT OF FIELD CUTS

A. Conform to AWPA M4 and manufacturer instructions.

B. Lumber: Treat wood with oil-soluble copper naphthenate based wood preservative, or as accepted by Architect.

3.2 INSTALLATION OF PRESERVATIVE TREATED WOOD

A. Treat in accordance with AWPA, manufacturer's instructions, and provisions of Contract Documents.

B. Install preservative treated wood where in contact with concrete, and conditions subject to moisture, including at foundation sill plates, masonry, roofing, and wood in direct and continual contact with moisture and dampness.

C. Treat end cuts of preservative treated wood members with field-applied end coat prior to installation.

D. Install under work of applicable Sections, including but not limited to the Work of Section 061000.

END OF SECTION

SECTION 061000 - ROUGH CARPENTRY

PART 1 - GENERAL

1.1 SUBMITTALS

A. Combined Submittals: Submit items required below as combined submittals with Sections 060573.13 and 060573.33.

B. Product Data: Manufacturer's product literature for fasteners, vapor barrier tape, and building paper.

C. Certificates: Indicating compliance with specified requirements.

D. Product Test Reports: Evaluation reports or test reports for each type of fastener, acceptable to authorities having jurisdiction.

1.2 QUALITY ASSURANCE

A. Evidence of Grade: Conform to DOC PS 20 and requirements of authorities having jurisdiction.
   1. Rough Lumber: Stamp each piece of lumber and plywood with grademark and trademark of Association having jurisdiction.
   2. In Lieu of Grade Stamping Exposed to View Lumber: Certify by manufacturer that products meet or exceed specified requirements.

PART 2 - PRODUCTS

2.1 REGULATORY REQUIREMENTS

A. Wood Materials and Fasteners: Conform to building code indicated.
   1. Softwood Lumber Grading Rules: Conform to standards establishing sizes and quality in conformance to DOC PS 20.
   2. Wood Structural Panels: Conform to DOC PS 1 or DOC PS 2 as applicable.

B. Preservative Treatment: Specified in Section 060573.33.

C. Fire-Retardant Treatment: Specified in Section 060573.13.

2.2 PERFORMANCE / DESIGN CRITERIA

A. Moisture Content:
   1. Certify that lumber and wood panels (surface dry, surface green, and kiln dried) contain no more than 15 percent moisture content when delivered to site.
   2. Monitor moisture content of in-place wood and take remedial action to lower unacceptable moisture content.

2.3 LUMBER MATERIALS

A. Lumber Grading Rules: WWPA or WCLIB based on DOC PS 20.

B. Structural Lumber: Conform to Structural Drawings for wood framed construction subject to structural loading. Include framing of wood stairs in the work of this Section.

C. Non-Structural Framing Lumber: Include wood framed construction and components not subject to structural loading as defined by Structural Drawings.
   1. Species: Douglas Fir-Larch South, or Hem-Fir.
   2. Grade: WWPA or WCLIB, No. 2.

D. Condition of Seasoning (Moisture Content):
   1. Nominal 2 inch Thickness: S-DRY, 15 percent maximum moisture content.
   2. Nominal 4 inch Thickness or Greater: S-GRN. Air dry to 15 percent maximum moisture content.

2.4 WOOD PANEL PRODUCTS

A. General, Except Where Otherwise Indicated:
   1. APA Grade Stamp each panel. Conform to DOC PS 1 and DOC PS 2 for cross-laminated veneer panel.
   2. APA A-A Group 1, Exposure 1: Where face exposed both sides.
   3. APA PS 1, A-D Group 1, Exposure 1: Face exposed one side.
   4. APA, Exterior: Provide in lieu of Exposure 1 where panels are subject to permanent weather exposure or prolonged weather exposure of 6 months or more prior to covering with weathertight construction.
   5. Panel Boards: Fire retardant treated APA C-D plugged, Exposure 1, 15/32 inch thick. Fire retardant treat, conforming to Section 060573.13.

B. Structural Panel Products: As indicated by Structural.

2.5 FASTENERS

A. Conform to manufacturer's ICC ES Evaluation Reports, manufacturer's written instructions including load tables, and requirements indicated.

B. Fastener Types, Sizes, Spacing, and Quantities: Provide fasteners and connectors including nails, spikes, screws, clips, bolts, and anchors required for installation of carpentry and millwork, conforming to Chapter 23 building code table entitled "Fastening Schedule", APA recommendations, and as indicated.

C. Nails, Spikes, Staples and Other Driven Fasteners: Conform to ASTM F1667.

D. Bolts and Lag Bolts: Provide steel plate washers.

2.6 ANCHORS

A. Conform to Structural Drawings, submitted test reports or Evaluation Reports, and manufacturer's instructions, including manufacturer's tables indicating design loads and recommended use for each fastener type.

B. Floor Plate and Sill Anchors: Conform to Chapter 23 of building code, and to Structural Drawings.
   1. 1/2 to 5/8 inch galvanized steel bolts or anchors embedded minimum 7 inch into concrete and spaced as indicated on Structural Drawings.
   2. Provide at least 2 bolts or anchor straps at each plate located not more than 12 inch and not less than 4 inch from each end.
   3. Bolt and tighten plate to foundation with nut and washer.

C. Bar or Strap Anchors: Conform to Structural Drawings.

2.7 ROUGH HARDWARE

A. Framing Anchors, Beam, and Post Connectors: Designed to support imposed loads, conforming to Structural Drawings, or as approved by Architect.

B. Joist and Rafter Hangers: Conform to Chapter 17 of building code, and Structural Drawings, as tested to ASTM D1761, for vertical load-bearing capacity, torsional moment capacity, and deflection characteristics. See Structural Drawings.

C. Plywood Panel Edge Clips: 20 gauge steel, ASTM A653G-60 galvanized. Size and type to prevent differential movement of adjacent edges of sheathing between supports and as recommended by APA.
   1. Simpson Strong-Tie PSCL.
   2. United Steel Products (USP), PC.

2.8 ACCESSORIES

A. Construction Adhesives: Solvent based, conforming to APA Specification AFG-01.

B. Pressure Treated Items: Preservative pressure treat wood members contacting concrete, masonry, and at exterior conditions, as specified Section 060573.33.

2.9 FASTENER MATERIALS AND FINISHES

A. Carbon Steel Fasteners, Anchors, Straps, and Rough Hardware: ASTM A123 or ASTM A153, hot-dip galvanized.
   1. Exterior Steel in Contact with Concrete: G90, except G180 where in contact with preservative treated wood. Simpson ZMAX/HDG, specified for type and quality. Stainless steel also accepted.
   2. Interior Steel: G40 in dry conditions, G60 where subject to wetting, except G180 where in contact with preservative treated wood. Simpson ZMAX/HDG, specified for type and quality. Stainless steel also accepted.

B. Stainless Steel Fasteners and Anchors: ASTM F593 Group 1 (Type 304) or Group 2 (Type 316).

C. Electrolysis Protection: Isolate metal in contact with metals of dissimilar galvanic range by isolation methods including application of suitable primers, paints, or tapes.

PART 3 - EXECUTION

3.1 INSTALLATION

A. Verify conditions ready to receive work of this Section before proceeding.

B. Conform to Chapter 23 of building code, Drawing notes and other requirements as indicated, and requirements of authorities having jurisdiction.

C. Lay out, cut, fit, and install rough carpentry construction. Set level, plumb, aligned, and in correct position.

D. Partition Wall Heights: Extend full height to underside of roof deck.

E. Temporary Bracing: Make provisions for erection loads, sufficient to maintain structure safe, plumb, and in true alignment until completion of erection and installation of permanent bracing and framing.

F. Horizontal Members: Place crown side up.

G. Header and Trimmers: Double members around openings in vertical and horizontal framing, except as otherwise shown on Drawings.

H. Double Joist Headers: Construct at floor and ceiling openings and under stud walls that are parallel to floor joists, except as otherwise shown on Drawings. Frame headers rigidly into joists.

I. Load Bearing Members: Install full length without splices.

J. Joists and Beam Bearings: Install using engineered joist hangers, except as otherwise shown on Drawings

K. Bridging and Blocking: Install at joists and framing in excess of 8 feet, except otherwise shown on Drawings. Fit solid blocking at ends of members. Refer to Drawings for venting through solid blocking.

L. Plates, Caps, Ledgers, and End Studs: Anchor to concrete and masonry construction with anchors spaced 32 inch to 48 inch on center, with at least two anchors in each piece, and no more than 12 inch or less than 4 inch from each end.
   1. Concrete: 5/8 inch bolts, unless otherwise shown on Drawings.
   2. Masonry and Steel: 3/4 inch bolts, unless otherwise shown on Drawings.

M. Curbs and Nailers: Pressure treated, dimensions as indicated or required.

N. Fire Blocking: Construct nominal 2 inch thick solid lumber at ceiling line. Construct at mid-height between studs, where partition height exceeds 8 foot. Do not exceed 10 foot on center vertical spacing.

O. Dressed Wood Grounds: Set for securing wood trim, base, and millwork. Install to be secure rigid, straight, true, and aligned.

P. Shims: Do not use shims for leveling on wood or metal bearings.

Q. Wood Backing:
   1. Provide for secure installation and support of work of other Sections, such as for casework, hardware, plumbing, heating, ventilating, and electrical work.

2. Accepted for installation at metal stud partitions as well as for wood framing.

3.2 PANEL BOARDS

A. Provide panel boards and backings for support of Mechanical and Electrical work.

B. Use fire-retardant plywood for Electrical panel boards.

C. Oversize panel boards 12 inches beyond mounting requirements

3.3 FASTENERS

A. Provide nails, spikes, screws, and bolts as necessary for secure and rigid permanent connections. Conform to Chapter 23 building code table entitled "Fastening Schedule", APA recommendations, and as indicated.

B. Anchors: Anchor plates, caps, and wood framing to other construction with anchors spaced 48 inch on center and with each item anchored with at least two anchors.

C. Drive nails perpendicular to grain of wood in lieu of toe nailing, where feasible.

3.4 SITE-APPLIED WOOD TREATMENT

A. Cuts in Preservative Treated Wood: Field-apply wood preservative treatment to comply with Section 060573.33.

B. Allow to dry before erecting members.

END OF SECTION

SECTION 061636 - WOOD SHEATHING

PART 1 - GENERAL

1.1 SUBMITTALS

A. Product Data: For each type of process and factory-fabricated product. Indicate component materials and dimensions and include construction and application details.
   1. Include data for wood-preservative treatment from chemical treatment manufacturer and certification by treating plant that treated plywood complies with requirements. Indicate type of preservative used and net amount of preservative retained.
   2. Include data for fire-retardant treatment from chemical treatment manufacturer and certification by treating plant that treated plywood complies with requirements. Include physical properties of treated materials.
   3. For fire-retardant treatments, include physical properties of treated plywood both before and after exposure to elevated temperatures, based on testing by a qualified independent testing agency according to ASTM D5516.
   4. For products receiving waterborne treatment, include statement that moisture content of treated materials was reduced to levels specified before shipment to Project site.
   5. Evaluation Reports: For the following, from ICC-ES:
      a. Wood-preservative-treated plywood.
      b. Fire-retardant-treated plywood.

1.2 QUALITY ASSURANCE

A. Testing Agency Qualifications: For testing agency providing classification marking for fire-retardant-treated material, an inspection agency acceptable to authorities having jurisdiction that periodically performs inspections to verify that the material bearing the classification marking is representative of the material tested.

B. Manufacturer Qualifications: A qualified manufacturer that is certified for chain of custody by an FSC-accredited certification body.

C. Vendor Qualifications: A vendor that is certified for chain of custody by an FSC-accredited certification body.

PART 2 - PRODUCTS

2.1 PERFORMANCE REQUIREMENTS

A. Fire-Resistance Ratings: As tested according to ASTM E119; testing by a qualified testing agency. Identify products with appropriate markings of applicable testing agency.
   1. Fire-Resistance Ratings: Indicated by design designations from UL's "Fire Resistance Directory" or from the listings of another qualified testing agency.

2.2 WOOD PANEL PRODUCTS

A. Thickness: As needed to comply with requirements specified, but not less than thickness indicated on Structural Drawings.

B. Factory mark panels to indicate compliance with applicable standard.

2.3 FIRE-RETARDANT-TREATED PLYWOOD

A. General: Where fire-retardant-treated materials are indicated, use materials complying with requirements in this article that are acceptable to authorities having jurisdiction and with fire-test-response characteristics specified as determined by testing identical products per test method indicated by a qualified testing agency.

B. Fire-Retardant-Treated Plywood by Pressure Process: Products with a flame-spread index of 25 or less when tested according to ASTM E84, and with no evidence of significant progressive combustion when the test is

extended an additional 20 minutes, and with the flame front not extending more than 10.5 feet beyond the centerline of the burners at any time during the test.
1. Use treatment that does not promote corrosion of metal fasteners.
2. Exterior Type: Treated materials shall comply with requirements specified above for fire-retardant-treated plywood by pressure process after being subjected to accelerated weathering according to ASTM D2898. Use for exterior locations and where indicated.
3. Interior Type A: Treated materials shall have a moisture content of 28 percent or less when tested according to ASTM D3201/D 3201M at 92 percent relative humidity. Use where exterior type is not indicated.
4. Design Value Adjustment Factors: Treated lumber plywood shall be tested according to ASTM D5516 and design value adjustment factors shall be calculated according to ASTM D6305. Span ratings after treatment shall be not less than span ratings specified. For roof sheathing and where high-temperature fire-retardant treatment is indicated, span ratings for temperatures up to 170 deg F shall be not less than span ratings specified.

C. Kiln-dry material after treatment to a maximum moisture content of 15 percent. Do not use material that is warped or does not comply with requirements for untreated material.

2.4 WALL SHEATHING

A. Oriented-Strand-Board Sheathing: DOC PS 2, Exposure 1sheathing.
1. Span Rating: Not less than 24/16.
2. Nominal Thickness: Not less than 7/16 inch.

2.5 ROOF SHEATHING

A. Oriented-Strand-Board Sheathing: DOC PS 2, Exposure 1sheathing.
1. Span Rating: Not less than 24/16.
2. Nominal Thickness: Not less than 7/16 inch.

2.6 SUBFLOORING AND UNDERLAYMENT

A. Oriented-Strand-Board Combination Subfloor-Underlayment: DOC PS 2, Exposure 1 single-floor panels.
1. Span Rating: Not less than 24.
2. Nominal Thickness: Not less than 23/32 inch.
3. Edge Detail: Tongue and groove.
4. Surface Finish: Fully sanded or resin-impregnated overlay face.

2.7 FASTENERS

A. General: Provide fasteners of size and type indicated that comply with requirements specified in this article for material and manufacture.
1. For roof and wall sheathing, provide fasteners with hot-dip zinc coating complying with ASTM A153/A 153M.

B. Nails, Brads, and Staples: ASTM F1667.

C. Power-Driven Fasteners: Fastener systems with an evaluation report acceptable to authorities having jurisdiction, based on ICC-ES AC70.

D. Screws for Fastening Sheathing to Wood Framing: ASTM C1002.

E. Screws for Fastening Wood Structural Panels to Cold-Formed Metal Framing: ASTM C954, except with wafer heads and reamer wings, length as recommended by screw manufacturer for material being fastened.
1. For steel framing from 0.033 to 0.112 inch thick, use screws that comply with ASTM C954.

F. Screws for Fastening Composite Nail Base Insulated Roof Sheathing to Metal Roof Deck: Steel drill screws, in type and length recommended by sheathing manufacturer for thickness of sheathing to be attached, with organic-polymer or other corrosion-protective coating having a salt-spray resistance of more than 800 hours according to ASTM B117. Provide washers or plates if recommended by sheathing manufacturer.

2.8 ACCESSORIES

A. Joint and Penetration Treatment Materials: As recommended for indicated use.

B. Multipurpose Construction Adhesive: Formulation complying with ASTM D3498 recommended for indicated use by adhesive manufacturer.

C. Miscellaneous Accessories: Provide as required for complete installation.

2.9 MISCELLANEOUS MATERIALS

A. Adhesives for Field Gluing Panels to Wood Framing: Formulation complying with APA AFG-01 or ASTM D3498 that is approved for use with type of construction panel indicated by manufacturers of both adhesives and panels.

PART 3 - EXECUTION

3.1 INSTALLATION, GENERAL

A. Do not use materials with defects that impair quality of sheathing or pieces that are too small to use with minimum number of joints or optimum joint arrangement. Arrange joints so that pieces do not span between fewer than three support members.

B. Cut panels at penetrations, edges, and other obstructions of work; fit tightly against abutting construction unless otherwise indicated.

C. Securely attach to substrate by fastening as indicated, complying with the following:
   1. Table 2304.9.1, "Fastening Schedule," in the ICC's International Building Code.
   2. ICC-ES evaluation report for fastener.

D. Use common wire nails unless otherwise indicated. Select fasteners of size that will not fully penetrate members where opposite side will be exposed to view or will receive finish materials. Make tight connections. Install fasteners without splitting wood.

E. Coordinate wall and roof sheathing installation with flashing and joint-sealant installation so these materials are installed in sequence and manner that prevent exterior moisture from passing through completed assembly.

F. Do not bridge building expansion joints; cut and space edges of panels to match spacing of structural support elements.

G. Coordinate sheathing installation with installation of materials installed over sheathing so sheathing is not exposed to precipitation or left exposed at end of the workday when rain is forecast.

3.2 WOOD STRUCTURAL PANEL INSTALLATION

A. General: Comply with applicable recommendations in APA Form No. E30, "Engineered Wood Construction Guide," for types of structural-use panels and applications indicated.

B. Fastening Methods: Fasten panels as indicated below:
   1. Combination Subfloor-Underlayment:
      a. Glue and nail to wood framing.
      b. Space panels 1/8 inch apart at edges and ends.
   2. Subflooring:
      a. Glue and nail to wood framing.
      b. Space panels 1/8 inch apart at edges and ends.
   3. Wall and Roof Sheathing:
      a. Nail or staple to wood framing.
      b. Space panels 1/8 inch apart at edges and ends.
   4. Underlayment:
      a. Nail or staple to subflooring.
      b. Space panels 1/32 inch apart at edges and ends.

c. Fill and sand edge joints of underlayment receiving resilient flooring immediately before installing flooring.

SECTION 061755 - METAL PLATE CONNECTED WOOD TRUSSES

PART 1 - GENERAL

1.1 SUBMITTALS

A. Submit under provisions of Section 013300 and as required by IBC Section 2303.4.1 "Truss Design".

A. Shop Drawings: Include following for each truss:
   1. Lumber species, sizes, and stress grades for each member.
   2. Truss slopes, spans, camber configurations, and spacing.
   3. Metal connector plate types, sizes, thickness or gauges, locations, and design values. Include connection requirements for:
      a. Truss to truss girder.
      b. Truss ply to ply.
      c. Field splices.
   4. Bearing widths and locations. Include lifting locations.
   5. Design Data: Show forces on truss construction documents or on supplemental documents,
      a. Live loads and dead loads for top and bottom chords.
      b. Concentrated loads and points of application.
      c. Wind and seismic load criteria.
      d. Adjustments to lumber and metal plate design value for conditions of use.
      e. Each reaction force, location, and direction.

B. Product Data: Include fabricator's standard truss configurations, bearing and anchor details, bridging, bracing, connectors, and components of design.

C. Design Data: Structural calculations stamped with seal and signature of professional engineer registered in Project location.
   1. Calculated deflection ratio or maximum deflection for live and total loads.
   2. Maximum axial compression forces in truss members as required to design size, connections, and anchorage of permanent continuous lateral bracing.
   3. Required permanent truss member bracing locations.

D. Manufacturer Instructions: Include storing, handling, lifting, and installation procedures.

1.2 QUALITY ASSURANCE

A. Manufacturer Qualifications:
   1. Specializing in work of this Section with minimum 3 years documented experience in design and fabrication of commercial quality engineered wood trusses.
   2. Member of Truss Plate Institute (TPI) and accepted by Building Code Regulatory Authority having jurisdiction.
   3. Retain IBC/ICC approved independent inspection agency to make unscheduled inspections of complete manufacturing process as required by IBC Section 2303.4 "Labeling".
   4. Employ professional engineering services experienced in design of wood trusses.

B. Design trusses under direct supervision of professional structural engineer, employed by fabricator, experienced in design of this work.

C. Truss Identification Markings: Permanently mark each truss within 2 foot or center or span on face of bottom chord. Identify truss manufacturing plant, design loads, deflection, and truss spacing.

D. Lumber Grade Marks: Conform to IBC Section 2303 and DOC PS20. Identify lumber by WWPA, or WCLIB grade marks containing symbol of grading agency, mill number or name, grade of lumber, species or species grouping or combination designation, rules under which graded, and condition of seasoning at time of manufacture.

E. Field Alterations: Where not included in shop drawings and other submittals, bridging, penetrations, cutting, and suspending of equipment from trusses require review and acceptance in writing by truss manufacturer and Architect. Truss manufacturer shall provide revised calculations for the approved alteration.

PART 2 - PRODUCTS

2.1 MANUFACTURERS

A. Manufacturers: Provide products from one of the following, or approved substitution.

B. Truss-Span

C. Oso Lumber and Hardware, Truss Division

D. Alpine Engineered Products, Inc.

E. MiTek Industries, Inc.

F. Truswal Systems.

G. Approved Substitutions: Architect-approved equal products submitted as specified for substitutions.

2.2 REGULATORY REQUIREMENTS

A. Conform to IBC Chapter 23 and requirements of Building Code Regulatory Authority having jurisdiction.

2.3 PERFORMANCE / DESIGN CRITERIA

A. Design and Fabrication: Conform to requirements of ANSI/TPI 1as required to meet or exceed performance requirements tested to ANSI/TPI 2.

B. Prepare truss construction documents by professional engineer registered in the state of Utah, conforming to IBC Section 2303.4.1. Submit to Architect for review prior to submitting to Building Code Regulatory Authority having jurisdiction.

C. Roof Design Loads: Conform Structural Drawings and to IBC Section 1607.12 for minimum uniformly distributed loads and minimum concentrated live loads of IBC Table 1607.1 for Occupancy or Use.

D. Deflection: Maximum L/360.

2.4 MATERIALS

A. Wood Truss Members:
1. Species, Grade, and Design Values: Conform to DOC PS20 and as required for structural design.
2. Moisture Content: 7 percent to 16 percent.
3. Surfaced four sides (S4S).
4. Lumber Grading Rules: WWPA or WCLIB in accordance with published values accepted by American Lumber Standards Committee.

B. Steel Connector Plates: Conform to ANSI/TPI 1.
1. Steel: Minimum 20 gauge sheet steel; meeting or exceeding ASTM A653 Grade 37.
2. Galvanizing: Hot-dip galvanized, ASTM A653, G60.
3. Connectors: Die stamped integral teeth or prongs; uniformly spaced and formed.

2.5 ACCESSORIES

A. Wood Blocking, Plating, Support Members, and Framing at Openings: Conform to requirements of Section 061000.

B. Fasteners and Anchors: Hot-dip galvanized ASTM A153, Class C or D. Conform to Structural Notes and Drawings.
1. Hollow Masonry: Toggle bolt type or epoxy capsule anchor.
2. Solid Masonry and Concrete: Expansion shield and lag bolt.
3. Steel: Bolt or ballistic fastener.

C. Steel Bearing Plates: Hot-dip galvanized ASTM A123.
1. 1/8 Inch & Up to 3/16 Inch Thick Steel: 2.0 oz average and 1.8 oz minimum.
2. 1/4 Inch & Thicker Steel: 2.3 oz average and 2.0 oz minimum.

2.6 FABRICATION

A. Fabricate trusses to achieve structural requirements indicated by Contract Documents.

B. Conform to ANSI/TPI 1 Section 4 for fabrication requirements and tolerances.

C. Brace wood trusses for support in accordance with TPI HIB.

D. Fabricate with tight joints. Cut members to accurate length, angle, and size.

E. Provide top and bottom cord extensions where indicated.

F. Fabricate to achieve full bearing at supports required for design loads, spans, and other design criteria.

2.7 FABRICATION TOLERANCES

A. Connector Locations: Toothed connections 1/4 inch from location shown on Shop Drawings.

B. Length of Members:
   1. 20 Foot and Less: 1/16 inch.
   2. Over 20 Foot: 1/16 inch per 20 foot of specified length.
      a. Square End Cuts: Square within 1/16 inch per foot of depth and width.
      b. Openings Between Members of Assembled Trusses:
   3. Tension Members: Maximum 1/16 inch.
   4. Compression Members: Maximum 1/32 inch.

PART 3 - EXECUTION

3.1 INSTALLATION

A. Conform to IBC requirements, TPI Reference Standards, manufacturer's instructions, and provisions of Contract Documents.

B. Hoist trusses into position with cables or spreader bars secured at designated lift points.

C. Make provisions for erection loads, and for sufficient temporary bracing to maintain structure plumb, and in true alignment until completion of erection and installation of permanent bracing.

D. Brace and support to prevent out-of-plane bending of trusses.

E. Do not field cut, drill, or otherwise alter truss members, except as accepted in writing from truss manufacturer and Architect.

F. Install permanent bracing and related components before loading trusses.

G. Frame openings between trusses with lumber under work of Section 061000.

H. Coordinate placement of roof sheathing with work of this Section.

3.2 ERECTION TOLERANCES

A. Truss Framing Members: Maximum 1/2 inch from true position.

END OF SECTION

THIS PAGE INTENTIONALLY LEFT BLANK

SECTION 062000 - FINISH CARPENTRY

PART 1 - GENERAL

1.1 SUBMITTALS

A. Shop Drawings, Product Data, Samples.
   1. Show materials, profiles, dimensions, fastening methods, jointing details, and adjacent materials.
   2. Include scaled drawings at not less than 1 inch to 1 foot for fabricated items.
   3. Indicate field finish treatment under work of Section 099000.

B. Samples: For each exposed product. Show profiles, with finishes on half of each product and unfinished on other half to show material substrates. Step layers of finishes that involve multiple coats.

C. Manufacturer's Instructions: Include installation instructions, rough-in dimensions, special procedures, and conditions requiring special attention.

D. Certification: Indicate conformance to regulatory requirements for Class 1 Fire Rated panel products.

1.2 QUALITY ASSURANCE

A. Fabricator/Installer Qualifications: Minimum 5 years documented experience in production of and installing finish carpentry in commercial projects.

PART 2 - PRODUCTS

2.1 REGULATORY REQUIREMENTS

A. Flame Spread and Smoke Developed for Composite Wood/Engineered Wood Panels: As tested to ASTM E84 for interior panels including medium density fiberboard (MDF) and medium density fiberboard core plywood:
   1. Class A: Flamespread 0-25; smoke developed 0-450.

B. Wood Materials and Fasteners: Conform to building code indicated.
   1. Softwood Lumber Grading Rules: Conform to standards establishing sizes and quality in conformance to DOC PS 20.
   2. Wood Structural Panels: Conform to DOC PS 1 or DOC PS 2 as applicable.

2.2 WOOD MATERIALS

A. Lumber Grading Rules: WWPA or WCLIB based on DOC PS 20.
   1. Interior Use: Kiln dried or air dried to 5 percent. 10 percent maximum when delivered to site.

B. Finish Lumber for Interior Transparent Finish: Douglas fir, vertical grain, free of heart center.

C. Finish Lumber for Interior Painted Finishes:
   1. Douglas Fir or Hem-Fir, WWPA 10.52 Prime Grade MG or WWPA 10.12 C Select MG.
   2. Idaho White Pine, WWPA 10.12 Choice MG.
   3. Yellow Poplar. WWPA 10.12 C Select MG. For interior use only.

D. Hardwood Lumber for Interior Transparent Finish: Select white maple, Plain sawn or Red oak, rift sawn.

2.3 FINISH CARPENTRY ITEMS

A. Wood Trim:
   1. Provide, for paint finish specified in Section 099000.

B. Wood Stairs and Railings:
   1. Interior: Provide wood stairs and wood railing with shop-applied transparent finish.

C. Closet and Utility Shelving:
   1. Shelving and Cleats: 3/4-inch finish boards.

2. Ligature-Resistant Safety Closet Rod: Cape Cod Systems Safety Closet Rod, CCS-C500 https://www.capecodsystemscompany.com/store/ccs-c500,product.asp, or Architect-accepted substitution.
3. Shelf Brackets with Rod Support: BHMA A156.16, B04051; prime-painted formed steel.

D. Pull-Down Attic Ladder:
1. Products: Provide, or Architect-accepted substitution complying with Section 012500:
   a. Louisville Ladder: AA2210 Elite Aluminum Attic Ladder
2. Material: Aluminum.
3. Color: Natural Wood.
4. Item Weight: 49 Pounds.
5. Load Capacity: 375 Pounds.
6. Rough Opening: 22-1/2 inches by 54-inches.
7. Ceiling Height: Fits 7-foot 8-inches to 10-foot 3-inches ceilings.
8. Step Depth: 3.25 inches.
9. Rail Size: 3.125 inches.
10. Reinforced, grooved steps for traction. Heavy-duty hinges for smooth unfolding and stability.
11. Adjustable spring tension.

2.4 ACCESSORIES AND HARDWARE

A. Glue for Woodwork: Water resistant, AWS Type I or Type II, designed for intended use.

B. Fasteners for Finish Carpentry: Provide necessary nails, spikes, screws, and bolts.

C. Hot-dipped galvanize rough hardware subject to moisture and as specified in Section 061000.

D. Use recessed screws, finish, or casing nails and screws for exposed work, except as otherwise indicated.

2.5 FABRICATION

A. Mill, grade, and fabricate to meet or exceed specified requirements.

B. Finish exposed surfaces to be smooth, free from tool and machine marks.

C. Use concealed fastenings wherever possible.

D. Kerf backs of wood members more than 5 inch wide, or more than 3/4 inch thick.

E. Joints: Make tight and form to conceal or reduce exposed shrinkage.

F. Wood Hand Railings: Hardwood lumber specified this Section in profiles indicated.

2.6 FINISHES

A. Back Priming: Prior to installation, back prime concealed faces of panels, moldings, and other thin wood, plywood, and panel material subject to warping and bowing. Apply 2 coats of sealer, primer, or suitable finish system to balance finish on exposed face. Refer to Section 099000.

B. Preparation: Sand, seal, and prepare surfaces to receive uniform coatings free of blotches, inconsistent absorption, irregular sheen, and color variations.

C. Field Finished Wood Trim and Field Fabricated Finished Carpentry: Provide painted and transparent finish systems under work of Section 099000.

D. Wood Putty Filler: Match color of finished wood.

2.7 SOURCE QUALITY CONTROL

A. Field Measurements: Verify field dimensions with shop drawings before beginning fabrications.

PART 3 - EXECUTION

3.1 INSTALLATION OF FINISH CARPENTRY

A. Conform to AWI Architectural Woodwork Quality Standards and manufacturer's instructions.

B. Use blind fastening where indicated or practical. At face of finished work, use finish nails or finish head screws at face of finished installations.

C. Use screws designed for each installation. Use blind fastening where indicated or practical.
   1. Set and countersink nails and screws.
   2. Fill recessed heads with wood putty.

D. Space screws and nails at equal intervals at spacing to fasten permanently and securely in place, except not less than one fastener at each end and at center of each item.

E. Install to detail with tight joints.

F. Miter casings and moldings except as otherwise indicated.

G. Cut butt splices at 30 degree angles.

H. Make members and lines level, plumb, and square to line with adjacent construction.

I. Select and cut material to exclude damaged, marked, or defective areas.

J. Eased Edges: Ease exposed edges of finish work 1/16 inch minimum radius whether indicated or not.

K. Close exposed joints, spaces, and openings against adjacent construction with scribes, fillers, and trim pieces of same material and finish as finish carpentry item.

3.2 INSTALLATION OF WORK FROM OTHER SECTIONS

A. Install finished installations and items provided in other Sections but not normally installed under those Sections. Conform to manufacturer's templates and instructions and provisions of Contract Documents.

END OF SECTION

THIS PAGE INTENTIONALLY LEFT BLANK

SECTION 064023 - INTERIOR ARCHITECTURAL WOODWORK

PART 1 - GENERAL

1.1 SUBMITTALS

A. Shop Drawings:
1. Woodwork locations on large scale plans and elevations.
2. Cross sections, joint details, dimensions, tolerances, and clearances.
3. Fastening methods.
4. Hardware locations.
5. Blocking requirements for anchor placement, and utility/service requirements and locations.
6. Show each type of finish.

B. Product Data: Published brochures are acceptable in lieu of Shop Drawings where specifically applicable to provisions of Contract Documents.

C. Samples:
1. Cabinets: Small sample cabinet with construction and hardware complying with Contract Documents.
2. Plastic laminate showing specified finishes and colors.
3. Hardwood finish showing hardwood veneer and lumber with specified transparent finish.
4. Plastic edge banding Samples of each type and color.
5. Quartz colors and edge treatments.
6. Hardware pulls and latches with specified finish.
7. Shelf Supports: Samples of shelf clips for adjustable shelving within casework.
8. Grommets Samples of each type and color.

1.2 INFORMATIONAL SUBMITTALS

A. Certificates: Indicating compliance with specified requirements.

B. Formaldehyde Content: Certify that formaldehyde emissions for manufactured wood products, including glues and binders, are no greater than that occurring naturally in wood, ambient air environments, and in no case exceeding 0.03 parts per million.

1.3 QUALITY ASSURANCE

A. Fabricator/Installer Qualifications:
1. Minimum 10 years documented experience fabricating and installing architectural wood casework for successful projects of similar scope, type, and complexity, with capacity to provide required woodwork without causing delay in work.
2. Single Source Responsibility: Furnish and install work of this Section by or under direction of woodwork manufacturer/fabricator.

B. Mockups: Install in accordance with Division 01 requirements for mockups, and the following:
1. Full size mockup of each type of construction and finish. Include base cabinet and upper cabinet complete with drawers, doors, adjustable shelves, and countertops.
2. Locate where directed by Architect or Owner.
3. Verify mockup complying with manufacturer's instructions and Contract Documents. Make adjustments where not in conformance.
4. Protect and maintain accepted mockup as standard of quality for work of this Section.
5. Incorporate accepted mockup into work of this Section.

C. Field Measurements: Verify field dimensions prior to beginning shop drawings and other work of this Section.

1.4 FIELD CONDITIONS

A. Store materials in ventilated, interior or sheltered locations, with spacers to allow air circulation. Protect from excessive humidity. Maintain relative humidity of 25 percent to 55 percent before, during, and after installation.

B. Allow materials to acclimate to temperature and humidity conditions as recommended by specified woodwork quality standard for minimum of 48 hours prior to installation. Maintain same conditions during and after installation.

PART 2 - PRODUCTS

2.1 MANUFACTURERS, GENERAL

A. Where Manufacturers/Products are Specified: Provide specified manufacturers/products, or Architect-approved substitution.

B. Approved Substitutions: Architect-approved equal products submitted as specified for substitutions.

2.2 INTERIOR ARCHITECTURAL WOODWORK, GENERAL

A. Quality Standard: Unless otherwise indicated, comply with AWI Standards for grades of interior architectural woodwork, fabrication, installation, finishes and other requirements. Provide Custom Grade work.

2.3 REGULATORY REQUIREMENTS

A. Seismic Bracing: Design and install casework using seismic braces, anchors, and stiffeners to restrain overturning of casework, suitable for Seismic Design Seismic Category indicated on Structural Drawings.

B. Accessibility: Comply with ADA, ANSI 117.1, and requirements of authorities having jurisdiction.

2.4 PERFORMANCE / DESIGN CRITERIA

A. Meet or exceed AWI Standards for woodwork, including appendices, and provisions of Contract Documents.

B. Single Source Responsibility: Fabricate and install woodwork under responsibility of single woodwork manufacturer/fabricator/installer.

C. Urea Formaldehyde Content in Manufactured Cellulous Based Products: No added urea formaldehyde (NAUF) is permitted within glues, adhesives, binders, and other additives. Do not exceed urea formaldehyde emissions greater than that occurring naturally in wood.

2.5 WOOD MATERIALS

A. Wood, General: comply with AWI Standards.

B. Moisture Content:
   1. Kiln dried or air dried to 5 percent. 10 percent maximum when delivered to site.

C. Plywood: Moisture-resistant and marine grade.

D. Hardwood Veneer Plywood Panels: Woodworker’s option of one of, solid, predominantly-white hue wood; such as Maple, White Oak, Beech, or White Birch species.
   1. Cabinet Panels and Shelving: Slip and balanced matched veneer with 1/8” matching solid wood edging.
   2. Trim and Base: Solid stock in profiles and sizes as shown in drawings.
   3. Finish: Shop-finished, transparent finish in a System-12 transparent water-based Polyurethane system. Other scheduled stain colors shall use the same finish system.
      a. Match Architect's sample.

E. Hardwood Lumber for Transparent Finish:
   1. Exposed Surfaces: Select White Birch, Plain Sliced.
   2. Matching for Exposed Surfaces: Book and Running Matched.
   3. Semi-Exposed Surfaces: Select White Birch, Plain Sliced.
   4. Concealed Surfaces Mill Option.

F. Hardwood Edge Trim: Splined solid hardwood lumber, matching face veneer, flush with adjacent surfaces, edges eased.

2.6 MEDIUM DENSITY FIBERBOARD (MDF) PANELS

A. Use only at plastic laminate finished woodwork.

B. Particleboard not acceptable.

C. Comply with AWI, ANSI A208.2 Product Class MD, Industrial Grade, 40 to 50 pound density.
   1. Formaldehyde Content: No added urea formaldehyde (NAUF).

D. Panels: Medite, Medite II, or Arreis. No added urea formaldehyde (NAUF).

E. Fire Rated Panels: Medite FR, UL 723, Class I Fire Rated. No added urea formaldehyde. Provide at fire-resistive rated assemblies.

F. Moisture Resistant (MR) Panels: Medite, Medex, No added urea formaldehyde (NAUF). Use as core for countertops subject to moisture conditions, such as those with sink cutouts, and those at windowsills.

2.7 PLASTIC LAMINATE MATERIALS

A. Products: Provide products from one of the following, or Architect-accepted substitution complying with Section 012500.
   1. Formica Corp. a Broadview Holding company
   2. Wilsonart LLC

B. High Pressure Decorative Laminate (HPDL): Meet or exceed NEMA LD3 standards for High Pressure Plastic Laminate with low glare, fine textured finish. Manufacturer's product and colors as selected by Architect.
   1. Horizontal Grade NEMA HGS, 0.048 inch thick.
   2. Vertical Grade NEMA VGP, 0.028 inch thick.

C. Post-Forming Grades Plastic Laminate: Provide in lieu of Horizontal and Vertical Grades where post forming is indicated.
   1. Horizontal NEMA HGP, 0.039 inch thick.
   2. Vertical NEMA VPG, 0.028 inch thick.

D. Cabinet Liner: NEMA CLS, 0.020 inch thick, melamine laminate.

E. Cabinet Backer: NEMA BKL, 0.020 inch thick.

2.8 PLASTIC EDGE BANDING

A. Material: ABS or polypropylene.

B. Typical Plastic Edge Banding: Provide at plastic laminated faced casework edges.
   1. Exposed Edges 3 mm (1/8 inch) thick.
   2. Semi-Exposed Edges: 0.02 inch thick.
   3. Concealed Edges No banding.:
   4. Trim edges and corners and buff smooth, same thickness as edge.

C. Upturned Plastic Edge Banding: 3mm by 1-3/16 inch. Provide at open shelves.

D. Adhere with hot melt waterproof adhesive under heat and pressure.

2.9 PLASTIC LAMINATE COUNTERTOPS

A. Meet or exceed NEMA LD3 standards for High Pressure Plastic Laminate with low glare, fine textured finish.

B. High Pressure Decorative Laminate (HPDL) Countertops: Horizontal Grade, NEMA HGS, 0.048 inch thick.

C. Cabinet Liner: NEMA CLS, 0.020 inch thick, melamine laminate.

2.10 QUARTZ AGGLOMERATE

A. Products: Provide products from one of the following, or Architect-approved substitution.
   1. Caesarstone U.S.A., Inc; Caesarstone Quartz Surfacing

2. Cambria USA
3. Cosentino; Silestone
4. DuPont; Corian Quartz (formerly Zodiaq)

B. Composition: Up to 93 percent crushed quartz aggregate combined with polymer resins and pigments, and fabricated into slabs using a vacuum vibro-compaction process.

C. Thickness: 3/4 inch (2 cm).

D. Flame spread and smoke developed complying with UL Class A.

E. Finish: As indicated.

F. Color and Pattern: As selected by Architect from manufacturer's full range.

2.11 HARDWARE

A. Manufacturers: Except where otherwise indicated, provide products from one of the following, or Architect-approved substitution.
1. Accuride
2. Häfele America Co.
3. Knape & Vogt
4. Olympus Lock, Inc.

B. Five Knuckle Hinges: Institutional grade, 2-3/4 inch overlay type with hospital tip (fixed pin), 180-degree swing if adjacent to a partition, 270-degree swing for all others, 0.095 inches thick, ANSI-BHMA standard A156.9, Grade 1, 4-ball bearing. Provide 3 hinges per door for doors 48 inches and over in height.
1. Products: Provide one of the following, or Architect-approved substitution.
a. Rockford Process Control #374.
b. Stanley (dormakaba) HT1592.

C. Pivot Hinges:
1. Products: Provide the following, or Architect-approved substitution.
a. Häfele, Aximat 300 Series Single Pivot Hinge 343.05.738, 270-degree opening angle, 3 dimensional adjustment, integrated latch, 3/4 inch (19 mm) door thickness, dowel mounted. Include screws matching finish of hinge. Magnetic catches not required.
2. Color/Finish: Matte nickel.
3. ANSI / BHMA A-156.9 Grade 1.
a. BPT-1 - Hinge Performance Test.
b. BPT-2 - Hinge Operating Life Test.

D. ADA-compliant Door and Drawer Oval Wire Pulls:
1. Products: Provide the following, or Architect-approved substitution.
a. Olympus Lock 102-015-4SC (US26D)
1) Width: 4 inch center to center.
2) Handle: Oval diameter.
3) Projection: 7/8 inch.
b. Häfele America Co., Catalog 116.11.635
1) Width: 3-13/16 inch center to center.
2) Handle: Oval, diameter 3/16 inch by 3/8 inch.
3) Projection: 1-3/16 inch.

E. Locks:
1. Door Locks: BHMA A156.11, E07121.
2. Drawer Locks: BHMA A156.11, E07041.
3. Keying: Key to room door with locks master keyed alike, conforming to Owner's keying system.
4. Single Doors: Keyed locks at each cabinet door and drawer.
5. Double Doors: One keyed lock at right-handed door and one No. 2LPD strike and keeper at interior side of left-handed door to hold door closed using single keyed lock.

6. Trim Spacer: Through-bolt using machine screws. Do not mount with wood screws.
    a. Products: Provide the following, or Architect-approved substitution.
        1) Olympus Trim Spacer ETS1 reinforcing trim spacer, and through-bolt mount.
7. Magnetic Catches (not required at Häfele Series 300 Aximat hinges): 7 pound, matching color of edge banding. Use star washers under screw heads to hold latch tight without distorting the plastic. Not required for hinges with integrated latches.
    a. Products: Provide the following, or Architect-approved substitution.
        1) Heavy Duty: EPCO Architectural Hardware (USA) 592

F. Drawer Slides: Steel ball bearing movement, electro-plate zinc with clear lacquer coating. Provide the following products as applicable to each type and condition, or Architect-approved substitutions:
1. Medium Duty Standard Drawers:
    a. Up to 16 Inch Drawer Width: 100 pound load rating, 1 inch over travel extension slides. Lever disconnect side mounting.
        1) Accuride 3832 or 3834 Series, or Knape & Vogt No. 8400
    b. Up to 24 Inch Drawer Width: 100 pound load rating, 1 inch over travel extension slides. Rail or lever disconnect side mounting.
        1) Accuride 7434 Series, or Knape & Vogt No. 8400
2. Heavy Duty Lateral Drawers and File Drawers:
    a. Up to 24 inch Drawer Width:150 pound load rating, 1-1/2 inch over-travel extension slides. Rail disconnect side mounting.
        1) Accuride 4032 or 4034 Series, or Knape & Vogt No. 8500
    b. Up to 42 Inch Drawer Width: 200 pound load rating, 1-1/2 inch over-travel extension slides. Rail disconnect side mounting.
        1) Accuride 3640, or Knape & Vogt No. 8805

G. Shelf Clips:
1. Hafele Item no. 282.24.720 Shelf Support, with Shelf Fixing Plug 137lb cap, or Architect-accepted substitution.
    a. Finish: Nickel-plated.
2. Hafele Item no. 282.26.701 Shelf Support, Threaded Pin, 125 kg cap, 12 mm bolt distance, or Architect-accepted substitution

H. Wire Access Grommets:
1. Manufacturers: Provide products from the following, or Architect-approved substitution.
    a. Mockett
2. Plastic grommet with slotted cap, 2-3/8 inch diameter.
3. Design to accommodate plugs up to 2-1/4 inches such as computer peripheral and business machine plugs.
4. Colors: As selected by Architect from manufacturer's available colors.

I. Counter Support Bracket: Manufacturer's standard shelf angle, welded construction, minimum 15 gauge by 1-1/2 inch tube steel or 1/4 inch flat bar. Support counters exceeding 36-inch span.
1. Horizontal Leg: Less 3-inch width of counter.
2. Vertical Leg: Minimum 18 inch deep.
3. Leg Brace: 1/4 inch thick by 1-1/2 inch flat bar gusset plate at 45 degree angle, 6 inch out.
4. Continuous blocking at back of support bracket.

J. Casework Adjustable Standards and Adjustable Shelf Clips: Continuous recessed standards with removable and adjustable support clips.
1. Pilaster Standards: Knape & Vogt, No. 255 ZC, 19 gauge steel by 5/8 inch wide, zinc plated.
2. Support Clips: Knape & Vogt, No. 256 ZC, zinc plated.

K. Casework Adjustable Shelving at Upper Cabinets: Provide except above refrigerators.

L. Wall Mounted Adjustable Shelf Standards and Brackets: Electro-plated finish. Provide the following products as applicable to each type and condition, or Architect-approved substitutions:

1. Medium Duty at Display Casework: 16 gauge, 1 inch adjustment, 3/4 inch x 1/2 inch high. Capacity 405 pounds at 12 inch shelf depth with brackets at 16 inch on center.
   a. Standards: Reeve Store Equipment Co. 40 and K&V 83 ANO
   b. Brackets: K&V 183 ANO
2. Heavy Duty at Storage Shelves: 12 gauge steel, 2 inch adjustment brackets. Capacity 1060 pounds at 12 inch shelf depth, with brackets at 16 inch on center.
   a. Standards: Reeve Store Equipment Co. 40 and K&V 87 ANO
   b. Brackets: Reeve Store Equipment Co. 81 and K&V 187 ANO with 210 shelf rest
3. Screws: Suitable for purpose, flat heads set flush into standards so as not to interfere with mounting of brackets. Screw head finish to visually match standards.

M. Wall Mounted Fixed Shelf Bracket: Welded construction, finished with powder coat or enamel coating matching color of edge banding.
   1. Minimum 1-1/2 inch wide by 1/4-inch thick cold rolled steel flatbar with minimum 10 inch horizontal and vertical legs, braced with 1/4 inch diameter steel rod or flat bar welded at junctures. Cold rolled steel flatbar 0.20 inch by 1-3/16 inch with 11-1/2 inch horizontal and vertical legs, braced with 0.20 inch thick flat bar welded at junctures, 1,000 pound load capacity at 16 inch centers per pair, tested ANSI A156.9.
   2. Products: Provide the following, or Architect-approved substitution.
      a. Knape & Vogt 208 L-Bracket

2.12 CABINET FABRICATION, GENERAL

A. Construction: Style 1 (Overlay): Type A (frameless), Flush Overlay interface with integral finished ends and scribes at wall-to-wall installations not exceeding 1-1/2 inch.

B. Casework Construction Joints:
   1. Doweled 6 minimum 10mm diameter hardwood, fluted dowels. Glued and clamped.
   2. Lock Shoulder Joint: Glued and stapled or screwed.
   3. Rabbeted Construction Joints: Glued and stapled or screwed.
   4. Spline or Biscuit Joints 3 per foot, glued under pressure.
   5. Flush Butt Panel Joints: Accepted only at concealed backs. Glued and screwed. Not accepted at drawer bottoms.

C. Wall and Base Cabinets:
   1. Panel Core: 3/4 inch thick plywood.
   2. Semi-Exposed Surface Finish: Plastic laminate.
   3. Concealed Surface Finish: Liner-grade balancing sheet, including at concealed tops, bottoms, sides, and backs of casework.

D. Base Cabinet Subtops: Solid, except 4 inch wide front to back rails at each side of sink openings.

E. Toe Kicks: 4 inch high by 3/4-inch thick moisture-resistant MDF set into 3-inch deep toe kick at front and open ends of base cabinets.
   1. Base Cabinets Set on Continuous Bases: Build in place, level, and shim. Align with adjoining casework
   2. Base Cabinets Set Directly On Floor: Extend end and back panels to floor. Make level and aligned with adjoining cabinets.

F. Cabinet Backs:
   1. Concealed Backs Installed Against Walls:
      a. 1/2 inch thick hardwood veneer plywood.
      b. Seal concealed panel face to prevent moisture intrusion.

G. Hardware:
   1. Pulls: One vertically mounted pull for each door and horizontally mounted for each drawer, except 2 pulls on drawers exceeding 30 inch width.
   2. Keyed Locks: One lock for each door or double door opening.
   3. Hinges and Magnetic Catches: Two hinges and one catch per door, except three hinges and two magnetic catches on doors 48 inch high and over.

2.13 CABINET FABRICATION, PLASTIC LAMINATE

A. Wall and Base Cabinets: Vertical Grade HDPL. Include areas that will be exposed when movable appliances are removed.

B. Edges: Specified plastic edge banding at horizontal and vertical edges.

C. Exposed Cabinet Backs: Vertical Grade HDPL face over 3/4 inch thick MDF panel.

2.14 CABINET FABRICATION, WOOD VENEERED

A. Wall and Base Cabinets: 3/4 inch thick plywood, veneered.

B. Hardwood Veneer Plywood Panels:
   1. Faces Hardwood veneers both sides.
   2. Edges Exposed plywood edge laminations. No edge banding. Finish exposed edges smooth and free of voids and other visual imperfections.
   3. Fasteners: Concealed at locations exposed to view.

C. Edges: 3/4-inch solid stock wood edging to mace face veneer species.

D. Faces: Hardwood veneer at both door faces.

E. Exposed Cabinet Backs at Freestanding Casework: 3/4 inch thick hardwood veneer plywood panel, matching exposed cabinet finish.

2.15 CABINET DOOR AND DRAWER FABRICATION

A. Cabinet Doors:
   1. Hardwood Veneer Faced Casework: 1/2 inch thick solid wood panels matching cabinets.
   2. Plastic Laminate Casework:
      a. Core: 3/4 inch thick MDF panels.
      b. Faces Vertical Grade HDPL at outside door face and melamine laminate at inside door face.
      c. Edges: Plastic edge banding.
   3. Hardware:
      a. Pulls: One vertically mounted pull per door.
      b. Keyed Locks:
         1) Right Hand Door: One keyed lock.
         2) Left Hand Door: One catch at interior side of door to hold door closed using single keyed lock and flush bolt, at top and bottom of 1-3/4 inch doors.
      c. Hinges: Two hinges per door, except three hinges on doors 36 inch high and over.
      d. Magnetic Catches: One magnetic catch per door, two magnetic catches on doors 48 inch high and over.

B. Cabinet Drawers:
   1. Hardwood Veneer Faced Casework:
      a. Front: Hardwood veneer face and back.
      b. Edges: Hardwood edge trim matching face veneer.
      c. Edges of Drawer Box: Hardwood edge trim matching face veneer.
   2. Plastic Laminate Faced Casework
      a. Front: 3/4 inch MDF core.
      b. Face vertical grade HDPL. Back with melamine laminate.
      c. Edges: Plastic edge banding.
      d. Edges of Drawer Box: Plastic edge banding.
   3. Subfronts and Backs: 11/16 to 3/4 inch MDF, faced with melamine laminate.
   4. Sides: 1/2 inch MDF faced with melamine laminate.
   5. Bottoms: 1/2 inch thick MDF faced with melamine laminate.
      a. House into sides, front, and back with continuous dado or lock shouldered construction.
      b. Completely glued around perimeter with hot-melt or PVA adhesive.

6. Drawers: Over 30 Inch Wide MDF stiffeners or metal reinforcing.
7. Drawer Joints: Assemble true and square with doweled, lock-shoulder, or rabbeted joints.
8. Hardware:
    a. Drawer Slides: Mount with positive in and out stops for permanent alignment and quiet operation.
    b. Pull: One horizontally mounted pull for each drawer.
    c. Keyed Locks: One lock for each drawer.

2.16 SHELVING FABRICATION

A. Fixed and Adjustable Casework Shelves:
1. Shelf Span:
    a. Minimum 3/4 inch thick MDF under 30 inch span.
    b. 1 inch thick MDF over 30 inch and under 42 inch span.
    c. 1-1/8 inch thick veneer core plywood over 42 inch span.
2. Faces Melamine cabinet liner both sides.
3. Plastic Laminate Shelving Edges: Plastic edge band at exposed face of fixed shelves and all four edges of adjustable shelves.
    a. Provide upturned lip at edges of open shelves.
4. Hardwood Veneer Faced Shelving:
    a. Faces: Hardwood veneer both sides.
    b. Edges: 3/4-inch solid stock wood edging to mace face species.

2.17 GLASS DOORS AND SHELVES

A. Laminated Safety Glass: 1/4 inch thick glass and 1/8 inch thick glass with 0.030 polyvinyl inner layer for 3/8 inch total thickness, complying with Section 088000. Exposed edges ground and polished.

2.18 COUNTERTOP AND BACKSPLASH FABRICATION

A. Plastic Laminate Countertop and Backsplash:
1. Core: 3/4 inch thick MDF with 1/2-inch thick buildup at edges and spans exceeding 36 inch.
    a. Moisture resistant core at sink countertops and where subject to moisture.
2. Fire-resistant core at counters extending through fire-resistive rated wall construction.
3. Plastic Laminate Face Sheet Horizontal Grade HPDL.
4. Backing Sheet: Liner Grade at countertops and backsplashes.
5. Plastic Edge Banding: 1-1/4 inch face exposure at countertop edge. Scribe to wall at top edge of back splash.

B. Quartz Agglomerate Countertop Fabrication:
1. Exposed Edges and Corners:
    a. Countertops:
        1) Edges: Beveled profile, single layer thick.
        2) Outside Corners: 3/4 inch (20 mm) radius.
    b. Backsplash:
        1) Edges: Square.
        2) Outside Corners: Square butt joints.

C. Backsplash: 4 inch high by 1 deep, field installed. Integral countertop and backsplash not acceptable.

2.19 ACCESSORIES

A. Woodwork Adhesive: Water-resistant, AWI Quality Standards Type I or Type II, applicable for intended use.

B. Plastic Laminate Adhesives: EPA VOC compliant, as instructed by manufacturer.

C. Exposed Fasteners and Washers:
1. Stainless steel screw and matching finish washer
2. Type W threads for screws penetrating wood and Type S for screws penetrating steel.

3. Phillips, square drive, or spanner head drive.
4. Minimum 1-1/4 inch penetration into wood framing and backing and minimum 3/8 inch penetration into metal stud framing and backing.

2.20 FINISHES

A. Wood Products:
1. Grade: Match grade of item to be finished.
2. Shop Finishing Systems: According to AWI finish system standards. Submit documentation confirming performance characteristics meeting or exceeding specified finish system.
a. Conversion Varnish.
3. Sheen: Satin.
4. Color: Natural.

B. Plastic Laminate Finishes: As selected by Architect from manufacturer's available colors and patterns.

C. Melamine Liner Color: Gray.

D. Plastic Edge Banding Color:
1. Match color of adjacent plastic laminate from full selection of manufacturer's color selection, as accepted by Architect.
2. Match melamine where not adjacent to plastic laminate.

E. Quartz Agglomerate Finishes: As selected by Architect from manufacturer's available colors, patterns, and finishes.

F. Hardware Finish: US 26 D (626) US Satin Chrome or 32D (630) Satin Stainless Steel unless otherwise indicated.

G. Shelf Clip Color: Clear.

H. Grommet Color: Closest color match to countertop, confirmed by Architect's selection from manufacturer's standard colors.

I. Fasteners: Match finish of hardware item being fastened.

PART 3 - EXECUTION

3.1 INSTALLATION

A. Grade: Match grade of item to be installed.

B. Comply with manufacturer's instructions and Contract Documents.

C. Position and secure in true alignment, level and plumb.

D. Fasten woodwork backs into solid wall backing or framing using exposed screws and washers matching finish of screws.

E. Install wall-hung cabinets with sufficient fasteners and devices as needed to support weight of loaded cabinets.

F. Fasten adjoining cabinet with sufficient fasteners to meet tightly at top, middle, and bottom side panels. Place fasteners inconspicuously inside cabinets.

G. Close exposed joints, spaces, and openings to make tight hairline joints against adjacent construction to prevent papers and other materials from falling behind cabinets.
1. Install scribes and fillers of same material and finish as woodwork.
2. Secure with concealed screws.

H. Provide minimum 3 inch deep by 4 inch high toe space at floor mounted casework.

I. Door and Drawer Hardware:

1. Mount hardware using manufacturer's templates, aligned, plumb, and true between adjacent doors and drawers.
2. Mount with adjacent door and drawer reveals equally spaced, plumb, and square.
3. Install operating hardware to act smoothly without hanging up or binding.
4. Lubricate hardware in accordance to manufacturer's instructions.

J. Wall Shelves: Support shelves on standards and brackets at 36 inch maximum spacing.

K. Countertops:
1. Install intermediate joints between corners in longest possible length for each top.
2. Maintain joint distance of minimum 24 inch clearance from sink cutout.
3. Where joints cannot be avoided at knee spaces, install additional reinforcing without reducing knee-space clearance.
4. Apply acrylic latex adhesive at each field joint, and tighten together with 1/4 inch drawbolts set into routed bottom face as needed to make flush and hairline.
5. Cut smooth, crack free holes and cutouts with minimum 1/4 inch diameter radiused inside corners.
6. Seal exposed edges with waterproof sealant.
7. Install wall ledgers and counter support angles, secured to wall for support of counters spanning over 36 inch and as needed to eliminate deflection at knee-space.
8. Field Installed Backsplash: Fasten with concealed screws at 12 inch center into bed of acrylic resin along entire back edge of countertops.

L. Make cutouts using templates supplied by work of other trades for plumbing, mechanical, electrical, and communications fixtures and equipment installations into casework. Provide backing as required for secure attachment of fixtures and equipment.

END OF SECTION

SECTION 072113.13 - FOAM BOARD INSULATION

PART 1 - GENERAL

1.1 SUBMITTALS

A. Product Data: Indicate product characteristics, performance criteria, and limitations. Include thermal resistance information. Show conformance to specified requirements.

1.2 WARRANTY

A. Extruded Polystyrene (XPS) Insulation: Manufacturer standard 15 year Warranty that thermal resistance value (R-Value) of installed insulation will not vary more than 10 percent from published R-Value.

PART 2 - PRODUCTS

2.1 REGULATORY REQUIREMENTS

A. Provide thickness and R-Values shown on Drawings.

2.2 EXTRUDED POLYSTYRENE (XPS) RIGID FOAM INSULATION BOARD

A. Products: Provide one of the following, or approved substitution.
   1. DuPont: Styrofoam Square Edge
   2. Owens Corning: Foamular.

B. Vertical Applications: ASTM C578 Type IV (25 psi).

2.3 INSULATION FURRING STRIPS

A. Insulation Furring Strips: Roll formed 25 gauge, 1-5/8 inch wide galvanized steel furring strip with 1/8 inch ribs and pre-punched holes at 10 inch on center.

B. Pneumatic Mechanical Fasteners: As instructed by manufacturer.
   1. Concrete: 0.190 inch by 2-2/4 inch for 3/4 inch penetration.
   2. Masonry: 0.144 inch by 3 inch for 1 inch penetration.

2.4 ACCESSORIES

A. Provide miscellaneous and accessory materials, fasteners, adhesives, tools, and equipment as needed for completion of insulation work.

B. Construction Tape: Manufacturer's recommended waterproof, pressure sensitive, UV resistant sealing tape.

PART 3 - EXECUTION

3.1 INSTALLATION

A. Install in accordance manufacturer's instructions and provisions of Contract Documents.

B. Cut and fit rigid insulation snug to penetrations, projections, conduit, framing, and other construction.
   1. Trim boards to minimize gaps. Where insulation is more than one layer, leave between 1/16 inch to 1/8 inch wide gap at adjacent board or adjacent construction.
   2. Fill gaps larger than 1/4 inch with rigid insulation cut to fit.

3.2 RIGID FOAM BOARD INSULATION AT EXTERIOR SIDE OF FOUNDATION WALLS BELOW GRADE

A. Material: Extruded Polystyrene (XPS) insulation.

B. Install over prepared exterior face of below grade footings and foundation walls, to a minimum of 36 inches below grade unless a different depth is indicated.

END OF SECTION

THIS PAGE INTENTIONALLY LEFT BLANK

SECTION 072116 - BATT AND BLANKET INSULATION

PART 1 - GENERAL

1.1 SUBMITTALS

A. Product Data:
   1. Published R-Value for thickness of batt insulation, product characteristics, performance criteria, and limitations.
   2. Accessories including insulation hangers and other specified items.
   3. Sound Absorptive Coefficient for fiberglass sound blanket.

B. Manufacturer's Instructions: Indicate installation requirements, special procedures, and conditions requiring special attention.

1.2 QUALITY ASSURANCE

A. Fiberglass Insulation Binders: Formaldehyde free binders.

B. Installer Qualifications: Company specializing in work of this Section with minimum 3 years documented experience.

PART 2 - PRODUCTS

2.1 SYSTEMS

A. Thermal Insulation: Thermal fiberglass batt and blanket insulation and vapor retarder at exterior walls, floor/ceiling, and roof/ceiling assemblies.

B. Acoustical Insulation: Thermal fiberglass batt and blanket insulation used at acoustical interior partition walls and floor/ceiling assemblies.

2.2 INSULATION MANUFACTURERS

A. Manufacturers: Provide products from one of the following, or approved substitution.
   1. CertainTeed Saint-Gobain
   2. Johns Manville, a Berkshire Hathaway Company
   3. Knauf Insulation
   4. Owens Corning

B. Approved Substitutions: Architect-approved equal products submitted as specified for substitutions.

2.3 PERFORMANCE REQUIREMENTS

A. Provide thickness and R-Values shown on Drawings.

B. Thermal Performance for Batt and Blanket Insulation: As documented by approved product data.

C. Comply with acoustical performance shown on Drawings.

2.4 BATT AND BLANKET THERMAL INSULATION

A. Thermal Resistance Values: Conform to ASTM C518.
   1. Provide High Density fiberglass batt and blanket insulations, except Normal Density insulation is accepted in thickness as required to meet Thermal Resistance Values shown on Drawings.

B. Dimensional Stability: Linear shrinkage less than 0.1 percent.

C. Unfaced Fiberglass Insulation: ASTM C665, Type I, Class A.
   1. Surface Burning Characteristics: ASTM E84.
      a. Flame Spread: Maximum 25.

b. Smoke Developed: Maximum 50.
2. Combustion Characteristics: Passes ASTM E136, non-combustible.

2.5 BATT AND BLANKET ACOUSTICAL INSULATION

A. Unfaced, friction fit thermal glass fiber batt insulation is accepted for sound insulation with tested NRC coefficients. Provide in thickness to fill full width of studs at interior partitions, except where otherwise indicated by Wall Type Schedule.

2.6 FASTENERS AND ADHESIVES

A. Nails, and Staples: Electroplated steel wire of type and size to suit installation

B. Screws: Electroplated Type W for wood and Type S for metal, self-drilling or self-tapping and as suitable for purpose. Provide neoprene or EPDM washers where indicated.

C. Sealing tape: Ideal, No 375, or as accepted by Architect.

D. Insulation Supports: Galvanized 14 gauge wire, 15-1/2 inch and 23-1/2 inch lengths.
1. Simpson Strong-Tie Model, IS16 and IS24.

2.7 ACCESSORIES

A. Insulation Holder Assembly: T-Foil, UL tested FS 25, Class I, polypropylene/scrim/kraft facing on exposed face. Provide as complete assembly as required to obtain fire-resistive rated system in accordance with manufacturer's instructions.

B. Impaling pins:
1. Impaling Spindle: Mild steel length to suit insulation thickness with corrosion resistant coating.
2. Base Plate: Minimum 2 inch square, perforated galvanized steel.
3. Self-Locking Washers: Galvanized steel. Size and type capable of securely and rigidly fastening insulation in place and supporting insulation weight. Assume 3 pounds maximum weight per hanger assembly.

C. Impaling Pin Adhesive:
1. Mon-Eco Industries, Inc., MEI Eco-Hanger Grip Adhesive.
2. AGM Industries, TACTOO, Adhesive GPA-72.

D. Firestopping: Specified Section 078400.

E. Miscellaneous: Accessory materials, methods, tools, and equipment required for completion of insulation work.

PART 3 - EXECUTION

3.1 INSTALLATION

A. Install in accordance with manufacturer's instructions and provisions of Contract Documents.

B. Install insulation to provide continuity of insulating layer. Completely fill spaces within insulating cavity. Do not compress insulation.

C. Install insulation tightly around electrical outlets, switches, and other wall and ceiling penetrations. Seal joints.

3.2 FLOOR, ROOF, AND CEILING INSULATION INSTALLATION

A. Roof Ventilation: Provide insulation baffles and other means as necessary to prevent blocking of fresh air ventilation into enclosed spaces at insulated attic and roof framing spaces.

B. Insulation at Protected Roof/Ceiling Framing: Unfaced insulation.
1. Install between roof/ceiling framing members where gypsum board finish systems are installed directly to underside of framing.
2. Include attic areas where top side of framing is exposed.

C. Insulation at Open Roof/Ceiling Framing: Foil scrim kraft (FRK) or foil scrim polyester faced batt insulation. Install at roof/ceiling installations where framing systems and insulation facing will be left exposed to view above suspended ceiling systems.

D. Insulation Holder Assembly: Install fire rated system as instructed by manufacturer at all batt and blanket floor, roof, and ceiling insulation.

3.3 WALL INSULATION INSTALLATION

A. Exterior Walls - Thermal Insulation: Unfaced batt insulation. Friction fit between stud framing.

B. Interior Walls - Acoustical Insulation: Install friction fit unfaced batt insulation to completely fill width of stud and furring system space, except as otherwise indicated by Wall Type Schedule.

C. Supplementary Supports: When installed at walls in heights over 8 foot, or when recommended by manufacturer, provide supplementary support to hold unfaced friction fit insulation in place.

3.4 MINERAL WOOL BLANKET INSULATION

A. Tightly pack construction voids at interior wall, floor, and ceiling concealed spaces.

B. Tightly pack steel decking flute voids spanning over acoustical and exterior walls. Use in conjunction with metal form closure strips at steel stud construction.

C. Do not use as fire-safing to meet fire-stopping requirements, except as provided under work of Section 078400.

END OF SECTION

THIS PAGE INTENTIONALLY LEFT BLANK

SECTION 072126 - BLOWN INSULATION

PART 1 - GENERAL

1.1 SUBMITTALS

A. Product Data: Product characteristics, performance criteria, limitations.

B. Manufacturer's Installation Instructions: Include procedures for preparation and installation.

1.2 QUALITY ASSURANCE

A. Furnish and label cellulose loose fill insulation according to CPSC 16 CFR 1209 and CPSC 16 CFR 1404.

B. Insulation Installed in Concealed Locations Surface Burning Characteristics:
   1. Cellulose Loose Fill Insulation: Maximum 450 smoke developed index when tested according to ASTM E84.
   2. Other Loose Fill Insulation: Maximum 25/450 flame spread/smoke developed index when tested according to ASTM E84.

C. Insulation Installed in Exposed Locations Surface Burning Characteristics:
   1. Cellulose Loose Fill Insulation: Maximum 450 smoke developed index when tested according to ASTM E84.
   2. Other Loose Fill Insulation: Maximum 25/450 flame spread/smoke developed index when tested according to ASTM E84.
   3. Attic Floor Insulation: Minimum 0.11 Btu per sec per sq ft critical radiant flux when tested according to ASTM E970.

D. Apply label from agency approved by authority having jurisdiction to identify each package of cellulose loose fill insulation.

PART 2 - PRODUCTS

2.1 MANUFACTURERS

A. Manufacturers: Provide products from one of the following, orArchitect-accepted substitution complying with Section 012500:
   1. CertainTeed Saint-Gobain.
   2. International Cellulose Corp.
   3. Johns Manville
   4. Knauf Insulation
   5. Mountain Fiber Insulation
   6. Owens Corning
   7. US GreenFiber LLC

2.2 COMPONENTS

A. Fiber Fill Insulation: ASTM C764, mineral wool or glass fiber type, or ASTM C739, cellulose fiber type, bulk for pneumatic placement.

B. Ventilation Baffles: Formed plastic or metal.

C. Provide continuity of thermal barrier at building enclosure elements, in conjunction with Section 072116.

PART 3 - EXECUTION

3.1 INSTALLATION

A. Install insulation and ventilation baffles in accordance with manufacturer's instructions.

B. Place insulation against baffles. Do not impede attic ventilation.

C. Place against and behind mechanical and electrical services within plane of insulation.

D. Completely fill intended spaces. Leave no gaps or voids.

E. Repair and reseal insulation access ports. Refinish to match undisturbed Work.

F. Inspect areas for complete coverage. Fill voids.

3.2 SCHEDULES

A. Existing Exterior Walls: Pneumatically placed into wall stud spaces through port holes at exterior fascia board.

B. Attic Spaces: Pour insulation between ceiling joists to achieve R-Value indicated on Drawings.

END OF SECTION

SECTION 072500 - WEATHER BARRIERS

PART 1 - GENERAL

1.1 SUBMITTALS

A. Product Data: Manufacturer's product literature including product characteristics, performance characteristics, and limitations.

B. Manufacturer's Instructions: Include installation instructions, accessories, special procedures, and conditions requiring special attention.

C. Samples: System components including building wrap, self-adhering tapes and other membrane flashing, fabricated fenestration corner flashing, fasteners, and accessories as required to complete each for each weather barrier system, as specified and published in manufacturer's product data.

D. Evaluation Reports: For building wrap and flexible flashing, from ICC-ES, or other evaluation reports acceptable to authorities having jurisdiction.

1.2 QUALITY ASSURANCE

A. Single Source Responsibility: Furnish self-adhering membrane flashing, window flashing, corner flashing, and weather barrier membrane system as a system by a single manufacturer. Do not combine products from multiple manufacturers into a single system, except under a single source responsibility.
   1. Provide mockups as required to complete work of other Sections for mockups specified by those Sections.

PART 2 - PRODUCTS

2.1 SYSTEMS

A. Composite sheet membrane system as required for a weather barrier for building wall enclosure at sheathing, fenestrations, penetrations, and other openings.

B. Use corrugated/draining style weather barrier behind brick (e.g. VaproShield WrapShield), and Tyvek above brick and for other conditions. Use transition products that are suitable for each type of condition.

2.2 MANUFACTURERS

A. Manufacturers: Provide products from one of the following, or Architect-approved substitution.
   1. DuPont Tyvek (E. I. du Pont de Nemours and Co.) - Basis of Design Product specified in this Section.
   2. Henry Company (Fortifiber)
   3. VaproShield, LLC

2.3 REGULATORY REQUIREMENTS

A. IBC Chapter 14, including Section 1404 - Materials and 2510.6 - Water-resistive barriers.

B. ICC ES AC38 Acceptance Criteria for Water-Resistive Barriers.

2.4 BUILDING WRAP

A. DuPont, Tyvek Commercial Wrap.
   1. Water Vapor Transmission: 28 grams/m^2 in 24 hours, tested to ASTM E96 Method B.
   2. Water Penetration: 280 m^3, tested to AATCC-127.
   3. Moisture Barrier Fasteners: Staples, as instructed by manufacturer.
   4. Moisture Barrier Seam Tape: DuPont Contractor Tape or as instructed by manufacturer.

B. Henry Company, WeatherSmart Commercial (Fortifiber).
   1. Thickness: 0013 inch (13 mils).
   2. Moisture Vapor Transmission Rate: 8 perms, tested to ASTM E96 Procedure A (Dry Cup).

3. Water-Resistance:
   a. Boat Test: Pass 60 minute, tested to ASTM D779.
   b. Water Ponding: Pass greater than 24 hours, tested to CCMC 07102.
4. Dry Breaking Force: Tested to ASTM D5034.
   a. MD: 45 pounds.
   b. CD: 40 pounds.

C. VaproShield, WrapShield, pressure welded triple layer, spun bonded polypropylene.
1. Thickness: 0.0024 (0.06mm)
2. Moisture Vapor Transmission Rate: 50 perms, tested to ASTM E96.
3. Water Resistance: Pass, greater than 24 hours, tested to ASTM D779 Boat Test.
4. Tear Resistance: Tested to ASTM D1922.
   a. MD: 5.7 pounds.
   b. XD: 6.9 pounds.

2.5 SELF-ADHERING MEMBRANE FLASHING

A. Products: Provide one of the following, or Architect-approved substitution.
1. DuPont Tyvek Flashing Systems: Straightflash at jambs and heads of windows, and FlexWrap NF at sill pans. Other applications as recommended by manufacturer.
2. Henry, FortiFlash 40.
3. VaproShield, VaproFlashing.

B. Physical Properties: Minimum 30 mil thick, self-adhesive, SBS modified or rubberized asphalt air-barrier membrane.
1. Top Surface: Cross-laminated polyethylene.
2. Bottom Surface: Siliconized release film.
3. Elongation: 200 percent, tested to ASTM D412.
4. Tensile Strength: Tested to ASTM D412.
   a. Membrane: Minimum 400 psi.
   b. Film: Minimum 5000 psi.
5. Water Vapor Transmission: 0.05 perms, tested to ASTM E96.
6. Moisture Absorption: 0.1 percent, tested to ASTM D570.
7. Self-healing when penetrated by fasteners.
8. Widths: 6, 9, and 12 inch.

C. Primer: Synthetic rubber based adhesive, or as instructed by manufacturer to suit conditions.

2.6 FACTORY-FORMED FENESTRATION CORNER FLASHING

A. Products: Provide one of the following, or Architect-approved substitution.
1. DuPont: Preformed Inside and Outside Corners and End Dams.
2. Henry (Fortifiber), Moistop Corner Shield, 10 mil polyolefin pre-formed membrane flashing.
3. VaproShield, VaproFlashing, factory-formed corners, 18 inch by 18 inch, 0.0024 inch thick polypropylene, 212 perms water-vapor transmission to ASTM E96.

2.7 ACCESSORIES

A. Provide primers, sealants, tapes, foam insulation, drainage plane, gaskets for fasteners, and other accessories recommended by manufacturer for complete installation.

PART 3 - EXECUTION

3.1 INSTALLATION, GENERAL

A. Conform to manufacturer's instructions, warranty requirements, and provisions of Contract Documents.

B. Seal penetrations, and secure weather barrier at terminations.

3.2 SELF-ADHERING MEMBRANE FLASHING INSTALLATION

A. Apply membrane flashing tape continuously over joints, exposed edges, and wall penetrations at exterior wall sheathing as necessary to provide continuous seal against transmission of air through sheathing envelope.

B. Center 6 inch wide tape over sheathing joints and edges at wall corners.

C. Wrap 12 inch wide tape at windows and other wall openings to fill opening and provide minimum 8 inch coverage over face of sheathing, as shown on Drawings, and as instructed by manufacturer.

D. Wrap membrane into window inside corners at sills to make continuous watertight seal.

3.3 FACTORY-FORMED CORNER FLASHING

A. Install at window opening corners at sill in conjunction with self-adhering membrane flashing.

3.4 BUILDING WRAP INSTALLATION

A. Install over exterior sheathing according to manufacturer's written instructions and Contract Documents

B. Install minimum one layer over exterior sheathing according to manufacturer's written instructions.

C. Install rolls horizontally in weatherlapped fashion working from bottom to top of walls. Stagger vertical joints.

D. Install using fasteners in fastening pattern, covering fasteners at horizontal top edge, and seal joint overlaps with sealing tape.

E. Weatherlap to shed water. Begin installation from bottom and work up.
   1. Horizontal Laps: 6 inch
   2. Vertical Laps: 12 inch.

F. Seal top, bottom, and laps as necessary to prevent passage of air behind building wrap.

G. Repair tears and other penetrations by sealing with tape and fastening edges prior to covering.

END OF SECTION

THIS PAGE INTENTIONALLY LEFT BLANK

SECTION 072616 - BELOW-SLAB VAPOR RETARDERS

PART 1 - GENERAL

1.1 SUBMITTALS

A. Product Data: Manufacturer's literature for vapor retarder, seaming, patching materials, and accessories

B. Sample: Minimum 8-1/2 by 11 inch, showing conformance to specified requirements. Include accessory products associated with installation.

C. Certified Test Data: Test data for unconditioned and conditioned permeability, tensile strength, and puncture resistance of vapor barrier sheet, certified in writing from independent testing agency.

D. Manufacturer Instructions: Installation instructions, special procedures, and perimeter, penetration and other conditions requiring special attention. Include product limitations.

1.2 QUALITY ASSURANCE

A. Manufacturer Qualifications:
1. Able to show certified independent test data and documentation of properties meeting or exceeding specified criteria.
2. Employ locally available product representation with ability to lend technical assistance and job site instruction and inspection.

B. Geotechnical Report:
1. Available for bidders for information only, is not a Contract Document.
2. If Geotechnical Report recommendations differ from Contract Documents, verify with Architect.

C. Capillary Break:
1. Do not install sand layer or other granular fill over vapor retarder prior to placement of concrete slab-on-grade.
2. Subgrade Under Vapor Barrier: Crushed gravel base course.
3. Pea gravel as a subbase is not accepted due to inability to compact and tendency to displace during concrete placement leading to differential slab thicknesses.

PART 2 - PRODUCTS

2.1 BELOW-SLAB VAPOR RETARDER

A. Low Permeance Polyolefin Sheet, Minimum 15 Mil Thickness: ASTM E 1745, Class A, and with a maximum of 0.01 perms (grains/hr/sq.ft.) in accordance with ACI 302.2R, when tested according to ASTM E 96 Procedure B (water method). Include manufacturer's recommended adhesive or pressure-sensitive tape.

B. Provide products from one of the following, or Architect-approved substitution:
1. Fortifiber Building Systems Group, Moiststop Ultra 15.
2. STEGO Industries LLC., STEGO Wrap 15-mil Class A.
3. Reef Industries, Vaporguard.

C. Substitutions: Conform to provisions of Section 012500.

2.2 ACCESSORIES

A. Pressure Sensitive Tape, Seam Splice Tape Primer, Boots, Mastics, and Other Accessories: As instructed by manufacturer for watertight underslab vapor barrier meeting or exceeding specified criteria.

B. Termination Bar: Provide non-corrosive metal termination bar for below-slab vapor retarder.

2.3 BASE COURSE

A. 4 inches of granular fill.

B. Do not use a blotter layer between concrete slab on grade and vapor retarder.

C. Granular Base Course Under Vapor Retarder: Capillary break.
   1. Clean, dry, well graded, compactable crushed gravel with particle size passing through No. 3/4 inch sieve, 10 to 30 percent passing No. 100 (150mm) sieve, and less than 2 percent passing No. 200 sieve.
   2. Not contaminated by clay, silt, organic material, and other deleterious substances, as defined by ASTM C33 Table 1.
   3. Of type that will remain compacted and support tire of loaded cement truck without compressing more than 1/2 inch.

PART 3 - EXECUTION

3.1 INSTALLATION

A. Conform to ASTM E1643, manufacturer's instructions, and provisions of Contract Documents.

B. Provide vapor retarder under interior concrete slabs-on-grade, whether shown on Drawings or not.

C. Install continuous underslab vapor retarder with penetrations, transitions, and perimeters sealed as required to prevent unacceptable moisture vapor migration levels from diffusing through concrete slabs-on-grade into building spaces.

D. Lay out vapor retarder in widest practical width, parallel with direction of concrete pour, and with minimum number of joints.

E. Lap vapor retarder over footings, and turn up to full slab thickness, except as inhibited by reinforcing, water stops, and other impediments.

F. Seal with pressure sensitive tape or mastic to make continuous monolithic membrane moisture barrier at footings, columns, other penetrations, and terminations.

G. Seal with pressure sensitive tape or mastic to make continuous monolithic membrane moisture barrier at footings, columns, other penetrations, and terminations.

H. Termination Bar Installation:
   1. At perimeters, allow extra vapor retarder material so concrete when poured will not impose stress on vapor retarder.
   2. Predrill holes in substrates for expansion anchors.
   3. Apply butyl tape between vapor retarder and substrate.
   4. Secure termination bar to vertical surfaces with expansion anchors.

I. Seal pipes and other penetrations with vapor retarder or prefabricated boots and pressure sensitive tape.

J. Field-fabricate boots and other shapes as necessary to seal vapor retarder against vapor penetration.

K. Overlap vapor retarder side and end laps minimum 6 inches and seal with manufacturer's pressure sensitive tape.

L. Roll tape to remove wrinkles and to make continuous contact with vapor retarder, and to achieve water vapor-tight performance.

M. Place concrete slab-on-grade directly over installed vapor retarder under work of Section 033000. Do not install granular fill or sand layer over vapor retarder.

3.2 FIELD QUALITY CONTROL

A. Inspect competed installation prior to placing concrete slab-on-grade.

B. Verify vapor retarder installed with penetrations taped and sealed and in conformance with manufacturer's instructions and Contract Documents.

C. Verify that vapor retarder is free of penetrations by stake set screeds and that base set screed posts, reinforcing, and reinforcing chairs are positioned prior to concrete placement.

END OF SECTION

THIS PAGE INTENTIONALLY LEFT BLANK

SECTION 074213 - METAL WALL PANELS

PART 1 - GENERAL

1.1 SUBMITTALS

A. Shop Drawings: Minimum 1/4 inch scale wall elevations and details showing layout, location of panel joints, fastener types, details at panel laps, junctions with other materials, and dimensions.

B. Product Data: Manufacturer's technical data, standard detail drawings, and physical characteristics of panels and finishes showing conformance to this Section.

C. Samples:
   1. Panel: 12 inch long by full panel width showing metal gauge, and profile.
   2. Fasteners: Screws and washers.

D. Color Samples: 2.5 inch by 3.5 inch metal chips illustrating accepted finish.

E. Manufacturer's Instructions: Include installation requirements, tolerances, and recommendations, including specific conditions for this installation requiring special attention.

F. Field Quality Control Reports: Reports of manufacturer's field services.

1.2 QUALITY ASSURANCE

A. Single Source Responsibility:
   1. Provide system and components for this Section under responsibility of single metal panel manufacturer.
   2. Perform metal panel and related flashing and sheet metal work by or under supervision of single installer.

B. Manufacturer Qualifications: Company specializing in work of this Section with minimum 10 years documented experience fabricating and supplying products specified by this Section.

C. Installer Qualifications:
   1. Able to document minimum 5 years experience and 5 successful projects, installing work of comparable size and scope as work of this Project.

1.3 WARRANTY

A. Manufacturer Coating Perforation Warranty: Standard 20 year Warranty against rust, rupture, and structural failure of roofing panels due to deterioration of coating systems.

B. Manufacturer Fluoropolymer Coating Performance Warranty: Standard 20 year Warranty against fading, color change, chalking, peeling, cracking, or delaminating.

C. Contractor: 2 year labor Warranty for watertight integrity.

PART 2 - PRODUCTS

2.1 EXPOSED FASTENER WALL PANEL SYSTEM

A. Metal wall panel installed horizontally with exposed fasteners. Install over 2 ply building paper on plywood and gypsum sheathing with joints and openings sealed with waterproof tape. Fasten panels into wood stud wall framing.

B. Single Source Responsibility: Provide system and components specified in this Section under a single manufacturer's and installer's responsibility, for a complete and watertight system that complies with system warranty requirements.

2.2 SYSTEM

A. Install over 2 ply building paper on plywood and gypsum sheathing with joints and openings sealed with waterproof tape. Fasten panels into wood stud wall framing.

B. Manufacturers: Provide products from one of the following, or approved substitution.
   1. American Building Components.
   2. AEP Span.
   3. ATAS International, Inc.
   4. MBCI (Basis of Design to be determined by Architect).
   5. Morin; a Kingspan Group Company.
   6. NCI Group, Inc.

2.3 METAL WALL PANELS

A. Steel Sheet and Coil: 24 gauge, ASTM A792, Grade 40 (Minimum Fy = 40 ksi yield strength), Hot-Dipped Aluminum-Zinc Alloy Coating Designation AZ50 (55 percent aluminum-zinc alloy) coated both sides.

B. Panel Surface Finish: Smooth.

2.4 FASTENERS

A. Exposed Fasteners:
   1. Construction Fasteners, Inc., ZAC, self drilling, self tapping, non-corrosive fasteners with heads finished to match roofing panels and flashings, gasketed with EPDM washers, and as instructed by manufacturer.

B. Concealed Sheet Metal Fasteners: Panhead, self-drilling, self-tapping, non-corrosive fasteners, and as instructed by manufacturer.

2.5 FLASHINGS

A. Metal Flashing: 24 gauge steel same material, color, and finish as panels.

B. Provide custom metal flashing shapes to suit conditions for watertight installation

C. Panel and Flashing Closures: Waterproof, semi-rigid, polyethylene closed cell foam, or solid rubber in size and shape to tightly fit panel configuration.

2.6 FABRICATION

A. Standard Fabrications: Conforming to manufacturer's standard details.

B. Custom Fabrications: As needed to complete closure, present finished uniform appearance, and make complete watertight system.

C. Panel Length: Full height of wall. No end lap seams permitted.

2.7 FINISH

A. Steel Sheet and Coil Factory Finish:
   1. Weather Face: Polyvinylidene Fluoride (PVDF) coil coating with 70 percent Kynar 500 or Hylar 5000 resin content, conforming to AAMA 621, over aluminum-zinc alloy finished sheet steel.
      a. Primer: UV resistant, 0.20 mil thick epoxy modified acrylic.
      b. Color Coat: 0.80 mil PVDF.
      c. Color: As approved by Architect from manufacturer's complete selection of non-metallic colors.
   2. Non-Weather Face: 0.50 mil non corrosion-resistant primer and off-white topcoat.
      a. Primer: 0.15 mil.
      b. Finish Coat: 0.35 mil.

PART 3 - EXECUTION

3.1 INSTALLATION, GENERAL

A. Install in accordance with manufacturer's instructions and provisions of Contract Documents.

3.2 METAL PANEL CLIPS AND FASTENERS INSTALLATION

A. Space, locate, and align to meet Design Requirements and Regulatory Requirements, as instructed by manufacturer.

B. Roof, Wall and Soffit Panel Attachment:
   1. Secure panels in alignment with screw fasteners fully penetrating minimum 3/8 inch into solid framing at spacing as instructed by manufacturer.
   2. Torque screws as necessary for snug fit. Do not over-torque, to prevent oil canning of panels.

3.3 METAL WALL PANEL INSTALLATION

A. Lock panels in place to engage interlocking seams.

B. Face laps away from direction of prevailing winds.

C. Do not stretch or compress interlocks.

D. Secure panels in place without warp or deflection.

E. Make cutting and fitting neat, square, and true. Where required saw cut, de-burr edges, and clean filings from adjacent surfaces. No torch cutting permitted.

3.4 FLASHINGS

A. Panel and Flashing Closures: Install weathertight closures and stops in profiles to match roofing configuration.

B. Cutting and Fitting: Make neat, square, and true. Saw-cut, de-burr edges, and clean filings from adjacent surfaces. Do not cut with torch.

3.5 FIELD QUALITY CONTROL

A. Manufacturer Services: Review installation at 20 percent completion and again at system completion. Prepare Field Quality Control Report.

END OF SECTION

THIS PAGE INTENTIONALLY LEFT BLANK

SECTION 074646 - FIBER-CEMENT SIDING

PART 1 - GENERAL

1.1 SUBMITTALS

A. Product Data: Indicate materials, sizes, profiles, surface textures, fastening methods, and accessories.

B. Shop Drawings: Indicated fastening patterns.

C. Samples: Two siding samples and two trim samples conforming to specified or Architect accepted product

1.2 QUALITY ASSURANCE

A. Manufacturer: Company specializing in work of this Section with minimum 3 years documented experience in manufacturing products specified by this Section.

B. Installer: Company specializing in work of this Section with minimum 3 years documented experience installing work of this Section.

1.3 WARRANTY

A. Fiber-Cement Lap Siding Planks and Panels: Manufacturer's standard 15 year transferable Warranty against product failure, including cracking, rotting, delaminating. Product is Warranted to remain non-combustible.

B. MDO Plywood Trim: Manufacturer's standard 20 year Warranty against delamination and structural failure of substrate.

PART 2 - PRODUCTS

2.1 MANUFACTURERS

A. Products: Provide one of the following, or Architect-accepted substitution complying with Section 012500:
1. James Hardie Building Products, Inc., HardiPlank and HardiPanel
2. MaxiTile, Allura USA: MaxiPlank and MaxiPanel
3. Nichiha USA.

2.2 FIBER-CEMENT SIDING MATERIALS

A. Composition: Asbestos-free planks composed of Portland cement, ground sand, cellulose fiber, additives, and water, conforming to CABO NER-405 and ASTM C1186, Grade II, Type A.

B. Lap Siding Planks Physical Characteristics:
1. Thickness: 5/16 inch.
2. Length: 12 foot.
3. Surface Texture: As selected by Architect.
4. Plank Width:
   a. 12 inch (10-3/4 inch exposure).
   b. 7-1/2 inch (6 inch exposure).
5. Weight: 2.3 pounds per square foot.
6. Flexural Strength: ASTM C1185.
   a. Direction of Sheet: 1850 psi.
   b. Across Direction of Sheet: 2500 psi.
7. Thermal Resistance: R-0.15 at 5/16 inch thick.
8. Factory Primed Finish: Manufacturer's standard acrylic based primer.

C. Siding Panel Physical Characteristics:
1. Thickness: 5/16 inch.
2. Panel Sizes: 4 foot by 10 foot.
3. Surface Texture: As selected by Architect.
4. Weight: 2.3 pounds per square foot.

5. Flexural Strength: ASTM C1185.
6. Direction of Sheet: 1850 psi.
7. Across Direction of Sheet: 2500 psi.
8. Thermal Resistance: R-0.15 at 5/16 inch thick.

D. Trim Texture: As selected by Architect.

E. Provide products with factory-mitered corners.

F. Factory Primed Finish: Manufacturer's standard acrylic based primer on both sides and edges. Fire Resistance: Non-combustible, tested to ASTM E136.

G. Surface Burning Characteristics: IBC Class A, tested to ASTM E84.
1. Flame Spread: 0.
2. Smoke Developed: 5.

2.3 FASTENERS

A. Provide nails, stainless steel, non-corrosive, or hot-dipped galvanized, of type and size according to siding manufacturer's written instructions. Staples not accepted.

B. Comply with manufacturer's recommendations

C. Penetration Depth: As required to penetration minimum 1-1/2 inch into combination wood framing and plywood sheathing, except 1-1/4 inch penetration permitted for ring shank nails.

D. Pneumatic Nailing: Set nail gun at between 90 to 100 psf, and as needed to fit nail heads snug against panel surface without countersinking nail head into panel.

E. Pneumatic Nailing into Metal Studs: ET&F Fastening Systems, Inc., AGS-100 Series, pneumatically driven knurled shank hardened steel pins, using ET&F 510 nailing gun or as accepted by manufacturer.
1. Minimum 0.100 inch diameter.
2. Length to penetrate minimum 1/4 inch beyond steel stud framing.
3. Aericote 1000 corrosion-resistant coating.

F. Screw Fasteners: Special design for fiber-cement siding, self-drilling or self-tapping framing screws, corrosion resistant coating.
1. Standard gypsum board screws not accepted.
2. Other screws not accepted unless approved by the fiber-cement manufacturer.

G. Screw Fasteners: ASTM C1002, self-drilling, self-tapping framing screws, designed for gauge of framing, stainless steel or hot-dipped galvanized, and as accepted by fiber-cement manufacturer.

H. Blind Nailing:
1. Roofing Nails: 0.121 inch shank, 0.375 inch diameter head.
2. Siding Nails: 0.93 inch shank, 0.222 inch diameter head.

I. Face Nailing of Panels and Trim:
1. Common Nails. 0.118 inch shank, 0.267 inch diameter head.
2. Siding Nails: 0.089 inch shank, 0.221 inch diameter head.

2.4 ACCESSORIES

A. Starter Track System: Manufacturer's standard.

B. Weather-Resistant Barrier and Vapor Barrier at Wall Openings: Specified in Section 072500.

C. Metal Flashings: Specified in Section 076200.

D. Joint Sealants: Polyurethane, specified in Section 079200.

2.5 FINISHES

A. Siding and Trim: Factory pre-primed, ready for paint finish specified in Section 099000.

B. Contractor's Option: Prefinish panels and siding before installation.

C. Factory finish exposed fasteners to match surrounding siding color.

PART 3 - EXECUTION

3.1 INSTALLATION

A. Conform to manufacturer's instructions, Council of American Building Officials NER-405, and provisions of Contract Documents.

3.2 SIDING, PANEL, AND TRIM JOINTS

A. Do not butt joints. Leave 1/8 inch gap at joints between siding ends and joints between siding and trim.

B. Stagger siding end joints.
   1. Maintain minimum 24 inch offset between adjacent courses.
   2. Maintain minimum 24 inch overall offset of joints within each three courses.
   3. Do not align more than 4 joints over face of wall within a single floor level.

C. Seal paintable joints with paintable joint sealant as specified in Section 079200.

3.3 LAP SIDING INSTALLATION

A. Install siding and plywood panels over plywood furring for 1/2 inch clear continuous drainable rainscreen cavity space or 1/4 inch clearance over rainscreen drainage fabric.

B. Install lap siding starting from bottom of wall. Begin first course with a 1/4 inch starter strip or starter course. Maintain minimum 6 inch clearance above finished grade and paving at bottom course.

C. Nail Fastening:
   1. Blind nail siding at head laps using specified nails. Set nail on each side of lap siding joint.
   2. Position and set nails into solid stud bearing. Do not exceed 16 inch on center spacing.
   3. Drive nails perpendicular into siding and framing.
   4. Set heads snug and flush with face of siding plank. Do not over-drive or over-countersink nails.
   5. Set nails 1 inch clear of top edge of plank.
   6. Set nails 3/8 inch clear of and no further than 1/2 inch from side edges.

D. Screw Fastening:
   1. Blind fasten siding at head laps using specified screws. Fasten screw on each side of lap siding joint.
   2. Position and set screws into solid stud bearing. Do not exceed 16 inch on center spacing.
   3. Install screws perpendicular into siding and framing.
   4. Set heads snug and flush with face of siding plank. Do not over-drive or over-countersink screws.
   5. Install screws 1 inch clear of top edge of plank.
   6. Install screws 3/8 inch clear of and no further than 1/2 inch from side edges.

E. Head Laps: Maintain 1-1/4 inch head lap between each horizontal lap siding course.

F. Plank Lengths: Install in longest possible lengths with no plank less than 4 foot long.

3.4 PANEL INSTALLATION

A. Install panels with edges and ends bearing on solid framing or backing.

B. Install reveal, edge and corner trim as indicated on Drawings.

C. Install exposed fasteners with uniform spacing and consistent from panel to panel.

D. Caulk joints per Section 079200.

3.5 TRIM INSTALLATION

A. Install corner trim, head trim at top of wall, and other trim for tight closure. Miter or provide factory mitered joints at corners.

B. Install corner trim full length of run from soffit to bottom of siding or other natural termination points. Install other trim in longest possible lengths.

C. Nailing: Face nail wood trim with specified common nails.
   1. Spacing at Trim: Maximum 12 inch on center at horizontal trim and maximum 36 inch on center at vertical trim.
   2. Nail Penetration: 1-1/2 inch into combined sheathing and wood studs or other solid bearing.
   3. Set nails as necessary to avoid splitting of wood, nail pull-out, and visible nail patterns.
   4. Slightly recess face nails with a nail set.

D. Fastening: Face screw
   1. Spacing at Trim: Maximum 12 inch on center at horizontal trim and maximum 36 inch on center at vertical trim.
   2. Screw Penetration: 1-1/2 inch into combined sheathing and studs or other solid bearing.

3.6 INSTALLATION TOLERANCES:

A. Maximum Variation of Siding Courses: Plumb and level with 1/4 inch tolerance in 10 foot

B. Maximum Offset Joint Alignment: 1/16 inch.

END OF SECTION

SECTION 075423 - THERMOPLASTIC POLYOLEFIN (TPO) ROOFING

PART 1 - GENERAL

1.1 SUBMITTALS

A. Shop Drawings: Dimensioned drawings showing roof outlines, profile details of flashing methods for penetrations and terminations, and technical acceptance from manufacturer.

B. Product Data: Manufacturer's current product literature, installations instructions, and specifications.

C. Samples: Minimum 8 inch by 10 inch sample of membrane, membrane coated metal flashing, fasteners, and system components showing conformance to specifications.

D. Color Samples: Manufacturer's standard membrane colors.

E. Qualified Installer Certification: Manufacturer's written statement, signed by manufacturer's authorized representative, certifying roofing installer as trained and certified by manufacturer to perform work for this Project.

F. Product Certification: Manufacturer's written statement, signed by manufacturer's authorized representative, certifying conformance to provisions of Contract Documents including referenced standards.

G. Test Reports:
   1. Manufacturer's UL tested assembly for roof slopes and conditions of installation.
   2. NES National Evaluation Reports (NER) or ICC Evaluation Reports (ER) acceptable to authorities having jurisdiction.

H. Manufacturer's Instructions: Include manufacturer's guide specifications, installation requirements, special procedures, and conditions requiring special attention.

I. Warranty: Submit sample of warranty as specified.

1.2 QUALITY ASSURANCE

A. Installer:
   1. Company specializing in work of this Section.
   2. Trained and certified by manufacturer as authorized installer for work of this Project, authorized by manufacturer for Owner to receive system warranty.
   3. 5 years documented experience installing single ply roofing of comparable scope and type.
   4. Roofing Foreman:
      a. Minimum 2 projects installing manufacturer's system.
      b. On site for duration of roofing portions of Project

B. Single Source Responsibility: To the greatest extent possible, provide system and components under a single manufacturer's responsibility, for a complete and watertight system that complies with system warranty requirements. Where products are not available from the same manufacturer, submit certification of compatibility.

C. Single Installer Responsibility: Perform work of this Section and related flashings and other related components by or under direct supervision of roofing subcontractor, who is authorized by manufacturer for Owner to receive system warranty.

1.3 WARRANTY

A. Manufacturer's Roofing System Warranty: 15 year non-prorated, labor and materials watertightness System Warranty, including vapor retarder, rigid insulation, cover board, fasteners, and membrane as a complete roofing system.

B. Polyisocyanurate Insulation: Manufacturers 15 year Warranty of Long Term Thermal Resistance (LTTR) values conforming to manufacturers published data as tested to CAN/ULC-5770 / ASTM C1303.

C. Contractor's Warranty: 2 year workmanship warranty guaranteeing watertightness for system including at flashing, terminations, and penetrations.

PART 2 - PRODUCTS

2.1 MANUFACTURERS

A. Products: Provide one of the following, or Architect-accepted substitution complying with Section 012500:
   1. Carlisle SynTec Systems, Sure-Weld. (NER 575)
   2. Elevate, a Division of Holcim (Formerly Firestone): UltraPly TPO
   3. GAF: EverGuard TPO 60 mil.
   4. Versico Roofing Systems, a Division of Carlisle: Versiweld.

2.2 REGULATORY REQUIREMENTS

A. Underwriters Laboratories (UL): UL 790, Class A or B Fire Hazard Classification.

B. Comply with IGCC/IECC to perform 10 percent better than IECC values. IGCC refers specifically to 3 yr solar reflectance for low slope roofs.
   1. Carlisle Sure-weld: 0.70 ASTM C1549 > (0.55 * 110 percent).

2.3 ROOFING MATERIALS

A. TPO Roofing Membrane: Polyester scrim reinforced molecular bonded polyolefin conforming to ASTM D6878.
   1. Thickness: Minimum 60 mil (0.060 inch), tested ASTM D751.
   2. Breaking Strength: 225 pound-foot, tested ASTM D751.
   3. Tearing Strength: 55 pound-foot, tested ASTM D751.
   4. Brittleness Point: Minus 40 degrees, tested ASTM D2137.
   5. Ozone Resistance: Passes, no cracks, tested ASTM D1149.

B. TPO Membrane Flashing: Same material and thickness as roof membrane. Include manufacturer's standard prefabricated membrane configurations for flashing pipe penetrations, inside and outside corners, and other such conditions. Match color of roofing membrane

C. TPO Membrane Clad Metal Flashing: Manufacturer's minimum 35 mil non-reinforced TPO membrane laminated to 24 gauge galvanized sheet metal. Match color of roofing.

D. Traffic Membrane: Manufacturer's standard, minimum 2 foot wide, non-skid.

2.4 ROOF COVER BOARD

A. Products: Provide one of the following, or approved substitution.
   1. Georgia Pacific Gypsum LLC. (GP), DensDeck.
   2. USG Corp., SECUREROCK Brand Roof Board.

B. Material: ASTM C1177 glass mat faced, silicone-treated gypsum core panel, 1/4 inch thick.

2.5 RIGID FOAM INSULATION BOARD

A. Polyisocyanurate Rigid Insulation Board: Conforming to ASTM C1289, Type II, Class 1, Grade 2.

B. Provide layers of insulation board in thickness to achieve stabilized NRCA R-Value of minimum as indicated on Drawings.
   1. Tapered Insulation:
      a. Minimum 1/4 inch taper per foot.
      b. Taper two times roof slope at crickets.
      c. Minimum not less than 2-1/2 inch thick.
      d. Average minimum and maximum thickness to achieve required stabilized R-Value.

2.6 AIR AND VAPOR RETARDER

A. Adhesion Primer: As recommended by manufacturer.

B. Air and Vapor Retarder Sheeting: 6 mil polyethylene or thermoplastic polyolefin and double stick tape as instructed by manufacturer.

2.7 ADHESIVES

A. Bonding Adhesive for Fully-adhered Membrane Roofing and Membrane Flashing: As instructed by manufacturer.

B. Polyurethane Foam Insulation and Cover Board Adhesive (Option): Dual-component, low-rise, reaction-cure, polyurethane foam spray adhesive system, as instructed by manufacturer.

2.8 MECHANICAL FASTENERS

A. Insulation Fasteners into Decks: Self tapping, corrosion resistant.

B. Disks for Mechanically Attached Insulation: Corrosion resistant, of thickness and size recommended by manufacturer's written data for wind loads indicated.

2.9 ACCESSORIES

A. Solvent Cleaner: As instructed by manufacturer for removal of adhesive and contaminants from membrane.

B. Hot Air Welder: As instructed by manufacturer for membrane joint seaming.

C. Termination Bars and Mechanical Fasteners: As instructed by manufacturer.

D. Wood Nailers and Accessories: Preservative pressure treated.

E. Expansion Joints: Prefabricated expansion joint covers, and as instructed by manufacturer for expansion control of roofing areas.

F. Roof Drain Inserts: 0.080 spun aluminum, membrane coated, hot air weldable to roofing membrane and membrane flashing.

G. Roof Equipment: Coordinate with Mechanical.

H. Other Accessories: In conformance to manufacturer's instructions.

2.10 FINISHES

A. Membrane Roofing Color: Manufacturer's standard White color.

PART 3 - EXECUTION

3.1 EXAMINATION

A. Verify conditions as satisfactory to receive work of this Section. Do not begin work until correction of unsatisfactory conditions.

B. Decks:
   1. Surface: Free of protruding fasteners, depressions, fins, and raised edges.
   2. Condition: Structurally sound, dry, free of contamination.
      a. Verify that minimum concrete drying period recommended by roofing system manufacturer has passed.
      b. Verify that concrete substrate is visibly dry and free of moisture. Test for capillary moisture by plastic sheet method according to ASTM D4263.
   3. Weather and Environmental: Moisture, temperature, and other conditions in conformance to roofing manufacturer's instructions.

C. Work of Other Sections: Verify other work ready for work of this Section.

1. Metal Flashings: Specified Section 076200.
2. Wood Deck, Crickets, and Other Rough Carpentry: Under work of Section 061000.
3. Mechanical and Electrical roof penetrations.

3.2 PREPARATION

A. Roof Decks: Sweep and vacuum surfaces clean prior to roofing application.

B. Make provisions for roof accessories and equipment.

C. Crickets: Provide for positive drainage and for watertight installation as instructed by manufacturer.

3.3 INSTALLATION

A. Install in conformance to manufacturer's instructions and provisions of Contract Documents. Where in conflict, verify with Architect before beginning work.

B. Install roofing, insulation, flashings and accessories as single system under manufacturer's Warranty provisions.

C. Install only as much roofing as can be completed during same day or prior to commencement of inclement weather.

D. At completion of each day's work or at commencement of inclement weather, seal off membrane edges as instructed by manufacture as necessary to prevent water penetration beneath completed roofing.

3.4 AIR AND VAPOR RETARDERS

A. Install as required to meet required UL Fire Hazard Classification for roofing assembly

B. Prime wood deck with adhesion primer prior to installation self-adhered composite membrane.

C. Composite Self-Adhered Temporary Roof, Air, and Vapor Retarder Membrane:

D. Air Vapor Retarder Sheeting: Install loose laid over deck with edges overlapped minimum 3 inches and taped to hold in place.

3.5 RIGID INSULATION BOARD INSTALLATION

A. Install rigid insulation board in thickness to achieve stabilized R-Value to achieve R-value shown on Drawings.

B. Install with staggered end joints and side joints. Slope and align to make smooth terminations and tight meeting joints.

C. Cut and tightly fit rigid insulation to penetrations, projections, conduit, and other construction.
   1. Leave between 1/8 inch to 1/4 inch wide gap at adjacent board and construction.
   2. Fill gaps larger than 1/4 inch with rigid insulation cut to fit.

D. Stagger end joints of alternate rows of insulation board.

E. Install rigid insulation where possible in not less than 2 layers deep. Stagger joints of insulation layers with layer below to prevent thermal drift.

F. Adhered Insulation Systems: Polyurethane foam adhesive
   1. Wood Decking at Fully-adhered Systems: Adhere insulation board to composite temporary roofing, air, and vapor retarder membrane and subsequent insulation layers.

G. Mechanically Fastened Insulation Systems: Do not use at exposed to view ceiling areas.
   1. Penetrate wood deck minimum 3/4 inch.
   2. Penetrate steel deck minimum 3/8 inch. Fasten only through top flange of steel deck.

H. Temporarily hold insulation board in place with construction adhesive or other means acceptable to manufacturer prior to through fastening into place.

I. Slope and align edges and meeting joints to make smooth transitions and tight meeting joints.
   1. Install to prevent telegraphing of joints thorough membrane.
   2. Install tapered insulation at crickets, slopes to roof drains, around roof drains to create a sump, and roof areas requiring additional slope
   3. Comply with full R-value at 2 feet 0 inches away from roof drains. At that point, the full R-value is laid and the taper begins from there, to not less than minimum roof insulation thickness indicated for drains on Drawings. Average value or weighted average R-value is not acceptable.

J. Install no more rigid insulation than can be covered by completed membrane roofing during same day and before onset of inclement weather.

K. Apply cover board according to manufacturer's instructions. Provide cover board over insulated roof areas.

3.6 MEMBRANE ROOFING INSTALLATION

A. Fully-Adhered Roofing Membrane:
   1. Fully-adhere roofing membrane over rigid insulation board and cover board.
   2. Position sheet membrane in place.
      a. Fold sheet back so that half of underside is exposed.
      b. Lay in place free of wrinkles and buckles.

B. Mechanically Attached Membrane Roofing: Mechanically fasten with specified fasteners in accordance with manufacturer's Guide Specifications and with layout for wind loads indicated.
   1. Hold disks 1 inch minimum back from edge of membrane.
   2. Install in approved pattern with 6 inch minimum overlaps, shingled where possible to direct the flow of water.

C. Bonding Adhesive:
   1. Stir thoroughly scraping the sides and the bottom of the can. Do not thin.
   2. Apply bonding adhesive to underside of sheet membrane and corresponding surface using medium nap roller or spray equipment. Do not apply with brush.
   3. Back roll as necessary for full smooth, even coverage free of globs and puddles.
   4. Do not apply to membrane areas to be heat welded.
   5. Allow adhesive to dry until tacky or dry to touch but not stringy.
   6. Roll membrane to rest smoothly over adhesive coated substrate. Do not permit wrinkles.
   7. Promptly brush down bonded membrane with soft bristle brush or broom achieving complete contact between membrane and substrate.
   8. Repeat process for unbonded half of membrane and subsequent membranes.

D. Hot Air Welding:
   1. Position adjoining sheet membranes with minimum 2 inch to 2-1/2 inch overlap.
   2. Clean edges as instructed by manufacturer.
   3. Heat weld minimum 1-1/2 inch wide seam using automatic heat welding machine or hand held gun as instructed by manufacturer. Do not use hand held gun at field seams except for piece work.
   4. Manually probe entire length of seam with dull cotter key extractor after seam has cooled.
   5. Make other tests as instructed by manufacturer and as necessary to verify waterproof seams.

3.7 FLASHINGS AND TERMINATIONS

A. Perimeter Membrane Roofing Attachment: Securely attach roofing membrane at each perimeter condition including at walls, curbs, penetrations, expansion joints, and change of angle exceeding 2 vertical to 12 inch horizontal. Use fastening methods as instructed by manufacturer.

B. Membrane Flashing: Fully-adhere with bonding adhesive and hot air welded seams. Tie into manufacturer's termination bars, clad metal flashing systems, and as necessary to make watertight system.
   1. Parapets: Fully-adhere up parapet wall and over top of parapet. Cover with metal coping specified under work of Section 076200.
   2. Equipment Curbs: Install over wood curbs with membrane flashing adhered up and over curb.
   3. Roof Drains and Overflow Drains: Tie into roof drain and clamping ring. Coordinate with Plumbing.

4. Through-Wall Scuppers: Install membrane clad metal flashed scuppers welded to membrane flashing and roofing membrane.
5. Vent Stack Flashing and Pipe Penetrations: Install manufacturer's standard one-piece manufactured thermoplastic membrane pipe boots.
6. Corners: Install manufacturer's standard premolded inside and outside corners. Use un-reinforced membrane only at inside and outside corners and where reinforced membrane is not practical

C. Membrane Clad Metal Flashings:
1. Install to make watertight transitions at roofing and membrane flashing as shown on Drawings and as instructed by manufacturer.
2. Install concurrently with membrane roofing and membrane flashing installation.
3. Tie into metal flashing work of Section 076200.
4. Expansion Joints: Install in conformance to manufacturer's instructions at perimeter and membrane roofing areas where expansion control is required to relieve stress on membrane roofing.

3.8 TRAFFIC MEMBRANE

A. Install using manufacturer's standard method using bonding adhesive or hot air welding.

B. Pedestrian Walkway: Install 2 foot wide at roof areas subject to foot traffic including around mechanical equipment on roofing.

C. Splash Pad: Install 2 foot square membrane centered under downspouts that empty onto roofing.

3.9 FIELD QUALITY CONTROL

A. Manufacturer's Field Services: Perform inspections by manufacturer's authorized technical representative during interim and completion of roofing work of this Section. Note deficiencies and promptly make oral and written report to Contractor and Architect.

B. Contractor: Perform tests as instructed by manufacturer, including destructive tests at beginning and end of each hot air welding process.

C. Owners Field Inspections and Testing:
1. General: Conform to provisions of Division 01 Section for quality requirements.

END OF SECTION

SECTION 076200 - SHEET METAL FLASHING AND TRIM

PART 1 - GENERAL

1.1 SUBMITTALS

A. Shop Drawings: Describe general construction, configurations, material profile, jointing pattern, jointing details, fastening methods, and installation details.

B. Color Samples for Selection: For pre-finished metals. Provide complete line of color samples from manufacturer's selections.

C. Samples for Verification: Sheet metal samples, 3 by 5 inch, illustrating accepted colors and finishes.

1.2 QUALITY ASSURANCE

A. Qualifications:
   1. Fabricator and Installer: Company specializing in work of this Section with minimum 3 years documented experience installing commercial quality work.

1.3 WARRANTY

A. Pre-Finished Steel Sheet and Coil Coating Warranty: Manufacturer's 20 year Warranty against fading, color change, chalking, peeling, cracking, or delaminating.

B. Contractor: Provide 2 year material and labor weathertightness Warranty for work of this Section subject to conditions of ordinary wear and usage.

PART 2 - PRODUCTS

2.1 MANUFACTURERS

A. Basis of Design: MBCI. Coordinate with metal panels.

2.2 REGULATORY REQUIREMENTS

A. Wind Load Design: Conform to ASCE 7 and criteria indicated on Structural Drawings.

B. Edge Metal Securement: Conform to ANSI/SPRI ES-1.

2.3 SHEET METAL

A. Steel Sheet and Coil: Minimum 24 gauge, ASTM A792, Grade 40 (Minimum Fy = 40 ksi yield strength), Hot-Dipped Aluminum-Zinc Alloy Coating Designation AZ50 (50 percent aluminum-zinc alloy) coated both sides.

2.4 FASTENERS

A. Exposed Fasteners: Construction Fasteners, Inc., ZAC, No. 12 to 14 by 7/8 inch, self-drilling, self-tapping, non-corrosive fasteners with heads finished to match flashings, gasketed with EPDM washers.

B. Concealed Sheet Metal Fasteners: No. 12 to 14, panhead, self-drilling, self-tapping, non-corrosive fasteners, and as instructed by manufacturer.

2.5 ACCESSORIES

A. Single Pipe Flashing at Roofing Systems: Neoprene with 4 inch flange, and as accepted by manufacturer for type of roof system.

B. Solder (as applicable): Conform to ASTM B32, commercial quality, type suited to material to be soldered.

C. Plastic Cement: ASTM D4586, Type I.

D. Electrolytic Protection: Bituminous paint, tape, or other isolation treatments as accepted by Architect.

E. Miscellaneous: Incidental and accessory materials, methods, tools and equipment to complete work of this Section.

F. Joint Sealers: As specified Section 079200.
   1. Exposed to Ultra-Violet (UV): Silicone sealant.
   2. Concealed from UV: Non-skinning butyl.

2.6 REGLETS AND COUNTERFLASHINGS

A. Manufacturers: Provide products from the following, or approved substitution. Manufacturers of reglets and counterflashings include but are not limited to:
   1. Fry Reglet, Springlok.

B. Reglet and Counter Flashing Systems: 24 gauge galvanized or ASTM A792 zinc-aluminum alloy-coated steel with factory applied PVDF finish conforming to AAMA 661.

C. Types suitable for watertight installations.
   1. Concrete Masonry:
      a. Fry Reglet: MA Masonry Reglet.
   2. Cast-In-Place Concrete:
      a. Fry Reglet: CO Concrete Reglet.
   3. Other: As suited for purpose and as accepted by Architect. Include fitted and sealed end conditions, and inside and outside mitered corners.

D. Surface Mounted Reglet Types: Not accepted.

2.7 ROOF EDGE FLASHING

A. Roof Edge/Gravel Stop Flashing: 24 gauge galvanized or ASTM A792 zinc-aluminum alloy-coated steel with factory applied PVDF finish conforming to AAMA 661.

2.8 GUTTERS

A. Prefinished 24 gauge sheet steel, matching flashing and metal panel finish.

B. Free floating, gutter on continuous 22 gauge eave hanger.

C. Field roll form gutters in continuous 50 foot lengths.

D. Suspend from gutter cleat system without penetrating gutter.

E. Gutter Straps: 16 gauge, 2 inches wide at 18 inches on center.

F. Gutter Brackets: Conform to SMACNA Table 1-8 for recommended size for girth of gutter, and as shown on Drawings.

G. Front Edge of Gutter: Fabricate minimum 1 inch below back of gutter and as necessary for overflow water to spill over face of gutter.

H. Expansion Joints: Locate at equal distance between downspouts. Do not exceed 50 foot length of gutter without expansion joint.

I. Seams and Ends: Watertight.

J. Gutter Outlets: Size to fit minimum 4 inch deep into downspout.

K. Stand-offs: Fabricate of same gauge and finish as gutter and as necessary to hold gutters plumb and true off fascias.

2.9 DOWNSPOUTS

A. Steel Pipe or Tube Downspouts: 3-1/2 inch OD, Schedule 10 (approximately 11 gauge) ASTM A500 or Schedule 40. ASTM A53, Type E (electric resistance welded), Grade A or ASTM A135, hot-dipped galvanized inside and out, ready for painting under provisions of Section 099000. Provide shop assembled units with welded joints.

B. Downspout Hangers and Straps: Pre-primed 16 gauge sheet metal by 1 inch steel flat-stock, or 24 gauge by 1 inch wide, prefinished sheet steel, doubled with hemmed edges to form hangers, finished to match downspouts. Fabricate to hold downspouts tight to wall.
   1. Fasteners: Stainless steel for mounting to walls.
   2. New Construction: Stainless steel.

C. Downspout Cleanouts: ASTM A123 hot-dip galvanized steel plate, 3 inch square or as detailed, attach with 4 stainless steel threaded bolts, over 2 inch by 3 inch opening located at 12 inch from bottom of downspout.

D. Splash Pans: Pre-finished sheet steel of same color and gauge as sheet metal on project. Fabricate to SMACNA Figure 1-36 and verify with Architect.
   1. Provide at downspouts terminating above roof surfaces.
   2. Include elbow at downspout to direct water away from building.

E. Downspout Shoes:
   1. Cast Iron Downspout Shoes: Neenah Foundry Company or Architect-accepted substitution.

2.10 COPINGS

A. Fabricate from stainless steel, prefinished steel sheet, 24 gauge minimum, to match adjacent flashing and trim items.

B. Fabricate conductor heads with built-in overflow openings and with top of conductor not less than 1 inch below scupper.

C. Scuppers: Formed from continuous, fully-soldered stainless steel or heat-weldable aluminum. Integrate with the roof assembly to provide a continuous watertight assembly through the wall.

2.11 FLASHING AND SHEET METAL FABRICATIONS

A. Conform to SMACNA recommendations and provision of Contract Documents.
   1. Form true to shape, accurate in size, square, and free from distortion or defects, and in longest practical lengths.
   2. Provide expansion joints at maximum 40 foot intervals, and as shown on Drawings or recommended by SMACNA.

B. Stainless Steel Sill Pans: Form with hemmed edge, end dams and turned up inside leg, and as indicated, to prevent water infiltration into walls and to drain runoff to exterior.

C. Stainless Steel Head Flashings: Form with hemmed edge, and as indicated, above wall openings.

D. Cleats and Starter Strips: Fabricates of same material as sheet, in widths required by SMACNA to interlock with sheet.

E. Seams: Form flat seams, lock seams, standing seams, and other joinery to make watertight.

F. Vertical Faces: Fabricate with bottom edge formed outward 1/4 inch and hemmed to form drip. Hem exposed edges on underside 1/2 inch.

G. Corners: Miter and seam from one piece with minimum 18 inch long legs.

H. Solder and seal metal joints.
   1. After soldering, remove flux.
   2. Wipe and wash solder joints clean.

2.12 FINISHES

A. Steel Sheet and Coil: Factory pre-finished coil coating:
   1. Weather Face: Polyvinylidene fluoride (PVDF) coating with 70 percent Kynar 500 or Hylar 5000 resin content over aluminum-zinc alloy finished sheet steel.
   2. Non-Weather Face: 0.50 mil non corrosion-resistant primer and off-white topcoat.
      a. Primer: 0.15 mil.
      b. Finish Coat: 0.35 mil.
   3. Include strippable protective film for protection of prefinished steel finish.
   4. Sheet Metal Colors: Non-metallic color as accepted by Architect.

B. Steel Pipe and Tube Downspouts and Hangers: Shop prime, conforming to Section 055000 and field paint under work of Section 099000.

C. Prefinished Gutters and Downspouts: As selected by Architect from manufacturer's standard colors.

D. Field-Finished Metal: Shop prime, conforming to Section 055000 and field paint under work of Section 099000.

PART 3 - EXECUTION

3.1 SHEET METAL INSTALLATION

A. Install in conformance to SMACNA, NRCA, and provisions of Contract Documents.

B. Install flashings, counterflashings, copings, and other sheet metal fabrications to detail, conforming to SMACNA recommendations and as required for watertight installations.

C. Flash joints, terminations, and penetrations at roofing, door and window frames, and other construction.

D. Neatly form and finish joints and seams. Make lines, moldings, and edges sharp and true. Reinforce as required for stiffness.

E. Make surfaces free from waves and buckles. Build in expansion joints and make other provisions to allow for thermal expansion and contraction to prevent distortion and oil-canning.

F. Slope copings and other horizontal installations for positive drainage to shed water.

G. End Laps and Side Laps: Minimum 4 inch overlap with 2 continuous beads of non-skinning butyl and as required to make watertight.

H. Form sheet metal shapes with minimum 4 inch wide flanges.

I. Fasteners:
   1. Install exposed fasteners at concealed locations and concealed clips at exposed locations, except as otherwise accepted by Architect.
   2. Space fasteners conforming to provisions of SMACNA and NRCA.
   3. Install additional fasteners at each side of end laps as necessary secure flashing end laps from water intrusion.
   4. Seal penetrations through sheet metal and flashings by lapping with air barrier or with sealant.

J. Electrolytic Protection: Prevent galvanic action where dissimilar metals are in galvanic range of each other. Separate with tape, bituminous protective backing, 2 coats of bituminous paint, or other isolation methods.

3.2 GUTTER AND DOWNSPOUT INSTALLATION

A. Conform to SMACNA and provisions of Contract Documents.

B. Install continuous gutter cleats allowing for free thermal expansion and contraction.

C. Install steel gutter spacer straps and gutter brackets not exceeding 3 foot on center spacing.

D. Secure continuous eave hanger to solid wood framing.

E. Install conductor heads minimum 2 inch below scuppers.

F. Insert downspouts into downspout outlets and sweat solder into place.

G. Flash and seal with joint sealer for watertight connections and joints.

H. Install expansion joints and covers at continuous gutter sections at 50 foot on center. Provide exposed splice plates and expansion joint covers.

I. Support downspouts with downspout straps 8 to 10 foot on center, maximum, except not less than 2 per downspout. Space at even intervals.

J. Connect downspouts with neoprene downspout boot to below grade tightline storm drainage system. Do not connect into foundation drainage system.

OR

K. Fit downspouts into clamping ring at downspout boots. Connect to tightline storm sewer system. Do not connect into foundation drainage system.

L. Hold downspouts 1 inch clear from top of gutter outlets to allow for expansion.

3.3 JOINT SEALERS

A. Conform to provisions of Section 079200 and NRCA Manual, as required to make weathertight joints.

B. Overlapping Metal Flashing Joints: Install lap sealant at copings, reglets, counterflashing, gutters, and other continuous flashing joint overlaps.
   1. Install minimum one bead of butyl bedding sealant between flashing overlaps.
   2. Seal exposed open ends of flashing with silicon joint sealant.
   3. Install bead of butyl or silicone sealant at joints under cap flashing and overlapped flashing. Install minimum one bead of butyl bedding sealant or silicone sealant on each side of joint.
   4. Install one bead of butyl bedding sealant or silicone sealant between substrate and flush mounted reglets, termination bars, and other overlaps or metal to metal or metal to other construction.
   5. Do not compress sealant beads between overlapping flashing.

C. Sheet Metal Cover Plates: At cover plates under metal flashing joints, set minimum two beads of butyl bedding sealant between sheet metal at each side of joint.

END OF SECTION

THIS PAGE INTENTIONALLY LEFT BLANK

SECTION 078400 - FIRESTOPPING

PART 1 - GENERAL

1.1 SUBMITTALS

A. Product Data: Manufacturer product description, design and performance characteristics, and limitations for use within each firestop system.

B. Samples: Firestop system Warning Labels conforming to specified requirements.

C. Engineering judgments: Where UL tested/classified system is not available:
   1. Submit manufacturer's engineering judgment derived from similar UL system designs or other tests acceptable to local authorities having jurisdiction for their review and approval prior to installation.
   2. Engineer judgment drawings are required to follow criteria set forth by the International Firestop Council.

D. Design and Test Data: Include UL and other test data illustrating firestop system.
   1. Tested assembly conforming to UL 1479 (ASTM E814), UL 2079 (ASTM E1966), ASTM E2307, UL Fire Resistance Directory test data for each firestop system anticipated.
   2. Include tests for firestop systems installed into penetrations and construction joints subject to cyclic or other independent movement.
   3. Details for each firestop location illustrating tested assembly. Standard details are acceptable with location drawings.
   4. Schedule of firestop systems for each condition encountered or required.
   5. List of products used in each system.

E. Manufacturer's Certification:
   1. Installer: Trained by manufacturer to perform work of this Section.
   2. Firestop System at Exposed Surfaces: Paintable.
   3. VOC and Hazardous Materials: Non-toxic and free of asbestos and other hazardous materials
   4. Field Quality Control: Certify firestop system installation complete and conforming to manufacturer's instructions, requirements indicated, and rules and regulations of authority having jurisdiction (AHJ).

F. Manufacturer's Installation Instructions: Include procedures for each condition anticipated complete with drawings and tested assemblies.

G. Operations and Maintenance Manuals: Complete firestop system details and instructions. Include listing, location, and test for each type of firestop system condition on Project.

H. Instruction of Owner's Personnel: Instruct designated personnel in procedures required to maintain integrity of firestop systems and fire-resistance rated construction and assemblies.

1.2 QUALITY ASSURANCE

A. Manufacturer Qualifications:
   1. Company specializing in manufacturing and supplying work of this Section.
   2. Able to document minimum 10 year continuous experience.
   3. Supplying tested firestop systems conforming to provisions of this Section, and able to supply signed and sealed engineering judgments by accredited firestop engineers in case where tested systems do not exist.
   4. Maintain technical representatives and technical services locally available for identifying and verifying firestop systems conforming to provisions of this Section.
   5. Firestop Systems: Products by more than one manufacturer, are accepted under condition that:
      a. Only one manufacturer's product is installed consistently for each type of firestop system or condition of use.
      b. Firestop system products from different manufacturers are not permitted to be in contact with one another.

B. Installer Qualifications:

1. Trained and authorized by manufacturer to install manufacturer's firestop systems with certified documentation by manufacturer showing date and location of training.
2. Able to provide firestop systems conforming to Contract Documents and requirements of Authorities Having Jurisdiction (AHJ), signed and sealed by licensed firestop engineers.
3. Installer Single Source Responsibility:
   a. Penetration Firestop System: Provide by or under direct responsibility of single installer for mechanical, electrical, fire protection, telecommunication, and other membrane penetration and through-penetration firestop systems at fire-resistance rated assemblies.
   b. Construction Joint: Provide by or under direct responsibility of single installer for joints, openings, and voids at fire-resistance rated assemblies.
   c. Same installer is required to be responsible for all penetration firestopping and joint systems at fire-resistance rated assemblies.

C. Mockups: Install in accordance with Division 01 requirements for mockups, and the following:
1. Install mockups for each firestopping system, including typical penetrations, and construction joints, as required to maintain each fire-resistive rated assembly.
   a. System Components: Include as necessary to illustrate compete system for each hourly rating.
   b. UL Classified System: Attach drawing and instructions required for installation adjacent to each mockup. Do not remove prior to acceptance of mockup.
   c. Testing and Verification: Determine depth and configuration of each field-installed firestopping system. Destructive testing is not required for factory-metered systems.
2. Verify acceptance by Fire Marshal, Building Code Inspector, and other Authority Having Jurisdiction (AHJ).
3. Protect and maintain accepted mockup as standard of quality for work of this Section.
4. Approved mockups are accepted for incorporation into work of this Section.

PART 2 - PRODUCTS

2.1 REGULATORY REQUIREMENTS

A. IBC Chapter 7 for through-penetration systems, construction joint systems as required for maintaining fire-resistance rated construction.

2.2 MANUFACTURERS

A. Manufacturers: Provide products from one of the following, or approved substitution. Manufacturers of firestopping include but are not limited to:
1. Hilti, Inc.
2. Specified Technologies, Inc. (STI).
3. 3M Fire Protection Products.

B. Approved Substitutions: Architect-approved equal products submitted as specified for substitutions.

2.3 DESIGN CRITERIA

A. Firestop Systems: Provide fire barrier and smoke barrier firestop systems designed to resist flame, hot gases, and smoke as required to maintain fire-resistance rated assemblies at through-penetrations, membrane penetrations, construction joints, openings, and voids.

B. Fire-Resistive-Rated Walls -Through Penetrations and Membrane Penetrations:
1. Steel, Ferrous, or Copper Pipes, Tubes, or Conduits at Fire-Resistance-Rated Walls and Partitions:
   a. Provide firestop systems to maintain fire-resistance rated assemblies to fill annular spaces to prevent passage of flame and hot gases sufficient to ignite cotton waste, as tested to ASTM E119 or UL 263 time-temperature fire conditions with a minimum positive pressure differential of 0.01 inch of water for time period equivalent to fire-resistive rating of construction penetrated.

2. Refer to IBC exceptions at membrane penetrations, including for electrical boxes of less than 16 square inch and 100 square inch area, pipes and tubes of maximum 6 inch diameter, and fire-sprinklers with escutcheon plates.
3. Through-Penetration Firestop System - F Rating: Not less than time period for fire-resistance rating of wall penetrated.
4. Membrane Penetration by Boxes Other than Electrical Boxes - F and T Rating: Not less than time period for fire-resistance rating of wall penetrated and installed according to their listing.

C. Fire-Resistive-Rated Horizontal Assemblies -Through-Penetration and Membrane Penetrations: As tested to ASTM E814 or UL 1479.
1. Steel, Ferrous, or Copper Pipes, Tubes and Vents, and Concrete and Masonry Items at Fire-Resistance-Rated Horizontal Assemblies:
a. Provide firestop systems to maintain fire-resistance rated assemblies, to fill annular spaces to prevent passage of flame and hot gases sufficient to ignite cotton waste, as tested to ASTM E119 or UL 263 time-temperature fire conditions with a minimum positive pressure differential of 0.01 inch of water for time period equivalent to fire-resistive rating of construction penetrated.
b. F and T Ratings: Not less than time period for fire-resistance rated assembly.
1) Exception: Floor penetrations located within a wall cavity or enclosures do not require a T Rating.
2. Provide firestop systems at non-fire-resistance rated horizontal assemblies for firestop systems where penetrating items connect more than one horizontal assembly or non-combustible penetrating items connect than three horizontal assemblies.

D. Air Leakage Rate (L Rating) at Penetrations in Smoke Barriers: As tested to UL 1479 for air leakage at 0.30 inch of water for both ambient temperature and elevated temperature tests. Do not exceed:
1. Through-Penetration and Joint Firestop Systems: 5.0 cfm per sf of penetration opening.
2. Wall Areas and Floor Areas: Total cumulative leakage of 50 cfm per 100 sf.

E. Fire-Resistant Joint Systems: As tested to ASTM E1966 or UL 2079.
1. Provide approved fire-resistant joint systems designed to maintain fire-resistance rated assemblies by resisting passage of flame and hot gas for time period of not less than time period for fire-resistance rated assembly
2. Refer to exceptions for where fire-resistive joint systems are not required including control joints not exceeding a maximum width of 0.625 (5/8) inch and tested to ASTM E119 or UL 263.
3. Refer to testing provisions for fire-resistant non-symmetrical wall joint systems and exception for walls with horizontal fire-separation distance of greater than 5 foot.

F. Air Leakage Rate (L Rating) at Fire-Resistive Joint Systems in Smoke Barriers: As tested to UL 2079 for air leakage. Do not exceed 5 cfm per lineal foot of joint at 0.30 inch of water for both ambient and elevated temperature tests.

2.4 PERFORMANCE CRITERIA

A. Intumescent Firestop Systems: Provide systems to maintain F Ratings, including collars and putties, designed to expand, fill, and close off openings where penetrating materials are subject to combustion, melting, or deformation (such as plastic pipe, cable jacketing and pipe insulation).

B. Joints and Penetrations Subject to Movement or Vibration:
1. Provide firestop systems incorporating flexible sealants or moldable putties tested to provisions of this Section for cyclic movement.
2. Cement mortar firestop systems not accepted.

C. Cement Mortar Firestop Systems:
1. Accepted for reducing large openings used in conjunction with intumescent firestop systems.
2. As accepted by Architect as a single system where no vibration or movement of joints and penetrating materials occur. Not accepted for telecommunication cables and other penetrants that require modifications to firestop systems.

D. Firestop Mortars and Sealants: Suitable for firestopping horizontal or vertical applications, including large openings, with no shrinkage during curing process. Types that shrink, become brittle, crack, pull back from contact surfaces, or dissolve in water after curing are not accepted.

E. Cast-In-Firestop Systems Devices: Injection molded plastic insert with integral intumescent insert or collar designed for casting into concrete fire-resistance rated assemblies for through-penetrations of pipes.
   1. Accepted for cast-in-place concrete installations.
   2. Include plastic top and bottom closure caps.

F. Low Voltage Cable Pathway Devices: Devices with integral, non-removable, twist-seal for L rating with cable bundles in center of device, and intumescent firestop material inside that allows cable to be pulled through and removed continuously over time without need to adjust device or remove firestop material.
   1. Maintain fire-resistant assembly and smoke leakage whether device is loaded with cable or empty. Cable arrangement should be bundled (if more than on cable) and allow the placement at center of device.
   2. Locate at through-penetrations of low voltage telecommunications cable.

G. Pillow Firestop Systems: Intumescent firestop systems material designed to fill large openings and penetrations that are too large for other systems. Dust free, impervious to water, humidity, frost, and ultra violet (UV) degradation.
   1. Accepted for use at large fire-resistance rated wall opening where through-penetrations, such as telecommunications cables and pipes, are to be continuously removed and replaced over time and where opening is too large for a metal box device specified by this Section.
   2. Not accepted in finished room areas other than utility areas, except as accepted by Architect.

H. Paintability: Provide paintable firestop systems at exposed surfaces designated to receive paint, adhesive coatings, and other finish applications. Do not use silicone sealants.

I. Restoration Characteristics: Removable and repairable, allowing full restoration of fire-resistance rated assembly when membrane penetrations and through-penetrations are removed, added, or replaced.

J. Hazardous Material Content: Free of asbestos, solvents containing high volatile organic compound (VOC) content, and other hazardous substances, including pentabrominated diphenyl ether, octabrominated diphenyl ether, and decabrominated diphenyl ether.

K. Fire-Resistance Rating of Fire Stop Components: UL Class A, as tested to ASTM E84.
   1. Flame Spread: Less than 20, not contributing to combustion.
   2. Smoke Developed: Less than 450.

2.5 MATERIALS

A. Firestop System Materials: Conform to specified provisions of this Section including Design Criteria, Performance Criteria, and other requirements by Authorities Having Jurisdiction.

B. Provide components including mortars, sealants, putties, collars, wrap strips, mineral wool fire safing, devices, and accessories as required to complete each Firestop system, conforming to manufacturer's instructions and provision of Contract Documents.

2.6 ACCESSORIES

A. Low Voltage Cable Pathway Devices: Firestop designed to penetrate through wall system and allow easy removal and replacement of cables and other insertions without loosing UL 1479 L-Rating.
   1. Hilti North America, CP653 Speed Sleeve.
   2. Specified Technologies, Inc. (STI), EZ-Path.
   3. 3M Fire Protection, Pass Through Devices.

B. Fire-Rated HVAC Retaining Angles: Steel angle system with integral intumescent firestop gasket for use on steel HVAC ducts.
   1. Specified Technologies, Inc. (STI) SpecSeal FyreFlange Firestop Angles, or Architect-approved substitution.

C. Firestop Plugs: Re-enterable, foam plug impregnated with intumescent material for use in blank openings and cable sleeves.
   1. Hilti North America, CP658T Firestop Plug.
   2. Specified Technologies, Inc. (STI) SpecSeal Series FP Firestop Plug.
   3. 3M Fire Barrier Pillows for use in sleeves or blank openings.

D. Fire-Rated T Rating Collar Device: Collar system with coolant wrap installed on metallic pipes where T Ratings are required.
   1. Specified Technologies, Inc. (STI) SpecSeal T-Collar Device.
   2. 3M 615+ Blanket for UL Listed T Rating Applications.
   3. Architect-approved substitution.

E. Fire-Rated Cable Grommet: Molded two-piece grommet made from plenum grade polymer with a foam inner core for sealing individual cable penetrations up to 0.27 inch diameter.
   1. Specified Technologies, Inc. (STI) Ready Firestop Grommet, or Architect-approved substitution.

F. Cast-In Floor Sleeves: Water, fire, and smoke tight, conforming to UL 1479 for L and W rating.

G. Firestop System Warning Label: Minimum 3 inch by 5 inch label. Red color or with red colored type. Adhesive backed or other means for permanent attachment. "WARNING" written in bold type. Identify or include spaces for following information:
   1. Name of manufacturer.
   2. Name of installer.
   3. Date firestop system was installed.
   4. Firestop System Assembly Reference Number included in O&M Manual.
   5. Firestop System UL number or manufacturer's engineered design number.
   6. F Rating and T Rating (as applicable).

H. Firestop System Warning Labels:
   1. Install labels with information for identifying firestop system as specified this Section.
   2. Locate at firestopped openings and penetrations, except at finished surfaces, exposed to view.

2.7 IDENTIFICATION OF RATED WALLS

A. Fire walls, fire barriers, fire partitions, smoke barriers and smoke partitions or any other wall required to have protected openings or penetrations shall be effectively and permanently identified with signs or stenciling. Such identification shall:
   1. Be located in accessible concealed floor, floor-ceiling or attic spaces; and
   2. Be located within 15 feet of the end of each wall and at intervals not exceeding 30 feet measured horizontally along both sides of the wall or partition; and
   3. Include lettering not less than 3 inches in height with a minimum 3/8 inch stroke in a contrasting color, incorporating the suggested wording: "_ HOUR FIRE/SMOKE WALL or FIRE/SMOKE BARRIER - PROTECT ALL OPENINGS AND PENETRATIONS" or similar wording. Confirm wording with AHJ (Authority Having Jurisdiction). Replace "_" with the appropriate designated hourly rating.

B. Refer to the Drawings for locations of walls and applicable ratings.

C. Provide identification in accordance with Division 09 painting Specifications or Division 10 signage Specifications. Manufacturers of signs that can be selected from per specified requirements and ordered for this purpose include but are not limited to:
   1. Fire Wall Signs, Inc.; http://www.firewallsigns.com/.
   2. MySafetySign.com; http://www.mysafetysign.com/fire-wall-signs.
   3. ComplianceSigns, Inc.; http://www.compliancesigns.com/customsigns.shtml.

2.8 INSTALLATION

A. Conform to manufacturer's instructions and provisions of Contract Documents as required to maintain fire-resistance-rated assemblies.

B. Install approved designed and tested firestop systems as required to prevent passage of flames, hot gases, and excessive heat from passing through penetrations and joints.
   1. Penetration firestop systems at ducts, pipes, conduit, cable, and sleeves penetrating fire-resistance rated assemblies.
   2. Construction joint firestop systems at head-of-wall and other joints, voids and other openings within at fire-resistance rated assemblies.
   3. Exterior firestop systems as required to maintain fire-resistance rated assemblies at curtain wall and floor intersections.

C. Install mineral wool at joints and openings with layers or grain of mineral wool laid parallel, exerting positive pressure, against joint and opening.

D. Install firestop system sealants at joints and openings conforming to ASTM C1193.

E. Tool non-sag sealants in place to force sealant into joints to compress, shape, eliminate air pockets, and completely adhere to contacting materials.

F. Completely fill voids and cavities within openings and penetrations with Firestop system.

G. Tool visually exposed fireproofing to make smooth, uniform, finished surfaces.

2.9 FIELD QUALITY CONTROL

A. Field Quality Control Testing and Inspections: Contractor-Engaged: Conduct inspections by independent third-party testing agency accepted by Architect and Owner.
   1. Testing procedures of ASTM E2174 and ASTM E2393 as applicable.
   2. Perform destructive testing of 3 firestop systems at random to determine conformance to specified requirements and code provisions to maintain fire-resistive construction using tested assemblies conforming to provision of this Section.
   3. Report conforming to provisions of ASTM E2174 and ASTM E2393 and distribute to Owner, Contractor, and Architect.
   4. Do not proceed to enclose and conceal firestop system with other construction until testing and verification of conformance of firestop system to provisions of this Section.

END OF SECTION

SECTION 079200 - JOINT SEALANTS

PART 1 - GENERAL

1.1 SUBMITTALS

A. Product Data: Joint sealant and backer material types, chemical characteristics, performance criteria, and limitations.

B. Color Samples:
   1. Manufacturer's standard selection: Submit on joint sealer material. Reproductions not accepted.
   2. Custom color samples: Submit additional custom color samples as directed by Architect.

C. Backer Material Samples: Backer rod and precompressed foam joint sealant.

1.2 QUALITY ASSURANCE

A. Installer Qualifications: Company specializing in work of this Section with minimum 5 years continuous documented experience for commercial quality joint sealant work comparable to Project scope.

B. Single Source Responsibility: Provide field-installation of exterior joint sealers specified by this Section under responsibility of a single installer.

C. Preconstruction Testing: Make tests by authorized product technical representative. Determine compatibility of exterior silicone sealants with substrates as necessary to conform to manufacturer's Warranty provisions.
   1. Test in accordance with ASTM C1521, using Destructive Tail Procedure. Include, at a minimum, 20 tests per first 1000 linear feet installed and 5 tests per 1000 linear feet thereafter.

D. Mockups: Install in accordance with Division 01 requirements for mockups, and the following:
   1. Conduct mockups of joint sealing systems specified by this Section as part of system mockups as specified by related sections for purpose of verifying visual appearance, water and air infiltration testing, conducting pull tests to determine correct use of cleaning and primers, and to aid in determining general adequacy of system design.
   2. Include for concrete systems, masonry mockup walls, wall cladding, roofing and waterproofing systems, and window systems.
   3. Include system components such as backing materials and bond breakers.
   4. Verify need for primers and other pre-installation preparation for each surface.
   5. Inspect mockups after 14 days and perform pull test under supervision of manufacturer's representative to determine suitability and primer requirements.
   6. Make adjustments as needed for acceptance conforming to manufacturer's instructions and provisions of Contract Documents.
   7. Do not proceed with remaining work until mockup is accepted by Architect.
   8. Identify, protect, and maintain accepted mockup as standard of quality for work of this Section.
   9. Incorporate accepted mockups into Project. Refinish mockup area as required to produce acceptable work.

1.3 WARRANTIES

A. Manufacturer:
   1. Exterior Joint Sealants Subject to Direct UV Exposure: 20 year Warranty against failure of materials due to breakdown of sealants, except horizontal traffic sealants.
   2. Interior Joint Sealants: Standard 5 year Warranty against failure of materials.

B. Contractor: 5 year labor Warranty of exterior joint sealants against failure, except at horizontal paving.

PART 2 - PRODUCTS

2.1 SYSTEMS

A. Exterior and interior joint sealant systems installed with pressure gun.

B. Backer rod as required for hourglass shaped geometry at open joints subject to water penetration. Not required at bedding for thresholds, sheet metal lap seams, paintable interior joints using latex sealants, concealed sealants at gypsum board.

C. Precompressed foam joint sealant backup sealant at masonry and other rainscreen weather joints.

D. Sealing of vertical and horizontal construction joints, making air and watertight.

2.2 JOINT SEALANTS

A. Joint Sealant Manufacturers:
1. Master Builders Solutions, a brand of MBCC Group (formerly BASF/Sonneborn).
2. DOW Inc.
3. Momentive Performance Materials Inc.; GE Silicones
4. Pecora Corporation
5. Sika Corporation
6. Tremco Inc.; Sealants & Waterproofing Division

B. Precompressed Foam Joint Sealant Manufacturers:
1. Master Builders Solutions, a brand of MBCC Group (formerly BASF/Sonneborn).
2. Emseal Joint Systems, Ltd.
3. Tremco Inc.; Sealants & Waterproofing Division

C. Approved Substitutions: Conform to provisions of Section 012500.

D. Compatibility: Provide joint sealants, backings, and other related materials that are compatible with one another and with joint substrates under conditions of service and application, as demonstrated by joint-sealant manufacturer, based on testing and field experience.

E. Comply with ASTM C920 and other requirements indicated for each joint sealant specified, including those referencing classifications for type, grade, class, and uses related to exposure and joint substrates.

F. Provide exterior silicone joint sealant products that have a validation certificate from the Sealant, Waterproofing and Restoration Institute (SWRI).

2.3 EXTERIOR JOINT SEALANTS - SILICONE WEATHER BARRIER SEALANT

A. Silicone, Weather Barrier Sealant: Single-Component, Nonsag, Neutral-Curing Silicone Joint Sealant: ASTM C920, Type S, Grade NS, Class 25, for Use NT; tested and marketed specifically for sealing air barrier and vapor retarder sheets to common building materials, such as aluminum, vinyl, PVC, powder coat, paint and fluoropolymer coatings; UV resistant.
1. Products: Subject to compliance with requirements, provide one of the following:
   a. Dow: DOWSIL 758.
   b. Pecora: AVB Silicone.

2.4 EXTERIOR JOINT SEALANTS - VERTICAL JOINTS

A. Porous Materials Adhered to Porous Materials, Weatherproofing Sealant, Non-Paintable:
1. Joint Movement Capabilities: 100 percent extension and 50 percent compression in accordance with ASTM C719.
2. Single Component Silicone: ASTM C920, Type S, Grade NS, Class 100/50, Use T, NT, M, G, A, and O.
   a. Dow: DOWSIL 790
   b. Pecora 890
   c. Tremco Spectrem 1
   d. GE SilPruf LM SCS2700

B. Non-Porous Materials Adhered to both Porous and Non-Porous Materials, Weatherproofing Sealant, Non-Paintable. Neutral curing.
1. Joint Movement Capabilities: 50 percent extension and 50 percent compression in conformance to ASTM C719.

2. Single Component Silicone: ASTM C920, Type S, Grade NS, Class 50, Use NT, M, G, A, and O.
   a. Dow: DOWSIL 791, DOWSIL 795, or DOWSIL 756 SMS.
   b. Pecora 895 or 865
   c. Tremco:
      1) Spectrem 1: 100 percent extension and 50 percent compression
      2) Spectrem 2 / Tremco Spectrem 3 / Tremco 4: 50 percent extension and 50 percent compression
   d. GE SilPruf SCS2000 or GE SilPruf NB SCS9000.
3. Single Component Silyl-terminated polyether (STPe): ASTM C920, Type S, Grade NS, Class 50, Use NT, T, M, G, A, and O.
   a. Master Builders Solutions, a brand of MBCC Group (formerly BASF): MasterSeal NP 150
   b. ChemLink DuraLink

C. Non-Porous Materials Adhered to Non-Porous Materials, Structural Sealant, Non-Paintable: Includes glass to glass and glass to metal at aluminum curtain wall.
1. Joint Movement Capabilities: 50 percent extension and 50 percent compression in accordance with ASTM C719.
2. Single Component Silicone: ASTM C920, Type S, Grade NS, Class 50 Use NT, M, G, A, and O.
   a. Dow: DOWSIL 795 or DOWSIL 995, accepted at glass to non-porous materials
   b. Pecora 895
   c. Tremco Spectrem 2
   d. GE SilPruf SCS2000

D. Joints and Cracks Receiving Painted Coating over Sealant: Verify compatibility with coating system.
1. Joint Movement Capabilities: Polyurethane and STPe: Minimum 100 percent expansion and 50 percent compression in accordance with ASTM C719.
2. Single Component Polyurethane Sealant: ASTM C920, Type S, Grade NS, Class 50, Use NT, M, A, G, and O.
   a. Sika Sikaflex15LM
   b. Tremco Vulkem 921
3. Single Component Silyl-terminated polyether (STPe): ASTM C920, Type S, Grade NS, Class 50, Use T, NT, M, A, G, and O.
   a. ChemLink DuraLink
   b. Master Builders Solutions, a brand of MBCC Group (formerly BASF/Sonneborn): MasterSeal NP 150

2.5 NON-POROUS MATERIALS ADHERED TO AIR-BARRIER MEMBRANE SYSTEMS

A. Neutral cure, one-part silicone sealant, designed for adhering to horizontal and vertical low energy surfaces including polyethylene, polyolefin, elastomeric liquid-applied air and weather barrier systems, and coated metal flashing systems. Refer to manufacturer's tested systems.
1. Single Component Silicone: ASTM C920, Type S, Grade NS, Class 25, Use NT, M, G, A, and O.
   a. Dow: DOWSIL 758.
2. Single Component Silyl-terminated polyether (STPe): ASTM C920, Type S, Grade NS, Class 50, Use NT, M, A, G, and O.
   a. ChemLink DuraLink.
   b. Master Builders Solutions, a brand of MBCC Group (formerly BASF/Sonneborn): MasterSeal NP 150

2.6 EXTERIOR BEDDING SEALANT - HORIZONTAL AND VERTICAL JOINTS

A. Bedding and Threshold Sealants Concealed from UV:
1. Non-Skinning Butyl Bedding Sealant: Installed over polyethylene backer rod or tape bond-breaker.
   a. Tremco Curtainwall Sealant.
   b. Pecora BA-98.
   c. Sikaflex 511.
2. Consistency for use with gun or knife without paint finish, light gray color.

2.7 INTERIOR JOINT SEALANTS

A. Mildew-Resistant Joint Sealants:
   1. ASTM C920, Type S, Grade NS, Class 25, Use NT.
      a. Master Builders Solutions, a brand of MBCC Group (formerly BASF/Sonneborn): Sonolastic 150.
      b. Dow: DOWSIL 786-M White.
      c. GE Construction Sealants Sanitary SCS1700.
      d. Pecora 898.
      e. Sika Corp Bondaflex Sil 100 WF.
      f. Tremco Tremsil 200.

B. Other Exposed Joint Sealants, General Use:
   1. ASTM C834.
   2. Paintable Siliconized Acrylic Latex Joint Sealant:
      a. ChemLink TrimCaulk.
      b. Pecora AC-20 + Silicone Acrylic Latex.
      c. Tremco Tremflex 834.
      d. Master Builders Solutions, a brand of MBCC Group (formerly BASF/Sonneborn): MasterSeal NP 520, acrylic latex.
      e. GE RCS20 siliconized acrylic latex

C. Horizontal Cementitious Joints:
   1. ASTM C920, Grade P, Class 25, Use T.
   2. Single Component Polyurethane Joint Sealant: Type S.
      a. Sikaflex 1CSL.
      b. Master Builders Solutions, a brand of MBCC Group (formerly BASF/Sonneborn): MasterSeal SL1, Type S, Grade P, Class 25, Use T, M
   3. Two-Component Polyurethane Joint Sealant: Type M, self-leveling traffic sealant chemical-cure:
      a. Master Builders Solutions, a brand of MBCC Group (formerly BASF/Sonneborn): MasterSeal SL 2.
      b. Sika Sikaflex-2c SL.
      c. Tremco THC-900/901.
   4. Single-Component, Silyl-terminated polyether (STPe) Joint Sealant: Type S, Grade P self-leveling.
      a. ChemLink NovaLink SL.

2.8 JOINT SEALANTS SPECIFIED ELSEWHERE

A. Refer to Related Sections, including Section 033000 for polyurea and epoxy sealants, Section 078400 for firestopping sealers, Section 079219 for acoustical sealants, Section 093013 for ceramic tile joint sealants, and Civil for sealants specified for exterior horizontal joints.

2.9 BACKER MATERIAL

A. Backer Rod: Non-adhering, closed cell polyethylene foam or skinned open cell polyethylene foam (soft rod) as instructed by joint sealant manufacturer.
   1. Diameter: 1/3 greater than width of joint where it is to be installed.
   2. Polystyrene foam and open cell rods not accepted.

B. Precompressed Foam Joint Sealant: Self expanding, polyurethane foam tape joint sealant. Size as appropriate for plus and minus 50 percent elongation and compression of joint.
   1. Emseal Joint Systems, Ltd., BACKERSEAL, acrylic impregnated urethane foam.
   2. Tremco, illmod 600.
   3. Master Builders Solutions, a brand of MBCC Group (formerly BASF/Sonneborn): MasterSeal 920/921 Expansion-Joint Filler.

C. Bond Breaker Tape: Polyethylene tape/plastic tape as recommended by sealant manufacturer, as needed to prevent bonding of joint sealant to substrate where backer rod is not practical.

2.10 ACCESSORIES

A. Joint Cleaner: As recommended by joint sealant manufacturer for joint surfaces.

B. Joint Primers: Non-corrosive and non-staining type, as recommended by joint sealant manufacturer, for joint surface conditions encountered.

2.11 COLORS AND FINISHES

A. Colors of Integrally Colored Joint Sealants: As selected by Architect from manufacturer's available colors, including the following:
   1. Joints Separating Materials of Same Color.
   2. Joints Separating Materials of Different Color.
   3. Joint Sealants between Glass and Non-Porous Materials.
   4. Structural Sealant between Glass and Glass and between Glass and Metal.
   5. Joint Sealants between Natural / Unfinished Metals.
   6. Sanded Sealants at Masonry and Concrete Joints.
   7. Colors of Joint Sealants to be painted.

B. Sanded Finish at Concrete and Masonry Joints: Apply sand of color, appearance, and texture matching mortar sand. Completely cover joint sealant.

PART 3 - EXECUTION

3.1 INSTALLATION

A. Conform to ASTM C1193, manufacturer's instructions, and provisions of Contract Documents.

B. Seal interior joints to make watertight and exterior joints to make watertight and weathertight. Refer to requirements of individual Sections. Include:
   1. Perimeters of windows, relights, doors, wall louvers, and other openings in walls.
   2. Joints between dissimilar materials.
   3. Horizontal joints, including exterior paving joints over joint filler.
   4. Joints in sheet metal, flashing, and trim.
   5. Joints in concrete, precast concrete, and cast stone.
   6. Expansion joints and control joints at masonry and concrete.
   7. Moving cracks and joints subject to movement, except where firestopping is required as specified in Section 078400.

3.2 BACKER ROD AND PRECOMPRESSED FOAM JOINT SEALANT INSTALLATION

A. Backer Rod Joint Depth Ratio: Force backer rod into joint to proper depth for sealant as instructed by manufacturer. Where not otherwise instructed, conform to following:
   1. Where more than 3/4 inch wide install backer to within 1/2 inch of surface.
   2. Where less than 1/2 inch wide install backer to within 1/4 inch of surface.
   3. Where less than 1/2 inch deep, apply bond breaker tape to bottom of joints to prevent adhesion of sealant to bottom of joint.

B. Precompressed Foam Joint Sealant: Install behind backer rod and joint sealant at exterior joints. Install in sizes to expand and tightly fit joint.

C. Install backing materials in continuous lengths as long as practicable.
   1. Use suitable tools for installation that will not damage backing material. Do not insert with sharp objects.
   2. Do not puncture backer material.

D. Bond Breaker Tape: Where backer rod cannot be installed behind joint sealant, install bond breaker tape
   1. As necessary to prevent joint sealant from adhering to backing, forming three sided adhesion.
   2. As separator over backing materials subject to bleed-through.

3. As separator over asphalt impregnated joint compound and other conditions, where backer rod is not applicable for sealant conditions.

3.3 JOINT SEALANT INSTALLATION

A. Joint Sealant Width to Depth Ratio - General Sealant: Verify following with manufacturer's instructions.
   1. Joint Sealant Bite: Install between 1/4 inch and 1/2 inch deep, except minimum 1/2 width of joint.
   2. Narrowest Dimension at Joint Sealant Profile: Minimum 1/8 inch thick at center of profile.

B. Joint Width to Depth Ratio - Concrete Traffic Joint Sealant. Conform to sealant manufacturer's instructions.
   1. Install asphaltic joint compound under work of paving.
   2. Install bond breaker tape over joint compound.
   3. Do not install joint sealant less than 3/8 inch deep and no more than 5/8 inch deep.

C. Tool joint sealant to make neat, smooth joints.
   1. Provide concave joint profile according to Figure 8A in ASTM C1193 unless otherwise indicated.
   2. Provide flush joint profile according to Figure 8B in ASTM C1193 where indicated.
   3. Provide recessed joint configuration according to Figure 8C in ASTM C1193 of recess depth and at locations indicated.
      a. Use masking tape to protect surfaces adjacent to recessed tooled joints.

D. Take measures to provide positive contact of joint sealants both sides of joint surface. Seal joints before final coat of finish is applied to adjacent surfaces.

E. Sanded Joints at Exposed Masonry and Concrete:
   1. Apply silicone joint sealant and tool over specified backer.
   2. Before skin-over, apply sand to cover sealant by shaking, tossing, or blowing over surface.
   3. Lightly depress sand, maximum 1/16 inch into sealant surface with tool or finger.
   4. Dust loose particles from surface, after sealant has completely cured.

3.4 SECONDARY WEATHER SEALANT

A. Install in conjunction as a secondary weather seal at window, door, and other wall fenestrations to seal to weather barrier and air barrier system conforming to manufacturer's instructions.

3.5 BEDDING SEALANT AND THRESHOLD SEALANT AT CONCEALED JOINTS

A. Install one or two beads of sealants to make watertight joints at flashing and other metal overlaps.

B. Install two beads under metal thresholds prior to setting in place.

END OF SECTION

SECTION 079219 - ACOUSTICAL JOINT SEALANTS

PART 1 - GENERAL

1.1 SUBMITTALS

A. Product Data: Joint sealant and backer material types, chemical characteristics, performance criteria, limitations, and color availability.

B. Color Samples:
   1. Manufacturer's standard selection: Submit on joint sealer material. Reproductions not accepted.
   2. Custom color samples: Submit additional custom color samples as directed by Architect.

C. Backer Material Samples: Backer rod and precompressed foam joint sealant.

D. Manufacturer's Certification: Written certification, signed by authorized manufacturer's representative. Indicate that acoustical joint sealants have been reviewed by manufacturer and are suitable for intended use and conditions of use.

E. Manufacturer's Instructions: Include installation requirements, limitations, compatible materials, and joint types suitable for each product.

1.2 QUALITY ASSURANCE

A. Installer Qualifications: Company specializing in work of this Section with minimum 5 years continuous documented experience for commercial quality joint sealant work comparable to Project scope.

B. Single Source Responsibility: Provide field-installation of acoustical joint sealers specified by this Section under responsibility of a single installer.

1.3 WARRANTIES

A. Manufacturer: 5 year warranty against failure of materials.

B. Contractor: 2 year labor Warranty of exterior joint sealants against failure, except at horizontal paving.

PART 2 - PRODUCTS

2.1 MANUFACTURERS, GENERAL

A. Substitutions for Manufacturers and Products Specified in this Section: Submit in conformance with provisions specified for substitutions.

2.2 PERFORMANCE REQUIREMENTS

A. Provide acoustical sealants that reduce airborne sound transmission through building partitions and elements, with laboratory testing of assemblies identical to those indicated, according to ASTM E90 for reduction of airborne sound transmission through perimeter joints and openings in building construction at representative assemblies.

2.3 ACOUSTICAL JOINT SEALANTS

A. Acoustical Sealant at Exposed Joints:
   1. Nonsag, paintable, nonstaining, latex sealant conforming to ASTM C834.
      a. Grabber Construction Products: Acoustical Smoke and Sound Sealant GSCSF.
      b. Hilti, Inc.: CP 506 Smoke and Acoustical Sealant.
      c. Pecora Corp.: AC-20 FTR Acoustical & Insulation Sealant.
      d. Specified Technologies, Inc.: Smoke N Sound Acoustical Sealant.
      e. United States Gypsum Co.: SHEETROCK Acoustical Sealant.
   2. Colors: As selected by Architect from manufacturer's full range of non-custom colors.

B. Acoustical Sealant at Concealed Joints:

1. Synthetic Rubber Joint Sealant: Single component, non-skinning, non-hardening, 90 percent solids, acoustical properties conforming to ASTM C919 and ASTM E90.
   a. Pecora Corp.: BA-98
   b. Tremco: Acoustical Sealant.
2. Water Based Siliconized Acrylic Latex:
   a. Pecora: AIS-919
   b. United States Gypsum Co.: SHEETROCK, Acoustical Sealant
   c. Momentive Performance Materials Inc.; GE Silicones: RCS20 Siliconized Acrylic Latex
3. Install 2 beads under steel stud framing channel and wood plates and into 1/2 inch space between top of floor and bottom of gypsum board and plaster systems.

2.4 ACOUSTICAL/FIRESTOP PADS FOR ELECTRICAL BOXES

A. Products: Provide from the following products, or approved substitution. Acoustical pads products include but are not limited to:
   1. 3M Fire Protection Products: MPP+ Moldable Putty Pads.
   2. Hilti Corporation: CP 617 6 inch by 7 inch Putty Pad or CP 617L inch by 7 inch Putty Pad.
   3. Specified Technologies Inc. (STI): SpecSeal Series SSP Putty Pad.

B. Intumescent pads designed to seal around electrical boxes to reduce sound transmission, tested according to ASTM E90, and fire/smoke protection, tested according to ASTM E814, to the extent required to meet ratings for assemblies indicated.

C. Apply pads to electrical boxes in sound-rated assemblies and in sound- and fire-rated assemblies, in accordance with manufacturer's written instructions and Division 26 electrical Sections.

2.5 ACCESSORIES

A. Provide joint backings, bond breaker tape, masking tape, primers, cleaners, and other products for a complete installation.

PART 3 - EXECUTION

3.1 INSTALLATION

A. Examine, prepare, and install according to applicable requirements of Section 079200.
   1. Verify conditions ready to receive work of this Section, conforming to manufacturer's instructions, before beginning.
   2. Prepare substrates, conforming to ASTM C1193 and as instructed by manufacturer.
   3. Conform to ASTM C1193, manufacturer's instructions, and provisions of Contract Documents.

B. Seal according to ASTM C919 and manufacturer's written instructions for completely sealing off joints and other sound-flanking paths around or through assemblies where acoustical performance or acoustical sealants are indicated. Seal partitions to underside of floor slabs above acoustical ceilings.
   1. Install 2 beads under steel stud framing channel and wood plates.
   2. Install and tool into 1/2 inch joint space to completely fill void between wallboard edges and adjacent floor, wall, and ceiling surfaces.

C. Install firestop and acoustical putty pads to comply with manufacturer's written installation instructions unless more stringent requirements apply.

END OF SECTION

SECTION 081113 - STEEL DOORS AND FRAMES

PART 1 - GENERAL

1.1 SUBMITTALS

A. Shop Drawings: Include following.
   1. Door and Frame Schedule: Match reference numbers shown on Drawings.
   2. Door Type Elevations, minimum 3/8 inch per foot scale.
   3. Conditions at Openings: Show floor threshold conditions and clearances required to clear flooring material.
   4. Door hardware: Cut-outs, preparation, locations, reinforcement, clearances, electrical requirements, and other installation requirements.
   5. Anchorage and accessory items.

B. Product Data: Describe configurations, standard details for cut-outs and hardware reinforcement, door reinforcement and construction, factory-applied primer. Include documentation illustrating conformance to provisions of this Section.

C. Manufacturer's Certificates:
   1. Hollow Metal Doors and Frames: Certify that products conform to or exceed provisions of Contract Documents and that manufacturer agrees to replace non-conforming doors and frames at no additional cost to Owner.
   2. Primers: Certify that specified priming procedures, methods, and products are followed, and that primers used are compatible with finish coats that will be field-applied for Project.

D. Certified Test Data: Test data from independent testing agency showing compliance for fire rated assemblies as specified this Section under Regulatory Requirements.

E. Inspector Qualifications: Substantiating compliance with qualifications specified in this Section.

F. Manufacturer's Installation Instructions: Indicate special installation instructions. Transmit one copy of instructions to Installer.

1.2 QUALITY ASSURANCE

A. Manufacturer Qualifications:
   1. Company specializing in manufacture of steel doors and frames.
   2. Able to document minimum 10 years' experience.
   3. Member of Steel Door Institute (SDI) or Hollow Metal Manufacturers Association (HMMA).

B. Inspector Qualifications for Fire-Rated and Egress Doors: Certified according to Door Hardware Institute or other organization acceptable to authorities having jurisdiction (per NFPA and building code).

C. Provide steel doors and frames from single manufacturer.

PART 2 - PRODUCTS

2.1 MANUFACTURERS

A. Manufacturers: Provide products from one of the following, or approved substitution.
   1. Ceco Door Products, ASSA ABLOY
   2. Curries, ASSA ABLOY.
   3. Republic Doors and Frames, an Allegion Brand.
   4. Steelcraft Manufacturing Co, an Allegion Brand.

B. Approved Substitutions: Conform to provisions of Section 012500.

2.2 REGULATORY REQUIREMENTS

A. Testing Agencies: Independent third party agency, approved by building code authority having jurisdiction.

B. Fire Rated Door and Frame Assemblies:
   1. Fire Door Protection Ratings: As indicated.
   2. Side Swinging and Pivoting Doors: Conform to testing requirements of UL 10C or NFPA 252, including exception to hose stream test permitted for 20 minute doors.
   3. Smoke and Draft-Control Assemblies: Conform to testing requirements of UL 1784.
   4. Fire Door Labels:
      a. Fire Door Labels: Conforming to NFPA 80, permanently affixed to door at factory; bearing name of manufacturer, third-party testing agency, fire-protection rating, maximum transmitted temperature endpoint as required, and smoke and draft protection, as required.
      b. Smoke and Draft Control Door Labels: Bearing fire rating label with letter S indicating conformance to UL 1784.
   5. Fire Door Frame Labels: Bearing fire rating label with name of manufacturer and independent inspection agency.

2.3 MATERIALS

A. Concealed Surfaces: Hot-Rolled Steel Sheets and Strips: Commercial Quality carbon steel, pickled and oiled, complying with ASTM A569 and ASTM A568.

B. Exposed Surfaces: Cold-Rolled Steel Sheets: Commercial quality carbon steel, complying with ASTM A366 and ASTM A568.

C. Metallic-Coated Steel Sheet: Commercial quality carbon steel, complying with ASTM A653/A653M, Type B, for galvannealed coating, minimum thickness A60. Use for all exterior hollow metal doors and frames.

D. Anchors and Other Steel Used in Exterior Assemblies: Hot dip galvanized, complying with ASTM A153/A153M.

E. Mineral Fiber Insulation: ASTM C665, Type 1, flame-spread index maximum 25, smoke-developed index maximum 50.

2.4 FASTENERS AND ANCHORS

A. Exposed Fastener Heads: Spanner head. Other tamper-resistant heads, as accepted by Architect/Owner.

B. Wall Anchors: Minimum 14 gauge steel, sufficient for wall attachment, tested to ANSI A 250.4, Level A (one million cycles).

C. Anchors at Existing Concrete and Masonry Openings: Dap frames, install expansion anchors, and body putty flush with frame to make fastener locations invisible.

D. Floor Anchors at Slabs with Flowable Underlayment: Provide adjustable anchors and clips and frame fabrication as needed to allow for underlayment thickness.

E. Other Inserts, Bolts, Supports, and Fasteners: Manufacturer's standard units.

2.5 PROVISION FOR HARDWARE

A. Hardware Reinforcement: Conform to ANSI A115 And ANSI A250.6. Factory reinforce, drill and tap doors and frames to receive mortised hinges, locks, latches, flush bolts, and concealed door closers.

B. Use hardware templates furnished by hardware manufacturer.

C. Hardware Reinforcing: Steel, meet or exceed following:
   1. Hinge Rail and Reinforcement:
      a. Doors: U-channel running full door height, continuously welded to face sheets. Refer to door fabrication specified in this Section.
      b. Frames: 7 gauge, spot welded.

2. Lock Rail and Reinforcement: Refer to door fabrication specified in this Section.
3. Surface Closers:
   a. Doors: 12 gauge by 5-1/4 inch wide U-Channel reinforcement welded to door end channels. Flat reinforcements not accepted.
   b. Frames: 12 gauge plate reinforcements welded to frames according to type of door closer installations.
4. Hold Open Arms: Door reinforcement 12 gauge U-Channel.
5. Panic Devices: Door reinforcing 14 gauge U-Channels at fastening positions.
6. Floor Check Hinges and Pivots: 7 gauge.

D. Door Silencers: Drill door frame stops to receive 3 silencers at each door swing. Insert plastic plugs to keep holes open during painting and construction activities.

E. Plaster Guards: Provide at silencers, strike pockets, and hinge reinforcements.

F. Hardware Locations: Refer to Section 087100.

G. Field Tapping And Drilling: Accepted at surface-applied hardware.

2.6 FABRICATION

A. Exterior Doors: ANSI/SDI A250.8, Level 3 (Extra-Heavy Duty), Model 2 (Flush Seamless Design - Full Height Continuous Seam Weld). Exceeding ANSI A250.4 Acceptance Criteria, Level A (1 million cycles).
   1. Face Sheets: 16 gauge steel.
   2. Core Design:
      a. Fiberglass or mineral wool insulation, 0.75 pound density, minimum 2.5 R-Value (0.40 U-Value).
      b. Kraft paper honeycomb type cores are not acceptable.
   3. Vertical Internal Stiffeners. 20 gauge steel channels, space minimum 6 inches on center, spot weld to skins.
   4. Vertical Edge Seams: Provide doors with continuous vertical mechanical inter-locking joints at lock and hinge edges with visible edge seams, or a one piece full height 14 gauge channel. Apply a continuous bead of structural epoxy in the internal vertical connection.
      a. Welded Vertical Edges: Continuous vertical mechanical interlocking joint; edge seams welded, filled with structural adhesive, and ground smooth.
   5. Top and Bottom Channels: Reinforce top and bottom of doors with 14 gauge steel, welded to both panels.
   6. Vertical Edge Reinforcement: One piece, continuously arc welded full length to face sheets.
      a. Lock Channel: Full height, 14 gauge steel, beveled 1/8 inch in 2 inch.
      b. Hinge Channel: Full height, 12 14 gauge steel extruded to 7 gauge equivalent, formed and tapped for hinges.
   7. Top and Bottom Channels: 16 gauge steel with flush channel filler cap to close top rail opening.
   8. Provide weep holes in bottom of doors to allow moisture to escape.
   9. Provide top rail flush channel filler cap sealed against water penetration.
      a. Snap-in caps are not acceptable.
   10. Minimum U-Value of 0.60.

B. Interior Steel Doors: ANSI/SDI A250.8, Level 3 (Extra-Heavy Duty), Model 2 (Flush Seamless Design - Edge Seam Tack Welded and Filled Smooth). Passing ANSI A250.4 Acceptance Criteria, Level A (1 million cycles).
   1. Face Sheets: 16 gauge steel.
   2. Core Design: Polystyrene foam core or phenolic impregnated honeycomb paper core, adhesive laminated to both face sheets, except honeycomb core not accepted at doors exposed to moisture.
   3. Vertical Edge Seams: Provide doors with continuous vertical mechanical inter-locking joints at lock and hinge edges with visible edge seams, or a one piece full height 14 gauge channel. Apply a continuous bead of structural epoxy in the internal vertical connection.
      a. Welded Vertical Edges: Continuous vertical mechanical interlocking joint; edge seams welded, filled with structural adhesive, and ground smooth.
   4. Top and Bottom Channels: Reinforce top and bottom of doors with 14 gauge steel, welded to both panels.
   5. Vertical Edge Reinforcement: One piece, continuously arc welded full length to face sheets.
      a. Lock Channel: Full height, 14 gauge steel, beveled 1/8 inch in 2 inch.

b. Hinge Channel: Full height 12 gauge steel extruded to 7 gauge equivalent, formed and tapered for hinges.

6. Top and Bottom Channels: 16 gauge steel with flush channel filler cap to close top rail opening.
   a. Snap in caps are not accepted.

C. Vertical Door Edges: Bevel 1/8 inch in 2 inch at both strike and hinge side vertical edges.

D. Steel Frames: Pressed steel frames with 2 inch face, 1/2 inch returns, double rabbet with 5/8 inch stop. Conform to ANSI/SDI A250.8 Level to match door.
   1. Frames at Doors: 14 gauge cold-rolled steel.
   2. Masonry Anchors: Minimum 3/16 inch diameter, non-corrosive coated steel wire, or as accepted by Architect.
   3. Full Profile Welded Construction: Miter and weld corners and other joinery. Continuously weld inside miters and face of frames. Grind faces and finish smooth for seamless joint.
   4. Knock-down frames not acceptable unless otherwise indicated.
   5. Plaster Guards: Weld 16 gauge steel plaster guards or mortar boxes to frame at back of door hardware cutouts where finish materials might obstruct hardware operation.

E. Welded Door Construction: Weld door skins to perimeter channels. Glued channels not acceptable unless fully welded.

F. Hardware Reinforcement: Fabricate and weld into place. Include concealed stiffeners, reinforcement, edge channels, and moldings fabricated from 16 gauge steel.

G. Exposed Joints at Doors and Frames: Arc weld continuously, full length. Grind, dress, and make smooth for flush, seamless appearance at edges and joinery.

H. Provisions for Persons with Disabilities: Fabricate location of jamb stops to accommodate complete closing of door by automatic door closer without exceeding maximum allowable pressure of 5 to 8.5 pounds pull.

2.7 FABRICATION TOLERANCES

A. Clearance between Doors and Frames at Heads and Jambs: 1/8 inch.

B. Clearance between Meeting Edges of Pairs of Doors: 1/8 to 1/4 inch at fire-rated and non-fire-rated doors.

C. Clearance between Door and Stop: 1/16 inch.

D. Clearance between Door and Sill:
   1. At Doors with no Thresholds: Maximum 3/4 inch, except 1/4 inch above carpeting.
   2. At Doors with Thresholds: Maximum 3/8 inch.

2.8 FINISH

A. Thoroughly degrease, clean and chemically treat for maximum adhesion.

B. Exterior Doors and Frames: Compatible with finish paint specified in Section 099000. Apply immediately after cleaning and pretreating.
   1. Galvanizing: ASTM A653/A653M, A60 galvannealed.
      a. Wipe coat galvanized steel (WCGS) (A40) coating systems and ASTM A879 systems are not acceptable.
   2. Shop Primer: ANSI A224.1 factory-applied, baked-on epoxy ester shop primer, or Tnemec Series N69F High Build Epoxoline II.
      a. Color: Light gray.
      b. Not accepted as coating over hot-dipped galvanized.

C. Interior Doors and Frames: Compatible with finish paint specified in Section 099000.
   1. Baked-On Shop Primer: ANSI A224.1.
      a. Doors: Manufacturers standard alkyd base primer.
      b. Frames: factory-applied baked-on epoxy ester. Color: Light gray.

2. Air Dried Shop Primer: As specified in Section 055000 for interior metal, including Tnemec N69F High Build Epoxoline II. Color: Light gray.

2.9 DISSIMILAR METALS

A. Coat or otherwise isolate dissimilar metals and materials as necessary to prevent galvanic action.

PART 3 - EXECUTION

3.1 INSTALLATION

A. Examine, prepare substrates, and install according to manufacturer's written instructions and provisions of Contract Documents

B. Conform to provisions of ANSI A250.11, Contract Documents, and manufacturer's instructions.

C. Steel Frames: Conform to ANSI A250.11, and NFPA 80 for fire rated frames.

D. Set frames accurately in place, plumb, aligned, and securely braced.

E. Install minimum 3 wall anchors at hinge and strike side of each jamb, and not less than one anchor for each 30 inch of frame height.

F. Installing Mineral Fiber Insulation: Pack frames tightly with mineral fiber insulation.

G. Ceiling Struts: Extend struts vertically from top of frame at each jamb to overhead structural supports or substrates above frame unless frame is anchored to masonry or to other structural support at each jamb. Bend top of struts to provide flush contact for securing to supporting construction. Provide adjustable wedged or bolted anchorage to frame jamb members.

H. Install sealant between door frames and wall in accordance with Section 079200.

I. Door Installation: Fit hollow metal doors accurately into frames within clearances specified in ANSI/SDI A250.8. Conform to NFPA 80 for fire-labeled doors and NFPA 105 for smoke control doors.

J. Door Hardware: Install hardware specified in Section 087100. Field tap and drill for installation of surface applied hardware not applicable for factory installation.

3.2 FIELD QUALITY CONTROL

A. Inspection for Fire-Rated and Egress Doors: Inspect according to requirements of authorities having jurisdiction.

END OF SECTION

THIS PAGE INTENTIONALLY LEFT BLANK

SECTION 081416 - FLUSH WOOD DOORS

PART 1 - GENERAL

1.1 SUBMITTALS

A. Shop Drawings: Indicate door openings, elevations, dimensions, types, swings, undercuts, beveling, cutouts, vertical door edge details, wood species, and special blocking for hardware.

B. Product Data:
   1. Published literature by manufacturer. Include description of door core materials and construction.
   2. UV Cured Finishes: Performance characteristics, chemical characteristics, test data, number of coatings, final coating thickness, and steps required for refinishing damaged surfaces.

C. Door Sample: Corner section of each door construction type illustrating door construction. Include edge treatment and vision frames complying with specifications.

D. Color Samples: Manufacturers standard transparent finishes. Submit additional, custom, finishes where requested by Architect.

E. Final Color Samples: Finished face panel material 6 inches square. Illustrate finished edge treatment and approved finish color and gloss level. Submit after initial color approval.

F. Manufacturer's Certificate: Certify that doors meet or exceed specified requirements.

G. Certified Test Data: Test data from independent testing agency showing conformance to fire rated door assemblies as specified this Section under Regulatory Requirements.

H. Manufacturer Instructions: Include installation instructions, special procedures, and protection to finishes required.

I. Templates: Submit one copy for each type of hardware.

1.2 QUALITY ASSURANCE

A. Furnish wood doors from single manufacturer for Work of this Contract.

1.3 WARRANTY

A. Door Manufacturer: Include reinstallation costs due to repair or replacement of defective doors where defect was not apparent prior to hanging.
   1. Interior Doors: Replace doors that have warped, bowed, cupped, twisted, telegraphed core construction in face veneers, or not complied with specified tolerances.
      a. Warranty Period: Life of original installation.

B. Contractor: Replace or refinish doors where determined by Architect that installation has contributed to rejection or to voiding of manufacturer's Warranty.

PART 2 - PRODUCTS

2.1 MANUFACTURERS

A. Manufacturers: Provide products from one of the following, or Architect-approved substitution.
   1. Masonite ASPIRO Series, formerly Marshfield-Algoma.
   2. Oshkosh Door Co.
   3. VT Industries Inc: Artistry Collection.
   4. VT Industries Inc; Eggers: Premium Series.

B. Approved Substitutions: Architect-approved equal products submitted as specified for substitutions.

2.2 REGULATORY REQUIREMENTS

A. Testing Agencies: Independent third party agency, approved by building code authority having jurisdiction.

B. Fire Rated Door Assemblies: As indicated, and as follows:
   1. Fire Door Protection Ratings: As indicated on Drawings.
   2. Side Swinging and Pivoting Doors: Testing to UL 10C or NFPA 252 including exception to hose stream test permitted for 20 minute doors.
   3. Smoke and Draft-Control Assemblies: As tested to UL 1784.

C. Doors in Exit Enclosures and Exit Passageways: Maximum transmitted temperature endpoint for doors and glass of not more than 450 degrees F above ambient at end of 30 minutes of standard fire exposure.

D. Fire Door Labels:
   1. Fire Door Labels: Conforming to NFPA 80, permanently affixed to door at factory; bearing name of manufacturer, third-party testing agency, fire-protection rating, maximum transmitted temperature endpoint as required, and smoke and draft protection, as required.
   2. Smoke and Draft Control Door Labels: Bearing fire rating label with letter S indicating conformance to UL 1784.
   3. Fire Door Frame Labels: Bearing fire rating label with name of manufacturer and independent inspection agency.

E. Maximum Transmitted Temperature Endpoint for Doors and Glass: Not more than 450 degrees F above ambient at end of 30 minutes of standard fire exposure.

F. Glazing at Fire Rated Doors:.
   1. Labeled Fire-Resistive Rated Glazing: Not required when tested to ASTM E119 as part of a fire-resistive-rated wall assembly, as accepted by authorities having jurisdiction.
   2. Glazing in Fire Doors Assemblies: Conform to ratings and products indicated.
   3. Labeling of Fire-Protection Rated Glazing: Showing name of manufacturer, test standard, and fire protection rating; issued by an approved testing agency; permanently affixed.

2.3 PERFORMANCE / DESIGN CRITERIA

A. Sound-Rated Doors: Where indicated.
   1. STC Rating: Minimum STC as indicated on Drawings, and as determined by ASTM E413 when tested in an operable condition according to ASTM E90 and ASTM E1408.

2.4 DOOR CONSTRUCTION

A. Flush Wood Doors: 1-3/4 inch thick, solid core construction (except where hollow core is indicated), 5 or 7 ply cross bands.

B. Standards for Grade and Assembly: WDMA I.S.1A or AWI, Section 9.

C. Performance Duty Level: Extra Heavy Duty.

D. Grade: Custom Grade.

E. Fire Rated Doors: Conform to NFPA 80. Provide 20 minute, 45 minute, 60 minute, and 90-minute doors to meet Code.
   1. Test and label to meet requirements for positive pressure testing using concealed intumescent strip at stiles and top rails.
   2. Doors requiring intumescent strip on door frames to pass positive pressure test are not accepted.

F. Non-Rated and 20 Minute Fire Rated Door Construction: Accepted:
   1. WDMA SCLC-5 or SCLC-7 - Veneer, Structural Composite Lumber Core, Bonded. iLevel, Timberstrand LSL Core.
   2. WDMA PC-5 or PC-7 - Veneer, Particle Board Core, Bonded.

G. Mineral Core Fire Rated Doors Exceeding 20 Minute Rating: WDMA FD-5 or FD-7 - Veneer, Fire Rated Mineral Core, with bonded stiles, rails, face veneer, and core.

H. Hardware Blocking: As required for door hardware locations.

2.5 FLUSH DOOR FACING

A. Hardwood Face Veneer for Transparent Finish: AWI, Section 9.
   1. Veneer Face Thickness: Minimum 1/50th inch after sanding.
   2. Grade: Grade A.
   3. Species: Select White Birch.
   4. Slicing: Plain Sliced.
   5. Matching: Book and Running Matched.
   6. Pair and Set Match: For double doors.
   7. Room Match: For doors in same area.
   8. Edges: Match face veneer.

B. Sketch Face Door Veneers: Locate at doors with full and double lites to simulate stile and rail doors with horizontal rails and vertical stiles.

C. Edge Type: Edge Type - E - Solid Wood Band:
   1. Cover rail with face veneer and expose face veneer at edge.
   2. Ease to create appearance of solid wood.

2.6 ACCESSORIES

A. Glue: WDMA I.S.1A, Type 1, for bonding stiles and rails to core and bonding face veneers to core, to stiles, and to rails.

B. Structural Firestop Mineral Core Board: Georgia-Pacific Corporation, Firestop System. Fiber reinforced diatomaceous earth and binders.

C. Hardware: Specified in Section 087100, to the extent not specified in this Section.

2.7 GLASS AND GLAZING MATERIALS

A. Door Glass: Factory installed 1/4 inch thick safety glass, except fire-rated glass and as otherwise required by code. Conform to provisions of Section 088000.

B. Rated and Non-Rated Metal Vision Frames: Air Louvers, Inc, Woodlite, Low Profile Beveled Vision Lite, or Architect-approved equal.
   1. Wood Veneer: Match transparent wood door face species and color,
   2. Fire Rated Doors: FGS4500 intumescent tape under glass retainer. Positive pressure tested to UL10C.

C. Rated and Non-Rated Doors: ANSI/WDMA I.S. 1-A, Option M4, Metal Vision Frames.

D. Glass Stops - Non-Rated: Wood, ANSI/WDMA I.S. 1-A, Option M2: Recessed Bead Molding, mitered corners.

E. Fire Rated Glass Stops:
   1. 20 Minute: Wood, ANSI/WDMA I.S.1A, Option M3, Lip Molding, mitered corners, UL labeled metal clips system designed for concealed mounting under wood stop. Metal stops not accepted.
   2. 45 Minute and Over: ANSI/WDMA I.S.1-A, Option M4, Metal Vision Frames.
      a. Transparent Finished Doors: Air Louvers, Inc, Woodlite, or Architect-approved equal, wood veneered metal frames matching specified wood species.
      b. Opaque Finished Doors: Prime for paint finish.

2.8 FLUSH WOOD DOOR FABRICATION

A. Fabricate in conformance to WDMA I.S.1A or AWI Section 9 and Appendix.

B. Stiles, Rails, and Hardware Blocking: Securely bond to core and face veneers with Architectural Hot Press, Type I hot melt glue. Before applying face veneer, abrasively plane glued unit smooth, both sides.

C. Vertical Edges at Hardwood Faced Doors:
   1. Hardwood lumber edge matching face veneer species and color. Ease edges.
   2. No visible edge joints, finger joints, exposed crossband, or exposed back veneer accepted.
   3. Square edge at hinge side and beveled edge at strike side.

D. Hardware Blocking (Reinforcement): Provide following WDMA I.S.1A or AWI Section 9, Blocking (Reinforcement) Options:
   1. Structural Composite Core: Not required.
   2. Particle Board Core Doors:
      a. 5 inch top rail HB-1.
      b. 5 inch by 18 inch hardware blocking HB-4 at mortise lock side.
      c. Other as required for hardware installation.
   3. Mineral Board Core Doors:
      a. 5 inch top, middle, and bottom rails HB-1, HB-2, and HB 6.
      b. 5 inch by 18 inch hardware blocking HB-4 at both stiles.
      c. 5 inch by 5 inch hook blocking HB-7.
      d. Other as required by hardware installations.

E. Intumescent Firestop at Stiles and Head: Provide concealed firestop at both stiles under lumber door edge. Exposed firestop at top rail is accepted. Exposed door and door frame mounted intumescent tape not accepted.

F. Structural Firestop Board: Provide at Fire Rated 45, 60, and 90 minute mineral core doors at stiles, rails, and hardware blocking locations for screw attachments, eliminating need for through-bolting.

G. Mill doors to accommodate hollow metal frames specified in Section 081113.

H. Completely sand face of doors before final paint finish.

I. Telegraphing of edges or bleeding through of glue face veneers not acceptable.

2.9 FABRICATION TOLERANCES

A. Bevel labeled and non-labeled doors 1/8 inch in 2 inches at lock side and hinge side edges.

B. Machine for hardware. Seal cut surfaces after fitting and machining.

C. Ease edges of doors and stops to approximately 1/16 inch radius.

D. Cut and fit stops. Install with screws.

E. Clearances Doors:
   1. Door to frame at head and jamb: 1/8 inch.
   2. Door to stop at lock edge: 1/8 inch.
   3. Between meeting edges of pair of doors: 1/8 inch (1/16 inch per leaf).
   4. Door bottom to noncombustible floor without threshold: 3/4 inch maximum.
   5. Door bottom to top of threshold on noncombustible floor: 3/8 inch maximum.
   6. Door bottom to rigid floor tile: 5/8 inch.
   7. Door bottom to decorative floor covering: 1/2 inch.

F. Clearances for Fire-Rated Doors: Install in fire-rated frames in conformance to NFPA 80.

2.10 FINISHES

A. Sealing: Apply one or two coats of a sanding sealer (confirm compatible with field-applied stain) to exposed wood surfaces against moisture intrusion, including:
   1. Exposed faces and vertical edges prior to application of finish systems.
   2. Unfinished top and bottom rails.
   3. Hardware cutouts prior to installation of hardware.

B. Field-Applied Stain Finish: Unfinished doors ready for work of Section 099000.

C. Hardware Finishes: As selected by Architect from manufacturer's standard finishes.

PART 3 - EXECUTION

3.1 INSTALLATION

A. Conform to WDMA I.S.1A or AWI Section 9 and Appendix, manufacturer installation instructions, NFPA 80, and UL or Intertek requirements, and Contract Documents.

B. Verify solid backing as required to secure items to walls, such as wall stops, bumpers, and magnetic hold opens.

C. Doors:
   1. Install doors and accessories, including stops and bumpers, to allow maximum swing.
   2. Install to specified clearances and so that door swing contacts only stop.

3.2 INSTALLATION OF DOOR HARDWARE

A. Hardware Placement: Install in conformance with Section 087100 for location dimensions.

B. Fastening Devices: As needed to secure or anchor hardware and conforming to manufacturer instructions. Self-tapping sheet metal screws are not accepted.

C. Cutting and Fitting: Mortis and cut to accurately fit hardware flush with finish surfaces.

D. Door Closers: Install and adjust to automatically close and latch doors. Through-bolt door closers through wood doors.

E. Thresholds:
   1. Cut and fit to profiles of door jambs.
   2. Miter corners and precision joints.

3.3 FIELD QUALITY CONTROL

A. Hardware Representatives: Inspect and adjust door closers and locksets at completion of work and prior to Owner occupancy.

END OF SECTION

THIS PAGE INTENTIONALLY LEFT BLANK

SECTION 084113 - ALUMINUM-FRAMED ENTRANCES AND STOREFRONTS

PART 1 - GENERAL

1.1 SUBMITTALS

A. Shop drawings including wall elevations, typical unit elevations, details, anchors, sills, hardware provisions, joint connections, flashing, sealants, reinforcements, and glazing. Shop Drawings by storefront manufacturer.

B. Product Data: Manufacturer's product data and specifications. Show conformance to requirements of this Section.

C. Samples for Each Material and Finish:
   1. For Initial Selection: Manufacturer's finish charts showing the full range of finishes available.
   2. For Verification: Prepared on 12-inch-length samples of window profile of same metal thickness and material specified. Include sample sets showing the full range of variations expected.

D. Samples for Verification: Submit samples representative of existing finishes for Architect's verification.

E. Sample Top Door Corner: Illustrating door welds and mechanical fastening system.

F. Test Reports: Provide test reports from AAMA accredited laboratory certifying performance tests.

G. Acoustical Test Reports: Provide test reports from an independent third-party laboratory certifying acoustical performance tests.

H. Qualifications: Manufacturer and Installer.

1.2 QUALITY ASSURANCE

A. Manufacturer Qualifications: Company specializing in work of this Section with minimum 10 years documented experience manufacturing commercial quality work of this Section of comparable scope and quality.

B. Installer Qualifications:
   1. Company specializing in work of this Section, able to document 5 years successful commercial quality installation experience.
   2. Certified by manufacturer as qualified for installations specified by this Section.

C. Inspector Qualifications for Egress Doors: Certified according to Door Hardware Institute or other organization acceptable to authorities having jurisdiction (per NFPA and building code).

1.3 WARRANTY

A. Manufacturer: Standard 5 year, non-prorated, full replacement value, full system labor and materials Warranty. Include glass, coatings, and hardware. No pass-through manufacturer Warranties accepted.

B. Insulating Glass: Provide 10 year Warranty against failure of hermetic seal other than through glass breakage in accordance with provisions of Section 088000.

C. Aluminum Entrance Doors: Manufacturer's minimum 5 year labor and materials Warranty against racking and other damaged under normal conditions of use.

D. Manufacturers standard Warranty for hardware items specified under Section 087100.

E. Manufacturer's Anodized Finish Warranty: Standard 2 year warranty against excessive fading or excessive non-uniformity of color, and against cracking, peeling, pitting, or corrosion.

F. Installer Warranty: Five years, against defects in workmanship. Warranty certifies that manufacturer's warranty requirements have been followed.

PART 2 - PRODUCTS

2.1 ALUMINUM-FRAMED ENTRANCES ANDSTOREFRONT SYSTEMS

A. Single Source Responsibility: Provide system and components specified in this Section under a single manufacturer's responsibility, for a complete and watertight system that complies with system warranty requirements.

B. System Description:
1. Nominal 2 inch 4-1/2 inch aluminum tubular aluminum sections with supplementary internal support framing as necessary to meet engineering loads.
2. Interior fabricated to weep moisture out at bottom of system.
3. Related flashings, anchors, and attachment devices.

C. Products: Provide one of the following, or approved substitution.
1. EFCO, a brand of Apogee Industries, Inc. Series 402 for interior.
2. Kawneer, an Arconic Company 451 for interior.
3. Oldcastle Glass Building Envelope non-thermal for interior.

D. Approved Substitutions: Architect-approved equal products submitted as specified for substitutions.

2.2 REGULATORY REQUIREMENTS

A. Safety Glazing: Specified in Section 088000.

B. Accessibility Requirements: Conform to ADA, ANSI A117.1, and requirements of authorities having jurisdiction.

C. Solar Heat Gain Coefficients and U-Factors: Conform to energy code and requirements of Contract Documents.

D. Framing Load Combinations Considerations: Include applicable seismic and wind loads, as specified by Structural General Notes.
1. Do not exceed L/175 of glass edge length and 3/4 inch, whichever is less, when subjected to larger of positive and negative load combinations.

2.3 PERFORMANCE / DESIGN CRITERIA

A. Entrance Doors:
1. Resistance to Racking - Dual Movement Load Test: Conform to following test.
2. Test Unit: Standard top door corner assembly, consisting of 24 inch long side rail section and 12 inch long top rail section.
3. Top Rail: Anchor positively to test bench with 3 inch protrusion beyond edge.
4. Lever Arm: Anchor positively to side rail at point 9 inches form inside edge of top rail.
5. Weight Support Pad: Attach at point 19 inches from inside edge of side rail.
6. Test Weight: At least 270 pounds suspended from weight support pad before reaching point of failure, considered as rotation of lever arm in excess of 45 degrees.

B. Acoustical Attenuation through Exterior Wall and Opening Systems: Sound Transmission Class (STC) not less than ratings indicated on Drawings, when tested according to ASTM E90 and classified according to ASTM E1332 for Outdoor-Indoor Transmission Class (OITC).

2.4 FRAMING MATERIALS

A. Extruded Aluminum: 6063-T5 or 6063-T6 alloy, tempered as required for installation.

B. Aluminum Sheet and Plate: ASTM B209, 5005-H16 alloy and temper.

2.5 COMPONENTS

A. Head Receptor with Reinforcement Clip - As recommended by manufacturer: Aluminum compensation channel, designed to minimize head deflection and drain water to exterior of system. Make provision for watertight joint sealant and backer rod installation. Provide from storefront manufacturer.

2.6 ANCHORS AND FASTENERS

A. Anchors: Aluminum or steel perimeter and floor anchors. Isolate steel anchors from aluminum to prevent galvanic action.

B. Fasteners: Aluminum, stainless steel, or zinc plated steel, coated where exposed to match finish.

2.7 HARDWARE

A. Provide hardware under the Work of this Section to the extent not specified in Section 087100.
   1. Threshold: Extruded Aluminum with ribbed surface.
   2. Sill Sweeps: Brush strip (exposed, concealed).
   3. Pivoting/Hinging: (Center, offset pivot; butt, continuous.)
   4. Closers: (Overhead, surface.)
   5. Latches/Strike: (Dead-latch combination, two-point.)
   6. Latch Handle: (Lever, eurostyle/ w/return, paddle.)
   7. Electric Release: (Offset strike, center hung strike.)
   8. Locks/Strike: (Maximum security hooklock, deadbolt.)
   9. Auxiliary Locks: (Two-point, three-point, flushbolts.)
   10. Cylinders: (Mortise, rim, dummy, thumbturn.)
   11. Panic Devices: (Cross, touch bar, flush mid panel.)
   12. Push/Pulls: (Standard, offset radius, straight radius.)
   13. Cylinder Guard: (Security ring/retainer ring.)
   14. Exit Indicator: (Message panel.)

B. Finish Hardware: As specified in Section 087100.

2.8 GLASS AND GLAZING MATERIALS

A. Glass and Glazing: As specified in Section 088000.

B. Tempered Safety Glass: As specified in Section 088000.

C. Glazing: Dry glazed with interior and exterior preset EPDM or silicone gaskets, setting blocks, and shims as specified by Section 088000, and as suitable for installation.

2.9 FABRICATION

A. Fit and assemble work in manufacturer's shop.
   1. Cut and fit framing members under shop conditions and tolerances.
   2. Completely assemble, mark, and disassemble work that cannot be permanently shop assembled before shipment to assembly in field.

B. Aluminum Wall Thickness:
   1. Extruded Aluminum Vertical and Horizontal Frame Members: Nominal 0.125 and minimum 0.94 inch wall thickness, meeting or exceeding design load criteria.
   2. Extruded or Formed Aluminum Trim Components: Minimum 0.60 thick.
   3. Extruded Door and Door Framing Members: Minimum 0.188 inch (3/16 inch).
   4. Door and Door Framing Sheet and Plate: Minimum 0.90 inch.
   5. Glazing Stops and Similar Components: Minimum 0.050 inch.

C. Mechanically fasten framing members by means of extruded aluminum shear blocks or screw splines attached to vertical mullions.

D. Cut and fit stick members under shop conditions and tolerances.

E. Joints and Corners:
   1. Accurately fit and secure joints and corners flush, hairline and weatherproof.
   2. Fasten with mechanical clip fasteners.
   3. Weld with deep penetration and fillet welds.

F. Welding: Conform to American Welding Society (AWS) and provisions of Section 050560.

G. Internal Reinforcements: Heavy concealed brackets and plates. Provide at hardware locations and structural connections. Secure with deep penetration screws and deep fillet welds.

H. Fasteners: Aluminum or stainless steel. Conceal fasteners where possible.

I. Aluminum Entrance Doors:
   1. Pressure glazed, stile and rail, tubular aluminum construction.
   2. Medium Stile Door Dimensions:
      a. Door Thickness: 1-3/4 inch deep.
      b. Vertical Stile Width: 3-1/2 inch.
      c. Top Rail Width: 3-5/8 inch.
      d. Bottom Rail Width: 10-1/2 inch and as required to accommodate barrier free door operators.
      e. Door Height: Variable with, and as shown on Drawings.
      f. Door Width: As shown on Drawings.
   3. Hardware: Factory cut, drill, and prepare for hardware in accordance to Section 087100 using manufacturer's templates and instructions.
   4. Adjusting Mechanism: Locate at top rail as necessary to make minor clearance adjustments.
   5. Barrier Free Design: Make provision for automatic door openers and pull not exceeding 5 to 8 pound resistance.

2.10 ACCESSORIES

A. Joint Sealant, Backer Rod, and Pre-Compressed Foam Backer: Field Installed, as specified in Section 079200.
   1. Exterior Perimeter and Wall Substrate: Silicone sealant.
   2. Interior Perimeter and Wall Substrate: Polyurethane or latex sealant.

B. Joint Sealants at Factory Installed Storefront Internal Components: As instructed by manufacturer.

2.11 FINISHES

A. Exposed Aluminum: AAMA 611, Anodized Finish, Class I (0.7 mils thickness), Clear.

B. Unfinished exposed metal not accepted. Touch up uncoated metal for smooth, finished appearance matching color and gloss level of adjacent finish.

C. Joint Sealant Color:.
   1. Glass to Aluminum: Black.
   2. Aluminum Perimeter: Match wall color.

D. Hardware Finish: As specified in Section 087100.

PART 3 - EXECUTION

3.1 INSTALLATION

A. Conform to manufacturer's instructions and provisions of Contract Documents.

B. Set units plumb, level and true to line without warp or rack of frames.

C. Anchor frames solidly to surrounding construction to prevent distortion or misalignment with continuous shims.

D. Provide protective coating to separate aluminum from incompatible materials.

E. Protect finished surfaces as necessary to prevent damage during progress of the work.

F. Seal frames to surrounding construction in accordance with Section 079200 for non-acoustical, and 079219 for acoustical joints, except allowing weeps at subframe or sill pan flashing as recommended by manufacturer. Remove excess materials as work proceeds to leave exposed surfaces and joints clean and smooth.

G. Install door frames into aluminum storefront.

3.2 FIELD QUALITY CONTROL

A. Inspection for Egress Doors: Inspect according to requirements of authorities having jurisdiction.

END OF SECTION

THIS PAGE INTENTIONALLY LEFT BLANK

SECTION 085313 - VINYL WINDOWS

PART 1 - GENERAL

1.1 SUBMITTALS

A. Shop Drawings: Include following:
   1. Dimensioned drawings showing location of window openings, elevations, section details of window components, clearances, and relationship to adjacent construction.
   2. Anchorage, hardware, operators, and components not included in manufacturer's standard data.
   3. Glazing details and standards for factory glazed units.

B. Product Data: Manufacturers published descriptive product and technical data indicating materials, appearance, and performance criteria.

C. Samples:
   1. Sample of window illustrating glazing system, materials, and fabrication.
   2. Color Samples: 1 inch by 3 inch showing available finishes.
   3. Insulated Glass Unit: Illustrate color and construction.

D. Compliance Certification:
   1. AAMA Notice of Product Certification: Indicate that windows conform to AAMA/WDMA/CSA/101/I.S.2/A440
   2. Insulating Glass Certification: Test data conforming to IGCC for rating level on dual-sealed double insulating glass units.

E. Manufacturer's Instructions: Include installation requirements, rough-in dimensions, special procedures, and perimeter conditions requiring special attention.

F. Window Sash for Windows: For sash types that require replacement of broken glass with new sash with factory installed IG units, supply 2 window sashes matching each window sash size and type.

1.2 QUALITY ASSURANCE

A. Manufacturer Qualifications:
   1. Company specializing in work of this Section with minimum 10 years documented experience in commercial quality work of comparable scope.
   2. Manufacturing insulating glass windows products certified as meeting or exceeding AAMA/WDMA/CSA 101/I.S.2/A440 specifications standards.
   3. NFRC certified and labeled by independent agency, licensed by NFRC, indicating U-Factor, Solar Heat Gain Coefficient, Visible Transmittance, and Condensation Resistance.
   4. Employ manufacturer's technical representative to attend mockup installations, preconstruction testing, and oversee and verify installations as conforming to manufacturer instructions.

B. Installer:
   1. Trained and authorized by manufacturer as qualified to perform work of this Section.
   2. Able to document 5 years' experience in successful window installation of similar type and quality.

C. Mockup: Provide Mockups: Install in accordance with Division 01 requirements for mockups, and the following:
   1. Locate complete window systems at site wall mockup as directed by Architect.
   2. Provide minimum mockups as required to illustrate window system.
   3. Include system components including flashings, sealants, and means to direct water to building exterior.
   4. Verify mockup as conforming to manufacturer's instructions and provisions of Contract Documents. Make adjustments as needed for watertight system.
   5. Do not begin work of this Section until inspection by manufacturer's representative is complete and system is acceptance by Architect.
   6. Protect and maintain accepted mockup as standard of quality for work of this Section.
   7. Incorporate accepted mockup into work of this Section.

D. Preconstruction Testing: Perform on Mockup prior to acceptance.
   1. Perform testing by accredited AAMA testing agency employed by Owner.
   2. Water Penetration Resistance Test: Conform to AAMA 502 at static test pressure equal to full tested and rated test pressure indicated by product designation in AAMA/WDAM/CSA 101/I.S.2/A440, as evaluated and tested to ASTM E1105, Procedure A.
   3. Air Infiltration Test: Conform to AAMA 502 at 75 Pa (1.6 psf) as evaluated and tested to ASTM E783 testing procedures. Include 10-15 percent testing in manufacturing plant of completed order.

1.3 WARRANTY

A. Window Manufacturer: 10 year Warranty against product defects other than normal wear and tear.

B. Sealed Insulating Glass Manufacturer: 20 year Warranty against failure of air seal from date of manufacture as marked in spacer between glass panels.

C. Color Finish: 5 year Warranty against color fading.

PART 2 - PRODUCTS

2.1 REGULATORY REQUIREMENTS

A. Egress Windows: Comply with IBC requirements for egress windows in sleeping rooms.

2.2 PERFORMANCE REQUIREMENTS

A. Exterior Windows Energy Performance: Comply with COMcheck requirements on Drawings.

2.3 VINYL WINDOWS

A. Products: Window products include but are not limited to:
   1. AMSCO Windows
   2. Andersen Corp.
   3. Cascade Windows
   4. Coeur D'Alene Windows
   5. Milgard Manufacturing, LLC
   6. Summit Windows & Doors

B. Window Types: As indicated on Drawings.

C. Sizes: As indicated on Drawings.

2.4 HARDWARE

A. Exposed Fasteners: Stainless steel.

B. Casement Operating System: Manufacturer's standard stainless steel hinges and multi-point locking system.

C. Operator Gear Type and Material: Rotary, die cast zinc.

D. Hinge Type and Material: Hinged, 300 series stainless steel with heavy gauge arms.

E. Operator Handle Type and Material: Folding, polycarbonate with integral color.

F. Operation Controls (Handles, etc.): Within 12 inches of window bottom.

G. Sash Lock Type and Material: Single actuations, galvanized steel and engineered polymer components.

H. Hardware Type and Material: Self-latching, polycarbonate with integral color.

I. Balance Type and Material: Spring loaded block and tackle, galvanized steel.

J. Rollers and Guides Type and Material: Dual adjustable, brass with extruded glide track.

K. Window Opening Control Device: Provide device to restrict operable sash to less than 4 inches maximum clear opening and releasable, in compliance with ASTM F2090.

2.5 GRILLES

A. Type and Designation: Factory installed sculpted profile between-glass grilles.

B. Pattern: As shown in Drawings.

C. Exterior and Interior Colors: Match windows.

2.6 INSECT SCREENS

A. Frame Material: Aluminum.

B. Frame Color: Match window frame.

C. Insect Screen Material: Fiberglass cloth or TruScene stainless steel wire secured with vinyl spline.

2.7 WEATHERSTRIPPING:

A. Casement Weatherstripping: Conforming to AAMA 701/702.

B. Weatherstrip Type and Material: Three fins and pile, polypropylene.

C. Weatherstrip Type and Material: Flexible tubular and leaf, vinyl.

D. Weather-Strip:
   1. Sash Perimeter: Continuous, double fin, silicone gasket.
   2. Frame Perimeter at Sash Opening: Continuous, double fin, silicone gasket.

E. Install in ports and secured to prevent movement, shrinkage, or loss when removing sash for cleaning and repair.

F. Surface Adhered Weather-Stripping: Not accepted.

2.8 GLASS AND GLAZING

A. Factory Installed Insulating Glass (IG) Units: As specified in Section 088000 and as follows:
   1. Sound Transmission Class (STC)/Outdoor-Indoor Transmission Classification (OITC), ASTM E90: 26/22.

2.9 ASSEMBLY

A. Factory-assemble frames and sash with mitered and mechanically joined corners. Make abutting surfaces tight, hairline, flush, aligned, neat, and weathertight.

B. Seal mitered seams and joints to prevent air and moisture penetration using sealants conforming to AAMA 800.

C. Reinforce frames and sash for attachments of hardware including operating and locking mechanisms.

D. Factory glaze insulating glass units in sash using glazing stops to allow reglazing from interior side of sash without dismantling. Include continuous sealant heel bead at glass to frame.

E. Weep System: Design to drain and prevent blow-back of moisture into window frame cavity.

2.10 ACCESSORIES

A. Installation Accessories: Installation brackets, sash retainer plates, and as necessary for installation.

B. Nail Fin Clips or Flanges: Minimum 1-3/8 inch wide with pre-punched nail holes at perimeter of window frame. Suitable for integration with fluid-applied air barrier and transition membranes.

C. Perimeter Joint Sealant and Backer: Conform to provisions of 079200.

2.11 FINISHES

A. Window Sash and Frame Interior and Exterior Colors: White or as selected by Architect from manufacturer's standard colors available with no cost increase.

B. Hardware: As accepted by Architect from manufacturer's standard selection.

C. Perimeter Joint Sealer Color: As accepted by Architect, approximately matching window color.

PART 3 - EXECUTION

3.1 INSTALLATION

A. Conform to manufacturer's instructions, AAMA recommendations, and provisions of Contract Documents.

B. Install windows to achieve weathertight and freely operating installation.

C. Maintain alignment with adjacent work. Secure assembly to framed openings making plumb and square.

D. Place insulation in shim spaces around unit perimeter, to maintain continuity of building thermal barrier.

E. Set nail fins in continuous sealant to make weathertight assembly and integrate with weather barrier assembly. Miter and seal corners.

F. Install sealant and related backing materials at perimeter of assembly in accordance with Section 079200.

G. Leave installed window units closed and locked.

3.2 FIELD QUALITY CONTROL

A. Manufacturer's Technical Representative:
   1. Conduct technical training and make initial, interim, and final investigations to verify conformance to manufacturer instructions.
   2. Attend mockups and field quality control testing.

B. Field Quality Control Testing Service: AAMA accredited testing agency or building enclosure consultant employed by Owner.

C. Perform in-place testing of three window installations at locations as selected by Architect. Perform tests at 5 percent, 25 percent, and 80 percent completion. Verify conformance to performance requirements specified by this Section.
   1. Water Penetration Resistance Test: Conform to AAMA 502 at static test pressure equal at AAMA default 2/3 static tested and rated performance test pressure indicated by product designation in AAMA/WDAM/CSA 101/I.S.2/A440, as evaluated and tested to ASTM E1105, Procedure A.
   2. Air Infiltration Test: Conform to AAMA 502 at 75 Pa (1.6 psf) as evaluated and tested to ASTM E783 testing procedures.

D. Where initial test results do not conform to performance requirements:
   1. Test additional window installations.
   2. Make corrections to failed installations.
   3. Retest to verify conformance to performance requirements.

END OF SECTION

SECTION 087100 - DOOR HARDWARE

PART 1 - GENERAL

1.1 SUMMARY

A. Section includes:
1. Mechanical and electrified door hardware
2. Electronic access control system components

B. Section excludes:
1. Windows
2. Cabinets (casework), including locks in cabinets
3. Signage
4. Toilet accessories
5. Overhead doors

C. Related Sections:
1. Division 01 "General Requirements" sections for Allowances, Alternates, Owner Furnished Contractor Installed, Project Management and Coordination.
2. Division 06 Section "Rough Carpentry"
3. Division 06 Section "Finish Carpentry"
4. Division 07 Section "Joint Sealants" for sealant requirements applicable to threshold installation specified in this section.
5. Division 08 Sections:
   a. "Steel Doors and Frames"
   b. "Flush Wood Doors"
   c. "Sound Control Door Assemblies"
   d. "Aluminum-Framed Entrances and Storefronts"
6. Division 26 "Electrical" sections for connections to electrical power system and for low-voltage wiring.
7. Division 28 "Electronic Safety and Security" sections for coordination with other components of electronic access control system and fire alarm system.

1.2 REFERENCES

A. Edition Dates: Current edition at Bid Date, with applicable appendices and supplements if any, unless otherwise indicated or adopted by authorities having jurisdiction.

B. UL LLC
1. UL 10B - Fire Test of Door Assemblies
2. UL 10C - Positive Pressure Test of Fire Door Assemblies
3. UL 1784 - Air Leakage Tests of Door Assemblies
4. UL 305 - Panic Hardware

C. DHI - Door and Hardware Institute
1. Sequence and Format for the Hardware Schedule
2. Recommended Locations for Builders Hardware
3. Keying Systems and Nomenclature
4. Installation Guide for Doors and Hardware

D. NFPA - National Fire Protection Association
1. NFPA 70 - National Electric Code
2. NFPA 80 - Standard for Fire Doors and Other Opening Protectives
3. NFPA 101 - Life Safety Code
4. NFPA 105 - Smoke and Draft Control Door Assemblies
5. NFPA 252 - Fire Tests of Door Assemblies

E. ANSI - American National Standards Institute
1. ANSI A117.1 - Accessible and Usable Buildings and Facilities

2. ANSI/BHMA A156.1 - A156.29, and ANSI/BHMA A156.31 - Standards for Hardware and Specialties
3. ANSI/BHMA A156.28 - Recommended Practices for Keying Systems
4. ANSI/WDMA I.S. 1A - Interior Architectural Wood Flush Doors
5. ANSI/SDI A250.8 - Standard Steel Doors and Frames

1.3 SUBMITTALS

A. General:
1. Submit in accordance with Conditions of Contract and Division 01 Submittal Procedures.
2. Prior to forwarding submittal:
   a. Review drawings and Sections from related trades to verify compatibility with specified hardware.
   b. Highlight, encircle, or otherwise specifically identify on submittals: deviations from Contract Documents, issues of incompatibility or other issues which may detrimentally affect the Work.

B. Action Submittals:
1. Product Data: Submit technical product data for each item of door hardware, installation instructions, maintenance of operating parts and finish, and other information necessary to show compliance with requirements.
2. Riser and Wiring Diagrams: After final approval of hardware schedule, submit details of electrified door hardware, indicating:
   a. Wiring Diagrams: For power, signal, and control wiring and including:
      1) Details of interface of electrified door hardware and building safety and security systems.
      2) Schematic diagram of systems that interface with electrified door hardware.
      3) Point-to-point wiring.
      4) Risers.
3. Samples for Verification: If requested by Architect, submit production sample of requested door hardware unit in finish indicated and tagged with full description for coordination with schedule.
   a. Samples will be returned to supplier. Units that are acceptable to Architect may, after final check of operations, be incorporated into Work, within limitations of key coordination requirements.
4. Door Hardware Schedule:
   a. Submit concurrent with submissions of Product Data, Samples, and Shop Drawings. Coordinate submission of door hardware schedule with scheduling requirements of other work to facilitate fabrication of other work critical in Project construction schedule.
   b. Submit under direct supervision of a Door Hardware Institute (DHI) certified Architectural Hardware Consultant (AHC) or Door Hardware Consultant (DHC) with hardware sets in vertical format as illustrated by Sequence of Format for the Hardware Schedule published by DHI.
   c. Indicate complete designations of each item required for each opening, include:
      1) Door Index: door number, heading number, and Architect's hardware set number.
      2) Quantity, type, style, function, size, and finish of each hardware item.
      3) Name and manufacturer of each item.
      4) Fastenings and other pertinent information.
      5) Location of each hardware set cross-referenced to indications on Drawings.
      6) Explanation of all abbreviations, symbols, and codes contained in schedule.
      7) Mounting locations for hardware.
      8) Door and frame sizes and materials.
      9) Degree of door swing and handing.
      10) Operational Description of openings with electrified hardware covering egress, ingress (access), and fire/smoke alarm connections.
5. Key Schedule:
   a. After Keying Conference, provide keying schedule that includes levels of keying, explanations of key system's function, key symbols used, and door numbers controlled.
   b. Use ANSI/BHMA A156.28 "Recommended Practices for Keying Systems" as guideline for nomenclature, definitions, and approach for selecting optimal keying system.
   c. Provide 3 copies of keying schedule for review prepared and detailed in accordance with referenced DHI publication. Include schematic keying diagram and index each key to unique door designations.

d. Index keying schedule by door number, keyset, hardware heading number, cross keying instructions, and special key stamping instructions.
e. Provide one complete bitting list of key cuts and one key system schematic illustrating system usage and expansion. Forward bitting list, key cuts and key system schematic directly to Owner, by means as directed by Owner.
f. Prepare key schedule by or under supervision of supplier, detailing Owner's final keying instructions for locks.

C. Informational Submittals:
1. Provide Qualification Data for Supplier, Installer and Architectural Hardware Consultant.
2. Provide Product Data:
a. Certify that door hardware approved for use on types and sizes of labeled fire-rated doors complies with listed fire-rated door assemblies.
b. Include warranties for specified door hardware.

D. Closeout Submittals:
1. Operations and Maintenance Data: Provide in accordance with Division 01 and include:
a. Complete information on care, maintenance, and adjustment; data on repair and replacement parts, and information on preservation of finishes.
b. Catalog pages for each product.
c. Final approved hardware schedule edited to reflect conditions as installed.
d. Final keying schedule
e. Copy of warranties including appropriate reference numbers for manufacturers to identify project.
f. As-installed wiring diagrams for each opening connected to power, both low voltage and 110 volts.

E. Inspection and Testing:
1. Submit written reports to the Owner and Authority Having Jurisdiction (AHJ) of the results of functional testing and inspection for:
a. Fire door assemblies, in compliance with NFPA 80.
b. Required egress door assemblies, in compliance with NFPA 101.

1.4 QUALITY ASSURANCE

A. Qualifications and Responsibilities:
1. Supplier: Recognized architectural hardware supplier with a minimum of 5 years documented experience supplying both mechanical and electromechanical door hardware similar in quantity, type, and quality to that indicated for this Project. Supplier to be recognized as a factory direct distributor by the manufacturer of the primary materials with a warehousing facility in the Project's vicinity. Supplier to have on staff, a certified Architectural Hardware Consultant (AHC) or Door Hardware Consultant (DHC) available to Owner, Architect, and Contractor, at reasonable times during the Work for consultation.
2. Installer: Qualified tradesperson skilled in the application of commercial grade hardware with experience installing door hardware similar in quantity, type, and quality as indicated for this Project.
3. Architectural Hardware Consultant: Person who is experienced in providing consulting services for door hardware installations that are comparable in material, design, and extent to that indicated for this Project and meets these requirements:
a. For door hardware: DHI certified AHC or DHC.
b. Can provide installation and technical data to Architect and other related subcontractors.
c. Can inspect and verify components are in working order upon completion of installation.
d. Capable of producing wiring diagram and coordinating installation of electrified hardware with Architect and electrical engineers.
4. Single Source Responsibility: Obtain each type of door hardware from single manufacturer.

B. Certifications:
1. Fire-Rated Door Openings:

a. Provide door hardware for fire-rated openings that complies with NFPA 80 and requirements of authorities having jurisdiction.
b. Provide only items of door hardware that are listed products tested by UL LLC, Intertek Testing Services, or other testing and inspecting organizations acceptable to authorities having jurisdiction for use on types and sizes of doors indicated, based on testing at positive pressure and according to NFPA 252 or UL 10C and in compliance with requirements of fire-rated door and door frame labels.

2. Smoke and Draft Control Door Assemblies:
   a. Provide door hardware that meets requirements of assemblies tested according to UL 1784 and installed in compliance with NFPA 105
   b. Comply with the maximum air leakage of 0.3 cfm/sq. ft. (3 cu. m per minute/sq. m) at tested pressure differential of 0.3-inch wg (75 Pa) of water.
3. Electrified Door Hardware
   a. Listed and labeled as defined in NFPA 70, Article 100, by testing agency acceptable to authorities having jurisdiction.
4. Accessibility Requirements:
   a. Comply with governing accessibility regulations cited in "REFERENCES" article 087100, 1.02.D3 herein for door hardware on doors in an accessible route. This project must comply with all Federal Americans with Disability Act regulations and all Local Accessibility Regulations.

C. Pre-Installation Meetings
1. Keying Conference
   a. Incorporate keying conference decisions into final keying schedule after reviewing door hardware keying system including:
      1) Function of building, flow of traffic, purpose of each area, degree of security required, and plans for future expansion.
      2) Preliminary key system schematic diagram.
      3) Requirements for key control system.
      4) Requirements for access control.
      5) Address for delivery of keys.
2. Pre-installation Conference
   a. Review and finalize construction schedule and verify availability of materials, Installer's personnel, equipment, and facilities needed to make progress and avoid delays.
   b. Inspect and discuss preparatory work performed by other trades.
   c. Inspect and discuss electrical roughing-in for electrified door hardware.
   d. Review sequence of operation for each type of electrified door hardware.
   e. Review required testing, inspecting, and certifying procedures.
   f. Review questions or concerns related to proper installation and adjustment of door hardware.
3. Electrified Hardware Coordination Conference:
   a. Prior to ordering electrified hardware, schedule and hold meeting to coordinate door hardware with security, electrical, doors and frames, and other related suppliers.

1.5 DELIVERY, STORAGE, AND HANDLING

A. Inventory door hardware on receipt and provide secure lock-up for hardware delivered to Project site. Promptly replace products damaged during shipping.

B. Tag each item or package separately with identification coordinated with final door hardware schedule, and include installation instructions, templates, and necessary fasteners with each item or package. Deliver each article of hardware in manufacturer's original packaging.

C. Maintain manufacturer-recommended environmental conditions throughout storage and installation periods.

D. Provide secure lock-up for door hardware delivered to Project. Control handling and installation of hardware items so that completion of Work will not be delayed by hardware losses both before and after installation.

E. Handle hardware in manner to avoid damage, marring, or scratching. Correct, replace or repair products damaged during Work. Protect products against malfunction due to paint, solvent, cleanser, or any chemical agent.

F. Deliver keys to manufacturer of key control system for subsequent delivery to Owner.

1.6 COORDINATION

A. Coordinate layout and installation of floor-recessed door hardware with floor construction. Cast anchoring inserts into concrete.

B. Installation Templates: Distribute for doors, frames, and other work specified to be factory or shop prepared. Check Shop Drawings of other work to confirm that adequate provisions are made for locating and installing door hardware to comply with indicated requirements.

C. Security: Coordinate installation of door hardware, keying, and access control with Owner's security consultant.

D. Electrical System Roughing-In: Coordinate layout and installation of electrified door hardware with connections to power supplies and building safety and security systems.

1.7 WARRANTY

A. Manufacturer's standard form in which manufacturer agrees to repair or replace components of door hardware that fail in materials or workmanship within published warranty period.
   1. Warranty does not cover damage or faulty operation due to improper installation, improper use or abuse.
   2. Warranty Period: Beginning from date of Substantial Completion, for durations indicated in manufacturer's published listings.
      a. Mechanical Warranty
         1) Locks
            a) Schlage L Series: 10 years
            b) Schlage ND Series: 10 years
            c) Falcon: 10 years
         2) Exit Devices
            d) Von Duprin: 10 years
         3) Closers
            e) Falcon SC Series: 10 years
         4) Automatic Operators
            f) LCN: 2 years
      b. Electrical Warranty
         1) Exit Devices
            g) Von Duprin: 3 years

1.8 MAINTENANCE

A. Furnish complete set of special tools required for maintenance and adjustment of hardware, including changing of cylinders.

B. Turn over unused materials to Owner for maintenance purposes.

PART 2 - PRODUCTS

2.1 MANUFACTURERS

A. The Owner requires use of certain products for their unique characteristics and project suitability to ensure continuity of existing and future performance and maintenance standards. After investigating available product offerings, the Awarding Authority has elected to prepare proprietary specifications. These products are specified with the notation: "No Substitute."

1. Where "No Substitute" is noted, submittals and substitution requests for other products will not be considered.

B. Approval of alternate manufacturers and/or products other than those listed as "Scheduled Manufacturer" or "Acceptable Manufacturers" in the individual article for the product category are only to be considered by official substitution request in accordance with section 012500.

C. Approval of products from manufacturers indicated in "Acceptable Manufacturers" is contingent upon those products providing all functions and features and meeting all requirements of scheduled manufacturer's product.

D. Where specified hardware is not adaptable to finished shape or size of members requiring hardware, furnish suitable types having same operation and quality as type specified, subject to Architect's approval.

2.2 MATERIALS

A. Fabrication
1. Provide door hardware manufactured to comply with published templates generally prepared for machine, wood, and sheet metal screws. provide screws according to manufacturer's recognized installation standards for application intended.
2. Finish exposed screws to match hardware finish, or, if exposed in surfaces of other work, to match finish of this other work including prepared for paint surfaces to receive painted finish.
3. Provide concealed fasteners wherever possible for hardware units exposed when door is closed. Coordinate with "Metal Doors and Frames", "Flush Wood Doors", "Stile and Rail Wood Doors" to ensure proper reinforcements. Advise the Architect where visible fasteners, such as thru bolts, are required.

B. Provide screws, bolts, expansion shields, drop plates and other devices necessary for hardware installation.
1. Where fasteners are exposed to view: Finish to match adjacent door hardware material.

C. Cable and Connectors:
1. Where scheduled in the hardware sets, provide each item of electrified hardware and wire harnesses with number and gage of wires enough to accommodate electric function of specified hardware.
2. Provide Molex connectors that plug directly into connectors from harnesses, electric locking and power transfer devices.
3. Provide through-door wire harness for each electrified locking device installed in a door and wire harness for each electrified hinge, electrified continuous hinge, electrified pivot, and electric power transfer for connection to power supplies.

2.3 HINGES

A. Manufacturers and Products:
1. Scheduled Manufacturer and Product:
   a. Ives 5BB series

B. Requirements:
1. Provide hinges conforming to ANSI/BHMA A156.1.
2. Provide five knuckle, ball bearing hinges.
3. 1-3/4 inch (44 mm) thick doors, up to and including 36 inches (914 mm) wide:
   a. Exterior: Standard weight, bronze or stainless steel, 4-1/2 inches (114 mm) high
   b. Interior: Standard weight, steel, 4-1/2 inches (114 mm) high
4. 1-3/4 inch (44 mm) thick doors over 36 inches (914 mm) wide:
   a. Exterior: Heavy weight, bronze/stainless steel, 5 inches (127 mm) high
   b. Interior: Heavy weight, steel, 5 inches (127 mm) high
5. 2 inches or thicker doors:
   a. Exterior: Heavy weight, bronze or stainless steel, 5 inches (127 mm) high
   b. Interior: Heavy weight, steel, 5 inches (127 mm) high
6. Adjust hinge width for door, frame, and wall conditions to allow proper degree of opening.

7. Provide three hinges per door leaf for doors 90 inches (2286 mm) or less in height, and one additional hinge for each 30 inches (762 mm) of additional door height.
8. Hinge Pins: Except as otherwise indicated, provide hinge pins as follows:
   a. Steel Hinges: Steel pins
   b. Non-Ferrous Hinges: Stainless steel pins
   c. Out-Swinging Exterior Doors: Non-removable pins
   d. Out-Swinging Interior Lockable Doors: Non-removable pins
   e. Interior Non-lockable Doors: Non-rising pins
9. Provide hinges with electrified options as scheduled in the hardware sets. Provide with number and gage of wires enough to accommodate electric function of specified hardware. Locate electric hinge at second hinge from bottom or nearest to electrified locking component. Provide mortar guard for each electrified hinge specified.

2.4 ELECTRIC POWER TRANSFER

A. Manufacturers:
   1. Scheduled Manufacturer and Product:
      a. Von Duprin EPT-10
   2. Acceptable Manufacturers and Products:
      a. No Substitute

B. Requirements:
   1. Provide power transfer with electrified options as scheduled in the hardware sets. Provide with number and gage of wires enough to accommodate electric function of specified hardware.
   2. Locate electric power transfer per manufacturer's template and UL requirements, unless interference with operation of door or other hardware items.

2.5 MORTISE LOCKS

A. Manufacturers and Products:
   1. Scheduled Manufacturer and Product:
      a. Schlage L9000 series
   2. Acceptable Manufacturers and Products:
      a. No Substitute

B. Requirements:
   1. Provide mortise locks conforming to ANSI/BHMA A156.13 Series 1000, Grade 1, and UL Listed for 3-hour fire doors.
   2. Indicators: Where specified, provide indicator window measuring a minimum 2-3/5-inch x 3/5 inch with 180-degree visibility. Provide messages color-coded using ANSI Z535 Safety Red with full text and/or symbols, as scheduled, for easy visibility. When applicable allows for lock status indication on both sides of the door.
   3. Provide locks manufactured from heavy gauge steel, containing components of steel with a zinc dichromate plating for corrosion resistance.
   4. Provide lock case that is multi-function and field reversible for handing without opening case. Cylinders: Refer to "KEYING" article, herein.
   5. Provide locks with standard 2-3/4 inches (70 mm) backset with full 3/4 inch (19 mm) throw stainless steel mechanical anti-friction latchbolt. Provide deadbolt with full 1-inch (25 mm) throw, constructed of stainless steel.
   6. Provide standard ASA strikes unless extended lip strikes are necessary to protect trim. Provide electrified options as scheduled in the hardware sets. Where scheduled, provide switches and sensors integrated into the locks and latches.
   7. Provide motor based electrified locksets that comply with the following requirements:
      a. Universal input voltage - single chassis accepts 12 or 24VDC to allow for changes in the field without changing lock chassis.
      b. Fail Safe/Fail Secure - changing mode between electrically locked (fail safe) and electrically unlocked (fail secure) is field selectable without opening the lock case.

c. Low maximum current draw - maximum 0.4 amps to allow for multiple locks on a single power supply.
d. Low holding current - maximum 0.01 amps to produce minimal heat, eliminate "hot levers" in electrically locked applications, and to provide reliable operation in wood doors that provide minimal ventilation and air flow.
e. Connections - provide quick-connect Molex system standard.

8. Lever Trim: Solid brass, bronze, or stainless steel, cast or forged in design specified, with wrought roses and external lever spring cages. Provide thru-bolted levers with 2-piece spindles.
   a. Vandlgard: Provide levers with vandal resistant technology for use at heavy traffic or abusive applications.
   b. Lever Design: LATITUDE (LAT)

2.6 CYLINDRICAL LOCKS - GRADE 1

A. Manufacturers and Products:
   1. Scheduled Manufacturer and Product:
      a. Schlage ND series
   2. Acceptable Manufacturers and Products:
      a. No Substitute

B. Requirements:
   1. Provide cylindrical locks conforming to ANSI/BHMA A156.2 Series 4000, Grade 1, and UL Listed for 3-hour fire doors.
   2. Indicators: Where specified, provide escutcheon with lock status indicator window on top of lockset rose:
      a. Escutcheon height (including rose) 6.05 inches high by 3.68 inches wide.
      b. Indicator window measuring a minimum 3.52-inch by.60 inch with 1.92 square-inches of front facing viewing area and 180-degree visibility with a total of.236 square-inches of total viewable area.
      c. Provide snap-in serviceable window to prevent tampering. Lock must function if indicator is compromised.
      d. Provide messages color-coded with full text and symbol, as scheduled, for easy visibility.
      e. Unlocked and Unoccupied message will display on white background, and Locked and Occupied message will display on red background.
   3. Cylinders: Refer to "KEYING" article, herein.
   4. Provide locks with standard 2-3/4 inches (70 mm) backset, unless noted otherwise, with 1/2-inch latch throw. Provide proper latch throw for UL listing at pairs.
   5. Provide locksets with separate anti-rotation thru-bolts, and no exposed screws.
   6. Provide independently operating levers with two external return spring cassettes mounted under roses to prevent lever sag.
   7. Provide standard ASA strikes unless extended lip strikes are necessary to protect trim.
   8. Provide electrified options as scheduled in the hardware sets.
   9. Lever Trim: Solid cast levers without plastic inserts and wrought roses on both sides.
      a. Vandlgard: Provide levers with vandal resistant technology for use at heavy traffic or abusive applications.
      b. Lever Design: LATITUDE (LAT)

2.7 CYLINDRICAL LOCKS - GRADE 2

A. Manufacturers and Products:
   1. Scheduled Manufacturer and Product:
      a. Falcon W series
   2. Acceptable Manufacturers and Products:
      a. No Substitute

B. Requirements:

1. Provide cylindrical locks conforming to ANSI/BHMA A156.2 Series 4000, Grade 2, and UL Listed for 3-hour fire doors.
2. Cylinders: Refer to "KEYING" article, herein.
3. Provide locks with standard 2-3/4 inches (70 mm) backset, unless noted otherwise, with 1/2-inch latch throw. Provide proper latch throw for UL listing at pairs.
4. Provide locksets with separate anti-rotation thru-bolts, and no exposed screws.
5. Provide independently operating levers with two external return spring cassettes mounted under roses to prevent lever sag.
6. Provide standard ASA strikes unless extended lip strikes are necessary to protect trim.
7. Lever Trim: Solid cast levers without plastic inserts and wrought roses on both sides.
   a. Lever Design: LATITUDE (LAT)

2.8 DEADBOLTS

A. Manufacturers and Products:
   1. Scheduled Manufacturer and Product:
      a. Falcon D100 Series
   2. Acceptable Manufacturers and Products:
      a. No Substitute

B. Requirements:
   1. Provide grade 1 deadbolt series conforming to ANSI/BHMA A156.
   2. Cylinders: Refer to "KEYING" article, herein.
   3. Provide deadbolts with standard 2-3/4 inches (70 mm) backset. Provide 2-3/8 inches (60 mm) where noted or if door or frame detail requires. Provide deadbolt with full 1-inch (25 mm) throw, constructed of steel alloy.
   4. Provide manufacturer's standard strike.

2.9 EXIT DEVICES

A. Manufacturers and Products:
   1. Scheduled Manufacturer and Product:
      a. Von Duprin 98/35A series
   2. Acceptable Manufacturers and Products:
      a. No Substitute

B. Requirements:
   1. Provide exit devices tested to ANSI/BHMA A156.3 Grade 1 and UL listed for Panic Exit or Fire Exit Hardware.
   2. Cylinders: Refer to "KEYING" article, herein.
   3. Provide smooth touchpad type exit devices, fabricated of brass, bronze, stainless steel, or aluminum, plated to standard architectural finishes to match balance of door hardware.
   4. Touchpad must extend a minimum of one half of door width. No plastic inserts are allowed in touchpads.
   5. Provide exit devices with deadlatching feature for security and for future addition of alarm kits and/or other electrified requirements.
   6. Provide exit devices with weather resistant components that can withstand harsh conditions of various climates and corrosive cleaners used in outdoor pool environments.
   7. Provide flush end caps for exit devices.
   8. Provide exit devices with manufacturer's approved strikes.
   9. Provide exit devices cut to door width and height. Install exit devices at height recommended by exit device manufacturer, allowable by governing building codes, and approved by Architect.
   10. Mount mechanism case flush on face of doors or provide spacers to fill gaps behind devices. Where glass trim or molding projects off face of door, provide glass bead kits.
   11. Provide cylinder or hex-key dogging as specified at non fire-rated openings.

12. Removable Mullions: 2 inches (51 mm) x 3 inches (76 mm) steel tube. Where scheduled as keyed removable mullion, provide type that can be removed by use of a keyed cylinder, which is self-locking when re-installed.
13. Provide factory drilled weep holes for exit devices used in full exterior application, highly corrosive areas, and where noted in hardware sets.
14. Provide electrified options as scheduled.
15. Top latch mounting: double- or single-tab mount for steel doors, face mount for aluminum doors eliminating requirement of tabs, and double tab mount for wood doors.
16. Provide exit devices with optional trim designs to match other lever and pull designs used on the project.
17. Special Options:
    a. SI
        1) Provide dogging indicators for visible indication of dogging status.
    b. XP
        1) Rim Exit Devices: provide devices with non-tapered smart latchbolt with 90 degrees latchbolt to strike engagement under stress and Static Load Resistance of 2000 pounds.
    c. QM
        1) Rim Exit Devices: provide devices with damper-controlled re-latching to reduce operational noise. Where lever trim is specified, provide damper controlled lever return.
    d. HH
        1) Provide wind and impact rated hurricane exit devices and mullions certified to comply with Florida Building Code (FBC) TAS 201, 202, 203.
    e. HW
        1) Provide wind rated hurricane exit devices and mullions certified to comply with ANSI-ASTM E330.
    f. CX
        1) Provide delayed egress devices, where scheduled, that are UL 294 listed, meet National Fire Protection Association (NFPA) and California Building Code governing delayed egress, and/or other local and national fire codes acceptable to authority having jurisdiction as required.
            h) Provide non-handed and field sizable device with 3/4 (19mm) throw deadlocking latch bolt. Device incorporates an internal RX switch that detects attempt to exit from applying less than 15lbs to the push pad, which causes this switch to start an irreversible alarm cycle. Key switch in device is capable of arming, disarming, or resetting the device; and indicator lamp determines status of the device.
            i) Provide devices capable of standard 15 second release delay and indefinite release delay as required by code, when tied into fire alarm system will release immediately when an alarm condition exists.
            j) Provide devices with all control inputs - door position input, external inhibit input, fire alarm input; auxiliary locking; nuisance alarm and internal horn; and, remote signaling output self-contained in the device assembly.
    g. CVC
        1) Provide cable-actuated concealed vertical latch system in two-point for non-rated or fire rated wood doors up to a 90 minute rating and less bottom latch (LBL) configuration for non-rated or fire rated wood doors up to 20 minute rating. Vertical rods not permitted.
            k) Cable: Stainless steel with abrasive resistant coating. Conduit and core wire ends snap into latch and center slides without use of tools.
            l) Wood Door Prep: Maximum 1 inch x 1.1875 inch x 3.875 inches top latch pocket and 1 inch x 1.1875 inch x 5 inches bottom latch pocket which does not require the use of a metal wrap or edge for non-rated or fire rated wood doors up to a 45 minute rating.
            m) Latchbolts and Blocking Cams: Manufactured from sintered metal low carbon copper-infiltrated steel, with molybdenum disulfide low friction coating.
            n) Top Latchbolt: Minimum 0.38 inch (10 mm) and greater than 90-degree engagement with strike to prevent door and frame separation under high static load.
            o) Bottom Latchbolt: Minimum of 0.44-inch (11 mm) engagement with strike.

p) Product Cycle Life: 1,000,000 cycles.
q) Latch Operation: Top and bottom latch operate independently of each other. Top latch fully engages top strike even when bottom latch is compromised. Separate trigger mechanisms not permitted.
r) Latch release does not require separate trigger mechanism.
s) Cable and latching system characteristics:
    i. Installed independently of exit device installation, and capable of functioning on door prior to device and trim installation.
    ii. Connected to exit device at single point in steel and aluminum doors, and two points for top and bottom latches in wood doors.
    iii. Bottom latch height adjusted, from single point for steel and aluminum doors and two points for wood doors, after system is installed and connected to exit device, while door is hanging
    iv. Bottom latch position altered up and down minimum of 2 inches (51 mm) in steel and aluminum doors without additional adjustment. Bottom latch deadlocks in every adjustment position in wood doors.
    v. Top and bottom latches in steel and aluminum doors and top latch in wood doors may be removed while door is hanging.

2.10 POWER SUPPLIES

A. Manufacturers and Products:
    1. Scheduled Manufacturer and Product:
        a. Schlage/Von Duprin PS900 Series

B. Requirements:
    1. Provide power supplies approved by manufacturer of supplied electrified hardware.
    2. Provide appropriate quantity of power supplies necessary for proper operation of electrified locking components as recommended by manufacturer of electrified locking components with consideration for each electrified component using power supply, location of power supply, and approved wiring diagrams. Locate power supplies as directed by Architect.
    3. Provide regulated and filtered 24 VDC power supply, and UL class 2 listed.
    4. Provide power supplies with the following features:
        a. 12/24 VDC Output, field selectable.
        b. Class 2 Rated power limited output.
        c. Universal 120-240 VAC input.
        d. Low voltage DC, regulated and filtered.
        e. Polarized connector for distribution boards.
        f. Fused primary input.
        g. AC input and DC output monitoring circuit w/LED indicators.
        h. Cover mounted AC Input indication.
        i. Tested and certified to meet UL294.
        j. NEMA 1 enclosure.
        k. Hinged cover w/lock down screws.
        l. High voltage protective cover.

2.11 CYLINDERS

A. Manufacturers:
    1. Scheduled Manufacturer and Product:
        a. VERIFY WITH OWNER

B. Requirements:
    1. Provide cylinders/cores to match Owner's existing key system, compliant with ANSI/BHMA A156.5; latest revision; cylinder face finished to match lockset, manufacturer's series as indicated. Refer to "KEYING" article, herein.

2.12 KEYING

A. Scheduled System: VERIFY WITH OWNER
   1. New factory registered system:
      a. Provide a factory registered keying system, complying with guidelines in ANSI/BHMA A156.28, incorporating decisions made at keying conference.
   2. Existing factory registered system:
      a. Provide cylinders/cores keyed into Owner's existing factory registered keying system. Comply with guidelines in ANSI/BHMA A156.28, incorporating decisions made at keying conference.
   3. Existing non-factory registered system:
      a. Provide cylinders/cores keyed into Owner's existing keying system managed by Owner's locksmith, complying with guidelines in ANSI/BHMA A156.28, incorporating decisions made at keying conference. Contact:
         1) Firm Name:
         2) Contact Person:
         3) Telephone:

B. Requirements:
   1. Construction Keying:
      a. Temporary Construction Cylinder Keying.
         1) Provide construction cores that permit voiding construction keys without cylinder removal, furnished in accordance with the following requirements.
            t) Split Key or Lost Ball Construction Keying System.
            u) 3 construction control keys, and extractor tools or keys as required to void construction keying.
            v) 12 construction change (day) keys.
         2) Owner or Owner's Representative will void operation of temporary construction keys.
      b. Replaceable Construction Cores.
         1) Provide temporary construction cores replaceable by permanent cores, furnished in accordance with the following requirements.
            w) 3 construction control keys
            x) 12 construction change (day) keys.
         2) Owner or Owner's Representative will replace temporary construction cores with permanent cores.
   2. Permanent Keying:
      a. Provide permanent cylinders/cores keyed by the manufacturer according to the following key system.
         1) Master Keying system as directed by the Owner.
      b. Forward bitting list and keys separately from cylinders, by means as directed by Owner. Failure to comply with forwarding requirements will be cause for replacement of cylinders/cores involved at no additional cost to Owner.
      c. Provide keys with the following features:
         1) Material: Nickel silver; minimum thickness of.107-inch (2.3mm)
         2) Patent Protection: Keys and blanks protected by one or more utility patent(s).
         3) Geographically Exclusive: Where High Security or Security cylinders/cores are indicated, provide nationwide, geographically exclusive key system complying with the following restrictions.
      d. Identification:
         1) Mark permanent cylinders/cores and keys with applicable blind code for identification. Do not provide blind code marks with actual key cuts.
         2) Identification stamping provisions must be approved by the Architect and Owner.
         3) Stamp cylinders/cores and keys with Owner's unique key system facility code as established by the manufacturer; key symbol and embossed or stamped with "DO NOT DUPLICATE" along with the "PATENTED" or patent number to enforce the patent protection.
         4) Failure to comply with stamping requirements will be cause for replacement of keys involved at no additional cost to Owner.

5) Forward permanent cylinders/cores to Owner, separately from keys, by means as directed by Owner.

e. Quantity: Furnish in the following quantities.
1) Permanent Control Keys: 3.
2) Master Keys: 6.
3) Change (Day) Keys: 3 per cylinder/core that is keyed differently
4) Key Blanks: Quantity as determined in the keying meeting.

2.13 KEY CONTROL SYSTEM

A. Manufacturers:
1. Scheduled Manufacturer:
a. Telkee
2. Acceptable Manufacturers:
a. HPC
b. Lund

B. Requirements:
1. Provide key control system, including envelopes, labels, tags with self-locking key clips, receipt forms, 3-way visible card index, temporary markers, permanent markers, and standard metal cabinet, all as recommended by system manufacturer, with capacity for 150% of number of locks required for Project.
a. Provide complete cross index system set up by hardware supplier, and place keys on markers and hooks in cabinet as determined by final key schedule.
b. Provide hinged-panel type cabinet for wall mounting.

2.14 DOOR CLOSERS

A. Manufacturers and Products:
1. Scheduled Manufacturer and Product:
a. Falcon SC70A series
2. Acceptable Manufacturers and Products:
a. No Substitute

B. Requirements:
1. Provide door closers conforming to ANSI/BHMA A156.4 Grade 1 requirements by BHMA certified independent testing laboratory. ISO 9000 certify closers. Stamp units with date of manufacture code.
2. Provide door closers with fully hydraulic, full rack and pinion action with aluminum cylinder.
3. Closer Body: 1-1/2-inch (38 mm) diameter with 5/8-inch (16 mm) diameter heat-treated pinion journal.
4. Hydraulic Fluid: Fireproof, passing requirements of UL10C, and requiring no seasonal closer adjustment for temperatures ranging from 120 degrees F to -30 degrees F.
5. Spring Power: Continuously adjustable over full range of closer sizes, and providing reduced opening force as required by accessibility codes and standards.
6. Hydraulic Regulation: By tamper-proof, non-critical valves, with separate adjustment for latch speed, general speed, and backcheck.
7. Pressure Relief Valve (PRV) Technology: Not permitted.
8. Provide special templates, drop plates, mounting brackets, or adapters for arms as required for details, overhead stops, and other door hardware items interfering with closer mounting.

2.15 DOOR CLOSERS

A. Manufacturers and Products:
1. Scheduled Manufacturer and Product:
a. Falcon SC80A series
2. Acceptable Manufacturers and Products:
a. No Substitute

B. Requirements:

1. Provide door closers conforming to ANSI/BHMA A156.4 Grade 1 requirements by BHMA certified independent testing laboratory.
2. Provide door closers with fully hydraulic, full rack and pinion action with aluminum cylinder.
3. Closer Body: 1-1/4-inch (32 mm) diameter, with 5/8-inch (16 mm) diameter heat-treated pinion journal.
4. Hydraulic Fluid: Fireproof, passing requirements of UL10C, and requiring no seasonal closer adjustment for temperatures ranging from 120 degrees F to -30 degrees F.
5. Spring Power: Continuously adjustable over full range of closer sizes, and providing reduced opening force as required by accessibility codes and standards.
6. Hydraulic Regulation: By tamper-proof, non-critical valves, with separate adjustment for latch speed, general speed, and backcheck.
7. Pressure Relief Valve (PRV) Technology: Not permitted.
8. Provide special templates, drop plates, mounting brackets, or adapters for arms as required for details, overhead stops, and other door hardware items interfering with closer mounting.

2.16 ELECTROMECHANICAL AUTOMATIC OPERATORS

A. Manufacturers and Products:
   1. Scheduled Manufacturer and Product:
      a. LCN Senior Swing
   2. Acceptable Manufacturers and Products:
      a. No Substitute

B. Requirements:
   1. Provide low energy automatic operator units that are electromechanical design complying with ANSI/BHMA A156.19.
      a. Opening: Powered by DC motor working through reduction gears.
      b. Closing: Spring force.
      c. Manual, hydraulic, or chain drive closers: Not permitted.
      d. Operation: Motor is off when door is in closing mode. Door can be manually operated with power on or off without damage to operator. Provide variable adjustments, including opening and closing speed adjustment.
      e. Cover: Aluminum.
   2. Provide units with manual off/auto/hold-open switch, push and go function to activate power operator, vestibule interface delay, electric lock delay, hold-open delay adjustable from 1 to 32 seconds, and logic terminal to interface with accessories, mats, and sensors.
   3. Provide drop plates, brackets, and adapters for arms as required to suit details.
   4. Provide motion sensors and/or actuator switches, and receivers for operation as specified. Provide weather-resistant actuators at exterior applications.
   5. Provide key switches, with LED's, recommended and approved by manufacturer of automatic operator as required for function as described in operation description of hardware sets. Cylinders: Refer to "KEYING" article, herein.
   6. Provide complete assemblies of controls, switches, power supplies, relays, and parts/material recommended and approved by manufacturer of automatic operator for each individual leaf. Actuators control both doors simultaneously at pairs. Sequence operation of exterior and vestibule doors with automatic operators to allow ingress or egress through both sets of openings as directed by Architect. Locate actuators, key switches, and other controls as directed by Architect.

2.17 DOOR TRIM

A. Manufacturers:
   1. Scheduled Manufacturer:
      a. Ives

B. Requirements:
   1. Provide push plates, push bars, pull plates, pulls, and hands-free reversible door pulls with diameter and length as scheduled.

2.18 PROTECTION PLATES

A. Manufacturers:
   1. Scheduled Manufacturer:
      a. Ives

B. Requirements:
   1. Provide protection plates with a minimum of 0.050 inch (1 mm) thick, beveled four edges as scheduled. Furnish with sheet metal or wood screws, finished to match plates.
   2. Sizes plates 2 inches (51 mm) less width of door on single doors, pairs of doors with a mullion, and doors with edge guards. Size plates 1 inch (25 mm) less width of door on pairs without a mullion or edge guards.
   3. At fire rated doors, provide protection plates over 16 inches high with UL label.

2.19 OVERHEAD STOPS AND OVERHEAD STOP/HOLDERS

A. Manufacturers:
   1. Scheduled Manufacturers:
      a. Glynn-Johnson

B. Requirements:
   1. Provide overhead stop at any door where conditions do not allow for a wall stop or floor stop presents tripping hazard.

2.20 DOOR STOPS AND HOLDERS

A. Manufacturers:
   1. Scheduled Manufacturer:
      a. Ives

B. Provide door stops at each door leaf:
   1. Provide wall stops wherever possible. Provide concave type where lockset has a push button of thumbturn.
   2. Where a wall stop cannot be used, provide universal floor stops.
   3. Where wall or floor stop cannot be used, provide overhead stop.
   4. Provide roller bumper where doors open into each other and overhead stop cannot be used.

2.21 HINGE PIN DOOR STOP

A. Manufacturers and Products:
   1. Scheduled Manufacturer and Product:
      a. Ives 74/75 Series
      b. Door Saver III

B. Requirements:
   1. Provide hinge pin door stops in carbon steel.
   2. Removable bushings shall accommodate 1/4-inch to 5/16-inch diameter hinge pins (74 series).
   3. Removable bushings shall accommodate 5/16-inch to 3/8-inch diameter hinge pins (75 series).
   4. Shall be capable of adjustment from 40-degrees to 180-degrees.

2.22 THRESHOLDS, SEALS, DOOR SWEEPS, AUTOMATIC DOOR BOTTOMS, AND GASKETING

A. Manufacturers:
   1. Scheduled Manufacturer:
      a. Zero International

B. Requirements:
   1. Provide thresholds, weather-stripping, and gasketing systems as specified and per architectural details. Match finish of other items.

2. Smoke- and Draft-Control Door Assemblies: Where smoke- and draft-control door assemblies are required, provide door hardware that meets requirements of assemblies tested according to UL 1784 and installed in compliance with NFPA 105.
3. Provide door sweeps, seals, astragals, and auto door bottoms only of type where resilient or flexible seal strip is easily replaceable and readily available.
4. Size thresholds 1/2 inch (13 mm) high by 5 inches (127 mm) wide by door width unless otherwise specified in the hardware sets or detailed in the drawings.

2.23 SILENCERS

A. Manufacturers:
1. Scheduled Manufacturer:
a. Ives

B. Requirements:
1. Provide "push-in" type silencers for hollow metal or wood frames.
2. Provide one silencer per 30 inches (762 mm) of height on each single frame, and two for each pair frame.
3. Omit where gasketing is specified.

2.24 ROLLER LATCHES

A. Manufacturers:
1. Scheduled Manufacturer:
a. Ives

B. Requirements:
1. Provide roller latches with 4-7/8 inches (124 mm) strike at single doors to fit ANSI frame prep. If dummy levers are used in conjunction with roller latch mount roller latch at a height as to not interfere with proper mounting and height of dummy lever.
2. Provide roller latches with 2-1/4 inches (57 mm) full lip strike at pair doors. Mount roller in top rail of each leaf per manufacturer's template.

2.25 DOOR POSITION SWITCHES

A. Manufacturers:
1. Scheduled Manufacturer:
a. Schlage

B. Requirements:
1. Provide recessed or surface mounted type door position switches as specified.
2. Coordinate door and frame preparations with door and frame suppliers. If switches are being used with magnetic locking device, provide minimum of 4 inches (102 mm) between switch and magnetic locking device.

2.26 FINISHES

A. FINISH: BHMA 626/652 (US26D); EXCEPT:
1. Hinges at Exterior Doors: BHMA 630 (US32D)
2. Aluminum Geared Continuous Hinges: BHMA 628 (US28)
3. Push Plates, Pulls, and Push Bars: BHMA 630 (US32D)
4. Protection Plates: BHMA 630 (US32D)
5. Overhead Stops and Holders: BHMA 630 (US32D)
6. Door Closers: Powder Coat to Match
7. Wall Stops: BHMA 630 (US32D)
8. Latch Protectors: BHMA 630 (US32D)
9. Weatherstripping: Clear Anodized Aluminum
10. Thresholds: Mill Finish Aluminum

PART 3 - EXECUTION

3.1 EXAMINATION

A. Prior to installation of hardware, examine doors and frames, with Installer present, for compliance with requirements for installation tolerances, labeled fire-rated door assembly construction, wall and floor construction, and other conditions affecting performance. Verify doors, frames, and walls have been properly reinforced for hardware installation.

B. Examine roughing-in for electrical power systems to verify actual locations of wiring connections before electrified door hardware installation.

C. Submit a list of deficiencies in writing and proceed with installation only after unsatisfactory conditions have been corrected.

3.2 INSTALLATION

A. Mount door hardware units at heights to comply with the following, unless otherwise indicated or required to comply with governing regulations.
   1. Standard Steel Doors and Frames: ANSI/SDI A250.8.
   2. Custom Steel Doors and Frames: HMMA 831.
   3. Interior Architectural Wood Flush Doors: ANSI/WDMA I.S. 1A
   4. Installation Guide for Doors and Hardware: DHI TDH-007.

B. Install door hardware in accordance with NFPA 80, NFPA 101 and provide post-install inspection, testing as specified in section 1.03.E unless otherwise required to comply with governing regulations.

C. Install each hardware item in compliance with manufacturer's instructions and recommendations, using only fasteners provided by manufacturer.

D. Do not install surface mounted items until finishes have been completed on substrate. Protect all installed hardware during painting.

E. Set units level, plumb and true to line and location. Adjust and reinforce attachment substrate as necessary for proper installation and operation.

F. Drill and countersink units that are not factory prepared for anchorage fasteners. Space fasteners and anchors according to industry standards.

G. Install operating parts so they move freely and smoothly without binding, sticking, or excessive clearance.

H. Hinges: Install types and in quantities indicated in door hardware schedule but not fewer than quantity recommended by manufacturer for application indicated.

I. Lock Cylinders:
   1. Install construction cores to secure building and areas during construction period.
   2. Replace construction cores with permanent cores as indicated in keying section.
   3. Furnish permanent cores to Owner for installation.

J. Wiring: Coordinate with Division 26, ELECTRICAL and Division 28 ELECTRONIC SAFETY AND SECURITY sections for:
   1. Conduit, junction boxes and wire pulls.
   2. Connections to and from power supplies to electrified hardware.
   3. Connections to fire/smoke alarm system and smoke evacuation system.
   4. Connection of wire to door position switches and wire runs to central room or area, as directed by Architect.
   5. Connections to panel interface modules, controllers, and gateways.
   6. Testing and labeling wires with Architect's opening number.

K. Key Control System: Tag keys and place them on markers and hooks in key control system cabinet, as determined by final keying schedule.

L. Continuous Hinges: Re-locate the door and frame fire rating labels where they will remain visible so that the hinge does not cover the label once installed.

M. Door Closers & Auto Operators: Mount closers/operators on room side of corridor doors, inside of exterior doors, and stair side of stairway doors from corridors. Mount closers/operators so they are not visible in corridors, lobbies and other public spaces unless approved by Architect.

N. Overhead Stops/Holders: Mount overhead stops/holders on room side of corridor doors, inside of exterior doors, and stair side of stairway doors.

O. Power Supplies: Locate power supplies as indicated or, if not indicated, above accessible ceilings or in equipment room, or alternate location as directed by Architect.

P. Thresholds: Set thresholds in full bed of sealant complying with requirements specified in Division 07 Section "Joint Sealants."

Q. Stops: Provide floor stops for doors unless wall or other type stops are indicated in door hardware schedule. Do not mount floor stops where they may impede traffic or present tripping hazard.

R. Perimeter Gasketing: Apply to head and jamb, forming seal between door and frame.

S. Meeting Stile Gasketing: Fasten to meeting stiles, forming seal when doors are closed.

T. Door Bottoms and Sweeps: Apply to bottom of door, forming seal with threshold when door is closed.

3.3 ADJUSTING

A. Initial Adjustment: Adjust and check each operating item of door hardware and each door to ensure proper operation or function of every unit. Replace units that cannot be adjusted to operate as intended. Adjust door control devices to compensate for final operation of heating and ventilating equipment and to comply with referenced accessibility requirements.
   1. Spring Hinges: Adjust to achieve positive latching when door can close freely from an open position of 30 degrees.
   2. Electric Strikes: Adjust horizontal and vertical alignment of keeper to properly engage lock bolt.
   3. Door Closers: Adjust sweep period to comply with accessibility requirements and requirements of authorities having jurisdiction.

B. Occupancy Adjustment: Approximately three to six months after date of Substantial Completion, examine and readjust each item of door hardware, including adjusting operating forces, as necessary to ensure function of doors and door hardware.

3.4 CLEANING AND PROTECTION

A. Clean adjacent surfaces soiled by door hardware installation.

B. Clean operating items per manufacturer's instructions to restore proper function and finish.

C. Provide final protection and maintain conditions that ensure door hardware is without damage or deterioration at time of Substantial Completion.

3.5 DOOR HARDWARE SCHEDULE

A. The intent of the hardware specification is to specify the hardware for interior and exterior doors, and to establish a type, continuity, and standard of quality. However, it is the door hardware supplier's responsibility to thoroughly review existing conditions, schedules, specifications, drawings, and other Contract Documents to verify the suitability of the hardware specified.

B. Discrepancies, conflicting hardware, and missing items are to be brought to the attention of the architect with corrections made prior to the bidding process. Omitted items not included in a hardware set should be scheduled with the appropriate additional hardware required for proper application.

C. Hardware items are referenced in the following hardware schedule. Refer to the above specifications for special features, options, cylinders/keying, and other requirements.

D. Hardware Sets:

Abbreviation	Name
FAL	Falcon
GLY	Glynn-Johnson Corp
IVE	H.B. Ives
LCN	LCN Commercial Division
SCE	Schlage Electronic Security
SCH	Schlage Lock Company
VON	Von Duprin
ZER	Zero International Inc

Legend:
Link to catalog cut sheet
Electrified Opening

HARDWARE GROUP NO. 01

For use on Door #(s):
107 109 110 202 203

Each to have:

3	EA	HINGE	5BB1 4.5 X 4.5			652	IVE
1	EA	STOREROOM LOCK	ND80P6D LAT			626	SCH
1	EA	ELECTRIC STRIKE	BY SECURITY CONTRACTOR			630	VON
1	EA	SURFACE CLOSER	SC81A FC			689	FAL
1	EA	KICK PLATE	8400 10" X 2" LDW B-CS			630	IVE
1	EA	WALL STOP	WS406/407CCV			630	IVE
1	EA	GASKETING	488SBK PSA			BK	ZER
1	EA	WIRE HARNESS	CON-XX AS REQUIRED				SCH
1	EA	CARD READER	BY SECURITY CONTRACTOR			BLK	SCE
1	EA	POWER / LOW VOTAGE POWER	BY SECURITY CONTRACTOR				VON

DOOR IS NORMALLY LOCKED. RESTRICTING ENTRY.
AUTHORIZED CREDENTIAL AT OUTSIDE CARD READER MOMENTARILY RELEASES ELECTRIC STRIKE TO ALLOW ENTRY OR BY KEY.
INSIDE LEVER ALWAYS ALLOWS EGRESS.

HARDWARE GROUP NO. 02

For use on Door #(s):
111 204

Each to have:

3	EA	HINGE	5BB1 4.5 X 4.5		652	IVE
1	EA	FIRE EXIT HARDWARE	98-L-BE-F-LAT		626	VON
1	EA	SURFACE CLOSER	SC71A HDPA		689	FAL
1	EA	KICK PLATE	8400 10" X 2" LDW B-CS		630	IVE
1	EA	WALL STOP	WS406/407CCV		630	IVE
1	EA	GASKETING	488SBK PSA		BK	ZER

HARDWARE GROUP NO. 03

For use on Door #(s):
108

Each to have:

3	EA	HINGE	5BB1 4.5 X 4.5		652	IVE
1	EA	CORRIDOR LOCK W/ OUTSIDE INDICATOR	L9456P6 LATA L583-363 OS-OCC		626	SCH
1	EA	ELECTRIC STRIKE WITH DEADBOLT CAPTURE	BY SECURITY CONTRACTOR	✓	630	VON
1	EA	SURFACE CLOSER	SC81A FC		689	FAL
1	EA	KICK PLATE	8400 10" X 2" LDW B-CS		630	IVE
1	EA	WALL STOP	WS406/407CCV		630	IVE
1	EA	GASKETING	488SBK PSA		BK	ZER
1	EA	WIRE HARNESS	CON-XX AS REQUIRED	✓		SCH
1	EA	CARD READER	BY SECURITY CONTRACTOR	✓	BLK	SCE
1	EA	POWER / LOW VOTAGE POWER	BY SECURITY CONTRACTOR	✓		VON

DOOR IS NORMALLY LOCKED. RESTRICTING ENTRY.
AUTHORIZED CREDENTIAL AT OUTSIDE CARD READER MOMENTARILY RELEASES ELECTRIC STRIKE TO ALLOW ENTRY OR BY KEY.
WHEN DEADBOLT IS THROWN IT DISABLES THE CARD READER.
INSIDE LEVER ALWAYS ALLOWS EGRESS.

HARDWARE GROUP NO. 04

For use on Door #(s):
103 104 105

Each to have:

6	EA	HINGE	5BB1HW 4.5 X 4.5 NRP			630	IVE
2	EA	POWER TRANSFER	EPT10 CON		✓	689	VON
1	EA	ELEC FIRE EXIT HARDWARE	RX-98-EO-F-CON		✓	626	VON
1	EA	ELECTRIC STRIKE	BY SECURITY CONTRACTOR		✓	630	VON
2	EA	SURFACE CLOSER	SC71A HDPA			689	FAL
2	EA	KICK PLATE	8400 10" X 2" LDW B-CS			630	IVE
2	EA	FLOOR STOP	FS18S			BLK	IVE
1	EA	RAIN DRIP	142AA			AA	ZER
1	SET	GASKETING	429AA-S			AA	ZER
2	EA	DOOR SWEEP	39A			A	ZER
1	EA	THRESHOLD	VERIFY SILL CONDITION			A	ZER
1	EA	CARD READER	BY SECURITY CONTRACTOR		✓	BLK	SCE
2	EA	DOOR CONTACT	7764 / 679-05 AS REQUIRED		✓	628	SCE
1	EA	POWER / LOW VOTAGE POWER	BY SECURITY CONTRACTOR		✓		VON

HARDWARE GROUP NO. 05

For use on Door #(s):
201

Each to have:

3	EA	HINGE	5BB1 4.5 X 4.5 NRP			652	IVE
1	EA	STOREROOM LOCK	ND80P6D LAT			626	SCH
1	EA	ELECTRIC STRIKE	BY SECURITY CONTRACTOR		✓	630	VON
1	EA	SURFACE CLOSER	SC81A SS FC			689	FAL
1	EA	KICK PLATE	8400 10" X 2" LDW B-CS			630	IVE
1	EA	WALL STOP	WS406/407CCV			630	IVE
1	EA	GASKETING	488SBK PSA			BK	ZER
1	EA	WIRE HARNESS	CON-XX AS REQUIRED		✓		SCH
1	EA	CARD READER	BY SECURITY CONTRACTOR		✓	BLK	SCE
1	EA	POWER / LOW VOTAGE POWER	BY SECURITY CONTRACTOR		✓		VON

DOOR IS NORMALLY LOCKED. RESTRICTING ENTRY.
AUTHORIZED CREDENTIAL AT OUTSIDE CARD READER MOMENTARILY RELEASES ELECTRIC STRIKE TO ALLOW ENTRY OR BY KEY.
INSIDE LEVER ALWAYS ALLOWS EGRESS.

HARDWARE GROUP NO. 06

For use on Door #(s):
106

Each to have:

4	EA	HINGE	5BB1HW 4.5 X 4.5 NRP		630	IVE
1	EA	STOREROOM LOCK	ND80P6D LAT		626	SCH
1	EA	ELECTRIC STRIKE	BY SECURITY CONTRACTOR	✓	630	VON
1	EA	LOCK GUARD	LG14		630	IVE
1	EA	SURFACE CLOSER	SC71A SS		689	FAL
1	EA	KICK PLATE	8400 10" X 2" LDW B-CS		630	IVE
1	EA	RAIN DRIP	142AA		AA	ZER
1	SET	GASKETING	429AA-S		AA	ZER
1	EA	DOOR SWEEP	39A		A	ZER
1	EA	THRESHOLD	VERIFY SILL CONDITION		A	ZER
1	EA	WIRE HARNESS	CON-XX AS REQUIRED	✓		SCH
1	EA	CARD READER	BY SECURITY CONTRACTOR	✓	BLK	SCE
1	EA	DOOR CONTACT	7764 / 679-05 AS REQUIRED	✓	628	SCE
1	EA	POWER / LOW VOTAGE POWER	BY SECURITY CONTRACTOR	✓		VON

DOOR IS NORMALLY LOCKED. RESTRICTING ENTRY.
AUTHORIZED CREDENTIAL AT OUTSIDE CARD READER MOMENTARILY RELEASES ELECTRIC STRIKE TO ALLOW ENTRY OR BY KEY.
INSIDE LEVER ALWAYS ALLOWS EGRESS.

HARDWARE GROUP NO. 07

For use on Door #(s):

112D	112E	113D	113E	114D	114E
115D	115E	116D	116E	117D	117E
205D	205E	206D	206E	207D	207E
208D	208E	209D	209E	210D	210E

Each to have:

3	EA	HINGE	1011 3.5 X 3.5	652	IVE
1	EA	PRIVACY LOCK	W301S LAT	626	FAL
1	EA	DOOR STOP	74 / 75 AS REQUIRED	F26	IVE
3	EA	SILENCER	SR64	GRY	IVE

HARDWARE GROUP NO. 08

For use on Door #(s):

112B	113B	114B	115B	116B	117B
205B	206B	207B	208B	209B	210B

Each to have:

3	EA	HINGE	1011 3.5 X 3.5		652	IVE
1	EA	ROLLER LATCH	RL32		626	IVE
1	EA	SINGLE DUMMY TRIM	W12 LAT		626	FAL
1	EA	DOOR STOP	74 / 75 AS REQUIRED		F26	IVE
3	EA	SILENCER	SR64		GRY	IVE

HARDWARE GROUP NO. 09

For use on Door #(s):

112C	113C	114C	115C	116C	117C
205C	206C	207C	208C	209C	210C

Each to have:

3	EA	HINGE	1011 3.5 X 3.5		652	IVE
1	EA	SINGLE DUMMY TRIM	W12 LAT		626	FAL
1	EA	SGL CYL X TURN DB	D141P6		626	FAL
1	EA	DOOR STOP	74 / 75 AS REQUIRED		F26	IVE
3	EA	SILENCER	SR64		GRY	IVE

HARDWARE GROUP NO. 10

For use on Door #(s):

112A	113A	114A	115A	116A	117A
205A	206A	207A	208A	209A	210A

Each to have:

3	EA	HINGE	5BB1 4.5 X 4.5		652	IVE
1	EA	STOREROOM LOCK	ND80P6D LAT		626	SCH
1	EA	ELECTRIC STRIKE	BY SECURITY CONTRACTOR	✓	630	VON
1	EA	OH STOP	450S		689	GLY
1	EA	SURFACE CLOSER	SC81A FC		689	FAL
1	EA	KICK PLATE	8400 10" X 2" LDW B-CS		630	IVE
1	EA	GASKETING	488SBK PSA		BK	ZER
1	EA	DOOR SWEEP	111AA		AA	ZER
1	EA	THRESHOLD	VERIFY SILL CONDITION		A	ZER
1	EA	VIEWER	U698		626	IVE
1	EA	CARD READER	BY SECURITY CONTRACTOR	✓	BLK	SCE
1	EA	POWER / LOW VOTAGE POWER	BY SECURITY CONTRACTOR	✓		VON

DOOR IS NORMALLY LOCKED. RESTRICTING ENTRY.
AUTHORIZED CREDENTIAL AT OUTSIDE CARD READER MOMENTARILY RELEASES ELECTRIC STRIKE TO ALLOW ENTRY OR BY KEY.
INSIDE LEVER ALWAYS ALLOWS EGRESS.

HARDWARE GROUP NO. 11

For use on Door #(s):

112F	113F	114F	115F	116F	117F
205F	206F	207F	208F	209F	210F

Each to have:

6	EA	HINGE	1011 3.5 X 3.5		652	IVE
2	EA	ROLLER LATCH	RL32		626	IVE
2	EA	SINGLE DUMMY TRIM	W12 LAT		626	FAL
2	EA	DOOR STOP	74 / 75 AS REQUIRED		F26	IVE
2	EA	SILENCER	SR64		GRY	IVE

HARDWARE GROUP NO. 12

For use on Door #(s):

101	102

Each to have:

8	EA	HINGE	5BB1HW 4.5 X 4.5 NRP		630	IVE
2	EA	POWER TRANSFER	EPT10 CON	✓	689	VON
1	EA	ELEC PANIC HARDWARE	RX-QEL-9849-EO-CON 24 VDC	✓	626	VON
1	EA	ELEC PANIC HARDWARE	RX-QEL-9849-NL-CON 24 VDC	✓	626	VON
1	EA	SURF. AUTO OPERATOR	9553 REG2 LESS TRACK AS REQ (120/240 VAC)	✓	ANCLR	LCN
1	EA	ACTUATOR PKG	8310-3857T	✓	630	LCN
1	EA	WEATHER RING	8310-801			LCN
1	EA	MOUNTING PLATE	9550-18 (LENGTH AS REQUIRED)		ANCLR	LCN
2	EA	KICK PLATE	8400 10" X 2" LDW B-CS		630	IVE
2	EA	FLOOR STOP	FS18S		BLK	IVE
1	EA	RAIN DRIP	142AA		AA	ZER
1	SET	GASKETING	429AA-S		AA	ZER
2	EA	DOOR SWEEP	39A		A	ZER
1	EA	THRESHOLD	VERIFY SILL CONDITION		A	ZER
4	EA	WIRE HARNESS	CON-XX AS REQUIRED	✓		SCH
1	EA	CARD READER	BY SECURITY CONTRACTOR	✓	BLK	SCE
2	EA	DOOR CONTACT	7764 / 679-05 AS REQUIRED	✓	628	SCE
1	EA	POWER SUPPLY	PS904 BBK 900-4RL KL900 120/240 VAC	✓	LGR	SCE

DOOR IS NORMALLY LOCKED. RESTRICTING ENTRY.
AUTHORIZED CREDENTIAL AT OUTSIDE CARD READER MOMENTARILY RETRACTS LATCH TO ALLOW ENTRY OR BY KEY.
AUTHORIZED CREDENTIAL AT OUTSIDE CARD READER TO ALLOW ADA PUSH BUTTON TO ACTIVATE AUTO OPERATOR AND OPEN DOOR INSIDE ADA PUSH BUTTON ALWAYS ACTIVE.
SHOULD OWNER DESIRE,ACCESS CONTROL SYSTEM MAY HAVE LATCH RETRACTED DURING OPEN HOURS TO ALLOW FREE PUBLIC ENTRY.
INSIDE TOUCHBAR ALWAYS ALLOWS EGRESS.

END OF SECTION

SECTION 088000 - GLAZING

PART 1 - GENERAL

1.1 SUBMITTALS

A. Product Data: Glass types and glazing compounds. Include performance charts showing transmittance and shading characteristics.

B. Samples: Glass Types: Each type indicated. Make samples not less than 8 inch square; obtain approval before proceeding.

C. Glazing Schedule: Submit schedule listing glass types and thicknesses for each size, opening, and location, using same designations indicated. Coordinate with product data to show specific products and applications to be used for Project.

D. Certificates:
   1. Low E Products, Glass, and Glazing: Certify in writing by manufacturer that products conform to specified requirements.
   2. Solar-Control Low E Glass: Document that glass unit manufacturer is certified by Low-E coating manufacturer.

E. Manufacturer's Instructions: Installation instructions and requirements, special procedures.

1.2 QUALITY ASSURANCE

A. Provide primary materials which are products of one manufacturer. Provide secondary and accessory materials which are acceptable to manufacturers of primary materials.

B. Glazer Qualifications: Able to document 3 years experience in cutting and installing glass for similar type and scope of work.

C. Allowable Tolerances: Thickness of glass specified are nominal. Provide glass manufactured to tolerances listed in GANA - FGMA Manual.

D. Glass thickness shown and heat treatment specified are minimum requirements. Provide glass thickness and heat treatment as required to meet specified performance criteria, State and local codes and ordinances.

E. Perform Work in accordance with GANA- FGMA Glazing Manual, GANA Sealant Manual, and GANA Laminated Glass Design Guide for glazing installation methods.

F. Quality and Dimensional Requirements: ASTM C1036, ASTM C1048, Q3 Glazing, Select Quality, or Better.

G. Low E Coatings:
   1. Products: Supply from single coating manufacturer.
   2. Glass Unit Manufacturer: Certified by coating manufacturer.
   3. Color Rendition: No apparent difference in reflectivity, hue, shade, and visible light transmittance between glass panes when viewed from outside and inside building.

H. Labels: Removable.

1.3 WARRANTY

A. Coated Glass: Manufacturer 10 year warranty to replace glass coating deterioration not attributed to abuse, misuse, or breakage.

B. Sealed Insulating Glass Units: Manufacturer's 10 year Warranty against failure of hermetic seal, including interpane dusting or misting, other than through glass breakage.

C. Laminated Glass: Manufacturer 10 year warranty against delamination. Replace units failing to comply at no additional cost to the Owner, including labor and materials, within 45 working days after receipt of written notice.

PART 2 - PRODUCTS

2.1 GLASS MANUFACTURERS AND FABRICATORS

A. Manufacturers/Fabricators: Provide products from one of the following, or Architect-approved substitution:
   1. Guardian Glass, LLC.
   2. Pilkington North America/NSG Group.
   3. Viracon.
   4. Vitro Architectural Glass (Formerly PPG).

B. Approved Substitutions: Architect-approved equal products submitted as specified for substitutions.

2.2 REGULATORY REQUIREMENTS

A. Safety Glazing: 16 CFR 1201, Category II. Include safety glazing labeling acceptable to authorities having jurisdiction.
   1. Comply with safety glazing using either tempered glass or laminated glass, unless the type is indicated.

B. Solar Heat Gain Coefficients and U-Factors: Conform to energy code indicated, and requirements of Contract Documents.

2.3 PERFORMANCE / DESIGN CRITERIA FOR EXTERIOR INSULATING GLASS (IG) UNITS

A. Wind, Seismic, and Dead Loads: As indicated on Structural Drawings.

B. Uniform Load-Resistance: Glass thickness designations indicated are minimums. Analyze and confirm specified glass thickness, glass strengths, opening configurations, and sizes conforming to ASTM E1300 for specified glass type and combinations of glass types, by analyzing Project loads and in-service conditions.

C. Seismic Requirements: Determine in conformance to ASCE/SEI 7.

D. Engineered Analysis: Conduct to prevent manufacturing and fabrication defects resulting in glass breakage under normal stresses due to thermal stress, deflection, impact, edge bit, sealants, and other design factors affecting work of this Section.

2.4 ANNEALED GLASS

A. Interior Annealed: ASTM C1036, Type 1 transparent flat, Class 1- clear, Quality q3 - glazing select.

B. Exterior Annealed: ASTM C1036, Type 1 transparent flat, Class 1- clear, Quality q3 - glazing select with minimum 91 percent visible light transmission and a minimum solar heat gain coefficient of 0.87.

2.5 TEMPERED GLASS

A. Tempered Glass - Where required for Safety Glazing if not Laminated: 1/4 inch thick, clear tempered with horizontal tempering conforming to ANSI Z97.1 and CPSC 16 CFR-1201, Category II.

2.6 LAMINATED GLASS

A. Safety Glazing: Use laminated glass to greatest extent possible.

B. Annealed glass, conforming to ANSI Z97.1 and CPSC 16 CFR Part 1201 Category II.

C. Glass Thickness: 3/16 inch thick clear annealed glass, laminated to 3/16 inch thick clear float glass. Nominal 3/8 inch total thickness.

D. Plastic Interlayer: Polyvinyl butyral conforming to ASTM C1172, Kind LHS, Safety Rated, CPSC 16 CFR Part 1201 Category II.
   1. Vertical Glass: Minimum 0.030 thick.

2.7 SEALED GLASS INSULATING UNITS

A. Insulating Glass (IG) Units): Tested and certified to ASTM E2190.
   1. Dual sealed (black polyisobutylate primary seal and silicone secondary seal), double glazed units with dry air, argon, or krypton-filled interspace, filled with moisture absorbing desiccant, between two panes of clear heat strengthened glass or safety glass, except as otherwise specified or accepted by Architect.
   2. Specified Low E vacuum deposition coating.
   3. Spacer bars of clear anodized aluminum or stainless steel, mitered and spigoted corners, conforming to IGMA recommendations.
   4. Spacer bars conforming to Vitro Intercept warm edge technology, or Architect-approved equal.

2.8 SOLAR-CONTROL LOW-EMISSIVITY COATINGS (LOW E) - INSULATING GLASS (IG) UNITS

A. Low emissivity, triple silver, sputtered vacuum deposition coating (softcoat) on number 2 surface, clear 1/4 inch thick glass, separated by 1/2 inch dry air, argon, or krypton-filled interspace at sealed insulating glass units.

B. Guardian Glass: Sun-Guard SNX 62/27, SuperNeutral.
   1. Transmittance:
      a. Visible Light: 62 percent.
      b. UV: 6 percent.
      c. Solar Energy: 24 percent.
   2. Reflectance:
      a. Visible Light In: 11 percent.
      b. Visible Light Out: 12 percent.
      c. Solar Energy Out: 48 percent.
   3. ASHRAE U-Value:
      a. Winter Night: 0.28.
      b. Summer Day: 0.27.
   4. Relative Heat Gain: 65.
   5. Shading Coefficient: 0.31.
   6. Solar Heat Gain Coefficient (SHGC): 0.27.
   7. Light to Solar Gain (LSG) Ration: 2.30.

C. Vitro Architectural Glass: Solarban 70.
   1. Transmittance:
      a. Visible: 64 percent
      b. UV: 6 percent
      c. Solar: 25 percent
   2. Reflectance:
      a. Visible Light: 12 percent
      b. Total Solar Energy: 52 percent
   3. U-Value:
      a. Winter Night: 0.28.
      b. Summer Day: 26.
   4. Shading Coefficient: 32.
   5. Solar Heat Gain Coefficient (SHGC): 0.27.
   6. Light to Solar Gain (LSG) Ratio: 2.37.

D. Viracon: VNE1-63.
   1. Transmittance:
      a. Visible: 62 percent.
      b. UV: 5 percent.
      c. Solar: 23 percent.
   2. Reflectance:
      a. Visible Light: 10 percent.
      b. Solar Energy: 36 percent.
   3. ASHRAE U-Value:

a. Winter Night: 0.29.
b. Summer Day: 0.26.
4. Shading Coefficient: 0.33.
5. Solar Heat Gain Coefficient (SHGC): 0.29.
6. Light to Solar Gain (LSG) Ratio: 2.14.

2.9 SETTING AND GLAZING MATERIALS

A. Setting Blocks: Silicone compatible EPDM or silicone, 80 to 90 Shore A Durometer hardness, length of 0.1 inch for each square foot of glazing or minimum 4 inch by width of glazing rabbet space minus 1/16 inch by height to suit glazing method and pane weight and area.

B. Spacer Shims: Silicone compatible EPDM or silicone, 50 to 60 Shore A durometer hardness, minimum 3 inch long by one half the height of the glazing stop by thickness to suit application, self-adhesive on one face.

C. Glazing Gaskets: ASTM C864 Option II, resilient Silicone compatible EPDM or silicone, extruded shapes to suit glazing channel retaining slot, 50 to 60 Shore A durometer hardness, one piece with molded corners, black color.

D. Glazing Tapes:
1. Preformed butyl compound with integral resilient tube spacing device, 10 to 15 Shore A durometer hardness, coiled on release paper, size and thickness as required for conditions of installation, black color. Butyl glazing tape not accepted in fire-rated glass installations.
2. Expanded Cellular Glazing Tapes: Conform to AAMA 800.
3. Spacer Tape In Continuous Contact with Silicone: Tested for compatibility and approved for intended purpose by sealant manufacturer.

E. Temporary Glazing Clips: Manufacturer's standard type.

F. Silicone Glazing Sealant: Single component, chemical curing, capable of water immersion without loss of properties, non-staining, cured Shore A hardness of 15-25, compatible with insulating unit edge seal, and as specified in Section 079200.

2.10 GLAZING COMPOUND FOR FIRE-RATED GLAZING MATERIAL

A. Glazing Tape: Closed cell polyvinyl chloride (PVC) foam, coiled on release paper over adhesive on two sides. Maximum water absorption by volume of two percent.

B. Glazing Compound: DAP 33 Glazing Putty or Architect-approved equal, knife grade, premixed.

C. Silicone Sealant Glazing Sealants: Single component, neutral curing silicone, medium modulus sealant. Type S; Grade NS; Class 25 with addition movement capability of 50 percent in both extension and compression (total 100 percent; Use (exposure) NT; Uses (substrates) G, A, and O as applicable. Color: Black unless otherwise noted.
1. Dow Corning 795.
2. General Electric Silglaze-II 2800
3. Tremco Spectrem 2

D. Setting Blocks: Silicone compatible EPDM or silicone; tested for compatibility with glazing compound; of 70 to 90 Shore A Durometer hardness.

E. Fire-rated Glazing Sealant: ASSA ABLOY Pemko FG3000 FireGlaze with FireGlaze linear square spacers to ensure thickness of installation.

PART 3 - EXECUTION

3.1 GLAZING INSTALLATION

A. Conform to manufacturer's instructions and provisions of Contract Documents.

3.2 GLASS CUTTING

A. Cut to accurate sizes and shapes as required; allow edge clearances and tolerances in accordance with GANA recommendations, unless otherwise indicated. Glazing may be factory installed, as practical.

B. Annealed, and Laminated Glass: Cut for clean, accurate edges. Grind and polish edges indicated to be mitered

C. Tempered Glass: Provide factory-cutting and factory-formed edges, including drilled holes, notches, and other special fabrication and finishing techniques.

3.3 GLAZING

A. Glazing Options: Conform to following, except as otherwise specified or where conflicting with manufacturer's instructions.

B. Exterior Dry Method (Tape and Gasket Spline Glazing):
1. Cut glazing splines to length and install on glazing pane. Seal corners by butting tape and sealing junctions with compatible butyl sealant.
2. Place setting blocks at 1/4 points with edge block no more than 6 inch distance from corners.
3. Rest glazing on setting blocks and push against fixed stop with sufficient pressure to attain full contact.
4. Install removable stops without displacing glazing spline. Exert pressure for full continuous contact.
5. Trim protruding tape edge.
6. Take measures for other glazing systems as necessary achieve air barrier, vapor retarder seal to glazing frame, and pressure equalized glazing space.

C. Exterior - Wet/Dry Method (Preformed Tape and Sealant):
1. Cut glazing tape to length and set against stops 3/16 inch below sight line. Seal corners by butting tape and dabbing with butyl or silicone sealant.
2. Apply heel bead of butyl or silicone sealant along intersection of stop with frame making full perimeter seal between glass and frame.
3. Place setting blocks at 1/4 points with edge block no more than 6 inch distance from corners.
4. Rest glazing on setting blocks and push against tape and heel bead of sealant with sufficient pressure to attain full contact at perimeter of pane of glass unit.
5. Install removable stops, with spacer strips inserted between glazing and applied stops, 1/4 inch below sight line.
6. Fill gap between glazing and stop with silicone sealant to depth equal to bite of frame on glazing, but not more than 3/8 inch below sight line.
7. Apply cap bead of silicone sealant along void between the stop and the glazing, to uniform line, flush with sight line. Tool or wipe sealant surface smooth.

D. Exterior - Wet Method (Sealant and Sealant):
1. Place setting blocks at 1/4 points and install glazing unit.
2. Install removable stops with glazing centered in space by inserting spacer shims both sides at 24 inch intervals, 1/4 inch below sight line.
3. Fill gaps between glazing and stops with silicone sealant to depth of bite on glazing, but not more than 1/3 inch below sight line to ensure full contact with glazing and continue the air and vapor seal.
4. Apply sealant to uniform line, flush with sight line. Tool or wipe sealant surface smooth.

E. Interior - Dry Method (Tape and Tape):
1. Cut glazing tape to length and set against stops, projecting 1/16 inch above sight line.
2. Place setting blocks at 1/4 points with edge block no more than 6 inch distance from corners.
3. Rest glazing on setting blocks and push against tape for full contact at perimeter of pane or unit.
4. Place glazing tape on free perimeter of glazing in same manner described above.
5. Install removable stop without displacement of tape. Exert pressure on tape for full continuous contact.
6. Knife trim protruding tape.

F. Interior - Wet/Dry Method (Tape and Sealant):
1. Cut glazing tape to length and install against stops, projecting 1/16 inch above sight line.
2. Place setting blocks at 1/4 points with edge block no more than 6 inch distance from corners.

3. Rest glazing on setting blocks and push against tape to ensure full contact at perimeter of pane of unit.
4. Install removable stops, with spacer shims inserted between glazing and applied stops at 24 inch intervals, 1/4 inch below sight line.
5. Fill gaps between pane and applied stop with silicone sealant to depth equal to bite on glazing, to uniform and level line.
6. Trim protruding tape edge.

G. Interior - Wet Method (Compound and Compound):
1. Install glazing resting on setting blocks. Install applied stop and center pane by use of spacer shims at 24 inch centers, kept 1/4 inch below sight line.
2. Fill gaps between glazing and stops with glazing compound until flush with sight line. Tool surface to straight line.

END OF SECTION

SECTION 088300 - MIRROR GLASS

PART 1 - GENERAL

1.1 SUBMITTALS

A. Shop Drawings:
   1. Show mirror components and assembly, metal channel supports, fasteners, sizes, and dimensions.
   2. Include notations identifying room numbers and locations in project.

B. Product Data:
   1. Physical characteristics and size limitations of mirrors panels.
   2. Adhesive and environmental characteristics of mirror mastic.
   3. Safety back coating.

C. Samples: Approximately 12 inch square sample of mirror, and 6 inch J-Channel molding.

D. Manufacturer's Instructions: Include installation instructions, special handling procedures, and perimeter conditions requiring special attention.

1.2 QUALITY ASSURANCE

A. Fabricate, store, transport, receive, install, and clean mirrors in accordance with GANA Glazing Manual Tips for the Professional on the Care and Handling of Mirrors.

B. Manufacturer and Fabricator Qualifications: Company specializing in work of this Section with minimum 3 years documented experience manufacturing, and fabricating, commercial quality mirror products.

C. Installer Qualifications:
   1. Company specializing in work of this Section.
   2. Able to document minimum 3 installations of similar type and scope.

1.3 WARRANTY

A. Mirror Manufacturer: Standard 5 year Warranty of mirror from manufacturing defects including discoloration, black spots, clouding, and degradation of silver film.

PART 2 - PRODUCTS

2.1 SYSTEM

A. Frameless glass mirrors, as indicated on Drawings.

B. Mirror Wall: Composed of individual frameless mirror panels with polished edges, safety back coated, installed as a complete system.
   1. Cemented in place to wall with mirror mastic.
   2. Mount on bottom with continuous polished metal J-Channel mechanically fastened to solid framing or backing.

2.2 REGULATORY REQUIREMENTS

A. Conform to requirements of regulatory agencies.

B. Conforming to building code indicated and exemption for mirrors mounted on walls with continuous backing.

2.3 MIRROR GLASS MATERIALS

A. Glass: 1/4 inch thick, ASTM C1036 Type I - Transparent Flat Glass, Class 1-Clear, Quality-Q1.

B. Reflective Coating: Moisture and acid resistant silver/tin oxide (copper free).

C. Safety Back Coating: Conforming to ANSI Z97.1 standards for Category II safety glazing.

D. Perimeter Edges: Smooth, polished.

E. Butt Edges: Flat grind for almost invisible joint. Back butt edges with black tape.

2.4 ACCESSORIES

A. Mirror Mastic: Palmer, Mirro-Mastic, or Architect-approved equal.

B. Bottom Support Channel:
   1. Chrome plated or Stainless steel, Type 304 J-Channel molding, approximately 1/2 inch face by 3/8 inch depth by 1-1/2 inch leg.
   2. Continuous full length of mirror on all four sides. Include point block between mirror and J-Channel.

C. Fasteners: Screws, Type S, stainless steel or chrome plated bugle heads, designed to set flush with J-Channel molding, to suit installation, and as instructed by manufacturer.

D. Moisture Resistant Primer: Orange shellac or water resistant primer, as instructed by mirror manufacturer.

E. Joint Sealant: Clear neutral cure silicone, ASTM C920, Type S, Grade NS, Class 25 and as specified Section 079200.

2.5 FABRICATION

A. Fabricate silvered flat glass mirrors conforming to ASTM C1503.

B. Cut glass units to final sizes. Grind edges prior to application of silver/copper coating.

C. Fabricate sizes to fit full length of wall by 4 foot high. Where installation conditions do not permit full size panel, consult with Architect for location of butt joints.

PART 3 - EXECUTION

3.1 INSTALLATION

A. Install in accordance with manufacturer's instructions and provisions of Contract Documents.

B. Install mirrors plumb and level, free of optical distortion.

C. Maintain 1/16 inch to 1/4 inch edge clearance from surrounding construction.

D. Install bottom support channel with concealed screws into solid backing.
   1. Set screw heads flush with J-Channel.
   2. Provide smooth even surface to prevent damage to mirror.

E. Apply mirror mastic to wall and back of mirror in 2 inch diameter globs at 8 inch on center.
   1. Set into bottom support, align with adjacent mirror panels.
   2. Press into place making secure attachment to wall.

F. Butt mirror panels for continuous mirror wall.
   1. Maintain 1/16 inch space between butted edges.
   2. Back butt edges with black plastic tape.

G. Seal butt joints with clear silicone joint sealant.

3.2 TOLERANCES

A. Variations From Plumb: Maximum 1/8 inch variation in 10 foot.

B. Free from distortion in plane of mirror and between adjacent mirrors.

END OF SECTION

SECTION 092226 - GYPSUM CEILING SUSPENSION SYSTEMS

PART 1 - GENERAL

1.1 SUBMITTALS

A. Product Data: Manufacturer's catalog cuts describing standard framing systems, components, finishes, product criteria, load charts, and limitations.

B. Manufacturer's Instructions: Include installation instructions, rough-in dimensions, special procedures, and perimeter conditions requiring special attention.

C. Design Data: Seismic sway bracing in conformance to Code, and ICC Evaluation Services Evaluation Report or approval for steel framing systems showing load and deflection criteria, correlated to gypsum board materials specified.

1.2 QUALITY ASSURANCE

A. Installer Qualifications: Company specializing in work of this section with minimum 3 years documented experience.

PART 2 - PRODUCTS

2.1 SYSTEM

A. Steel Channel Ceiling Suspension System: Cold-formed steel main support channels, lateral support channels and furring channels supported by hanger wire to structural support.

B. Pre-engineered Suspended Tee Bar Suspension System: Flat ceiling interlocking main tees and cross tees as option to steel channel ceiling suspension system.

C. Drywall Suspension System.

2.2 MANUFACTURERS

A. Where Manufacturers/Products are Specified: Provide specified manufacturers/products, or approved substitution.

B. Approved Substitutions: Architect-approved equal products submitted as specified for substitutions.

C. Single Source Responsibility: Provide system and components specified in this Section and Section 092900 under a single installer's responsibility, for a complete installation.

D. Steel Channel Ceiling Suspension System: As specified this Section.

E. Pre-Engineered Tee Bar Ceiling Suspension System:
   1. Manufacturers: Provide products from one of the following, or approved substitution.
      a. Armstrong World Industries, Inc., Drywall Furring Systems.
      b. USG Corp.
      c. Rockfon North America, ROCKWOOL International (Chicago Metallic).

2.3 REGULATORY REQUIREMENTS

A. Framing Systems: Listed by ICC ES Evaluation Report for structural design properties.

2.4 MATERIALS

A. Cold Rolled Steel: ASTM C645, conforming to ASTM A568 Grade 33 or ASTM A653 Grade 33.
   1. Interior: Galvanized ASTM A653 G40.

2.5 STEEL CHANNEL CEILING SUSPENSION SYSTEM

A. Main Support Carrying Channels: Cold-rolled steel, 0.054 inch thickness by 1-1/2 inch deep.

B. Intermediate Lateral Support Runners: Cold-rolled steel, 0.054 inch thickness by 3/4 inch deep.

C. Furring Channels: Hat channels, 2-9/16 inch wide by 7/8 inch deep, 0.030 inch thickness, rolled formed steel, and as required by loading and deflection tolerances.

2.6 TEE BAR CEILING SUSPENSION SYSTEM

A. Straight Main Tees: 1-1/2 inch face width, 1-1/2 inch high by 144 inch long. Integral reversible splice with knurled face.

B. Cross Tees: 1-1/2 inch high, 48 inch long, 1-1/2 wide face. Integral reversible splice with knurled face. Quick release for positive locking and removal without need for tools.

C. Furring Channels (as applicable): 7/8 inch high, 48 inch ling, 1-7/16 inch face.

2.7 ACCESSORIES

A. Hanger Wire:
   1. Minimum 12 gauge galvanized soft annealed wire, as accepted by ICC Evaluation Report ER-4071.
   2. Minimum 9 gauge galvanized soft annealed wire at double layer gypsum board, equipment loading, and as required to limit deflection to L/360.

B. Tie Wire: 18 gauge galvanized soft annealed steel wire.

C. Furring Channel Clips: Manufacturer's standard galvanized wire, designed to attach furring channels to 1-1/2 inch cold rolled channels.

D. L-Type Runners: Minimum 24 gauge, 1 inch by 1 inch cold rolled galvanized steel.

E. Channel Molding: Minimum 24 gauge, 1-1/2 inch by 1 inch cold rolled galvanized channel.

F. Fastening Devices at Ceiling for Suspension: Conform to ASTM C754 and as instructed by manufacturer.

G. Screw Type Fasteners: ASTM C1002, self-drilling, self-tapping framing screws, designed for gauge of framing.

2.8 ACOUSTICAL ISOLATION HANGERS

A. Products: Provide one of the following, or approved substitution.
   1. Target Enterprises, ARH-1, 1/4 inch deflection.
   2. Mason, W30.
   3. Kinetics Noise Control, SRH.

B. Acoustical Isolation Hangers: Spring and neoprene, suspended ceiling isolation hanger unit with 1.0 inch static deflection. Designed to separate and isolate hanger wires between structural ceiling and suspended ceiling support system.

PART 3 - EXECUTION

3.1 STEEL CHANNEL CEILING SUSPENSION SYSTEM

A. Conform to manufacturer's instructions and provisions of Contract Documents.

B. Carrying Channel Runners:
   1. Secure 1-1/2 cold rolled channel with hanger wire to overhead construction.
   2. Space hanger wire and carrying channels not to exceed 4 foot on center each way, except where intermediate spacing is required to meet loading capacity and deflection tolerances.

C. Furring Channels: Wire tie or clip hat channels to carrying channel runners spaced at 16 inch on center.

D. Install L-channel at perimeter of suspension system to provide continuous support for fastening gypsum board and plaster ceiling finishes.

E. Install additional carrying channels and furring channels to accommodate duct work, lighting fixtures, and other ceiling penetrations where needed for intermittent support.

3.2 TEE-BAR CEILING SUSPENSION SYSTEM

A. Install in accordance with manufacturer's instructions and provisions of Contract Documents. Where in conflict, verify with Architect before beginning work.

B. Conform to ASTM C636, CISCA installation standards, UL Fire Resistance Directory, and other Regulatory Requirements for code compliance.

C. Flat Ceilings:
   1. Space main tees at maximum 48 inch on center.
   2. Support from hanger wire directly to structure above.
   3. Space at maximum 48 inch on center.
   4. Space cross tees at maximum 16 inch on center and as required to conform to UL.

D. Accessories: Install wall angles, channel molding, furring channel, attachment clips, transition clips, splice clips, as instructed by manufacturer for system assembly.

E. Install additional hanger wire, main tees, cross tees, and accessories as necessary to stabilize and complete system assembly
   1. Maintain visually acceptable gypsum board planes and corners free of telegraphing and visual surface defects.
   2. Accommodate duct work, lighting fixtures, and other ceiling penetrations where needed for intermittent support.

3.3 CONTROL JOINTS

A. Install control joints with framing members broken or spliced at spans exceeding 50 lineal foot or exceeding 2500 square foot overall if not indicated on Drawings.

B. Do not contact abutting construction such as walls and columns.

C. Seal with foam tape or joint sealant.

3.4 FIRE-RATED ROOF/CEILING ASSEMBLIES

A. Provide tents above light fixtures, conforming to ICC or UL approved, tested assemblies.

3.5 INSTALLATION TOLERANCES:

A. Maximum Variation From Level: 1/8 inch in 12 feet.

B. Maximum Deflection for Suspension System: L/360 of span.

END OF SECTION

THIS PAGE INTENTIONALLY LEFT BLANK

SECTION 092800 - BACKING BOARDS AND UNDERLAYMENTS

PART 1 - GENERAL

1.1 SUBMITTALS

A. Product Data: Indicate physical characteristics and limitations.

B. Manufacturer's Instructions: Include installation requirements and conditions requiring special attention.

1.2 QUALITY ASSURANCE

A. Manufacturer Qualifications:
1. Company with minimum 5 years documented experience.
2. Able to supply complete and tested systems conforming to code.

B. Installer Qualifications:
1. Company specializing in work of this section with minimum 5 years documented experience in commercial quality work of comparable scope.

PART 2 - PRODUCTS

2.1 MANUFACTURERS, GENERAL

A. Where Manufacturers/Products are Specified: Provide specified manufacturers/products, or approved substitution.

B. Approved Substitutions: Architect-approved equal products submitted as specified for substitutions.

2.2 SYSTEM DESCRIPTION

A. Systems Include: Backer for following conditions:
1. Backing board underlayment for interior ceramic tile installations as part of TCNA method specified under Section 093013.

B. Conform to Tile Council of America (TCNA) Methods and provisions of Section 093013 for backer board types and use.

2.3 BACKING BOARDS

A. Glass-Fiber Reinforced Cementitious Backer Board: Portland cement based, glass fiber mesh reinforced tile backer board, nominal 1/2 inch thick, square or tapered edge, conforming to ASTM C1325 Type B or ANSI A118.9.
1. Products: Provide one of the following, or Architect-accepted substitution complying with Section 012500:
a. USG Corporation, Durock.
b. National Gypsum Company, PermaBase Cement Board.
c. Custom Building Products, a Quikrete Company; Wonderboard Lite Backerboard.

2.4 ACCESSORIES

A. Trim: Sheet Steel zinc coated by hot-dip process and as specified in Section 092900.

B. Screw Fasteners: ASTM C1002, 1-1/4 inch self-embedding bugle head and corrosion resistant coating, and as instructed by manufacturer.
1. Length: As required to penetrate minimum 3/8 inch into steel framing.
2. Wood Framing: Type W.
3. 20 Gauge Metal Framing: Type S
4. 18 Gauge or Heavier Metal Framing: Type S-12.

C. Nails: Galvanized roofing nails in lengths needed to penetrate minimum 1-1/4 inch into wood framing

D. Filler: Pre-sanded dry-set or latex Portland cement mortar.

E. Joint and Corner Tape: 2 inch wide, polymer-coated, open alkali-resistant glass-fiber mesh and as instructed by manufacture. Paper tape not accepted.

F. Joint Compound: Chemically curing type. Dying type joint compound not accepted.
   1. CertainTeed Saint-Gobain: ProRoc Lite Setting Compound.
   2. Georgia-Pacific Gypsum LLC: Speed Set.
   3. USG Corporation: Beadex Silver Set.
   4. USG Corporation: Sheetrock Easy Set.

G. Adhesives/Mortar Products: Latex Cement Mortar: ANSI A118.4, and as instructed by manufacturer for condition of use.

H. Joint Sealant: As specified in Section 079200 and TCNA E117.

PART 3 - EXECUTION

3.1 INSTALLATION

A. Conform to manufacturer's instructions and provisions of Contract Documents.

B. Screw to metal stud framing members at maximum 8 inch on center over stud framing spaced at maximum 16 inch on center. Set screw heads flush.

C. Fill fastening depressions and joints with specified organic adhesive or latex cement mortar for smooth, uniform surface free of cracks, depressions, and broken edges

D. Immediately embed glass-fiber mesh tape at joints and corners into organic adhesive or latex cement mortar and trowel smooth and level to face of panel.

E. Install additional fasteners and perform work as required to provide solid, firm substrate for ceramic tile installations specified in Section 093013.

F. Seal joints and openings around pipes, fittings, and fixtures with water proof flexible joint sealant.
   1. Allow areas to dry thoroughly prior to tile application.
   2. Wipe excess material from surface of panels.

END OF SECTION

SECTION 092900 - GYPSUM BOARD

PART 1 - GENERAL

1.1 SUBMITTALS

A. Product Data: Manufacturer's published descriptive literature for gypsum board types, trim accessories, and control joints pertinent to this Section.

B. Samples: Submit 12 inch long samples of each type of trim required.

C. Test Data: UL Design for each proprietary fire-resistive wall and ceiling assembly listing manufacturers and products. Unlisted manufacturers and products not accepted.

1.2 QUALITY ASSURANCE

A. Manufacturer Qualifications:
1. Company with minimum 5 years documented experience.
2. Able to supply complete and tested systems conforming to code.

B. Installer Qualifications:
1. Company specializing in work of this section with minimum 5 years documented experience in commercial quality work of comparable scope.

C. Single Source Responsibilities: Obtain each type of gypsum board and other panel products from one manufacturer. Provide accessories including adhesive, clips, attachment devices that are standard for panel manufacturer.

D. Mockups: Install in accordance with Division 01 requirements for mockups, and the following:
1. Install 8 square foot minimum mockups of Level 4 gypsum board finish and control joints.
2. Approved mockups may be incorporated into Work and become standard for approved workmanship and finishes.

PART 2 - PRODUCTS

2.1 MANUFACTURERS

A. Manufacturers: Provide products from one of the following, or approved substitution.
1. CertainTeed Saint-Gobain
2. Georgia-Pacific Gypsum LLC (GP)
3. National Gypsum
4. USG Corp. (USG)

B. Approved Substitutions: Architect-approved equal products submitted as specified for substitutions.

2.2 REGULATORY REQUIREMENTS

A. Conform to requirements for tested fire rated assemblies.
1. GA 600, Fire Resistance Design Manual.
2. UL, Fire Resistance Directory, or other testing agency and listing acceptable to authorities having jurisdiction.
3. IBC Chapter 25.
4. ICC Evaluation Reports and Standards.

2.3 PERFORMANCE / DESIGN CRITERIA

A. Gypsum Board Products: Conform to general provisions of ASTM C1396.
1. Ends square cut and edges tapered.
2. Gypsum Board at Non-Rated Assemblies unless indicated otherwise: 5/8 inch thick.
3. Gypsum Board at Fire-Resistive Rated Assemblies: 5/8 inch thick, UL labeled, and conforming to ICC ES Report for Type X or Type C as required to meet the requirements of the UL assembly.

4. Gypsum Board at Non-rated Ceiling Assemblies: 1/2 inch thick.

B. Mold-Resistant Interior Panels: Conform to general provisions of ASTM C1658 or ASTM C1396. Test to ASTM D3273 with Rating of 10 or Test to ASTM G21 with Score of 0.

C. Abuse-Resistant and Impact Resistant Interior Panels:
1. Description: Fiber Reinforced Interior Gypsum Board complying with ASTM C1278, Standard Classification for Fiber Reinforced Interior Gypsum Panel Products.
2. Performance properties in accordance with ASTM C1629:
   a. Abrasion Resistance: Meets or exceeds Level 1 requirements.
   b. Indentation Resistance: Meets or exceeds Level 1 requirements.
   c. Soft Body Impact Resistance: Meets or exceeds Level 2 requirements
   d. Hard Body Impact Resistance: Meets or exceeds Level 1 requirements.
3. ASTM E84 Surface-Burning Characteristics:
   a. Flame Spread: 5.
   b. Smoke Developed: 0.

2.4 MATERIALS

A. Paper Faced Gypsum Board: Conform to ASTM C1396. Type X fire-resistant type except where Type C fire-resistant type is indicated or required to meet UL assembly types.
1. CertainTeed: Type X Drywall.
2. GP: ToughRock Fireguard X Gypsum Board.
3. National Gypsum: Gold Bond Fire-Shield Gypsum Board.
4. USG: Sheetrock Brand Firecode X Gypsum Panels.

B. Moisture and Mold-Resistant Gypsum Board:
1. CertainTeed: Moisture and Mold Resistant Drywall with M2TechGP: Dens-Armor Plus Interior Panels
2. National Gypsum: Gold Bond eXP Interior Extreme Gypsum Panel.
3. USG: Sheetrock Brand Mold Tough Firecode X.

C. Ceiling Board: Provide one of the following, or accepted substitution:
1. CertainTeed: Interior Ceiling Board.
2. GP: ToughRock Spec24 Ceiling Board.
3. National Gypsum: High-Strength Ceiling Board.
4. USG: Sheetrock Interior Gypsum Ceiling Board.

D. Ceramic Tile Backer Board: As specified in Section 092800.

2.5 ACCESSORIES

A. Joint Materials: As recommended by gypsum board manufacturer for intended purpose.
1. Tape: Manufacturer's standard paper tape. Fiberglass tape not accepted.
2. Compound: Manufacturer's standard.
3. Conform to GA-201 and GA-216 for reinforcing tape, joint compound, adhesive, and water.
4. Do not use topping compounds for embedding tape or as first coat over trims and fasteners.

B. Thermal and sound-attenuation insulation: As specified in Section 072116.

C. Joint Sealant at Exposed Joints: Paintable, Non-setting, non-staining, and as specified in Section 079200 and 079219.

D. Firestopping and Smoke Sealants: As specified in Section 078400.

2.6 TRIM

A. Provide trim shapes as required to cover and make neat edges.

B. Paper Faced Metal Bead and Trim: ASTM C1047, electro-galvanized steel with paper face and flanges.
1. Outside corner beads.

2. Inside corners.
3. L-type edge trim.
4. J-shaped edge trim
5. 3/4 inch radius corner beads.
6. Casing beads.

C. Metal Trim Shapes: ASTM C1047.
1. Galvanized steel Expanded Flange Corner Bead, L-Trim, and J-Trim
2. Galvanized one-piece L-Trim, and J-Stop.
3. Zinc Control Joint No. 093.

2.7 FASTENERS

A. Screws conforming to ASTM C1002. Bugle or pan head, and lengths as required for securing materials in place.
1. Wood Framing and Backing: Type W.
2. Light Gauge Metal Framing: Type S.
3. 18 Gauge or Heavier Metal Framing: Type S-12.

B. Pneumatic Fasteners: ET&F Fastening Systems, Inc., AGS-100 Series, pneumatically driven knurled shank hardened steel pins, or Architect-approved equal.
1. Minimum 0.100 inch diameter.
2. Length to penetrate minimum 1/4 inch beyond steel stud framing.
3. ET&F Fastening Systems, Inc.'s Aericote 1000 corrosion-resistant coating.

PART 3 - EXECUTION

3.1 INSTALLATION

A. Conform to ASTM C840, GA-216, and manufacturer's instructions.

B. Corner Trim: Reinforce external corners with specified corner beads.

C. Edge Trim: Install square edged metal trim bead at exposed edges and boundaries of areas and where abutting dissimilar materials.

D. Control Joints: Conform to GA-234, except as otherwise indicated. Verify that required double framing is in place before installing control joints.
1. Door and Other Openings: Install control joints at each side of wall opening and at both sides of wall, except alcoves and similar wall configurations.
2. Continuous Wall Planes: Install control joints floor to ceiling at each 30 lineal foot of wall.
3. Ceilings: Install across ceiling at each 50 lineal foot distance and each 2500 square foot of ceiling area.
4. Joints with Other Materials: Install where gypsum board meets masonry, concrete, and other materials, except where joints are concealed under horizontal chair rails or other trim.

E. Other Trim: Install as indicated or required for complete and finished installation.

F. Panel Joints:
1. Layout: Design to reduce joints to minimum.
2. Install board in maximum lengths to minimize horizontal and vertical joints.
3. Start installation of panels at exterior wall to position butt joints as far away from exterior wall as possible.
4. Place edges in contact and fit neatly, without forcing into place.
5. Stagger joints on opposite sides of partitions and on same side of wall surface at adjacent joints.
6. Maintain 1/2 inch clearance from bottom of wall panel and top of floor. Seal with acoustical sealant.
7. In order to prevent wicking of moisture, do not let gypsum board rest on floor after installation.

G. Single Layer Systems: Install in accordance with ASTM C840. Where modified, amended, or required by fire resistive or sound isolation system, conform to the requirements of the manufacturer's tests, as approved.

H. Double Layer Systems: Install in accordance with ASTM C840, including System VIII for double layer gypsum wallboard installations applied with screws. Conform to required fire resistance standards.

I. Moisture and Mold Resistant Gypsum Board: Install at restrooms, kitchen, janitorial closets, and areas where moisture is present. Do not install as backer board for ceramic tile.

J. Ceramic Tile Backerboard: Install under provision of Section 092800 behind ceramic tile wall installations. Moisture resistant (green board) gypsum board not accepted as backer for ceramic tile.

K. Joint Sealant and Acoustical Sealant: Install to completely fill void between wallboard edges and adjacent surface.

L. Firestopping and Smoke Sealants: Install in accordance with Section 078400.

M. Plumbing, HVAC, and Electrical: Coordinate with Division 22, Division 23 and Division 26. Provide for installations and penetrations of ductwork, equipment, receptacles, and other work.

3.2 FINISHING

A. Conform to GA-214, ASTM C840, manufacturer's instructions, and provisions of Contract Documents.

B. Joints and Interior Angles:
   1. Center reinforcing tape over joint and coat into compound leaving approximately 1/64 inch to 1/32 inch under tape to provide proper bond.
   2. Follow with skim coat to embed tape, but not to function as second coat.
   3. Allow embedding coat to thoroughly dry prior to application of second coat.
   4. Allow second coat to thoroughly dry.
   5. Apply third coat evenly over and extending beyond second coat on joints, feathering to smooth uniform finish.

C. Beads, Trim, Fastener and Joint Depressions:
   1. Cover with three coats of taping and joint compound. Apply in different directions making smooth transitions with adjacent surfaces.
   2. Allow sufficient drying time between coats.
   3. Leave depressions flush with surface plane.

D. Sanding: Sand between coats and after final coat. Do not scuff paper, and do not sand to joint, fastener, or accessory surfaces. Repair blemishes and joint ridges. After final sanding, wipe drywall surfaces with a damp sponge to remove dust and particles. Finish uniformly smooth, and ready for paint finish specified in Section 099000.

3.3 TOLERANCES

A. Shim panels as necessary to conform to tolerances.

B. Between Board Faces: 1/16 inch offset.

C. Plane, Level, Warp, and Bow: 1/8 inch in 8 foot.

3.4 SCHEDULE OF LEVELS OF FINISH FOR GYPSUM BOARD SURFACES

A. Level 0 Finish: Not Used.

B. Level 1 Finish: Smoke barrier and fire-resistive construction in areas not open to view, such as plenum areas above ceilings, and other concealed spaces.
   1. Embed fire tape in one coat of joint compound at all joints and interior angles. Accessories not required. Excess joint compound, tool marks and ridges are acceptable.

C. Level 2 Finish: Where panel products are used as a substrate for tiling.
   1. Embed fire tape in one coat of joint compound at all joints, interior angles, and fasteners. Immediately wipe with a joint knife leaving a thin coating of joint compound over all joints and interior angles. Cover fasteners and accessories with one separate coat of joint compound. Surface shall be free of excess joint compound. Tool marks and ridges are acceptable.

D. Level 3 Finish: Mechanical, electrical utility areas not indicated for paint finish.
   1. Embed fire tape in one coat of joint compound at all joints, interior angles, and fasteners. Immediately wipe with a joint knife leaving a thin coating of joint compound over all joints and interior angles. Apply one separate coat of joint compound over all joints and interior angles. Apply two separate coats of joint compound over fasteners and accessories. Surface shall be smooth and free of tool marks and ridges.

E. Level 4 Finish: Gypsum board surfaces unless otherwise indicated. In-place mockup required.
   1. Embed fire tape in one coat of joint compound at all joints, interior angles, and fasteners. Immediately wipe with a joint knife leaving a thin coating of joint compound over all joints and interior angles. Apply two separate coats of joint compound over all flat joints, and one separate coat of joint compound over all interior angles. Apply three separate coats of joint compound over fasteners and accessories. Surface shall be smooth and free of tool marks and ridges.

F. Level 5 Finish: Not Used.

END OF SECTION

THIS PAGE INTENTIONALLY LEFT BLANK

SECTION 093013 - TILING

PART 1 - GENERAL

1.1 SUBMITTALS

A. Product Data: Manufacturer's published literature for each product specified.

B. Tile Samples: Full size in specified color.

C. Grout Samples: Cured colors and textures.

D. Control and Transition Trim Samples: Products, materials, and colors.

E. Sealant Samples: Cured colors and textures.

F. Certification: Written statement signed by Installer's representative and Contractor that grout, setting materials, and other accessories have been provided as specified, or where different, are as accepted by Architect.

G. Product Test Reports: Slip-Resistance of floor tile.

H. Manufacturer's standard cleaning instructions and maintenance guide.

1.2 MAINTENANCE MATERIAL SUBMITTALS

A. Submit maintenance stock to Owner. Obtain Owner's signed receipt from authorized representative.

B. Minimum one full carton for each tile unit color and size used, clean, and labeled as to manufacture and product.

C. Ceramic Tile Penetrating Sealer: Minimum one gallon in manufacturer's container, unopened, clearly labeled with manufacturer's logo and instructions for use.

D. Maintenance Cleaning Agent: 5 gallons in manufacturer's unopened container, clearly labeled with manufacturer's logo and instructions for use.

1.3 QUALITY ASSURANCE

A. Installer Qualifications: Company and employees specializing in work of this section with minimum 5 years documented experience.

B. Mockups for Each Type of Tiling Work: Install in accordance with Division 01 requirements for mockups, and the following:
   1. Construct mockups at adjacent wall and floor area, approximately 4 feet wide by 4 feet vertical by 4 feet horizontal.
   2. Build-in specified components of construction.
   3. Locate as directed by Architect at adjacent wall and floor area.
   4. Illustrate alignment of wall and floor patterns.
   5. Build-in specified components of construction including colored sealant at wall base.
   6. Incorporate Architect-accepted mockups into Work of this Contract.
   7. Protect accepted mockup as standard of quality for work of this Section.

PART 2 - PRODUCTS

2.1 PERFORMANCE REQUIREMENTS

A. Floor Tile System Performance: Service Requirements in accordance with TCNA "Extra Heavy" or greater, tested per ASTM C627 Robinson Floor Test cycles 1 through 14 at a minimum.

B. Slip-Resistance of Floor Tile: Dynamic Coefficient of Friction (DCOF, which replaces the withdrawn SCOF standard of ASTM C1028): As determined by testing identical products per ANSI A137.1 and ANSI A326.3 DCOF AcuTest procedure. Values specified are based on use of BOT 3000E test device.

1. Interior, Dry and Level (ID): Minimum 0.50 when tested using dry DCOF method per ANSI A326.3 Section 10.1.
2. Interior, Incidental Wetness, and Level (IW): Manufacturer-Declared, or in the absence of manufacturer-declared classification, minimum 0.50 when tested using wet DCOF per ANSI A326.3 Section 9.1.
3. Interior, Wet Plus, Level (IW+): Manufacturer-Declared, or in the absence of manufacturer-declared classification, minimum 0.60 when tested using wet DCOF per ANSI A326.3 Section 9.1.
4. Interior, Oils/Greases, Level (IOG): Manufacturer-Declared, or in the absence of manufacturer-declared classification, minimum 0.65 when tested using wet DCOF per ANSI A326.3 Section 9.1. Texture or added abrasive is required if tile is glazed.
5. Interior Ramps/Inclines, Landings (IRL): Minimum 0.65 when tested using wet DCOF per ANSI A326.3 Section 9.1. Texture or added abrasive is required if tile size is greater than 6"x6".

C. Lippage Control: Installation Method for Tile Greater than 12 Inches in Either Dimension: Install with a tile leveling system using straps, caps, and a tool for setting, including but not limited to the Tuscan Leveling System.

2.2 MANUFACTURERS

A. Where Manufacturers/Products are Specified: Provide specified manufacturers/products, or approved substitution.

B. Approved Substitutions: Architect-approved equal products submitted as specified for substitutions.

C. Single Source Requirements: Provide grout and setting products from same manufacturer.

D. Tile Products: As indicated on Drawings, or Architect-approved equal.

E. Setting Materials, Grouts, Waterproofing, Sealers, and Accessories:
1. Ardex Americas.
2. Bostik, an Arkema company.
3. Quikrete Companies; Custom Building Products (CBP).
4. Laticrete International, Inc.
5. MAPEI Americas.

F. Uncoupling/Waterproofing/Drainage Membrane, Metal Divider Trim, and Control/Transition Edge Trim Systems: Schluter Systems.

G. Crack and Control Joint Bridging/Waterproof Sheet Membrane/ Sound Isolation Membrane: Refer to catalog and website for additions to this specification.
1. Noble Company.
2. Architect-approved substitution.

2.3 REGULATORY REQUIREMENTS

A. Accessibility Requirements: Conform to ADA, ANSI A117.1, and requirements of authorities having jurisdiction.

2.4 TILE MATERIALS

A. Ceramic Tile: Meet or exceed ANSI A137.1, Standard Grade.

B. Floor Tile, Unless Otherwise Indicated: Provide unglazed, true through-color tile; glazed floor tile is not acceptable.

C. Trim: Match adjacent field tile pattern and color.

2.5 MORTAR

A. Conform to TCNA for Robinson test performance level specified.

B. Thin-Set Bond Coat: Mortar conforming to ANSI A118.4 with high-polymer, liquid acrylic latex additive used in place of water.
   1. ARDEX: X5 Flexible Thin Set Mortar.
   2. Bostik: Hydroment Tile-Mate 760 with Hydroment 447 Flex-A-Lastic Mortar Admixture.
   3. CBP: CustomBlend with Thin-Set & Mortar Admix.
   4. Laticrete: 211 Crete Filler Powder with Laticrete 4237 Latex Thin-Set Mortar Additive.
   5. Laticrete: 317 Thin-Set Mortar with Laticrete 333 Mortar Admix.
   6. MAPEI: KERABOND Dry Set Mortar with MAPEI KERALASTIC Liquid Polymer Additive.

C. LHT Large and Heavy Tile Mortar (formerly Medium Bed) Mortar conforming to ANSI A118.15H with non-sag characteristics.
   1. ARDEX
   2. Bostik.
   3. CBP: ProLite.
   4. Laticrete.
   5. MAPEI – Ultraflex LFT.

D. Thick Set Portland Cement Mortar Bed at Concrete Floors: Conform to ANSI A108.1B.

2.6 GROUT

A. Unsanded Grout - Tile Joints Under 1/8 inch Wide: High performance, colored, mildew-resistant grout conforming to ANSI A118.7.
   1. ARDEX: Flex Unsanded Grout.
   2. Bostik: Hydroment Dry Tile Grout with Hydroment.425 Acrylic Latex Multi-Purpose Mortar Admixture and Grout Additive used in place of mixing water, conforming to ANSI 118.4.
   3. CBP: Prism Non-Sanded Tile Grout, polymer modified.
   4. MAPEI: Keracolor U Unsanded Polymer-Modified Portland Cement Tile Grout.
   5. Laticrete: 1600 Series with Laticrete 1776 Grout Admix Plus.

B. Sanded Grout - Tile Joints 1/8 inch or Wider: High performance, colored, mildew-resistant grout, conforming to ANSI 118.7.
   1. ARDEX: Flex Sanded Grout.
   2. Bostik: Hydroment Ceramic Tile Grout Joint Filler with Hydroment 425 Acrylic Latex Multi-Purpose Mortar Admixture and Grout Additive used in place of mixing water, conforming to ANSI 118.4.
   3. CBP: Prism Sanded Tile Grout, polymer modified.
   4. MAPEI: Ultracolor Plus FA.
   5. Laticrete: 1500 Series with Laticrete 1776 Grout Admix Plus or PermaColor.

2.7 ACCESSORIES

A. Uncoupling/Waterproofing Membrane System:
   1. Products: Provide one of the following, or Architect-approved substitution.
      a. CBP: RedGard Uncoupling Mat.
      b. MAPEI: Mapeguard UM.
      c. Schluter Systems: Schluter-DITRA, polyethylene membrane, vacuum formed into 1/8 inch thick grid of square dovetail cavities, laminated to anchoring fleece on bottom side.
   2. Accessories: For waterproof installations include waterproofing tape, flexible waterproofing tape, and preformed corners, pipe collar, and as instructed by manufacturer to make complete uncoupling/waterproof drainage system.

B. Metal Divider and Edge Trim: Schluter Systems or Architect-approved equal, edge protection trim in lengths, sizes, and types to align top edge with ceramic tile floor surface and conforming to ADA requirements.
   1. Sloped Transition to Lower Hard Surface Transitions: Schluter-RENO-U, EB finish (Brushed Stainless Steel).
   2. Edge Protection Trim at Wall:
      a. Type 1: Schluter, SCHIENE, EB finish (Brushed Stainless Steel).
      b. Type 2: Schluter, QUADEC, EB finish (Brushed Stainless Steel).

3. Hard Surface Transitions: Schluter-SCHIENE.
4. Carpet Transitions: Schluter-RENO-TK.
5. Level Transitions, Expansion Joints, and Control Joints: Schluter-SCHIENE-M.
6. Inside Corner Wall to Wall and Wall to Floor Transition Control Joints: Schluter-DILEX-EKE.
7. Inside Wall to Floor Transition Control Joints: Schluter-DILEX AHK, ACGB finish (Brush Chrome Anodized Aluminum).
8. Floor Expansion Joints: Schluter, DILEX-KS.
9. Cove Trim: Schluter, DILEX-AHK, ACGB finish (Brushed Chrome Anodized Aluminum).

C. Shower Pan: Provide Kerdi curbless shower pan system as recommended by Schluter: https://www.schluter.com/schluter-us/en_US/curbless-showers or similar system by VEVOR with dry-pack mortar. Provide grate and flange as required.

D. Liquid Trowel Applied Waterproof Membrane and Anti-Fracture Membrane: Conform to ANSI A118.10.
1. ARDEX: 8+9 Waterproofing Compound.
2. Bostik: Hydroment, Ultra-Set.
3. CBP: RedGard.
4. Laticrete: Hydro Ban.
5. MAPEI: Mapelastic AquaDefense.

E. Cleavage Membrane: Minimum 10 mil polyethylene sheeting, or other bond breaking sheet material, as accepted by Architect.

F. Reinforcing: 2 x 2 mesh, 16/16 gauge welded wire fabric or as accepted by Architect.

G. Interior Expansion Joints (Control Joints), Joint Sealant, and Backer Material:
1. Conform to TCNA, EJ171. Match colors and textures of grout (sanded and unsanded).
2. Joints on Vertical Surfaces: ASTM C920, Grade NS, Class 25, Use NT, M, & G, mildew-resistant silicone or polyurethane or mildew-resistant silicone, single or multi-component.
3. Horizontal Joints: ASTM C920, Grade P, Class 25, Use T, M, & G, ASTM D2240 Durometer Hardness 35 or greater, polyurethane or mildew-resistant silicone, single or multi-component.

H. Ceramic Tile Penetrating Sealer: Two coat application.
1. CBP: Aqua Mix Sealer's Choice Gold, water-based penetrating sealer.

I. Ceramic Tile and Grout Cleaner: For stained tile and grout.
1. CBP: Aqua Mix Heavy Duty Tile & Grout Cleaner.

J. Other Materials: Conform to TCNA Methods specified in Part 3 of this Section, ANSI Standard Specifications, manufacturer's written instructions, and Contract Documents.

2.8 FINISHES

A. Ceramic Tile: As specified by this Section under Materials.

B. Grout Colors: As selected by Architect from manufacturer's available colors.

C. Metal Divider and Edge Trim: Stainless Steel.

D. Rubber and Thermoplastic Filler at Metal Trim: Schluter Color as selected by Architect.

E. Sealant Color: Match grout color and texture.

PART 3 - EXECUTION

3.1 INSTALLATION

A. Verify installation conditions as satisfactory to receive work of this Section.

B. Conform to TCNA Methods specified, installation of tile types, conditions, and performance requirements; manufacturer's instructions, ANSI Standards, and provisions of Contract Documents.

C. TCNA Methods:

1. Floors, Interior On-Ground or Above-Ground Concrete with Unbonded Mortar Bed: TCNA Method F111.
   a. Mortar Bed: 1-1/4 inch to 2 inch thickness unless otherwise indicated.
   b. Cementitious Bond Coat (On-Ground): Portland cement paste on mortar bed that is still workable. Bonding mortar for cured mortar bed:
      1) ANSI A118.1 or better or ISO C1 or better.
      2) When Porcelain Tile is Used: ANSI A118.4 or better or ISO C2 or better.
   c. Cementitious Bond Coat (Above-Ground): Portland cement paste on mortar bed that is still workable. Bonding mortar for cured mortar bed:
      1) Recommended by manufacturer for above-ground use.
      2) ANSI A118.5 or better or ISO C2S1 or better.
   d. Mortar Bed, Reinforcing, and Cleavage Membrane: ANSI A108.1A.
      1) Large Format Tile Mortar:
         a) CPB: MegaLite Ultimate Crack Prevention Large Format Tile Mortar.
      2) Mortar Coverage: Minimum 95 percent.
      3) Movement Joint Sealant: Commercial 100 percent silicone sealant in accordance with TCNA EJ171.
   e. Cementitious grout.
      1) CBP: Prism Ultimate Performance Grout.
2. Floors, Interior On-Ground Concrete: TCNA Method F115.
   a. Latex-portland cement bond coat. Install over concrete slab-on-ground.
3. Floors, Interior Above-Ground Concrete with Waterproof Membrane: F122A
   a. Bonded waterproof membrane and cementitious bond coat recommended by manufacturer for above-ground use.
   b. High performance grout.
4. Walls, Interior, Gypsum Board Over Stud Framing: TCNA W243
   a. Cementitious bond coat.
   b. Install over gypsum board, specified in Section 092900, on stud framing.
   c. Unsanded high performance grout.
5. Walls, Interior, Fiber-Reinforced Water-Resistant Backer Board Over Stud Framing: TCNA W247
   a. Cementitious bond coat.
   b. Install over fiber-cement backer board conforming to ASTM C1278 with vapor retarder membrane, specified in Section 092800, on stud framing.
   c. Unsanded high performance grout.
6. Walls, Interior, Stud Framing: TCNA Method W244C (with cement backing board).
   a. Cementitious bond coat.
   b. Install over glass mat water-resistant tile backer board or cement backer board with vapor retarder membrane, specified in Section 092800, on stud framing.
   c. Unsanded high performance or Epoxy grout.

D. Ceramic Tile: Conform to ANSI A108.5.

E. Grout Joints:
   1. Floors with Epoxy Grout: Conform to ANSI A108.6.
   2. Walls, and Other Floors: Conform to ANSI A108.10.

F. Evenly mix color and shade variations. Mix ceramic tile from different containers.

G. Grind and install to prevent visible cut edges.

H. Cut neatly around bases, trim, fixtures, and similar conditions.

I. Install ceramic tile trim shapes and cove base at floor perimeters.

J. Align ceramic tile joints at adjacent walls and floor.

K. Apply thin-set mortars using notched trowel, intended for purpose, and promptly install ceramic tile in one operation.

L. Pointing and Grouting:

1. Tool joints full and flush without voids or pinholes.
2. Clean excess gout from tile surface as work progresses.
3. Recess grout evenly at bottom of cushion edges and radius edges of tile.

M. Damp cure ceramic tile installations for 3 days in accordance with TCNA and ANSI standards.

N. Unspecified Installation Conditions: Conform to TCNA recommendations for conditions, and verify with Architect.

3.2 INTERIOR CERAMIC WALL TILE INSTALLATION

A. Install ceramic tile over tile backerboard specified in Section 092800. Do not install ceramic tile Installations over paper faced gypsum board, including moisture-resistant board (green board).
1. Apply leveling skim coat over tile backerboard, as necessary to provide smooth flat surface free of out of plane depressions and irregularities exceeding 1/8 inch in 10 foot.
2. Apply thin-set latex-portland cement mortar bond coat over prepared tile backerboard, using notched trowel, and promptly install ceramic tile in one operation.

3.3 INTERIOR CERAMIC FLOOR TILE INSTALLATION

A. Upper Level Floors: Thin-Set Ceramic Tile over Waterproof Membrane:
1. Apply liquid waterproof membrane over concrete floor substrate.
2. Apply thin-set latex-portland cement mortar bond coat over bonded waterproof membrane, using notched trowel, and promptly install ceramic tile in one operation.

B. Main Level Floors and Installations with Tile Greater than 15 Inches in any Dimension: Thick-Set Mortar Bed Ceramic Tile Over Cleavage Membrane:
1. Install cleavage membrane over concrete depressed slab area prior to installing mortar bed.
2. Install reinforced thickset mortar bed over cleavage membrane.
   a. Maintain 1-1/4 inch to 2 inch mortar bed thickness.
   b. Slope to floor drains.
3. Apply thin-set latex-portland cement bond coat over cured mortar bed, using notched trowel, and promptly install ceramic tile in one operation.

C. Thin-Set Ceramic Tile over Uncoupling/Waterproofing/Drainage Membrane: Conform to manufacturer's instructions as required to complete system installation.
1. Apply thin-set mortar bond coat over concrete substrate using notched trowel.
2. Solidly embed anchoring fleece side of polyethylene uncoupling membrane into mortar bed. Work membrane into mortar bed using float or screed trowel.
3. Seam joints with manufacturer's waterproofing strip to form continuous waterproof membrane.

D. Metal Divider and Edge Trim: Install at expansion joints, control joints, and changes in finish floor materials. Align top edge of trim with surface of ceramic tile.

E. Waterproof/Cleavage Membrane at Above Grade Concrete Slabs:
1. Install over concrete substrate, minimum 4 inch up tile backerboard at walls as unbroken waterproof barrier. Continue full height of tile installation at shower walls and other wet walls.
2. Install over top of thick-set mortar bed in accordance to manufacturer's instructions.
3. Install with full coverage, clamped to drains, with base flashings and manufacturer's recommended treatments at other termination points.

F. Extend ceramic tile into recesses and under equipment and fixtures to form a complete covering without interruptions.

G. Floor Tile Penetrating Sealer: Apply 2 coats in accordance with manufacturer's instructions.

H. Install ceramic tile cove base at floor perimeters.

3.4 EXPANSION JOINTS AND JOINT SEALANTS

A. Conform to TCNA EJ171 for expansion joint, isolation joint, perimeter joint construction joint, contraction joint, and generic movement joint systems, and provisions of Contract Documents.

B. Install joint sealant and backer rod or bond breaker tape conforming to TCNA EJ171 guidelines and Section 079200.

C. Install continuous control joints where tilework abuts restraining surfaces as necessary to allow independent differential expansion and contraction.

D. Install continuous control joint at floor perimeters, between ceramic tile floor and wall junctures, where tilework abuts other restraining surfaces, changes in wall or floor planes, and as necessary to permit independent differential expansion and contraction.

E. Install sealant at joints at built-in plumbing fixture perimeters of meeting ceramic tile.

F. Seal around pipes and other penetrations through ceramic tile.

END OF SECTION

THIS PAGE INTENTIONALLY LEFT BLANK

SECTION 095113 - LAY-IN ACOUSTICAL PANEL CEILINGS

PART 1 - GENERAL

1.1 SUBMITTALS

A. Shop Drawings: Reflected ceiling plans.
   1. Indicate grid layouts, dimensions, and profiles, and items to be installed on or with ceiling.
   2. Include junctions and interactions with other finishes, systems, and mechanical and electrical items.
   3. Show conformance with Code requirements.

B. Product Data: Manufacturer's technical data for each product.

C. Samples: Submit samples of each panel type illustrating color and range of appearance.

D. Manufacturer's Instructions: Include installation requirements, special procedures, and conditions requiring special attention.

1.2 MAINTENANCE MATERIAL SUBMITTALS

A. Acoustical Ceiling Panels: Furnish minimum one full carton of each type, size, and color installed. Deliver to Owner, packaged for storage at project closeout. Obtain receipt.

1.3 QUALITY ASSURANCE

A. Installer Qualifications: Company specializing in work of this Section with minimum 5 years documented experience installing commercial quality work of comparable scope.

B. Single Source Responsibility: Sections 095300 and 095113.
   1. Perform work by or under direct supervision of same installer.
   2. Provide tee bar ceiling grid and mineral fiber sound-absorbing acoustical ceiling panels by same manufacturer or as a single system by manufacturer.

1.4 WARRANTIES

A. Mineral Fiber Acoustical Ceiling Panels: Manufacturer standard 15 year Warranty against sag, and warping

PART 2 - PRODUCTS

2.1 SOUND-ABSORBING ACOUSTICAL CEILING PANELS

A. Products: Provide products indicated on Drawings, or approved substitutions. Manufacturers of acoustical ceiling panels include but are not limited to:
   1. Armstrong World Industries, Inc.
   2. CertainTeed Saint-Gobain.
   3. Rockfon North America, ROCKWOOL International (formerly Chicago Metallic)
   4. USG Corporation.

B. Material Descriptions, Characteristics, and Performance: Complying with that of products indicated.

C. Approved Substitutions: Architect-approved equal products submitted in conformance with provisions specified for substitutions.

2.2 REGULATORY REQUIREMENTS

A. Fire Rated Assemblies: Conform to UL Fire Resistance Directory and Building Material Directory for manufacturer's tested assembly.

B. Surface Burning Characteristics: UL Labeled Class A Rated, Flamespread 0-25, tested to ASTM E84.

2.3 SOUND-ABSORBING MINERAL FIBER ACOUSTICAL CEILING PANELS

A. Square Edge, Lay-In, 24 by 24 by 5/8 Inch, 15/16 Inch Grid:
   1. Armstrong.
   2. USG Interiors.
   3. CertainTeed, Fine Fissured No. Sereno Fine Fissure SFF-454HNRC/HCAC (Basis of Design).

2.4 ACCESSORIES

A. Suspension System: As specified in Section 095300.

B. As necessary to complete installation in accordance with manufactures instructions.

2.5 FINISHES

A. Exposed Panel Surface Color: Manufacturer's standard White, unless otherwise indicated.

PART 3 - EXECUTION

3.1 INSTALLATION OF LAY-IN ACOUSTIC PANELS

A. Conform to manufacturer's instructions, CISCA, and provisions of Contract Documents.

B. Install in suspended exposed tee grid systems specified in Section 095300.

C. Install continuously at entire ceiling areas designated for acoustical ceiling panels, except for where mechanical, electrical, and other penetrations, finishes, or treatments are indicated.

D. Fit units in place in manner to be free from damaged edges, soiled surfaces, and other defects to appearance and function.

E. Fit boarder units neatly against abutting surfaces.

F. Install level, in uniform plane, free from twist warp, and dents.

G. Neatly field cut new tegular edges into panels that are cut to less than full size so that panels lay flat and level in grid suspension system. Buttons and other shimmed panel methods not accepted.

END OF SECTION

SECTION 095300 - ACOUSTICAL CEILING SUSPENSION SYSTEMS

PART 1 - GENERAL

1.1 SUBMITTALS

A. Product Data: Published performance data on metal grid suspension systems and components conforming to ASTM C635.

B. Samples: Full-size sample of grid system unit illustrating material and finish to match color of acoustical panels specified Section 095113. Include clips and accessories for each system.

C. Delegated Design, Seismic: Show compliance with ASCE 7, ASTM A580, and Code requirements. Include shop drawings showing products and locations required for proper restraint. Prepare, sign, and seal by Professional Engineer licensed in Project jurisdiction.

D. Manufacturer's Installation Instructions: Indicate special procedures, perimeter conditions requiring special attention and recommendations for suspension system installation.
   1. Seismic Angle Moldings Clips with 7/8 inch Exposure: Submit ICC ES Report or acceptance report by authority having jurisdiction.

1.2 QUALITY ASSURANCE

A. Installer Qualifications: Company specializing in work of this Section with minimum 5 years documented experience installing commercial quality work of comparable scope.

1.3 WARRANTIES

A. Ceiling Grid System: Manufacturer standard 15 year Warranty against corrosion, rust, and manufacturing defects.

PART 2 - PRODUCTS

2.1 SYSTEM

A. Prefinished metal modular grid suspension system designed to secure acoustical ceiling panels and integral mechanical and electrical components.

B. Components: Lock together in a positive manner.

C. Install to conceal plenum space above acoustical ceiling system and to allow access.

D. Make provisions for vertical as well as horizontal suspension systems.

2.2 MANUFACTURERS

A. Single Source Responsibility: Provide system and components specified in this Section and Section 095113 under a single manufacturer's and installer's responsibility, for a complete installation that complies with system warranty requirements. Provide ceiling grid and mineral fiber sound absorbing acoustical ceiling panels by same manufacturer, or as part of manufacturer's system, as necessary to meet manufacturers warranty provisions.

B. Products: Provide from the following, or Architect-accepted substitution complying with Section 012500.
   1. Armstrong World Industries: Prelude XL System.
   2. Rockfon North America, ROCKWOOL International (formerly Chicago Metallic): 1200 System.
   3. USG Corp.: DX-26 Heavy Duty.

C. Approved Substitutions: Conform to provisions of Section 012500.

2.3 REGULATORY REQUIREMENTS

A. Suspension Systems: Conform to ICC ES AC368, including IBC Section 808 and Section 1613, ASTM E580, ASCE 7, and CISCA Seismic Construction Handbook as applicable.

2.4 PERFORMANCE AND DESIGN CRITERIA

A. Non-Fire Rated Grid: ASTM C635 Heavy Duty Classification (double web steel) exposed Tee with die cut components.

B. Minimum Design Components: Meet or exceed ASCE 7 and ASTM E580 for Seismic Design Category as defined by Structural Notes.

C. Main Runners and Cross Runners Pull out Tension: Minimum 180 pounds or twice the actual load whichever is greater, conforming to ASCE 7 and ASTM E580.

2.5 SUSPENDED TEE BAR GRID SYSTEM

A. Grid Materials: commercial quality cold-rolled electro-galvanized steel.
   1. Interior Tee Bar Grid: Minimum ASTM A653 G30.

B. Main-Tees: 15/16 inch exposed flange with rolled cap, minimum 1-1/2 inch deep.

C. Cross-Tees: 15/16 inch exposed flange with dimensional, minimum 1 inch deep to meet installation requirements.
   1. Extended Web: Forming positive interlock.
   2. Lower Flange: Extended and offset.

2.6 SEISMIC WALL MOLDINGS

A. Products: Provide one of the following, or Architect-approved substitution.
   1. Armstrong: BERC with Angle Molding, ICC-ES ESR-1308.
   2. Rockfon (Chicago Metallic) 1496, ICC-ES ESR-2282.
   3. USG: ACM7 CLIP Seismic Clip, ICC-ES ESR1222.
   4. CertainTeed: CTSPC-2, ICC-ESR-3336.

B. Non-Seismic Support Closure Angles: 7/8 inch wide by 7/8 inch high, for locations at opposite end of seismic clips.

C. Angle Moldings: Nominal 1 inch vertical and 2 inch horizontal legs.
   1. Armstrong: 7812.
   2. USG: M20 Seismic Wall Mold
   3. CertainTeed: 2" Wall Angle.

2.7 TRIM AND ACCESSORIES

A. Provide wall moldings, trim, and items indicated, for a complete system.

B. Hanger Wire: Conform to CISCA, and ASTM C636.
   1. 12 gauge supported at 4 foot centers and 10 gage supported at 5 foot centers. Other spacing as supported by structural calculations.
   2. Galvanized soft-annealed, mild steel.
   3. Pre-stretched, yield stress load of at least 3 times design load.

C. Lateral Seismic Force Bracing: Conform to ASTM E580 and ASCE 7.

D. Other Accessories and Components: Manufacturer's hanger wire, tee-clips, bracing angles, and as required to complete and reinforce system.

2.8 FINISHES

A. Exposed Tee Bar Grid Finish: Low-gloss factory-applied paint finish.

B. Color: Match color of acoustical panels specified Section 095113.

PART 3 - EXECUTION

3.1 INSTALLATION

A. Conform to manufacturer's instructions and provisions of Contract Documents, including ASTM E580, ASTM C636, and ASCE 7.

B. Suspend mechanical equipment and electrical fixtures independently from suspended ceiling system.

C. Install system capable of supporting imposed loads with L/360 maximum span deflection.

D. Lay out system to a balanced grid design with edge units no less than 50 percent of acoustical unit size, except as otherwise indicated by reflected ceiling plan.

E. Install after major above ceiling work is complete. Coordinate location of hangers with other work.

F. Hang suspension system independent from walls, columns, ducts, pipes, and conduit. Where hanging members are spliced, avoid visible displacement.

G. Where ducts or other components prevent regular spacing of hangers, reinforce to span extra distance.
   1. Do not interfere with mechanical or electrical work.
   2. Do not support from ductwork or piping.

H. Do not support components on main tees or cross tees where weight may cause dead loads to exceed deflection tolerances of system.

I. Support light fixture loads by supplementary hangers located within 6 inches of each corner or support components.

J. Do not eccentrically load system or cause forces resulting in rotation of tees.

K. Install hangers at maximum 8 inch from vertical surfaces. Do not splay more than 1 in 6 out of plumb in vertical drop.

L. Install stabilizer bar or other suitable system to keep perimeter main tees and cross tees from spreading apart.

M. Provide hangers, channels, connectors, clips, and as required for installation of ceiling related accessories.

N. Reinforce vertical support systems with metal angles pop riveted into horizontal and vertical main-tees at 24 inches on center, and as required for rigid system.

O. Install wall moldings and trims at interface of ceiling with vertical surfaces and other interruptions using longest practical lengths.
   1. Miter corners.
   2. Include outside corner caps.
   3. Attach to vertical surfaces with mechanical fasteners.

P. Form expansion joints to accommodate plus or minus 1 inch movement. Maintain visual closure.

3.2 TOLERANCES

A. Level main runners and cross tees to within 1/8 inch in 12 feet.

B. Maximum deflection for suspension system, including components, hangers, fastening devices, lighting fixtures, ceiling grilles and acoustical panels maximum L/360 of span.

END OF SECTION

THIS PAGE INTENTIONALLY LEFT BLANK

SECTION 096513 - RESILIENT BASE AND ACCESSORIES

PART 1 - GENERAL

1.1 SUBMITTALS

A. Product Data: Published product characteristics, performance data, and specifications.

B. Samples for Selection: Provide complete line of color swatches from manufacturer's selections.

C. Samples for Verification: Provide samples demonstrating selected colors.

D. Manufacturer's Instructions: Installation instructions, installation requirements, and perimeter conditions requiring special attention.

E. Maintenance Data: Manufacturer's cleaning and maintenance instructions.

1.2 MAINTENANCE MATERIAL SUBMITTALS

A. Extra Stock: Deliver to Owner's authorized representative after final acceptance at Jobsite. Obtain receipt.
   1. Minimum 100 linear foot (or not less than one roll) of 4 inch high rubber/vinyl composite base of each selected color and style.
   2. Reducer Strip: Twenty foot of each reducer strip in specified color.

1.3 QUALITY ASSURANCE

A. Installer Qualifications: Company specializing in work of this Section with minimum 5 years experience installing commercial quality work of comparable scope and quality specified for work of this Project.

B. Mockups: Install in accordance with Division 01 requirements for mockups, and the following:
   1. Provide sample installation of site-formed outside corner. Maintain approved mockup in place as standard of quality for remaining installations.

PART 2 - PRODUCTS

2.1 RUBBER BASE

A. Products: Roppe Corp, Pinnacle Type TS Base.

B. Vulcanized resilient rubber with matt finish with solid color throughout material, ASTM F1861 Type TS - Rubber, vulcanized thermoset.
   1. Matte finish with solid color throughout material.

C. Long Roll: Minimum 100 foot continuous base. No short lengths.

D. Height: 4 inch, except where 6 inch is shown on Drawings.

E. Gauge: 1/8 inch.

F. Toe Types:
   1. Style B - Coved toe at both resilient flooring and carpet installations.

2.2 RUBBER/VINYL COMPOSITE BASE

A. Products: Provide one of the following, or Architect-accepted substitution complying with Section 012500.
   1. Armstrong World Industries: Color-Integrated Rubber Wall Base.
   2. Flexco: Base 2000.
   3. Tarkett North America (formerly Johnsonite): Duracove Rubber Wall Base.
   4. Roppe Corp.: Series 700 TPR Base.

B. Extruded resilient base conforming to ASTM F1861 Type TP - Rubber, Thermoplastic.
   1. Matt finish with solid color throughout material.

2. Type TV - Vinyl, Thermoplastic base not accepted.

C. Long Roll: Minimum 100 foot continuous base. No short lengths.

D. Height: 4 inch, except where 6 inch is shown on Drawings.

E. Gauge: 1/8 inch.

F. Toe Types:
1. Style B - Coved Toe: For both resilient flooring and vinyl, back carpet installations.

2.3 VINYL REDUCER AND TRANSITION ADAPTER STRIPS

A. Carpet Reducer Strips to Resilient Flooring: Removable snap-down vinyl reducer adapter with single flange track. Use between cushion backed carpet and other cushion backed flooring and Resilient Flooring:
1. Armstrong, VT-703, (1-1/2 inch wide) with No. VT-253 Single Flange Track.
2. Tarkett, No. CE-XX-A Carpet to Tile Adapter (1-1/16 inch wide) with CDB-00-A Track Base.
3. Roppe, No. 154 Snap-Down Divider (1-9/16 inch wide) with No. 155 Single Flange Track.

B. Other Conditions: Suitable for purpose, as instructed by manufacturer and as accepted by Architect.

2.4 ACCESSORIES

A. Sealers, Fillers, Primers: Water-resistant type, as instructed by manufacturer.

B. Adhesives: As instructed by manufacturer.
1. Porous Surfaces: White acrylic cove base adhesive.
2. Non-Porous Surfaces: Contact bond adhesive.

C. Other Materials: Provide incidental and accessory materials, tools, methods and equipment required for completion of resilient covering installations.

2.5 FINISHES

A. Resilient Base Color: As selected by Architect from manufacturer's available colors.

B. Reducer/Transition Strip Color: Match base or as accepted by Architect.

PART 3 - EXECUTION

3.1 INSTALLATION

A. Install in accordance with manufacturer's instructions and provisions of Contract Documents.

3.2 RESILIENT BASE INSTALLATION

A. Install resilient base at wall perimeters of rooms and spaces to receive resilient flooring, carpeting, and other floors as indicated.

B. Provide around entire perimeter of rooms, including kick spaces at fixed casework.

C. Uncoil wall base 24 hours ahead of installation at room temperature to allow acclimation in the flat condition.

D. Install from ends toward center. Avoid stretching.

E. Using approved adhesives, cement directly to solid backing. Bond fully and tightly to wall and floor surfaces.

F. Fit joints for tight vertical joints. Maintain minimum measurement of 18 inch between joints for resilient base and full length for resilient stringers where possible.

G. Install with no joints on a single wall less than 25 foot apart.

H. Corners:
1. Internal Corners: Mark, miter, and fold resilient base at corner.

2. External Corners: Mark and cut V into 2/3 thickness, and wrap resilient base around corner.
3. Make relief cuts as necessary for smooth, even appearance.
4. Adhere with adhesive to hold permanently in place.
5. Premolded corner base not accepted.

I. Scribe and fit to door frames and other interruptions.

3.3 REDUCER AND TRANSITION STRIPS

A. Reducing Strips: Install at terminations and unprotected or exposed edge transitions between out-of-plane finish flooring transitions.

B. Install in longest possible lengths with no length less than 4 foot long.

C. Fit with tight hairline joints between adjoining strips.

END OF SECTION

THIS PAGE INTENTIONALLY LEFT BLANK

SECTION 096514 - RESILIENT STAIR ACCESSORIES

PART 1 - GENERAL

1.1 SUBMITTALS

A. Product Data: Product literature including characteristics, specifications, physical properties, and performance criteria.

B. Samples: Stair tread/riser, landing tile, and stringer samples in specified colors, patterns, and thickness.

C. Manufacturer's Instructions: Include installation requirements, special procedures, and conditions requiring special attention.

D. Maintenance Data: Manufacturer's cleaning and maintenance instructions.

1.2 MAINTENANCE MATERIAL SUBMTTALS

A. Extra Stock: Four 6 foot lengths of rubber stair treads and risers.

B. Deliver to Owner's authorized representative after final acceptance. Obtain receipt.

1.3 QUALITY ASSURANCE

A. Installer Qualifications:
1. Company and employees specializing in work of this Section.
2. Documented experience of minimum 3 commercial quality resilient stair tread and riser installations within last 3 years of comparable scope.
3. Trained and approved by manufacturer as qualified installer.

1.4 WARRANTIES

A. Conform to Warranty provisions specified in Section 016000.

B. Manufacturer: Standard 5 year wear warranty for stair treads and risers.

PART 2 - PRODUCTS

2.1 REGULATORY REQUIREMENTS

A. Fire Resistance:
1. Critical Radiant Flux: ASTM E648/NFPA 253: Class 1.
2. Smoke Density: ASTM E84, less than 450.

2.2 PERFORMANCE REQUIREMENTS

A. Hardness: ASTM D2240, Shore A, 87 percent.

B. Tensile Strength: ASTM D412, minimum 900 psi.

C. Elongation: ASTM D412, minimum 200 percent.

D. Water Absorption: ASTM D570, less than 0.3 percent.

E. Tabor Abrasion: ASTM C501, less than one gram loss, H-18 wheel, 5 gram load, 1,000 cycles.

F. Slip-Resistance: ASTM D2047, static coefficient of friction of 1.00 for dry leather shoes and 0.90 on foam rubber and solid rubber shoes dry and wet, random sampling.

G. Static Coefficient of Friction: ASTM D2047, 0.8-1.0.

2.3 MANUFACTURERS

A. Manufacturers: Provide products from one of the following, or Architect-approved substitution.
   1. Armstrong World Industries.
   2. Roppe Corp. USA.
   3. Tarkett Group; Johnsonite.

B. Approved Substitutions: Architect-approved equal products submitted as specified for substitutions.

2.4 MATERIAL

A. Composed of 100 percent synthetic virgin rubber, finely ground stabilizing fillers, migrating waxes and soil-releasing agents, high quality fade-resistance pigmentation with solid color throughout material, blended, calendared, and vulcanized, conforming to ASTM F1344. Raised discs on horizontal surfaces.

2.5 STAIR TREADS AND INTEGRATED RISERS

A. Base Gauge: 0.210 to 0.153 inches.

B. Length: 6 foot.

C. Tread Depth: 13

D. Integral Riser Height: 7 inch.

E. Nosing Depth: 2 inch.

F. Nosing Profile: Square.

G. Solid Rubber Color Stair Tread Insert at ADA Required Steps: 2 inch wide.

2.6 STAIR LANDING TILES

A. Tile Size: 24 inch by 24 inch

B. Thickness: 0.125 inch.

2.7 STRINGERS

A. Size: 72 inch by 10 inch.

B. Thickness: 0.125 inch.

2.8 FINISHES

A. Rubber Stair Treads and Risers: As selected by Architect from manufacturer's colors and textures.

2.9 ACCESSORIES

A. Leveling Compounds, Sealers, Fillers, and Primers: Water-resistant type, as supplied by or recommended by manufacturer.

B. Adhesives: Non-solvent base and as instructed by manufacturer for installation.

PART 3 - EXECUTION

3.1 INSTALLATION

A. Conform to manufacturer's instructions and provisions of Contract Documents.

B. Use trowel size for adhesives as instructed by manufacturer.

C. Scribe riser to meet nose of tread above.

D. Make seams and joints snug and tight.

E. Roll flooring with 150 pound roller.

END OF SECTION

THIS PAGE INTENTIONALLY LEFT BLANK

SECTION 096519 - RESILIENT TILE FLOORING

PART 1 - GENERAL

1.1 SUBMITTALS

A. Product Data: Manufacturer's published literature and data sheets and specifications.

B. Samples: Standard tile samples and termination trim.

C. Manufacturer's Instructions: Installation instructions, requirements, and finishing procedures.

D. Maintenance Data: Instructions for cleaning general care.

1.2 MAINTENANCE MATERIAL SUBMITTALS

A. Extra Stock Materials: Obtain written receipt when delivered to Owner's Representative
   1. Floor Tile: Furnish one carton for each color specified plus one additional carton for each additional 5,000 sf of each color.

1.3 QUALITY ASSURANCE

A. Installer Qualifications:
   1. Company specializing in work of this Section with minimum 3 years of documented experience installing commercial quality work of comparable scope.
   2. Approved as qualified installer by manufacturer's representative prior to Bid, or accepted by Architect.

B. Field Sample: Install in accordance with Division 01 requirements for field samples, and the following:
   1. Provide 64 square foot field sample showing color, pattern and joint treatment, in size and location as directed by Architect
   2. Field samples with acceptable joint layout, acceptable to Architect, may be incorporated into the Work.

1.4 WARRANTY

A. Manufacturer: Standard 5 year defect and wear warranty, including labor costs for first year and material costs for full 5 years.

PART 2 - PRODUCTS

2.1 PERFORMANCE / DESIGN REQUIREMENTS

A. Fire Test Data:
   1. Critical Radiant Flux: 0.45 watts/sq cm or more, ASTM E648, Class I.
   2. Flame Spread: 25 or less, tested to ASTM E84,
   3. Smoke Produced: 450 or less, tested ASTM E662.

2.2 SOLID VINYL TILE WITH ADDED WEAR LAYER (LUXURY VINYL TILE)

A. Basis of Design Products: Provide products indicated on Drawings, or Architect-accepted substitutions. Manufacturers of solid vinyl tile include but are not limited to:
   1. Armstrong World Industries, Inc.
   2. Interface, Inc.
   3. Mannington Commercial.
   4. Johnsonite, Tarkett Group.

B. Reference Standard: ASTM F1700.
   1. Class, Performance, Description, and Characteristics: Match Basis of Design products indicated.
   2. Luxury Vinyl Tile: With added high-performance wear layer.

C. Style: Plank flooring.

D. Gauge: 1/8 inch thick.

2.3 ACCESSORIES

A. Sealers, Fillers, Primers: Water-resistant type, as instructed by manufacturer.

B. Adhesives: Water-resistant types, as instructed by manufacturer.

C. Cleaner: Neutral type, as instructed by manufacturer for conditions of use.

2.4 FINISHES

A. Tile Colors and Patterns: As indicated.

PART 3 - EXECUTION

3.1 INSTALLATION

A. Conform to manufacturer's instructions, and provisions of Contract Documents.

B. Install tile where indicated and into:
   1. Alcoves and similar spaces off rooms.
   2. Under new casework and equipment subject to relocation in the future.
   3. Where flooring is exposed to view.

C. Do not install in concealed flooring such as under permanently built-in casework and equipment.

D. Mix tile from containers for consistent overall shade variations in field of flooring.

E. Spread only enough adhesive to permit installation of materials before initial set.

F. Set flooring in place and compress with heavy roller to attain full adhesion.

G. Lay tile symmetrically about centerlines of rooms or spaces, not less than 1/2 tile wide, insofar as possible.

H. Lay tile with intersecting tile corners in alignment. Run grain in alternating directions between adjacent tiles.

I. Terminate flooring at centerline of door openings where adjacent floor finish is dissimilar.

J. Feature tile and feature strips: Accommodate dimensioned layouts for patterns and features where shown.

K. Scribe flooring to walls, columns, cabinets, floor outlets, and other appurtenances to produce tight joints.

3.2 FIELD QUALITY CONTROL

A. Specified in Section 090561.

END OF SECTION

SECTION 099000 - PAINTING AND COATING

PART 1 - GENERAL

1.1 SUBMITTALS

A. Product Data: Provide in the same order as scheduled by this Section:
   1. Manufacturer's Product Data Sheets for each product.
      a. Performance features, substrate recommendations, primer recommendations (where required), and product limitations.
      b. Recommended dry film thickness.
      c. Solids by weight.
      d. Solids by volume.
   2. Product/Label Analysis for paint products:
      a. Pigment and vehicle percentages by weight.
      b. Pigment composition analysis, including fillers in percent by weight.
      c. Vehicle composition analysis, including resins, solvents, and additives by weight.

B. Chip Color Samples: Manufacturer's complete selection.

C. Painting and Coating Schedule: List each substrate, manufacturer and product for each primer, intermediate coat, and topcoat. Cross reference to Drawings for locations by designations on schedules. Include special preparation requirements, and recommended dry film thicknesses.

D. Certificate of Compatibility: Signed by manufacturer indicating compatibility of substrates, primers, and topcoats submitted.

E. Maintenance Data: Product data sheets, manufacturer's application instructions, product color name and number, cleaning instructions, and spot repair and repaint instructions.

F. Invoices and other data as necessary to verify quantities of each paint product suitable for coverage in conformance to manufacturer's instructions.

1.2 MAINTENCE MATERIAL SUBMITTALS

A. Minimum one gallon of each paint and coating type and color.

B. Identify each container as to manufacturer, product, color name, and number with minimum 5 inch press type. Tape over with clear tape.

C. Include manufacturer instructions and safety datasheet for each product submitted

D. Turn over to Owner prior to project completion. Obtain signed receipt.

1.3 QUALITY ASSURANCE

A. Manufacturer Qualifications: Employs full time locally available architectural product representative, technical field representative, testing equipment, and services as necessary to perform inspections and to determine compliance with manufacturer's instructions and provisions of Contract Documents.

B. Single Source Responsibility: Supply primers, intermediate, and finish coats for each paint and coating system from a single manufacturer, unless otherwise specified.

C. Applicator Qualifications:
   1. Able to document minimum 10 years continuous experience in commercial quality projects of similar type and scope.
   2. Employ qualified journeymen painters with apprentices under direction of qualified journeymen, conforming to trade regulations.

D. Testing Agency Qualifications: Provide products tested and listed by Master Painters Institute, or another independent third-party testing agency acceptable to Architect and Owner, which periodically tests painting

and coating systems for product listings, followed up with random testing, and field inspection and testing upon request.
1. Special Substitution Procedures for Paints and Coatings: As specified in Part 2 of this Section.

E. Field Samples for On-Site Verification of Finishes: Minimum three 10 square feet areas for each accepted color and substrate type. Show the range of color, sheen, and texture variations expected.
1. Location: As directed by Architect.
2. Protect and maintain accepted field sample as standard of quality for work of this Section.
3. Incorporate accepted field samples into Project. Refinish areas as required to produce acceptable work.

PART 2 - PRODUCTS

2.1 MANUFACTURERS

A. Manufacturers: Provide products from one of the following, or Architect-approved substitutions.
1. Benjamin Moore.
2. Dunn-Edwards Corp.
3. PPG Paints.
4. Sherwin-Williams Co.

B. Approved Substitutions: Architect-approved equal products submitted as specified for substitutions.
1. Indicate that manufacturer will conform to specified Qualifications, including requirement for manufacturer to employ and maintain full time architectural product representatives, technical field representatives, and testing equipment.
2. Product/Label Analysis: Submit indicating pigments and vehicles in percentages by weight and composition breakdown of pigments and vehicles in percentages by weight.
3. Submit schedule of paints and coatings organized as specified in this Section, showing proposed products and specified products prefaced by "PROPOSED:" and "SPECIFIED:".
4. Products That Are Currently Listed by MPI: Submit the current listings from MPI website, www.paintinfo.com, in PDF form.
5. Products That Are Not Currently Listed by MPI: Proposed products must include current product test reports from an independent testing agency within the past calendar year and certified in writing to be representative of the paint that will be used for this Project, showing performance which meets or exceeds the test results of products in the specified MPI product category, including VOC content, abrasion resistance, adhesion, corrosion weathering, dry heat resistance, and other characteristics of paints specified in this Section.
   a. Submit point-by-point comparisons of product test results, along with test reports from the proposed and specified products, for verification.

2.2 REGULATORY REQUIREMENTS

A. VOC Emissions: Comply with VOC limits of authorities having jurisdiction.

2.3 PERFORMANCE CRITERIA

A. Surface Preparation: Conform to MPI Architectural Painting Specifications Manual, SSPC, manufacturer's instructions, and Contract Documents, for work as needed to prepare substrates to be free of conditions that may impair adhesion and uniformity.
1. Remove bond breakers, dust, foreign matter, and surface irregularities.
2. Prepare to prevent bleed-through of substrate material.

B. Paint System Application: Conform to MPI Architectural Painting Specifications Manual, manufacturer's instructions, and Contract Documents.
1. Paint Grade: Conform to .
   a. Minimum one primer coat and two finish coats, except as otherwise specified.
   b. Additional coats as necessary to cover with no holidays or other surface imperfections.
2. Dry film thickness (DFT) and wet film thickness (WFT), as instructed by manufacturer.

2.4 MATERIALS

A. Painting and Coating Schedule: Refer to Schedule at end of this Section for products specified for specific finishes.

B. Surfaces Not Scheduled for Paints and Coatings: Where unscheduled surfaces are discovered following Bid, assume premium commercial quality paint or coating, meeting or exceeding Approved Product List, and as instructed by manufacturer's technical representative. Submit to Architect for acceptance prior to beginning work.

C. Coatings: Ready mixed, except catalyzed coatings. Process pigments to consistency for uniform and homogeneous coatings, good flow and brushing qualities, drying or curing free of streaks and sags.

2.5 GLOSS AND SHEEN LEVELS

A. Conform to Gloss and Sheen Levels as tested in accordance with ASTM D523, regardless of that stated by manufacturer product data and shown on paint containers.
   1. Gloss Level 2: Velvet/low-sheen, maximum 10 units at 60 degrees, and 10 to 35 units at 85 degrees.
   2. Gloss Level 3: Eggshell, 10 to 25 units at 60 degrees, and 10 to 35 units at 85 degrees.
   3. Gloss Level 4: Satin, 20 to 35 units at 60 degrees, and minimum of 35 units at 85 degrees.
   4. Gloss Level 5: Semigloss, 35 to 70 units at 60 degrees.

2.6 FINISHES AND COLORS

A. Product Systems and Gloss Levels: As Scheduled in this Section.

B. Colors: As indicated, or if not indicated, as selected by Architect from manufacturer's full range.

C. Gloss and Sheen Levels: As scheduled in this Section, and as follows for gypsum board finishes:
   1. Painted Gypsum Board:
      a. Ceilings: Gloss Level 2 (Velvet/low sheen).
      b. Walls: Gloss Level 3 (Eggshell).
      c. Wet Areas (restrooms, janitorial, shower area): Gloss Level 5 (Semi-Gloss).

PART 3 - EXECUTION

3.1 EXAMINATION

A. Verify conditions ready to receive work of this Section before beginning work.

B. Arrange for adequate lighting, temporary heat, and ventilation.

C. Maximum Moisture Content of Substrates: Conform to manufacturer's instructions and guidelines. Perform tests using commercial quality electronic moisture meter. Where exceeding following values, promptly notify Architect and obtain direction before beginning work.
   1. Interior Wood: 15 percent.
   2. Gypsum Materials: 17 percent.

3.2 MATERIALS TO BE FINISHED

A. Prepare and finish surfaces of materials, except as specifically excluded or otherwise specified.

B. Include Structural, Mechanical, and Electrical Items in rooms and spaces scheduled for painting. Paint out conduit and other such items to match color of adjacent surfaces.

C. Field paint exposed-to-view surfaces, whether or not indicated to receive coatings, except where specifically excluded by Contract Documents. Include:
   1. Pre-finished items such as conduit, ductwork, hangers and seats.
   2. Unfinished steel and wood surfaces.
   3. Interior utility panels, grilles, and surfaces visible through vents and louvers.

3.3 MATERIALS NOT TO BE FINISHED

A. Refer to Finish Schedule for rooms or areas not required to be field painted.

B. Metals: Brass, bronze, copper, stainless steel, pre-finished metal, and plated metals other than galvanized metal, except as specifically indicated.

C. Plastic laminate, melamine, and other finished plastic surfacing.

D. Roofing, masonry, stone, and concrete, except as otherwise indicated.

E. Glass and clear plastic, except as otherwise indicated.

F. Substrates with specified factory-applied colored finishes and normally unfinished substrates:
   1. Includes: Door hardware, electrical switch plates, fabrics, tackboards, porcelain enameled metal fabrications, and lighting fixtures.
   2. Exception: Wire mold and other normally prefinished items mounted on surfaces receiving coatings: Paint out to match and blend with field surface.

G. Inaccessible materials permanently enclosed behind building construction and structural components.

3.4 SURFACE PREPARATION UNDER WORK OF OTHER SECTIONS

A. Field Substrate Preparation Specified Under Work of Related Requirements: Crack free, finished, clean, and as needed to make substrates suitable for primers and finished coats specified for work of this Section, except minimal spot filling, spackling, and other preparation normally performed by work of this Section.

B. Shop Preparation and Primers for Metal Fabrications: Specified under work of Section 055000, except for spot priming and spot repair of shop primers prior to applying finish coats specified under this Section.

3.5 SURFACE PREPARATION PROCEDURES

A. Conform to:
   1. MPI Architectural Painting Specification Manual, Surface Preparation.
   2. SSPC- Surface Preparation Procedures.
   3. Manufacturer instructions.
   4. Contract Document provisions.

B. Mildew removal:
   1. Do not use bleach to remove mold from carbon-based materials. These include paper, cellulous, wood, sucrose (sugar), gypsum board, and materials that are considered food for mold.
   2. Contact Owner and Architect for remediation method for mold contamination of carbon-based materials.
   3. Proceed with methods to remove stains as specified by for non-carbon based materials.

C. Concrete and Concrete Unit Masonry Receiving Opaque Finish:
   1. Allow 28 day curing period before beginning work.
   2. Remove residues, dirt, loose material, sand particles, loose mortar, scale, laitance, powder, stains, rust, oil, grease, efflorescence, grease, and other bond breakers.
   3. Test plaster and masonry surfaces to verify cured and dry.
   4. Point, fill, and repair minor cracks, holes, and other surface imperfections.

D. Steel and Iron: Put in condition to receive paint. Remove grease, rust, scale, dirt, and dust. Use prime paints compatible with finish coats..
   1. Field Welded or Abraded Spots: Power tool, clean, and prepare, conforming to SSPC-SP-3. Spot prime by end of same day.
   2. Surfaces Shop Primed Conforming to Section 055000: Solvent clean free of oil and grease before coating, conforming to SSPC-SP-1.
   3. Surfaces Shop Primed with Alkyd Coatings and Coatings not Conforming to Section 055000:
      a. Machine clean to SSPC SP-3.
      b. Hand tool clean to SSPC SP-2 as required for removal of rust and scaling at difficult to reach locations.

c. Solvent clean free of oil and grease before coating, conforming to SSPC-SP-1.

4. Surfaces Not Previously Shop Primed:
   a. Remove Rust and Scale: Power tool clean and prepare, conforming to SSPC-SP-3. Apply primer when thoroughly dry and before forming of visible rust.
   b. Oil and Grease: Solvent clean, conforming to SSPC-SP-1, before applying finish coat.

E. New Pre-Primed and Prefinished Metals: Solvent clean in accordance with SSPC-SP-1.

F. Uncoated, Ungalvanized Ferrous Metals: Power tool clean and prepare in accordance with SSPC-SP-3. Prime by end of same work day and before forming of visible rust.
   1. Remove oil, grease, and other foreign substances by lacquer thinner, conforming to SSPC SPC-1.
   2. Lightly scuff sand with 120 grit paper to break surface sheen without scratching or scaring surface.

G. Hot-Dipped Galvanized Steel Treatment: Conform to ASTM D6386 for preparation of galvanized surfaces prior to application of primers and other coatings directly to galvanized surfaces.
   1. Newly Galvanized Steel:
      a. Within 48 hours of galvanizing, and before zinc oxide or zinc hydroxide formations on surface, clean surfaces of oil and grease.
      b. Smooth high spots and rough edges by sanding or sweep blasting.
      c. Apply zinc-phosphate treatment or other acceptable adhesion promoter.
   2. Partially weathered Galvanized Steel:
      a. Test for and remove chromatic conversion coatings that may have been applied at factory.
      b. Clean surfaces of oil and grease. Smooth high spots and rough edges by sanding or sweep blasting.
      c. Remove wet storage stain using a mild ammonia solution, rinse with water, and air blow dry.
      d. Apply paint coating within 30 minutes before zinc oxides begin to reform or apply zinc-phosphate treatment or other acceptable adhesion promoter.

H. Zinc Coat Galvanized Ferrous Metal for Dryfall Coatings and Dryfall Paint at Interior Overhead Ceilings:
   1. Rust-Inhibitive, Low-Temperature Cure Dryfall Coatings: No preparation required over dust-free and dry surfaces.
   2. Dryfall Paint (None Rust-Inhibitive): Conform to preparation surface preparation methods including solvent cleaning, test for chromate passivation, and etching cleaner.

I. Gypsum Board Surfaces:
   1. Repair and remove minor irregularities, contaminations, dust, and dirt.
   2. Where surface defects appear after prime coating, repair defects under work of appropriate Section, and reprime over repaired areas.
   3. Do not begin surface preparation on gypsum board, and other gypsum board materials that have been saturated by water. Notify Owner and Architect.

J. Mechanical and Electrical Work: Remove dirt, grease, and oil from metal and insulating coverings.

K. Surfaces Not Specified by MPI, SSPC, or manufacturer's Instructions: Verify with Architect for surface preparation procedures.

3.6 APPLICATION

A. Conform to manufacturer's instructions, MPI Architectural Painting Specification Manual, and provisions of Contract Documents.

B. Minimum Number of Coats: The number of coats specified is the minimum number of coats. Apply additional coats as required when substrate, undercoats, or other conditions show through.

C. Apply painting systems on-site except as otherwise specified.

D. Conform to manufacturer's instructions for wet film and dry film thickness of coatings.
   1. Verify wet film thickness (WFT) by use of wet film gage during application.
   2. Test dry film thickness (DFT) using Tooke or other accepted measuring device.

E. Conform to Premium Grade, including application of two finish coats over prepared and primed substrates.

F. Apply as many additional coats for complete coverage and for acceptable finished appearance, free of holidays and color irregularities.

G. Back-roll, back-brush, and perform other work as necessary to lay down gypsum board fuzz, push spray-applied coatings into surfaces, and to even out and make for smooth, uniform coated surfaces.

H. Apply primer and each finish coat in slightly different hue as means to verify multiple coat coverage.

3.7 PATCHING

A. Repair surfaces damaged during construction activities. Spot repair and refinish as necessary for finished appearance prior to Substantial Completion and Owner occupancy.

3.8 REPLACEMENT OF HARDWARE AND MISCELLANEOUS ITEMS

A. Reinstall items previously removed for painting, including hardware, electrical plates.

3.9 FIELD QUALITY CONTROL

A. Manufacturers Field Services: Conduct field services by manufacturer's local senior technical field representative.
   1. Attend Pre-Construction Conference, view field samples specified in this Section, make intermittent site visits, make final site visit at project completion.
   2. Verify conformance to manufacturer's instructions and provisions of Contract Documents for products and procedures.
   3. Provide technical assistance to help achieve high quality results.
      a. Verify mil thickness with wet film gauge, in selected locations.
      b. Test surfaces with Tooke or approved dry film gauge, for total DFT in selected areas.
   4. Promptly notify Architect of suspected non-conforming work and other irregularities.

3.10 CLEANING

A. As Work proceeds, promptly remove spilled, and splattered paint and coating products so as not to damage surfaces.

B. Maintain premises free from unnecessary accumulation of tools, equipment, surplus materials, and debris.

C. At conclusion of work, thoroughly clean paint and coatings from surfaces not designated to be painted.
   1. Do not scratch or damage surfaces.
   2. Verify chemical compatibility of cleaners to materials to be cleaned.

D. Leave premises neat and clean; free from debris and residue from work of this Section.

E. Do not dump paint, stains, chemicals and clean/wash painting equipment anywhere in the landscaping around the building, site, or property, including the adjoining property.

3.11 PROTECTION
   1. Protect painting work from damage during remainder of construction period. Remove protection at time of Substantial Completion.

3.12 INTERIOR PAINTING SYSTEMS:

A. Concrete Masonry Units:
   1. INT 4.2E-G5: Institutional low odor / low VOC system, semi-gloss finish.
      a. Block Filler: MPI# 4.
      b. Intermediate Coat and Topcoat: MPI #147, Latex, Interior, Institutional Low Odor/VOC, Semi-Gloss, (MPI Gloss Level 5).
      c. Benjamin Moore:
         1) Block Filler: Ultra Spec, Hi-Build Masonry Block Filler, 571/K571
         2) Intermediate Coat and Topcoat: Ultra Spec, Interior Gloss Finish, N540/K540
      d. Dunn-Edwards:

1) Block Filler: One of the following, compatible with topcoats:
   a) Smooth BLOCFIL Select, Interior/Exterior Concrete Block Filler, SBSL00-1
2) Intermediate Coat and Topcoat: One of the following, compatible with block filler:
   a) Everest, Low Odor | Zero VOC Interior Semi-Gloss Paint, EVER50
   b) Colorhouse, Inspired Interior Semi-Gloss, 141315

e. PPG Architectural:
1) Block Filler: One of the following, compatible with topcoats:
   a) Glidden Professional (US), Concrete Coatings Block Filler Interior/Exterior Primer, 3010-1200
   c) Speedhide Int./Ext. Masonry Hi Fill Latex Block Filler, 6-15XI
2) Intermediate Coat and Topcoat: One of the following, compatible with block filler:
   a) Glidden, Diamond Interior Paint + Primer semigloss, GLD7411
   d) Glidden Professional (US), Diamond 450 No VOC Interior Semi-Gloss Paint, 7400N
   e) PPG Diamond Interior Semi-Gloss Paint + Primer, PPG53-510
   f) PPG Pure Performance Zero VOC Interior Semi-gloss, 9-510XI Series
   g) PPG Speedhide Zero Interior Zero VOC Latex Semi-Gloss, 6-4510XI
   h) PPG Wonder Pure Semi-Gloss Interior Latex Enamel, DRP33XX

f. Sherwin-Williams:
1) Block Filler: One of the following, compatible with topcoats:
   a) ConFlex, Block Filler, CF01W0050
   b) Loxon, Acrylic Block Surfacer, A24W00200/LX01W0200
   c) PrepRite, Int/Ext Block Filler, B25W00025
   d) Pro Industrial, Heavy Duty Block Filler, B42W00150
2) Intermediate Coat and Topcoat: One of the following, compatible with block filler:
   a) Emerald, Interior Acrylic Latex Semi-Gloss, K38W00351
   b) Pro Industrial, Acrylic Semi-Gloss Coating, B66W00651

B. Steel, Non-Galvanized: (e.g. misc. metal fabrications, and inside of fire extinguisher cabinets painted to match walls, columns, beams, joists, stage rigging system (semi-gloss black paint))
1. INT 5.1S-G3: Institutional low odor / low VOC system, eggshell finish.
   a. System Description:
      1) Primer (2 coats): MPI #107 - Rust Inhibitive Primer, W.B.
      2) Intermediate Coat and Topcoat: MPI #145 - Latex, Interior, Institutional Low Odor/VOC, (MPI Gloss Level 3).
   b. Benjamin Moore:
      1) Primer: Ultra Spec HP, Acrylic Metal Primer, HP04/FP04
      2) Intermediate Coat and Topcoat: Ultra Spec 500, Interior Eggshell, N538/K538
   c. Dunn-Edwards:
      1) Primer: ENDURAPRIME, Interior /Exterior Acrylic Rust Preventative Metal Primer, ENPR00
      2) Intermediate Coat and Topcoat: Colorhouse Inspired Interior Eggshell, 141216
   d. PPG Paints:
      1) Prime Coat: Pitt-Tech Int/Ext DTM Industrial Primer, 90-712
      2) Intermediate Coat and Topcoat: Speedhide zero Interior Latex Satin, 6-4410XI Series (requires up-to-date MPI #145 listing or acceptable independent third party test report)
   e. Sherwin-Williams:
      1) Primer: Pro Industrial, Pro-Cryl Universal Primer, B66W01310
      2) Intermediate Coat and Topcoat: One of the following, compatible with primer:
         a) ProMar 200 HP Zero VOC, Interior Acrylic Eg-Shel, B20W01951
         b) ProTech, Interior Eggshell Paint, C132

C. Galvanized Metal: (e.g. Entirely interior steel doors and frames, railings, misc. steel, pipes, overhead decking, ducts, etc.)
1. INT 5.3N-G5: Institutional low odor / low VOC semi-gloss finish.
   a. System Description:
      1) Primer: MPI #134, Primer - Galvanized, Water Based

2) Intermediate Coat and Topcoat: MPI #147 - Latex, Interior, Institutional Low Odor/VOC, Semi-Gloss (MPI Gloss Level 5).

b. Benjamin Moore:
1) Primer: Ultra Spec HP, Acrylic Metal Primer, HP04/FP04
2) Intermediate Coat and Topcoat: Ultra Spec, Interior Gloss Finish, N540/K540

c. Dunn-Edwards:
1) Primer: Ultra-Grip Premium, Interior/Exterior Multi-Purpose Primer, UGPR00-1
2) Intermediate Coat and Topcoat: One of the following, compatible with primer:
i) Everest, Low Odor | Zero VOC Interior Semi-Gloss Paint, EVER50
j) Colorhouse, Inspired Interior Semi-Gloss, 141315

d. PPG Architectural:
1) Primer: High Performance Coatings, Pitt-Tech Plus 4020 PF / Devflex 4020 PF, 4020 1000
2) Intermediate Coat and Topcoat: One of the following, compatible with primer:
a) Glidden, Diamond Interior Paint + Primer semigloss, GLD7411
b) Glidden Professional (US), Diamond 450 No VOC Interior Semi-Gloss Paint, 7400N
c) PPG Diamond Interior Semi-Gloss Paint + Primer, PPG53-510
d) PPG Pure Performance Zero VOC Interior Semi-gloss, 9-510XI Series
e) PPG Speedhide Zero Interior Zero VOC Latex Semi-Gloss, 6-4510XI
f) PPG Wonder Pure Semi-Gloss Interior Latex Enamel, DRP33XX

e. Sherwin-Williams:
1) Primer as recommended by manufacturer.
2) Intermediate Coat and Topcoat: One of the following, compatible with primer:
a) Emerald, Interior Acrylic Latex Semi-Gloss, K38W00351
b) Pro Industrial, Acrylic Semi-Gloss Coating, B66W00651

D. Gypsum Board:
1. INT 9.2M-G2: Institutional Low Odor / Low VOC (over low odor, low VOC primer) velvet/low-sheen finish (gypsum ceilings and soffits).
a. System Description:
1) Primer: MPI #149 - Primer Sealer, Interior, Institutional Low Odor/VOC.
2) Intermediate Coat and Topcoat: MPI #144 - Latex, Interior, Institutional Low Odor/VOC, (MPI Gloss Level 2).

b. Benjamin Moore:
1) Primer: Ultra Spec 500, Waterborne Interior Primer, N534/K534
2) Intermediate Coat and Topcoat: Ultra Spec 500, Interior Eggshell, N537/K537

c. PPG Paints:
1) Primer: One of the following, compatible with topcoats:
a) Glidden Professional (US), Lifemaster No VOC Interior Primer, 9116
b) PPG Paints, Pure Performance Interior Latex Primer, 9-900
2) Intermediate Coat and Topcoat: One of the following, compatible with primer:
a) Glidden Professional (US), Diamond Interior Paint + Primer Flat Enamel, GLD7111
b) Glidden Professional (US), Lifemaster No VOC Interior Eggshell Paint, 9300
c) PPG Paints, Pure Performance Interior Eggshell Latex, 9-300XI

d. Sherwin-Williams:
1) Primer: One of the following, compatible with topcoats:
a) Harmony, Interior Latex Primer, B11W01500
b) ProMar 200 Zero, Interior Latex Primer, B28W02600/B28WQ2600
2) Intermediate Coat and Topcoat: One of the following, compatible with primer:
a) Harmony, Interior Acrylic Latex Eg-Shel, B09W01051
b) ProMar 200 HP Zero VOC, Interior Acrylic Low Gloss Eg-Shel, B41W01951

2. INT 9.2M-G3: Institutional Low Odor / Low VOC (over low odor, low VOC primer) Gloss Level 3 eggshell finish (gypsum walls).
a. System Description:
1) Primer: MPI #149 - Primer Sealer, Interior, Institutional Low Odor/VOC.
2) Intermediate Coat and Topcoat: MPI #145 - Latex, Interior, Institutional Low Odor/VOC, (MPI Gloss Level 3).

b. Benjamin Moore:
   1) Primer: One of the following, compatible with topcoats:
      a) Eco Spec WB, Interior Latex Primer, N372/F372
      b) Fresh Start, Natura Waterborne Interior Primer, 511/K511
      c) Ultra-Spec 500, Waterborne Interior Primer, N534/K534
   2) Intermediate Coat and Topcoat: Ultra Spec 500, Interior Eggshell, N538/K538
c. Dunn-Edwards:
   1) Primer: Colorhouse, Inspired Interior Multi-Purpose Primer, 140516
   2) Intermediate Coat and Topcoat: Colorhouse, Inspired Interior Eggshell, 141216
d. PPG Paints:
   1) Primer: PPG Paints, Speedhide Zero Interior Zero VOC Latex Sealer, 6-4900XI
   2) Intermediate Coat and Topcoat: Speedhide zero Interior Latex Satin, 6-4410XI Series (requires up-to-date MPI #145 listing) or acceptable independent third party test report.
e. Sherwin-Williams:
   1) Primer: One of the following, compatible with topcoats:
      a) ProMar 200 Zero, Interior Latex Primer, B28W02600/B28WQ2600
      b) ProTech, Interior Latex Primer, C153
   2) Intermediate Coat and Topcoat: One of the following, compatible with primer:
      a) ProMar 200 HP Zero VOC, Interior Acrylic Eg-Shel, B20W01951
      b) ProTech, Interior Eggshell Paint, C132

3.13 MECHANICAL/ELECTRICAL EQUIPMENT AND RELATED SURFACES:

A. Unless otherwise specified or noted, paint all unfinished conduits, piping, hangers, ductwork and other mechanical and electrical equipment with color and texture to match adjacent surfaces, in the following areas:
   1. Where exposed-to-view in all exterior and interior areas.
   2. In all interior high humidity areas.
   3. In all boiler room, mechanical and electrical rooms.

B. In unfinished areas leave exposed conduits, piping, hangers, ductwork and other mechanical and electrical equipment in original finish and touch up scratches and marks.

C. Touch up scratches and marks on factory painted finishes and equipment with paint as supplied by manufacturer of equipment.

D. Do not paint over nameplates.

E. Paint the inside of all ductwork where visible behind louvers, grilles and diffusers for a minimum of 18 inches or beyond sight line, whichever is greater, with primer and one coat of matt black (non-reflecting) paint.

F. Paint the inside of light valances gloss white.

G. Paint disconnect switches for fire alarm system and exit light systems in red enamel.

H. Paint red or band all fire protection piping and sprinkler lines in accordance with mechanical specification requirements. Keep sprinkler heads free of paint.

I. Paint yellow or band all natural gas piping in accordance with mechanical specification requirements.

J. Backprime and paint face and edges of plywood service panels for telephone and electrical equipment before installation gray, semi-gloss. Leave equipment in original finish except for touch-up as required, and paint conduits, mounting accessories and other unfinished items.

END OF SECTION

THIS PAGE INTENTIONALLY LEFT BLANK

SECTION 101423 - PANEL SIGNAGE

PART 1 - GENERAL

1.1 SUBMITTALS

A. Shop Drawings: Full scale drawings for each sign type, illustrating construction, dimensions, and kerning of text and Braille.

B. Product Data: Published descriptive data indicating materials, signage fabrication, and limitations.

C. Samples: One full size sample of each sign type specified in colors selected by Architect.

D. Manufacturer's Installation Instructions.

1.2 QUALITY ASSURANCE

A. Manufacturer/Fabricator Qualifications:
   1. Company specializing in work of this Section with minimum 10 years' experience manufacturing commercial quality signs of comparable type and scope as work of this Project.
   2. Maintain sufficient production capacity to product signs in timely manner to meet construction schedule.

B. Single Source Responsibility: Provide plastic signs by or under responsibility of single manufacturer or fabricator.

PART 2 - PRODUCTS

2.1 MANUFACTURERS

A. Manufacturers: Provide products from one of the following, or approved substitution.
   1. Advance Corp, Braille-Tac Division.
   2. APCO Graphics, Inc.
   3. ASI Sign Systems, Inc.
   4. Best Sign Systems Inc.
   5. Gemini Inc.
   6. Inpro Corp.; Inpro Architectural Products
   7. Mohawk Sign Systems
   8. Tablet & Ticket Co.

B. Approved Substitutions: Architect-approved equal products submitted as specified for substitutions.

2.2 REGULATORY REQUIREMENTS

A. Conform to requirements of regulatory agencies.

B. Accessibility Requirements: Conform with US DOT requirements, ADA, ANSI A117.1, and requirements of authorities having jurisdiction.

2.3 MATERIALS

A. Blast-Etched Melamine Panel Signage Materials:
   1. Melamine Laminate: High wear melamine resin impregnated surface papers, bonded under heat and pressure to phenolic resin impregnated kraft papers.
      a. Resistant to abrasion, stains, solvents, and heat.
      b. Exceed performance characteristic of NEMA LD 3-1995.
      c. Non-glare matte finish.
      d. Available in solid or decorative colors.
   2. Acrylic Sheet: Cast methyl methacrylate non-glare acrylic sheet.
   3. Clear Polycarbonate Sheet: Lexan, polycarbonate thermoplastic resin.

B. Engraved Plastic Panel Signage Materials:
   1. Engraving Plastic: High impact acrylic, matte, engraving plastic. Two-ply factory laminated with clear lamination over integral colored lamination, 1/8 inch thick, UV stable (suitable for outdoor use), fire-retardant.
   2. Acrylic Sheet: Cast methyl methacrylate non-glare acrylic sheet.
   3. Appliqué Plastic for Tactile Text and Numbers: Modified acrylic, integral color throughout, adhesive backed, 1/32 inch thick.
   4. Braille: Complying with accessibility requirements.

2.4 FABRICATION

A. Conform to ICC A117.1 and provisions of Contract Documents for material, thickness, finish, color, design, shape, size, and details of construction.

B. Blast-Etched Melamine Panel Signage:
   1. Melamine Plate: Computer numerical control (CNC) cut, radius corners.
   2. Masking Material: CNC cut.
   3. Blast-Etched Process: Etch or sand-blast background to 1/32 inch depth leaving text, symbols, grade 2 Braille, and borders integral and monolithic with sign plate.
   4. Sign Face: One-piece construction.

C. Engraved Plastic Panel Signage:
   1. Engraving plastic with tactile text and Braille, conforming to ICC A117.1.
   2. ADA Compliant Tactile Text and Pictograms:
      a. 1/32 inch raised text on engraving plastic.
      b. Colored appliqué plastic, adhesive or chemically applied to engraving plastic, and rotary engraved.
         1) Edges: Smooth, slightly beveled, free of burrs and flaws.
         2) Corners: Radius sharp and precise.
         3) Text: Aligned and evenly spaced.
   3. Tactile Braille:
      a. Raised 1/32 inch, on engraving plastic.
      b. Mechanically and adhesively set into engraving plastic.
      c. Match Braille message to tactile sign text.

D. Permanent Non-Tactile Text, Graphics, and Illustrations (Directional and informational signs not required to be tactile such as maximum occupant load signs):
   1. Reverse Engraved Signage: Reverse engrave through colored engraving plastic back ply and back paint text color so that image appears through clear face ply.
   2. Silk-screened Signage: Apply silkscreen color to back ply of clear acrylic sheets. Apply text either subsurface or colored appliqué over silkscreen.

E. Window Slots for Temporary Non-Tactile Text on Paper:
   1. Sign Field: Acrylic sheet, silkscreened on backside.
   2. Window: Clear acrylic.
   3. Paper Insert: Size and depth sufficient to fit Owner supplied text message on 65-80 pound slip-in paper card stock.

F. Margins and Justification: Center justified, evenly spaced, and as shown on Drawings.

2.5 LETTERS AND NUMBERS

A. Conform to ADA, ANSI A117.1, and provisions of Contract Documents.

B. Font: Helvetica Medium.

C. Font Size:
   1. Text Letters: 5/8 inch minimum to 2 inch high maximum.
   2. Room Numbers: As indicated on Drawings. Minimum 1-1/2 inch high.

D. Font Width to Height Ratio: Between 3:5 and 1:1 width to height ratio and between 1:5 and 1:10 stroke width to height ratio, conforming to ADA and ANSI A117.1.

E. Font Case:
   1. Tactile Text: Upper case.
   2. Non-Tactile Text: Lower case with initial capitals.

F. Sign Width to Height Ratio: Stack letters as necessary to optimize height to width ratio and to fit location space on walls and doors.

2.6 PICTOGRAMS

A. Accompany with equivalent verbal description placed directly below pictogram.

B. Dimension of Pictogram: Minimum 6 inches high.

C. Face International Symbol of Access to the right.

2.7 ACCESSORIES

A. Double Backed Tape: 3M Structural Adhesive Tape, or as instructed by manufacturer for best results.

B. Backer Plates for Mounting Signs on Glass: Same size and color as sign, for mounting on reverse side of glass.

C. Fasteners:
   1. Screws: Self-tapping, square drive or spanner drive, pan head, #8 screws with black oxide finish.
   2. Anchors: Alligator Solid Wall Anchor, Toggler Anchor System, AF6-1/4 inch, specified for type and quality.

D. Adhesive: Neutral cure silicone, as instructed by manufacturer.

E. Other: As necessary for secure and permanent mounting, including mounting to non-uniform surfaces, and as instructed by manufacturer.

2.8 FINISH AND COLOR

A. Signage Finish: Smooth, non-glare, matte texture.

B. International Symbol of Access Signs: White letters and blue field, conforming to accessibility requirements.

C. Other Signs: As directed by Architect.

D. Raster Braille: Clear.

E. Blasted Braille: Same color as letters.

F. Color Contrast: US DOT FHWA Color Tolerance Chart Guidelines, minimum 70 percent between field surfaces and letters and pictograms.

PART 3 - EXECUTION

3.1 INSTALLATION

A. Conform to manufacturer's instructions, ADA, ANSI A117.1, and provisions of Contract Documents.

B. Mounting Location and Height of Signs: As shown on Drawings and as required by Code and Building Department. Where not shown, mount on wall adjacent to latch side of door, 60 inches above finished floor to the centerline of the sign, and 3 inches from door. At double leaf doors mount sign at nearest adjacent wall.

C. Assume reasonable adjustment of location as part of basic work, at no additional cost.

D. Install level, plumb, securely mounted, and in alignment with adjacent signs and construction.

E. Cooperate with work of other Sections to schedule installation of sign units to finish surfaces.

F. Mount signs with double backed adhesive tape or silicone adhesive on glass. Mount backer plates on opposite side of glass, aligned with signs.

G. Mechanically mount signs with exposed fasteners with square head drives.
   1. Secure at each corner of plastic signs through factory drilled holes.
   2. Notify Architect where substrate is unsuitable for secure and permanent attachment.

H. Occupant Load Signs: Locate over each door of rooms having occupant load of 50 or more and as shown on Drawings. Install in same manner as plastic signs.

END OF SECTION

SECTION 102613 - CORNER GUARDS

PART 1 - GENERAL

1.1 SUBMITTALS

A. Product Data: Indicate dimensions, configurations, mounting brackets, closure caps, and anchorage details.

B. Sample Corner Guard: Illustrate component design, color, finish, and configuration in 6 inch minimum length

C. Manufacturer Installation Instructions: Include rough-in and mounting requirements.

PART 2 - PRODUCTS

2.1 STAINLESS STEEL CORNER GUARDS

A. ASTM A666, type 304, 16 gauge stainless steel, 3-1/2 inch by 3-1/2 inch, 1/8 inch radius edge, 90 degree corners. Provide in lengths to extend full height from finish flooring to butt underside of ceiling; except, at walls having chair rails, extend from finish flooring to underside of rail.

B. Adhesive, Fasteners and Accessories: As instructed by manufacturer for installation.

C. Products: Provide one of the following, or Architect-accepted substitution:
   1. The C/S Group, CO-8.
   2. Pawling Corporation, Pro-Tek CG-50.
   3. Koroseal, Stainless Steel
   4. Balco, Inc., Stainless Steel.
   5. InPro Corporation, 180.

2.2 FINISHES

A. Stainless Steel Corner Guards: No. 4 brushed satin finish.

PART 3 - EXECUTION

3.1 INSTALLATION

A. Conform to manufacturer's instructions and provisions of Contract Documents.

B. Make installations level, plumb, and rigidly in place.

C. Stainless Steel Corner Guards: Attach with mechanical fasteners.

D. Position corner guards to butt against finished floor and underside of ceiling, except at walls with chair rails, butt to underside of chair rail.

E. Position corner guards 1/4 inch above resilient base, for approximately 4-1/2 inch above finished floor.

END OF SECTION

THIS PAGE INTENTIONALLY LEFT BLANK

SECTION 102813 - TOILET ACCESSORIES

PART 1 - GENERAL

1.1 SUBMITTALS

A. Product Data: Indicate physical characteristics and limitations for each product item. Include configurations, materials, gauges, dimensions, options, and finishes.

B. Manufacturer's Instructions: Installation instructions, diagrams, templates, setting drawings, special procedures, and conditions requiring special attention.

1.2 WARRANTIES

A. Mirrors: Standard 10 year Warranty against silver spoilage of mirror glass.

B. Hand Dryers: Standard 3 year on brushes and 10 year limited parts Warranty.

PART 2 - PRODUCTS

2.1 MANUFACTURERS

A. Basis of Design Products: Provide products specified, or Architect-accepted substitution complying with Section 012500:
   1. American Specialties, Inc. (ASI)
   2. Bobrick Washroom Equipment, Inc.
   3. Bradley Corp.
   4. World Dryer.

2.2 REGULATORY REQUIREMENTS

A. Accessibility Requirements: Conform to Chapter 11 of Building Code, ICI /ANSI A117.1, and provisions of regulatory authority having jurisdiction.

2.3 MATERIALS

A. Stainless steel: Type-304, Satin No. 4 finish.

B. Phenolic: Solid phenolic with matte finish, melamine surfaces and black phenolic resin core.

C. Aluminum: Heavy duty cast aluminum, satin finish.

D. Mounting Devices: Manufacturer's standard, concealed or tamperproof.

2.4 PUBLIC USE TOILET ACCESSORIES PRODUCTS

A. Paper Towel (Roll) Dispensers:
   1. Product: Subject to compliance with requirements, provide the Basis-of-Design product indicated, or comparable product approved by Architect from one of the following:
      a. A & J Washroom Accessories, Inc.
      b. American Specialties, Inc.
      c. Bradley Corporation.
      d. Bobrick; B-72860 (Basis-of-Design).
   2. Description: Touch-free pull towel dispensing mechanism dispenses one 12-inch length of towel per pull and operates smoothly and quietly, and dispenses with less than 5 pounds of force to comply with barrier-free accessibility guidelines (including ADAAG).
   3. Mounting: Surface mounted.
   4. Minimum Capacity: Accommodates up to 3-1/2 inch diameter stub roll with automatic transfer to full roll.
   5. Material and Finish: ABS plastic, gray.
   6. Lockset: Keyed lock.

B. Waste Receptacles:
   1. Product: Subject to compliance with requirements, provide the Basis-of-Design product indicated, or comparable product approved by Architect from one of the following:
      a. A & J Washroom Accessories, Inc.
      b. American Specialties, Inc.
      c. Bradley Corporation.
      d. Bobrick; B-277 (Basis-of-Design).
   2. Mounting: Surface mounted.
   3. Minimum Capacity: Insert 12.7 gal..
   4. Material and Finish: Stainless steel, No. 4 finish (satin).
   5. Liner: Molded plastic sleeve.

C. Liquid-Soap Dispensers, Wall-Mounted:
   1. Product: Subject to compliance with requirements, provide the Basis-of-Design product indicated, or comparable product approved by Architect from one of the following:
      a. A & J Washroom Accessories, Inc.
      b. American Specialties, Inc.
      c. Bradley Corporation.
      d. Bobrick; B-155 (Basis-of-Design).
   2. Description: Designed for dispensing soap in liquid or lotion form.
   3. Mounting: Vertical-surface mounted.
   4. Capacity: 24 oz..
   5. Materials: Translucent polyethylene container on bright polished chrome-plated ABS mounting bracket.
   6. Lockset: Tumbler type.

D. Liquid-Soap Dispensers, Counter-Mounted:
   1. Product: Subject to compliance with requirements, provide the Basis-of-Design product indicated, or comparable product approved by Architect from one of the following:
      a. A & J Washroom Accessories, Inc.
      b. American Specialties, Inc.
      c. Bradley Corporation.
      d. Bobrick; B-822 (Basis-of-Design).
   2. Description: Designed for dispensing soap in liquid or lotion form.
   3. Mounting: Deck mounted on lavatory.
   4. Capacity: 34 oz..
   5. Materials: Stainless steel, bright polished finish piston and spout, chrome-plated high-impact-resistant ABS escutcheon, and high-impact-resistant plastic body and shank.
   6. Vandal-resistant spout can rotate 360 degrees without damage to unit. Escutcheon locks to body with concealed locking mechanism controlled with special key provided.

E. Grab Bars:
   1. Products: Subject to compliance with requirements, provide the Basis-of-Design product indicated, or comparable product approved by Architect from one of the following:
      a. A & J Washroom Accessories, Inc.
      b. American Specialties, Inc.
      c. Bradley Corporation.
      d. Bobrick; B-5806 Series (Basis-of-Design).
   2. Mounting: Flanges with concealed fasteners.
      a. Flanges: 11 gauge thickness.
      b. Tubes: 18 gauge thickness.
      c. Closure Plates: 11 gauge thickness.
      d. Material and Finish: Stainless steel, smooth, No. 4 finish (satin).
   3. Outside Diameter: 1-1/4 inches.
   4. Configuration and Length: As indicated on Drawings.

F. Sanitary-Napkin Disposal Units:

1. Product: Subject to compliance with requirements, provide the Basis-of-Design product indicated, or comparable product approved by Architect from one of the following:
    a. A & J Washroom Accessories, Inc.
    b. American Specialties, Inc.
    c. Bradley Corporation.
    d. Bobrick; B-270 (Basis-of-Design).
2. Mounting: Surface mounted.
3. Door or Cover: Self-closing, disposal-opening cover and hinged face panel with tumbler lockset.
4. Receptacle: Removable.
5. Material and Finish: Stainless steel, No. 4 finish (satin).

G. Mirror Units:
1. Product: Subject to compliance with requirements, provide the Basis-of-Design product indicated, or comparable product approved by Architect from one of the following:
    a. A & J Washroom Accessories, Inc.
    b. American Specialties, Inc.
    c. Bradley Corporation.
    d. Bobrick; B-1658 (Basis-of-Design).
2. Frame: Type 430 stainless-steel channel.
    a. Corners: Mitered and mechanically interlocked.
3. Hangers: Produce rigid, tamper- and theft-resistant installation, using method indicated below.
    a. One-piece, galvanized-steel, wall-hanger device with spring-action locking mechanism to hold mirror unit in position with no exposed screws or bolts.
4. Size: 24 inches by 36 inches.

H. Diaper-Changing Stations:
1. Basis-of-Design Product: Subject to compliance with requirements, provide product indicated below, or approved comparable product from one of the following:
    a. American Specialties, Inc.
    b. GAMCO Specialty Accessories.
    c. Koala Kare Products; a division of Bobrick Washroom Equipment, Inc; KB110-SSWM (Basis-of-Design).
2. Description: Horizontal unit that opens by folding down from stored position and with child-protection strap.
    a. Engineered to support a minimum of 400-lb static load when opened.
3. Mounting: Surface mounted, with unit projecting not more than 4 inches from wall when closed.
4. Operation: By pneumatic shock-absorbing mechanism.
5. Material and Finish: Stainless steel, No. 4 finish (satin), with replaceable insulated polystyrene tray liner and rounded plastic corners.
6. Liner Dispenser: Built in.

I. Electric Hand Dryers:
1. Hand Dryers: Surface mounted, automatic electronic/no touch sensor and drying cycle, 115V AC, 20 Amp, cast iron cover with vitreous enamel finish in color as approved from manufacturer's standard line.
    a. Notes:
        1) Nozzle is to be in fixed position and not adjustable for hair drying.
        2) Mounting at maximum 38 inch above floor to meet accessibility requirements.
    b. Bobrick No. B-7007, AirCraft Series.
    c. World Dryer, AirMax Series XM.

J. Clothes Hooks:
1. Robe/Clothes Hook: One piece brass casting with satin nickel plated finish, concealed mounted with 2 sheet metal screws, theft resistant mounting able to resist 300 pound load.
    a. Bobrick B-2116
    b. ASI 0751
    c. Bradley 9119

2.5 UNDERLAVATORY GUARDS

A. Manufacturers: Provide products from one of the following, or Architect-accepted substitution complying with Section 012500:
   1. IPS Corporation.
   2. Plumberex Specialty Products, Inc.
   3. Truebro by IPS Corporation.
   4. Description: Insulating pipe covering for supply and drain piping assemblies that prevent direct contact with and burns from piping; allow service access without removing coverings.
   5. Material and Finish: Antimicrobial, molded plastic, white.

2.6 PRIVATE USE TOILET ACCESSORIES PRODUCTS

A. Subject to compliance with requirements, provide the following, or comparable products approved by Architect:
   1. Towel Bar: Delta Faucet Co. Traditional, 24 inch, Model #74024.
   2. Towel Bar: Delta Faucet Co. Traditional, 18 inch, Model #74018.
   3. Toilet Tissue Holder: Delta Faucet Co. Traditional, Model #74050.
   4. Robe Hook: Delta Faucet Co. Traditional D-Double, Model #74036.

2.7 JANITOR CLOSET EQUIPMENT

A. Shelf with Mop and Broom Holders and Hooks: 18 gauge satin finished shelf stainless steel shelf, 3 anti-slip mop holders with spring loaded rubber cams to grip 7/8 inch to 1-1/4 inch diameter handles, and 4 stainless steel hooks. 34 inch wide.
   1. Bobrick B-239x34
   2. ASI 1308x44
   3. Bradley 9934

B. Stainless Steel Shelf: 18 gauge satin finished stainless steel shelf, 18 inch standard length 6 inch wide with mounting brackets welded to shelf for surface mounted installation with round head stainless steel screws.
   1. Bobrick B-296X18
   2. ASI 0692-618
   3. Bradley 756-18

2.8 ACCESSORIES

A. Provide mounting hardware, concealed wall plates, stainless steel lock screws, and hardware as needed for installations.

2.9 FABRICATION

A. Construct accessories of stainless steel, unless otherwise specified.

B. Locking Hardware: Key alike to other toilet equipment.

C. Templates and Concealed Anchor Plates: Furnish to applicable trades as required for each accessory together with location and mounting height.

D. Backing: Establish required backing for installations under work of Section 061000. Design grab bars for 300 pound minimum load.

2.10 FINISHES

A. Stainless steel with brushed satin finish, unless otherwise indicated.

B. Phenolic: Ivory-colored face sheets.

PART 3 - EXECUTION

3.1 INSTALLATION

A. Conform to manufacturer's instructions and provisions of Contract Documents.

B. Install in accordance to Drawings for mounting heights, locations, and sizes not indicated. Where not given, locate as directed by Architect.

C. Secure equipment with concealed fasteners into solid framing or backing at walls and partitions at toilet compartments. Where exposed fasteners are required secure with tamperproof heads.

D. Grab Bars: Install on specified concealed anchor plate welded or screwed with self-threading screws to studs. Meet structural strength requirements for 300 pound minimum bending stress, shear stress, shear force, and tensile force.

E. Mirrors: Install to concealed wall hanger with theft resistant mounting screwed into blocking or backing at stud walls with manufacturer's approved fasteners. No visible fasteners permitted.

F. Hand Dryers: Mechanically fasten into backing support at walls. Coordinate with Division 26 - Electrical.

G. Other Items including OFCI items: Install in accordance to manufacturer's instructions with approved concealed fasteners into backing support at walls, to toilet partitions, and as indicated or required to complete installations.

END OF SECTION

THIS PAGE INTENTIONALLY LEFT BLANK

SECTION 104413 - FIRE PROTECTION CABINETS

PART 1 - GENERAL

1.1 SUBMITTALS

A. Shop Drawings: Include locations and details. Include recessed and semi-recessed installation requirements to maintain fire-resistive wall construction.

B. Product Data:
   1. Cabinets: Include dimensions, rough-in measurements, physical characteristics, and accommodations for fire extinguisher types and sizes, and recessed and semi-recessed installation requirements to maintain fire-resistive wall construction.

PART 2 - PRODUCTS

2.1 MANUFACTURERS

A. Products: Provide the products specified, or approved substitution. Fire protection cabinet products include but are not limited to:
   1. Larsen's Manufacturing Co.
   2. J.L. Industries, a division of Activar Construction Products Group
   3. Potter Roemer.

B. Approved Substitutions: Architect-approved equal products submitted in conformance with provisions specified for substitutions.

2.2 REGULATORY REQUIREMENTS

A. Accessibility Requirements: Conform ANSI A117.1, and provisions of regulatory authority having jurisdiction.

B. Fire-Rated Cabinets:
   1. Conform to IBC for cabinet construction and installation to maintain fire resistive construction per cabinet manufacturers published fire rated assembly.
   2. Intertek or UL labeled for rated construction as indicated.

2.3 FIRE PROTECTION CABINETS

A. Before ordering, confirm compatible sizes of cabinets specified in this Section and fire extinguishers specified in Section 104416.

B. Cabinet with Stainless Steel Trim and Door: J.L. Industries, Cosmopolitan Series.
   1. Cabinet Style: Semi-recessed.
   2. Tub (Recessed and Semi-recessed Cabinets): Cold-rolled steel.
      a. Finish: Factory-applied powder coat paint finish.
      b. Standard Color: White.
   3. Tub: Stainless steel; #4 directional satin finish.
   4. Door and Trim Construction: Stainless steel; flush doors with 5/8 inch (15.88 mm) door stop attached by continuous hinge and equipped with black ABS recessed pull with roller catch.
      a. Finish: Factory-applied ground and polished #4 directional satin finish.
   5. Trim Style and Depth:
      a. Semi-Recessed Cabinet: Rolled Edge.
      b. Trim Dimensions: 1-3/4 inch (44.45 mm) face trim on frame and 1-1/4 inch (31.75 mm) face trim on door.
   6. Fire-Rating: Match wall system.

2.4 FIRE EXTINGUISHER CABINETS FABRICATION

A. Fabricate to install into 3-1/2 inch deep stud space and to accommodate fire extinguisher sizes specified.

B. Door Design: Flush face, full glass view window, and vertical black letters, FIRE EXTINGUISHER, on clear glass.

C. Glazing: 1/4 inch clear tempered glass.

D. Box Construction: Cold-rolled steel, double wall construction, fire-resistive core material at fire rated walls.

E. Semi-Recessed: 2-1/2 inch rolled edge trim.

F. Pull Handle: Steel cam lock design permitting opening of cabinet door by pulling sharply on handle.

G. Hinge: Continuous piano hinge.

2.5 FINISH

A. Cabinet Frame and Inside of Box: Manufacturer's standard baked white acrylic enamel.

B. Cabinet Trim and Door: Stainless steel with #4 finish.

C. Hardware: Zinc plated steel, satin finish.

PART 3 - EXECUTION

3.1 INSTALLATION

A. Install in accordance with manufacturer's instructions and provisions of Contract Documents.

B. Anchor cabinets firmly into solid bearing, set plumb and square to adjacent materials.

C. Mounting Height: Limit top of cabinets to maximum 60 inch above the floor.

END OF SECTION

SECTION 104416 - FIRE EXTINGUISHERS

PART 1 - GENERAL

1.1 SUBMITTALS

A. Product Data:
   1. Extinguishers: Materials description for fire extinguishers; include ratings and classifications.
   2. Installation instructions for each product specified.

B. Shop Drawings:
   1. Small-scale plans showing locations of fire extinguisher cabinets and individual fire extinguishers.
   2. Schedules showing each type of cabinet and extinguisher to ensure proper fit and function.
   3. Indicate installation procedures and accessories required for a complete installation.
      a. Size: 6 inches square.

C. Warranty: Sample of special warranty.

1.2 QUALITY ASSURANCE

A. Comply with the following:
   1. ASTM E814 - Standard Test Method for Fire Tests of Penetration Firestop Systems.
   2. NFPA 10 - Standard for Portable Fire Extinguishers.

B. Comply with the following:
   1. ASTM E814 - Standard Test Method for Fire Tests of Penetration Firestop Systems.
   2. NFPA 10 - Standard for Portable Fire Extinguishers.

C. Comply with standards referenced in Article "REFERENCE STANDARDS".

D. Single Source: Provide components and materials specified in this Section and Section 104413 under a single manufacturer's responsibility, and installation under a single installer.

E. Testing Agency Qualifications: Provide products tested and listed by UL or another independent third-party testing agency, as acceptable to state and local authorities having jurisdiction.

1.3 WARRANTY

A. Manufacturer's Warranty: Standard warranty in which manufacturer warrants fire extinguishers provided, against defects in material and workmanship under conditions of normal use.
   1. Warranty Period: 6 years.

PART 2 - PRODUCTS

2.1 MANUFACTURERS

A. Manufacturers: Provide products from one of the following, or approved substitution. Manufacturers of fire extinguishers include but are not limited to:
   1. Amerex Corp.
   2. Guardian Fire Equipment, Inc.
   3. JL Industries, Inc., a division of Activar Construction Products Group
   4. Larsen's Manufacturing Co.

B. Approved Substitutions: Architect-approved equal products submitted in conformance with provisions specified for substitutions.

2.2 REGULATORY REQUIREMENTS

A. Accessibility Requirements: Conform to IBC Accessibility requirements, ICI/ANS A117.1, and provisions of regulatory authority having jurisdiction.

B. Comply with NFPA 10 - Standard for Portable Fire Extinguishers.

2.3 FIRE EXTINGUISHERS

A. Before ordering, confirm compatible sizes of fire extinguishers specified in this Section and cabinets specified in Section 104413.

B. Multi-Purpose Dry Chemical Type: Extinguisher unit containing a fluidized and siliconized mono ammonium phosphate powder; nonconductive and nontoxic.
   1. Construction: Heavy duty steel cylinder with metal valve and siphon tube, O-ring seal, replaceable valve stem seal, visual pressure gage, pull pin and upright squeeze grip.
   2. Finish: Factory powder-coated; Red.
   3. UL Rating and Capacity: 4A-60BC or greater, 10 lb. minimum.

2.4 MOUNTING BRACKETS

A. Provide manufacturer's standard steel bracket, designed to secure fire extinguisher to wall or structure, of sizes required for types and capacities of fire extinguishers indicated.

2.5 SOURCE QUALITY CONTROL

A. Ship extinguishers to the Project site fully charged.

PART 3 - EXECUTION

3.1 INSTALLATION

A. Install cabinets in locations and at mounting heights indicated, or if not indicated, at heights to comply with applicable regulations of governing authorities.
   1. Prepare recesses in walls for fire extinguisher cabinets as required by type and size of cabinet and style of trim and to comply with manufacturer's instructions.
   2. Securely fasten mounting brackets and fire extinguisher cabinets to structure, square and plumb, to comply with manufacturer's instructions.
   3. Maintain fire ratings where cabinets are recessed into fire-rated wall systems.

B. Wall Signs:
   1. Location: Where shown or directed.
   2. Apply on walls after field painting is completed and has been accepted.

3.2 FIELD QUALITY CONTROL

A. Ensure that each extinguisher is fully charged, and that inspection of each extinguisher has been performed, as evidenced by the National Association of Fire Equipment Distributors certification tag, just prior to turnover.

END OF SECTION

SECTION 105500 - POSTAL SPECIALTIES

PART 1 - GENERAL

1.1 SUBMITTALS

A. Shop Drawings:
1. Include plans, elevations, sections, details, and attachments to other work. Include field measurements.
2. Indicate locations, construction and anchorage details, dimensions, rough-in openings sizes, quantity, and arrangement of box sizes.
3. Include identification sequence for compartments.
4. Include layout of identification text.

B. Product Data: Manufacturer's printed descriptive data including drawings or photos, and dimensions.

C. Samples: For each type of material and finish, illustrating manufactures standard colors and finishes for Architect's selection.

D. Manufacturer's Instructions: Installation procedures and requirements for rough openings and attachments.

E. Certificates:
1. Manufacturer's written and signed certification indicating conformance to U.S. Postal Service requirements.
2. US Postal Service acceptance by local postmaster for installed postal specialties.

1.2 QUALITY ASSURANCE

A. Obtain Post Office approval for configuration, fabrication, and keying of mail boxes prior to fabrication. Where not in compliance notify Architect for direction.

B. Single Source Limitations: Obtain postal specialties through or under responsibility of a single manufacturer.

C. Qualifications:
1. Manufacturer: Company specializing in manufacturing the Products specified in this section with minimum 3 years experience.
2. Installer Qualifications: Authorized by postal specialty manufacturer as qualified to perform work of this Section.

1.3 WARRANTY

A. Manufacturer: Standard 5 year Warranty against defect in materials, function, and operation of postal specialties system.

PART 2 - PRODUCTS

2.1 MANUFACTURERS

A. Manufacturers: Provide products from one of the following, or approved substitution.
1. Florence Corp.
2. Mailbox Solutions LLC
3. Postal Products Unlimited
4. Salsbury Industries

B. Approved Substitutions: Architect-approved equal products submitted as specified for substitutions.

2.2 MATERIALS

A. Extruded Aluminum: ASTM B221, 6061-T6 alloy with brushed clear anodized finish.

B. Aluminum Sheet: ASTM B209, 5005 alloy, minimum 0.062 inches thick.

C. Stainless-Steel Sheet: ASTM A666, Type 304.

2.3 MAIL AND PARCEL POST BOXES

A. Perimeter Trim and: Extruded aluminum, mitered corners.

B. Center Uprights: Extruded aluminum.

C. Divider and Partition Plates, Back Cover: 22 gauge, galvanized sheet steel.

D. Cross Brackets: Cold rolled steel, 0.050 inches thick.

E. Construction: Shop fabricate for recessed mounting and attachment into metal stud framed opening specified under work of Section 061000 and for flush face mounting with gypsum board finish specified under work of Section 092900.

F. Configuration: Five compartments high by three compartments wide, large package compartment at lower left hand side, and post office compartment with master lock above large compartment.

G. Mail Box Size: Approximately 36 inch wide by 28-1/4 inches high. Verify dimensions with manufacturer.

H. Pre-punch bolt holes in box for stack bolting to each other and anchoring to adjacent construction; label plates for identifying each box.

I. Accessories:
   1. Clear plastic window number slots at each door.
   2. Snap-on Trim Kit: Perimeter trim matching mail box material and finish.

2.4 DOORS AND HOPPERS

A. Front Loading Hinged Panel: Extruded aluminum, swing open panel for Post Office use. Prepared for Post Office supplied lock cylinder.

B. Compartment Doors: Extruded aluminum, 0.125 nominal thickness, 0.250 rib thickness, prepared for cam lock and cylinder, keyed to resident doors under work of Section 087100. Postal Box Locks: Five pin tumbler lock cylinder, two keys per box, cylinders master keyed to group with two master keys.

2.5 KEYING

A. Key cylinder locks for work of this Section to Owner's keying system as specified by USPS.

B. Provide one key for patron access each postal box door, and other keys as required by USPS.

C. Coordinate with US Postal Services for postal keying of cylinders to be keyed for postal use.

2.6 FINISHES

A. Aluminum: Clear anodized.

B. Steel: Manufacturer's standard baked enamel or powder-coated enamel finish.

PART 3 - EXECUTION

3.1 INSTALLATION

A. Verify that prepared openings are ready to receive work.

B. Conform to manufacturer's instructions and U.S. Postal Service regulations.

C. Bottom of mail and receiving boxes minimum 28 inch above floor.

D. Top of mail boxes maximum 70 inches above floor.

E. Install mail boxes and trim. Secure in position plumb, square, and aligned with adjacent construction.

3.2 FIELD QUALITY CONTROL

A. Arrange for USPS personnel to test work of this Section after installation and verify conformance to USPS regulations.

B. Obtain written acceptance from USPS postmaster authorizing mail collection.

END OF SECTION

THIS PAGE INTENTIONALLY LEFT BLANK

SECTION 142400 - HYDRAULIC ELEVATORS

PART 1 - GENERAL

1.1 SUBMITTALS

A. Shop Drawings: Construction components, materials, details, dimensions, finishes, and locations of equipment. Include clearances.
   1. Hoistway:
      a. Indicate vertical and horizontal bracket spacing, estimated forces on rails, and estimated force in pits, clear hoistway, and pit dimensions.
      b. Show location and sizes of hoistway access doors, entrances, and frames.
      c. Include car guide rail and buffer locations.
   2. Car: Show clearances and travel.
   3. Excavation.

B. Product Data: System components, design requirements, and performance criteria.
   1. Cab design, dimensions, and layout.
   2. Hoistway door and frame details.
   3. Signal and operating fixtures, operating panels, and indicators.
   4. Electrical characteristics and connection requirements.

C. Samples: Color Samples and finishes for finishes.

D. Manufacturers Instructions: Include installation instructions, clearances, dimensions, special procedures, and conditions requiring special attention.

E. Operating and Maintenance Data:
   1. Parts catalog with complete list of equipment maintenance and replacement parts schedule for first 10 years of elevator use. Identify each entry with equipment description and identifying code.
   2. Technical information for servicing operating equipment.
   3. Include legible schematic of hydraulic piping and wiring diagrams of installed electrical equipment and changes made in the Work. List symbols corresponding to identity or markings on hoistway apparatus.
   4. Include one copy of master electric and hydraulic schematic and one copy of lubrication chart.

F. Instruct Owner's personnel in operation and emergency procedures of elevators.

G. Certificate of Final Inspection: Furnish a Certificate of Final Inspection and approval from elevators authorities having jurisdiction, following installation and testing of equipment by manufacturer and prior to Substantial Completion.

1.2 QUALITY ASSURANCE

A. Manufacturer: Specialist in manufacturing work of this Section with minimum 10 years documented experience.

B. Installer:
   1. Specialist in installing work of this Section, either by manufacturer or trained and certified by manufacturer as qualified installer for type and scope of work specified for this Project.
   2. Licensed in Project jurisdiction.

C. Permits and Inspections: Provide licenses and permits and perform required inspections and tests.

PART 2 - PRODUCTS

2.1 MANUFACTURERS

A. Single Source Responsibility: Provide system and components specified in this Section under a single manufacturer's and installer's responsibility, for a complete system that complies with system warranty requirements.

B. Basis of Design Products: Provide product specified, or Architect-accepted substitution:
   1. Schindler Elevator Corp.
   2. TK Elevator Corp. Endura MRL (Basis of Design).
   3. United Technologies, Otis.

2.2 REGULATORY REQUIREMENTS

A. American National Standards Institute (ANSI) - A17.1, Safety Code for Elevators and Escalators.

B. Occupational Safety and Health Administration (OSHA).

C. Elevator Codes and accessibility requirements of authorities having jurisdiction.

D. National Fire Protection Code NFPA 70E - Electrical Safety Requirements for Employees Workplaces.

E. Accessibility Requirements: Conform to ADA, ANSI A117.1, and requirements of authorities having jurisdiction.

F. Seismic Loads: As indicated on Structural Drawings.

2.3 PERFORMANCE / DESIGN CRITERIA

A. Conform to authorities having jurisdiction as required to meet prevailing codes of Project jurisdiction.

B. Hydraulic Elevator Design: Factory engineered hydraulic passenger / service elevator, self supporting to avoid vertical loading on walls of hoistway.
   1. Rated Capacity: 2,100 pounds.
   2. Speed: 125 fpm.

C. Controller Design: Simplex collective operation, microprocessor-based controller, automatic operation by means of car and hall buttons. Return car to last landing served after answering system calls.

D. Fire Recall System: Phase 1, Phase 2, and as required by Code.
   1. Phase 1: Call operation back to Main Floor or alternate Second Floor.
   2. Phase 2: Provisions for Fire Department use.

E. Other Car Operating Control Features.
   1. Top of Car Inspection.
   2. Car-Stall Protection.
   3. Zoned Access.
   4. Car Security Key-Switch.
   5. Manual Standby Power Operation.
   6. Emergency Return Unit with Battery Pack.
   7. Reverse Phase Relay.
   8. Solid State Starting: Reduced voltage starting, open transmission.
   9. Hydraulic Fluid Tank Heater: As necessary to maintain hydraulic oil at operating temperature.
   10. Provision for intercom in car.

F. Door Control Features:
   1. Door Opening: Act automatically when car arrives at landing in response to normal hall or car call.
   2. Door Closing Protection:
      a. Infra-red multi-beam array across opening not exceeding 1-1/4 separation between beams with lowest beam not more than 5/8 inch above floor level.
      b. Reaction time not over 60 seconds to reverse door operation where three or more beams are interrupted.
      c. Design doors, blocked more than 80 seconds, to go into nudging action for adjustable length of time, remain open for a set period of time, or remain open indefinitely until reset.
      d. Seismic Design: Provide equipment and design conforming to Seismic Zone 3.

2.4 MATERIALS

A. Rolled Steel Sections, Shapes, and Rods: ASTM A36.

B. Stainless Steel:
   1. Sheet, Strip, Plate, and Flat Bar: ASTM A666 Type 304.
   2. Tubing: ASTM A269, Type 304.

C. Plywood Underlayment: APA Underlayment Group 1 Exposure 1, minimum 3/8 inch thick, sanded.

2.5 ELEVATOR HYDRAULIC SYSTEM

A. Design: Compact design, suitable for operation under required pressure. Adjustable for maximum smooth operation. Include system with muffler, low pressure valve, and shut-off valve.
   1. Power Component: Mount in hydraulic fluid storage tank.
   2. Control Valve: Control hydraulic flow for up and down directions, and include integral check valve.
   3. Main Valve and Control: Direct by solenoids and other components to direct up and down stops, pressure relief, and manual lowering.
   4. Low-Oil Control.
   5. Pressure Switch.

B. Microprocessor-Based Controller Operation: Include necessary switches and starting switches, relays, solid state components, and hardware required for operation including:
   1. Call allocation.
   2. Logic functions.
   3. Door operation.
   4. Speed.
   5. Position.

C. Overload Device: 3 phase, and as necessary to protect motor against overloading.

D. Hydraulic Controller: Designed for smooth start-ups and stops, and including:
   1. Hydraulic overload protection.
   2. Multi-speed automatic re-leveling.
   3. Check valve.
   4. Tank shut-off valve.
   5. Manual lowering control.

E. Manual Lowering Feature: Permit lowering of elevator at slow speed in event of power failure and for adjustment and other servicing.

F. Cylinder: Steel pipe, thickness, and size suitable for operating pressure, drip ring at head to collect oil seepage, internal guide ring, self-adjusting packaging.

G. Plunger: Steel tubing or pipe, machined to fine polished surface finish, electrically welded on stop ring to prevent plunger from leaving cylinder. Designed to operate with minimum friction.

H. PVC Casing: 12 to 15 inch diameter with bottom cap, sealed to prevent oil seepage and to prevent water penetration between steel casing and PVC casing.

2.6 HOISTWAY COMPONENTS

A. Car Frame: Designed to support platform and car enclosure. Locate buffer striking plate on underside of car frame platform assembly to compress spring buffer mounted in pit before plunger reaches lower limit of travel.

B. Platform: Design for concentrated loads weighing up to 25 percent of rated total capacity. Coordinate with flooring indicated.

C. Car Guide Rails: Steel Tee-sections, complete with brackets and fasteners.

D. Spring Buffer: Helical coil spring.

E. Electrical Wiring: Integral to hoistway, electrical devices for elevator system, including hall panels, pit emergency stop switch, and traveling cable for elevator car.

2.7 CAB ENCLOSURE

A. Cab Type: Vertical light-weight Series 1 with attached non removable panels.

B. Car Front and Door Finish: Stainless steel.

C. Car Top: Aluminum clad panel, mill finish.

D. Cab Ceiling: Suspended, white, translucent polycarbonate diffusers set in extruded aluminum frame with fluorescent lighting fixtures.

E. Emergency Electrical Power: 12 volt power unit, sealed rechargeable battery with static circuits to illuminate elevator and provide power to audio alarm signal in event of building power failure.

F. Exhaust Fan: Mount on car top.

G. Electrical Outlet: 125 volt, 15 amp with ground fault circuit-interrupter protection.

H. Handrail: Round stainless steel tube, 1-1/2 inch diameter, satin finish, located at back and sides of car.

I. Threshold: Aluminum, mill finish.

J. Pads and Pad Hooks:
   1. S-Type hooks.
   2. Quilted, fire retardant pads for covering and protecting walls of cab.

2.8 HOISTWAY ENTRANCES

A. Entrance Frames: 14-gauge (2 mm) sheet steel. Bolted construction, complete one-piece unit assembly, securely fastened to fixing angles mounted in hoistway.

B. Sills: Extruded aluminum.

C. Entrance Doors: 36 inch passenger by 7 foot, single-speed sliding, hollow metal construction with vertical internal channel reinforcement with sight guards.

D. Fire Rating for Entrance and Doors: As indicated.

E. Entrance Door and Frame Finish: Stainless steel.

F. Braille Entrance Signage: Raised Braille floor level indicators in car and hall stations. Locate 4 inch square plates on both sides of entrance jambs.

2.9 ELEVATOR SIGNALS AND FIXTURES

A. Elevator dimensions and location of car operating station, telephone compartment, and handrail conforming to ANSI A17.1.

B. Car Operating Panel: Raised panel with raised square push buttons and message indicators as needed for elevator operation. Provide Braille signage for each push button.

C. Car Position Indicator: 16 segment, digital, vacuum fluorescent.

D. Telephone Cabinet: Locate below car operating panel. Include electrical wiring connected to car traveling cable.

E. Emergency Telephone Communications from Elevator Car:
   1. Two-way intercom with auto dialer to area outside of hoistway.
   2. Hands-off telephone with push button auto dialer and audio communication system for hook-up to 24 hour answering service.
   3. Emergency power, 4 hour, battery-pack in accordance with ANSI 211.1.

F. Car Traveling Lantern: Directional lantern at car entrance, visible from corridor

G. Chimes: Locate at corridor entrance and in elevator cab to sound arrival of elevator at floor landing and opening of doors.

H. Signals: Impulse illuminating type signal fixtures located at car and hall call stations with signage options and stainless steel finish.

I. Hall Fixtures: Push button type controlled by key switch operation. Master key to Owner's keying system.

2.10 FINISHES

A. Stainless Steel: Type 304, No. 4 (Satin Finish).

PART 3 - EXECUTION

3.1 INSTALLATION

A. Conform to Contract Document provisions and manufacturer's instructions.

B. Provide welded construction where bolted construction is not required.

C. Install machinery, guides, controls, equipment, and accessories providing quiet, smoothly operating elevator free of side sway, oscillation, and vibration.

D. Mount rotating and vibrating elevator equipment and components on vibration-absorption mounts, designed to prevent transmission of structure born vibration noise from elevator system.

E. Install hoistway door sills, frames, and headers in hoistway walls. Set entrances in vertical alignment with car openings and aligned with plumb hoistway lines.

3.2 MANUFACTURER'S FIELD TESTS

A. Upon nominal completion of elevator installation, and before permitting use of elevator (either temporary or permanent), perform acceptance tests as required and recommended by Code and governing regulations and agencies.

B. Furnish personnel, equipment and instruments to perform required tests for acceptance of equipment in accordance with code and specification requirements including following:
   1. Confirm elevator speed and performance, stopping accuracy without re-leveling and general riding quality.
   2. Make a final inspection of elevator operation, with Owner's personnel present just before date of Substantial Completion. Inspect functional operation, such as control systems and operating devices.

3.3 MAINTENANCE

A. Maintenance Service: Provide full maintenance and call-back service by elevator Installer for a period of 12 months following Substantial Completion including inspections and services required by authorities having jurisdiction.
   1. Include regular monthly examinations of installation, including adjustments and lubrication.
   2. Repair, and provide equipment and supplies as necessary to keep equipment in first class working operation under normal conditions of use.
   3. At least 30 days prior to end of correction period expiration, schedule final inspection, retest, and examine equipment with Owner's representative.

B. Maintenance Agreement: Submit a 5 year Full Maintenance Agreement for Owner review prior to awarding elevator contract.

C. Maintenance Work: Perform work during regular working hours by installer using fully trained employees.

D. Confer with Owner on requirements for a complete elevator maintenance program.

END OF SECTION

THIS PAGE INTENTIONALLY LEFT BLANK

SECTION 220500 - GENERAL PROVISIONS

PART 1 - GENERAL

A. Provisions of this section apply to all work specified in all sections under Division 22.

B. In addition, work in Division 22 is governed by the provisions of the Bidding Requirements, Contract Forms, General Conditions and all sections under Division 1, General Requirements.

1.2 Examination of Premises: Visit the site, verify all measurements and job conditions, and pay all costs necessary to perform the work.

1.3 The Plumbing Contractor shall be licensed and hold a current contracting license that has been valid for a minimum of two years in the State of Utah as a plumbing contractor.

1.4 The Plumbing Contractor shall have a minimum of five years experience installing commercial plumbing systems similar to those described in these specifications and provide a list of previous projects, including name of project and contact person names and phone numbers.

1.5 The Plumbing Contractor shall be able to bond work he is bidding to perform and shall provide a written statement from the bonding agency proposed to be used for this project as a separate document in addition to the plumbing bid submitted by the General Contractor. The bonding agency shall be one having a Best's insurance rating of A or A+. (Verify all bonding with General Contractor)

1.6 Regulations, Permits, Fees, Charges, Inspections: (Verify with General Contractor)

A. Regulations: Comply with all applicable codes, rules and regulations. All materials and work must comply with local construction, mechanical, plumbing, electrical and fire codes. As a minimum, comply with the following: 1991 IMC, IPC, NEC, UFC, NFPA codes and all City and State codes.

B. Fees and Permits: Pay all connection, installation, use, development, etc., fees and/or charges. Obtain and pay for all required permits and licenses. Refer to Division 1.

C. Inspections: All work must be inspected and approved by local authorities. Prior to final approval, furnish the Architect with certificates of inspections and approvals by the local authorities in accordance with Division 1.

1.7 Drawings and Specifications:

A. Refer to Division 1 for information on submittals and shop drawings.

B. If a conflict exists between the drawings and specifications, promptly notify the Architect.

1.8 Record Drawings: Provide record drawings for all work under sections in Division 22. See Division 1 for detailed requirements covering preparation of record drawings.

1.9 Work and Materials: Unless otherwise specified, all materials must be new and of the quality specified. The workmanship shall be of a quality that is acceptable to the Architect and is comparable to the standards of the trades. Contractor must staff the project with sufficient skilled

workmen, including a fully qualified construction Superintendent, to complete the work in the time allotted. The Superintendent must be qualified to supervise all of the work in his work category.

1.10 Approvals of Materials and Equipment: Refer to Division 1 for description of material and equipment for prior approvals and substitutions.

1.11 Maintenance Manual:

A. Prior to completion of the project, compile a complete equipment and maintenance manual for all equipment supplied under sections of Division 22, as described in Division 1.

B. Manuals shall be bound in a three-ring binder. A preliminary submittal of the manual shall be made to the Architect 90 days after receiving approved submittals. Final submittal of the manual shall be made four weeks prior to substantial completion of the project.

1.12 Shop Drawings:

A. Engineer's Review: The Engineer shall review and take appropriate action on shop drawings, product data, samples and other submittals required by the contract documents. Such review shall be only for general conformance with the design concept and general compliance with the information given in the contract documents. It shall not include review of quantities, dimensions, weights or gauges, fabrication processes, construction methods, coordination with the work of other trades or construction safety precautions, all of which are the sole responsibility of the Contractor. The Engineer's review shall be conducted with reasonable promptness consistent with sound professional practice. Review of a specific item shall not indicate acceptance of an assembly of which the item is a component. The Engineer shall not be required to review and shall not be responsible for any deviations from the contract documents not clearly noted by the Contractor, nor shall the Engineer be required to review partial submissions or those for which submissions for correlated items have not been received.

B. Submit shop drawings in accordance with Division 1 and all data for all equipment provided under Division 22 within 30 days after award of contract. Index all submittals and reference to these specifications. Submit all shop drawings in a single batch at one time. Submit shop drawings for all equipment provided under Division 22, including the following:

1. Insulation materials and finishes for all types of piping.

2. Water heaters of all types.

3. Access doors.

4. Access panels.

5. Plumbing fixture cuts, trim and fittings, rough-in dimensions and special supports.

6. Plumbing fixtures, equipment and specialties.

7. Domestic water pipe, fittings, valves, hangers and specialties showing manufacturer and type.

8. Waste and vent piping, fittings, couplings, hangers.

9. Natural gas pipe, fittings, valves, regulators.

10. All other equipment as shown, indicated, specified, required and as directed by Architect.

1.13 Equipment Purchases: Arrange for purchase and delivery of all materials and equipment within 15 days after approval of submittals.

1.14 Cooperative Work:

A. Correct without charge any work requiring alteration due to lack of proper supervision or failure to make proper provision in time. Correct without charge any damage to adjacent work caused by the alteration. See Division 1 for additional requirements.

B. Cooperative Work Includes:

1. General supervision and responsibility for proper location, rough-in and size of work related to Division 22 but provided under other divisions of these specifications.

2. Installation of sleeves, inserts and anchors bolts for work under sections in Division 22.

3. Electrical work as specified herein. Refer to Division 26 for requirements.

1.15 Identification:

A. Pipe:

1. Mark each individual pipe with Brady, Seton, Brimar, or Set Mark identification markers of snap-on type after pipe has been painted or insulated where exposed.

2. Install stencils at all major branch takeoffs, risers and at 10-foot intervals on straight runs and at each entrance or exit from pipe shafts. Markers shall be located for maximum visibility from expected personnel approach.

3. Identification material sizes shall be as follows:

2" and under 1/2" high letters

Over 2" 1" high letters

Provide a typewritten schedule of all markers used, with identification framed under glass and posted in the mechanical equipment room.

4. Identify pipe with following:

Service	Abbreviation

Fuel Gas	G
Domestic Cold Water	CW
Domestic Hot Water	DHW
Sanitary Sewer	SS
Equipment Drains	D
Vent	V
Roof Drain	RD
Roof Overflow	ROF

1.16 Substitutions:

A. Where Manufacturer=s names appear, other Manufacturers may be substituted upon obtaining written approval of Architect **at least 10 days prior to opening of bids**. The contractor will be required to complete and sign a AProposed Substitution Request Form@ that will be reviewed by the Architect, Engineer, and Owner. The submission of the AProposed Substitution Request Form@ shall be **at least 10 days prior to opening of bids**.

B. Any prior approval of alternate equipment does not automatically exempt the supplier from meeting the intent of these specifications. Failure to comply with the operational and functional intent of these specifications may result in the total removal of the alternate system at the expense of the contractor.

1.17 Guarantee: Guarantee all material, equipment, and workmanship for all sections under Division 22 in writing to be free from defects of material and workmanship for one year from date of final acceptance as outlined in Division 1. Replace without charge any material or equipment proving defective during this period. The guarantee shall include performance of the equipment under all conditions of load, installing any additional items of control and/or protective devices as required and the replacing of any refrigerant lost.

1.18 Electrical Work:

A. Electrical wiring, all raceways, wiring, outlet and junction boxes, and labor for installation of the wiring and equipment shall be included in Electrical Division 26 of the specifications.

B. Before ordering any equipment. Verify the available voltage and phase for all motors with the Electrical Contractor.

C. Submit a complete list of all motors prior to final closeout of job indicating the locations, horsepower, voltage, phase and amperage draw of each motor.

D. All field wiring and equipment must conform to the applicable sections of the Electrical specifications, Division 26.

1.19 Welding Codes and Standards: All welding and other criteria covered by this specification shall be in accordance with the following code:

ASME Boiler and Pressure Vessel Code

Section IX ANSI Code for Power Piping: B31.1

PART 2 - PRODUCTS

2.1 Equipment Design and Installation:

A. Uniformity: Unless otherwise specified, provide all equipment of same type or classification by the same manufacturer.

B. Design: Design all equipment in accordance with ASME, AGA, UL and other applicable technical standards as follows:

Pressures vessels - ASME Code constructed and stamped

Electric appliances - UL labeled

Fans - AMCA rated and stamped

PART 3 - EXECUTION

3.1 Verification of Dimensions:

A. Scaled and figured dimensions are approximate only. Before proceeding with work, carefully check and verify dimensions at site, and be responsible for properly fitting equipment and materials together and to the structure in spaces provided.

B. Drawings are essentially diagrammatic and many offsets, bends, special fittings and exact locations are not indicated. Carefully study drawings and premises in order to determine best methods, exact locations, routes, building obstructions, and install apparatus and equipment in available locations. Install apparatus and equipment in manner and in locations to avoid obstructions, preserve headroom, and keep openings and passageways clear.

3.2 Cutting and Patching: Cut work and patch per Division 1 as necessary to properly install the new work. As the work progresses, coordinate necessary openings, holes, chases, etc., in their correct location. If the required openings, holes and chases are not in their correct locations, make the necessary corrections at no cost to the Owner. Avoid excessive cutting and do not cut structural members without the consent of the Architect. Patching by General Contractor at Mechanical, Plumbing or Fire Protection Contractor's expense. Include as a part of the work under this contract all structural framing required by penetrations through the roof and necessary steel to support ducts and pipes between structural steel unless shown on the structural drawings.

3.3 Closing-in of Unfinished Work: Cover no work until inspected, tested and approved. Where work is covered before inspection and test, uncover it, and when inspected, tested and approved, restore all work to original proper condition.

3.4 Excavation and Backfill:

A. Perform all necessary excavation, shoring and backfilling required for the proper laying of all pipes and conduits inside the building and premises, and outside as may be necessary. Conform to Division 2 requirements. Remove all excess excavated materials from the site or dispose of on site as directed by General Contractor.

B. Excavate all trenches open cut, keep trench banks as nearly vertical as practicable, and sheet and brace trenches where required for stability and safety. Excavate trenches true to line and make bottoms not less than 18" wide but no wider than necessary to provide ample work room. Grade trench bottoms accurately to provide uniform bearing and support for each section of pipe on undisturbed soil along its entire length. Dig "bell" holes after the trench bottom has been graded. Machine grade only to the top line of the pipes, doing the balance by hand. Do not cut any trench near or under footings without first consulting the Architect. Comply with OSHA requirements.

C. Provide backfilling and compaction in accordance with requirement of Division 2 and under the direction of the Architect and the Owner's testing firm to the required density. Make the first 2 feet of fill in 6" layers, each thoroughly compacted as directed, and free from rocks, large clods of earth, leaves, branches, and debris. Compact the rest of the backfill to prevent settlement as directed, using in the backfill no rocks larger than 4" in diameter, and using no rocks at all in the top 12".

3.5 Accessibility:

A. Install valves, dampers, thermometers, gauges, traps, cleanouts, control devices or other specialties requiring reading, adjustment, inspection, repairs, removal or replacement conveniently and accessibly throughout the finished building. Where any of these devices are shown on the contract drawings to be installed above any inaccessible ceiling, the Mechanical Contractor shall furnish access doors or panels as required.

B. All access doors or panels in walls and ceilings required for access to control devices, traps, valves and similar devices are to be furnished and installed as part of the work under this section. Provide type as specified under Division 8.

C. Refer to drawings and "Finish Schedule" for type of wall and ceiling in each area and for rated construction.

D. Coordinate work of various sections to locate valves, traps, and dampers with others to avoid unnecessary duplication of access doors.

3.6 Roof Flashings: Flash and counterflash all piping, conduits and ductwork penetrating roofing membrane with flashing per roofing manufacturer's recommendations. Refer to architectural drawings for detailing of duct and pipe penetrations through roof.

3.7 Equipment Rough-in:

A. Rough in all equipment and fixtures as designated on the drawings and in the specifications. The drawings indicate only the approximate location of rough-ins. The exact rough-in locations must be determined from large-scale certified drawings. The Contractor shall obtain all certified rough-in information before progressing with any work for rough-in final connections.

B. Be responsible for providing all outlets and services of proper size at the required locations.

C. Minor changes in the contract drawings shall be anticipated and provided for under this division of the specifications.

D. Rough-in only (unless otherwise designated on the drawings) shall include the following:

1. Plumbing: Provide all services designated and required, including waste and water. Valve and cap all stub-outs for water and gas. Cap all waste and vent outlets.

3.8 Owner-Furnished and Other Equipment:

A. Rough-in only for all Owner-furnished equipment (see Division 1) and all equipment furnished under other sections of the specifications, except as otherwise specified and/or noted on the drawings.

B. Provide all services designated, valve and cap all piping and cap all waste piping and leave in a clean and orderly manner.

C. Rough-in requirements shall be as outlined in the preceding paragraph titled "Equipment Rough-In."

3.9 Equipment Final Connections:

A. Provide all piping final connections for all equipment under Division 22 as required herein specified and indicated on the drawings.

B. Plumbing: Provide final plumbing connections complete with shutoff valves, risers, traps, vacuum breakers and indirect wastes for all equipment furnished and installed under other sections of these specifications, except as otherwise designated. Included under the Plumbing section of the specifications are the final connections to the following:

1. Miscellaneous equipment specified to be furnished and installed under other divisions of the specifications.

3.10 Pipe and Equipment Supports:

A. Where supports, foundations, stands, suspended platforms for machinery, tanks, or other equipment are indicated or specified, perform the following:

1. Locate support members to avoid equipment strains and interference with piping connections, tube pulling or other maintenance operations.

B. Grout under all equipment after leveling, filling completely the space between machinery bed plate and foundation surface as specified in Division 3. Finish exposed surface of grout for a neat appearance.

C. Floor Stands: Where equipment is mounted standard or on legs, construct of structural steel or steel pipe and fittings, cross-brace and fasten with flanges or plates bolted to floor.

D. Ceiling or Wall Supports: Use suspended platform, strap hangers, bracket or shelf, whichever is most suitable for equipment and location. Construct of structural steel

members, steel plates, rods or pipe as required. Cross-brace and fasten to building structure or inserts in an approved manner.

E. Steel Work: Neatly fabricate and erect steel work with burrs and welding spatter ground off. Paint after fabrication with a rust-inhibitive primer.

3.11 Cleanup:

A. In addition to cleanup specified under Division 1, thoroughly clean all parts of the equipment. Where exposed parts are to be painted, thoroughly clean off any splattered construction materials and remove all oil and grease spots. Wipe the surface carefully and scrape out all cracks and corners.

B. Thoroughly flush and clean out all water circulating systems. Remove, clean and replace all strainer elements.

C. During the progress of the work, keep the premises clean and free of debris.

3.12 Painting:

A. Except as otherwise specified or indicated in the architectural drawings and/or specifications, paint all exposed unfinished metal with one coat of rust-inhibiting primer. (Galvanized ductwork and factory painted equipment shall be considered as having primed surface.)

B. Finished painting is specified under Division 9.

3.13 Connections to Services: Provide all connections to sanitary sewer lines, storm sewer, gas lines, water lines, electrical services furnished under other contracts, except as otherwise specifically designated. Provide all necessary tees, taps and connections required to properly connect to all mains. Verify all required City requirements before making any piping connections to sanitary sewer, storm sewer, water or gas piping and conform to them during installation.

3.14 Objectionable Noise and Vibration: Construct and brace the metal partitions, ducts and sheet metal housings to prevent vibration or rattling when systems are in operation. Install connections to equipment so noise and vibration will not reach the conditioned area through ducts, piping, conduit, sheet metal work, or the building structure. Provide power-driven equipment suspended from the structure with spring type isolation.

3.15 Welding:

A. Procedures:

1. All procedures and welders must be qualified in accordance with the requirements of Section IX, ASME Boiler and Pressure Vessel Code and ANSI code for power piping B31.1. Procedure qualification test records and acceptance shall be submitted with the welding procedure prior to the start of fabrication.

2. Architect's inspector or authorized representative will review performance qualification records of individual welders.

B. Welding Processes: The following welding processes are permitted, provided that the procedure is qualified in accordance with Section IX, ASME Boiler and Pressure Vessel Code.

1. Manual shielded metal-arc.

2. Gas tungsten-arc.

3. Other welding processes may be used providing they are qualified in accordance with Section IX, ASME Boiler and Pressure Vessel Code.

C. Restrictions: Weld bevel preparations shall be provided on all welding fittings and shall be machined or ground to remove all discoloration if flame or arc cut.

D. Welding Filler Material:

1. A filler material control procedure shall be submitted to Owner for review and acceptance prior to performing any welding.

2. All shielded metal-arc welding shall be performed using low-hydrogen type electrodes such as E 7018.

E. Preheat and Interpass Temperature:

1. Preheat for pressure components shall be as specified in Table 132 of ANSI B.1.

2. Preheat and interpass temperature shall be determined by temperature indicating crayons, contact pyrometers or other suitable means.

F. Postweld Heat Treatment: Postweld heat treatment for pressure components shall be as specified in Table 131 of ANSI B31.1.

END OF SECTION 220500

THIS PAGE INTENTIONALLY LEFT BLANK

SECTION 220501 - SUMMARY OF WORK FOR PLUMBING

PART 1 - GENERAL

1.1 Description of Work

A. This section describes the work required under the Plumbing sections of these specifications.

1.1 Scope

A. For general convenience these specifications are divided into divisions and sections. The work for the plumbing contract is in general described in Division 22. The work under these sections include furnishing and installing plumbing systems. The work includes, but is not necessarily limited to, the installation of the following:

1. Complete sanitary plumbing waste and vent systems with connections to all plumbing fixtures and equipment to outside sanitary sewer system within 5 feet of building.
2. Domestic water piping with services to all fixtures and equipment, including connections to outside water system within 5 feet of building.
3. Domestic hot water heating equipment including piping, valves, etc. as indicated on the drawings and specified.
4. Insulation specified herein for domestic hot water supply piping, and other pipe as specified.
5. Natural gas piping system including piping, valves, pressure regulators, including connections to all equipment and connections to gas distribution system.
6. Adequate supervision of erection, balancing and adjustments and instructions for proper operation and maintenance.
7. Plumbing fixtures as specified herein and shown on the drawings.
8. Provide water and gas supplies to heating, air conditioning and special equipment using same. Valve all stub-outs and plug for final connection to equipment by Air Conditioning Contractor. Coordinate location at site with Air Conditioning Contractor.
9. Payment for all plumbing permits, inspection and installation fees. (Coordinate with General Contractor)
10. Sterilization of potable water system.

1.2 Alternate Equipment

A. Specification of all equipment and materials in Division 22 by brand name is intended to establish a standard of quality. Further, this equipment has been checked as to size and weight requirements, and space allocations have been made accordingly. The Contractor is responsible to verify prior to bidding that all specified and alternate items to those specified will be available in time for installation during timely progress of the work.

B. Submittal of equipment by other acceptable manufacturers must be made in accordance to "Instructions to Bidders" section and shall be complete in every detail including space requirements, weight, complete performance data, and supplemental data requested by the Architect. Contractor shall be responsible for assurance that the equipment meets all requirements detailed in this and other sections and as shown on the drawings.

C. The following is a list of manufacturers whose equipment is acceptable as to manufacture, subject to conformance with all drawings.

D. Approved Plumbing Equipment Manufacturers: (Note some items may not be required)

Plumbing Fixtures: American Standard, Kohler, Toto, Gerber, Watts, Zurn, Danze, Sterling, Lasco, Western Pottery.

Water Closets: American Standard, Kohler, Toto, Gerber, Sterling, Western Pottery.

Plumbing Faucets: Chicago, American Standard, Symmons, Delta, Kohler, Speakman, Royal, T & S, Moen, Gerber, Zurn, Danze.

Flush Valves: Sloan, Delany, Zurn, Moen, American Standard, Gerber, Zurn.

Plumbing Supply Stops: Eastman, Crane, Kohler, Wolverine, McGuire, Brasscraft, EBC, Zurn, Chicago.

P-Traps: Crane, Kohler, McGuire, Brasscraft, Dearborn, EBC, Zurn.

Closet Seats: Sperzel, Church, Olsonite, Beneke, Bemis, American Standard, Zurn.

Floor Drains: Zurn, Smith, Wade, Josam, Ancon, Mifab, Watts, Oatey, Sioux Chief, Sun Drainage.

Cleanouts: Zurn, Smith, Wade, Josam, Mikro, Mifab, Watts, Sun Drainage.

Roof Drains and Overflows: Zurn, Smith, Wade, Josam, Ancon, Mifab, Watts, Sun Drainage.

Shock Absorbers: Zurn, Smith, Wade, Josam, PPP, Sioux Chief, Watts, Mifab.

Stainless Steel Sinks: Elkay, Just, Moen, Titan.

Electric Water Coolers: Elkay, Sunroc, Halsey Taylor, Haws Corporation, Westinghouse, Murdock.

Valves: Milwaukee, Crane, Kennedy, Stockham, Mission, Grinnell, Keystone, Watts, American Valve.

Gas Fired Domestic Hot Water Heaters: Ruud, National, PVI, State, Rheem, Bradford White, A.O. Smith.

Pipe Hangers and Supports: Grinnell, Elcen, Kin-Line, Unistrut, F & S, B-Line, Michigan, Piping Technology & Products, Wesanco.

Pressure Gauges: Weksler, Trerice, Palmer, Marsh, Weiss.

Pipe and Equipment Insulation: Owens-Corning, CertainTeed, Manville, Pittsburgh, Armstrong.

Hose Bibs: Mifab, Woodford, Chicago, Acorn, Wolverine, McGuire, Watts, Josam, Prier, Zurn.

Thermostatic Tempered Water Valves: Symmons, Powers, Leonard, Bradley, Watts, Lawler, Caleffi, Acorn.

Gas Pressure Regulator: Fisher, Equimeter, Pietro Fiorentini.

Emergency Equipment: Bradley, Acorn, Haws, Speakman, Guardian.

Disposals: Insinkerator, Evergrind, Kenmore.

END OF SECTION 220501

SECTION 220594 - TESTING

PART 1 - GENERAL

1.1 This section describes the labor, materials and services required for the testing of all systems.

PART 2 - EXECUTION

2.1 Test Procedures

A. Make tests before the rough work is covered. The system may be tested in parts if approved.

B. When the tests show the work in any way defective, remove defective material or equipment from the premises and retest.

C. Make piping tests on all piping as required by code. Pressure test for four hours, unless otherwise noted.

2.2 Testing out

A. Check out and test operate all equipment installed under the sections of these specifications, including a check of all work performed under the Electrical and Mechanical divisions in conjunction with the equipment installed under all sections of this division.

1. Fill water pipe lines, flush and drain, and then refill with clear water. Repeat this procedure three times, under the observation of the Architect=s Representative.

2. When the test or observations show that the work is in any way defective or at a variance with the specification requirements, immediately make all changes necessary to correct the work and remedy the defects to the satisfaction of the Architect. Remove any defective material or equipment from the premises. In the event the Contractor does not remedy all defects and make all changes demanded by the Architect within a reasonable time, the right is reserved to have the defects remedied or changes made and to charge the cost of the work against the account of the Contractor.

3. Furnish all appliances, equipment and labor for the tests and meet all expenses of the tests.

2.3 Final Tests

A. Before acceptance and at a time designated, make a complete test to demonstrate that all controls are adjusted and that, in general, the system is placed into proper operation. Furnish a skilled operating engineer for a period of at least eight hours, at time or times designated by the Owner, to instruct the Owner's representative in the operation and maintenance of the equipment.

END OF SECTION 220594

THIS PAGE INTENTIONALLY LEFT BLANK

SECTION 220716 - GENERAL PIPING REQUIREMENTS

PART 1 - GENERAL

1.1 WORK SPECIFIED HEREIN

A. This section describes the workmanship, labor, services and miscellaneous equipment and materials required for the installation of all piping in Division 22.

PART 2 - PRODUCTS (NOT USED)

PART 3 - EXECUTION

3.1 PIPE INSTALLATION

A. Do not close up, furr in, or cover piping before it has been tested and inspected as specified.

B. Cover or plug openings in pipes, drains, fittings and equipment during construction to keep system free of foreign matter.

C. Conceal all piping unless otherwise indicated or specified.

D. Install piping to maintain headroom, keep access openings clear and offset piping as required to maintain clearances.

E. Install piping at right angles or parallel to adjacent walls.

F. Keep piping free from sags, traps and unnecessary bends.

G. Do not spring, bend or force pipe into place. Use fittings for all offsets and changes of alignment in piping.

H. Do not use street elbows, bushings and longscrew nipples.

I. Do not install any pressure piping in floor slabs or in ground under floor slabs, unless otherwise indicated or specified.

J. Do not locate piping in electrical equipment rooms unless it serves that room. Do not locate it directly above electrical equipment in any room. Where piping is located in an electrical equipment room which it serves, provide a 20 gauge galvanized sheet metal drip pan with drain line to floor drain.

K. Where change in pipe size occurs, use appropriate reducing fittings, no bushings.

3.2 UNIONS, FLANGES AND DIELECTRIC COUPLINGS

A. Unions Required: On inlet or outlet of all valves and equipment with connections 2" and smaller and elsewhere as indicated on the contract documents.

B. Flanges Required: On inlet or outlet of all equipment having connections 2-1/2" and larger. On inlet or outlet of all valves and fittings having flanged ends or requiring

companion flanges. Do not use slip-on flanges on short radius ells, tees, reducers and fittings that do not have sufficient straight length to permit proper alignment and construction of a flange joint.

C. Dielectric Couplings: Provide dielectric couplings at all points where copper or brass pipe or equipment is joined to ferrous pipe and equipment. This requirement does not apply to brass valves in steel lines or joints between copper and cast iron drainage lines.

3.3 PIPE SLEEVES AND ESCUTCHEONS

A. Sleeve all pipes passing through masonry or concrete floors and walls.

B. Provide piping passing through masonry, concrete, tile and gypsum wall construction with not lighter than 22 gauge galvanized steel sleeves with lock seam, except as otherwise indicated.

C. Sleeves through floor construction shall be a minimum of Schedule 40 black steel pipe with 3" weep ring flange welded to pipe except as otherwise indicated. Flange shall be embedded in concrete.

D. Floor sleeves shall extend a minimum of 2" above the floor.

E. Pipes passing through walls labeled on the architectural drawings as fire-rated shall be sleeved and sealed with fireproof caulking. Refer to the contract drawings for additional information and details.

F. Sleeves for insulated pipe must be large enough to clear insulation.

G. Where sleeves are placed in exterior walls below grade or in floor of finished areas. Make the entire penetration watertight.

H. Where pipe motion due to expansion and contraction will occur, make sleeve of sufficient diameter to permit free movement of the pipes.

I. Provide chrome-plated or stainless steel escutcheons at all pipe penetrations through walls, ceilings or floors of all finished areas.

3.4 VALVES

A. General: Locate and arrange valves for complete regulation and/or removal of equipment.

B. Location: Install valves as indicated and at all the following locations:

1. Pressure connections to equipment.
2. Takeoff from vertical risers.
3. Domestic connections to utilities.

C. Concealment: Unless otherwise indicated, conceal all valves in the finished parts of the building.

D. Grouping: Wherever possible, group valves to provide a neat appearance with all parts accessible.

3.5 PIPE JOINTS

A. Screwed Joints: Cut accurately to measurements established at the building. Ream pipe and remove all burrs. Cut threads per ANSI B2.1 with clean sharp die to full thickness of die. Apply pipe dope or teflon tape to male thread prior to jointing. After jointing, leave not more than 3 full threads exposed.

B. Solder Joints: Cut square and remove burrs. Thoroughly clean outside of male end and inside of female fitting to a bright finish. Coat pipe and fitting with solder flux, applied with brush. Solder joint as specified and remove excess solder. Remove the internal parts of soldered valves prior to soldering. Carefully follow equipment manufacturer's directions for soldering on or adjacent to his equipment.

C. Welded Joints:

1. Electric weld all piping using ASME certified welders (refer to Section 15000 for additional requirements on welding). Carefully follow equipment manufacturers directions for welding on or adjacent to his equipment. Use outlets, fittings and joints designed for welded piping. Use long radius ells at all pump connections and where indicated and butt-welded or socket-welded fittings at all offsets or bends.

2. Make connections to mains with Schedule 40 welding fittings when the branch is the same size as the main or one size smaller.Use "Weldolet" fittings when the branch is 2 or more sizes smaller than the main. Use "Threadolet" fittings for branches 2" or smaller.

D. Mechanical Joints: Install with mechanical couplings or compression joints in strict compliance with the manufacturer's instructions.

E. Solvent Weld Joints: Install solvent welded joints in strict compliance with the manufacturer's instructions and remove all excess solvent.

3.6 PIPE HANGERS

A. General: Secure all piping in place using approved hangers, supports and anchors designed to support the weight of the pipe, fluid and insulation. Arrange hangers to prevent transmission of vibration from the piping to the building structure, with hangers and supports designed to allow for expansion and contraction.

B. Pipe Support: Support piping at each change of direction, at ends of branches, at base and top of riser pipes and drops, and wherever necessary to prevent sags, bending or vibration.

C. Insulation Guards: Size hangers on insulated piping to fit outside the covering. Protect insulation from crushing at hanger locations with sheet metal pipe saddles. Use rigid insulation under saddle.

D. Riser Piping: Support at top and bottoms as specified for horizontal piping. Support at intermediate floors by means of pipe clamps bolted to piping. In addition, support soil and waste piping at base of stack. Where pipe sleeves extend above floor, support from underside of slab.

3.7 EXPANSION AND CONTRACTION

A. Install all pipe work and conduit in such a manner that its contraction and expansion will not do any damage to the pipes, conduit, the connected equipment or the building. Install offsets, swing joints, expansion joints, pipe clamps and anchors as required to prevent excessive strains in the pipe work. Install all supports to permit the systems to contract and expand freely without putting any stress or strain in the respective systems.

END OF SECTION 220716

SECTION 220718 - PIPING SPECIALTIES

PART 1 - GENERAL

1.1 WORK INCLUDED HEREIN

A. Provide and install piping specialties as specified herein and as shown on the drawings.

PART 2 - PRODUCTS

2.1 PIPE HANGERS

A. Piping 2-1/2" and Smaller: Use adjustable, split ring malleable iron type (Grinnell Fig. 104) or adjustable steel clevis type (Grinnell Fig. 260) with threaded solid steel hanger rods.

B. Piping 3" and Larger: Use adjustable steel clevis type hangers (Grinnell Fig. 260) with threaded solid steel hanger rods.

C. Grouped Piping: Trapeze type hangers with rollers may be used where 2 or more pipes run parallel to each other. Submit shop drawings of all trapeze hangers for approval before progressing with any work.

D. Size all hangers on insulated piping to fit outside covering.

E. Hanger Rod Sizes:

Pipe Size	Rod Diameter (Inches)
2" and smaller	3/8
2-1/2" and 3"	1/2
4" and 5"	5/8
6"	3/4
8" through 14"	7/8

F. Hanger Rod Spacing (Horizontal Piping):

Pipe	Max. Hanger Spacing (Ft. O.C.)
Steel pipe 3/4" and smaller	6
Steel pipe 1"	8
Steel pipe 1-1/4" through 12"	10
Steel pipe 14" and larger	12
Copper tubing 1-1/4" and smaller	6
Copper tubing 1-1/2" and larger	8
PVC & ABS piping	4

Special piping materials As recommended by manufacturer.

2.2 SAFETY COVERS

A. Install Handy-Shield, as manufactured by Plumberex Specialty Products, safety covers on all supply piping and waste piping beneath handicapped lavatories. Shields shall meet the requirements of Uniform Federal Accessibility Standards 4.19.4 GSA and ANSI Document A117-1-1980.

PART 3 - EXECUTION

3.1 INSTALLATION OF HANGERS AND SUPPORTS

A. Refer to structural drawings and details for acceptable methods and locations of attachment to structural members.

B. Provide hangers at all offsets, tees, within 12" of all horizontal elbows, and elsewhere as herein described.

C. Support all piping from walls, structural members, or from the ceiling as specified or as detailed.

D. Support vertical piping as specified or as detailed.

E. Where structural or piping conditions or clearance requires other than the specified means of supporting the pipes, use means as directed by the Architect.

F. Wrap piping wherever lines run through joists, studs and framing 12" in length with felt on paper backing to prevent the pipe from rubbing.

G. Install chrome-plated split escutcheons around all pipes passing through finished walls, floors and ceilings.

H. Sleeve and seal air and watertight all piping passing through exterior walls, through plenum or fire walls above ceilings, and elsewhere as designated. All sealers shall be waterproof and fireproof.

END OF SECTION 220718

SECTION 220719 - PIPE INSULATION FOR PLUMBING

PART 1 - GENERAL

1.1 SCOPE

A. Apply insulation after piping has been installed, tested, approved, dry, and in a clean condition.

B. Insulate Main Cold Water Supply Line in any areas that it is exposed or installed in unconditioned spaces. Coordinate any heat tape as needed with Electrical Contractor.

C. Hot water pipe insulation shall be a minimum of one inch where required by code and as indicated on the plumbing plans and details.

D. Provide sound insulation on drain lines that transition above common areas and below upper floor rooms to deaden noise.

PART 2 - PRODUCTS

2.1 MATERIAL

A. Premolded fiberglass insulation, maximum K factor 0.24 at 75EF mean temperature, minimum 3.75-pound density. Insulation shall have all-service jacket with white finish.

PART 3 - EXECUTION

3.1 APPLICATION

A. Piping: Insulation end joints to be tightly butted together with butt joint strips and the longitudinal seam stapled closed with outward clinch staples 2" on centers. Where possible, locate all longitudinal seams out of sight. Coat all staples with adhesive. Cover exposed pipe insulation with 6-ounce canvas jacket coated 100% with Foster lagging adhesive 30-36.

B. Valves, Fittings and Flanges (Concealed): Insulate all concealed valves, fittings and flanges with Zeston premolded sectional covering.

C. Valves, Fittings and Flanges (Exposed): Insulate all exposed valves, fittings and flanges as specified for concealed fittings, and cover with 6-ounce canvas coated 100% with Foster lagging adhesive 30-36.

D. Hangers and Rollers: Provide a protective shield covering of 18 gauge galvanized steel placed centrally at all hangers and rollers. Shield shall cover half of the insulation and have a length of not less than 12". Insert a 12" section of cellular glass or calcium silicate at each hanger and roller location.

END OF SECTION 220719

THIS PAGE INTENTIONALLY LEFT BLANK

SECTION 221116 - DOMESTIC WATER SYSTEM

PART 1 - GENERAL

1.1 Provide PVC Sleeves for PEX Piping where it passes under slabs.

1.2 Provide Copper Termination at all shut-off valves. Provide required transition fittings from PEX to Copper Pipe at the wall termination.

PART 2 - PRODUCTS

2.1 Piping: (Shall meet the standards set forth in IPC Tables 605.3, 605.4, 605.5.)

A. The Water Piping from the PRV Station for all lines larger than 2-inches shall be CPVC or PPR Piping Product (provide all manufacturer recommended expansion joints). Water lines that are 2-inches and smaller will be PEX. Provide appropriate transitional fittings at locations where the water piping material changes.

2.2 Fittings:

A. Shall be compatible with piping material.

2.3 Backflow Preventers: Specified in Plumbing Specialties section.

PART 3 - EXECUTION

3.1 Extend water piping to all fixtures, outlets and equipment. Provide shutoff valves or fixture stops as required for proper service.

3.2 Provide capped or plugged and valved outlets where indicated for future equipment connections.

3.3 Hold lines which are specified to be insulated a sufficient distance from other work to permit installation of insulation.

3.4 Provide necessary allowance in piping systems to handle expansion and contraction. Install ample swings or offsets in branch connections to avoid undue strains on fittings or short pipe supplies. Provide expansion loops and pipe anchors as indicated on the drawings.

3.5 Where shown on the drawings or required by local plumbing code, install Trap Guard in floor drains, floor sinks, etc.

3.6 Provide approved pressure type backflow prevention devices required by governing authorities.

3.7 Coordinate overhead piping with mechanical ductwork and electrical conduits.

3.8 Provide a mechanical shock absorber at any fixtures using a quick-closing valve device (flush valves, dishwasher (residential), fridge water connection, washing machines, etc.).

3.9 Sterilization: Sterilize the entire water distribution system thoroughly with a solution containing not less than 50 parts per million of available chlorine. For the chlorinating material use sodium hypochlorite solution, conforming to Federal Specification 0-8-441, Grade D, and introduce into the system in a manner approved by the Architect. Allow the sterilizing solution to remain in the system for a period of 8 hours, during which time all valves and faucets shall be opened and closed several times. After sterilization, flush the solution from the system with clean water until the residual chlorine content is not greater than 0.2 parts per million, unless otherwise directed. *** NOTE: CONTRACTOR SHALL PROVIDE ARCHITECT/ENGINEER WITH CERTIFICATION OF TEST RESULTS. ***

3.10 Test: Fill system with water and pressurize to 125 psi and hold for four (4) hours with no pressure drop. Test and obtain approval on all underground piping before covering work.

END OF SECTION 221116

THIS PAGE INTENTIONALLY LEFT BLANK

SECTION 221313 - SANITARY WASTE AND VENT SYSTEM

PART 1 - PART 1 GENERAL

1.1 SUMMARY

A. Includes But Not Limited To

1. The Drain Waste and Vent System will be Schedule-40 PVC Piping rating for Drain Waste and Vent.
2. Furnish and install soil, waste, and vent piping systems within building and connect with outside utility lines 5 feet out from building. Continuation of sewer system will be indicated on Civil Plans.
3. Perform excavation and backfill required by work of this Section.

1.2 REFERENCES

A. American Society For Testing And Materials

1. ASTM D 2235-96a, >Standard Specification for Solvent Cement for ABS Plastic Pipe and Fittings=
2. ASTM D 2321-00, >Standard Practice for Underground Installation of Thermoplastic Pipe for Sewers and Other Gravity-Flow Applications=
3. ASTM D 2564-96a, >Standard Specification for Solvent Cements for Poly (Vinyl Chloride)(PVC) Plastic Piping Systems=
4. ASTM D 3034-00, >Standard Specification for Type PSM Poly Vinyl Chloride)(PVC) Sewer Pipe and Fittings=
5. ASTM F 628-00, >Standard Specification for Acrylonitrile-Butadiene-Styrene (ABS) Schedule 40 Plastic Drain, Waste, and Vent Pipe and Fittings with a Cellular Core=
6. ASTM F 656-96a, >Standard Specification for Primers for Use in Solvent Cement Joints of Poly (Vinyl Chloride)(PVC) Plastic Pipe and Fittings=
7. ASTM F 789-95a, >Standard Specification for Type PSM Poly (Vinyl Chloride)(PVC) Plastic Gravity Flow Sewer Pipe and Fittings=
8. ASTM F 891-00, >Standard Specification for Coextruded Poly (Vinyl Chloride)(PVC) Plastic Drain, Waste, and Vent Pipe Fittings with a Cellular Core=

PART 2 PRODUCTS

2.1 COMPONENTS (Shall meet the standards set forth in IPC Tables 702.1, 702.2, 702.3, 702.4.)

A. Indicated in Section Summary.

B. Buried Piping

1. Minimum size of waste piping installed under floor slab on grade shall be 2 inches.

C. Piping shall comply with HUD UM 79a ABS and PVC plastic pipe and fittings for drain waste and vent installation standard.

PART 3 EXECUTION

3.1 INSTALLATION

A. Excavate and backfill as specified

1. Runs shall be as close as possible to those shown on Drawings.
2. Excavate to required depth and grade to obtain fall required. Grade soil and waste lines within building perimeter in direction of flow.
3. Bottom of trenches shall be hard. Tamp as required.
4. Remove debris from trench prior to laying of pipe.
5. Do not cut trenches near footings without consulting Architect.

B. Thermoplastic Pipe And Fittings

1. General - Piping and joints shall be clean and installed according to Manufacturer's recommendations. Break down contaminated joints, clean seats and gaskets and reinstall.
2. Above Grade - Locate pipe hangers every 4 feet on center maximum and at elbows.
3. Below Grade -
   a. Install in accordance with Manufacturer's recommendations and ASTM D 2321.
   b. Stabilize unstable trench bottoms.
   c. Bed pipe true to line and grade with continuous support from firm base.
      1) Bedding depth - 4 to 6 inches.
      2) Material and compaction to meet ASTM standard noted above.
   d. Excavate bell holes into bedding material so pipe is uniformly supported along its entire length. Blocking to grade pipe is forbidden.
   e. Trench width at top of pipe -
      1) Minimum - 18 inches or diameter of pipe plus 12 inches, whichever is greater.
      2) Maximum - Outside diameter of pipe plus 24 inches.
   f. Do not use back hoe or power equipment to assemble pipe.
   g. Initial backfill shall be 12 inches above top of pipe with material specified in referenced ASTM standard.
   h. Minimum cover over top of pipe not under building slab -
      1) 36 inches before wheel loading.
      2) 48 inches before compaction.

C. Install piping so cleanouts may be installed as follows

1. Where shown on Drawings and near bottom of each stack and riser.
2. At every 135 degrees of accumulative change in direction for horizontal lines.
3. Every 100 feet of horizontal run.
4. Extend piping to accessible surface. Do not install piping so cleanouts must be installed in carpeted floors. In such locations, configure piping so wall type cleanouts may be used.

D. Vent entire waste system to atmosphere. Join lines together in fewest practicable number before projecting above roof. Set back vent lines so they will not pierce roof near edge or valley. Vent line terminations shall be

1. 12 inches minimum above roof and 12 inches minimum from any vertical surface. Local Code Official may require additional height.
2. Same size as vent pipe.
3. In areas where minimum design temperature is below 0 deg F or where frost or snow closure may be possible -
   a. Vent line terminations shall be same size as vent pipe, except no smaller than 2 inches in diameter.
   b. Vents shall terminate 12 inches minimum above roof or higher if required by local codes.

E. Furnish and install firestopping at penetrations of fire-rated structures.

3.2 FIELD QUALITY CONTROL

A. Site Tests

1. Conduct tests for leaks and defective work. Notify Architect prior to testing.
2. Thermoplastic Pipe System -
   a. Before backfilling and compacting of trenches, cap all open ends and pressure test to 20 psi for 4 hours with no leaks. Correct leaks and defective work.
   b. After backfilling and compacting of trenches is complete but before placing floor slab, re-test as specified above. Uncover pipe and correct leaks and defective work. Re-backfill and compact and re-test.

END OF SECTION 221313

THIS PAGE INTENTIONALLY LEFT BLANK

SECTION 223430 - PLUMBING EQUIPMENT

PART 1 - GENERAL

1.1 Scope

1.2 All electrical equipment and controls shall be UL listed. Provide ASME approved temperature and pressure relief valves on all domestic heating equipment.

PART 2 - PRODUCTS

2.1 Domestic Water Heaters

A. Provide water heater of size, capacity and make as scheduled on the drawings. Heaters shall be fully warranted for a minimum of 3 full years after final acceptance of the building. Furnish heaters with the following accessories:

1. ASME combination temperature and pressure relief valve rated in excess of heater input. Run full size drain to atmosphere.
2. Automatic thermostat actuated controls with 100% shutoff.
3. Dual high-limit controls.
4. Tank drain.
5. Brass nipples for pipe connections.
6. Heater shall be factory insulated and sheet metal jacketed.
7. Water heater drain pan with drain as indicated in plumbing detail.
8. Secure water heater as indicated in water heater detail.

END OF SECTION 223430

THIS PAGE INTENTIONALLY LEFT BLANK

SECTION 224200 - PLUMBING FIXTURES

PART 1 - GENERAL

1.1 Use polished chrome-plated, adjustable brass P-traps with wall escutcheons at all exposed locations. Fixtures and supply fitting shall be of one manufacturer. Provide diaphragm type, polished chrome-plated flush valves with integral vacuum breakers and screwdriver stops. Provide fixture stops or valves ahead of all equipment or fixtures. After fixtures are set in place and secured to walls, caulk all around between fixtures and wall with either Dow Corning #780 or G.E. Construction Sealant white silicone caulking compound.

1.2 See Plumbing Fixture Schedule for Model Numbers and additional information.

PART 2 - PRODUCTS

2.1 Disposal:

A. Sink mounted, 120V.

B. Installation shall be by plumbing contractor.

C. Plumbing contractor shall provide all mounting and plumbing connections.

2.1 Lavatories and sinks:

A. All lavatories and sinks shall include supply stops, p-trap, and necessary mounting hardware.

B. Common area Lavs: without drain lever and stationary grid strainer.

2.1 Floor Drains

A. Toilet Rooms and Finished Areas: J. R. Smith 2005-A-P round nickel bronze strainer. Floor drain shall be compatible with flooring in area of installation.

B. Provide and install Trap Guard insert (or approved equal) in areas that do not receive condensate (year round) to prevent trap seal evaporation. Note that VTACs and Fan Coils will not have condensate while in heating mode and the respective condensate drains will need to have the Trap Guard insert provided and installed.

2.1 Hose Bibs (as needed)

A. Design Standard shall be Woodford Model 67 in exterior locations for freeze proof applications.

2.2 Water Closets

A. ADA Water Closet: 1.6 gpf maximum, with supply stop and supply hose. Seat shall be compatible with water closet provided.

B. Water Closet (floor mounted): 1.6 gpf maximum, with supply stop and supply hose. Seat shall be compatible with water closet provided.

C. See architectural details for all ADA requirements.

2.3 Urinal

A. With flush valve. Provide and install concealed floor mounted carrier for urinal.

2.4 Drinking Fountain

A. See architectural plans for mounting heights.

2.5 Mop Sink

A. Enameled cast iron service sink with anti-siphon faucet, steel spring rim guard and mop sink hose.

2.6 Roof Drains (Verify compatibility with roof material and structure)

A. J. R. Smith DX 1010-A-C-U. Provide extension sleeves, height as required by thickness of tapered insulation on all insulated roofs. Provide 6" wide, 3-pound sheet lead flashing around all roof drains. Set drains below insulation level and provide tapered insulation boards around drains. Provide sealing gasket.

B. Overflow Drain: Extend overflow drain pipe with flashing 2" above low point of roof.

2.7 Unit Supply Line Check Valve

A. See Plumbing Fixture Schedule.

END OF SECTION 224200

SECTION 230501 - GENERAL PROVISIONS

PART 1 - GENERAL

1.1 Scope:

A. Provisions of this section apply to all work specified in all sections under Division 23.

B. Mechanical Contractor shall provide green stickers and associated testing and adjustments for all gas-fired appliances (water heater, furnaces, etc.)

1.2 Examination of Premises: Visit the site, verify all measurements and job conditions, and pay all costs necessary to perform the work.

1.3 The Mechanical Contractor shall be licensed and hold a current contracting license that has been valid for a minimum of two years in the State of Utah as a Mechanical Contractor.

1.4 The Mechanical Contractor shall have a minimum of five years' experience installing commercial cooling and heating systems similar to those described in these specifications and provide a list of previous projects, including name of project and contact person names and phone numbers as a separate document in addition to the mechanical bid submitted by the General Contractor.

1.5 The Mechanical Contractor shall be able to bond work he is bidding to perform and shall provide a written statement from the bonding agency proposed to be used for this project as a separate document in addition to the mechanical bid submitted by the General Contractor. The bonding agency shall be one having a Best's insurance rating of A or A+. (Verify bonding with General Contractor)

1.6 Regulations, Permits, Fees, Charges, Inspections: (Verify with General Contractor)

A. Regulations: Comply with all applicable codes, rules and regulations. All materials and work must comply with local construction, mechanical, plumbing, electrical and fire codes. As a minimum, comply with the following: 1991 IMC, IPC, NEC, UFC, NFPA codes and all City and State codes.

B. Fees and Permits: Pay all connection, installation, use, development, etc., fees and/or charges. Obtain and pay for all required permits and licenses. Refer to Division 1.

C. Inspections: All work must be inspected and approved by local authorities. Prior to final approval, furnish the Architect with certificates of inspections and approvals by the local authorities in accordance with Division 1.

1.7 Drawings and Specifications:

A. Refer to Division 1 for information on submittals and shop drawings.

B. If a conflict exists between the drawings and specifications, promptly notify the Architect.

1.8 Record Drawings: Provide record drawings for all work under sections in Division 23. See Division 1 for detailed requirements covering preparation of record drawings.

1.9 Work and Materials: Unless otherwise specified, all materials must be new and of the quality specified. The workmanship shall be of a quality that is acceptable to the Architect and adheres to the standards of the trades. Contractor must staff the project with sufficient skilled workmen, including a fully qualified construction Superintendent, to complete the work in the time allotted. The Superintendent must be qualified to supervise all of the work in his work category.

1.10 Approvals of Materials and Equipment: Refer to Division 1 for description of material and equipment for prior approvals and substitutions.

1.11 Maintenance Manual:

A. Prior to completion of the project, compile a complete equipment and maintenance manual for all equipment supplied under sections of Division 23, as described in Division 1.

B. Manuals shall be bound in a three-ring binder. A preliminary submittal of the manual shall be made to the Architect 90 days after receiving approved submittals. Final submittal of the manual shall be made four weeks prior to substantial completion of the project.

1.12 Shop Drawings:

A. Engineer's Review: The Engineer shall review and take appropriate action on shop drawings, product data, samples and other submittals required by the contract documents. Such review shall be only for general conformance with the design concept and general compliance with the information given in the contract documents. It shall not include review of quantities, dimensions, weights or gauges, fabrication processes, construction methods, coordination with the work of other trades or construction safety precautions, all of which are the sole responsibility of the Contractor. The Engineer's review shall be conducted with reasonable promptness consistent with sound professional practice. Review of a specific item shall not indicate acceptance of an assembly of which the item is a component. The Engineer shall not be required to review and shall not be responsible for any deviations from the contract documents not clearly noted by the Contractor, nor shall the Engineer be required to review partial submissions or those for which submissions for correlated items have not been received.

B. Submit shop drawings in accordance with Division 1 and all data for all equipment provided under Division 23 within 30 days after award of contract. Index all submittals and reference to these specifications. Submit all shop drawings in a single batch at one time. Submit shop drawings for all equipment provided under Division 23, including the following:

1. Intake/exhaust hoods and caps, penthouses, curbs.

2. Insulation materials and finishes for all types of piping.

3. Ductwork, dampers, air distribution accessories, supports, grilles, registers, diffusers, louvers.

4. Heating equipment.

5. Fans.

6. Temperature control equipment.

7. Air balance contractor (Common Areas)

8. Access doors.

9. Access panels.

10. All other equipment as shown, indicated, specified, required and as directed by Architect.

1.13 Equipment Purchases: Arrange for purchase and delivery of all materials and equipment within 15 days after approval of submittals.

1.14 Cooperative Work:

A. Correct without charge any work requiring alteration due to lack of proper supervision or failure to make proper provision in time. Correct without charge any damage to adjacent work caused by the alteration. See Division 1 for additional requirements.

B. Cooperative Work Includes:

1. General supervision and responsibility for proper location, rough-in and size of work related to Division 23 but provided under other divisions of these specifications.

2. Installation of sleeves, inserts and anchors bolts for work under sections in Division 23.

3. Electrical work as specified herein. Refer to Division 26 for requirements.

1.15 Substitutions:

A. Where Manufacturer=s names appear, other Manufacturers may be substituted upon obtaining written approval of Architect **at least 10 days prior to opening of bids**. The contractor will be required to complete and sign a AProposed Substitution Request Form@ that will be reviewed by the Architect, Engineer, and Owner. The submission of the AProposed Substitution Request Form@ shall be **at least 10 days prior to opening of bids**.

B. Any prior approval of alternate equipment does not automatically exempt the supplier from meeting the intent of these specifications. Failure to comply with the operational and functional intent of these specifications may result in the total removal of the alternate system at the expense of the contractor.

1.16 Guarantee: Guarantee all material, equipment, and workmanship for all sections under Division 23 in writing to be free from defects of material and workmanship for one year from date of final acceptance as outlined in Division 1. Replace without charge any material or equipment proving defective during this period. The guarantee shall include performance of the equipment under all conditions of load, installing any additional items of control and/or protective devices as required and the replacing of any refrigerant lost.

1.17 Mechanical Wiring:

A. Provide all temperature control wiring, all interlock wiring, and equipment control wiring for the equipment that is to be provided under this Division unless specifically shown on electrical drawings.

B. All wiring shall be not less than No. 14 insulated, color coded wire in electrical metallic tubing. Installation shall comply with Division 26.

C. The following schedule is intended to summarize the division of work material responsibilities between the Mechanical Contractor and the Electrical Contractor.

Item	Furn. By	Set By	Power Wiring	Control Wiring
Equipment motors	MC	MC	EC	--
Motor starters, contactors and overload heaters	MC*	EC	EC	MC
Fused and unfused disconnect switches	EC	EC	EC	--
Manual operating switches, multispeed switches, push-button stations and pilot lights	EC	EC	EC	EC
Control relays and transformers	MC	MC	EC	MC
Thermostats, time switches**	MC	MC	EC	MC
Smoke detectors	MC	MC	EC	CC
Motor and solenoid valves, damper motors,	PE and EP			
switches	MC	MC	--	MC
Refrigeration equipment controls	MC	MC	EC	MC

MC = Mechanical Contractor

EC = Electrical Contractor

CC = Controls Contractor

** Motor-drive units which are controlled from line voltage automatic controls such as line voltage thermostats, float switches or time switches which conduct full load current of the motor shall be wired for both power and control circuit under the electrical contract. However, if the control device does not conduct full load current, then the responsibility shall be that set forth in the above schedule. (Example: A 208 volt, 3-phase, 3-wire motor requires 120 volt control.) Electrical Contractor shall furnish a 120 volt circuit for control and 208 volt circuit for power and wire the power circuit. Mechanical Contractor shall wire the control circuit.

D. Under this section provide all shop drawings and wiring diagrams complete with all connection details. Wiring diagrams must be free from confusing optional methods that do not apply. Wiring diagrams must be complete with all necessary information and must correctly indicate the conditions of this specific job.

E. Under this section be responsible for the checking and testing of all controls and interlocks for a complete and satisfactory operating system.

F. Before ordering motors, equipment, etc., verify the available voltage and phase with the electrical trades.

1.18 Electrical Work:

A. Electrical wiring, including power wiring and control wiring (except as otherwise specified under Automatic Temperature Controls), all raceways, wiring, outlet and junction boxes, and labor for installation of the wiring and equipment shall be included in Electrical Division 26 of the specifications.

B. Under the Automatic Temperature Control section of these specifications, furnish and install all wiring, conduit, electric automatic temperature control devices, thermostats, relays, automatic control switches and pilot lights. See the Automatic Temperature Control Section, for additional detailed information.

C. All loose starters and control devices for equipment furnished under Division 23 (except as otherwise specified under Automatic Temperature Control Section) are to be furnished under that particular section of Division 23 and installed under the electrical division.

D. Contractor shall provide all shop drawings and wiring diagrams complete with all connection details. Wiring diagrams must be free from confusing optional methods that do not apply. Wiring diagrams must be complete with all necessary information and must correctly indicate the conditions of this specific job.

E. Contractor shall be responsible for the checking and testing of all controls and the interlocks for a complete and satisfactory operating system.

F. Before ordering any motors and equipment. Verify the available voltage and phase for all motors with the Electrical Contractor.

G. Submit a complete list of all motors prior to final closeout of job indicating the locations, horsepower, voltage, phase and amperage draw of each motor.

H. All field wiring and equipment must conform to the applicable sections of the Electrical specifications, Division 26.

1.19 Welding Codes and Standards: All welding and other criteria covered by this specification shall be in accordance with the following code:

ASME Boiler and Pressure Vessel Code

Section IX ANSI Code for Power Piping: B31.1

PART 2 - PRODUCTS

2.1 Machinery Drives:

A. Use V-belts designed for 150% of capacity for all belt drives. For multiple belt drives, use matched sets, so marked at the factory.

B. On drives with not more than two belts, provide adjustable pitch motor sheaves with the midpoint of the adjustment range such as required to achieve the specified fan capacity.

C. On motors with drives with more than two belts, furnish nonadjustable sheaves, providing the specified fan capacity.

2.2 Machinery Accessories:

A. Lubricating Devices: Provide all oil level gauges, oil pressure gauges, grease cups, grease gun fittings, as required by the equipment. Extend all lubricating fittings to readily accessible locations.

B. Guards: Provide totally-enclosed OSHA type belt guards for all rotating equipment. Design guards to be readily removable for access to belt drives.

2.3 Equipment Design and Installation:

A. Uniformity: Unless otherwise specified, provide all equipment of same type or classification by the same manufacturer.

B. Design: Design all equipment in accordance with ASME, AGA, UL and other applicable technical standards as follows:

Electric appliances - UL labeled

Fans - AMCA rated and stamped

Cooling equipment - ARI certified

Fire dampers, smoke dampers, combination fire and smoke dampers - UL listed

PART 3 - EXECUTION

3.1 Verification of Dimensions:

A. Scaled and figured dimensions are approximate only. Before proceeding with work, carefully check and verify dimensions at site, and be responsible for properly fitting equipment and materials together and to the structure in spaces provided.

B. Drawings are essentially diagrammatic and many offsets, bends, special fittings and exact locations are not indicated. Carefully study drawings and premises in order to determine best methods, exact locations, routes, building obstructions, and install apparatus and equipment in available locations. Install apparatus and equipment in manner and in locations to avoid obstructions, preserve headroom, and keep openings and passageways clear.

3.2 Cutting and Patching: Cut work and patch per Division 1 as necessary to properly install the new work. As the work progresses, coordinate necessary openings, holes, chases, etc., in their correct location. If the required openings, holes and chases are not in their correct locations, make the necessary corrections at no cost to the Owner. Avoid excessive cutting and do not cut structural members without the consent of the Architect. Patching by General Contractor at Mechanical, Plumbing or Fire Protection Contractor's expense. Include as a part of the work under this contract all structural framing required by penetrations through the roof and necessary steel to support ducts and pipes between structural steel unless shown on the structural drawings.

3.3 Closing-in of Unfinished Work: Cover no work until inspected, tested and approved. Where work is covered before inspection and test, uncover it, and when inspected, tested and approved, restore all work to original proper condition.

3.4 Accessibility:

A. Install valves, dampers, traps, control devices or other specialties requiring reading, adjustment, inspection, repairs, removal or replacement conveniently and accessibly throughout the finished building. Where any of these devices are shown on the contract drawings to be installed above any inaccessible ceiling, the Mechanical Contractor shall furnish access doors or panels as required.

B. All access doors or panels in walls and ceilings required for access to control devices, traps, valves and similar devices are to be furnished and installed as part of the work under this section. Provide type as specified under Division 8.

C. Provide ducts which pierce a fire separation with fire dampers of same fire rating as the separation.

D. Refer to drawings and "Finish Schedule" for type of wall and ceiling in each area and for rated construction.

E. Coordinate work of various sections to locate valves, traps, and dampers with others to avoid unnecessary duplication of access doors.

3.5 Roof Flashings: Flash and counterflash all piping, conduits and ductwork penetrating roofing membrane with flashing per roofing manufacturer's recommendations. Refer to architectural drawings for detailing of duct and pipe penetrations through roof.

3.6 Equipment Rough-in:

A. Rough in all equipment and fixtures as designated on the drawings and in the specifications. The drawings indicate only the approximate location of rough-ins. The exact rough-in locations must be determined from large-scale certified drawings. The Contractor shall obtain all certified rough-in information before progressing with any work for rough-in final connections.

B. Be responsible for providing all outlets and services of proper size at the required locations.

C. Minor changes in the contract drawings shall be anticipated and provided for under this division of the specifications.

D. Rough-in only (unless otherwise designated on the drawings) shall include the following:

1. Mechanical: Provide all services as indicated and required, including all ductwork, piping and valves. Cap all ductwork stub-outs in a manner suitable for future extension.

3.7 Owner-Furnished and Other Equipment:

A. Rough-in only for all Owner-furnished equipment (see Division 1) and all equipment furnished under other sections of the specifications, except as otherwise specified and/or noted on the drawings.

B. Rough-in requirements shall be as outlined in the preceding paragraph titled "Equipment Rough-In."

3.8 Equipment Final Connections:

A. Provide all piping and duct final connections for all equipment under Division 23 as required herein specified and indicated on the drawings.

B. Air Conditioning, Heating, and Ventilating: Provide final connections complete with necessary valves, drains, unions, flanges and duct connections for equipment furnished and installed under other sections of the specifications, except as otherwise designated. Included under the HVAC sections of the specifications are the final connections to the following:

1. Condensate piping from air conditioning equipment.

2. Supply, return, relief, outside air and exhaust duct connections for all equipment including exhaust fans.

3. Piping connections for all equipment.

3.9 Machinery Drives: After tests have been performed on the air conditioning and air handling systems, make without cost not more than two changes in the size of the nonadjustable sheaves to obtain the required air quantities.

3.10 Machinery Accessories:

A. Application: Do not install any equipment in an application not recommended by the manufacturer.

B. Installation: Align, level and adjust all equipment for proper operation. Install so connecting and disconnecting of piping and accessories can readily be done and so all parts are readily accessible for inspection, service and repair. Install equipment in accordance with manufacturer's recommendations.

3.11 Pipe and Equipment Supports:

A. Where supports, foundations, stands, suspended platforms for machinery, tanks, or other equipment are indicated or specified, perform the following:

1. Locate support members to avoid equipment strains and interference with piping connections, tube pulling or other maintenance operations.

2. Mount power-driven equipment on common base with driver.

B. Ceiling or Wall Supports: Use suspended platform, strap hangers, bracket or shelf, whichever is most suitable for equipment and location. Construct of structural steel members, steel plates, rods or pipe as required. Cross-brace and fasten to building structure or inserts in an approved manner.

C. Steel Work: Neatly fabricate and erect steel work with burrs and welding spatter ground off. Paint after fabrication with a rust-inhibitive primer.

D. Roof Mounted Equipment (Steel Supported): Provide curbs and flashings for metal support structures as shown in the latest SMACNA manual for roof supports.

3.12 Cleanup:

A. In addition to cleanup specified under Division 1, thoroughly clean all parts of the equipment. Where exposed parts are to be painted, thoroughly clean off any splattered construction materials and remove all oil and grease spots. Wipe the surface carefully and scrape out all cracks and corners.

B. During the progress of the work, keep the premises clean and free of debris.

3.13 Painting:

A. Except as otherwise specified or indicated in the architectural drawings and/or specifications, paint all exposed unfinished metal with one coat of rust-inhibiting primer and a finish coat as directed by architects representative and as described in the contract documents. (Galvanized ductwork and factory painted equipment shall be considered as having primed surface.)

B. Finished painting is specified under Division 9.

3.14 Objectionable Noise and Vibration: Construct and brace the metal partitions, ducts and sheet metal housings to prevent vibration or rattling when systems are in operation. Install connections to equipment so noise and vibration will not reach the conditioned area through ducts, piping, conduit, sheet metal work, or the building structure. Provide power-driven equipment suspended from the structure with spring type isolation.

3.15 Welding:

A. Procedures:

1. All procedures and welders must be qualified in accordance with the requirements of Section IX, ASME Boiler and Pressure Vessel Code and ANSI code for power piping B31.1. Procedure qualification test records and acceptance shall be submitted with the welding procedure prior to the start of fabrication.

2. Architect's inspector or authorized representative will review performance qualification records of individual welders.

B. Welding Processes: The following welding processes are permitted, provided that the procedure is qualified in accordance with Section IX, ASME Boiler and Pressure Vessel Code.

1. Manual shielded metal-arc.

2. Gas tungsten-arc.

3. Other welding processes may be used providing they are qualified in accordance with Section IX, ASME Boiler and Pressure Vessel Code.

C. Restrictions: Weld bevel preparations shall be provided on all welding fittings and shall be machined or ground to remove all discoloration if flame or arc cut.

D. Welding Filler Material:

1. A filler material control procedure shall be submitted to Owner for review and acceptance prior to performing any welding.

2. All shielded metal-arc welding shall be performed using low-hydrogen type electrodes such as E 7018.

END OF SECTION 230501

SECTION 230593 - AIR SYSTEM BALANCING (Common Areas)

PART 1 - GENERAL

1.1 The Contractor shall include in his bid the services of a certified independent air balance and testing agency. The testing agency shall be one which specializes in the balancing and testing of heating, ventilating and air conditioning systems, to balance, adjust and test air-moving equipment and air distributing or exhausting systems as herein specified. All work shall be done under direct supervision of a qualified heating and ventilating certified technician employed by the agency.

1.2 Perform all of the air system balancing specified in this section as part of the contract to be paid for by the Mechanical Contractor.

PART 2 - PRODUCTS

2.1 Materials: All instruments used by this agency shall be accurately calibrated and maintained in good working order. If requested, conduct the tests in the presence of the Architect and/or the Mechanical Engineer responsible for the project and/or his representative. Do not begin air balance and testing until system has been completed and is in full working order. Put all heating, ventilating and air conditioning systems and equipment into full operation and continue the operation of same during each working day of testing and balancing. Submit within 15 days after receipt of the contract, 7 copies of submittal data for the testing and balancing of the air conditioning, heating and ventilating systems. The air balance agency shall provide proof of having successfully completed at least five projects of similar size and scope and shall be a certified member of Associated Air Balance Council or NEBB. Submit the test and balance contract to the Architect for approval within 90 days after the Air Conditioning Contractor has received his contract to proceed with the air conditioning installation to allow the air balance agency to schedule this work in cooperation with other trades involved and comply with the completion date.

PART 3 - EXECUTION

3.1 Air Balancing: Upon completion of the air conditioning system, the air balance agency shall perform the following test, compile the test data, and submit five (5) copies of the complete test data to the Contractor for forwarding to the Owner, Architect and Engineer for review and approval.

3.2 Testing Procedure: The air balance agency shall perform the following tests, and balance system in accordance with the following requirements:

A. Test and adjust blower RPM to design requirements to within 10% of design.

B. Test and record motor full load amperes.

C. Make pitot tube traverse of main supply ducts and obtain design CFM at fans when deemed necessary by Engineer.

D. Test and record system static pressure, suction and discharge.

E. Test and adjust system for design CFM outside air.

F. Test and adjust system for design CFM recirculated air.

G. Test and record entering air temperatures (DB heating and cooling).

H. Test and record entering air temperatures (WB cooling).

I. Test and record leaving air temperatures (DB heating and cooling).

J. Test and record leaving air temperatures (WB cooling).

K. Adjust all main supply and return air ducts to proper design CFM.

L. Adjust all zones to proper design CFM supply and return.

M. Test and adjust each ceiling diffuser, grille and register to within 10% of design requirements.

N. Each grille, diffuser and register shall be identified as to location and area on a set of plans included with report.

O. Identify and list size, type and manufacture of diffusers, grilles, registers and all tested equipment. Use manufacturer's ratings on all equipment to make required calculations.

P. Reading and tests of diffusers, grilles and registers shall include required velocity, required CFM, and test resultant CFM after adjustments.

Q. In cooperation with the control manufacturer's representative, setting adjustments of automatically operated dampers to operate as specified, indicated and/or noted.

R. Adjust all diffusers, grilles, and registers to minimize drafts in all areas.

S. As part of the work of this contract, the Air Conditioning Contractor shall make any changes in the pulleys, belts and dampers or the addition of dampers required for corrected balance as recommended by air balance agency, at no additional cost to Owner. The Contractor shall furnish the necessary labor to assist the testing agency to complete its work.

T. Test and balance agency shall include an extended warranty (in addition to the one year guarantee period) of 90 days after completion or resetting of any outlet, supply air fan or exhaust fans as listed in test report. The agency shall provide technicians to assist the Engineer in making any tests he may require during this period of time.

END OF SECTION 230593

SECTION 230594 - TESTING

PART 1 - GENERAL

1.1 This section describes the labor, materials and services required for the testing of all systems.

PART 2 - EXECUTION

2.1 Test Procedures

A. Make tests before the rough work is covered. The system may be tested in parts if approved.

B. When the tests show the work in any way defective, remove defective material or equipment from the premises and retest.

C. Make piping tests on all piping as required by code.

D. Coil Condensate Drain Piping: Fill to highest point of system for (4) hours.

2.2 Testing out

A. Check out and test operate all equipment installed under heating, ventilating and air conditioning sections of these specifications, including a check of all work performed under the Electrical and Mechanical divisions in conjunction with the equipment installed under all sections of this division.

1. Check electrical work to see that the power is properly supplied to all electrical motors and that all electric controls are properly hooked up in the control circuits. Furnish a list of the voltage and current readings taken under load of all motors.

2. Check all work and see that all controls are in good working order and properly adjusted. After the equipment has been properly adjusted, start up and run all equipment enough to determine that the controls and equipment are all operating properly and that the installation is complete. Balancing per 23 0593 shall be accomplished as described under Air System Balancing, Section 23 0593.

3. When the test or observations show that the work is in any way defective or at a variance with the specification requirements, immediately make all changes necessary to correct the work and remedy the defects to the satisfaction of the Architect. Remove any defective material or equipment from the premises. In the event the Contractor does not remedy all defects and make all changes demanded by the Architect within a reasonable time, the right is reserved to have the defects remedied or changes made and to charge the cost of the work against the account of the Contractor.

4. Furnish all appliances, equipment and labor for the tests and meet all expenses of the tests.

2.3 Final Tests

A. Before acceptance and at a time designated, make a complete test to demonstrate that the air quantities are balanced for even temperatures throughout, that all controls are adjusted

and that, in general, the system is placed into proper operation. Furnish a skilled operating engineer for a period of at least eight hours, at time or times designated by the Owner, to instruct the Owner's representative in the operation and maintenance of the equipment.

END OF SECTION 230594

SECTION 230933 - AUTOMATIC TEMPERATURE CONTROLS

PART 1 - GENERAL

1.1 Scope

A. The work included in this section shall consist of all labor, transportation, materials and equipment necessary for the installation of a complete system of automatic temperature control for this project in accordance with the drawings and as specified herein.

B. Thermostat used shall be capable of controlling gas heating, heat pump heating, and DX cooling for furnaces, fan coils, etc.

PART 1 - PRODUCTS

1.1 Miscellaneous Control Devices

A. Damper Motors: On all damper motors provide flexible, nonmetallic diaphragm operators with sufficient power to position the dampers accurately in response to the controller. Damper motors on modulating outside air shall have a pilot positioner.

B. Automatic Dampers: Parallel or opposed blade control dampers as required, equal to Johnson Proportion/Aire low leakage dampers; 13 gauge galvanized steel formed damper frames for extra strength with mounting holes for flange and enclosed duct mountings. Dampers over 48" wide shall be standard modules with interconnecting hardware. Blade bearings of oil-impregnated sintered bronze with 1/2" zinc-plated steel shafts. All blade linkage hardware or corrosion-resistant finish and readily accessible for maintenance after installation. Provide synthetic elastomer seals.

C. Wall Mounted Wall Thermostats: Mount all room thermostats where shown on the plans. UFAS height will apply. All thermostats used shall be checked for compatibility with the associated equipment prior to installation.

PART 2 - EXECUTION

2.1 Work Included in Other Sections of the Specifications

A. All electrical wiring (by ETC).

B. Mounting of dampers in ductwork, including the furnishing of required blank-off plates to reconcile modular damper sizes to duct sizes (by MTC).

Abbreviations:

ATC = Automatic Temperature Controls Trades Contractor

MTC = Mechanical Trades Contractor

ETC = Electrical Trades Contractor

2.2 Temperature Control Raceways - Division 26

A. Low voltage wiring will not be required to be in a raceway. All temperature control raceways will be provided and installed by Division 26 Contractor. (Exterior locations as indicated on Mechanical Plans). Raceway system shall be complete and include but not be limited to all required conduit, boxes, connectors etc. Division 26 Contractor shall coordinate all required locations for all systems.

END OF SECTION 230933

THIS PAGE INTENTIONALLY LEFT BLANK

SECTION 231000 - FUEL GAS SYSTEM (NATURAL GAS)

PART 1 - GENERAL

1.1 Use Schedule 40 black steel pipe with extra-heavy, black malleable iron screwed fitting for all gas lines (low pressure less than 1 pound) for piping 1-1/2" and smaller. For gas lines 2" and larger, use Schedule 40, black steel pipe with butt welding. Use flanges on piping 2" and larger and unions on piping 1-1/2" and smaller. For all pipe below grade, exterior of the building, use polyethylene or polyvinyl chloride (PVC) pipe for gas distribution.

1.2 Paint all gas piping on exterior of building with weather resistant paint.

1.3 Provide permanent tag indicating which apartment is served by each gas meter.

1.4 Regulations: All materials, equipment and installation must comply with the latest publication of all applicable codes, rules and regulations, local gas utility company, all of which must be considered a part of these specifications, including the requirements of the city and state.

International Building Code

International Plumbing Code

National Fire Protection Association Standards

National Electrical Code

Utah State Department of Health

International Mechanical Code

National Fire Protection Association

DOT CFR-49, 190, 191, 192.

PART 2 - PRODUCTS (Shall meet the standards set forth in IFGC Section 403)

(All gas valves, flanges and fittings shall be marked for identification.)

2.1 Steel Pipe: Schedule 40 black steel conforming to ASTM A53, Grade A or B, seamless welded pipe.

2.2 Fittings:

A. Steel Pipe 1-1/2" and Smaller: Extra-heavy black malleable iron conforming to USAS B16.3, 150 psi SWP.

B. Steel Pipe 2" and Larger: Black steel seamless welding fittings conforming to USAS B16.9 and ANSI B16.25, 150 psi SWP.

C. Steel Unions: Black malleable iron, screwed connections, ground iron-to-bronze seat, conforming to ASTM A47, 250 psi SWP.

2.3 Valves:

A. Piping 1-1/2" and Smaller: Resun R-1430 or Rockwell-Nordstrom #142 lubricated plug valve with #555 lubricant for natural gas service with UL or AGA rating.

B. Piping 2" and Larger: Resun R-1431 or Rockwell-Nordstrom #143 lubricated plug valve with #555 lubricant for natural gas service with UL or AGA rating.

C. At Equipment Connection: Milwaukee BB2-100 Butterball, bronze body, threaded ends, 1/2" through 2".

2.4 Gas Service Pressure Regulators: Fisher series S100 or S200 diaphragm actuated pressure regulator suitable for natural gas service. Orifice to be sized to regulate cubic feet per hour at inlet and outlet pressures as scheduled on the drawings or as required by system.

PART 3 - EXECUTION

3.1 Install all piping in the building aboveground. Install no gas piping in or under concrete floors or in masonry walls. Where gas lines are indicated to be sleeved below walks and rise on inside of building, install in accordance with standard city gas sleeve details.

3.2 Install tracer wire parallel to all plastic pipe within 6" of pipe and terminate aboveground at ends. All tracers on a single system shall be connected at their points of intersection.

3.3 Supervise the proper installation of pressure regulator by the utility contractor.

3.4 Extend gas lines from meter and/or pressure regulators to all equipment and connections requiring gas. Underground piping shall be installed with a minimum of 24" cover with 6" of shading material all around, not to exceed #4 sieve (sand). Provide a minimum of 8" clearance from all underground structures. Verify burial depth with local utility company and Corporation Commission.

3.5 Install gas pipe with suitable dirt legs at equipment connections.

3.6 Install accessible valve and union at each equipment connection.

3.7 Install valve and union with capped gas at all equipment stub-outs.

3.8 Coordinate location of valved outlets for mechanical equipment with Mechanical Contractor.

3.9 Install chrome-plated escutcheon plates at all wall penetrations exposed to view.

3.10 Plug each gas outlet, including valves, with threaded plug or cap immediately after installation and retain until installation is complete.

3.11 Install shutoff valve outside at entry into each building.

3.12 Aboveground pipe shall be electrically bonded and grounded as required by NFPA 54, page 3.14.

3.13 Coordinate piping with mechanical ductwork, fire sprinkler pipes, conduits, etc.

3.14 All system regulators shall be flow and lockup tested before light-up per CFR 192.197.

A. Pressure Test:

1. For systems at 2 psig or less, requirements are 60 psig for underground polyethylene or PVC pipe up to the regulator and system pipe in building. For ease of testing and at the option of Contractor, by spooling through where the regulator is to be installed, the entire system can be pressure tested in one continuous test at 60 psig up to the shutoff valves with the equipment disconnected and valve plugged and capped. Hold for four (4) hours with no pressure drop.

2. Upon completion of the installation and assuring that the system will pass the pressure test and meet all the requirements of DOT CFR-49.192, call the for final inspection and pressure test before covering work. Contractor shall furnish Architect with certificates of inspection and approvals by local gas company.

3.15 Submit maintenance data and parts lists for system materials and products. Include this data, product data, shop drawings, and record drawings in maintenance manual.

3.16 Welding procedure shall be by a qualified welder per CFR 192.225. Contractor shall furnish Architect with welder's qualifications and no welding shall be done until authorized. Welds shall be inspected with records maintained and furnished to Architect.

END OF SECTION 231000

THIS PAGE INTENTIONALLY LEFT BLANK

SECTION 232300 - REFRIGERANT PIPING

PART 1 - GENERAL

1.1 Furnish and install refrigerant piping between condensing unit and evaporator coil. Make final connections to all equipment.

1.2 Piping shall be factory manufactured line sets with brazed joints.

PART 2 - PRODUCTS

2.1 Copper line sets with insulation as indicated below.

PART 3 - EXECUTION

3.1 Refrigerant lines shall be installed by workmen skilled in the installation and testing of refrigerant piping and refrigerant equipment.

3.2 All work shall conform to standard engineering practice as recognized by ARI and the American Society of Heating, Refrigerating and Air Conditioning Engineers, and all piping, installation and testing shall conform to the applicable requirements of ANSI B9.2.

3.3 All refrigerant lines shall be properly pitched and shall have oil traps properly sized, located and installed, complete with properly sized double suction risers, to ensure that oil in any part of the system will be able to return to the compressor under minimum system operating conditions. Manufacturer installation directives shall be followed for each piece of equipment.

3.4 All field fabricated pipe shall be cut smooth and square with an approved type of pipe cutter. Pipe shall be reamed, cuttings carefully removed and piping thoroughly cleaned of all dirt and oil before brazing.

3.5 All piping shall be thoroughly tested for leaks and proved tight before charging. Evacuate system to not less than 500 microns with oil submerged vacuum pump and special vacuum hoses. Hold for two hours. Charge shall be calculated and a volume charging cylinder or electronic scale shall be utilized. Affix a tag to each system showing type of refrigerant and total pounds in the system.

3.6 Provide boot at each refrigerant wall penetration. See detail for model number and additional information.

3.7 Cleaning: Clean all fittings before installation.

3.8 Insulation:

A. Insulate all refrigerant suction piping with 1/2" thick flexible foamed plastic closed cell pipe insulation. Insulation shall have a "K" factor of not more than .26 at 70EF and a water vapor transmission rate of 0.1 perm-inch or less in conformance with ASTM C-177 and ASTM C-355 water method. When insulation is exposed to sunlight, wrap with polytape with one-third overlap.

B. Install insulation by slitting tubular sections and applying over piping.

C. Paint all insulation and/or tape exposed to the exterior with ultraviolet resisting paint.

END OF SECTION 232300

THIS PAGE INTENTIONALLY LEFT BLANK

SECTION 233114 - SHEET METAL DUCTWORK (LOW PRESSURE)

PART 1 - GENERAL

1.1 Scope: Furnish all labor, materials, equipment and services necessary for the installation of all low pressure sheet metal duct systems as herein described and as indicated on the drawings. Each system shall be complete with all accessories, etc., as described herein and in other sections of these specifications.

1.2 Galvanized Sheet Metal: For all ductwork except as otherwise specified.

PART 2 - PRODUCTS

2.1 Galvanized Ductwork: Galvanized, prime-grade, lock-forming, quality steel (LFQ) having galvanized coating of 1-1/4 ounces total for both sides of 1 square foot of a sheet. Cross-break all sides of ducts.

2.2 Longitudinal Seams: Pittsburgh lock groove, hammered flat. Tape all transverse joints of supply, return and exhaust ducts with open weave fiberglass, canvas and Arabol, or reinforced Hardcast.

2.3 Turning Vanes:

A. Sheet Metal Vanes: Factory fabricated, single thickness, galvanized sheet metal with airfoil contour. Shop fabricated duct turns must be submitted for approval prior to processing any work on project.

2.4 Flexible Duct: Flexible, preinsulated, vinyl coated fiberglass with corrosion-resistant, steel spiral reinforcing, designed for low velocity application. All duct, insulation and adhesives shall be fire and smoke resistant in conformance with NFPA 90A and UL 181 for Class 1 duct. Duct shall be Thermaflex Type M-KC as manufactured by Flexible Tubing Co. or approved.

2.5 Flexible Connections: 24-ounce glass fabric that is flameproof, airtight, ozone resistant, and a minimum of 3" wide with 3" of metal on each side of 3" of fabric using a grip lock seam, Duro-Dyne "Durolon".

2.6 Manual Dampers: Minimum of 16 gauge galvanized steel, maximum of 8" blade, opposed blade type, with manual quadrant.

2.7 Manual Quadrants: On all low pressure dampers Ventlock #641 in uninsulated ducts.

2.8 Access Doors:

A. Uninsulated Ducts: Construct access doors of galvanized sheet metal gauges heavier than duct with rolled edges, hinges, and Ventfabrics, Inc. "Ventlock" #260 latch. Make airtight with felt strips or neoprene gasketing and provide 1" x 1" x 1/8" galvanized iron frame for installation in ductwork.

2.9 Access Panels and Access Openings in Ductwork: Galvanized, sheet steel, 2 gauges heavier than the duct with rolled edges, felt strips or neoprene gasketing and attached to duct with sheet metal screws a maximum of 6" on center.

2.10 Fire Dampers: Furnish and install access panels as hereinbefore described to meet the requirements of the code. All fire dampers must be constructed in accordance with Underwriters' Laboratories and city code requirements. Dampers shall be of the type with the open damper out of the airstream for 90% free area.

2.11 Duct Supports:

A. Ducts 47" and Smaller: 14 gauge steel hanger straps 1" wide riveted to seams of ducts, maximum of 6'-0" on center. Alternate support for horizontal ducts must be by (2) 1/4" bolts or 2 or more #14 sheet metal screws.

B. Ducts over 48" in Width: Support from trapeze hanger consisting of vertical steel rods and angle iron frames.

2.12 Duct Construction: All duct construction must conform to local code or to the SMACNA Duct Construction Standards Manual, whichever is more stringent.

PART 3 - EXECUTION

3.1 Fabrication: Fabricate all ductwork and install using skilled mechanics in strict conformance with the SMACNA Manual. Provide supplemental stiffening as required to prevent drumming and provide a structurally sound assembly.

3.2 Construction: Construct all fittings, elbows, and transitions to provide a minimum of noise and resistance. Where space permits, use elbows with a minimum radius of 1-1/2 times the width (or depth). Where space conditions necessitate abrupt changes in direction (or as otherwise indicated), use square elbows with double radius turning vanes. Transitions increasing in the direction of airflow shall not change greater than 1" in 7" and transitions decreasing in the direction of airflow shall not change greater than 1" in 5".

A. Ductmate and Ward duct connectors are allowed when fabricated and installed in strict compliance with manufacturer's instructions.

3.3 Turning Vanes: (Common Areas) Provide single thickness turning vanes in all 90E square elbows and elsewhere as indicated. Use acoustical turning vanes where indicated.

3.4 Taping: Tape all cross-joints in concealed or insulated sheet metal ductwork with Arabol and canvas or reinforced Hardcast.

3.5 Weatherproofing: Make all ductwork exposed to weather weathertight, seal all joints with a minimum of 2 coats of asphalt-based roofing compound painted with aluminum paint.

3.6 Duct Openings: Construct duct openings at grilles or registers so that the plaster will not crack when the registers are attached.

3.7 Painting: (Common Areas) Paint the inside of all supply, return and exhaust ducts and dampers one coat of dead black paint whenever visible through the openings.

3.8 Manual Dampers: Provide manual dampers in each supply duct to outlet/inlet and elsewhere as indicated. Provide locking quadrants with memory stop.

3.9 Measurements: Before fabrication, check all ductwork with the building construction for dimensions, locations, clearances, etc. Make up duct with any necessary variations to conform to the details of the construction of the building, to suit the space available, and to fit the equipment furnished. The entire duct system must be substantially constructed, rigidly erected and free of any duct vibration or noises.

3.10 Flashing: Flash all ducts passing through the roof, floor or through exterior walls.

3.11 Testing and Balancing: See Testing and Air Systems Balancing.

3.12 See Mechanical notes on Mechanical Plans for level of air leakage testing for individual residential units.

END OF SECTION 233114

SECTION 233300 - DUCT SPECIALTIES

PART 1 - GENERAL

1.1 Scope: Grilles, registers, and diffusers shall be furnished and installed where shown. They shall be of the size and model indicated. Carnes, J&J, Krueger, Metal*Aire, Nailor, Titus, Tuttle & Bailey, Manufactured Air Products.

A. Shall be rated for air flow indicated on plan.

B. Shall be compatible with ceiling materials.

C. Sidewall design standard shall be: Nailor 61-DV-O with opposed blade damper.

D. Ceiling design standard shall be: Nailor 6200 with opposed blade damper.

E. T-grid supply grille (as needed): Titus TMS.

F. T-grid return grille (as needed): Titus PXP.

1.2 Installation: All grilles, registers and diffusers shall be set flush and true to the wall or ceilings to prevent air leakage around the edges.

1.3 Provide plaster frames for outlets in plaster or gypsum board.

1.4 Finish: All units must be factory finished. Provide finish and color as indicated on the drawings or as otherwise directed by Architect.

PART 2 - PRODUCTS

2.1 Fire Dampers

A. Construct all fire dampers, smoke dampers, and combination smoke and fire dampers in accordance with code requirements. Dampers shall be low leakage rated, welded construction, sized with open damper out of airstream for a minimum of 90% free area. Install in all fire-rated and smoke separations as shown on the plans. Installation shall be in accordance with manufacturer's and UL requirement

END OF SECTION 233300

THIS PAGE INTENTIONALLY LEFT BLANK

SECTION 235417 - AIR CONDITIONING EQUIPMENT

PART 1 - GENERAL

1.1 SUMMARY

A. Furnish and install air conditioning systems complete with remote air-cooled condensing units, of the type, size and capacities indicated. Each system shall be complete with all equipment, filters, piping, insulation, controls, relays, interlocks and connections as required.

B. Furnish and install self-contained, remote air-cooled condensing units as noted on the drawings.

C. Furnish heat pumps with outdoor units, indoor fan coils, etc as indicated in the Mechanical Plans, Schedules and Details.

D. Furnish Heat Recovery Units as indicated in the Mechanical Plans, Schedules and Details.

PART 2 - PRODUCTS

2.1 MATERIALS

A. Provide Heat Pump Systems as indicated in the Mechanical Plans, Schedules and Details.

B. Provide Furnace and Condensing Units as indicated in the Mechanical Plans, Schedules and Details.

C. Provide Heat Recovery Ventilators as indicated in the Mechanical Plans, Schedules and Details.

PART 3 - EXECUTION

3.1 INSTALLATION

A. Cooling Coil and Fan Coils

1. Install in conformance with manufacturer's recommendations.

B. Adhere to all manufacturer requirements.

END OF SECTION 235417

THIS PAGE INTENTIONALLY LEFT BLANK

SECTION 26 0500 - ELECTRICAL GENERAL PROVISIONS

PART 1 – GENERAL

1.1 RELATED DOCUMENTS:

A. Drawings and general provisions of Contract, including General and Supplementary Conditions and Division-1 Specification sections, apply to work of this section.

B. Architectural, Structural, Mechanical and other applicable documents are considered a part of the electrical documents insofar as they apply as if referred to in full. Contractor must review the entire set of plans and specifications. Reviewing only the electrical set is not acceptable.

1.2 DESCRIPTION OF WORK:

A. The extent of electrical work is indicated on drawings and/or specified in Divisions 26, 27 and 28 sections of the specification. Provide all labor, materials, equipment, supervision and service necessary for a complete electrical system. Work includes, but is not necessarily limited to, the following items.

	ITEM	SECTION
1.	Electrical General Provisions	26 0500
2.	Electrical Submittals and Spare Parts	26 0502
3.	Electrical Connections for Equipment	26 0507
4.	Conductors and Cables	26 0519
5.	Grounding	26 0526
6.	Supporting Devices	26 0529
7.	Conduit Raceway	26 0532
8.	Electrical Boxes and Fittings	26 0533
9.	Electrical Identification	26 0553
10.	Protective Device Study	26 0573
11.	Occupancy Sensors	26 0923
12.	Panelboards	26 2416
13.	Service Entrance	26 2713
14.	Wiring Devices	26 2726
15.	Overcurrent Protective Devices	26 2815
16.	Motor and Circuit Disconnects	26 2816
17.	Motor Starters	26 2913
18.	Interior and Exterior Building Lighting	26 5100
19.	Telephone/Data Systems	27 1500
20.	Security Systems (Raceways)	28 1601
21.	Fire Alarm and Detection System	28 3111

B. Use of standard industry symbols together with the special symbols, notes, and instructions indicated on the drawings describe the work, materials, apparatus and systems required as a portion of this work.

C. Visit the site during the bidding period to determine existing conditions affecting electrical and other work. All costs arising from site conditions and/or preparation shall be included in the base bid. No additional charges will be allowed due to inadequate site inspection.

1.3 DEFINITION OF TERMS

A. The following terms used in Divisions 26, 27 and 28 documents are defined as follows:

© BNA Consulting

1. "Provide": Means furnish, install and connect, unless otherwise indicated.
2. "Furnish": Means purchase and deliver to project site.
3. "Install": Means to physically install the items in-place.
4. "Connect": Means make final electrical connections for a complete operating piece of equipment.

1.4 RELATED SECTIONS:

A. Consult all other sections, determine the extent and character of related work and properly coordinate work specified herein with that specified elsewhere to produce a complete installation.

B. General and Supplementary Conditions: Drawings and general provisions of contract and Division 1 of the Specifications, apply to all Division 26, 27 and 28 sections.

C. Earthwork:

1. Provide trenching, backfilling, boring and soil compaction as required for the installation of underground conduit, buried cable, in-grade pull boxes, manholes, lighting pole foundations, etc. See Division 31, Sitework, and other portions of Divisions 26, 27 and 28, for material and installation requirements.

D. Concrete Work:

1. Provide forming, steel bar reinforcing, cast-in-place concrete, finishing and grouting as required for underground conduit encasement, light pole foundations, pull box slabs, vaults, equipment pads, etc. See Division 3, Concrete for material and installation requirements.

E. Miscellaneous Metal Work:

1. Provide fittings, brackets, backing, supports, rods, welding and pipe as required for support and bracing of raceways, lighting fixtures, panelboards, distribution boards, switchboards, motor controls centers, etc. See Division 5, Metals for material and installation requirements.

F. Miscellaneous Lumber and Framing Work:

1. Provide wood grounds, nailers, blocking, fasteners, and anchorage for support of electrical materials and equipment. See Division 6, Rough Carpentry for material and installation requirements.

G. Moisture Protection:

1. Provide membrane clamps, sheet metal flashing, counter flashing, caulking and sealants as required for waterproofing of conduit penetrations and sealing penetrations in or through fire walls, floors and ceiling slabs and foundation walls. All penetrations through vapor barriers at slabs on grade shall be taped and made vapor tight. See Division 7, Thermal and Moisture Protection for material and installation requirements.

H. Access panels and doors:

1. Provide in walls, ceiling, and floors for access to electrical devices and equipment. See Division 8, Doors and Windows for material and installation requirements.

I. Painting:

1. Provide surface preparation, priming and finish coating as required for electrical cabinets, exposed conduit, pull and junction boxes, poles, surface metal raceways, etc. See Division 9, Finishes for material and installation requirements.

1.5 WORK FURNISHED AND INSTALLED UNDER ANOTHER SECTION REQUIRING CONNECTIONS UNDER THIS SECTION:

A. Provide electrical service, make requisite connections and perform operational test. Items furnished and installed under other sections and connected under this section, include but are not limited to the following:

© BNA Consulting

1. Electric motors.
2. Package mechanical equipment: fans, fan coil units, pumps, boilers, duplex compressors, etc.
3. Fire and smoke dampers
4. Water coolers.
5. Kitchen equipment including ovens, disposers, dishwashers, etc.
6. Hand dryers, hair dryers.

1.6 WORK NOT INCLUDED IN THIS DIVISION:

A. Items of work provided under Division 27 and 28 include, but are not necessarily limited to, the following:

1. Telephone cables and electronic equipment.
2. Data system cables, fittings, coverplates and electronic equipment.
3. Security system equipment, cables, fittings, and coverplates.

1.7 INTERPRETATION OF DRAWINGS AND SPECIFICATIONS:

A. Before bidding, Contractor shall familiarize himself with the drawings, specifications and project site. Submit requests for clarification to Architect/Engineer in writing prior to issuance of final addendum. After signing the contract, the Contractor shall meet the intent, purpose, and function of the Contract Documents. Any costs of materials, labor and equipment arising therefrom, to make each system complete and operable, is the responsibility of the Contractor.

1.8 QUALITY ASSURANCE:

A. Reference to codes, standards, specifications and recommendations of technical societies, trade organizations and governmental agencies refers to the latest edition of such publications adopted and published prior to submittal of the bid proposed, unless noted otherwise herein. Such codes or standards are considered a part of this specification as though fully repeated herein.

B. When codes, standards, regulations, etc. allow work of lesser quality or extent than is specified under this Division, nothing in said codes shall be construed or inferred as reducing the quality, requirements or extent of the Drawings and Specifications. Perform work in accordance with applicable requirements of all governing codes, rules and regulations including the following minimum standards, whether statutory or not:

1. National Electric Code (NEC).
2. International Building Code (IBC).
3. International Fire Code (IFC).
4. International Mechanical Code (IMC).

C. Standards: Comply with the following standards where applicable for equipment and materials specified under this Division.

1.	UL	Underwriters' Laboratories
2.	ASTM	American Society for Testing Materials
3.	CBN	Certified Ballast Manufacturers
4.	IPCEA	Insulated Power Cable Engineers Association
5.	NEMA	National Electrical Manufacturer's Association
6.	ANSI	American National Standards Institute
7.	ETL	Electrical Testing Laboratories

D. All electrical apparatus furnished under this Section shall conform to (NEMA) standards and the NEC and bear the Underwriters' Laboratories (UL) label where such label is applicable.

© BNA Consulting

E. Comply with requirements of State and Local Ordinances. If a conflict occurs between these requirements and the Contract Documents, the most stringent requirements shall govern. The Contractor accepts this responsibility upon submitting his bid, and no extra charge will be allowed after the contract is awarded. This shall not be construed as relieving the Contractor from complying with any requirements of the Contract Documents that may be in excess of the aforementioned requirements, and not contrary to same.

F. Obtain all permits, inspections, etc. required by authority having jurisdiction. Include all fees in bid. Furnish a certificate of approval to the Owner's Representative from the Inspection Authority at completion of the work.

G. Employ only qualified craftsmen with at least three years of experience. Workmanship shall be neat, have a good mechanical appearance and conform to best electrical construction practices. Provide a competent superintendent to direct the work at all times. Any person found incompetent shall be discharged from the project and replaced by satisfactory personnel.

H. Contractor shall have a current state contracting license applicable to type of work to be performed under this contract.

1.9 CONSTRUCTION CHANGE ORDER PROPOSALS

A. In the event that a submission of a change order is issued by the contractor, the following information will be required to be submitted by the contractor, prior to any consideration by the owner/architect.

a. Where project manager or project engineer work is required, the labor cost shall not exceed 2% of the electrical portion of the change order.

b. All equipment, including conduit and wire, shall be itemized, identifying unit costs and quantities of equipment. Distributor quotes shall accompany all change order requests. The distributor quotes shall include costs for all equipment including conduit and wire. Lot pricing for equipment is not acceptable.

c. The general contractor shall review and confirm that the quantity and costs of materials submitted appear reasonable for the scope proposed.

d. Labor units shall not exceed base NECA 1 standards. No adjustment factors shall be approved.

e. Any research and labeling time, shall be the responsibility of the electrical contractor and shall not be included in the change order request.

f. Any costs associated with the purchase of tools or transportation shall be fully itemized for review by architect/owner.

g. Overtime rates shall only be approved where additional manpower cannot achieve the same result.

h. Change order form shall follow the following format:

i. PCO number

ii. Detailed description of work being performed

iii. Location on project where work is performed

iv. Chosen NECA column

v. Identified material:

1. QTY
2. Unit cost
3. Mark up
4. Material total

vi. Identified labor:

1. QTY
2. Unit cost
3. Composite labor rate
4. Labor total

1.10 RECORD DRAWINGS:

A. Maintain, on a daily basis, a complete set of “Record Drawings”, reflecting an accurate

© BNA Consulting

record of work in accordance with the following:

1. Show the complete routing and location of all feeders rated 100 amps and larger. Locate work buried below grade or under slab, work concealed above ceilings, and work in concealed spaces, dimensionally from fixed structural elements (not partition walls, etc.)
2. Show the complete routing and location of all telecommunications conduits, systems raceways, and empty raceways, 1-1/4" and larger. Locate work buried below grade or under slab, work concealed above ceilings, and work in concealed spaces, dimensionally from fixed structural elements (not partition walls, etc.).
3. Show all changes, deviations, addendum items, change orders, job instructions, etc., that change the work from that shown on the contract documents, including wall relocations, fixtures and device changes, branch circuiting changes, etc. Where locations of boxes, raceways, equipment, etc. are adjusted in the field to fit conditions, but such new locations may not be obvious by referring to the contract document, show new locations on the record drawings.

B. At the discretion of the Architect/Engineer, the drawings will be reviewed on a periodic basis and used as a pre-requisite for progress payments. This requirement shall not be construed as authorization for the Contractor to make changes in the layout, or work without written authorization for such changes. The “Record Drawings” for daily recording shall consist of a set of blue line prints of the Contract Drawings.

C. Upon completion of the work, purchase a complete set of electronic drawings. Transfer all “Record” information from the blue line prints to the drawings via the current CAD program that it was written. The Architect/Engineer shall review the drawings and the Contractor shall incorporate the resulting comments into the final record drawings. The Contractor shall make two complete copies of the drawings electronically and forward this to the Engineer.

D. Certify the “Record Drawings” for correctness by placing and signing the following certifications of the first sheet of the drawings:

"CERTIFIED CORRECT (3/8" high letters)

(Name of General Contractor)

By: _____ Date: _____

(Name of Electrical Contractor)

By: _____ Date: _____

1.11 GUARANTEE:

A. Ensure that electrical system installed under this contract is in proper working order and in compliance with drawings, specifications, and/or authorized changes. Without additional charge, replace any work or materials that develop defect, except from ordinary wear and tear, within one year from the date of substantial completion. Exception: Incandescent and fluorescent lamps shall be guaranteed for a period of two months from the date of substantial completion.

1.12 OTHER:

A. Right to Hire. “Client” agrees that during the project and for a period of twenty four (24) months following substantial completion that it will not, directly or indirectly, employ or solicit to employ BNA Personnel.

© BNA Consulting

PART 2 – PRODUCTS

2.1 GENERAL:

A. Products are specified by manufacturer name, description, and/or catalog number. Discrepancies between equipment specified and the intended function of equipment shall be brought to the attention of the Architect/Engineer in writing prior to bidding. Failure to report any conflict, including catalog numbers, discontinued products, etc., does not relieve the Contractor from meeting the intent of the contract documents nor shall it change the contract cost. If the Contractor is unable to interpret any part of the plans and/or specifications, or should he find discrepancies therein, he shall bring this to the attention of the Architect/Engineer who will issue interpretation and/or additional instructions to Bidders before the project is bid.

2.2 MANUFACTURERS:

A. Provide products of manufacturers specified. Manufacturers catalog numbers and descriptions establish the quality of product required. Substitutions will be considered if a duplicate written application (2-copies) is at the office of the Architect/Engineer eight (8) working days prior to the day of the bidding. The application shall include the following: 1) A statement certifying that the equipment proposed is equal to that specified; that it has the same electrical and physical characteristics, compatible dimensions, and meets the functional intent of the contract documents; 2) The specified and submittal catalog numbers of the equipment under consideration; 3) A pictorial and specification brochure.

B. Any conflict arising from the use of substituted equipment shall be the responsibility of the Contractor, who shall bear all costs required to make the equipment comply with the intent of the contract documents.

C. Samples may be required for non-standard or substituted items before installation during construction. Provide all samples as required.

D. No materials or apparatus may be substituted after the bid opening except where the equipment specified has been discontinued.

E. Provide only equipment specified in the Contract Documents or approved by addendum.

2.3 SPARE PARTS:

A. Provide spare parts (fuses, diffusers, lamps, etc.) as specified. Transmit all spare parts to Owner's Representative prior to substantial completion.

PART 3 – EXECUTION

3.1 INSTALLATION:

A. Layout electrical work in advance of construction to eliminate unnecessary cutting, drilling, channeling, etc. Where such cutting, drilling, or channeling becomes necessary for proper installation; perform with care. Use skilled mechanics of the trades involved. Repair damage to building and equipment at no additional cost to the contract. Cutting work of other Contractors shall be done only with the consent of that Contractor. Cutting structural members shall not be permitted.

B. Provide equipment enclosures appropriate to the environment to which they are installed. For example, provide NEMA 3R for exterior enclosures and NEMA 1 for interior enclosures unless otherwise noted.

C. Since the drawings of floor, wall, and ceiling installation are made at small scale; outlets, devices, equipment, etc., are indicated only in their approximate location unless dimensioned. Locate outlets and apparatus symmetrically on floors, walls and ceilings where not dimensioned, and coordinate such locations with work of other trades to prevent interferences. Verify all dimensions on the job. Do not scale the electrical drawings, but

© BNA Consulting

refer to the architectural and mechanical shop drawings and project drawings for dimensions as applicable.

D. Perform for other trades, the electrical wiring and connection for all devices, equipment or apparatus. Consult Architectural, Mechanical, and other applicable drawings, and all applicable shop drawings to avoid switches, outlets, and other equipment from being hidden behind doors, cabinets, counters, heating equipment, etc., or from being located in chalkboards, tackboards, glass panels, etc. Relocate buried electrical devices and/or connections as directed at no additional cost.

E. Coordinate the location of outlets, devices, connections, and equipment with the supplier of the systems furniture prior to rough-in.

F. Where conduit, outlets or apparatus are to be encased in concrete, it must be located and secured by a journeyman or foreman present at the point of installation. Check locations of the electrical items before and after concrete and/or masonry installation and relocate displaced items.

G. Provide block-outs, sleeves, demolition work, etc., required for installation of work specified in this division.

3.2 CLEAN:

A. Clean up all equipment, conduit, fittings, packing cartons and other debris that is a direct result of the installation of the work of this Division.

B. Clean fixtures, interiors and exteriors of all equipment, and raceways. Replace all filters in electrical equipment upon request for Substantial Completion.

3.3 POWER OUTAGES:

A. All power outages required for execution of this work shall occur during non-standard working hours and at the convenience of the Owner. Include all costs for overtime work in bid.

B. Submit written request at least 7 days in advance of scheduled outage and proceed with outage only after receiving authorization from the Owner's Representative.

C. Keep all outages to an absolute minimum.

3.4 STORAGE AND PROTECTION OF MATERIALS:

A. Provide storage space for storage of materials and apparatus and assume complete responsibility for all losses due to any cause whatsoever. In no case shall storage interfere with traffic conditions in any public thoroughfare or constitute a hazard to persons in the vicinity. Protect completed work, work underway, and apparatus against loss or damage.

3.5 EXCAVATING FOR ELECTRICAL WORK:

A. General: Locate and protect existing utilities and other underground work in manner that will ensure that no damage or service interruption will result from excavating and backfilling. Perform excavation in a manner that protects walls, footings, and other structural members from being disturbed or damaged in any way. Burial depths must comply with NEC Section 300-5 (or State of Utah requirement, whichever is more stringent), unless noted otherwise on drawings.

B. Protect persons from injury at excavations, by barricades, warnings and illumination.

C. Coordinate excavations with weather conditions, to minimize possibility of washouts, settlements and other damages and hazards.

D. Provide temporary covering or enclosure and temporary heat as necessary to protect bottoms of excavations from freezing and frost action. Do not install electrical work on frozen excavation bases or sub-bases.

© BNA Consulting

E. Do not excavate for electrical work until the work is ready to proceed without delay, so that total time lapse from excavation to completion of backfilling will be minimum. See other sections of specification for additional requirements for excavating.

F. Store excavated material (temporarily) near excavation, in a manner that will not interfere with or damage excavation or other work. Do not store under trees (within drip line).

G. Retain excavated material that complies with requirements for backfill material. Dispose of excavated material that is either in excess of quantity needed for backfilling or does not comply with requirements for backfill material. Remove unused material from project site, and dispose of in lawful manner.

3.6 BACKFILL MATERIALS:

A. For buried conduit or cable (other than below slab-on-grade, or concrete encased) - 2" thickness of well graded sand on all side of conduit or cable.

B. For trench backfill to within 6" of final grade - soil material suitable for compacting to required densities.

C. For top 6" of excavation - Top soil.

D. Backfill excavations in 8" high courses of backfill material, uniformly compacted to the following densities (percent of maximum density, ASTM D 1557), using power-driven hand-operated compaction equipment.

1. Lawn/Landscaped Areas: 85 percent for cohesive soils, 95 percent for cohesionless soils.
2. Paved Areas, Other than Roadways (90 percent for cohesive soils, 95 percent for cohesionless soils).

E. Subsidence: Where subsidence is measurable or observable at electrical work excavations during general project warranty period, remove surface (pavement, lawn or other finish), add backfill material, compact, and replace surface treatment. Restore appearance, quality and condition of the surface or finish to match adjacent work, and eliminate evidence of restoration to greatest extent possible.

3.7 CONCRETE BASES:

A. Unless otherwise noted, provide 4" high reinforced concrete bases for all floor mounted or floor standing electrical equipment, including generators, transformers, switchgear, battery racks, motor control centers, etc. Extend bases 6" beyond equipment or mounting rails on all sides or as shown on the drawings. Notwithstanding this requirement, coordinate with equipment manufacturer, shop drawings, and height of base to ensure compliance with NEC 404.8.

B. Concrete bases shall be provided under Divisions 26, 27 and 28. Coordinate size and location of all bases and furnish all required anchor bolts, sleeves, reinforcing and templates as required to obtain a proper installation.

C. Provide and locate properly sized concrete pads for power company furnished pad mounted transformers in accordance with power company clearance requirements.

3.8 ROOF PENETRATIONS:

A. Where raceways penetrate roofing or similar structural area, provide appropriate roof jack coordinate with the roofing contractor and the Architect in order to match the vent with the roof construction. The jack shall be sized to fit tightly to raceway for weather-tight seal, and with flange extending a minimum of 9" under roofing in all sides or as required by the roof type of construction. Completely seal opening between inside diameter of roof flashing and outside diameter of penetrating raceways. Coordinate all work with work required under roofing section of specifications.

© BNA Consulting

3.9 FIRE PENETRATION SEALS:

A. Seal all penetrations for work of this section through fire rated floors, walls and ceilings to prevent the spread of smoke, fire, toxic gas or water through the penetration either before, during or after fire. The fire rating of the penetration seal shall be at least that of the floor, wall or ceiling that it is installed, so that the original fire rating of the floor or wall is maintained as required by Article 300-21 of the National Electrical Code. Where applicable, provide OZ Type CFSF/I and CAFSF/I fire seal fittings for conduit and cable penetrations through concrete and masonry walls, floors, slabs, and similar structures. Where applicable, provide 3M CID cast-in device for floor slabs. Where applicable, provide 3M fire barrier sealing penetration system, and/or IPC Flame Safe Fire Stop System, and/or Chase Foam fire stop system, including wall wrap, partitions, caps, and other accessories as required. All materials to comply with UL 1479 (ASTM E-814). Comply with manufacturer's instructions and recommendations for installation of sealing fittings and barrier sealing systems.

3.10 PROJECT FINALIZATION AND START-UP:

A. Upon completion of equipment and system installation, assemble all equipment Factory Representatives and Subcontractors for system start-up.

B. Each Representative and Subcontractor shall assist in start-up and check out their respective system and remain at the site until the total system operation is accepted by the Owner's representative.

C. The Factory Representative and/or System Subcontractor shall give personal instruction on operating and maintenance of their equipment to the Owner's maintenance and/or operation personnel. To certify acceptance of operation and instruction by the Owner's Representative, the contractor shall prepare a written statement as follows:

1. This is to certify that the Factory Representative and System Subcontractor for each of the systems listed below have performed start-up and final check out of their respective systems.
2. The Owner's Representative has received complete and thorough instruction in the operation and maintenance of each system.

SYSTEM	FACTORY REPRESENTATIVE
(List systems included)	(List name and address of Factory Representative)

_____	_____
Owner's Representative	Contractor

D. Send copy of acceptance to Architect/Engineer.

3.11 FINAL REVIEW:

A. At the time of final review, the project foreman shall accompany the reviewing party, and remove coverplates, panel covers and other access panels as requested, to allow review of the entire electrical system.

END OF SECTION 26 0500

© BNA Consulting

BLANK PAGE

© BNA Consulting

SECTION 26 0502 - ELECTRICAL SUBMITTALS, O & M MANUALS AND SPARE PARTS

PART 1 – GENERAL

1.1 RELATED DOCUMENTS:

A. Drawings and general provisions of Contract, including General and Supplementary Conditions and Division-1 Specification sections, apply to all Division 26, 27 and 28 sections.

B. Architectural, Structural, Mechanical and other applicable documents are considered a part of the electrical documents insofar as they apply as if referred to in full. Contractor must review the entire set of plans and specifications. Reviewing only the electrical set is not acceptable.

C. Consult all other sections, determine the extent and character of related work and properly coordinate work specified herein with that specified elsewhere to produce a complete installation.

1.2 SUBMITTAL REQUIREMENTS:

A. GENERAL:

1. After the Contract is awarded but prior to ordering, manufacture, or installation of any equipment, prepare complete Submittals including shop drawings, product data, brochures, etc. for materials and equipment as required by each section of the specification.
2. Review of Submittals shall not relieve the Contractor of responsibility for dimensions and/or errors that may be contained therein, or deviations from the Contract Document's requirements. It shall be clearly understood that the noting of some errors but overlooking others does not grant the Contractor permission to proceed in error. Regardless of any information contained in the Shop Drawings and Brochures, the requirements of the Contract Document's shall govern and are not waived, or superseded in any way by the review of the Shop Drawings and Brochures.
3. Submittals are reviewed, not approved. Comments made within submittals do not alter the contract documents in any way. The contractor is still responsible, regardless of comments (if any) made within submittals, for complying with drawings and specifications.
4. Notify engineer in writing if any of the comments noted in the submittals alter the contract cost. A comment within the submittal process which increases/decreases cost of product is not an authorization to the contractor under any circumstances to proceed.
5. Notify engineer of any modifications between contract documents and submittals. It is the responsibility of the contractor to ensure compliance.
6. ELECTRONIC SUBMITTAL REQUIREMENTS:
   a. Provide submittals in Portable Document Format (PDF).
   b. Documents must be electronically bookmarked by Division e.g. 26, 27 and 28, Specification section e.g. 26 0510 and individually for each item submitted for light fixtures, switchgear, transformer, panelboard etc. and keyword searchable using Adobe Acrobat (http://www.adobe.com/acrobat) or Bluebeam Revu (http://www.bluebeam.com) for each relevant section.
   c. Electronically highlight all options for light fixtures, electrical equipment, etc. Manual highlighting and scanning of the documents is NOT acceptable and will NOT be reviewed.

d. Provide only completed cutsheets for all fixture and equipment types. Blank cutsheets submitted with a schedule are NOT acceptable and will NOT be reviewed.

e. At the time of submission, the electrical contractor shall provide a complete and comprehensive submission of all required specification sections/shop drawings at the same time. Exceptions may be given, with prior approval, for time-sensitive equipment.

f. A maximum of one submittal per specification section is allowed. It is NOT acceptable to provide a product by product submittal. Single product by product submittals will NOT be reviewed.

B. SCHEDULING

1. GENERAL

a. A minimum period of two weeks, exclusive of transmittal time, will be required each time Submittals are submitted or resubmitted for review. This time period shall be considered by the Contractor when scheduling submittal data.

b. If the shop drawings are rejected twice, the contractor shall reimburse the engineering firm the sum of $1,200.00 for the third review and any additional reviews required prior to the commencement of additional review.

C. QUALITY ASSURANCE

1. PRE-SUBMITTAL PREPARATION

a. Prior to submission of the Shop Drawings and Project Data, review and certify that they are in compliance with the Contract Documents. Verify all dimensional information to ensure proper clearance for installation of equipment.

b. Shop drawings requiring the use of electronic documents (floor plans, Lighting plans, fire alarm plans, etc.) shall be requested via a request for information (RFI) through the general contractor. Electronic documents will be provided to the Architect for distribution. No direct vendor requests will be accepted.

c. Contractor is completely responsible for the content of the submittal

2. SUBMITTAL REQUIREMENTS

a. Provide a stamp or statement on each submittal as follows:

i. I hereby certify that this Shop Drawing and/or Brochure has been checked prior to submittal and that it complies in all respects with the requirements of the Contract Drawings and Specifications for this Project.

(Name of Electrical Subcontractor)

Name_____.

Position_____Date_____

i. Failure to provide certification will result in submittals being rejected and returned without review.

b. Brochures to be submitted as supplementary information shall be published by the Manufacturers and shall contain complete and detailed engineering and dimensional information. Brochures submitted shall contain only information relevant to the particular equipment or materials to be furnished. The Contractor shall not submit catalogs that describe several different items in addition to those items to be used, unless all

irrelevant information is marked out, or unless relevant information is clearly marked. Brochures from each manufacturer shall be identified and submitted separately.

c. Shop Drawings shall be done in an easily legible scale and shall contain sufficient plans, elevations, sections, and isometrics to clearly describe the equipment or apparatus, and its location. Drawings shall be prepared by an Engineer/Draftsmen skilled in this type of work. Shop Drawings shall be drawn to at least 1/4" = 1'0" scale.

d. Observe the following rules when submitting the Shop Drawings and Brochures.

i. Each Shop Drawing shall indicate in the lower right hand corner, and each Brochure shall indicate on the front cover the following: Title of the sheet or brochure, name and location of the building; names of the Architect and Electrical Engineer, Contractor, Subcontractors, Manufacturer, Supplier/Vendor, etc., date of submittal, and the date of correction and revision. Unless the above information is included the submittal will be rejected and returned without being reviewed.

1. Submittal Identification shall include the following:

a. A unique number, sequentially assigned, shall be noted on the transmittal form accompanying each item submitted.

b. Original submittal numbers shall have the following format: “XXX-Y;” where “XXX” is the originally assigned submittal number and “Y” is a sequential letter assigned for resubmittals (for example, A, B, or C being the first, second, and third resubmittals, respectively). Submittal 25B, for example, is the second resubmittal of Submittal 25.

D. POST-SUBMITTAL

1. Check all materials and equipment after arrival on the job site and verify compliance with the Contract Documents.

1.3 PROVIDE SUBMITTALS AS REQUESTED FOR EACH OF THE SECTIONS LISTED BELOW:

A. 26 0519 Conductors and Cables

1. (600V and Below)

a. Submit megohmmeter test data for circuits under 600 volts. Megger all circuits of 100 amp and greater rating.

B. 26 0526 Grounding

1. Submit the name of test agency to be used for testing specified in this section. Submit results of tests specified in this section. Also include test results in Operation and Maintenance Manuals as specified.

C. 26 0532 Conduit Raceway

1. Submit manufacturer’s data on MC-PCS Power & Control/Signal Cable.

D. 26 0553 Electrical Identification

1. Submit manufacturer's data on each type of electrical identification products

   a. Submit one sample of each component of the electrical identification system as follows: Wire/cable tape marker, Tags, Engraved, plastic laminate labels, Arc-flash hazard labels

E. 26 0573 Protective Device Study

1. Submit partial study that includes the calculated values for short circuit current availability and arc flash levels for each switchgear bus, medium voltage controller, switchboard, low voltage motor control center, distribution panelboard, automatic transfer switch, and branch circuit panelboard. This data shall be submitted prior to, or at the same time as, submitting the entire electrical gear package. If partial study is not received prior to other submittals, the associated submittal will be rejected and not reviewed. Contractor shall utilize construction drawings to estimate approximate feeder lengths for this preliminary submittal. Submitted data shall include equipment/panel designations, feeder conductor sizes, feeder lengths, and calculated short circuit values and arc flash levels. Include the utility transformer ratings and transformer impedances used for the preparation of the short circuit calculations.

   a. Partial study shall be submitted prior to switchboards, switchgear, panelboards, transformers, etc.

2. Construction Period Submittal: During the construction period but prior to application of utility power to the electrical distribution system, submit an indexed copy of the complete protective device study based on actual field values. Include the following:

   a. Introductory section with basic formulas, pertinent data, and rationale employed in the study.

   b. One-line diagram for that portion of the system included in the study.

   c. Calculations section showing tabulated calculations.

   d. Results, recommendations, settings, etc.

3. Provide one revision to study based on engineering review comments for the completed study to allow for minor modifications to adjustable circuit breakers to minimize arc flash levels.

F. 26 0923 Occupancy Sensors

1. Submit manufacturer's data on occupancy sensors, control modules, wiring diagrams, instructions for installation, interconnection diagrams and any related accessories.

2. Submit scaled drawings with lighting fixtures shown and sensor equipment/devices clearly marked by manufacturer showing proper product, location, coverage pattern and orientation of each sensor.

G. 26 2416 Panelboards

1. Submit manufacturer's data and shop drawings only after completion of the preliminary protective device study (see Section 26 0573 as applicable). Any Section 26 2416 submittals received prior to submission of the preliminary protective device study will be REJECTED.

2. Submit dimensioned drawings of panelboards and enclosures showing accurately scaled layouts of enclosures and required individual panelboard devices, including but not necessarily limited to, circuit breakers, fusible switches, fuses, ground-fault circuit interrupters, and accessories.

3. Submit manufacturer data including specifications, installation instructions and general recommendations, for each type of panelboard required.

H. 26 2713 Service Entrance

1. Submit manufacturer's data on service-entrance equipment and accessories.

2. Submit dimensioned layouts of service-entrance equipment and spatial relationships to proximate equipment. Failure to submit said layouts shall not relieve contractor of responsibility to verify required clearances before release of equipment to fabrication.

3. Submit manufacturer’s data and shop drawings only after completion of the preliminary protective device study (see Section 26 0573 as applicable). Any Section 26 2713 submittals received prior to submission of the preliminary protective device study will be REJECTED.

I. 26 2726 Wiring Devices

1. Submit manufacturer's data on electrical wiring devices.

J. 26 2815 Overcurrent Protective Devices

1. Submit manufacturer’s data and shop drawings only after completion of the preliminary protective device study (see Section 26 0573 as applicable). Any Section 26 2815 submittals received prior to submission of the preliminary protective device study will be REJECTED.

2. Submit manufacturer's data on overcurrent protective devices, including catalog cuts, time-current trip characteristic curves, and mounting requirements.

3. Submit layout drawings of overcurrent protective devices, with layouts of circuit breakers, including spatial relationships to proximate equipment. Failure to submit said spatial layouts does not relieve contractor of responsibility to verify all required clearances before release of equipment for fabrication.

4. Submit time-current trip curves (in log-log format) and trip setting parameter/range information (for each trip function) for all solid-state circuit breakers.

5. Manufacturer shall also provide recommended trip settings with the shop drawing submittal (including ground fault settings) for coordination with downstream overcurrent devices. Manufacturer shall base recommendations on the AIC rating of the electrical equipment.

6. Where the Protective Device Study specification section 260573 is included in the project, the time-current curves and recommended trip settings for all solid-state circuit breakers shall be submitted as part of the protective device study.

K. 26 2816 Motor and Circuit Disconnects

1. Submit manufacturer's data including specifications, installation and general recommendations, for each type of motor and circuit disconnect switch required.

2. Submit dimensioned drawings of electrical motor and circuit disconnect switches that have rating of 100 amperes and larger.

L. 26 2913 Motor Starters

1. Submit manufacturer's data on motor starters.

2. Submit dimensioned drawings of motor starters showing accurately scaled equipment layouts.

M. 26 5100 Interior and Exterior Building Lighting

1. Submit manufacturer's data on interior and exterior building lighting fixtures.

2. Submit dimensioned drawings of lighting fixtures. Submit fixture shop drawings in PDF format with separate sheet for each fixture, assembled in luminaire "type" alphabetical order, with each “type” individually bookmarked, with proposed fixture catalog number and accessories clearly indicated on each sheet.

3. When applicable submit standard color samples with the shop drawings. If standard colors are not acceptable, a color sample will be provided to the fixture manufacturer. Return of the shop drawings will be delayed until color samples are provided.

4. Submit ballast and/or driver manufacturer cut sheets.

5. Submit a list of all lamps used on projects.

N. 26 5561 Stage Lighting and Dimming System

1. Submit manufacturer's data on stage lighting and dimming systems, including, but not limited to, dimmer racks, control consoles, lighting instruments, connector strips, receptacles, instructions for installation, operation and maintenance, suitable for inclusion in maintenance manuals.

2. Submit dimensioned drawings of stage lighting and dimming system components and accessories. Show accurately scaled layouts of system components. Provide wiring diagrams for inter connection of system components.

O. 27 1500 Telephone Data Systems

1. Provide proof of RCDD certification and connectivity manufacturer certification.

2. Provide submittals for all racks/cabinets; patch panels, devices, cabling, firestopping solutions, tray, non-continuous cable support devices, grounding equipment, and miscellaneous equipment to be used on project. Where multiple part numbers are listed on a datasheet/cutsheet, highlight or circle applicable part.

3. Provide submittals showing complete racking layout in plan and elevation view to scale. Coordinate exact rack layout with Owner Information Technology Representative prior to submittal.

4. Provide color samples of all available standard color faceplates to architect.

5. Provide proposed labeling scheme for approval by owner/engineer.

6. Provide catalog cutsheets of all test equipment that will be used.

P. 28 3111 Fire Alarm and Detection System

1. Submit manufacturer's data on fire alarm and detection systems including, but not limited to, roughing-in diagrams and instructions for installation, operating and maintenance, suitable for inclusion in maintenance manuals.

2. Provide shop drawings showing equipment/device locations and connecting wiring of entire fire alarm and detection system. Include wiring diagrams and riser diagrams of panel. Provide dimensioned drawing of Fire Alarm Control Panel and Building Graphic. Shop drawings shall be prepared by an individual with a minimum NICET III (Fire Protection Engineering Technology/Fire Alarm Systems) certification. The individual’s name and certification number shall be shown on the submittal design drawings.

3. Submit a written statement to the Architect and the state and local Fire Marshal's Office that each device of the fire alarm system will be installed, inspected and tested in accordance with applicable requirements of NFPA Standard 72.

4. A complete set of shop drawings indicating:

a. Location of all alarm-initiating and alarm-signaling devices.

b. Point-to-point wiring diagrams for all alarm-initiating and alarm-signaling devices.

c. Standby battery calculations, including voltage drop calculation.

5. Wiring diagrams for:

a. Alarm control panels.

b. Auxiliary function relays and solenoids.

c. Remote signaling equipment.

6. A complete equipment list identifying:

a. Type

b. Model

c. Manufacturer

d. Manufacturer catalog data sheets

e. UL Listing and/or FM approval showing compatibility of device with Fire Alarm Control Panel (FACP)

7. A complete zone list identifying all:

a. Alarm-initiating and alarm-signaling devices.

b. Remote signaling and auxiliary function zones.

c. Specific devices associated with each zone.

8. Submit to State and Local Fire Marshall, a complete Certificate of Compliance

1.4 OPERATION & MAINTENANCE MANUALS

A. Provide operating instruction and maintenance data books for all equipment and materials furnished under this Division.

B. Submit four copies of operating and maintenance data books for review at least four weeks before final review of the project. Assemble all data in a completely indexed volume or volumes and identify the size, model, and features indicated for each item. The binder (sized to the material) shall be a 2" slide lock unit (Wilson-Jones WLJ36544B). The cover shall be engraved with the job title in 1/2" high letters and the name and address of the Contractor in 1/4" high letters. Provide the same information in 1/8" letters on the spine.

C. Include complete cleaning and servicing data compiled in clearly and easily understandable form. Show serial numbers of each piece of equipment, complete lists of replacement parts, motor ratings, etc. Each unit shall have its own individual sheet. (Example: If two items of equipment A and D appear on the same sheet, an individual sheet shall be provided for each unit specified).

D. Include the following information where applicable.

1. Identifying name and mark number.
2. Certified outline Drawings and Shop Drawings.
3. Parts lists.
4. Performance curves and data.
5. Wiring diagrams.
6. Light fixture schedule with the lamps and ballast data used on the project for all fixtures
7. Manufacturer's recommended operating and maintenance instructions.
8. Vendor's name and address for each item.

E. The engineer shall review the manuals and when approved, will forward the manuals on to the architect. If the manuals are rejected twice, the contractor shall reimburse the engineer the sum of $1,200.00 for each review afterwards.

F. Provide Operation and Maintenance Manual information for each section listed below in addition to the general requirements listed above.

1. 26 0526 Grounding

a. Test Results of measured resistance values

2. 26 0923 Occupancy Sensors

   a. Record Drawings

      i. A complete set of ‘as-builts’ drawings showing installed wiring, specific interconnections between all equipment, and internal wiring of this equipment shall be included in the operating and maintenance manuals upon complete of the system.

      ii. Provide a CD to the owner containing the information specified below. The CD shall include all information required to allow the Owner to change the schedules themselves. The CD shall contain a minimum of following:

         1. CAD drawing files of ‘as-built’ lighting control components and point to point connections.

         2. General configuration programming.

         3. Job specific configuration programming to include schedule.

         4. Tutorial file on complete programming of lighting control system.

3. 26 2913 Motor Starters

   a. After installation is complete, including water and air balancing, measure voltage (L-L and L-N) and full load current of each phase of each motor. Submit report showing field readings of voltage, amperage, service factor, and thermal heater size installed for each motor.

4. 27 1500 Telephone/Data System

   a. Test Results as outlined in Section 27 1500

   b. Manual shall include all service, installation, programming and warranty, including test results for each cable.

   c. Provide laminated plans (minimum size 11 x 17) of all telecommunications record drawings (including riser diagrams) in each and every EF, ER and TR.

   d. Record Drawings

      i. The Owner shall provide electronic (DWG) format of telephone/data system drawings that as-built construction information can be added. These documents will be modified accordingly by the telecommunications contractor to denote as-built information as defined above and returned to the Owner.

      ii. Provide a complete set of “as built” drawings in paper and electronic (DWG and PDF) formats showing cabinets, racks, patch panels, wiring, specific interconnections between all equipment and internal wiring of equipment within 30 working days of completion. Drawings are to include all labeling information used in denoting equipment used in the installation. Labeling, icons, and drawing conventions used shall be consistent throughout all documentation provided.

5. 28 3113 Fire Alarm and Detection System

   a. Manual Requirements

i. Operating and maintenance manuals shall be submitted prior to testing of the system. Manuals shall include all service, installation, and programming information.

b. Record Drawings

i. A complete set of CAD "as-built" drawings showing installed wiring, color coding, specific interconnections between all equipment, and internal wiring of the equipment shall be delivered to the owner upon completion of the system. Vendor shall not request drawings from the Engineer. Vendor shall request current architectural drawings from the Architect and include all cost with bid.

ii. A building map shall be supplied to the owner indicating the exact location of all devices along with the addresses of the individual devices. Install building fire alarm map adjacent to the fire alarm panel and all remote operating panels. Provide high quality plastic sign (map holder) with two layers. The back layer shall be painted black. The front layer shall be a clear center for viewing the CAD fire alarm drawing. Edges of the sign shall be colored to match the building interior. The building map shall indicate the various devices and wiring by the use of different colors (minimum of five colors).

iii. Provide a CD to the Owner containing the information specified below. The CD shall include all information required to allow the Owner to change the fire alarm program themselves. The CD shall contain a minimum of the following:

1. CAD drawing files of building fire alarm map.
2. CAD drawing files of as-built fire alarm components and point to point connections.
3. General configuration programming.
4. Job specific configuration programming.
5. Tutorial file on complete programming of fire alarm system.

1.5 SPARE PARTS:

A. Provide spare parts (fuses, diffusers, lamps, etc.) as specified. Stock of all spare items shall be delivered as directed to Owner’s storage space prior to substantial completion. All components shall be labeled to match construction document nomenclature.

Section	Section Name	Description	Qty. Required	Qty. Received	Fulfilled?
26 0923	Occupancy Sensors	Spare sensors for each type used on project.	5 per type		
26 2713	Service Entrance	Maintenance Stock Fuses: for types and ratings required, furnish additional fuses, amounting to one for every 2 installed units, but not less than one unit of each.	Per description		
26 2815	Overcurrent Protective Devices	For types and ratings required, furnish additional fuses, amounting to one unit for every 5 installed units, but not less than two units of each size and	Per description		

		type, unless specified otherwise in another section of these specifications.			
26 2816	Motor and Circuit Disconnects	Spare fuses amounting to one spare fuse for each 10 installed but not less than three of any one type and size.	Per description		
26 2913	Motor Starters	Maintenance Stock Fuses: For types and ratings required, furnish additional fuses, amounting to one unit for every 10 installed, but not less than 5 units of each, for both power and control circuit fuses.	Per description		
26 5100	Interior and Exterior Building Lighting	Spare diffusers (acrylic and/or glass only) for each fixture type. One set shall be provided per fixture type and one additional per every (10) fixtures of each type; quantity shall not exceed (10) spares for any single fixture type.	Per description		
		Furnish stock of replacement LED drivers for each type and size provided on the project. A minimum quantity of 15% but no less than two (2) shall be furnished.	Per description		
		Provide a complete spare parts list in lighting shop drawing review			
28 3111	Fire Alarm and Detection	Smoke detectors with base	10		
		Strobe/horns	5		
		Manual pull stations with addressable modules	2		
		20 feet of conduit with wiring (completely installed and wired) for each spare device	Per description		

END OF SECTION 26 0502

SECTION 260507 - ELECTRICAL CONNECTIONS FOR EQUIPMENT

PART 1 - GENERAL

1.1 RELATED DOCUMENTS:

A. Drawings and general provisions of Contract, including General and Supplementary Conditions and Division-1 Specification sections, apply to work of this section.

B. This section is a Division-26 Basic Materials and Methods section, and is part of each Division-23 section making reference to electrical connections.

1.2 DESCRIPTION OF WORK:

A. Extent of electrical connection for equipment includes final electrical connection of all equipment having electrical requirements. Make final connections for all owner furnished equipment. See other applicable portions of specification for building temperature control wiring requirements.

B. Refer to Division-23 sections for motor starters and controls furnished integrally with equipment; not work of this section.

C. Refer to Division-23 section for control system wiring; not work of this section.

D. Refer to sections of other Divisions for specific individual equipment power requirements.

1.3 QUALITY ASSURANCE:

A. NEC COMPLIANCE: Comply with applicable portions of NEC as to type products used and installation of electrical power connections.

B. UL LABELS: Provide electrical connection products and materials that have been UL-listed and labeled.

PART 2 - PRODUCTS

2.1 GENERAL:

A. For each electrical connection indicated, provide complete assembly of materials, including but not necessarily limited to, raceways, conductors, cords, cord caps, wiring devices, pressure connectors, terminals (lugs), electrical insulating tape, heat-shrinkable insulating tubing, cable ties, solderless wire nuts, and other items and accessories as needed to complete splices, terminations, and connections as required. Crimp on or slip-on type splicing materials (insulation displacement type) designed to be used without wire stripping are not acceptable. See Section 26 0532, Conduit Raceways; Section 26 2726 Wiring Devices: and Section 26 0519 Conductors and Cables for additional requirements. Provide final connections for equipment consistent with the following:

1. Permanently installed fixed equipment - flexible seal-tite conduit from branch circuit terminal equipment, or raceway; to equipment, control cabinet, terminal junction box or wiring terminals. Totally enclose all wiring in raceway.
2. Movable and/or portable equipment - wiring device, cord cap, and multi-conductor cord suitable for the equipment and in accordance with NEC requirements (Article 400).
3. Other methods as required by the National Electrical Code and/or as required by special equipment or field conditions.

© BNA Consulting

PART 3 - EXECUTION

3.1 INSTALLATION OF ELECTRICAL CONNECTIONS:

A. Make electrical connections in accordance with connector manufacturer's written instructions and with recognized industry practices, and complying with requirements of NEC and NECA's "Standard of Installation" to ensure that products fulfill requirements.

B. Connect electrical power supply conductors to equipment conductors in accordance with equipment manufacturer's written instructions and wiring diagrams.

C. Coordinate installation of electrical connections for equipment with equipment installation work.

D. Verify all electrical loads (voltage, phase, horse power, full load amperes, number and point of connections, minimum circuit ampacity, etc.) for equipment furnished under other Divisions of this specification, by reviewing respective shop drawings furnished under each division. Meet with each subcontractor furnishing equipment requiring electrical service and review equipment electrical characteristics. Report any variances from electrical characteristics noted on the electrical drawings to Architect before proceeding with rough-work. In summary it is not in the Electrical Engineers scope to review the shop drawings from other trades/divisions.

E. Obtain and review the equipment shop drawings to determine particular final connection requirements before rough-in begins for each equipment item.

F. Refer to basic materials and methods Section 26 0553 Electrical Identification, Conductors, for identification of electrical power supply conductor terminations.

END OF SECTION 26 0507

© BNA Consulting

SECTION 26 0519 - CONDUCTORS AND CABLES (600V AND BELOW)

PART 1 – GENERAL

1.1 RELATED DOCUMENTS:

A. Drawings and general provisions of Contract, including General and Supplementary Conditions and Division-1 Specification sections, apply to work of this section.

B. This section is a Division-26 Basic Materials and Methods section, and is part of each Division-26 section making reference to conductors and cables specified herein.

1.2 DESCRIPTION OF WORK:

A. Extent of electrical conductor and electrical cable work is indicated by drawings and schedules.

B. Types of conductors and cables in this section include the following:

1. Copper Conductors (600V)
2. Aluminum Conductor (600V)

C. Applications for conductors and cables required for project include:

1. Power Distribution
2. Feeders
3. Branch Circuits

1.3 RECORDS SUBMITTAL: Refer to Section 26 0502 for requirements.

1.4 QUALITY ASSURANCE:

A. Comply with NEC as applicable to construction and installation of electrical conductors and cable. Comply with UL standards and provide electrical conductors and cables that have been UL-listed and labeled.

B. Comply with applicable portions of NEMA/Insulated Cable Engineers Association standards pertaining to materials, construction and testing of conductors and cable.

C. Comply with applicable portions of ANSI/ASTM and IEEE standards pertaining to construction of conductors and cable.

1.5 SUBMITTALS: Refer to Section 26 0502 for requirements.

PART 2 - PRODUCTS

2.1 COPPER AND ALUMINUM CONDUCTORS (600V):

A. Provide factory-fabricated conductors of sizes, ratings, materials, and types indicated for each service. Where not indicated provide proper selection to comply with project's installation requirements and NEC standards. Provide conductors in accordance with the following:

1. Service Entrance Conductors – Aluminum conductor; see drawings for insulation type.
2. Distribution and Panelboard Feeders; and Other Conductors, #1 AWG and Larger – Aluminum conductor; see drawings for insulation type.
3. Branch Circuit Conductors and All Conductors #2 AWG and Smaller - Copper conductor, with THHN/THWN insulation. Size all conductors in accordance with NEC; minimum size to be #12 AWG. Provide solid conductors for #10 AWG and smaller. Provide stranded conductors for #8 AWG and larger.

© BNA Consulting

4. Aluminum Conductors. Where aluminum conductors are specified for use, provide compact stranded Aluminum Association 8000- series alloy conductor material.

   a. Stabiloy - Alcan Cable

   b. Triple E - Southwire

B. Provide a maximum of three phase conductors in any one conduit or as approved by electrical engineer. Where phase conductors share a common neutral they must have a means to simultaneously disconnect all ungrounded conductors at the point where the branch circuits originate. The ungrounded and neutral conductors of a multi-wire branch circuit must be grouped together by wire ties at the point of origination.

C. Provide neutral and ground wire as specified elsewhere in documents.

D. Provide separate neutral conductor for all single phase branch circuits installed. No shared neutrals are allowed. Neutral conductor shall be the same size as the phase conductor.

PART 3 - EXECUTION

3.1 INSTALLATION:

A. General: Install electric conductors and cables as indicated, in compliance with manufacturer's written instructions, applicable requirements of NEC and NECA's "Standards of Installation", and in accordance with recognized industry practices.

B. Coordinate installation work with electrical raceway and equipment installation work, as necessary for proper interface.

C. Cables may be pulled by direct attachment to conductors or by use of basket weave pulling grip applied over cables. Attachment to pulling device shall be made through approved swivel connection. Nonmetallic jacketed cables of small size may be pulled directly by conductors by forming them into a loop that pull wires can be attached; remove insulation from conductors before forming the loop. Larger sizes of cable may be pulled by using basket weave pulling grip, provided the pulling force does not exceed limits recommended by manufacturer; if pulling more than one cable, bind them together with friction tape before applying the grip. For long pulls requiring heavy pulling force, use pulling eyes attached to conductors.

D. Do not exceed manufacturer's recommendations for maximum allowable pulling tension, side wall pressure, and minimum allowable bending radius. In all cases, pulling tension applied to the conductors shall be limited to 0.008 lbs. per circular mil of conductor cross-section area.

E. Pull in cable from the end having the sharpest bend; i.e. bend shall be closest to reel. Keep pulling tension to minimum by liberal use of lubricant, and turning of reel, and slack feeding of cable into duct entrance. Employ not less than one man at reel and one in pullhole during this operation.

F. For training of cables, minimum bend radius to inner surface of cable shall be 12 times cable diameter.

G. Where cable is pulled under tension over sheaves, conduit bends, or other curved surfaces, make minimum bend radius 50% greater than specified above for training.

H. Use only wire and cable pulling compound recommended by the specific cable manufacturer, and that is listed by UL.

I. Seal all cable ends unless splicing is to be done immediately. Conduit bodies shall not contain splices.

J. Support all cables in pullholes, concrete trenches, and similar locations by cable racks and secure to rack insulators with nylon cord or self-locking nylon cable ties. Place each cable on separate insulator. In manholes, pullholes, concrete trenches, and similar locations, wrap strips of fire-proofing tape (approx. 1/16 inch thick by 3 inches wide) tightly around

© BNA Consulting

each cable spirally in half-lapped wrapping or in two butt-joined wrappings with the second wrapping covering the joints in the first. Apply tape with the coated side toward the cable, and extend tape one inch into the ducts. To prevent unraveling, random wrap the fireproofing tape the entire length of the fireproofing with pressure sensitive glass cloth tape. Provide fireproofing tape of a flexible, conformable fabric having one side coated with flame retardant, flexible, polymeric coating and/or a chlorinated elastomer not less than 0.050 inch thick weighing not less than 2.5 pounds per square yard. Provide tape that is noncorrosive to cable sheath, self-extinguishing, and that will not support combustion. Construct tape of materials that do not deteriorate when subjected to oil, water, gases, salt water, sewage and fungus.

K. Follow manufacturer's instructions for splicing and cable terminations.

3.2 AFTER INSTALLATION TEST FOR CABLE 600 VOLTS AND BELOW:

A. Prior to energization, test cable and wire for continuity of circuitry, and for short circuits, Megger all circuits of 100 amp and greater rating. Correct malfunctions. Record all test data and provide written test report.

B. Subsequent to wire and cable connections, energize circuitry and demonstrate functioning in accordance with requirements.

3.3 IDENTIFICATION OF FEEDERS: Refer to Section 26 0553 for requirements.

END OF SECTION 26 0519

© BNA Consulting

BLANK PAGE

© BNA Consulting

SECTION 26 0526 - GROUNDING

PART 1 – GENERAL

1.1 RELATED DOCUMENTS

A. Drawings and general provisions of Contract, including General and Supplementary Conditions and Division-1 Specification sections, apply to work of this section.

B. Division-26 Basic Materials and Methods sections apply to work specified in this section.

1.2 DESCRIPTION OF WORK:

A. Provide grounding as specified herein, and as indicated on drawings.

B. Provide grounding and bonding of all electrical and communication apparatus, machinery, appliances, building components, and items required by the NEC to provide a permanent, continuous, low impedance, grounding system.

C. Unless otherwise indicated, ground the complete electrical installation including the system neutral, metallic conduits and raceways, boxes, fittings, devices, cabinets, and equipment in accordance with all code requirements.

D. Ground each separately derived system, as described in NEC Section 250-30, unless otherwise indicated.

E. Types of grounding in this section include the following:

1. Underground Metal Water Piping
2. Metal Building Frames
3. Grounding Electrodes
4. Grounding Rods
5. Separately Derived Systems
6. Service Equipment
7. Enclosures
8. Systems
9. Equipment
10. Other items indicated on drawings

F. Requirements of this section apply to electrical grounding work specified elsewhere in these specifications.

1.3 QUALITY ASSURANCE:

A. Comply with NEC as applicable to electrical grounding and ground fault protection systems. Comply with applicable ANSI and IEEE requirements. Provide products that have been UL listed and labeled.

B. Resistance from the service entrance ground bus, through the grounding electrode to earth, shall not exceed 5 ohms.

1.4 SUBMITTALS: Refer to Section 26 0502 for requirements.

PART 2 – PRODUCTS

2.1 MATERIALS AND COMPONENTS:

A. GENERAL: Except as otherwise indicated, provide each electrical grounding system as specified herein, and as shown on drawings, including but not necessarily limited to, cables/wires, connectors, terminals (solderless lugs), grounding rods/electrodes and plate

© BNA Consulting

electrodes, bonding jumper braid, and other items and accessories needed for complete installation. Where materials or components are not otherwise indicated, comply with NEC, NEMA and established industry standards for applications indicated.

B. ELECTRICAL GROUNDING CONDUCTORS: Unless otherwise indicated, provide electrical grounding conductors for grounding connections matching power supply wiring materials and sized according to NEC. Provide with green insulation.

C. GROUND RODS: Steel with copper welded exterior, 3/4" dia. x 10' long. Weaver or Cadweld.

D. GROUND WELL BOXES FOR GROUND RODS: Precast concrete box 9-1/2" W. x 16" L. X 18" D. with light duty concrete cover for non-traffic areas or rated steel plate for traffic areas. Provide covers with lifting holes. Engrave cover with "GROUND ROD".

E. CONCRETE ENCASED GROUNDING ELECTRODE (UFER GROUND): #2/0 AWG bare copper conductor.

F. INSULATED GROUNDING BUSHINGS: Plated malleable iron body with 150 degree Centigrade molded plastic insulating throat, lay-in grounding lug with hardened stainless steel fasteners, OZ-Gedney BLG, or Thomas & Betts #TIGB series.

G. CONNECTIONS TO PIPE: For cable to pipe, OZ-Gedney G-100B series or Thomas & Betts #390X series, or Burndy type GAR.

H. CONNECTIONS TO STRUCTURAL STEEL, GROUND RODS, OR SPLICES: For splicing and/or connecting conductors, use exothermic welds or high pressure compression type connectors. Provide exothermic weld kits manufactured by Cadweld or Thermoweld. If high compression type connectors are used for cable-to-cable, or cable-to-steel, or cable-to-ground rod connections, provide Thomas & Betts #53000 series, or Burndy Hyground series.

I. BONDING JUMPERS: OZ-Gedney Type BJ, or Thomas & Betts #3840 series, or Burndy type GG and type B braid.

J. INTERSYSTEM BONDING TERMINAL: Provide one 12” L. x 2” H x ¼” thick copper bus bar. Mount on wall adjacent to Main Electrical Service Equipment on insulating standoffs, 18” A.F.F. Furnish complete with lugs for connecting systems grounding cables. All holes shall be drilled for 2 hole compression lugs. Provide 6 spare lugs. Connect to equipment grounding bus in Main Electrical Service Equipment with No. 4 AWG copper conductor.

PART 3 - EXECUTION

3.1 INSTALLATION OF GROUNDING SYSTEMS:

A. Install electrical grounding systems in accordance with manufacturer's written instructions and with recognized industry practices to ensure grounding devices comply with requirements.

B. Install clamp-on connectors only on thoroughly cleaned and metal contact surfaces, to ensure electrical conductivity and circuit integrity.

C. Provide grounding for the entire raceway, enclosure, equipment and device system in accordance with NEC. All non-metallic raceways shall include copper grounding conductor sized in accordance with NEC. Include copper grounding conductor in all raceway installed in suspended slabs.

D. Provide service entrance grounding by means of ground rods (quantity of two, driven exterior to building), by means of bonding to water main, and by means of bonding to building structural steel. In addition, provide a grounding electrode for not less than 30 lineal feet in concrete footing or foundation that is in direct contract with earth. Size electrode in accordance with NEC, but in no case, smaller than No. 4 AWG bare copper. Support electrode so as to be below finished grade near the bottom of the trench, and approximately three inches from the bottom or sides of the concrete. Locate a point of

© BNA Consulting

connection for inspection.

E. Provide grounding conductors for dimming systems in accordance with manufacturer's requirement.

3.2 GROUNDING ELECTRODES:

A. Concrete Encased Grounding Electrode (UFER Ground): Provide a #2/0 AWG minimum bare copper conductor encased along the bottom of concrete foundation or footings that are in direct contact with the earth and where there is no impervious water-proofing membrane between the footing and the soil. Extend electrode through a horizontal length of 30 feet minimum and encase with not less than 2 nor more than 5 inches of concrete separating it from surrounding soils. At point of emergence from concrete, run electrode through a protective non-metallic sleeve and extend to the main building reference ground bus.

B. Separately Derived Electrical System Grounding Electrode: Ground each separately derived system per requirements in NEC Section 250-26 unless indicated otherwise.

C. GROUNDING ELECTRODE CONDUCTOR: Provide grounding electrode conductor sized per NEC table 250-94 or as indicated.

D. POWER SYSTEM GROUNDING: Connect the following items using NEC sized copper grounding conductors to lugs on the Main Building Ground Bus.

1. Grounding electrode conductor from concrete encased electrode, and from ground rods, and from service entrance ground bus.
2. Conductor from main incoming cold water piping system.
3. Conductor from building structural steel.
4. Ground for separately derived systems.

E. Run main grounding conductors exposed or in metallic conduit if protection or concealment is required.

F. EQUIPMENT BONDING/GROUNDING: Provide a NEC sized conductor, whether indicated or not on the drawings, in raceways as follows:

1. Non-metallic conduits and ducts.
2. Distribution feeders.
3. Motor and equipment branch circuits.
4. Device and lighting branch circuits.
5. Provide grounding bushings and bonding jumpers for all conduit terminating in reducing washers, concentric, eccentric or oversized knockouts at panelboards, cabinets and gutters.

G. Provide bonding jumpers across expansion and deflection couplings in conduit runs, across pipe connections at water meters, and across dielectric couplings in metallic cold water piping system.

H. Provide bonding wire in all flexible conduit.

3.3 TESTING:

A. Obtain and record ground resistance measurements both from service entrance ground bus to the ground electrode and from the ground electrode to earth. Install additional bonding and grounding electrodes as required to comply with resistance limits specified under this Section.

B. Include typewritten records of measured resistance values in the Operation and Maintenance Manual.

C. Use independent testing agency for all testing.

© BNA Consulting

D. Use test equipment expressly designed for the purpose intended. Submit name of testing agency for review and approval, in writing, to the Engineer prior to the performance of any testing.

END OF SECTION 26 0526

© BNA Consulting

SECTION 26 0529 - SUPPORTING DEVICES

PART 1 – GENERAL

1.1 RELATED DOCUMENTS:

A. Drawings and general provisions of Contract, including General and Supplementary Conditions and Division-1 Specification section, apply to work of this section.

B. This section is a Division-26 Basic Materials and Methods section, and is a part of each Division-26, 27 and 28 section making reference to supports, anchors, sleeves, and seals, specified herein.

1.2 DESCRIPTION OF WORK:

A. Extent of supports, anchors, and sleeves is indicated by drawings and schedules and/or specified in other Division-26 sections. See Section 260532, Raceways, for additional requirements.

B. Work of this section includes supports, anchors, sleeves and seals required for a complete raceway support system, including but not limited to: clevis hangers, riser clamps, C-clamps, beam clamps, one and two hole conduit straps, offset conduit clamps, expansion anchors, toggle bolts, threaded rods, U-channel strut systems, threaded rods and all associated accessories.

1.3 QUALITY ASSURANCE:

A. Comply with NEC as applicable to construction and installation of electrical supporting devices. Comply with applicable requirements of ANSI/NEMA Std. Pub No. FB 1, "Fittings and Supports for Conduit and Cable Assemblies". Provide electrical components that are UL-listed and labeled.

PART 2 - PRODUCTS

2.1 MANUFACTURED SUPPORTING DEVICES:

A. GENERAL:

1. Provide supporting devices; complying with manufacturer's standard materials, design and construction in accordance with published product information, and as required for a complete installation; and as herein specified. See drawings for additional requirements.

PART 3 - EXECUTION

3.1 INSTALLATION OF SUPPORTING DEVICES:

A. Install hangers, anchors, sleeves, and seals as required, in accordance with manufacturer's written instructions and with recognized industry practices to ensure supporting devices comply with requirements. Comply with requirements of NECA, NEC and ANSI/NEMA for installation of supporting devices.

B. Coordinate with other electrical work, including raceway and wiring work, as necessary to interface installation of supporting devices with other work.

C. Install hangers, supports, clamps and attachments to support piping properly from building structures. Arrange for grouping of parallel runs of horizontal conduits to be supported together on trapeze type hangers where possible. For pre-and post tensioned construction, use pre-set inserts for support of all electrical work. Do not use toggle bolts, moly bolts, wood plugs or screws in sheetrock or plaster as support for any equipment or raceway.

© BNA Consulting

D. RACEWAYS:

1. Support raceways that are rigidly attached to structure at intervals not to exceed 8 feet on center, minimum of two straps per 10 foot length of raceway, and within 12" of each junction box, coupling, outlet or fitting. Support raceway at each 90° degree bend. Support raceway (as it is installed) in accordance with the following:

NUMBER OF RUNS	3/4" TO 1-1/4" 0	1-1/2" & LARGER 0
1	Full straps, clamps or hangers.	Hanger
2	Full straps, clamps or hangers.	Mounting Channel
3 or more	Mounting Channel	Mounting Channel

2. Support suspended raceways on trapeze hanger systems; or individually by means of threaded rod and straps, clamps, or hangers suitable for the application. Do not use independent support wires as a portion of any raceway support system; do not support raceway from ceiling support wires.

E. FLOOR MOUNTED EQUIPMENT:

1. Provide rigid attachment of all floor mounted equipment to the floor slab or structural system. Provide 5/8" bolts or expansion anchors at each 90 degree corner and at intervals not to exceed 48" on center along entire perimeter of the equipment. Provide rigid attachment for all floor mounted switchboards, panelboards, power and control equipment, motor control centers, dimmer cabinets, transformers (provide neoprene vibrations isolators at anchor points), oil switches, battery packs and racks, and similar equipment furnished under Division 26, 27 and 28.

F. WIREWAYS:

1. Provide vertical and lateral support systems for all wireways, busway, and cable trays that are supported from overhead structure.

END OF SECTION 26 0529

© BNA Consulting

SECTION 26 0532 - CONDUIT RACEWAY

PART 1 – GENERAL

1.1 RELATED DOCUMENTS:

A. Drawings and general provisions of Contract, including General and Supplementary Conditions and Division 1 Specification sections, apply to work of this section.

B. This section is a Division-26 Basic Materials and Methods section, and is part of each Division-26 section making reference to electrical raceways and specified herein.

1.2 DESCRIPTION OF WORK:

A. Extent of raceways is indicated by drawings and schedules.

B. Types of raceways in this section include the following:

1. Electrical Metallic Tubing
2. Flexible Metal Conduit
3. Intermediate Metal Conduit
4. Liquid-tight Flexible Metal Conduit
5. Rigid Metal Conduit
6. Rigid Non-metallic Conduit

1.3 QUALITY ASSURANCE:

A. MANUFACTURERS: Firms regularly engaged in manufacture of raceway systems of types and sizes required, whose products have been in satisfactory use in similar service for not less than three (3) years.

B. STANDARDS: Comply with applicable portions of NEMA standards pertaining to raceways. Comply with applicable portions of UL safety standards pertaining to electrical raceway systems; and provide products and components that have been UL-listed and labeled. Comply with NEC requirements as applicable to construction and installation of raceway systems.

C. SUBMITTALS: Refer to Section 26 0502 for requirements.

PART 2 – PRODUCTS

2.1 METAL CONDUIT AND TUBING:

A. GENERAL:

1. Provide metal conduit, tubing and fittings of types, grades, sizes and weights (wall thicknesses) as indicated; with minimum trade size of 3/4".

B. RIGID METAL CONDUIT (RMC): FS WW-C-0581 and ANSI C80.1.

C. INTERMEDIATE STEEL CONDUIT (IMC): FS WW-C-581.

D. PVC EXTERNALLY COATED RIGID STEEL CONDUIT: ANSI C80.1 and NEMA Std. Pub. No. RN 1.

E. ALUMINUM CONDUIT: Not acceptable.

F. MC CABLE:

1. The use of MC-PCS cable is acceptable for light fixture whips utilizing 0-10v control schemes, not longer than 72” in length, located above removable grid ceilings. All MC cable shall be provided with anti-short fittings.

a. Acceptable Manufacturers

© BNA Consulting

i. AFC – MC Luminary Cable

ii. Encore – MC-LED Lighting Cable

iii. Southwire – MC-PCS Duo

G. RIGID AND INTERMEDIATE STEEL CONDUIT FITTINGS:

1. Provide fully threaded malleable steel couplings; raintight and concrete tight where required by application. Provide double locknuts and metal bushings at all conduit terminations. Install OZ Type B bushings on conduits 1-1/4" and larger.

H. ELECTRICAL METALLIC TUBING (EMT): FS WW-C-563 and ANSI C80.3.

I. EMT FITTINGS:

1. Provide insulated throat nylon bushings with non-indenter type malleable steel fittings at all conduit terminations. Install OZ Type B bushings on conduits 1" larger. Cast or indenter type fittings are not acceptable.

J. FLEXIBLE METAL CONDUIT: FS WW-C-566, of the following type;

1. Zinc-coated steel.

K. FLEXIBLE METAL CONDUIT FITTINGS: FS W-F-406, Type 1, Class 1, and Style A.

L. LIQUID TIGHT FLEXIBLE METAL CONDUIT:

1. Provide liquid-tight, flexible metal conduit; constructed of single strip, flexible continuous, interlocked, and double-wrapped steel; galvanized inside and outside; coated with liquid-tight jacket of flexible polyvinyl chloride (PVC).

M. LIQUID-TIGHT FLEXIBLE METAL CONDUIT FITTINGS: FS W-F-406, Type 1, Class 3, Style G.

N. EXPANSION FITTINGS: OZ Type AX, or equivalent to suit application.

2.2 NON-METALLIC CONDUIT AND DUCTS:

A. GENERAL:

1. Provide non-metallic conduit, ducts and fittings of types, sizes and weights as indicated; with minimum trade size of 3/4".

B. UNDERGROUND PVC PLASTIC UTILITIES DUCT:

1. Minimum requirements shall be schedule 40 for encased burial in concrete and for Type II for direct burial.

C. PVC AND ABS PLASTIC UTILITIES DUCT FITTINGS:

D. ANSI/NEMA TC 9, match to duct type and material.

E. HDPE CONDUIT: Not acceptable.

2.3 CONDUIT; TUBING; AND DUCT ACCESSORIES:

A. Provide conduit, tubing and duct accessories of types and sizes, and materials, complying with manufacturer's published product information, that mate and match conduit and tubing. Provide manufactured spacers in all duct bank runs.

2.4 SEALING BUSHINGS:

A. Provide OZ Type FSK, WSK, or CSMI as required by application. Provide OZ type CSB internal sealing bushings.

2.5 CABLE SUPPORTS:

A. Provide OZ cable supports for vertical risers, type as required by application.

© BNA Consulting

PART 3 - EXECUTION

3.1 INSTALLATION OF ELECTRICAL RACEWAYS:

A. Install electrical raceways where indicated; in accordance with manufacturer's written instructions, applicable requirements of NEC and NECA "Standard of Installation", and in accordance with the following:

1. SERVICE ENTRANCE CONDUCTORS, AND CONDUCTORS OVER 600 VOLTS:

   a. Install in rigid metal conduit (RMC), or intermediate metal conduit (IMC); except where buried below grade, install in non-metallic conduit or duct, individually encased in concrete. See duct banks.

2. FEEDERS UNDER 600 VOLTS:

   a. Install feeders to panels and motor control centers and individual equipment feeders rated 100 amps and greater, in rigid metal conduit (RMC), or intermediate metal conduit (IMC), or Electrical Metallic Tubing (EMT); except where buried below grade, install in non-metallic conduit or duct. Encase feeders 1-1/4" and larger, individually in concrete where installed below grade. See duct banks.

3. BRANCH CIRCUITS, SIGNAL AND CONTROL CIRCUITS, AND INDIVIDUAL EQUIPMENT CIRCUITS RATED LESS THAN 100 AMPS:

   a. Install in non-metallic sheathed cable (Romex). Below concrete slab-on-grade or in earth fill, install in non-metallic plastic duct. In areas exposed to weather, moisture, or physical damage, install in RMC or IMC. In suspended slabs, install in PVC.

B. Coordinate with other work including metal and concrete deck work, as necessary to interface installation of electrical raceways and components.

C. Install raceway in accordance with the following:

1. Provide a minimum of 12" clearance measured from outside of insulation from flues, steam and hot water piping, etc. Avoid installing raceways in immediate vicinity of boilers and similar heat emitting equipment. Conceal raceways in finished walls, ceilings and floor (other than slab-on-grade), except in mechanical, electrical and/or communication rooms, conceal all conduit and connections to motors, equipment, and surface mounted cabinets unless exposed work is indicated on the drawings. Run concealed conduits in as direct a line as possible with gradual bends. Where conduit is exposed in mechanical spaces, etc., install parallel with or at right angles to building or room structural lines. Do not install lighting raceway until piping and duct work locations have been determined in order to avoid fixtures being obstructed by overhead equipment.

2. Where cutting raceway is necessary, remove all inside and outside burrs; make cuts smooth and square with raceway. Paint all field threads (or portions of raceway where corrosion protection has been damaged) with primer and enamel finish coat to match adjacent raceway surface.

3. Provide a minimum of 1 ½” from nearest surface of the roof decking to raceway.

4. Provide a maximum of three phase conductors in any one conduit or as approved by electrical engineer. Where phase conductors share a common neutral they must have a means to simultaneously disconnect all ungrounded conductors at the point where the branch circuits originate. The ungrounded and neutral conductors of a multi-wire branch circuit must be grouped together by wire ties at the point of origination.

5. Provide neutral and ground wire as specified elsewhere in documents.

© BNA Consulting

6. Provide separate neutral conductor for all single phase branch circuits installed. No shared neutrals are allowed. Neutral conductor shall be the same size as the phase conductor.

D. Comply with NEC for requirements for installation of pull boxes in long runs.

E. Cap open ends of conduits and protect other raceways as required against accumulation of dirt and debris. Pull a mandrel and swab through all conduit before installing conductors. Install a 200 lb. nylon pull cord in each empty conduit run.

F. Replace all crushed, wrinkled or deformed raceway before installing conductors.

G. Do not use flame type devices as a heat application to bend PVC conduit. Use a heating device that supplies uniform heat over the entire area without scorching the conduit.

H. Provide rigid metal conduit (RMC) for all bends greater than 22 degrees in buried conduit. Provide protective coating for RMC bend as specified herein.

I. Where raceways penetrate building, area ways, manholes or vault walls and floors below grade, install rigid metal conduit (RMC) for a minimum distance of 10 feet on the exterior side of the floor or wall measured from interior face. Provide OZ, Type FSK, WSK or CSMI sealing bushings (with external membrane clamps as applicable) for all conduit penetrations entering walls or slabs below grade. Provide segmented type CSB internal sealing bushings in all raceways penetrating building walls and slabs below grade, and in all above grade raceway penetrations susceptible to moisture migration into building through raceway.

J. Install liquid-tight flexible conduit for connection of motors, transformers, and other electrical equipment where subject to movement and vibration.

K. Install spare 3/4" conduits (capped) from each branch panelboard into the ceiling and floor space. Run five into the ceiling space and five into the floor space. Where the floor is not accessible run six conduits into the ceiling space. Run conduits the required distance necessary to reach accessible ceiling space.

L. Provide OZ expansion fittings on all conduits crossing building expansion joints, both in slab and suspended.

M. Provide OZ cable supports in all vertical risers in accordance with NEC 300-19; type as required by application.

N. Complete installation of electrical raceways before starting installation of cables/conductors within raceways.

O. Raceway installation below grade:

1. Apply protective coating to metallic raceways in direct contact with earth or fill of any type; consisting of spirally wrapped PVC tape (1/2" minimum overlap of scotch wrap tape or equal); or factory applied vinyl cladding (minimum thickness .020 inches). Completely wrap and tape all field joints.

2. Burial depths must comply with NEC Section 300-5 but in no case be less than 24", unless noted otherwise on drawings.

P. Raceway installation below slab-on-grade, or below grade:

1. For slab-on-grade construction, install runs of rigid plastic conduit (PVC) below slab. All raceway shall be located a minimum of 8” below bottom of slab. Install RMC (with protective coating) for raceways passing vertically through slab-on-grade. Slope raceways as required to drain away from electrical enclosures and to avoid collection of moisture in raceway low points.

2. Apply protective coating to metallic raceways in direct contact with earth or fill of any type; consisting of spirally wrapped PVC tape (1/2" minimum overlap of scotch wrap tape or equal); or factory applied vinyl cladding (minimum thickness .020 inches). Completely wrap and tape all field joints.

© BNA Consulting

3. Mark all buried conduits that do not require concrete encasement by placing yellow plastic marker tape (minimum 6" wide) along entire length of run 12" below final grade. Where multiple small lines are buried in a common trench and do not exceed an overall width of 16", install a single line marker.

4. Burial depths must comply with NEC Section 300-5 but in no case be less than 24", unless noted otherwise on drawings.

Q. MC CABLE:

1. MC Cable shall be supported and secured as follows:

a. Cables shall be supported at intervals not exceeding 6 feet.

b. Cables shall be secured with 12 inches of every box, cabinet, fitting or other cable termination.

R. Raceway installation in hazardous locations:

1. Install RMC in all hazardous locations as defined by NEC. Provide suitable fittings, seal-offs, boxes, etc. to comply with requirements.

2. Engage at least five full threads on all fittings. Provide inspection fittings with explosion proof drains to prevent water accumulation in conduit runs. Install seal-offs for arcing or high temperature equipment, at housing with splices or taps and where conduits enter or leave the hazardous area. Provide seal-offs of the appropriate type for vertical or horizontal installation. Ground all metallic parts.

S. Electrical Identification: Refer to Section 260553 for requirements.

T. SPARE PARTS: Refer to Section 26 0502 for requirements.

END OF SECTION 26 0532

© BNA Consulting

BLANK PAGE

© BNA Consulting

SECTION 26 0533 - ELECTRICAL BOXES AND FITTINGS

PART 1 – GENERAL

1.1 RELATED DOCUMENTS:

A. Drawings and general provisions of Contract, including General and Supplementary Conditions and Division-1 Specifications sections, apply to work of this section.

B. This section is a Division-26 Basic Materials and Methods section, and is a part of each Division-26, 27 and 28 section making reference to electrical wiring boxes and fittings specified herein. See Section 260532, Raceways, for additional requirements.

1.2 DESCRIPTION OF WORK:

A. The extent of electrical box and electrical fitting work is indicated by drawings and schedules.

B. Types of electrical boxes and fittings in this section include the following:

1. Outlet Boxes
2. Junction Boxes
3. Pull Boxes
4. Conduit Bodies
5. Bushings, Locknuts and Knockout Closures
6. Miscellaneous Boxes and Fittings

1.3 QUALITY ASSURANCE:

A. Comply with NEC as applicable to construction and installation of electrical boxes and fittings. Comply with ANSI C 134,1 (NEMA Standards Pub No. OS 1) as applicable to sheet-steel outlet boxes, device boxes, covers and box supports. Provide electrical boxes and fittings that have been UL-listed and labeled.

1.4 SUBMITTALS: Refer to Section 26 0502 for requirements.

PART 2 - PRODUCTS

2.1 FABRICATED MATERIALS:

A. INTERIOR OUTLET BOXES:

1. When using non-metallic sheathed cable:

   a. Provide one piece, PVC interior outlet wiring boxes with accessory rings, of types, shapes and sizes, including box depths, to suit each respective location and installation, construct with stamped knockouts in back and sides, and with threaded screw holes with corrosion-resistant screws for securing box and covers and wiring devices; minimum size 4"x4"x2-1/8".

2. When using MC Cable:

   a. Provide one piece, galvanized flat rolled sheet steel interior outlet wiring boxes with accessory rings, of types, shapes and sizes, including box depths, to suit each respective location and installation, construct with stamped knockouts in back and sides, and with threaded screw holes with corrosion-resistant screws for securing box and covers and wiring devices; minimum size 4"x4"x2-1/8".

3. Provide an ‘FS’ box, with no knockouts when surface mounted in a finished, non-utility space. Surface mounting is only acceptable when approved by the Architect.

B. INTERIOR OUTLET BOX ACCESSORIES:

© BNA Consulting

1. Provide outlet box accessories as required for each installation, including mounting brackets, hangers, extension rings, fixture studs, cable clamps and metal straps for supporting outlet boxes, that are compatible with outlet boxes being used and fulfilling requirements of individual wiring applications.

C. WEATHERPROOF OUTLET BOXES:

1. Provide corrosion-resistant PVC weatherproof outlet wiring boxes, of types, shapes and sizes (including depth) required.

D. JUNCTION AND PULL BOXES:

1. Provide code-gage sheet steel junction and pull boxes, with screw-on covers; of types, shapes and sizes to suit each respective location and installation; with welded seams and equipped with stainless steel nuts, bolts, screws and washers.

E. CONDUIT BODIES:

1. Provide galvanized cast-metal conduit bodies, of types, shapes and sizes to suit respective locations and installation, construct with threaded-conduit-entrance ends, removable covers, and corrosion-resistant screws.

F. BUSHINGS, KNOCKOUT CLOSURES AND LOCKNUTS:

1. Provide corrosion-resistant punched-steel box knockout closures, conduit locknuts and malleable steel conduit bushings and offset connectors, of types and sizes to suit respective uses and installation.

PART 3 - EXECUTION

3.1 INSTALLATION OF ELECTRICAL BOXES AND FITTINGS:

A. GENERAL:

1. Install electrical boxes and fittings where indicated, complying with manufacturer's written instructions, applicable requirements of NEC and NECA's "Standard of Installation", and in compliance with recognized industry practices to ensure that products fulfill requirements.
2. Coordinate installation of electrical boxes and fittings with wire/cable and raceway installation work.
3. Provide coverplates for all boxes. See Section 262726, Wiring Devices.
4. Provide weatherproof outlets for interior and exterior locations exposed to weather or moisture.
5. Provide knockout closures to cap unused knockout holes where blanks have been removed.
6. Install boxes and conduit bodies to ensure ready accessibility of electrical wiring. Do not install boxes above ducts or behind equipment. Install recessed boxes with face of box or ring flush with adjacent surface. Seal between switch, receptacle and other outlet box openings and adjacent surfaces with plaster, grout, or similar suitable material.
7. Fasten boxes rigidly to substrates or structural surfaces, or solidly embed electrical boxes in concrete or masonry. Use bar hangers for stud construction. Use of nails for securing boxes is prohibited. Set boxes on opposite sides of common wall with minimum 10" of conduit between them. Set boxes on opposite sides of fire resistant walls with minimum of 24” separation.
8. Provide a minimum of 1 ½” from the nearest surface of the roof decking to the installed boxes.
9. Provide electrical connections for installed boxes.

END OF SECTION 26 0533

© BNA Consulting

SECTION 26 0553 - ELECTRICAL IDENTIFICATION

PART 1 - GENERAL

1.1 RELATED DOCUMENTS:

A. Drawings and general provisions of Contract, including General and Supplementary Conditions and Division-1 Specification sections, apply to work of this section.

B. Requirements of the following Division 26 Sections apply to this section:

1. “Basic Electrical Requirements”.
2. “Basic Electrical Materials and Methods”.

1.2 SUMMARY

A. This section includes identification of electrical materials, equipment and installations. It includes requirements for electrical identification components including but not limited to the following:

1. Buried electrical line warnings.
2. Identification labels for raceways, cables and conductors.
3. Operational instruction signs.
4. Warning and caution signs.
5. Equipment labels and signs.
6. Arc-flash hazard labels

B. Related Sections: The following sections contain requirements that relate to this section:

C. Division 9 Section “Painting” for related identification requirements.

D. Refer to other Division 26 sections for additional specific electrical identification associated with specific items.

1.3 QUALITY ASSURANCE

A. Electrical Component Standard: Components and installation shall comply with NFPA 70 “National Electrical Code”

1.4 SUBMITTALS: Refer to Section 26 0502 for requirements.

PART 2 – PRODUCTS

2.1 MANUFACTURERS

A. Manufacturers: Subject to compliance with requirements, provide products by the following:

1. American Labelmark Co.
2. Calpico, Inc.
3. Cole-Flex Corp.
4. Emed Co., Inc.
5. George-Ingraham Corp.
6. Ideal Industries, Inc.
7. Kraftbilt
8. LEM Products, Inc.
9. Markal Corp
10. National Band and Tag Co.

© BNA Consulting

11. Panduit Corp.
12. Radar Engineers Div., EPIC Corp.
13. Seton Name Plate Co.
14. Standard Signs, Inc.
15. W.H Brady, Co.

2.2 ELECTRICAL IDENTIFICATION PRODUCTS

A. Colored Conduit Systems for raceway identification:
   1. Factory-painted conduit and/or factory-painted couplings and fittings

B. Colored paint for raceway identification:
   1. Use Kwal Paint colors as specified in Part 3 – Execution.

C. Color Adhesive Marking Tape for Raceways, Wires and Cables:
   1. Self-adhesive vinyl tape not less than 3 mills thick by 1” to 2” in width.

D. Underground Line Detectable Marking Tape:
   1. Permanent, bright colored, continuous-printed, acid- and alkali-resistant plastic tape specifically compounded for direct-burial service. Not less than 6” wide by 4 mills thick.
   2. With metallic core encased in a protective jacket for corrosion protection, detectable by metal detector when tape is buried up to 30 inches deep.
   3. Printed legend indicative of general type of underground line below.

E. Wire/Cable Designation Tape Markers:
   1. Vinyl or vinyl-cloth, self-adhesive, wraparound, cable/conductor markers with pre-printed numbers and letters.

F. Brass or Aluminum Tags:
   1. Metal tags with stamped legend, punched for fastener.
   2. Dimensions: 2” X 2” 19 gage.

G. Engraved, Plastic Laminated Labels, Signs and Instruction Plates:
   1. Engraving stock plastic laminate, 1/16” minimum thickness for signs up to 20 sq. in. or 8” in length; 1/8 “ thick for larger sizes. Engraved legend in 1/4” high white letters on black face and punched for mechanical fasteners.

H. Arc-flash Hazard Labels:
   1. ANSI Z535.4 Safety Label.
   2. Adhesive backed polyester with self-laminating flap. Chemical, abrasion and heat resistant.
   3. Dimensions: 5” x 3.5”
   4. Information contained: Arc-flash boundary; Voltage; Flash Hazard Category; Incident Energy (arc rating); checkboxes for the required Personal Protective Equipment (PPE) and the date that the calculations were performed.

I. Equipment Labels:
   1. Adhesive backed polyester with self-laminating flap. Chemical, abrasion and heat resistant.
   2. Dimensions: minimum 5” x 2”
   3. Conductor-Identification-Means Labels:
      a. Information contained: the method utilized for identifying ungrounded conductors within switchboards, distribution panels and branch circuit panels.

© BNA Consulting

4. Available-Fault-Current Labels:
   a. Information contained: maximum available fault current at the respective piece of equipment, and date of calculation of fault current.
5. Source-of-Supply Labels:
   a. Information contained: indicate the device or equipment where the power supply originates.

J. Baked Enamel Warning and Caution Signs for Interior Use:
1. Preprinted aluminum signs, punched for fasteners, with colors legend and size appropriate to location.

K. Fasteners for Plastic-Laminated and Metal Signs:
1. Self-tapping stainless steel screws or # 10/32 stainless steel machine screws with nuts, flat and lock washers.

L. Cable Ties:
1. Fungus-inert, self-extinguishing, one-piece, self-locking nylon cable ties, 0.18" minimum width, 50-lb. Minimum tensile strength, and suitable for a temperature range from minus 40° F. to 185° F. Provide ties for specified colors when used for color coding.

PART 3 – EXECUTION

3.1 INSTALLATION

A. Lettering and Graphics:
1. Coordinate names, abbreviations, colors and other designations used in electrical identification work with corresponding designations specified or indicated. Install numbers, lettering and colors as approved in submittals and as required by code.

B. Install identification devices in accordance with manufacturer's written instructions and requirements of NEC.

C. Sequence of Work:
1. Where identification is to be applied to surfaces that require a finish, install identification after completion of finish work.

D. Conduit Identification:
1. Identify Raceways of Certain Systems with Color Coding. Acceptable means of color identification are as follows:
   a. Colored adhesive marking tape.
   b. Field-painted colored bands.
   c. Factory-painted conduit.
   d. Color exposed or accessible raceways of the following systems for identification. Make each color band 2 inches wide, completely encircling conduit. Apply bands at changes in direction, at penetrations of walls and floors, and at 20-foot maximum intervals in straight runs. Apply the following colors:
      i. Fire Alarm System: Red
      ii. Sound/IC: Blue
      iii. Telephone: Yellow
      iv. Data: Green
      v. MATV: Black
      vi. Security: Orange
2. Identify Junction, Pull and Connection Boxes.

© BNA Consulting

a. Code-required caution sign for boxes shall be pressured-sensitive, self-adhesive label indication system voltage in black, preprinted on orange background. Install on outside of box cover. Also label box covers on outside of cover with identity of contained circuits. Use pressure-sensitive plastic labels at exposed locations and similar labels or plasticized card stock tags at concealed boxes.

3. Label and paint the covers of the systems junction boxes as follows:

SYSTEM	COLOR (ALL COLORS ARE KWAL PAINT)	
Fire Alarm	Red Alert	AC118R
Sound/IC	Neon Blue	7076A
Telephone	Competition Yellow	7225A
Data	Java Green	AC098N
MATV	Flat Black	
Security	Fiesta Orange	AC107Y

E. Underground Electrical Line Identification.

1. During trench backfilling, for exterior underground power, signal, and communications lines, install continuous underground line detectable marking tape, located directly above line at 6 to 8 inches below finished grade. Where multiple lines are installed in a common trench or concrete envelope, do not exceed an overall width of 16 inches; install a single line marker.

2. Install detectable marking tape for all underground wiring, both direct-buried and in raceway.

3. Provide red marker dye applied to concrete encased ductbank.

F. Conductor Color Coding.

1. Provide color coding for secondary service, feeder and branch circuit conductors throughout the project secondary electrical system as follows:

CONDUCTOR	208Y / 120V System	480Y / 277V System
Phase A	Black	Brown
Phase B	Red	Orange
Phase C	Blue	Yellow
Shared/Single Neutral	White	Gray
Neutral A (dedicated)	White w/Black Stripe	Gray w/Black Stripe
Neutral B (dedicated)	White w/Red Stripe	Gray w/Orange Stipe
Neutral C (dedicated)	White w/Blue Stripe	Gray w/Yellow Stipe
Equipment Ground	Green	Green
Isolated Ground	Green w/Yellow Strip	Green w/Yellow Stripe

2. Switch legs, travelers and other wiring for branch circuits shall be of colors other than those listed above.

3. Use conductors with color factory applied the entire length of the conductors except as follows:

a. The following field-applied color-coding methods may be used in lieu of factory-coded wire for sizes larger than No. 10 AWG.

© BNA Consulting

b. Apply colored, pressure-sensitive plastic tape in half-lapped turns for a distance of 6 inches from terminal points and in boxes where splices or taps are made. Apply the last two laps of tape with no tension to prevent possible unwinding. Use 1-inch-wide tape in colors as specified. Do not obliterate cable identification markings by taping. Tape locations may be adjusted slightly to prevent such obliteration.

c. In lieu of pressure-sensitive tape, colored cable ties may be used for color identification. Apply three ties of specified color to each wire at each terminal or splice point starting 3 inches from the terminal and spaced 3 inches apart. Apply with a special tool or pliers, tighten for snug fit, and cut off excess length.

G. Power Circuit Identification.

1. Securely fasten identifying metal tags or aluminum wraparound marker bands to cables, feeders, and power circuits in vaults, pull boxes, junction boxes, manholes, and switchboard rooms with 1/4-inch steel letter and number stamps with legend to correspond with designations on Drawings. If metal tags are provided, attach them with approximately 55-lb monofilament line or one-piece self-locking nylon cable ties.

2. Tag or label conductors as follows:

a. Future Connections: Conductors indicated to be for future connection or connection under another contract with identification indicting source and circuit numbers.

b. Multiple Circuits: Where multiple branch circuits or control wiring or communications/ signal conductors are present in the same box or enclosure (except for three-circuit, four-wire home runs), label each conductor or cable. Provide legend indicating source, voltage, circuit number, and phase for branch circuit wiring. Phase and voltage of branch circuit wiring may be indicated by mean of coded color of conductor insulation. For control and communications/signal wiring, use color coding or wire/cable marking tape at terminations and at intermediate locations where conductors appear in wiring boxes, troughs, and control cabinets. Use consistent letter/number conductor designations throughout on wire/cable marking tapes.

3. Match identification markings with designations used in panelboards shop drawings, Contract Documents, and similar previously established identification schemes for the facility’s electrical installations.

H. Apply warning, caution and instruction signs and stencils as follows:

1. Install warning, caution, or instruction signs where required by NEC, where indicated, or where reasonably required to assure safe operation and maintenance of electrical systems and of the items they connect. Install engraved plastic-laminated instruction signs with approved legend where instructions or explanations are needed for system or equipment operation. Install butyrate signs with metal backing for outdoor items. Warning and caution signs shall be furnished and installed on, but not be limited to the following equipment and locations:

a. Entrances to rooms and other guarded locations that contain exposed live parts 600 volts or less; signs shall forbid unqualified personnel to enter.

b. Switch and Overcurrent device enclosures with splices, taps and feed-through conductors. Provide warning label on the enclosures that identifies the nearest disconnecting means for any feed-through conductors.

c. Entrances to buildings, vaults, rooms or enclosures containing exposed live parts or exposed conductors operating at over 600 volts: DANGER-HIGH VOLTAGE-KEEP OUT.

© BNA Consulting

d. Metal-enclosed switchgear, unit substations, transformers, enclosures, pull boxes, connection boxes and similar equipment operating at over 600 volts shall have appropriate caution signs and warning labels.

e. Indoor and Outdoor substations operating over 600 volts. Provide warning signs, instructional signs and single-line diagrams in accordance with NEC 225.70.

I. Emergency Operating Signs: Install engraved laminated signs with white legend on red background with minimum 3/8-inch high lettering for emergency instructions on power transfer, load shedding, or other emergency operations.

J. Install equipment/system circuit/device identification as follows:

1. Apply equipment identification labels of engraved plastic-laminate on each major unit of electrical equipment in building, including central or master unit of each electrical system. This includes communication/signal/alarm systems, unless unit is specified with its own self-explanatory identification. Except as otherwise indicated, provide single line of text, with 1/4“-high lettering on 1-inch-high label (1 1/2-inch-high where two lines are required) white lettering in black field. White lettering in red field for Emergency Power Systems. Text shall match terminology and numbering of the Contract Documents and shop drawings. Apply labels for each unit of the following categories of electrical equipment.

a. Each service disconnect, to identify it as a service disconnect.

b. Panelboards (exterior and interior), electrical cabinets, and enclosures. For subpanels, identify feeder circuit served from.

c. Switches in fusible panelboards shall be labeled. Main switches shall be identified.

d. Access doors and panels for concealed electrical items.

e. Electrical switchgear and switchboards.

f. Motor control centers.

g. Motor starters, including circuit origination, HP, heater size, FLA, and mechanical equipment designation.

h. Disconnect switches.

i. Pushbutton stations.

j. Power transfer equipment.

k. Contactors.

l. Dimmers.

m. Control devices.

n. Transformers.

o. Power generating units, to include transfer switches.

p. Telephone switching equipment.

q. Clock/program master equipment.

r. Call system master station.

s. TV/audio monitoring master station.

t. Fire alarm master station or control panel.

u. Busduct – Label all cable tap boxes, bus plug-in units, etc. with plastic laminate labels designating load served.

v. Variable frequency drives.

w. Lighting Control Equipment.

x. Uninterruptable Power Supply.

K. Post Conductor-Identification-Means labels at locations of switchboards, distribution

© BNA Consulting

panels and branch circuit panels. The labels shall identify the color-coding used on ungrounded conductors for each voltage system used on the premises.

L. Apply Available-Fault-Current labels at the service entrance equipment.

M. Apply Source-of-Supply labels on the exterior covers of equipment (except in single- or two-family dwellings) as follows:

1. Each switchboard supplied by a feeder.
2. Each branch circuit panelboard supplied by a feeder.
3. Each disconnect switch serving elevators, escalators, moving walks, chairlifts, platform lifts and dumbwaiters.
4. Each dry type transformer (or primary-side disconnect switch at transformer). If the primary-side disconnect is remote from the transformer, both the remote disconnect and the transformer shall be labeled, and the transformer label shall also indicate the location of the disconnect.
5. Each feeder disconnect, branch circuit disconnect, panelboard or switchboard in a remote building or structure.
6. Each on-site emergency power source, with sign placed at service entrance equipment to comply with NEC 700.

N. The label shall identify the device or equipment where the power supply originates, and the system voltage and phase. For example: Feeder Power Supply for Panel “XX” Originates at Panel “XX” (or Switchboard “XX”, Transformer “XX”, Switch “XX”, etc.); 120/208 volts, 3-phase (or 120/240, 277/480, etc.).

O. Install Arc-flash hazard labels on the following equipment:

1. Each piece of service entrance equipment.
2. Each power distribution switchboard or panel.
3. Each branch circuit panelboard.

P. Apply circuit/control/item designation labels of engraved plastic laminate for disconnect switches, breakers, pushbuttons, pilot lights, motor control centers, and similar items for power distribution and control components above, except panelboards and alarm/signal components, where labeling is specified elsewhere.

Q. Install labels at locations indicated and at locations for best convenience of viewing without interference with operation and maintenance of equipment.

R. Engrave all receptacle plates other than those serving 120 volt, single phase devices. State voltage and amperage characteristics: Example; “208V 30A”.

S. Mark each device box (for each type of wiring device) with a permanent ink felt tip marker, indicating the circuit that the device is connected to: Example; “CKT A-1”

T. Label circuit breaker feeding fire alarm panel “Fire Alarm Circuit”. Using plastic laminate label, white lettering on a red background.

END OF SECTION 26 0553

© BNA Consulting

BLANK PAGE

© BNA Consulting

SECTION 26 0573 - PROTECTIVE DEVICE STUDY

PART 1 – GENERAL

1.1 RELATED DOCUMENTS

A. Drawings and general provisions of the Contract, including General and Supplementary conditions and Division 1 Specification sections, apply to work of this section.

1.2 DESCRIPTION OF WORK:

A. Studies in this section include the following:

1. Fault current protective device and equipment evaluation
2. Protective device coordination study
3. Arc-flash hazard analysis and study

1.3 QUALITY ASSURANCE:

A. Provide protective device and arc-flash hazard studies performed by qualified engineers of the equipment manufacturer or an approved consultant. Studies must bear the professional engineer's stamp of the engineer in responsible charge of the protective device studies. Perform all work in accordance with latest IEEE and ANSI standards.

1.4 SUBMITTALS: Refer to Section 26 0502 for requirements.

PART 2 – STUDIES

2.1 FAULT CURRENT PROTECTIVE DEVICE & EQUIPMENT EVALUATION

A. Perform fault current analysis with the aid of a computer and appropriate software. Include as input data the maximum available short circuit contribution, resistance and reactance components of the branch impedances, the X/R ratios, base quantities selected, and other source impedances.

B. Coordination Criteria:

1. All overcurrent protective devices serving the essential electrical system shall be coordinated for the period of time that a fault's duration extends <u>beyond 0.1 second</u>.

2. Coordination shall not be required as follows:

a. Between transformer primary and secondary overcurrent protective devices, where only one overcurrent protective device or set of overcurrent protective devices exist on the transformer secondary.

b. Between overcurrent protective devices of the same size (ampere rating) in series.

C. Calculate fault current close and latch duty values and interrupting duty values on the basis of assumed three-phase bolted short circuits at each switchgear bus, medium voltage controller, switchboard, low voltage motor control center, distribution panelboard, branch circuit panel and other significant locations throughout the system. Include symmetrical fault currents, and X/R ratios in the fault current tabulations. For each fault location, list the total duty on the bus, as well as the individual contribution from each connected branch, with its respective X/R ratio. Calculate ground fault currents at each bus. Incorporate major motor contributions in determining momentary and interrupting ratings of protection devices.

© BNA Consulting

D. Perform an evaluation to determine the adequacy of circuit breakers, molded case switches, automatic transfer switches, and fuses, by tabulating and comparing the short circuit ratings of these devices with the calculated fault currents. Apply appropriate multiplying factors based on system X/R ratios and protective device rating standards. Report problem areas or inadequacies in the equipment due to short circuit currents prior to release for fabrication of switchgear, switchboards and/or appliance panelboard.

2.2 PROTECTIVE DEVICE COORDINATION STUDY

A. Perform a protective device coordination study including the necessary calculations and logic decisions required to select power fuse ratings, protective relay characteristics and settings, ratios and characteristics of associated current transformers, and low voltage breaker trip characteristics and settings. Perform the studies in accordance with the latest applicable IEEE and ANSI standards.

B. Include all medium and low voltage classes of equipment in the coordination study from the building or plant service protective devices down to and including the largest rated device in the low voltage motor control centers and panelboards. Include the phase and ground overcurrent protection as well as settings of all other adjustable protective devices.

C. Develop time-current characteristics of the specified protective devices on log-log paper. Include complete titles, representative one-line diagram and legends, significant motor starting characteristics, complete parameters of transformers, complete operating bands of low voltage circuit breaker trip curves and fuses. Indicate on plots the types of protective devices selected, proposed relay taps, time dial and instantaneous trip settings, transformer magnetizing inrush and ANSI transformer withstand parameters, cable thermal overcurrent withstand limits and significant symmetrical and asymmetrical fault currents. Adhere to all restrictions of the National Electrical Code. Maintain proper coordination intervals and separation of characteristic curves.

D. Provide coordination plots for phase and ground protective devices on a system basis. Provide a sufficient number of separate curves to clearly indicate the coordination achieved.

E. Provide the selection and settings of the protective devices in a tabulated form listing circuit identification, IEEE device number, current transformer ratios and connection, manufacturer and type, range of adjustment and recommended settings. Provide a tabulation of the recommended power fuse selection for medium voltage fuses where applied in the system. Promptly report any discrepancies, problem areas, or inadequacies prior to release for fabrication of switchgear, switchboards and/or appliance panels.

2.3 ARC-FLASH HAZARD ANALYSIS AND STUDY

A. Perform an arc-flash hazard analysis and study. Include the necessary calculations required to determine the level of Personal Protection Equipment (PPE) that a worker must use, the Arc Flash Boundary in inches, and the incident energy at each location. This information shall be calculated and determined for each piece of service entrance equipment, each power distribution switchboard or panel, each separately-mounted circuit breaker, each motor control center, each individually mounted motor starter, and for each branch circuit panelboard.

B. Perform the analysis and study in accordance with IEEE 1584.

C. Furnish and install a label at each piece of service equipment, each power distribution switchboard or panel, each separately mounted circuit breaker, each motor control center, each individually mounted motor starter, and each branch circuit panel board. The label shall be an ANSI approved Arc Flash Warning Label that warns and instructs workers of the arc flash hazard, voltage, arc flash boundary, and required PPE (Personal Protective Equipment).

© BNA Consulting

2.4 ANALYSIS/REPORT

A. Include the following in the report.

1. Description, purpose, basis and scope of the study and a single line diagram of that portion of the power system that is included within the scope of the study.
2. Tabulations of circuit breaker, fuse and other protective device ratings versus calculated short circuit duties and commentary regarding same. Include formulas and description of methods used.
3. Protective device time versus current coordination curves, tabulations of relay and circuit breaker trip settings, fuse selection, and commentary regarding same.
4. Fault current calculations including a definition of terms and guide for interpretation of computer printout.
5. Recommended size for power fuses and recommended settings for ground fault relays and for all adjustable trip relays, circuit breakers, etc.
6. Tabulation of arc-flash calculations for each location and tabulation of arc-flash hazard, voltage, boundary and required PPE for each equipment item listed in the arc-flash analysis.

2.5 PROTECTIVE DEVICE TESTING, CALIBRATION AND ADJUSTMENT

A. Provide the services of a qualified field engineer employed by the equipment manufacturer, and necessary tools and equipment to test, calibrate and adjust the protective relays, ground fault relays and circuit breaker trip devices as recommended in the Protective Device Study.

2.6 TYPEWRITTEN DEVICE SETTING TABULATION:

A. Provide type written tabulation that includes all settings for each protective relay, ground fault relay and circuit breaker solid-state trip devices. Enclose the table in a protective plastic sleeve and affix to the main service entrance equipment.

END OF SECTION 26 0573

© BNA Consulting

BLANK PAGE

© BNA Consulting

SECTION 26 0923 - OCCUPANCY SENSORS

PART 1 – GENERAL

1.1 RELATED DOCUMENTS:

A. Drawings and general provisions of Contract, including General and Supplementary Conditions and Division-1 Specification sections, apply to work of this section.

B. This section is a Division-26 Basic Materials and Methods section, and is part of each Division-26 section making reference to wiring devices specified herein.

1.2 DESCRIPTION OF WORK:

A. The extent of occupancy sensor work is indicated by drawings and schedules.

B. Types of occupancy sensors in this section include the following:

1. Ultrasonic Ceiling Sensors
2. Passive Infrared Ceiling and Wall Mount Sensors
3. Control Pack
4. Passive Infrared Wall Switch
5. Dual Technology Wall Switch
6. Dual Technology Wall Switch with Dimming and Daylight Control.
7. Ultrasonic Wall Switch
8. Ultrasonic Ceiling Sensor with Daylight Control
9. Dual Technology Ceiling Sensor
10. Control Pack

1.3 QUALITY ASSURANCE:

A. Comply with NEC and NEMA standards as applicable to construction and installation of occupancy sensors. Provide occupancy sensors that have been UL listed and labeled.

B. All sensors shall be capable of operating normally with electronic ballasts, PL lamp systems, motor loads and any other passive infrared or microwave systems.

1.4 SUBMITTALS: Refer to Section 26 0502 for requirements.

PART 2 - PRODUCTS

2.1 MANUFACTURER: The manufacturer shall have a minimum of five years of experience in the sensor and lighting control industry. Sensors and related relays shall be compatible with the specific lighting types controlled. All sensors shall be of the same manufacturer, mixing brands of sensors is not acceptable.

A. ULTRASONIC (MICROPHONICS) CEILING SENSORS: Where units are indicated, provide a sensor that meets the following minimum requirements:

1. The sensor shall be Class 2, low voltage device capable of mounting to a wall or ceiling as required for optimum coverage.
2. Sensor shall incorporate one transmitter for each receiver oriented in the same direction.
3. Sensor shall be capable of being networked with additional units to achieve adequate coverage.
4. Sensor shall utilize a dry contact relay for control of lighting relay.
5. Sensor shall have adjustable sensitivity from 0% to 100% for coverage pattern.

© BNA Consulting

6. Sensor shall have time out adjustment from 15 seconds to 32 minutes. Timer shall use a timer chip and be linear in adjustment.
7. Sensitivity and timer controls shall be accessible on the front of the sensor, but recessed to inhibit tampering.
8. Sensor shall incorporate an accessible, but recessed, ON override device.
9. Sensor shall be easily mounted to a suspended ceiling tile without using large holes, or to a standard 4 x 4 box.
10. Sensor shall be available with more than one pair of transmitters/receivers to achieve coverage required.
11. Sensor shall incorporate a real time motion indicator visible from the front of the unit.
12. Transmitters/receivers shall be protected from damage.
13. Subject to compliance with the above requirements, provide models of one of the following:
    a. Hubbell-ATU Series
    b. Sensor Switch-CM PDT Series
    c. Wattstopper-WT Series
    d. Greengate OAC-U Series
    e. Leviton – OSC UOW Series

B. PASSIVE INFRARED CEILING AND WALL MOUNT SENSORS: Where units are indicated, provide a sensor that meets the following minimum requirements:

1. The sensor shall be Class 2, low voltage device capable of mounting to a wall or ceiling as required for optimum coverage.
2. Sensor shall utilize a dual element pyroelectric detector and a multi-segmented lens to achieve adequate coverage.
3. Sensor shall be capable of being networked with additional units to achieve adequate coverage.
4. Sensor shall utilize a dry contact relay for control of lighting relay.
5. Sensor shall have time out adjustment from 8 seconds to 32 minutes. Timer shall be linear in adjustment.
6. Sensor shall incorporate a motion indicator behind the lens array.
7. Ceiling mount sensor shall have a 360 degree field of view with a 34 foot diameter coverage pattern when mounted at a height of twelve feet.
8. Ceiling mount sensor shall protrude no more than 1.5 inches when surface mounted. Sensor shall be capable or recessed mounting without impairing field of view.
9. Wall mount sensor shall have a 117 degree field of view and cover up 1600 square feet when mounted at a height of eight feet.
10. Wall mount sensor shall have three adjustment positions for range control.
11. Subject to compliance with the above requirements, provide models of one of the following:
    a. Hubbell-ATP Series
    b. Sensor Switch-CM/WV Series
    c. Wattstopper-CX Series
    d. Greengate OAC-P/OAWC-P Series
    e. Leviton – OSWWV/IOW Series

C. PASSIVE INFRARED WALL SWITCH: Where units are indicated provide a sensor that meets the following minimum requirements:

© BNA Consulting

1. Sensor shall utilize a dual element pyroelectric detector behind a lens to detect the motion of infrared energy emitted by the human.
2. Lens shall be of the multi-element type that divides the field of view into forty zones of detection.
3. Sensor shall fit a single gang switch box and utilize a decorator cover plate.
4. Sensor shall not protrude more than 0.75 inches from switch box.
5. Sensor shall operate at 120VAC and 277VAC.
6. Sensor shall have a time-out delay, adjustable from 1 minute to 30 minutes.
7. Sensor shall have an Automatic/OFF switch on front of unit.
8. Sensor shall incorporate a daylight control. The adjustable ambient light control shall be adjustable from 20 to 420 foot-candles.
9. Sensor shall have a 170 degree field of view. Detection beam shall be horizontal.
10. Sensor shall use a dry contact relay to control the lighting load.
11. Sensor shall be rated for 0 to 600 watts at 120VAC and 277VAC and adapt automatically to the operating voltage.
12. Subject to compliance with the above requirements, provide models of one of the following:
    a. Hubbell-WS Series
    b. Sensor Switch-WSX Series
    c. Wattstopper-WS Series
    d. Greengate OSW-P Series
    e. Leviton – ODS 10 – ID Series

D. ULTRASONIC (MICROPHONICS) WALL SWITCH: Where units are indicated provide a sensor that meets the following minimum requirements:

1. Sensor shall utilize active ultrasonics to detect motion.
2. Sensor shall have two ultrasonic transmitters and one receiver.
3. Sensor shall incorporate an inrush current limiter circuit to protect the relay contacts.
4. Sensor shall utilize a dry relay contact for control of the lighting load.
5. Sensor shall have a time out adjustment from 8 seconds to 32 minutes. Timer shall be linear and controlled by a timer chip.
6. Sensor shall have automatic sensitivity adjustment and be microprocessor controlled.
7. Sensor shall have automatic gain setback to reduce the sensitivity after the sensor has turned off the lighting to prevent false tripping.
8. Sensor shall have transmitter control adjustments to prevent false tripping from hallway traffic.
9. Sensor shall have a 180 degree field of view, coverage up to 800 square feet, and shall detect six inches of hand movement towards the sensor at a distance of 22 feet. Sensor shall detect body motion towards the sensor at a distance of 32 feet.
10. Sensor shall operate at 120VAC and 277VAC.
11. Sensor shall be rated for 40 to 740 watts at 120VAC and 90 to 1400 watts at 277VAC.
12. Sensor shall be automatic on and shall have an automatic to off override switch on the unit. Switch shall be an air gap switch to disconnect power to the lighting load.
13. Sensor shall have a real time motion indicator on the front of the unit.
14. Sensor shall mount to a single or double gang switch box.

© BNA Consulting

15. Subject to compliance with the above requirements, provide models of one of the following:
    a. Hubbell-ATU 1277 Series
    b. Sensorswitch- WSX PDT Series
    c. Greengate ONW-DT Series
    d. Leviton – OSSMT-MD Series

E. DUAL TECHNOLOGY WALL SWITCH: Where units are indicated provide a sensor that meets the following minimum requirements:

1. Sensor shall utilize PIR (Passive Infrared) to turn on the lights and then PIR or US (Ultrasonic) technologies to keep lights on.
2. Sensor shall incorporate an inrush current limiter circuit to protect the relay contacts.
3. Sensor shall utilize single or dual dry relay contacts for control of the lighting loads. Contractor shall verify requirements in coordination with the drawings.
4. Sensor shall have a self-adjusting time delay, selectable 5, 15 and 30 minutes.
5. Sensor shall have automatic sensitivity adjustment and be microprocessor controlled.
6. Sensor shall have light level sensing 0 to 200 footcandles.
7. Sensor shall have a 180 degree field of view, coverage up to 800 square feet and shall detect 6 inches of hand movement towards the sensor up to 300 square feet; and body motion towards the sensor up to 1000 square feet.
8. Sensor shall be rated for 0 to 800 watts at 120VAC and 0 to 1200 watts at 277VAC.
9. Sensor shall be automatic on and shall have an automatic to off override switch on the unit. Switch shall be equipped with an air gap switch to disconnect power to the lighting load.
10. Sensor shall have real time motion indicator on the front of the unit.
11. Sensor shall mount to a single gang switch box.
12. Subject to compliance with the above requirements. Provide models of one of the following:
    a. Greengate ONW-DT
    b. Sensor Switch WSX PDT Series
    c. Douglas WOS Series

F. DUAL TECHNOLOGY WALL SWITCH WITH DIMMING AND DAY-LIGHT CONTROL: Where units are indicated, provide a sensor that meets the following minimum requirements:

1. Dual technology sensors shall have one of its two technologies, not require motion to detect occupancy.
2. Sensors shall offer a minimum on timer of at least 15 minutes, in order to prevent all cycling of lamps before they have burned for the lamp manufacturers minimum recommended time period.
3. Sensors shall utilize an occupancy time delay that keeps lights on after last detected occupancy. Factory default setting of the occupancy time delay shall be 15 minutes.
4. Manual adjustment to the occupancy time delay so as to increase it shall be accommodated.
5. Sensor shall be capable of switching both 120 VAC and 277 VAC.
6. Sensor shall recess into single gang switch box and fit standard GFI opening.

© BNA Consulting

7. Sensor shall meet NEC grounding requirements by providing a dedicated ground connection and intrinsically grounding through its mounting strap.
8. Line and load wire connections shall be interchangeable.
9. Wall switch sensor shall have field programmable adjustments for selecting operational modes, occupancy time delays, minimum on time, and photocell set-point.
10. Sensor shall be capable of both auto-on and manual operation.
11. Combination photocell/dimming sensors set point and deadband shall be automatically calibrated through the sensors microprocessor by initiating the automatic set point programming procedure. Min and max dim settings as well as set point may be manually entered.
12. Subject to compliance with the above requirements, provide models of one of the following:
    a. Sensor-Switch – WSX-PDT-D Series
    b. Green Gate – CSW-d-010

G. ULTRASONIC (MICROPHONICS) CEILING SENSOR WITH DAYLIGHT CONTROL: Where units are indicated, provide a sensor that meets the following minimum requirements:

1. Sensor shall meet all requirements of Ultrasonic Ceiling Sensors.
2. Sensor shall incorporate a daylight control photocell to control the lighting based on available ambient light and occupancy.
3. Photocell shall be adjustable from 2 to 300 footcandles.
4. Photocell shall have an adjustable dead band control from 10% to 400% to set the difference between lights on level and lights off level.
5. Adjustments shall be accessible on front of sensor.
6. Photocell control shall have a bi-colored LED on front of sensor to aid in adjusting lighting on\off levels.
7. Photocell control shall have an adjustable time delay from 2 seconds to 4 minutes to prevent lights from cycling during temporary interruptions of ambient light.
8. Switching priority shall be given to the occupancy sensor function when the space is vacant to turn the lighting off.
9. Daylight control shall override the sensor when the space is occupied to turn the lighting off if there is sufficient ambient light available and on when ambient light level drops.
10. Daylight control shall not be dependent on the sensor cycling the lighting off before photocell control will operate.
11. Daylight control sensor shall be able to be networked with other sensors.
12. Subject to compliance with the above requirements, provide models of one of the following:
    a. Hubbell-ATU/CRP Series
    b. Sensor Switch CM ADC Series
    c. Wattstopper-DT Series
    d. Leviton – OSC UOW Series
    e. Green Gate – OAC-U Series

H. DUAL TECHNOLOGY CEILING SENSOR: Where units are indicated, provide a sensor that meets the following minimum requirements:

1. Sensor shall incorporate ultrasonic (microphonics) and infrared technologies in a single unit.

© BNA Consulting

2. Sensor shall be Class 2, low voltage; capable of mounting in the ceiling for maximum coverage.
3. Sensor shall use internal microprocessor for motion signal analysis and automatic self-adjustment.
4. Sensor shall have automatic self-adjustment algorithm that adjusts timer and sensitivity settings to maximize performance and minimize energy usage.
5. Sensor shall have manual time-out adjustment from 8 minutes to 32 minutes and automatic time out from 8 minutes to 100 minutes.
6. Sensor shall have test time-out setting of 8 seconds, with automatic return to 8 minutes after one hour if sensor is left in test mode.
7. Sensor's microprocessor shall automatically extend timer by 1 hour in response to recognition to false off condition. After 5 hours, sensor reduces extended time by 30 minutes and continues to reduce by 30 minute increments over the next few days.
8. Sensor's microprocessor shall automatically reduce either PIR or ultrasonic sensitivity in response to false on condition.
9. Sensor microprocessor will automatically monitor PIR background threshold signal level and makes corresponding sensitivity adjustments automatically.
10. Sensor microprocessor algorithm shall incorporate automatic adaptation to continuous airflow.
11. For airflow that is so intense as to mask motion, sensor shall flash indicator LED code to indicate excessive airflow.
12. Sensor's microprocessor shall use a four week learning period and develop a circadian calendar.
13. An internal 24 hour 7 day clock establishes what periods the room is typically occupied, biasing sensor to keep lights on while normally occupied and off when normally unoccupied.
14. Sensor shall have selection settings for the following dual technology schemes:
    a. High Sensitivity and High Confidence (miser mode)
15. Sensor shall be available with either 180 degrees or 360 degrees coverage pattern.
16. Infrared lens shall have 360 degree field of view. Two types of lens shall be available, standard and extra dense.
17. Sensor shall have a variety of mask inserts for PIR coverage rejection to prevent false tripping.
18. Transducers shall be protected from tampering.
19. Sensor shall have manual adjustments for timer and sensitivities and override switches to force manual adjustment mode.
20. Sensor shall have adjustable sensitivity from 0% to 100% for both ultrasonic and infrared.
21. Controls shall be behind cover to resist tampering. All adjustments shall be accessible from the front of the sensor.
22. Sensor shall be available with a photocell adjustment from 20 to 3,000 Lux.
23. Sensor shall provide internal operating status and settings confirmation via LED motion lamp indicator.
24. Sensor shall have two (if 180 degree) or three (if 360 degree) real time LED motion indicators visible from the front of the unit: Red = infrared; green = ultrasonic.
25. Subject to compliance with the above requirements, provide models of one of the following:
    a. Hubbell-ATD Series

© BNA Consulting

b. Sensor Switch-CM-PDT 9/10 Series

c. Wattstopper-DT Series

d. Leviton – OSC UOW Series

e. Greengate OAC– DT Series

f. Douglas – WOR Series

I. PASSIVE INFRARED CEILING SENSOR: Where units are indicated, provide a sensor that meets the following minimum requirements:

1. Sensor shall incorporate infrared sensing technology.
2. Sensor shall be Class 2, low voltage; capable of mounting in the ceiling for maximum coverage.
3. Sensor shall use internal microprocessor for signal analysis and automatic self-adjustment.
4. Sensor shall have automatic self-adjustment algorithm that adjusts timer and sensitivity settings to maximize performance and minimize energy usage.
5. Sensor shall have manual time-out adjustment from 8 minutes to 32 minutes and automatic time-out from 8 minutes to 100 minutes.
6. Sensor shall have test time-out setting of 8 seconds, with automatic return to 8 minutes after one hour if sensor is left in test mode.
7. Sensor microprocessor shall automatically extend timer by 1 hour in response to recognition of false off condition.
8. After 5 hours, sensor reduces extended time by 30 minutes and continues to reduce by 30 minute increments over the next few days.
9. Sensor’s microprocessor will automatically monitor PIR background threshold signal level and makes corresponding sensitivity adjustments automatically.
10. Sensor’s microprocessor shall use a four week learning period and develop a circadian calendar. An internal 24 hour 7 day clock establishes what periods the room is typically occupied, biasing sensor to keep lights on.
11. Sensor shall be available with a 360 degree coverage pattern. Infrared lens shall have 360 degree field of view. Two types of lens shall be available, standard and extra dense.
12. Sensor shall have mask inserts for PIR coverage rejection.
13. Sensor shall have manual adjustments for timer and sensitivities and override switches to force manual adjustment mode.
14. Sensor shall have adjustable sensitivity from 0% to 100% for infrared sensor.
15. Controls shall be behind cover to resist tampering. All adjustments shall be accessible from the front of the sensor.
16. Sensor shall be available with a photocell adjustment from 20 to 3,000 Lux.
17. Sensor shall have one real time LED motion indicator visible from the front of the unit: Red = infrared.
18. Subject to compliance with the above requirements, provide models of one of the following:

    a. Hubbell-ATP Series

    b. Sensor Switch-CM-9/10 Series

    c. Wattstopper-WPIR CX Series

    d. Greengate P Series

    e. Leviton – OSC IOW Series

J. 24 VDC POWER/CONTROL PACK: Where units are indicated, provide a power/control pack that meets the following minimum requirements:

© BNA Consulting

1. Control module shall consist of a DC power supply and a dry contact relay for switching a lighting load.
2. Control module shall be available in versions to accept 120, and 277 VAC line voltages.
3. Output shall be 24VDC nominal, and shall be inherently safe, low voltage, limited power output (Class 2).
4. Output shall supply 100mA current, in addition to current consumed internally to operate internal relay.
5. Relay shall utilize normally open, silver alloy dry contacts, and shall be rated for a 20A ballast load at 120V and 277V.
6. Relay function shall not require more than 5 mA control current to operate.
7. Control module shall have line voltage wiring, consisting of input voltage and relay contact connections, exiting from one end, and low voltage DC connections, consisting of ground, power, and control wires, exiting from the other end.
8. Control module shall be sized to fit inside a standard 4” x 4” junction box.
9. Control module shall be equipped with a 1/2” EMT threaded male fitting on the line voltage end, such that it may be mounted to the outside of a junction box with the line voltage wiring internal to the box and the low voltage wiring external.
10. Control module shall be equipable with accessory 1/2” EMT threaded male fitting on the low voltage end, such that it may be mounted to the inside of a ballast cavity with the box and line voltage wiring internal to the cavity and the low voltage wiring external.
11. Slave module shall be available for switching additional circuits. Slave module has same construction and specifications as control module except without power supply function.
12. Subject to compliance with the above requirements, provide models of one of the following:
    a. Hubbell-CU Series
    b. Sensor Switch-MP20 Series
    c. Wattstopper-BEP Series
    d. Greengate SP20-MV Series
    e. Leviton – OSC/OSA Series
    f. Douglas – WP-PP

PART 3 – EXECUTION

3.1 INSTALLATION OF LIGHTING CONTROL EQUIPMENT:

A. Install occupancy lighting control system components and ancillary equipment as indicated, in accordance with equipment manufacturer's written instructions, and with recognized industry practices, to ensure that lighting control equipment complies with requirements.

B. Comply with requirements of NEC, and applicable portions of NECA's "Standard of Installation" pertaining to general electrical installation practices.

C. Coordinate with other electrical work, including raceways, and electrical boxes and fittings, as necessary to interface installation of lighting control equipment work with other work.

D. Contractor shall be on site as required, to adjust lighting control units for proper operation.

E. Mount the switchpack in a standard 4" junction box. Mount sensor to a standard 4” junction boxes. Refer to manufacturer supplied mounting instructions.

F. Spare Parts: Refer to Section 26 0502 for requirements.

© BNA Consulting

3.2 FIELD QUALITY CONTROL:

A. Upon completion of installation and after circuitry has been energized, demonstrate capability and compliance of system with requirements.

B. System start-up: Provide a factory authorized technician to verify the installation and test the system.

C. Where possible, correct malfunctioning units at site, then retest to demonstrate compliance; otherwise, remove and replace with new units, and proceed with retesting.

D. Contractor shall visit the job site 3 months after the owner has taken occupancy and adjust any units not operating properly, otherwise remove and replace with new units.

3.3 PRODUCT SUPPORT AND SERVICES:

A. System Start-Up: Provide a factory authorized technician to verify the installation, test the system, and train the owner on proper operation and maintenance of the system. Before requesting start-up services, the installing contractor shall verify that:

1. The sensors have been fully installed in accordance with manufacturer's installation instructions.
2. Low voltage wiring for overrides and sensors is completed.
3. Accurate 'as-built' load schedules have been prepared.
4. Proper notification of the impending start-up has been provided to the owner's representative.
5. Programming of all switches, sensors, power packs, relays, etc. shall be completed by factory authorized technician, prior to final and training.

B. Factory support: Factory telephone support shall be available at no cost to the owner during the warranty period. Factory assistance shall consist of assistance in solving programming or other application issues pertaining to the control equipment. The factory shall provide a toll free number for technical support.

C. Functional Testing:

1. The owner shall hire a third party that will conduct and certify the functional testing.

2. Lighting controls devices shall be tested to ensure that control hardware and software are calibrated, adjusted, programmed, and in proper working conditions in accordance with the construction documents, manufacturer's instructions and code requirements. The following shall be performed:

a. Certify that sensors have been located, aimed and calibrated per manufacturer recommendations.
b. Status indicator operates properly.
c. Fixtures that are controlled by auto-on controls turn on to permitted level.
d. Fixtures that are controlled by manual on controls operate when manually activated.
e. Fixtures do not turn on incorrectly due to HVAC or movement outside the controlled area.
f. Confirm that occupancy sensors turn off after space is vacated and do not turn on unless space is occupied.
g. Simulate unoccupied conditions and confirm that vacancy sensors only turn on manually and turn off after space is vacated.

3. The party responsible for the functional testing shall provide documentation that the installed lighting controls meet or exceed all performance criteria and shall not be directly involved in the design or construction of the project.

© BNA Consulting

3.4 WARRANTY:

A. Manufacturer shall provide a one (1) year limited warranty on lighting control system. A ten (10) year limited warranty shall be provided on the lighting control relays.

3.5 RECORD DRAWINGS: Refer to Section 26 0502 for requirements.

3.6 TRAINING

A. Provide four (4) hours of video taped training in two 2 hour sessions on the operation and use of the lighting control equipment, at job site, at no cost to the Owner.

3.7 MANUFACTURER AUTHORIZED PERSONNEL TRAINING:

A. Building Operating Personnel Training: Train Owner's building personnel in procedures for starting-up, testing and operating lighting control system equipment.

END OF SECTION 26 0923

© BNA Consulting

SECTION 26 2416 - PANELBOARDS

PART 1 – GENERAL

1.1 RELATED DOCUMENTS:

A. Drawings and general provisions of Contract, including General and Supplementary Conditions and Division-1 Specification sections, apply to work of this section.

B. This section is a Division-26 Basic Materials and Methods section, and is part of each Division-26 section making reference to panelboards specified herein.

1.2 DESCRIPTION OF WORK:

A. The extent of panelboard and enclosure work, is indicated by drawings and schedules.

B. Types of panelboards and enclosures in this section include lighting and appliance panelboards, and power distribution panelboards.

1.3 QUALITY ASSURANCE:

A. Provide units that have been UL listed and labeled. Comply with NEC as applicable to installation of panelboards, cabinets, and cutout boxes. Comply with NEC pertaining to installation of wiring and equipment in hazardous locations. Comply with NEMA Stds. Pub No. 250, "Enclosures for Electrical Equipment (1000 volt maximum). Pub No. 1, "Instructions for Safe Installation, Operation and Maintenance of Panelboards Rated 600 Volts or Less".

1.4 SUBMITTALS: Refer to Section 26 0502 for requirements.

PART 2 – PRODUCTS

2.1 ACCEPTABLE MANUFACTURERS:

A. Subject to compliance with requirements, provide of one of the following:

1. Cutler Hammer Products, Eaton Corp.
2. GE/ABB
3. Siemens Energy & Automation, Inc.
4. Square D Company

2.2 PANELBOARDS:

A. GENERAL:

1. Except as otherwise indicated, provide panelboards, enclosures and ancillary components, of types, sizes, and ratings indicated. Equip with number of unit panelboard devices as required for complete installation. Fully equip "spaces" with hardware to receive breaker or switch of size indicated. Provide CU/AL rated lugs of proper size to accommodate conductors specified.

B. POWER DISTRIBUTION PANELBOARDS:

1. Provide dead-front safety type power distribution panelboards as indicated, with switching and protective devices in quantities, ratings, types and with arrangement shown. Equip with aluminum bus bars, full-sized neutral bus and ground bus. Provide fusible or circuit breaker branch and main devices as indicated. Series rated systems are not acceptable. See Section 262815, Overcurrent Protection Devices.

© BNA Consulting

C. LIGHTING AND APPLIANCE PANELBOARDS:

1. Provide dead-front safety type lighting and appliance panelboards as indicated, with switching and protective devices in quantities, ratings, types, and arrangement shown. Provide bolt-on thermal magnetic type branch breakers. Where multiple breakers are indicated, provide with common trip handle. Series rated systems are not acceptable. Equip with copper bus bars, full-sized neutral bus, and ground bus.

D. PANELBOARD ENCLOSURES:

1. Provide galvanized sheet steel cabinet type enclosures, in sizes and NEMA types as indicated, code-gage minimum 16-gage thickness. Provide fronts with adjustable indicating trim clamps, and doors with flush locks and keys, all panelboard enclosures keyed alike, with concealed door hinges and door swings as indicated. Equip with interior circuit-directory frame, and card with clear plastic covering. Provide baked gray enamel finish over a rust inhibitor. Provide enclosures fabricated by same manufacturer as overcurrent devices contained therein Bolt engraved plastic laminate labels indicating panel name and voltage on the interior and exterior of panelboards.

E. FINISH:

1. Coat interior and exterior of surface with manufacturer's standard color; baked on enamel finish.

F. ELECTRICAL IDENTIFICATION:

1. Refer to Section 260553 for requirements.

PART 3 – EXECUTION

3.1 INSTALLATION OF PANELBOARDS:

A. GENERAL:

1. Install panelboards and enclosures where indicated, in accordance with manufacturer's written instructions, applicable requirements of NEC and NECA's "Standard of Installation", in compliance with recognized industry practices to ensure products fulfill requirements.

B. MOUNTING:

1. Provide 4" high concrete curb under floor standing distribution panelboards.

2. Coordinate installation of panelboards and enclosures with cable and raceway installation work. Anchor enclosures firmly to walls and structural surfaces, ensuring they are permanently and mechanically secure. Arrange conductors neatly within enclosure, and secure with suitable nylon ties. Fill out panelboard's circuit directory card upon completion of installation work. Utilize actual final building room numbers, not architectural numbers used on drawings. Identify individual lighting circuits and individual receptacle circuits by room served. Label circuit breakers to identify location of subpanel or equipment supplied using room numbers and equipment names. Include room number with equipment circuit designations. All directories to be typewritten.

END OF SECTION 26 2416

© BNA Consulting

SECTION 26 2713 - SERVICE ENTRANCE

PART 1 – GENERAL

1.1 RELATED DOCUMENTS:

A. Drawings and general provisions of Contract, including General and Supplementary Conditions and Division-1 Specification sections, apply to work of this section.

B. Division-26 Basic Materials and Methods sections apply to work specified in this section.

1.2 DESCRIPTION OF WORK:

A. Extent of service-entrance work is indicated by drawings and schedules.

B. Switchboards, panels, disconnects, transformers, etc., used for service-entrance equipment are specified in applicable Division-26 sections, and are included as work of this section.

C. Consult local utility relative to all costs for line extensions, connections, etc., and include all costs for bringing service to the facility in base bid. Confirm location of point of service before bidding.

D. Provide labor and materials as required to accomplish power company metering in accordance with power company standards and requirements.

E. Provide concrete pads of size and type required for service transformers. Verify location, size, openings, reinforcing requirements with local utility before beginning work. Comply with local utility code required clearance requirements.

1.3 QUALITY ASSURANCE:

A. Comply with NEC and NEMA standards as applicable to construction and installation of service-entrance equipment and accessories. Provide service-entrance equipment and accessories that are UL-listed and labeled, and equipment marked, "Suitable for use as Service Equipment".

1.4 SUBMITTALS: Refer to Section 26 0502 for requirements.

A. MAINTENANCE STOCK, FUSES: Refer to Section 26 0502 for requirements.

PART 2 – PRODUCTS

2.1 SERVICE - ENTRANCE EQUIPMENT:

A. GENERAL: Provide service-entrance equipment and accessories, of types, sizes, ratings and electrical characteristics indicated, that comply with manufacturer's standard materials, design and construction in accordance with published product information, and as required for complete installation, and as herein specified.

2.2 OVERCURRENT PROTECTIVE DEVICES:

A. GENERAL: Provide overcurrent protective devices complying with Division-26 section "Overcurrent Protective Devices", and as indicated on drawings.

2.3 METERING:

A. METER SOCKETS: Provide meter sockets that comply with requirements of local utility company supplying electrical power to service-entrance equipment of building project.

B. METERS: Provide meters, current and potential transformers, selector switches, wiring, etc. for a complete metering system. Provide meter of same manufacturer as switchboard (equal to Square D Power Logic Circuit Monitor, Class 3020, Model CM-3250), integrally mounted in service equipment, completely wired with control power input. Provide

© BNA Consulting

capability for metering the following data:

INSTANTANEOUS READINGS	DEMAND READINGS
RMS Current Values	**Current Values**
Phase A Current	Average Demand Current Phase A
Phase B Current	Average Demand Current Phase B
Phase C Current	Average Demand current Phase C
3-Phase Average Current	Peak Demand Current Phase A
Apparent RMS Current	Peak Demand Current Phase B
RMS Voltage Values	Peak Demand Current Phase C
Phase A-B Voltage	Real Power Values
Phase B-C Voltage	Average Demand Real Power
Phase C-A Voltage	Predicted Demand Real Power
Phase A-N Voltage	Peak Demand Real Power
Phase B-N Voltage	Phase C-N Voltage
Power Factor Values	**Energy Readings**
Phase A Power Factor	-
Phase B Power Factor	Energy Accumulated
Phase C Power Factor	Reactive Energy Accumulated
3-Phase Total Power Factor	-
3-Phase Total Power Values	-
Real Power, 3-Phase Total	-
Reactive Power, 3-Phase Total	-
Apparent Power, 3-Phase Total	-
Frequency	-
Temperature	-

C. Provide with integral display, selection keys, and indicting LEDs. For each instantaneous reading, provide a running maximum and minimum history in non-volatile memory, capable of externally operated reset. Provide "waveform capture" feature to allow subsequent analysis of actual current and voltage profile for harmonic distortion.

2.4 RACEWAYS AND CONDUCTORS:

A. GENERAL: Provide raceways and conductors complying with applicable Division-26 Basic Materials and Methods sections.

B. WALL AND FLOOR SEALS: Provide wall and floor seals complying with Division-26 Basic Materials and Methods section "Raceways".

PART 3 – EXECUTION

3.1 INSTALLATION OF SERVICE-ENTRANCE EQUIPMENT:

A. Install service-entrance equipment as indicated, in accordance with manufacturer's written instructions, and with recognized industry practices, to ensure that service-entrance equipment fulfills requirements. Comply with applicable installation requirements of NEC and NEMA standards.

B. Coordinate with other work, including utility company wiring, as necessary to interface installation of service-entrance equipment work with other work.

© BNA Consulting

C. Install all floor standing service equipment on 4" high concrete curb and bolt equipment to curb with 3/8" anchors at each corner and at intervals not to exceed 8' along perimeter. Install concrete wiring trench under floor standing equipment; 12" deep, and 4" smaller in length and width than equipment base. Install grounding bushings on conduits penetrating trench.

3.2 GROUNDING:

A. Provide system and equipment grounding and bonding connections for service-entrance equipment and conductors, as required.

3.3 ADJUST AND CLEAN:

A. Adjust operating mechanisms for free mechanical movement.

B. Touch-up scratched or marred enclosure surfaces to match original finishes.

3.4 FIELD QUALITY CONTROL:

A. Upon completion of installation of service-entrance equipment and electrical circuitry, energize circuitry and demonstrate capability and compliance with requirements. Where possible, correct malfunctioning units at site, then retest to demonstrate compliance; otherwise, remove and replace with new units, and proceed with retesting.

END OF SECTION 26 2713

© BNA Consulting

BLANK PAGE

© BNA Consulting

SECTION 26 2726 - WIRING DEVICES

PART 1 – GENERAL

1.1 RELATED DOCUMENTS

A. Drawings and general provisions of Contract, including General and Supplementary Conditions and Division-1 Specification sections, apply to work of this section.

B. This section is a Division-26 Basic Materials and Methods section, and is part of each Division-26 section making reference to wiring devices specified herein.

1.2 DESCRIPTION OF WORK:

A. The extent of wiring device work is indicated by drawings and schedules. Wiring devices are defined as single discrete units of electrical distribution systems that are intended to carry but not utilize electric energy.

B. Types of electrical wiring devices in this section include the following:

1. Receptacles
2. Switches
3. Dimmer controls
4. Cord caps and Cord connectors

1.3 QUALITY ASSURANCE:

A. Comply with NEC and NEMA standards as applicable to construction and installation of electrical wiring devices. Provide electrical wiring devices that have been UL listed and labeled.

1.4 SUBMITTALS: Refer to Section 26 0502 for requirements.

PART 2 - PRODUCTS

2.1 FABRICATED WIRING DEVICES:

A. GENERAL:

1. Provide factory-fabricated wiring devices, in types, and electrical ratings for applications indicated and complying with NEMA Stds. Pub No. WD 1.

B. Provide wiring devices (of proper voltage rating) as follows:

	RECEPTACLE	SWITCHES			
MFGR		1-POLE	3-WAY	4-WAY	W-PILOT
Hubbell	HBL 5352	HBL 1221	HBL 1223	HBL 1224	HBL 1221-PL
Bryant	5352	1221	1223	1224	1221-PL
Pass Seymour	5352	20AC1	20AC3	20AC4	20AC1-RPL
Leviton	5362	1221	1223	1224	
Cooper	5352	1221	1273	1224	1221-PL

C. Provide devices in colors selected by Architect. Provide red devices on all emergency circuits.

© BNA Consulting

D. GROUND-FAULT INTERRUPTER:

1. Provide general-duty, duplex receptacle, ground-fault circuit interrupters; feed-thru types, capable of protecting connected downstream receptacles on single circuit; grounding type UL-rated Class A, Group A, 20-amperes rating; 120-volts, 60 Hz; with solid-state ground-fault sensing and signaling; with 5 milliamperes ground-fault trip level; color as selected by Architect. Provide Hospital grade where required elsewhere by specification or drawings. Provide units of one of the following:

   a. P&S/Sierra

   b. Hubbell

   c. Leviton

   d. Square D

E. TAMPER RESISTANT RECEPTACLES:

1. Provide tamper resistant receptacles in the following areas; Dwelling units, guest rooms and guest suites, child care facilities, pre-school and elementary education facilities, business offices, corridors, waiting rooms and the like in Clinics, medical/dental offices and outpatient facilities, assembly occupancies and Dormitories.

2. Provide products of one of the following:

   a. Leviton-TWR20-X

   b. Hubbell – BR20XTR

   c. Pass Seymour – TR63X

   d. Cooper – TR5362

F. WEATHER-RESISTANT RECEPTACLES

1. Provide weather-resistant receptacles in outdoor locations such as under roofed open porches, canopies, marquees, etc.

2. Provide products of one of the following:

   a. Pass & Seymour 2095TRWRXXX.

   b. Hubbell GFTR20XX

G. CORD CAPS AND CONNECTORS:

1. Provide 3, 4 and 5-wire grounding, cap plugs, and connectors of ampere and voltage rating required, for final equipment, and as indicated otherwise on drawings.

2. Provide products of one of the following:

   a. Cooper

   b. General Electric

   c. Hubbell

   d. Leviton

   e. P&S

© BNA Consulting

2.2 WIRING DEVICE ACCESSORIES:

A. WALL PLATES:

1. Provide coverplates for wiring devices; plate color to match attached wiring devices. Provide nylon coverplates in all finished areas. Provide galvanized steel plates in unfinished areas. Provide blank coverplates for all empty outlet boxes.

B. WEATHER-PROTECTING DEVICE ENCLOSURES:

1. Where required for compliance with NEC 406-8 (receptacles installed outdoors for use other than with portable tools or equipment), provide weather-tight device covers that provide complete protection with the cord and cap inserted into the wiring device. Provide units that mount on either single or double gang devices.

2. Provide products of one of the following for In Box Vertical or Horizontal for Stucco and Metal Sidings:

a. Arlington Industries

i.	DSBVM1C	Clear Cover
ii.	DSBVM1W	White Cover
iii.	DSBHM1C	Clear Cover
iv.	DSBHM1W	White Cover

PART 3 – EXECUTION

3.1 GENERAL

A. Install wiring devices as indicated, in compliance with manufacturer's written instructions, applicable requirements of NEC and NECA's "Standard of Installation" and in accordance with recognized industry practices to fulfill project requirements.

B. Coordinate with other work, including painting, electrical box and wiring work, as necessary to interface installation of wiring devices with other work. Install devices in boxes such that front of device is flush and square with coverplate. Drawings are small scale and, unless dimensioned, indicate approximate locations only of outlets, devices, equipment, etc. Locate outlets and apparatus symmetrically on floors, walls and ceilings where not dimensioned and coordinate with other work. Verify all dimensioned items on job site. Consult architectural cabinet, millwork, and equipment shop drawings before beginning rough-in of electrical work. Adjust locations of all electrical outlets as required to accommodate work in area, and to avoid conflicts with wainscoat, back splash, tackboards, and other items.

C. Install wiring devices only in electrical boxes that are clean; free from excess building materials, dirt, and debris.

D. Install blank plates on all boxes without devices.

E. Delay installation of wiring devices until wiring work and painting is completed. Provide separate neutral conductor from panel to each GFI receptacle.

F. Install GFI receptacles for all receptacles installed in the following locations:

1. Restrooms, locker rooms, kitchens, within 6 feet of any sink, or when serving vending machines and electric drinking fountains.

2. Indoor wet locations, non-dwelling garages, elevator rooms and pits.

3. Outdoors, and on rooftops.

4. Dwelling unit garages, crawlspaces and unfinished basements, accessory buildings, boathouses, and receptacles for boat hoists.

© BNA Consulting

G. Where light switches or wall box dimmers are specified, provide a separate neutral for each phase of the branch circuits that switches or dimmers are connected.

H. Electrical Identification: Refer to Section 260553 for requirements.

3.2 PROTECTION OF WALL PLATES AND RECEPTACLES:

A. At time of substantial completion, replace those items, that have been damaged, including those stained, burned and scored.

3.3 GROUNDING:

A. Provide electrically continuous, tight grounding connections for wiring devices, unless otherwise indicated.

3.4 TESTING:

A. Prior to energizing circuitry, test wiring devices for electrical continuity and proper polarity connections. After energizing circuitry, test wiring devices to demonstrate compliance with requirements.

END OF SECTION 26 2726

© BNA Consulting

SECTION 26 2815 - OVERCURRENT PROTECTIVE DEVICES

PART 1 – GENERAL

1.1 RELATED DOCUMENTS:

A. Drawings and general provisions of Contract, including General and Supplementary Conditions and Division-1 Specification sections, apply to work of this section.

B. This section is a Division-26 Basic Materials and Methods section, and is part of each Division-26 section making reference to overcurrent protective devices specified herein.

1.2 DESCRIPTION OF WORK:

A. Extent of overcurrent protective device work is indicated by drawings and schedules and specified herein. Overcurrent protective devices specified herein are for installation as individual components in separate enclosures; and for installation as integral components of switchboard and panelboards. See Section 262416, Panelboards.

B. Types of overcurrent protective devices in this section include the following for operation at 600 Volts and below:

1. Molded case thermal circuit breakers
2. Molded case solid-state circuit breakers
3. Fuses

C. Refer to other Division-26 sections for cable/wire and connector work required in conjunction with overcurrent protective devices.

1.3 QUALITY ASSURANCE

A. Comply with NEC requirements and NEMA and ANSI standards as applicable to construction and installation of overcurrent devices.

1.4 SUBMITTALS: Refer to Section 26 0502 for requirements.

PART 2 – PRODUCTS

2.1 ACCEPTABLE MANUFACTURERS:

A. Subject to compliance with requirements, provide products of one of the following (main and branch device manufacturer must be same as panelboard and/or switchboard manufacturer):

B. CIRCUIT BREAKERS:

1. Cutler Hammer Products, Eaton Corp.
2. GE/ABB
3. Square D Co.
4. Siemens Energy and Automation

C. MOLDED CASE THERMAL TRIP CIRCUIT BREAKERS:

1. Provide factory-assembled, molded case circuit breaker for power distribution panelboards and switchboards; and for individual mounting, as indicated. Provide breakers of amperage, voltage, and RMS interrupting rating shown, with permanent thermal trip and adjustable instantaneous magnetic trip in each pole. Series rated systems are not acceptable. Construct with overcenter, trip-free, toggle type operating mechanisms with quick-make, quick-break action and positive handle indication. Construct breakers for mounting and operating in any physical position and in an ambient temperature of 40 degrees C. Provide with

© BNA Consulting

mechanical screw type removable connector lugs, AL/CU rated, of proper size to accommodate conductors specified.

2. Circuit breakers 15 amps through 599 amps shall be molded case thermal trip circuit breakers.

D. MOLDED CASE SOLID-STATE CIRCUIT BREAKERS:

1. Provide factory-assembled, molded case solid-state circuit breakers for power distribution switchgear and switchboards. Provide breakers of amperage, voltage and RMS interrupting rating shown, and with solid-state trip mechanisms. Breakers shall be UL listed for application at 100% of their continuous ampere rating.

2. Circuit breakers 600 amps through 1199 amps shall be molded case solid-state circuit breakers.

3. Solid-state trip mechanisms shall have the following functions: Adjustable long time ampere rating; adjustable long time delay; adjustable short time pick up; adjustable short time delay and adjustable instantaneous pick up.

2.2 FUSES

A. GENERAL: Except as otherwise indicated, provided fuses of type, sizes and ratings and electrical characteristics of a single manufacturer as follows. Provide fuses labeled UL Class L or UL Class R, current limiting and rated for up to 200,000 amperes. Provide Buss KAZ signal activating fuses where required elsewhere in specification.

B. Where fuses are shown feeding individual or groups of equipment items, comply with manufacturer's recommendation for fusing; adjust fuse size and type as necessary to comply with manufacturer's recommendation.

C. Provide and install spare fuse cabinet in main electrical room.

D. MAIN SERVICE AND FEEDER CIRCUITS: For fuse ratings over 600 amperes provide UL Class L Fuses (KRP-C, or A4BQ or LCL or KLPC). For fuse ratings up to 600 amperes, provide UL Class RK1 (KTN-R, KTS-R or A2K-R, A6K-R or NCCR, SCLR or KLN-R, KLS-R). If fuse directly feeds motors, transformers or other inductive load provide UL RK5 time delay (FRN-R, FRS-R or TR-R, TRS-R or ECN-R, ECS-R or FLN-R, FLS-R).

E. BRANCH CIRCUITS: For motor circuits, transformer circuits, or other inductive loads, provide UL Class RK5 (FRN-R, FRS-R or TR-R, TRS-R or ECN-R, ECN-S or FLN-R, FLS-A). For other circuits, provide UL Class RK1, (KTN-R, KTS-R OR A2K-R, A6K-R or NCLR, SCLR OR KLNR, KLSR).

F. MANUFACTURER: Subject to compliance with requirements, provide fuses of one of the following:

1. Bussman Mfg. Co.

2. Mersen (Ferraz Shawmut)

3. Reliance Fuse Div./Brush Fuse Inc.

4. Littlefuse, Inc.

PART 3 – EXECUTION

3.1 INSTALLATION OF OVERCURRENT PROTECTIVE DEVICES:

A. Install overcurrent protective devices as indicated, in accordance with the manufacturer's written instructions and with recognized industry practices to ensure that protective devices comply with requirements. Comply with NEC and NEMA standards for installation of overcurrent protective devices.

B. Coordinate with work as necessary to interface installations of overcurrent protective devices with other work.

© BNA Consulting

C. Install fuses in overcurrent protective devices. For motor circuits, fuse sizes shown on drawings are for general guidance only. Size fuses in accordance with fuse manufacturer's recommendation for given motor nameplate ampere rating. Test operation. If nuisance tripping occurs, increase fuse size and disconnect device (if necessary) as required to provide nuisance free tripping. Adjust fuse size properly for ambient temperature, frequent starting and stopping of motor loads, and for loads with long start times. Include all costs in bid.

D. After the switchgear is energized and just prior to Substantial Completion, the contractor shall ensure that the field-adjustable circuit breakers and solid-state circuit breakers and associated trip mechanisms have been set to the appropriate settings as recommended by the equipment Manufacturer (or as recommended by the electrical contractor's Protective Device Study if section 260573 has been included in the project). Time-current trip curves and trip setting information as was required in the Submittal portion of this specification shall be made available by the contractor at this time.

E. Field test all ground fault protective devices for proper operation; test to be performed by representative of the manufacturer. Include verification of complete time current trip characteristics.

F. Electrical Identification: Refer to Section 260553 for requirements.

3.2 FIELD QUALITY CONTROL

A. Prior to energization of overcurrent protective devices, test devices for continuity of circuitry and for short-circuits. Correct malfunctioning units, and then demonstrate compliance with requirements.

END OF SECTION 26 2815

© BNA Consulting

BLANK PAGE

© BNA Consulting

SECTION 26 2816 - MOTOR AND CIRCUIT DISCONNECTS

PART 1 – GENERAL

1.1 RELATED DOCUMENTS:

A. Drawings and general provisions of Contract, including General and Supplementary Conditions and Division-1 Specification sections, apply to work of this section.

B. This section is a Division-26 Basic Materials and Methods section, and is part of each Division-26 section making reference to motor and circuit disconnect switches specified herein.

1.2 DESCRIPTION OF WORK:

A. Extent of motor and circuit disconnect switch work is indicated by drawings and schedule. Work includes complete installations and electrical connections.

1.3 QUALITY ASSURANCE:

A. Provide motor and circuit disconnect switches that have been UL listed and labeled. Comply with applicable requirements of NEMA Standards Pub. No. KS 1, and NEC.

1.4 SUBMITTALS: Refer to Section 26 0502 for requirements.

PART 2 - PRODUCTS

2.1 ACCEPTABLE MANUFACTURERS:

A. MANUFACTURER: Subject to compliance with requirements, provide products of one of the following (for each type of switch):

1. Cutler Hammer Products, Eaton Corp.
2. Square D Company
3. GE/ABB
4. Siemens Energy & Automation, Inc.

2.2 FABRICATED SWITCHES:

A. GENERAL: Provide disconnect and safety switches as indicated herein. Provide:

1. General duty switches on 240 Volt rated circuits.
2. HP rated switches on all motor circuits.

B. GENERAL DUTY SWITCHES: Provide general-duty type, sheet-steel enclosed switches, fusible or non-fusible as indicated of types, sizes and electrical characteristics indicated; rated 240 volts, 60 hertz; incorporating spring assisted, quick-make, quick-break mechanisms. Provide single phase or three phase and with solid neutral as required by application. Equip with operating handle that is capable of being padlocked in OFF position. Provide NEMA 1 or NEMA 3R as required by application, unless noted. Provide fusible switches with Class R rejection fuse clip kits.

C. FUSES: Provide fuses for switches, as required of classes, types and ratings needed to fulfill electrical requirements for service indicated. See Section 262815 Overcurrent Protective Devices for fuse types. Refer to Section 26 0502 for requirements.

D. Electrical Identification: Refer to Section 260553 for requirements.

© BNA Consulting

PART 3 - EXECUTION

3.1 INSTALLATION OF MOTOR AND CIRCUIT DISCONNECT SWITCHES:

A. Install motor and circuit disconnect switches where indicated, complying with manufacturer's written instructions, applicable requirements of NEC, NEMA, and NECA's "Standard of Installation" and in accordance with recognized industry practices to ensure that products fulfill requirements.

B. Coordinate motor and circuit disconnect switch installation work with electrical raceway and cable work, as necessary for proper interface.

C. Install disconnect switches used with motor driven appliances, and motors and controllers within sight of controller position.

D. For disconnect switches serving motors controlled by variable frequency drives, provide late-make, early-break auxiliary contacts on each disconnect switch. Wire auxiliary contact to VFD safety contact, such that disconnecting the motor will shut down the drive first, and closing the switch will start the drive only after power is applied to the motor.

END OF SECTION 26 2816

© BNA Consulting

SECTION 26 2913 - MOTOR STARTERS

PART 1 – GENERAL

1.1 RELATED DOCUMENTS:

A. Drawings and general provisions of Contract, including General and Supplementary Conditions and Division-1 Specification sections, apply to work of this section.

B. This section is a Division-26 Basic Materials and Methods section, and is part of Division-26 sections making reference to motor starters specified herein.

1.2 DESCRIPTION OF WORK:

A. Extent of motor starter work is indicated by drawings and schedules.

B. Types of motor starters in this section include the following:

1. AC Fraction Horsepower Manual Starters

1.3 QUALITY ASSURANCE:

A. Comply with NEC and NEMA Standards as applicable to wiring methods, construction and installation of motor starters. Comply with applicable requirements of UL 508, "Electric Industrial Control Equipment", pertaining to electrical motor starters. Provide units that have been UL-listed and labeled.

1.4 SUBMITTALS: Refer to Section 26 0502 for requirements.

PART 2 - PRODUCTS

2.1 MANUFACTURER:

A. Subject to compliance with requirements, provide products of one of the following (for each type and rating of motor starter):

1. Allen-Bradley Co.
2. Appleton Electric Co.
3. Crouse-Hinds Co.
4. Eaton Corp., Cutler Hammer Products
5. GE/ABB
6. Siemens Energy & Automation, Inc.
7. Square D Co.

B. MAINTENANCE STOCK, FUSES: Refer to Section 26 0502 for requirements.

2.2 MOTOR STARTERS:

A. GENERAL: Except as otherwise indicated, provide motor starters and ancillary components; of types, sizes, ratings and electrical characteristics indicated that comply with manufacturer's standard materials, design and construction in accordance with published information and as required for complete installations.

B. THERMAL OVERLOAD UNITS: Provide thermal overload units, sized to actual running full load current, not to motor plate current. Size heaters for mechanical equipment after air and water balancing have been completed.

C. AC FRACTIONAL HP MANUAL STARTERS (EQUAL TO SQUARE D CLASS 2510): Provide manual, single-phase, 1 and 2 pole, 300 volt AC max, fractional HP motor starters, of types, ratings and electrical characteristics indicated; equip with one piece thermal

© BNA Consulting

overload relay with field adjustment capability of plus or minus 10 percent of nominal overload heater rating; for protection of AC motors of 1 HP and less. (For manually controlled motors in excess of 1 HP, see Line Voltage Manual Starters specified herein). Provide starter with quick-make, quick-break trip free toggle mechanisms, green pilot lights, and with lock-off toggle operated handle. Mount surface units in NEMA 1 enclosures, unless noted otherwise. Provide NEMA 3R enclosure in exterior or damp location unless noted otherwise. Provide flush mounted units with coverplate to match wiring device coverplates.

PART 3 - EXECUTION

3.1 INSTALLATION OF MOTOR STARTERS:

A. Install motor starters as indicated, in accordance with manufacturer's written instructions, applicable requirements of NEC, NEMA standards, and NECA's "Standards of Installation", and in compliance with recognized industry practices to ensure that products fulfill requirements.

B. Install fuses in fusible disconnects, if any. Mount chart inside each starter indicating heater type, size, and ampere ratings available.

C. Electrical Identification: Refer to Section 260553 for requirements.

3.2 ADJUST AND CLEAN:

A. Inspect operating mechanisms for malfunctioning and, where necessary, adjust units for free mechanical movement.

B. Touch-up scratched or marred surfaces to match original finish.

3.3 FIELD QUALITY CONTROL:

A. Subsequent to wire/cable hook-up, energize motor starters and demonstrate functioning of equipment in accordance with requirements.

END OF SECTION 26 2913

© BNA Consulting

SECTION 26 5100 - INTERIOR AND EXTERIOR BUILDING LIGHTING

PART 1 – GENERAL

1.1 RELATED DOCUMENTS:

A. Drawings and general provisions of Contract, including General and Supplementary Conditions and Division-1 Specification sections, apply to work of this section.

B. Division-26 Basic Materials and Methods sections apply to work specified in this section.

1.2 DESCRIPTION OF WORK:

A. Types of lighting fixtures in this section are indicated by schedule and include the following:

1. LED (Light Emitting Diode)

1.3 QUALITY ASSURANCE:

A. Comply with NEC, NEMA and ANSI 132,1 as applicable to installation and construction of lighting fixtures. Provide lighting fixtures that have been UL-listed and labeled.

B. Components and fixtures shall be listed and approved for the intended use by a National Recognized Testing Laboratory (NRTL) including: UL, ETL, and CSA or equivalent

C. All led products shall comply with the latest version of Illuminating Engineer Society (IES) publications LM-79 and LM-80.

D. All fixtures shall be approved and listed on at least one of these 3 Qualified Fixture Lists; Energy Star, Design Lighting Consortium (DLC), or Lighting Design Lab.

1.4 SUBMITTALS: Refer to Section 26 0502 for requirements.

PART 2 – PRODUCTS

2.1 ACCEPTABLE MANUFACTURERS:

A. Subject to compliance with requirements, provide products of one of the following (for each type of fixture):

1. LED:

a. Cree

b. Nichia

c. Samsung

d. Philips Lumiled

e. Osram

f. Xicato

2.2 INTERIOR AND EXTERIOR LIGHTING FIXTURES:

A. GENERAL:

1. Provide lighting fixtures, of sizes, types and ratings indicated complete with, but not necessarily limited to, housings, lamps, lamp holders, reflectors, ballasts, LED drivers, starters, and wiring. Label each fixture with manufacturer's name and catalog number. Provide all enclosed fixtures with positive latch mechanisms; spring tension clips not acceptable. Provide all exterior fixtures with damp or wet location label as required by application.

© BNA Consulting

B. SUPPORT REQUIREMENTS:

1. Provide all pendant and stem hung fixtures with flexible ball joint hangers at all points of support. Equip hooks used to hang fixtures with safety latches. Provide all detachable fixture parts, luminous ceiling accessories, louvers, diffusers, lenses, and reflectors with locking catches, screws, safety chain, or safety cable.

C. LIGHT EMITTING DIODE (LED) LUMINAIRES:

1. LED luminaires that can be serviced in place shall have a disconnecting means internal to the luminaries to disconnect simultaneously from the source of supply all conductors of the driver, including the grounded conductor. Disconnects shall not be required under the following exceptions:

a. Luminaries located in hazardous locations.

b. Luminaries used for egress lighting.

c. Cord-and-plug luminaries.

d. In industrial establishments with restricted public access where conditions of maintenance and supervision ensure that only qualified persons service the installation.

e. Where more than one luminaire is installed in a space and where disconnecting the supply conductors to the luminaire will not leave the space in total darkness.

f. Provide LED luminaires which are tested in accordance with IES LM-79, diodes tested in accordance with IES LM-80, and provide a minimum R9 rating of ≥ 50 (unless specified differently), a CRI rating of ≥ than 80 and L70 (6K) = 50,000 hours (IES TM-21). Provide with 0-10V dimming drivers as standard.

g. The fixture manufacturer(s) shall warrant the luminaires, in their entirety, to be free from defects in material or workmanship for at least 5 years from date of manufacture. Provide warranty in accordance with other sections of this specification and <u>include a certificate of warranty from the fixture manufacturer with extended warranty information and proper forms and procedure description.</u>

D. DIFFUSERS:

1. Where plastic diffusers are specified, provide 100 percent virgin acrylic compound; minimum thickness, .125 inches.

PART 3 - EXECUTION

3.1 INSTALLATION OF LIGHTING FIXTURES

A. Install lighting fixtures at locations and heights as indicated, in accordance with fixture manufacturer's written instructions, applicable requirements of NEC, NECA's "Standards of Installation", NEMA standards, and with recognized industry practices to ensure that lighting fixtures fulfill requirements.

B. Coordinate with other work as appropriate to properly interface installation of lighting fixtures with other work. Consult architectural reflected ceiling plan for exact location of all lighting fixtures.

C. Provide all necessary supports, brackets, and miscellaneous equipment for mounting of fixtures. Support all ceiling mounted fixtures from the building structure; independent of the ceiling system, unless noted. Support each recessed fixture (fluorescent incandescent,

© BNA Consulting

and/or HID) from the building structure with #12 ga. steel wire attached to each corner (in addition to supports normally provided for attachment to the ceiling system). Provide backing supports above (or behind) sheetrock, plaster and similar ceiling and wall materials. Support surface mounted ceiling fixtures from channel. Support ceiling mounted outlet boxes independent of the raceway system, and capable of supporting 200 pounds. Feed each recessed fixture directly from an outlet box with flex conduit as required; do not loop from fixture to fixture. See plans for additional details.

D. FIXTURE WHIPS:

1. With-in spaces utilizing 0-10v control schemes ie: Room Controllers, the fixture whip shall be comprised of a MC-PCS Cable (see Section 26 0532 Conduit raceways) with at least 36” and not to exceed 72” in length located above removable grid ceilings.

E. Coordinate lighting in mechanical room with duct and equipment locations to avoid obstruction of illumination.

F. Provide gypsum board protection as required, (acceptable to fire official having jurisdiction) to ensure fire rating of each ceiling that the fixtures are installed in.

G. COORDINATION MEETINGS:

1. Meet at least twice with the ceiling installer. Hold first meeting before submittal of shop drawings to coordinate each light fixture mounting condition with ceiling type. During second meeting, coordinate fixture layout in each area.

2. Meet at least once with the mechanical installer prior to fabrication and installation of duct work. Coordinate depth and location of all fixtures and duct work in all areas.

H. ADJUST AND CLEAN:

1. Clean lighting fixtures of dirt and debris upon completion of installation.

2. Protect installed fixtures from damage during remainder of construction period. Repair all nicks and scratches to appearance of original finish.

I. SPARE PARTS: Refer to Section 26 0502 for requirements.

3.2 FIELD QUALITY CONTROL:

A. Upon completion of installation of lighting fixtures, and after building circuitry has been energized, apply electrical energy to demonstrate capability and compliance with requirements.

B. Where possible, correct malfunctioning units at site, then retest to demonstrate compliance; otherwise remove and replace with new units, and proceed with retesting.

C. At the time of Substantial Completion, replace lamps in interior lighting fixtures that are observed to be noticeably dimmed after the Contractor's use and testing, as judged by Architect/Engineer.

D. GROUNDING:

1. Provide equipment grounding connections for each lighting fixture.

END OF SECTION 26 5100

© BNA Consulting

BLANK PAGE

© BNA Consulting

SECTION 27 1500 - TELEPHONE/DATA SYSTEMS

PART 1 – GENERAL

1.1 SCOPE OF DOCUMENT:

A. The following are project specifications that all cabling systems must adhere to. These specifications apply to all installers (hereinafter referred to as “the Contractor”) for all sites, that require, standards-compliant structured cabling systems and shall be used for all the installation, testing, and acceptance of the information transport systems as described in the attached specifications. Prices quoted of the installation facilities shall be all-inclusive and represent a complete installation at such sites as prescribed in this specification and contract documents. The Contractor shall be solely responsible for all parts, labor, testing, acceptance and all other associated processes and physical apparatus necessary to turn-over a completed system fully warranted and operational for acceptance by the Customer. Final acceptance of the installation shall be in writing by the Architect and Engineer.

B. In all instances where Standards are cited, it is assumed Installer will have familiarity with and implicitly follow the recommendations of the most current version of the Standard referenced at the time of installation. Compliance with most current Standards is the sole responsibility of the Contractor.

1.2 RELATED DOCUMENTS:

A. Drawings and general provisions of Contract, including General and Supplementary Conditions and Division-1 Specification sections, apply to work of this section.

B. Division-7 Firestopping, apply to work of this section.

C. Division-26 Basic Materials and Methods sections apply to work specified in this section.

1.3 SCOPE OF WORK:

A. The extent of telephone/data system work is indicated by drawings and is hereby defined to include, but not be limited to racks, cabinets, patch panels, cables, raceway, outlet boxes, device plates, backboard, and grounding. Contractor is responsible for installation of all specified and unspecified necessary and miscellaneous items required for delivery of a complete and functional data cabling and device system.

B. Contractor shall provide complete cable and outlet system as indicated on the drawings and described herein. Work shall include all associated infrastructure transmission components and support appliances including, but not be limited to cable, jacks, terminal blocks, racks, cabinets, wire management, labeling, transient voltage surge suppression, patch cords, telecommunications grounding system and all terminations as specified herein.

C. Contractor shall provide system testing as described herein using up-to-date and industry accepted Level IIIe, IV, V test equipment appropriate to the types of links being tested and in accordance with the latest edition of IEC 61935-1. All testers used shall be factory calibrated within one year of use with references set daily prior to testing.

D. All active equipment (electronics) will be owner furnished and owner installed.

E. Contractor shall be solely responsible for all parts, labor, testing, documentation and all other associated processes and physical apparatus necessary to turn-over the completed system fully warranted and operational for acceptance by Owner and Engineer.

F. Contractor shall provide all labor, materials, tools and equipment required for the complete installation of work called for in the Construction Documents.

G. Copper solution must match optical fiber solution and be provided by the same manufacturer. No two separate warranties are acceptable for the copper connectivity and optical fiber connectivity.

© BNA Consulting

H. Contractor shall provide 1-1” NMT conduit from telecommunications outlet/connector to accessible ceiling space, then utilize non-continuous cable support devices to EF/ER/TR/TE.

1.4 CONTRACTOR QUALIFICATIONS

A. The contractor shall be fully conversant and capable in the cabling of low voltage applications such as, but not limited to voice and data network systems. The Contractor shall at a minimum possess the following qualifications:

1. Must have at a minimum (1) RCDD certified individual employed full time at the time of bidding and throughout entire project. **PROVIDE PROOF OF RCDD CERTIFICATION IMMEDIATELY UPON JOB AWARD**.
2. Approved and certified by connectivity manufacturer. Provide proof of certification immediately upon job award.
3. BICSI Certified Installers or equivalent.
4. Possess those licenses/permits required to perform telecommunications installations in the specified jurisdiction.
5. Have a minimum of 5 years in the communications structured cabling business and be able to provide three owner references for the type of installation described in this specification for projects within the last 18 months.
6. Personnel trained and certified in fiber optic cabling, splicing, termination and testing techniques. Personnel must own not rent a light meter or fiber test adapter head, and OTDR and shall be factory certified by the manufacturer of the products being installed.
7. Personnel trained in the installation of pathways and support for housing horizontal and backbone cabling.
8. Personnel knowledgeable in local, state, province and national codes, and regulations. All work shall comply with the latest revision of the codes or regulations. When conflict exists between local or national codes or regulations, the most stringent codes or regulations shall be followed.
9. Be factory certified by the manufacturer used in installation of all transmission components of all copper and fiber links and able to provide the manufacturer warranty.

1.5 APPLICABLE CODES AND STANDARDS

A. Contractor is responsible for compliance with all applicable portions of the NEC code as to type of products used and installation of components. All materials used shall be products and materials that have been UL-listed and labeled. All installed products shall comply with applicable NEMA standards for low loss extended frequency cable.

B. In addition, installation shall adhere to the following Standards:

1. ANSI/TIA-568-C.0 - Generic Telecommunications Cabling for Customer Premises, or most recent edition at the time of installation
2. ANSI/TIA-568-C.1 – Commercial Building Telecommunications Cabling Standards, or most recent edition at the time of installation
3. ANSI/TIA-568-C.2 - Balance Twisted Pair Communications and Components Standards, or most recent edition at the time of installation
4. ANSI/TIA –942 -Telecommunications Infrastructure for Data Centers, or most recent edition at the time of installation
5. TIA-569-B - Commercial Building Standard for Telecom Pathways and Spaces, or most recent edition at the time of installation

© BNA Consulting

6. ANSI/TIA-606-A – Administration Standard for the Telecommunications Infrastructure of Commercial Buildings, or most recent edition at the time of installation

7. ANSI/NECA/BICSI-607 - Commercial Building Grounding/Bonding Requirements, or most recent edition at the time of installation

8. ANSI/TIA 1152 – Testing of Copper Links

9. BICSI Telecommunications Distribution Methods Manual, 13th edition or most recent edition at the time of installation.

10. TIA 758-A - Customer owned Outside Plant Telecommunications Infrastructure Standard (2004), including all applicable addenda and the most recent revision at the time of installation.

11. BICSI Information Transport Systems Installation Manual - 5th edition or most recent edition at the time of installation.

12. ANSI/NFPA-70 - 2017 National Electrical Code, revision, or most recent revision at the time of installation.

13. ANSI/IEEE C-2 - 2017 National Electrical Safety Code or most recent revision at the time of installation.

14. OSHA Standards and Regulations All applicable

15. Local Codes and Standards All applicable

C. Note: Anywhere cabling standards conflict with electrical or safety codes, Contractor shall defer to NEC and any applicable local codes or ordinances, or default to the most stringent requirements listed by either. Knowledge and execution of applicable codes is the sole responsibility of the Installer. Any code violations shall be remedied at the Contractor's expense.

1.6 ACCEPTABLE MANUFACTURERS:

A. General:

1. Unapproved product substitutions are not allowed. Contractor wishing to substitute any products for those expressly specified shall submit three samples of the alternate product to Engineer no less than two weeks prior to the last addendum accompanied by all engineering documents, drawings and third party test data proving mechanical and transmission equivalency. Acceptance of substitutions shall be received from Engineer in writing. All unapproved substitutions installed shall be removed by Contractor who shall assume all costs for removal and replacement with approved products. Such costs shall include, but not be limited to labor, materials, as well as any penalties or fees for late completion.

B. APPROVED MANUFACTURERS:

1. Contractor shall select only one line item in the each section of Parts 2, 3, and 4. Contractor shall NOT utilize multiple line items for the project within each Part. For example, if Panduit / General Cable is selected to be used for the project, all copper cabling and connectivity shall be by Panduit or General Cable. No other manufacturer or combination of manufacturers may be used for the copper cabling or connectivity equipment.

2. Copper Cabling / Connectivity Approved Manufacturers:

a. CommScope

b. Panduit/General Cable

c. Leviton / Berk-Tek

d. Siemon

© BNA Consulting

e. Belden/ Mohawk

3. Fiber Cabling Approved Manufacturers

a. Same manufacturer from Part 2.

b. Corning

4. Non-Cabling / Connectivity Approved Manufacturers:

a. Same manufacturer from Part 2.

b. Chatsworth

1.7 SUBMITTALS: Refer to Section 26 0502 for requirements.

PART 2 - PRODUCTS

2.1 GENERAL:

A. All products shall be in new condition and UL listed.

B. Provide complete raceway, outlet boxes and miscellaneous items. All conduit utilized shall be EMT grade.

C. Provide 5” x 2.875" (or 4-11/16” x 3.25” square) deep square outlet box at each outlet location with single gang plaster or tile ring. Provide wall board adapters / accessories as necessary.

1. Approved solutions:

a. RANDL 5 Square Telecommunications Outlet Box Model TX-550-YY where “X” could be a bracket box and “YY” could be knockout arrangements.

b. Hubbell Large Capacity Wall Box Model HBL260. If a 2” knockout is required for installation purposes, provide this box.

D. Communication grounding and bonding shall be constructed and installed to meet or exceed the requirements of the National Electrical Code (NEC), IEC 1000-5-2 and ANSI/J-STD--607-A throughout the entire grounding system.

E. All termination hardware shall be rated to meet specified cabling specifications.

2.2 ENTRANCE FACILITY (EF) / EQUIPMENT ROOM (ER) / TELECOMMUNICATIONS ROOM (TR)

A. General:

1. Contractor shall be responsible for the adequate and appropriate design of all racking systems, paying particular attention to sizing of all cable management troughs and supports both horizontal and vertical installation of patch panels and wire management into rack.

B. Provide the following, see specifications for each item in this document:

1. Wall Linings in each EF, ER, and TR:

a. In addition to the architectural walls, provide plywood wall lining that mounts at 8” A.F.F that shall:

i. Be fire-rated or treated on all sides with at least two coats of fire-resistant light-colored paint. Fire-retardant plywood is also acceptable. Leave fire rated stamp on plywood unpainted.

ii. Have walls lined with A/C grade or better, void-free plywood, 8 feet high with a minimum thickness of ¾”. See plans for additional wall locations.

© BNA Consulting

iii. Install the plywood with grade A surface exposed. Plywood shall be securely fastened to wall-framing members to ensure that it can support attached equipment.

iv. Use flush hardware and supports to mount plywood.

v. Plywood shall be void free and kiln-dried to a maximum moisture content of 15 percent to avoid warping.

2. Main Cross Connect (MC) / Horizontal Cross Connects (HC):

a. Wall Mounted Bracket (See Plans for Locations)

i. Provide a minimum 8RU wall mount bracket with shelf, black cabinet, with hinged body

b. Flat Copper Patch Panels:

i. Provide flush mount flat patch panels of required number and size to accommodate shown telecommunications outlets on plans. (No horizontal cable managers are required)

ii. Size panels to provide minimum 25% spare capacity. Fill all available space in remaining patch panels so that panels are fully populated.

iii. Support Category 6 or higher applications.

iv. Shall accommodate 8-Pin 8-Contact (8P8C) ports.

v. Mount to standard wall mount bracket.

c. Fiber Shelves and Cassettes

i. Provide fiber shelves and cassettes as required to complete project with a maximum of 36 strands in 1RU.

ii. Provide rack mounted, fiber trays as required to complete project.

iii. Provide OM4 fiber adapter patch panels that contain modular, dual LC adapter panels as required to complete project. Color for OM4 ports to be aqua, color for OS2 ports to be yellow.

iv. Provide minimum 25% spare capacity of fiber adapter panels. Provide additional rack mounted fiber trays/fiber adapter patch panels if necessary to meet 25% spare capacity requirement.

e. Uninterruptible Power Supply (UPS)

i. Provide 1500VA, 120V rack-mounted UPS for each rack/cabinet on project with capability of providing backup to the full connected load for a minimum of 10 minutes, regardless of shown load on electrical panel schedules.

ii. Provide a minimum of (2) output receptacles.

iii. Provide submittal for each UPS showing run time graph that shows compliance with the specifications.

iv. Approved Manufacturers

1. APC
2. Eaton

2.3 CABLING DISTRIBUTION SYSTEMS AND MISCELLANEOUS EQUIPMENT

A. General:

© BNA Consulting

1. Provide plenum rated cable/connectors if required, cabling/connectors must be appropriate for the environment that it is installed in. Provide wet rated cable for all wet locations, including any conduit in or below slab on grade.

2. Contractor shall be responsible for sizing all pathways such that newly installed cable represents not more than a 35% fill as per manufacturer's directions. Overfilled pathways are the sole responsibility of the Contractor who shall remove and reinstall at Contractors expense.

3. Provide products rated for the environment that it is installed in (i.e. riser, plenum, outdoor). All cabling installed in wet locations (i.e. underground conduit, conduit in slab on grade) shall be listed for use in wet locations.

B. Backbone Cabling Distribution System – Optical Fiber

1. General:

a. Provide an optical fiber backbone cabling distribution system between telecommunication spaces. Provide OFNR or OFNP as required. Provide 900µm tight-buffered optical fiber cable for premise cable and loose tube for outside plant cable.

b. Provide fiber jumpers of appropriate length and cable type for each terminated optical fiber port to be connected.

2. Multi-Mode Fiber Optic Cable (OM3)

a. All multimode optical fiber cabling shall be 50µm/125µm micron laser-optimized cable, designation OM3.

b. Provide two strands between each EF/ER, ER/TR, and TR/TE for each 48-port patch panel. Provide a minimum of 6-strands of fiber between telecom rooms unless otherwise noted on plans. Provide 25% extra fiber pair strands if more than 6-strands are required. See riser diagram for additional information.

3. Connectors:

a. Provide LC-Duplex Connectors.

b. Mechanical connectors are acceptable. Do not utilize polish type connectors. Clean all preterm connectors, no exceptions.

C. Horizontal Cabling Distribution System – Balanced Twisted Pair

1. General:

a. Provide appropriate number of Category 6 horizontal cables, patch cables, work area cables, for all terminated data drops, between switches, etc. so that building-wide networking will be operational once all installation is complete.

2. Horizontal Cabling

a. Provide Cat 6 UTP, min-compliant, 4-Pair 100Ω Balanced Twisted Pair Cable to all locations shown on plans.

b. Provide cabling rated for the environment that it is installed in (i.e underground conduit, conduit in slab on grade). All cabling installed in wet locations shall be listed for use in wet locations.

c. Provide a minimum of (2) cables, unless otherwise noted, to each location shown on plans.

d. Horizontal cable shall be blue.

f. Field Terminable Plug (FTP)

© BNA Consulting

i. Provide an FTP for each camera and WAP. Provide one FTP for each camera and two FTPs for each WAP. Confirm FTPs are compatible with WAPs and Cameras.

3. Patch and Work Area Cables:

a. Provide and install (1) 7-foot-long patch cable for each workstation and (1) 3-5 foot patch cable for each patch panel port in the TR/TC.

b. No patch or work area cords shall in any case exceed in total 10 meters as per TIA Standard unless design includes Standards compliant MUTOA (multi-user termination outlet) and work area cord adjustments are made according to recommendations for zone cabling contained within TIA 568-C or most recent revision at the time of installation. Coordinate with owner for preferred patch cord lengths at patch panel and work area.

c. Copper patch cord and work area outlet cabling must be provided by the same manufacturer and meet the same performance standards as the horizontal cabling.

d. Patch cord and work area cables shall be blue.

e. Provide (1) 5 foot, 2-strand optical fiber patch cable for each patch panel, utilizing same performance standards and connector types as specified for the backbone. The cable shall be provided by the same manufacturer and meets the same performance standards as the backbone optical fiber.

4. Telecommunications Outlets/Connectors (See Plans for Locations):

a. Flat Faceplates:

i. Provide modular type information outlets with flat telephone jack or data outlet. Provide single gang faceplate kits to allow up to six data or voice jacks as shown on plans. Provide faceplate kits for wall outlets in colors and materials that match power wiring device plates. Provide faceplate kits that allow labeling schemes described herein. Faceplates shall accept STP, UTP, fiber optic or audio/video modules as an option.

ii. Blank off all unused ports.

iii. Color: Standard color as selected by owner/architect.

b. Angled Connector:

i. Color: Standard color as selected by owner/architect.

PART 3 – EXECUTION

3.1 GENERAL

A. Prior to pathway rough-in, low voltage contractor shall meet with electrical contractor to review pathway installation requirements.

B. Pathway Requirements:

1. General:

a. All pathways shall be designed, constructed, grounded and installed in accordance with all recommendations delineated within TIA 569-B and Standard TIA 942.

b. Prior to placing any cable pathways or cable, the contractor shall survey the site to determine job conditions will not impose any obstructions that would interfere with the safe and satisfactory placement of the cables. Field coordinate alternate pathway requirements with other trades onsite. New pathways shall not exceed distance limitations defined within this

© BNA Consulting

specification. Notify the Engineer of the changes for final approval prior to proceeding with the change.

c. Paint all electrical boxes and their covers for the telephone and data system green (Kwal Paint Java Green AC098N).

2. Conduits:

a. Conduit runs shall not have continuous sections longer than 100 feet without a pull box and may only be filled to 35% capacity.

b. Telecommunications conduits should not be routed over or adjacent to heat sources such as boilers, hot water lines, or steam lines. Neither should they be routed near large motors, generators, photocopy equipment, or electrical power cabling and transformers.

3. Open Top Cable Support Requirements:

a. Provide wide surface area open-top cable supports spaced 5 feet apart at the maximum to adequately support and distribute cable's weight. Follow manufacturer specifications for cable loading. Provide supports that have a galvanized finish with wide base specifically for telecommunications cabling.

b. Non-continuous cable supports shall provide a bearing surface of sufficient width to comply with required bend radii of high-performance cables

c. Non-continuous cable supports shall have flared edges to prevent damage while installing cables.

d. Multi-tiered non-continuous cable support assemblies shall be used where separate cabling compartments are required. Assemblies shall consist of a steel angled hanger bracket holding up to six non-continuous cable supports.

e. Approved Equipment

i. <u>Erico Caddy-Cat HP</u>

4. Pull Box Requirements:

a. NEC sized pull boxes are not acceptable. Follow BICSI and EIA/TIA 569-B guidelines for pull box sizing.

b. Provide pull boxes in sections of conduit that are 100 feet or longer, contain more than two 90-degree bends, or contain a reverse bend.

c. Conduits that enter the pull box from opposite ends should be aligned.

d. Pull boxes shall have a length 12 times the diameter of the largest conduit.

e. All pull boxes must be accessible.

C. Cabling System:

1. Follow T568B scheme for copper cabling terminations.

2. Life Safety Related Cabling:

a. Provide the specified category cabling in 1" conduit from elevators and or lifts. Cabling shall terminate at telephone service demarcation point. .

b. Provide the specified category cabling in 1" conduit for two phone lines to the fire alarm control panel back to telephone service demarcation point.

c. Provide the specified category cabling in 1" conduit for the two-way communication system Main Control Panel back to telephone service demarcation point.

3. Miscellaneous Related Cabling:

© BNA Consulting

a. Provide the specified category cabling in 1” conduit for two data connections to Intrusion Detection System head-end back to EF or demarcation room. Refer plans for exact locations.

b. Provide the specified category cabling in 1” conduit for two data connections to Access Controls System head-end back to closest data rack. Refer to plans for exact locations.

c. Provide the specified category cabling in 1” conduit for one data connection to Intercom head-end back to closest data rack. Refer to plans for exact locations. Provide specified category cabling and conduit between intercom head-end and access control panel.

d. Provide the specified category cabling in 1” conduit for Main Building Management System (ATC Panels, etc) back to nearest ER/TR room. Refer to Mechanical plans for exact location.

e. Provide the specified category cabling in 1” conduit for Advanced Energy & Power Metering System back to Main Building Management System Panel. Refer to plans for main switchboard location.

4. Backbone cables shall be installed separately from horizontal distribution cables. Provide plenum rated innerduct if required, innerduct must be appropriate for the environment that it is installed in.

5. It is acceptable to install innerduct within cable tray as long as the fill ratio is not exceeded.

6. Fiber slack shall be neatly coiled within the fiber enclosure or cable tray. No slack loops shall be allowed external to the fiber panel. Each cable shall be individually attached to the respective fiber enclosure by mechanical means.

7. Provide a minimum of one balanced twisted pair cable to each voice outlet and one balanced twisted pair cable to each data outlet shown on the drawings unless noted otherwise on the drawings.

8. Service Loop Requirements

a. Provide a minimum 6” service loop in each communications system junction box for balanced twisted pair. Cables shall be coiled in the in-wall boxes if adequate space is present to house the cable coil without exceeding manufacturers bend radius.

b. Provide a minimum 10’ service loop in each EF/ER/TR/TE.

c. Provide a minimum 2’ service loop at each stub-up or at each transition from conduit to cable tray.

d. Provide a 5’ service loop in the ceiling before the conduit travels down the wall and terminates into the communications junction box.

e. Provide a 25’ loop at all wireless access point (WAP) locations above the ceiling.

9. Provide modular jacks for each installed cable at outlets shown on drawings. Blank off all unused ports on faceplate.

10. Provide Velcro type ties for all cables and install in a neat and workmanlike manner. Where applicable, use plenum rated Velcro. Where cable is installed in cable tray, bundle a maximum of 25 cables in each Velcro tie. No zip ties are permitted whatsoever, even for temporarily hanging cables during the installation process

11. The bending radius and pulling strength requirements of all backbone and horizontal cables shall be observed during handling and after installation. Use pulling compound as recommended by manufacturer.

© BNA Consulting

12. All horizontal cables, regardless of media type, shall not exceed 90 m (295 ft) from the telecommunications outlets in the work area to the horizontal cross connect.

13. The combined length of all patch cords in the EF/ER/TR and the work area shall not exceed 10m (33 ft)

14. No splices are allowed.

15. In a false ceiling environment, a minimum of 3 inches shall be observed between cable supports and false ceiling. At no point shall cable(s) rest on acoustic ceiling grids or panels.

16. Cable shall be installed above fire-sprinkler systems and shall not be attached to the system or any ancillary equipment or hardware. The cable system and support hardware shall be installed so that it does not obscure any valves, fire alarm conduit, boxes, or other control devices.

17. Cables shall not be attached to ceiling grid seismic support wires or lighting fixture seismic support wires. Where support for horizontal cable is required, the contractor shall install appropriate carriers to support the cabling.

18. Any cable damaged or exceeding recommended installation parameters during installation shall be replaced by the contractor prior to final acceptance at no cost to the Owner.

19. Pulling tension for balanced twisted pair shall not exceed 25lbf and for optical fiber shall not exceed 50lbf.

20. Pair untwist at the termination shall not exceed 0.125”. The cable jacket shall be maintained as close as possible to the termination point.

21. Cables shall be neatly bundled and dressed to their respective panels or blocks. Each panel or block shall be fed by an individual bundle separated and dressed back to the point of cable entrance into the rack or frame.

22. Cable shall not be draped on, tied or otherwise secured to electrical conduit, plumbing, ventilation ductwork or any other equipment. Cable shall be secured to building supports or hangers or to additional blocks or anchors specifically installed for this purpose.

23. Copper Backbone Terminations:

    a. Terminate one single pair on pins 4, 5 at each patch panel port. Terminate all pairs on patch panel located on rack.

D. Grounding System:

1. All grounding and bonding shall be done according to ANSI J-STD-607-A, TIA 942, and NEC.

2. All cabinets/racks shall utilize paint piercing grounding washers, to be used where rack sections bolt together, on both sides, under the head of the bolt and between the nut and rack.

3. All racks shall further utilize a full-length rack ground strip attached to the rear of the side rail with the thread-forming screws provided to ensure metal-to-metal contact. Similar to Panduit RGS.

4. All active equipment from owner shall be bonded to ground. If the equipment manufacturer provides a location for mounting a grounding connection, that connection shall be utilized. All active equipment shall be bonded using the appropriate jumper for the equipment being installed using the thread-forming screws. Similar to Panduit RG.

5. Racks shall have individual, appropriately sized conductors bonded to the grounding backbone. Do not bond racks or cabinets serially – daisy-chained rack grounds will not be accepted.

© BNA Consulting

6. Patch panels shall be bonded to racks using the appropriate bonding screws. Mounting rails may utilize cage nuts, threaded holes or thru hole mounting fasteners to secure patch panels to the rails.

7. Bond cable tray, raceway system, structural steel and all other metal equipment located within EF/ER/TR to the grounding bus bar utilizing copper conductors per the following schedule:

   a. ≤25’ - #34

   b. ≤50’ - #2

   c. ≤66’ - #2/0

   d. ≥67’ - #3/0

8. Provide 4” X 12” X ¼” CU Telecommunication Main Grounding Bus Bar (TMGB) with bonding conductor per schedule above to Intersystem Bonding Terminal (IBT) in each telecommunication room (EF/ER/TR) with a main cross-connect (MC). Provide 20% spare termination spaces on bus bar, provide additional bus bars as necessary to accommodate spare.

9. Provide 2” X 12” X ¼” CU Telecommunication Grounding Bus Bar (TGB) with bonding conductor per schedule above to TMGB in each room with a horizontal cross-connect (HC).

10. Refer to electrical diagrams for additional ground connection requirements.

E. Electromagnetic Compatibility:

1. General:

   a. Do not install power feeders above or within the telecommunications room. Do not install telecommunications conduits above electrical panelboards, switchboards, transformers, motor control centers, etc.

   b. Where telecommunication cable is installed in grounded, metallic conduit near power cables, the power cables shall be kept physically separated from telecommunications cables:

      i. Circuits Under 5kVA: 2” minimum separation.

      ii. Circuits Over 5kVA: 6” minimum separation.

      iii. Electrical motors/transformers: 48” minimum separation.

      iv. Lighting ballasts: 6” minimum separation.

   c. Where telecommunication cable is installed in cable tray or underground in non-metallic conduit near power cables, the power cables shall be kept physically separated from telecommunications cables by a minimum of 12”

F. Firestopping and Smoke/Acoustical Pathways(See Also Division 7):

1. Provide firestop/smoke barrier solution equivalent to the wall/ceiling/floor rating.

2. Provide firestop labels next to each penetration with written date. Label both sides of the penetration.

3. Firestop systems shall be UL Classified to ASTM E814 (UL 1479). A drawing showing the proposed firestop system shall be provided to the Engineer prior to installing the Firestop system(s).

4. Utilize firestop pass-through type devices for medium to large penetrations into fire walls/floors.

5. Provide a minimum of (4) 4” trade size Hilti Speedsleeves (or STI EZPath) with at least one spare for each and every firewall penetration where cable tray meets the wall.

© BNA Consulting

6. Provide the following products:

   a. Fire Rated; STI EZ-Path Fire-Rated Pathways Series (or Hilti Speed Sleeve CP 653 BA)

   b. Smoke/Acoustical Rated; STI EZ-Path Smoke & Acoustical Pathway Series (or Hilti Smoke and Acoustic Sleeve CS-SL SA)

G. Miscellaneous Equipment:

1. Arrange all terminal blocks in a manner that allows natural wiring progression and minimizes crossing of wires.

2. Provide patch cords and cross connect cables as necessary for a complete operational telephone and data network system. Consult with owner to determine any special needs such as dedicated phone lines.

PART 4 – LABELING

4.1 GENERAL

A. The contractor shall develop and submit for approval a labeling system for the cable installation. The Owner will negotiate an appropriate labeling scheme with the successful contractor. At a minimum, the labeling system shall clearly identify all components of the system: racks, cables, panels and outlets. The labeling system shall designate the cables origin and destination and a unique identifier for the cable within the system. Racks and patch panels shall be labeled to identify the location within the cable system infrastructure. All labeling information shall be recorded on the as-built drawings and all test documents shall reflect the appropriate labeling scheme.

B. All telecommunications spaces, pathways, cables, connecting hardware, equipment, racks, patch panels, outlet/connectors, and grounding system shall be labeled in accordance with TIA/EIA 606-A.

C. All labels shall meet UL 969 requirements for legibility, defacement and adhesion requirements. Handwritten, Ink, or Laser Printing labels are not allowed. Provide labels using thermal transfer print. Heat shrinking or wraparound labels are required, flag style labels are not allowed.

4.2 TELECOMMUNICATION PATHWAYS

A. Identify each dedicated pathway (including inner ducts) for the voice and data system.

B. Label pathways at regular intervals and wherever they are accessible.

4.3 TELECOMMUNICATION CABLES

A. Identify cables at each end with a permanent label or physical/electronic tag.

1. The same alphanumeric identifiers should be used at both ends of the cable.

2. Identify cables at regular intervals throughout and wherever they are accessible.

3. Cables shall be identified in accordance with the System Documentation Section of this specification and ANSI/TIA/EIA-606-A. The cable label shall be applied to the cable behind the faceplate that can be accessed by removing the cover plate and to the cable behind the patch panel on a section of cable that can be viewed without removing the bundle support ties. Cables labeled within the bundle where the label is obscured from view shall not be acceptable.

4.4 CONNECTING HARDWARE

A. Identify connecting hardware items (termination blocks, cross-connects, racks, cabinets, patch panels, telecommunications outlet/connectors, ports) using alphanumeric identification such as the following three-level scheme:

© BNA Consulting

1. First level—Termination field or patch panel. Color-coding or other labeling should be used to uniquely identify each termination field (e.g., voice and data) on a common mechanical assembly.
2. Second level—Terminal block within a given field or patch panel that could be a row of insulation displacement connectors (IDCs), optical fiber connectors, or modular jacks.
3. Third level—Defines the individual position within a given terminal block or patch panel.

4.5 TELECOMMUNICATIONS GROUNDING SYSTEM

A. Identify each telecommunications grounding bus bar (TGB) and telecommunications main grounding bus bar (TMGB).

B. Identify each grounding conductor relating to the telecommunications system, including those connecting building steel, grounding electrodes, water pipes, and telecommunications structural components.

PART 5 - MISCELLANEOUS

5.1 TESTING:

A. General

1. Provide testing within 10 days of completion for all copper and fiber optic cable according to TIA/EIA standards and any other requirements of the manufacturer who will provide warranty.
2. Submit copy of current calibration of all testing equipment. Submit all test reports electronically to architect/engineer and include in O&M manuals to include test reports. Meter shall have been calibrated within the past 12 months.
3. Correct any malfunctions. Contractor shall re-terminate/replace any cable, connection, or equipment found to be defective or non-compliant with these specifications and referenced standards.
4. Invite Owner IT representative and Engineer to witness and/or review field testing. Notify five business days prior to commencing testing.

B. Copper Cable

1. Utilize Level IIIe, IV, V Tester to test all equipment and each outlet, horizontal cable, termination block, patch cords, etc. to verify compliance with requirements. Testing shall consist of industry accepted verification tests for the Category of cable installed and shall meet latest requirements of EIA/TIA cabling Standards.
2. UTP Cable and Links: All UTP cabling channel must be tested at swept frequencies up to 250MHz for internal channel performance parameters as defined in IEEE 802.3an and ANSI/TIA/EIA-568C. Certifications shall include the following parameters for each pair of each cable installed:
   a. Wire map (pin to pin connectivity)
   b. Length
   c. Insertion Loss
   d. Near End Crosstalk (NEXT)
   e. Attenuation to Crosstalk Ratio Far End (ACRF)
   f. Return Loss
   g. Propagation Delay
   h. Delay Skew

© BNA Consulting

i. DC Loop Resistance

j. DC Resistance Unbalance

k. Power Sum Near-End Crosstalk (PS-NEXT)

l. Attenuation to Crosstalk Ratio Near-End (ACR-N)

m. Power Sum Attenuation to Crosstalk Ratio Near-End (PS-ACR-N)

n. Attenuation to Crosstalk Ratio Far-End (ACR-F)

o. Power Sum Attenuation to Crosstalk Ratio Far-End (PS-ACR-F)

p. Transverse Conversion Loss (TCL)

q. Equal Level Transverse Conversion Transfer Loss (ELTCTL)

3. All channels that fail testing parameters will be replaced at the Contractor's expense until all channels pass the performance parameters.

4. Provide Modular Plug Terminated Link (MPTL) test for all field terminated plugs (standard for cameras and WAPs).

a. All installed cabling modular plug terminated links (MPTL) shall comply with the permanent link transmission requirements of the ANSI/TIA-568-2.D standard.

b. The MPTL shall be tested with a Permanent Link Adapter on the Main Unit and a Patch Cord Adapter Suitable for Category 6A testing on the Far End or Remote Test Equipment.

c. Modular plug terminated link test results, including the individual frequency measurements from the tester, shall be recorded in the test instrument upon completion of each test for subsequent uploading for reports to be generated.

5. Sampling is not acceptable. MPTL testing shall be performed on each cabling segment (connector to connector).

C. Fiber Optic Cable

1. Provide test results using an OTDR of all installed fiber optic links to demonstrate compliance with requirements. Testing shall consist of industry accepted verification tests for the type of cable installed and shall meet the latest requirements of EIA/TIA 455-53A standards. Test setup and performance shall be conducted in accordance with ANSI/TIA/EIA 526-14 Standard Method B.

2. Provide inspection of fiber end faces by using scope and test according to IEC 61300-3-35 standards. Correct scratched, pitted, or dirty connectors.

3. Provide bi-directional testing of cable for both cable rated wavelengths. Results shall show compliance of cable and shall include the following parameters:

a. Attenuation

b. Length

c. Verification of Polarity

D. Owner reserves the right to hire an independent testing company to spot check the test results. If the results vary more than 10% from the results provided by the Contractor, the Contractor will be required to prove his results are correct or retest the entire system.

5.2 WARRANTY:

A. Register installation with cable/connectivity manufacturer.

B. Provide and submit all test results to owner, engineer, and manufacturer and meet all other manufacturer requirements in order to provide minimum 20-year extended product link

© BNA Consulting

warranty for complete cabling/connectivity installation, including all copper and optical fiber utilized on the entire channel. The channel warranty shall be provided by the connectivity manufacturer. Include replacement material and installation for any defective product.

5.3 OPERATING AND MAINTENANCE MANUALS: Refer to Section 26 0502 for requirements.

5.4 TRAINING:

A. Provide four hours training on the operation and installation of the structured cabling system at job site, at no cost to owner.

5.5 RECORD DRAWINGS: Refer to Section 26 0502 for requirements.

END OF SECTION 27 1500

© BNA Consulting

BLANK PAGE

© BNA Consulting

SECTION 28 1601 - SECURITY SYSTEMS (RACEWAYS)

PART 1 – GENERAL

1.1 RELATED DOCUMENTS:

A. Drawings and general provisions of Contract, including General and Supplementary Conditions and Division-1 Specification sections, apply to work of this section.

B. Division-26 Basic Materials and Methods sections apply to work specified in this section.

1.2 DESCRIPTION OF WORK

A. Extent of security system work is indicated by drawings and is hereby defined to include, but not be limited to raceway, outlets, coverplates, backboards, cabinets, grounding and miscellaneous items required for complete raceway system.

B. Refer to other Division-26 sections for requirements for raceways, trays, boxes and fittings, and supporting devices, and other sections, as applicable.

1.3 QUALITY ASSURANCE:

A. Comply with applicable portions of NEC as to type products used and installation of components. Provide products and materials that have been UL-listed and labeled.

PART 2 – PRODUCTS

A. GENERAL: Provide complete raceway system for security system including but not limited to, raceway, outlets, coverplates, backboards, cabinets, grounding and miscellaneous items as required.

B. Provide plywood terminal backboards, 4' x 8'x 3/4" unless noted otherwise.

C. Provide terminal cabinets of code gauge steel, flush or surface, as indicated, with concealed trim clamps, concealed hinges and flush lock, with gray baked enamel finish to match finish of panelboard covers. Construct back boxes of code gauge galvanized steel with removable endwalls.

PART 3 - EXECUTION

3.1 INSTALLATION OF SECURITY RACEWAY SYSTEM:

A. GENERAL: Install raceway system as indicated to comply with NEC and recognized industry practices. Run 3/4" conduit in a loop from each security device to terminal backboard, tray, or terminal cabinet. Provide nylon pull cord in all installed raceway.

B. GROUNDING: Provide one #6 bare copper ground from each security system terminal board to the service entrance ground. Enclose in suitable raceway for entire length. Coil six feet of conductor at each terminal board. Make connection at service entrance ground. See drawings for additional requirements.

C. POWER: Provide a minimum of one duplex receptacle on dedicated emergency powered circuit adjacent to each terminal backboard or cabinet. See drawings for additional power outlets.

END OF SECTION 28 1601

© BNA Consulting

BLANK PAGE

© BNA Consulting

SECTION 28 3111 - FIRE ALARM AND DETECTION SYSTEM

PART 1 - GENERAL

1.1 RELATED DOCUMENTS:

A. Drawings and general provisions of Contract, including General and Supplementary Conditions and Division-1 Specification sections, apply to work of this section.

B. Division-26 Basic Materials and Methods sections apply to work specified in this section.

1.2 DESCRIPTION OF WORK:

A. Expand existing fire alarm and detection system. Extent of fire alarm and detection systems work is indicated by drawings, schedules and as specified herein.

B. Comply with NEC as applicable to construction and installation of fire alarm and detection system components and accessories. Provide components and systems that are UL-listed and labeled for fire alarm. Provide fire alarm and detection systems and accessories that are FM approved. Comply with State and local requirements as applicable.

C. Comply with applicable provisions of current NFPA Standards 72, National Fire Alarm Code, local building codes, and meet requirements of local authorities having jurisdiction.

D. Carefully review all Division 23 drawings for all fire/smoke dampers. Fire/smoke dampers are NOT shown on electrical plans. Electrical contractor is responsible for coordinating 120V power to all dampers and providing fire alarm connections to each one. See mechanical drawings for all locations.

1.3 SUBMITTALS: Refer to Section 26 0502 for requirements.

PART 2 - PRODUCTS

2.1 ACCEPTABLE MANUFACTURERS:

A. MANUFACTURER: Subject to compliance with requirements, provide fire alarm and detection systems of one of the following:

1. Fire-Lite (match existing equipment)

a. The Shelter Building and Hope housing Building have separate fire alarm control panels but they are both Fire-Lite systems.

B. The job foreman or lead technician shall be factory trained and certified on the system being installed. Individual shall have a minimum NICET II certification.

2.2 FIRE ALARM AND DETECTION SYSTEMS:

A. GENERAL: Expand existing electrically operated, electrically supervised fire alarm system as described herein. Include control units, power supplies, alarm initiating and indicating devices, conduit, wire, fittings and accessories required to provide a complete operating system. Enclose entire system in raceway. Provide basic wiring materials that comply with Division 26, Basic Materials and Methods Sections for raceways, conductors, boxes, fittings, supports, etc. Minimum wire size to be #14 AWG copper.

B. SYSTEM TYPE: Analog addressable, non-coded. Either manual activation of a fire alarm station or activation of an automatic initiating device energizes all fire alarm signaling devices, sounding a non-coded alarm and providing device identification on an annunciator panel.

C. SYSTEM OPERATION: Provide system such that any manual station or automatic initiating device annunciates all alarm indicating units (bells, horns, buzzers, chimes, visual alarm lamps, etc.) continuously until the manual station or initiating device is restored to normal and the fire alarm control unit reset. Annunciate alarm signals by device at the

© BNA Consulting

control panel and all remote annunciators. Provide all conductors, raceway, equipment and labor to accomplish the following:

D. Selectively activate and/or deactivate fan units as required.

E. Provide supervised circuits for the following:

1. Close dampers upon activation of an alarm from any device through the HVAC interface relays at the Fire Command Center.

F. Central Station Monitoring. Provide a UL listed fire control communicator in accordance with NFPA 71 with a minimum of two reporting zones to the central station. Provide a communicator with dual phone lines for central station reporting by using BFSK or pulsed single round fast format. Provide integral trouble annunciator. Provide with compatibility for automatic test reports every 24 hours. Provide system and components that comply with UL 2635 and UL 864.

G. Expand existing fire alarm control panel with capability of shutting down individual initiating devices for maintenance purposes without affecting the continued operation of other initiating devices.

H. Provide manual fire alarm stations in boiler rooms, and main administrative office. Provide external alarm horns sufficient to be heard in all parking areas.

I. Provide relays, monitor modules and connections as required at control panel of kitchen hood suppression system for initiation of alarm signal to fire alarm control panel. Connect hood suppression control panel to shunt trip breakers as required.

2.3 SCOPE OF THE WORK:

A. Expand existing addressable fire alarm system.

B. Provide all fire alarm devices.

C. Provide duct smoke detectors and fan relays at all fan units 2000 CFM and over. Shut down all supply and return fans upon a general alarm signal.

D. Provide a fire alarm duct detector within 5-feet of any fire/smoke damper as required to comply with IMC 607.5.4.1. The duct detector shall be listed for the air velocity, temperature and humidity at the point where it is to be installed. A duct detector will not be required at a fire/smoke damper located on a corridor wall where the corridor has smoke detection devices installed. For dampers installed within an un-ducted opening in a wall, a spot-type detector listed for releasing service shall be installed within 5-feet horizontally of the damper. Provide a fire alarm relay at each fire/smoke damper. Provide a test switch at each location where the damper is located above an inaccessible ceiling or is located more than 10 feet above the finished floor. Coordinate the location of test switches with owner/architect.

E. All initiating devices connected to the fire alarm control panel shall be analog addressable.

F. All wiring may be “free-aired” as long as the wiring is fire rated and has a “red” jacket color.

G. Provide Carbon Monoxide Detectors in the first room downstream from a fuel burning Roof Top Unit and in spaces that have fuel burning appliances, ie: Kitchen Equipment, dryers, Boilers, water heaters, Kilns Etc.

2.4 REMOTE OPERATING PANEL:

A. Provide a new annunciator panel for the Shelter Building as the existing fire alarm control panel has been relocated to a storage room.

B. Remote Operating Panel (Provide color as selected by Architect)

C. The Remote Operating Panel shall contain 80 digit alphanumeric display providing status of all devices including the fire alarm control panel.

D. The Remote Operating Panel shall permit the user to perform all necessary functions

© BNA Consulting

including but not limited to the following:

1. Alarm/Trouble Acknowledge
2. Alarm Silence
3. Reset
4. Lamp Test
5. Control of Initiating Devices (on/off)
6. Control of Output Modules (on/off)
7. Change sensitivity of devices
8. Change time
9. Walk test
10. Check System on battery voltage and current

2.5 MONITOR MODULE:

A. Remote identification module devices shall be attached to any single normally open initiating device (heat detector, waterflow switch, duct detectors, sprinkler, tamper switches, kitchen hood, pull station, etc.). The modules shall supply addressing and status information to the Fire Alarm Control Panel through the dual loop module.

2.6 CONTROL POINT MODULE:

A. The control point module shall be connected to the same loop as the initiating devices, and shall provide a relay output (Form "C" 2 Amp @ 24 VDC, resistive only).

B. This relay output shall be used to perform auxiliary functions.

C. When the AOM is activated, the red "ACTIVE" LED shall be on solid. Under normal conditions, the red "ON LINE" LED shall flash.

2.7 MANUAL FIRE ALARM STATION:

A. Provide red enclosure, manual fire alarm stations with the following features:

1. Aluminum construction, for flush mounting.
2. Addressable alarm type electrically compatible with system requirements.
3. Double Action
4. Dual-Action design requiring unit to be opened for resetting, and requiring resetting before closing. Key reset, keyed like fire control panel.

2.8 IONIZATION SMOKE DETECTORS:

A. All ionization smoke detectors shall be capable of being replaced without disconnecting any wires or wire connectors from the base of the detector. Each detector shall be installed on a separate base. The detector base shall be capable of receiving a photoelectric, ionization, or electronic thermal detector. All ionization fire detectors shall be UL 268 listed. All detectors shall have (2) viewable LEDs to indicate the status of the device.

2.9 PHOTOELECTRIC DETECTORS:

A. All photoelectric detectors shall be capable of being replaced without disconnecting any wires or wire connectors from the base of the detector. Each detector shall be installed on a separate base. The detector base shall be capable of receiving a photoelectric, ionization, or electronic thermal detector. All photoelectric detectors shall be UL 268 listed. All detectors shall have (2) viewable LEDs to indicate the status of the device.

2.10 DUCT FIRE DETECTORS:

A. Provide ionization type with UL 268A listings. Each detector shall be equipped with a

© BNA Consulting

remote light. Each detector shall have (2) form "c" alarm contacts rated at 10 amps (at 120VAC).

2.11 CARBON MONOXIDE:

A. Provide a combination smoke/CO detector as shown on drawings. Provide detectors with the following features:

1. Compliance with UL2075.
2. Trouble relay.
3. Wiring supervision with SEMS Terminals.
4. A six year end-of-life timer.
5. Sounder base for sound audible alarm.

2.12 THERMAL DETECTORS:

A. Thermal detectors shall operate on the Rate-of-Rise principal. The detectors shall have a fixed temperature rating of 135 degrees Fahrenheit. Exception: in Boiler rooms, provide temperature rating of 200 degrees Fahrenheit.

1. The heat detector shall consist of a base and a head.
2. The base shall be capable of accepting either a smoke detector or a 135 (or 200) degree heat detector.
3. The head shall automatically restore to its normal standby condition when the temperature returns to its normal range.

2.13 AUDIOVISUAL ALARM HORNS:

A. Provide audio-visual alarm horns with the following features:

1. Die cast or stamped steel construction, finished in red/white (color by Architect) enamel, suitable for indoor or outdoor application.
2. Capable of 90 db (UL rating) sound level at 10 feet.
3. Flush mounted
4. Integrally mounted flashing light unit, with Lexan lens with block letters “FIRE”, and minimum flash rate of ONE per second, and 110 candela minimum.
5. Electrically compatible with system requirements.
6. Horns shall sound the temporal pattern (code 3) until silenced.
7. Audiovisual alarm horns shall have the ability to silence horns while maintaining the strobe flash, until reset.
8. Mechanical horn mechanism only, electronic horns are not acceptable.
9. Maximum 24 horns per circuit, maximum 8 strobes per circuit.

B. Strobes shall be synchronized when there are three or more within sight and less than 55 feet of viewer.

2.14 STROBES:

A. Provide strobe with flashing light unit, with Lexan lens with block letters “FIRE”, and minimum flash rate of ONE per second, and high intensity 110 candela minimum. Strobes shall be synchronized when there are three or more within sight and less than 55 feet of viewer. Furnish in Red/White (color by Architect).

2.15 CEILING MOUNT STROBES:

A. Provide strobe UL listed for ceiling mounting, flush mounted in ceiling or concrete vaulted ceiling. Provide strobe with flashing light unit, with Lexan lens with block letters “FIRE”, and minimum flash rate of ONE per second, and 110 candela minimum.

B. Strobes shall be synchronized when there are three or more within sight and less than 55

© BNA Consulting

feet of viewer.

C. Furnish in Red/White (color by Architect).

2.16 AUDIO/VISUAL LOW FREQUENCY HORNS:

A. Provide audio-visual low frequency horns with the following features:

1. Unit shall be flush mounted to back box using a universal mounting plate.
2. Integrally mounted flashing light unit, with Lexan lens with block letters “FIRE”, and a minimum flash rate of one per second.
3. Sounder shall sound the temporal pattern (code 3) until silenced and operate at a frequency range of 520 Hz ± 10%.
4. Electrically compatible with system requirements.
5. Furnish in Red/White (color by Architect).

B. Strobes shall be synchronized when there are three or more within sight.

2.17 AUXILIARY RELAY:

A. Remote auxiliary relay boards shall be rated at 10 AMPS @ 120 VAC. A red LED shall light to indicate relay activation. All relays shall transfer on general alarm and latch on until reset. All relays shall be supervised. The control output provided can be used in conjunction with fire alarm applications (i.e. fan controls, dampers, doors, and any other general alarm control).

2.18 INITIATING MODULES:

A. Provide style "6" initiating modules capable of receiving and annunciating an alarm from any detector, even with a single fault condition on any initiating circuit.

B. Power all smoke detectors from the "Style 6" initiating loop wiring. For systems that power smoke detectors separately from the "Style 6" loop, provide monitoring for both the power source and the independent initiating wiring, so that complete trouble and alarm indication is achieved by loop. Provide capability to operate all smoke detectors, even with a single fault condition on the smoke detector power wiring. Provide one spare initiating circuit.

2.19 SIGNALING MODULES:

A. Provide signaling as required. Provide power adequate to sound all signaling devices concurrently. Provide supervised indicating circuits for polarized 24V D.C. alarm signaling devices. Provide 2 spare signaling circuits.

B. Each signal circuit shall have a separate disconnect switch for servicing the fire alarm system. Each and every indicating circuit shall have a distinct location description. Power supply shall be at fire alarm control panel. Remote power supplies and indicating circuits will not be acceptable.

2.20 SUPPLEMENTAL NOTIFICATION CIRCUITS:

A. Provide supplementary notification appliance circuit panel(s) as required. The ‘SNAC’ shall be capable of supplying up to four, Class A, Style Z notification appliance circuits. The panel shall contain its own battery charger, regulated power supply, and shall be supervised for ground fault, overcurrent, open circuits and low battery conditions. Ground fault, battery and circuit trouble conditions shall transmit a trouble signal to the main fire alarm control panel.

2.21 SYSTEM CONFIGURATION PROGRAMMING:

A. To help the owner in programming, system changes, and servicing, the fire alarm system shall have the following functions.

© BNA Consulting

1. The FACP shall be capable of an auto-configuration, that via a password, all analog devices and panel modules are automatically programmed into the system. At this point the system will operate as a general alarm system without any other programming.
2. If any two devices are addressed the same, the LED's on both devices will light steady and the panel will read "extra address and the address number".
3. If any device is installed and not programmed into the system the LED will light steady and the panel will read the same as above.

2.22 BATTERIES/POWER SUPPLIES:

A. Replace existing standby batteries so that the system is capable of operating fire alarm system for minimum of 24 hours, then operating all indicating units for at least five minutes. Locate batteries in fire alarm control unit, or in similar type enclosure located as directed. Provide all interconnecting wiring. Place batteries that vent hydrogen gas in separate enclosure. Provide 30 percent spare capacity.

PART 3 - EXECUTION

3.1 GENERAL REQUIREMENTS:

A. Approved Plans: A copy of the approved and stamped plans shall be on site during the installation and at the time of inspection to verify that the system is installed according to the approved plans.

B. Install fire alarm and detection systems as indicated, in accordance with equipment manufacturer's written instructions and complying with applicable portions of NEC and NECA's "standard of installation".

C. Install wiring, raceways, and electrical boxes and fittings in accordance with Division 26 Basic Materials and Methods section, "Raceways", "Wires and Cables", and "Electrical Boxes and Fittings", and in accordance with other sections, as applicable.

D. All wire used on the fire alarm system shall be U.L. Listed as fire alarm protective signaling circuit cable per NEC, Article 760.

E. If twisted or shielded wire is required or recommended by the manufacturer it must be used.

F. Review proper installation procedure for each type of device with equipment supplier before installation.

G. Provide a minimum of one 3/4" conduit with (2) Cat 5e telephone cables from FACP to main telephone terminal.

H. Where smoke or heat detectors are specified, install device a minimum of three feet from adjacent air supply diffusers to ensure proper operation of device.

I. Refer to NFPA for spacing and exact placement of fire alarm devices.

J. Electrical Identification: Refer to Section 260553 for requirements.

PART 4 - FINAL ACCEPTANCE AND GUARANTEE

4.1 GUARANTEE:

A. Furnish a three-year guarantee for all equipment, materials and installation, including all labor, transportation, and equipment.

B. Emergency Response. The fire alarm equipment supplier shall provide an emergency response within four hours of any reported system failure to resolve the problem on a continuous basis.

© BNA Consulting

4.2 PRE-TEST:

A. The contractor shall with a representative of the manufacturer conduct a test 3 days before the final test to verify operation of all devices. Any problems must be corrected before the final test.

4.3 FINAL TEST:

A. Before the installation shall be considered completed and acceptable, a test on the system shall be performed as follows:

1. The contractor's job foreman, a representative of the manufacturer, a representative of the owner, shall operate every building fire alarm device to ensure proper operation and correct annunciation at the control panel. Fan shutdown and door holder circuits shall operate.
2. Conduct a full 24 hour test of battery operation. System shall be put on the batteries for a full 24 hours and all notification appliances shall be operational for a period of 5 minutes.

The supervisory circuitry of the initiating and indicating circuits shall also be verified.

4.4 SPARE PARTS: Refer to Section 26 0502 for requirements.

PART 5 - AS BUILT DRAWINGS AND OPERATION AND MAINTENANCE MANUALS:

5.1 LABELING:

A. All devices shall be labeled with their appropriate address. The labels shall be 18 point pressure sensitive labels.

B. All initiating devices shall be programmed to include the device address and a complete user text English location description, i.e. Device L4S76, Smoke Detector, 1st floor Rm.17

5.2 RECORD DRAWINGS: Refer to Section 26 0502 for requirements.

5.3 OPERATING AND MAINTENANCE MANUALS: Refer to Section 26 0502 for requirements.

5.4 TRAINING:

A. Provide four (4) hours training on the operation and installation of fire alarm system, at job site, at no cost to owner. Provide programming training and software sub-licensing in owner's name. Sub-licensing agreement shall include the U.L. requirement to allow the owner to do any programming that the supplier is allowed to do during commissioning, testing, service and field additions or deletions to the fire alarm system. The fire alarm supplier shall provide this training and licensing at no cost to the owner, including transportation, lodging, meals, and training manuals.

END OF SECTION 28 3111

© BNA Consulting

BLANK PAGE

© BNA Consulting

SECTION 31 1000

SITE CLEARING

PART 1 - GENERAL

1.1 RELATED DOCUMENTS

A. Drawings and general provisions of the Contract, including General and Supplementary Conditions and Division 1 Specification Sections, apply to this Section.

1.2 SUMMARY

A. This Section includes the following:
1. Removing trees and other vegetation.
2. Clearing and grubbing.
3. Topsoil stripping.
4. Removing above-grade site improvements.
5. Disconnecting, capping or sealing, and removing site utilities.

B. Related Sections include the following:
1. Division 1 Section "Temporary Facilities and Controls" for temporary utilities, temporary construction and support facilities, temporary security and protection facilities, and environmental protection measures during site operations.
2. Division 31 Section "Earthwork" for soil materials, excavating, backfilling, and site grading.

1.3 DEFINITIONS

A. Topsoil: Natural or cultivated surface-soil layer containing organic matter and sand, silt, and clay particles; friable, pervious, and black or a darker shade of brown, gray, or red than underlying subsoil; reasonably free of subsoil, clay lumps, gravel, and other objects more than 2 inches (50 mm) in diameter; and free of weeds, roots, and other deleterious materials.

1.4 MATERIALS OWNERSHIP

A. Materials indicated to be stockpiled or to remain are the Owner's property. Cleared materials shall become Contractor's property and shall be removed from the site.

1.5 SUBMITTALS

A. Photographs, DVD or videotape, sufficiently detailed, of existing conditions of trees and plantings, adjoining construction, and site improvements that might be misconstrued as damage caused by site clearing.

B. Record drawings according to Division 1 Section "Closeout Procedures."
1. Identify and accurately locate capped utilities and other subsurface structural, electrical, and mechanical conditions.

1.6 QUALITY ASSURANCE

A. Pre-installation Conference: Conduct conference at Project site to comply with requirements in Division 1 Section "Project Meetings."

1.7 PROJECT CONDITIONS

A. Traffic: Minimize interference with adjoining roads, streets, walks, and other adjacent occupied or used facilities during site-clearing operations.
   1. Do not close or obstruct streets, walks, or other adjacent occupied or used facilities without permission from Owner and authorities having jurisdiction.
   2. Provide alternate routes around closed or obstructed traffic ways if required by Owner or authorities having jurisdiction.

B. Improvements on Adjoining Property: Authority for performing indicated removal and/or access on property adjoining Owner's property will be obtained by Owner before award of Contract.

C. Salvable Improvements: Carefully remove items indicated to be salvaged and store on Owner's premises where indicated.

D. Notification: Notify utility locator service for area where Project is located before site clearing.

PART 2 - PRODUCTS (NOT APPLICABLE)

PART 3 - EXECUTION

3.1 PREPARATION

A. Protect and maintain benchmarks and survey control points from disturbance during construction.

B. Provide erosion-control measures to prevent soil erosion and discharge of soil-bearing water runoff or airborne dust to adjacent properties and walkways.

C. Locate and clearly flag trees and vegetation to remain or to be relocated.

D. Protect existing site improvements to remain from damage during construction.
   1. Restore damaged improvements to their original condition, as acceptable to Owner.

3.2 TREE PROTECTION

A. Erect and maintain a temporary fence around drip line of individual trees or around perimeter drip line of groups of trees to remain. Remove fence when construction is complete.
   1. Do not store construction materials, debris, or excavated material within drip line of remaining trees.
   2. Do not permit vehicles, equipment, or foot traffic within drip line of remaining trees.

B. Do not excavate within drip line of trees, unless otherwise indicated.

C. Where excavation for new construction is required within drip line of trees, hand clear and excavate to minimize damage to root systems. Use narrow-tine spading forks, comb soil to expose roots, and cleanly cut roots as close to excavation as possible.
   1. Cover exposed roots with burlap and water regularly.

2. Temporarily support and protect roots from damage until they are permanently relocated and covered with soil.
3. Coat cut faces of roots more than 1-1/2 inches (38 mm) in diameter with an emulsified asphalt or other approved coating formulated for use on damaged plant tissues.
4. Cover exposed roots with wet burlap to prevent roots from drying out. Backfill with soil as soon as possible.

D. Repair or replace trees and vegetation indicated to remain that are damaged by construction operations, in a manner approved by Architect.
1. Employ a qualified arborist, licensed in jurisdiction where Project is located, to submit details of proposed repairs and to repair damage to trees and shrubs.
2. Replace trees that cannot be repaired and restored to full-growth status, as determined by the qualified arborist.

3.3 UTILITIES

A. Locate, identify, disconnect, and seal or cap off utilities indicated to be removed.
1. Arrange to shut off indicated utilities with utility companies.

B. Existing Utilities: Do not interrupt utilities serving facilities occupied by Owner or others unless permitted under the following conditions and then only after arranging to provide temporary utility services according to requirements indicated:
1. Notify Architect not less than two days in advance of proposed utility interruptions.
2. Do not proceed with utility interruptions without Architect's written permission.

C. Excavate for and remove underground utilities indicated to be removed.

3.4 CLEARING AND GRUBBING

A. Remove obstructions, asphalt & concrete paving, trees, shrubs, grass, and other vegetation to permit installation of new construction. Removal includes digging out stumps and obstructions and grubbing roots.
1. Do not remove trees, shrubs, and other vegetation indicated to remain or to be relocated.
2. Cut minor roots and branches of trees indicated to remain in a clean and careful manner where such roots and branches obstruct installation of new construction.
3. Completely remove stumps, roots, obstructions, and debris extending to a depth of 18 inches (450 mm) below exposed subgrade.
4. Use only hand methods for grubbing within drip line of remaining trees.

B. Fill depressions caused by clearing and grubbing operations with satisfactory soil material, unless further excavation or earthwork is indicated.
1. Place fill material in horizontal layers not exceeding 8-inch (200-mm) loose depth, and compact each layer to a density equal to adjacent original ground.

3.5 TOPSOIL STRIPPING

A. Remove sod, grass, asphalt and concrete paving before stripping topsoil.

B. Strip topsoil to whatever depths are encountered in a manner to prevent intermingling with underlying subsoil or other waste materials.
   1. Strip surface soil of unsuitable topsoil, including trash, debris, weeds, roots, and other waste materials.

C. Stockpile topsoil materials away from edge of excavations without intermixing with subsoil. Grade and shape stockpiles to drain surface water. Cover to prevent windblown dust.
   1. Limit height of topsoil stockpiles to 72 inches (1800 mm).
   2. Do not stockpile topsoil within drip line of remaining trees.
   3. Dispose of excess topsoil as specified for waste material disposal.
   4. Stockpile surplus topsoil and allow for respreading deeper topsoil.

3.6 SITE IMPROVEMENTS

A. Remove existing above- and below-grade improvements as indicated and as necessary to facilitate new construction.

B. Remove slabs, paving, curbs, gutters, and aggregate base as indicated.
   1. Unless existing full-depth joints coincide with line of demolition, neatly saw-cut length of existing pavement to remain before removing existing pavement. Saw-cut faces vertically.

3.7 DISPOSAL

A. Disposal: Remove surplus soil material, unsuitable topsoil, obstructions, demolished materials, and waste materials, including trash and debris, and legally dispose of them off Owner's property.

END OF DOCUMENT 311000

SECTION 31 22 00

SITE EXCAVATION AND ROUGH GRADING

PART 1 -GENERAL

1.1 DESCRIPTION

A. Definitions:
   1. Unsuitable material: Debris and/or soil material judged unsuitable by Engineer for support of slabs or other site improvements.
   2. Engineer: Soils Engineer employed by Owner, empowered to conduct inspections and make approvals.

1.2 QUALITY ASSURANCE

A. Compaction density test:
   1. Modified Proctor, ASTM-D 1557.

B. Layout work by Surveyor or Civil Engineer registered in the State of Utah. Identify benchmark to be used in establishing grades.

C. Owner will hire an independent soils laboratory to conduct in place moisture and density tests.

D. Tolerances of sub-grade:
   1. Unsurfaced areas: Plus/minus 0.20 FT from required elevations.
   2. Paved areas: Plus/minus 0.10 FT from required elevations.

1.3 JOB CONDITIONS

A. Protect existing facilities, utilities (overhead and underground), sidewalks, pavement.
   1. Repair damaged items.
   2. Notify Owner and make emergency repair as directed.

B. Protect graded areas against erosion.
   1. Re-establish grade where settlement or washing occurs at no extra cost.

PART 2 -PRODUCTS

2.1 MATERIALS

A. Fill materials:
   1. Reasonably free of roots, organic material, trash, frozen matter, and stones larger than 6 IN.
   2. Add water to dry material, as required.
   3. Allow wet material to dry, as required.
   4. Fill can only be obtained on site where removed from excavating and grading.
   5. Provide additional off-site borrow or fill as required.

B. Surplus material:

   1. Remove from site.

PART 3 -EXECUTION

3.1 PREPARATION

A. Layout units, structures, piping, roads, parking areas and walks and establish their elevations.

B. Perform other layout work required.

C. Preparation for embankments and fills:
1. Remove topsoil over areas to be cut and filled that was not previously removed by stripping and grubbing.
2. Remove all unconsolidated fill as described in the Geotechnical Investigation report prepared by Applied GeoTech dated November 25, 2024.
3. Before fill is started, scarify to a minimum depth of 6 IN under new roads, parking lots, or streets.
3. Bring to optimum moisture content.
4. Compact to a minimum 90 percent.
5. In areas where existing ground surface is steeper than one vertical to four horizontal, bench surface in order to spread fill horizontally so that fill material will bond with existing surface.

3.2 GENERAL

A. Excavate and grade materials to design elevations.

B. Excavate and grade site to subgrades of paved and unpaved areas as indicated.

C. Excavate for miscellaneous footings, slabs, walks and other structures.

D. Cut and fill as required to bring existing grades to rough grades.

E. Furnish and place additional approved material required to bring subgrade to proper line and grade.

F. During construction, shape and drain embankments and excavation.

G. Maintain ditches and drains to provide drainage.

H. Provide pumping if required.

I. Remove unsuitable materials which cannot be compacted as specified and replace with suitable material.
1. Dispose material on site as directed.
2. Dispose material off site as directed.

J. Remove materials unsuitable to receive fill and replace with suitable material.

3.3 CONSTRUCTION OF EMBANKMENTS AND FILLS

A. Construct embankments and fills to lines and grades.

B. Make completed fill correspond to shape of typical cross section or contour indicated regardless of method used to indicate shape, size, and extent of line and grade of work.

C. Insure that cobbles larger than 4 IN, are not placed in upper 6 IN of fill or embankment.

D. Place material in lifts, maximum 8 IN loose thickness.

E. Place layers horizontally and compact each layer to specified density prior to placing additional fill.

F. Compact using suitable equipment.
1. Control moisture to meet requirements of compaction.
2. Place materials within 3 percent above to 3 percent below optimum moisture content.

G. Under roadways and parking areas and extending 1 FT beyond proposed curb line measured perpendicular from centerline, compact to 95 percent maximum dry density.

H. Under walk paving, compact to 95 percent maximum dry density.

I. For other embankments and fills not listed, compact to 90 percent of maximum dry density.

J. Under proposed building and structures, compact to density as specified in Section 31 23 00.

END OF DOCUMENT 312200

SECTION 31 2300

EARTHWORK

PART 1 - GENERAL

1.1 RELATED DOCUMENTS

A. Drawings and general provisions of the Contract, including General and Supplementary Conditions and Division 1 Specification Sections, apply to this Section.

1.2 SUMMARY

A. This Section includes the following:
1. Preparing subgrades for slabs-on-grade, walks, pavements, lawns, and plantings.
2. Excavating and backfilling for buildings and structures.
3. Drainage course for slabs-on-grade.
4. Subbase course for concrete walks and pavements.
5. Base course for asphalt paving.
6. Subsurface drainage backfill for walls and trenches.
7. Excavating and backfilling trenches within building lines.
8. Excavating and backfilling trenches for buried mechanical and electrical utilities and pits for buried utility structures.

B. Related Sections include the following:
1. Division 1 Section "Construction Facilities and Temporary Controls."
2. Division 31 Section "Site Clearing" for site stripping, grubbing, removing topsoil, and protecting trees to remain.

1.3 DEFINITIONS

A. Backfill: Soil materials used to fill an excavation.
1. Initial Backfill: Backfill placed beside and over pipe in a trench, including haunches to support sides of pipe.
2. Final Backfill: Backfill placed over initial backfill to fill a trench.

B. Base Course: Layer placed between the subbase course and asphalt paving.

C. Bedding Course: Layer placed over the excavated subgrade in a trench before laying pipe.

D. Borrow: Satisfactory soil imported from off-site for use as fill or backfill.

E. Drainage Course: Layer supporting slab-on-grade used to minimize capillary flow of pore water.

F. Excavation: Removal of material encountered above subgrade elevations.
1. Bulk Excavation: Excavations more than 10 feet (3 m) in width and pits more than 30 feet (9 m) in either length or width.
2. Unauthorized Excavation: Excavation below subgrade elevations or beyond indicated dimensions without direction by Architect. Unauthorized excavation, as well as remedial work directed by Architect, shall be without additional compensation.

G. Fill: Soil materials used to raise existing grades.

H. Structures: Buildings, footings, foundations, retaining walls, slabs, tanks, curbs, mechanical and electrical appurtenances, or other man-made stationary features constructed above or below the ground surface.

I. Subbase Course: Layer placed between the subgrade and base course for asphalt paving, or layer placed between the subgrade and a concrete pavement or walk.

J. Subgrade: Surface or elevation remaining after completing excavation, or top surface of a fill or backfill immediately below subbase, drainage fill, or topsoil materials.

K. Utilities: Utilities include on-site underground pipes, conduits, ducts, and cables, as well as underground services within buildings.

1.4 SUBMITTALS

A. Material Test Reports: From a qualified testing agency indicating and interpreting test results for compliance of the following with requirements indicated:
   1. Classification according to ASTM D 2487 of each on-site or borrow soil material proposed for fill and backfill.
   2. Laboratory compaction curve according to ASTM D 1557 for each on-site or borrow soil material proposed for fill and backfill.

1.5 PROJECT CONDITIONS

A. Site Information: A Geotechnical Investigation of this site has been prepared. Data on indicated subsurface conditions are not intended as representations or warranties of accuracy or continuity between soil borings. It is expressly understood that Owner will not be responsible for interpretations or conclusions drawn therefrom by Contractor. Data are made available for convenience of Contractor.
   1. Additional test borings and other exploratory operations may be made by Contractor at no cost to Owner.

B. No additional monies for exporting or importing of soil.
   1. As part of the Construction Documents, Owner may have provided Contractor with a Topographic Survey performed by manual or aerial means. Such Survey was prepared for project design purposes and is provided to the Contractor as a courtesy. It is expressly understood that such survey may not accurately reflect existing topographical conditions and typically will vary from actual conditions by a significant degree. It is the Contractor's responsibility to verify actual existing conditions by whatever means the Contractor deems appropriate. The Contractor shall be responsible for determining their own earthwork quantities and not rely on any estimate prepared by the Owner, its Agents or outside parties. The Contractor is responsible as part of its lump sum bid price for the project, for importing or exporting soils to achieve final sub-grades with suitable soils per the plans and specifications. No additional monies will be allowed beyond the Contractor's Lump Sum Bid Price for the project, for the exporting or importing of soils.

C. Existing Utilities: Locate existing underground utilities in areas of work. If utilities are to remain in place, provide adequate means of support and protection during earthwork operations.
   1. Should uncharted, or incorrectly charted, piping or other utilities be encountered during excavation, consult utility owner immediately for directions. Cooperate with Owner and utility companies in keeping respective services and facilities in operation. Repair damaged utilities to satisfaction of utility owner.
   2. Do not interrupt utilities serving facilities occupied by Owner or others unless permitted in writing by Architect and then only after arranging to provide temporary utility services according to requirements indicated:
   3. Notify Architect not less than seven (7) days in advance of proposed utility interruptions.
   4. Do not proceed with utility interruptions without Architect's written permission.
   5. Contact utility-locator service for area where Project is located before excavating.

D. Utilities to be removed: Demolish and completely remove from site existing underground utilities indicated to be removed. Coordinate with utility companies to shut off services if lines are active.

E. Protection of Persons and Property: Barricade open excavations occurring as part of this work and post with warning lights.
   1. Operate warning lights as recommended by authorities having jurisdiction.

PART 2 - PRODUCTS

2.1 SOIL MATERIALS

A. General: Provide borrow soil materials when sufficient satisfactory soil materials are not available from excavations.

B. Satisfactory Soils: ASTM D 2487 soil classification groups GW, GP, GM, SW, SP, and SM, or a combination of these group symbols; free of rock or gravel larger than 4 inches (100 mm) in any dimension, debris, waste, frozen materials, vegetation, and other deleterious matter.

C. Unsatisfactory Soils: ASTM D 2487 soil classification groups GC, SC, ML, MH, CL, CH, OL, OH, and PT, or a combination of these group symbols.
   1. Unsatisfactory soils also include satisfactory soils not maintained within 2 percent of optimum moisture content at time of compaction.

D. Backfill and Fill: Satisfactory soil materials.

E. Subbase: Naturally or artificially well graded mixture of natural or crushed gravel, crushed stone, and natural or crushed sand; ASTM D 2940; with at least 70 percent passing a 3/4- inch (18-mm) sieve and not more than 25 percent passing a No. 200 (0.075-mm) sieve.

F. Base Course: Naturally or artificially graded mixture of natural or crushed gravel, crushed stone, and natural or crushed sand; ASTM D 2940; conforming to the 1 inch gradation requirements of Section 301 of the UDOT Standard Specification for Road and Bridge Construction.

G. Engineered Fill: Naturally or artificially graded mixture of natural or crushed gravel, crushed stone, and natural or crushed sand; ASTM D 2940; with at least 70 percent passing a 3/4-inch (18-mm) sieve and not more than 25 percent passing a No. 200 (0.075-mm) sieve.

H. Bedding: Naturally or artificially graded mixture of natural or crushed gravel, crushed stone, and natural or crushed sand; ASTM D 2940; except with 100 percent passing a 1-inch (25-mm) sieve and not more than 8 percent passing a No. 200 (0.075-mm) sieve.

I. Drainage Fill: Washed, narrowly graded mixture of crushed stone, or crushed or uncrushed gravel; ASTM D 448; coarse-aggregate grading Size 57; with 100 percent passing a 1-1/2- inch (38-mm) sieve and 0 to 5 percent passing a No. 8 (2.36-mm) sieve.

J. Filter Material: Narrowly graded mixture of natural or crushed gravel, or crushed stone and natural sand; ASTM D 448; coarse-aggregate grading Size 67; with 100 percent passing a 1-inch (25-mm) sieve and 0 to 5 percent passing a No. 4 (4.75-mm) sieve.

K. Impervious Fill: Clayey gravel and sand mixture capable of compacting to a dense state.

2.2 ACCESSORIES

A. Warning Tape: Acid- and alkali-resistant polyethylene film warning tape manufactured for marking and identifying underground utilities, 6 inches (150 mm) wide and 4 mils (0.1 mm) thick, continuously inscribed with a description of the utility; colored as follows:

B. Detectable Warning Tape: Acid- and alkali-resistant polyethylene film warning tape manufactured for marking and identifying underground utilities, minimum 6 inches (150 mm) wide and 4 mils (0.1 mm) thick, continuously inscribed with a description of utility, with metallic core encased in a protective jacket for corrosion protection, detectable by metal detector when tape is buried up to 30 inches (750 mm) deep; colored as follows:
1. Red: Electric.
2. Yellow: Gas, oil, steam, and dangerous materials.
3. Orange: Telephone and other communications.
4. Blue: Water systems.
5. Green: Sewer systems.

C. Trace Wire: Insulated 12 gage copper, suitable for direct bury.

PART 3 - EXECUTION

3.1 PREPARATION

A. Protect structures, utilities, sidewalks, pavements, and other facilities from damage caused by settlement, lateral movement, undermining, washout, and other hazards created by earthwork operations.

B. Protect subgrades and foundation soils against freezing temperatures or frost. Provide protective insulating materials as necessary.

C. Provide erosion-control measures to prevent erosion or displacement of soils and discharge of soil-bearing water runoff or airborne dust to adjacent properties and walkways.

3.2 DEWATERING

A. Prevent surface water and ground water from entering excavations, from ponding on prepared subgrades, and from flooding Project site and surrounding area.

B. Protect subgrades from softening, undermining, washout, and damage by rain or water accumulation.
1. Reroute surface water runoff away from excavated areas. Do not allow water to accumulate in excavations. Do not use excavated trenches as temporary drainage ditches.
2. Install a dewatering system to keep subgrades dry and convey ground water away from

excavations. Maintain until dewatering is no longer required.

3.3 EXPLOSIVES

A. Explosives: Do not use explosives.

3.4 EXCAVATION, GENERAL

A. Unclassified Excavation: Excavation to subgrade elevations regardless of the character of surface and subsurface conditions encountered, including rock, soil materials, and obstructions.
   1. If excavated materials intended for fill and backfill include unsatisfactory soil materials and rock, replace with satisfactory soil materials.

3.5 EXCAVATION FOR STRUCTURES

A. Excavate to indicated elevations and dimensions within a tolerance of plus or minus 0.1 FT (25 mm). Extend excavations a sufficient distance from structures for placing and removing concrete formwork, for installing services and other construction, and for inspections.
   1. Excavations for Footings and Foundations: Do not disturb bottom of excavation. If required to not disturb bottom of excavation, excavate by hand to final grade just before placing concrete reinforcement. Trim bottoms to required lines and grades to leave solid base to receive other work.
   2. Excavation for Underground Mechanical or Electrical Utility Structures: Excavate to elevations and dimensions indicated within a tolerance of plus or minus 0.1 FT (25 mm). Do not disturb bottom of excavations intended for bearing surface.

3.6 EXCAVATION FOR WALKS AND PAVEMENTS

A. Excavate surfaces under walks and pavements to indicated cross sections, elevations, and grades.

3.7 EXCAVATION FOR UTILITY TRENCHES

A. Trench Excavation: Excavate trenches to indicated gradients, lines, depths, and elevations.
   1. Beyond building perimeter, excavate trenches to allow installation of top of pipe below frost line.
   2. Trench Clearance: Excavate trenches to uniform widths to provide a working clearance on each side of pipe or conduit. Excavate trench walls vertically from trench bottom to 12 inches (300 mm) higher than top of pipe or conduit, unless otherwise indicated.
   3. Clearance: 12 inches (300 mm) on each side of pipe or conduit.

C. Trench Bottoms: Excavate and shape trench bottoms to provide uniform bearing and support of pipes and conduit. Shape subgrade to provide continuous support for bells, joints, and barrels of pipes and for joints, fittings, and bodies of conduits. Remove projecting stones and sharp objects along trench subgrade.
   1. For pipes and conduit less than 6 inches (150 mm) in nominal diameter and flat-bottomed, multiple-duct conduit units, hand-excavate trench bottoms and support pipe and conduit on an undisturbed subgrade.
   2. For pipes and conduit 6 inches (150 mm) or larger in nominal diameter, shape bottom of trench to support bottom 90 degrees of pipe circumference. Fill depressions with tamped sand backfill.
   3. Excavate trenches 6 inches (150 mm) deeper than elevation required in rock or other unyielding bearing material to allow for bedding course.

D. Trench Bottoms: Excavate trenches 4 inches (100 mm) deeper than bottom of pipe elevation to

allow for bedding course. Hand excavate for bell of pipe.

1. Excavate trenches 6 inches (150 mm) deeper than elevation required in rock or other unyielding bearing material to allow for bedding course.

3.8 TRENCH SUPPORT SYSTEMS

A. Trench support system shall be suitable for the soil structure, depth of cut, water content of soil, weather conditions, superimposed loads and vibration. Contractor may select one of the following methods of ensuring the safety of workers in the trench, as approved by the Utah State Industrial Commission or its safety inspectors:

1. Sloping the sides of the trench to the angle of repose at which the soil will remain safely at rest.
2. Shoring trench sides by placing sheeting, timber shores, trench jacks, bracing, piles, or other materials to resist pressures surrounding the excavation.
3. Using a movable trench box built-up of steel plates and heavy steel frame of sufficient strength to resist the pressures surrounding the excavation

3.9 APPROVAL OF SUBGRADE

A. Notify Architect when excavations have reached required subgrade.

B. If Architect determines that unsatisfactory soil is present, continue excavation and replace with compacted backfill or fill material as directed.

C. Proof roll subgrade with heavy pneumatic-tired equipment to identify soft pockets and areas of excess yielding. Do not proof roll wet or saturated subgrades.

D. Reconstruct subgrades damaged by freezing temperatures, frost, rain, accumulated water, or construction activities, as directed by Architect.

3.10 UNAUTHORIZED EXCAVATION

A. Fill unauthorized excavation under foundations or wall footings by extending bottom elevation of concrete foundation or footing to excavation bottom, without altering top elevation. Lean concrete fill may be used when approved by Architect.

1. Fill unauthorized excavations under other construction or utility pipe as directed by Architect.

3.11 STORAGE OF SOIL MATERIALS

A. Stockpile borrow materials and satisfactory excavated soil materials. Stockpile soil materials without intermixing. Place, grade, and shape stockpiles to drain surface water. Cover to prevent windblown dust.

1. Stockpile soil materials away from edge of excavations. Do not store within drip line of remaining trees.

3.12 BACKFILL

A. Place and compact backfill in excavations promptly, but not before completing the following:

1. Construction below finish grade including, where applicable, dampproofing, waterproofing, and perimeter insulation.
2. Surveying locations of underground utilities for record documents.
3. Inspecting and testing underground utilities.

4. Removing concrete formwork.
5. Removing trash and debris.
6. Removing temporary shoring and bracing, and sheeting.
7. Installing permanent or temporary horizontal bracing on horizontally supported walls.

3.13 UTILITY TRENCH BACKFILL

A. Place and compact bedding course on trench bottoms and where indicated. Shape bedding course to provide continuous support for bells, joints, and barrels of pipes and for joints, fittings, and bodies of conduits.

B. Backfill trenches excavated under footings and within 18 inches (450 mm) of bottom of footings; fill with concrete to elevation of bottom of footings.

C. Provide 4-inch- (100-mm-) thick, concrete-base slab support for piping or conduit less than 30 inches (750 mm) below surface of roadways. After installing and testing, completely encase piping or conduit in a minimum of 4 inches (100 mm) of concrete before backfilling or placing roadway subbase.

D. Place and compact initial backfill of subbase material, free of particles larger than 1 inch (25 mm), to a height of 12 inches (300 mm) over the utility pipe or conduit.
   1. Carefully compact material under pipe haunches and bring backfill evenly up on both sides and along the full length of utility piping or conduit to avoid damage or displacement of utility system.

E. Coordinate backfilling with utilities testing.

F. Place and compact final backfill of satisfactory soil material to final subgrade.

G. Install warning tape directly above utilities, 12 inches (300 mm) below finished grade, except 6 inches (150 mm) below subgrade under pavements and slabs.

3.14 FILL

A. Preparation: Remove vegetation, topsoil, debris, unsatisfactory soil materials, obstructions, and deleterious materials from ground surface before placing fills.

B. Plow, scarify, bench, or break up sloped surfaces steeper than 1 vertical to 4 horizontal so fill material will bond with existing material.

C. Place and compact fill material in layers to required elevations as follows:
   1. Under grass and planted areas, use satisfactory soil material.
   2. Under walks and pavements, use satisfactory soil material.
   3. Under steps and ramps, use engineered fill.
   4. Under building slabs, use engineered fill.
   5. Under footings and foundations, use engineered fill.

3.15 MOISTURE CONTROL

A. Uniformly moisten or aerate subgrade and each subsequent fill or backfill layer before compaction to within 2 percent of optimum moisture content.
   1. Do not place backfill or fill material on surfaces that are muddy, frozen, or contain frost or ice.

2. Remove and replace, or scarify and air-dry, otherwise satisfactory soil material that exceeds optimum moisture content by 2 percent and is too wet to compact to specified dry unit weight.

3.16 COMPACTION OF BACKFILLS AND FILLS

A. Place backfill and fill materials in layers not more than 8 inches (200 mm) in loose depth for material compacted by heavy compaction equipment, and not more than 4 inches (100 mm) in loose depth for material compacted by hand-operated tampers.

B. Place backfill and fill materials evenly on all sides of structures to required elevations, and uniformly along the full length of each structure.

C. Compact soil to not less than the following percentages of maximum dry unit weight according to ASTM D 1557:
   1. Under structures, building slabs, steps, and pavements, scarify and recompact top 6 inches (150 mm) of existing subgrade and each layer of backfill or fill material at 95 percent. Compact to 98 percent for fills thicker than 6 feet deep.
   2. Under walkways, scarify and recompact top 6 inches (150 mm) below subgrade and compact each layer of backfill or fill material at 95 percent.
   3. Under lawn or unpaved areas, scarify and recompact top 6 inches (150 mm) below subgrade and compact each layer of backfill or fill material at 90 percent.

3.17 GRADING

A. General: Uniformly grade areas to a smooth surface, free from irregular surface changes. Comply with compaction requirements and grade to cross sections, lines, and elevations indicated.
   1. Provide a smooth transition between adjacent existing grades and new grades.
   2. Cut out soft spots, fill low spots, and trim high spots to comply with required surface tolerances.

B. Site Grading: Slope grades to direct water away from buildings and to prevent ponding. Finish subgrades to required elevations within the following tolerances:
   1. Lawn or Unpaved Areas: Plus or minus 0.2 FT (25 mm).
   2. Walks: Plus or minus 0.1 FT (25 mm).
   3. Pavements: Plus or minus 0.1 FT (13 mm).

C. Grading inside Building Lines: Finish subgrade to a tolerance of 0.1 FT (13 mm) when tested with a 10-foot (3-m) straightedge.

3.18 SUBBASE AND BASE COURSES

A. Under pavements and walks, place subbase course on prepared subgrade and as follows:
   1. Place base course material over subbase.
   2. Compact subbase and base courses at optimum moisture content to required grades, lines, cross sections, and thickness to not less than 95 percent of maximum dry unit weight according to ASTM D 1557.
   3. Shape subbase and base to required crown elevations and cross-slope grades.
   4. When thickness of compacted subbase or base course is 6 inches (150 mm) or less, place materials in a single layer.
   5. When thickness of compacted subbase or base course exceeds 6 inches (150 mm), place materials in equal layers, with no layer more than 6 inches (150 mm) thick or less than 3 inches (75 mm) thick when compacted.

B. Pavement Shoulders: Place shoulders along edges of subbase and base course to prevent lateral movement. Construct shoulders, at least 12 inches (300 mm) wide, of satisfactory soil materials and compact simultaneously with each subbase and base layer to not less than 95 percent of maximum dry unit weight according to ASTM D 1557.

3.19 DRAINAGE COURSE

A. Under slabs-on-grade, place drainage course on prepared subgrade and as follows:
1. Compact drainage course to required cross sections and thickness to not less than 95 percent of maximum dry unit weight according to ASTM D 698.
2. When compacted thickness of drainage course is 6 inches (150 mm) or less, place materials in a single layer.
3. When compacted thickness of drainage course exceeds 6 inches (150 mm), place materials in equal layers, with no layer more than 6 inches (150 mm) thick or less than 3 inches (75 mm) thick when compacted.

3.20 FIELD QUALITY CONTROL

A. Testing Agency: Owner will engage a qualified independent geotechnical engineering testing agency to perform field quality-control testing.

B. Allow testing agency to inspect and test subgrades and each fill or backfill layer. Proceed with subsequent earthwork only after test results for previously completed work comply with requirements.

C. Footing Subgrade: At footing subgrades, at least one test of each soil stratum will be performed to verify design bearing capacities. Subsequent verification and approval of other footing subgrades may be based on a visual comparison of subgrade with tested subgrade when approved by Architect.

D. Testing agency will test compaction of soils in place according to ASTM D 1556, ASTM D 2167, ASTM D 2922, and ASTM D 2937, as applicable. Tests will be performed at the following locations and frequencies:
1. Paved and Building Slab Areas: At subgrade and at each compacted fill and backfill layer, at least one test for every 1000 sq. ft. (186 sq. m) or less of paved area or building slab, but in no case fewer than three tests.
2. Foundation Wall/Continuous Footing Backfill: At each compacted backfill layer, at least one test for each 15 linear feet or less of wall length, but no fewer than two tests.
3. Trench Backfill: At each compacted initial and final backfill layer, at least one test for each 40 feet or less of trench length, but no fewer than two tests.
4. Spot Footings: Minimum of 1 compaction test for each lift for each spot footing.
5. Sidewalks, Curbs, Gutters, Pads: Minimum of 1 test for each lift for each 40 lineal feet or 1 test for every 1000 sq. ft. or less of paved area or building slab, but in no case fewer than three tests.

E. When testing agency reports that subgrades, fills, or backfills have not achieved degree of compaction specified, scarify and moisten or aerate, or remove and replace soil to depth required; recompact and retest until specified compaction is obtained.

3.21 PROTECTION

A. Protecting Graded Areas: Protect newly graded areas from traffic, freezing, and erosion. Keep free of trash and debris.

B. Repair and reestablish grades to specified tolerances where completed or partially completed surfaces become eroded, rutted, settled, or where they lose compaction due to subsequent construction operations or weather conditions.
   1. Scarify or remove and replace soil material to depth as directed by Architect; reshape and recompact.

C. Where settling occurs before Project correction period elapses, remove finished surfacing, backfill with additional soil material, compact, and reconstruct surfacing.
   1. Restore appearance, quality, and condition of finished surfacing to match adjacent work, and eliminate evidence of restoration to the greatest extent possible.

3.22 DISPOSAL OF SURPLUS AND WASTE MATERIALS

A. Disposal: Remove surplus satisfactory soil and waste material, including unsatisfactory soil, trash, and debris, and legally dispose of it off Owner's property.

END OF DOCUMENT 312300

SECTION 313116 - TERMITE CONTROL

PART 1 - GENERAL

1.1 SUBMITTALS

A. Product Data: For each type of product.
   1. Include the EPA-Registered Label for termiticide products.

B. Qualification Data: For Installer of termite control products, including licensing records and application reports as required by local authorities.

C. Product Certificates: For each type of termite control product, signed by product manufacturer.

D. Soil Treatment Application Report: After application of termiticide is completed, submit report for Owner's records and include the following:
   1. Date and time of application.
   2. Moisture content of soil before application.
   3. Termiticide brand name and manufacturer.
   4. Quantity of undiluted termiticide used.
   5. Dilutions, methods, volumes used, and rates of application.
   6. Areas of application.
   7. Water source for application.

E. Research/Evaluation Reports: For barrier system, from agency acceptable to authorities having jurisdiction.

F. Sample Warranties: For special warranties.

1.2 QUALITY ASSURANCE

A. Installer Qualifications: A specialist who is licensed according to regulations of authorities having jurisdiction to apply termite control treatment and products in jurisdiction where Project is located and who is accredited by manufacturer.

1.3 WARRANTY

A. Soil Treatment Special Warranty: Manufacturer's standard form, signed by Applicator and Contractor, certifying that termite control work consisting of applied soil termiticide treatment will prevent infestation of subterranean termites. If subterranean termite activity or damage is discovered during warranty period, re-treat soil and repair or replace damage caused by termite infestation.
   1. Warranty Period: Three years from date of Substantial Completion.

B. Polymer Barrier System Termite Infestation Warranty: Manufacturer warrants that their ASTM E1745 classified polymer-based sheet barrier system, constructed without chemical termiticides, will prevent under-slab termite infestation caused by termite penetration of the barrier material. If subterranean termite damage is discovered and certified during warranty period, manufacturer's warranty shall at least provide for a refund of the purchase price or replacement of the barrier material.
   1. Warranty Period: Five years from date of Substantial Completion or 60 days from installation, whichever occurs first.

PART 2 - PRODUCTS

2.1 MANUFACTURERS

A. Source Limitations: Obtain termite control products from single source from single manufacturer for each product.

2.2 SOIL TREATMENT

A. Termiticide: EPA-Registered termiticide acceptable to authorities having jurisdiction, in an aqueous solution formulated to prevent termite infestation. Provide quantity required for application at the label volume and

rate for the maximum termiticide concentration allowed for each specific use, according to product's EPA-Registered Label.

1. Products: Provide one of the following, or Architect-approved substitution.
   a. BASF Corporation; Termidor.
   b. Bayer Environmental Science; Premise.
   c. Syngenta; Altriset or Demon Max.
2. Service Life of Treatment: Soil treatment termiticide that is effective for not less than three years against infestation of subterranean termites.
3. Active Ingredient: Fipronil, unless otherwise approved by local authorities.
4. A list of currently approved termiticides is available from local authorities.

2.3 BARRIER SYSTEMS

A. Flexible Aluminum Barrier System: Flex-Temper, Ultra Marine Grade Aluminum.
   1. Products: Provide the following, or Architect-approved substitution.
      a. Ensystex Inc.: ARMORTHOR Termite Security System.

B. Stainless-Steel Mesh: 0.025-by-0.018 inch (0.64-by-0.45 mm) mesh of 0.08-inch (2.0-mm) diameter, stainless-steel wire, Type 316.
   1. Manufacturers: Provide products from the following, or Architect-approved substitution.
      a. Termimesh USA Inc.

C. Polymer-Based Sheet: Multi-layered, 15 mil (0.381 mm) thick, polyolefin plastic extrusion termite barrier system; ASTM E1745, Class C, under-slab vapor retarder.
   1. Products: Provide the following, or Architect-approved substitution.
      a. Stego Industries, LLC: Pango Wrap.
   2. Properties:
      a. Water Vapor Permeance: 0.010 perms (0.576 ng/Pa*s*sq. m) in accordance with ASTM E1249.
      b. Puncture Resistance: 3.39 lb (1538 grams) in accordance with ASTM D1709.
      c. Push-Through Puncture: 30.93 lbf (137.6 N) in accordance with ASTM D4833.
      d. Tensile Strength: 48.6 lbf/in (8.51 kN/m) in accordance with ASTM D882.
      e. Permeance After Conditioning: 0.010 perms (0.576 ng/Pa*s*sq. m) in accordance with ASTM E154, Sections 8, 11, 12 and 13.
      f. Methane Transmission Rate: 227.8 GTR in accordance with ASTM D1434.
      g. Radon Diffusion Coefficient: 0.000000000215 sq. ft/s (0.00000000002 sq. m/s) in accordance with test K124/02/95.
   3. Accessory Materials: Pipe collars, sealants, and other accessories as recommended by manufacturer for complete installation.

PART 3 - EXECUTION

3.1 APPLYING SOIL TREATMENT

A. Application: Mix soil treatment termiticide solution to a uniform consistency. Distribute treatment uniformly. Apply treatment at the product's EPA-Registered Label volume and rate for maximum specified concentration of termiticide to the following so that a continuous horizontal and vertical termiticidal barrier or treated zone is established around and under building construction.
   1. Concrete Slabs: Under ground-supported slab construction, including footings, building slabs, and attached slabs as an overall treatment. Treat soil materials before concrete footings and slabs are placed.
   2. Foundations: Soil adjacent to and along the entire inside perimeter of foundation walls; along both sides of interior partition walls; around plumbing pipes and electric conduit penetrating the slab; around interior column footers, piers, and chimney bases; and along the entire outside perimeter, from grade to bottom of footings an average minimum depth of 12 inches and maximum depth of four feet, unless otherwise recommended in writing by manufacturer and approved by Architect . Avoid soil washout around footings..
   3. Masonry: Treat voids.

4. Penetrations: At expansion joints, control joints, and areas where slabs and below-grade walls will be penetrated.

B. Post warning signs in areas of application.

C. Reapply soil treatment solution to areas disturbed by subsequent excavation, grading, landscaping, or other construction activities following application.

3.2 INSTALLING BARRIER SYSTEMS

A. Barrier Systems Installation, General:
   1. Install to provide a continuous barrier to entry of subterranean termites, according to manufacturer's written instructions.

B. Polymer-Based Sheet Barrier System: Install polymer-based sheet barrier system to provide a continuous barrier to entry of subterranean termites, according to ASTM E1643 and manufacturer's written instructions.

C. Metal Mesh Barrier System:
   1. Fit mesh tightly around pipes and other penetrations and terminate at slab and foundation perimeters.
   2. Install mesh under the perimeter of concrete slab edges and joints after vapor retarder and reinforcing steel are in place.

3.3 MAINTENANCE PROPOSAL

A. Continuing Maintenance Proposal: Provide from termite-control-treatment Installer to Owner, in the form of a standard yearly (or other period) maintenance agreement, starting on date initial maintenance service is concluded. State services, obligations, conditions, and terms for agreement period and for future renewal options.
   1. Include annual inspection for termite activity and effectiveness of termite treatment according to manufacturer's written instructions.

END OF SECTION

THIS PAGE INTENTIONALLY LEFT BLANK

SECTION 32 1216
ASPHALT PAVING

PART 1 - GENERAL

1.1 RELATED DOCUMENTS

A. Drawings and general provisions of the Contract, including General and Supplementary Conditions and Division 01 Specification Sections, apply to this Section.

1.2 SUMMARY

A. Section Includes:

1. Cold milling of existing asphalt pavement.
2. Hot-mix asphalt patching.
3. Hot-mix asphalt paving.
4. Hot-mix asphalt overlay.
5. Asphalt curbs.
6. Asphalt traffic-calming devices.
7. Asphalt surface treatments.

B. Related Requirements:

1. Section 311000 "Site Clearing" for demolition and removal of existing asphalt pavement.
2. Section 312300 "Earthwork" for subgrade preparation, fill material, unbound-aggregate subbase and base courses, and aggregate pavement shoulders.

1.3 PREINSTALLATION MEETINGS

A. Preinstallation Conference: Conduct conference at site.

1. Review methods and procedures related to hot-mix asphalt paving including, but not limited to, the following:
   a. Review proposed sources of paving materials, including capabilities and location of plant that will manufacture hot-mix asphalt.
   b. Review requirements for protecting paving work, including restriction of traffic during installation period and for remainder of construction period.

1.4 ACTION SUBMITTALS

A. Product Data: For each type of product.

1. Include technical data and tested physical and performance properties.
2. Job-Mix Designs: Certification, by authorities having jurisdiction, of approval of each job mix proposed for the Work.
3. Job-Mix Designs: For each job mix proposed for the Work.

B. LEED Submittals:

1. Product Data for Credit MR 4: For products having recycled content, documentation indicating percentages by weight of postconsumer and preconsumer recycled content. Include statement indicating cost for each product having recycled content.

C. Samples for Verification: For the following product, in manufacturer's standard sizes unless otherwise indicated:

1.5 INFORMATIONAL SUBMITTALS

A. Qualification Data: For [**manufacturer**] [**and**] [**testing agency**].

B. Material Certificates: For each paving material.[**Include statement that mixes containing recycled materials will perform equal to mixes produced from all new materials.**]

C. Material Test Reports: For each paving material, by a qualified testing agency.

D. Field quality-control reports.

1.6 QUALITY ASSURANCE

A. Manufacturer Qualifications: [**A paving-mix manufacturer approved by engineer**] .

B. Testing Agency Qualifications: Qualified according to ASTM D 3666 for testing indicated.

C. Regulatory Requirements: Comply with materials, workmanship, and other applicable requirements of MILLVILLE CITY STANDARDS and UDOT for asphalt paving work.

1. Measurement and payment provisions and safety program submittals included in standard specifications do not apply to this Section.

1.7 FIELD CONDITIONS

A. Environmental Limitations: Do not apply asphalt materials if subgrade is wet or excessively damp, if rain is imminent or expected before time required for adequate cure, or if the following conditions are not met:

1. Prime Coat: Minimum surface temperature of 60 deg F.
2. Tack Coat: Minimum surface temperature of 60 deg F.
3. Slurry Coat: Comply with weather limitations in ASTM D 3910.
4. Asphalt Base Course: Minimum surface temperature of 40 deg F and rising at time of placement.
5. Asphalt Surface Course: Minimum surface temperature of 60 deg F at time of placement.

PART 2 - PRODUCTS

2.1 AGGREGATES

A. General: Use materials and gradations that have performed satisfactorily in previous installations.

B. Coarse Aggregate: ASTM D 692/D 692M, sound; angular crushed stone, crushed gravel, or cured, crushed blast-furnace slag.

C. Fine Aggregate: [**ASTM D 1073**] [**or**] [**AASHTO M 29**], sharp-edged natural sand or sand prepared from stone, gravel, cured blast-furnace slag, or combinations thereof.

1. For hot-mix asphalt, limit natural sand to a maximum of 20 percent by weight of the total aggregate mass.

D. Mineral Filler: [**ASTM D 242/D 242M**] [**or**] [**AASHTO M 17**], rock or slag dust, hydraulic cement, or other inert material.

2.2 ASPHALT MATERIALS

A. Asphalt Binder: AASHTO M 320, [**PG 58-28**]

B. Asphalt Cement: [**ASTM D 3381/D 3381M for viscosity-graded material**] [**ASTM D 946/D 946M for penetration-graded material**].

C. Cutback Prime Coat: ASTM D 2027, medium-curing cutback asphalt, [**MC-30 or MC-70**] [**MC-250**].

D. Emulsified Asphalt Prime Coat: [**ASTM D 977**] [**or**] [**AASHTO M 140**] emulsified asphalt, or [**ASTM D 2397**] [**or**] [**AASHTO M 208**] cationic emulsified asphalt, slow setting, diluted in water, of suitable grade and consistency for application.

E. Tack Coat: [**ASTM D 977**] [**or**] [**AASHTO M 140**] emulsified asphalt, or [**ASTM D 2397**] [**or**] [**AASHTO M 208**] cationic emulsified asphalt, slow setting, diluted in water, of suitable grade and consistency for application.

F. Fog Seal: [**ASTM D 977**] [**or**] [**AASHTO M 140**] emulsified asphalt, or [**ASTM D 2397**] [**or**] [**AASHTO M 208**] cationic emulsified asphalt, slow setting, factory diluted in water, of suitable grade and consistency for application.

G. Water: Potable.

H. Undersealing Asphalt: ASTM D 3141/D 3141M; pumping consistency.

2.3 AUXILIARY MATERIALS

A. Recycled Materials for Hot-Mix Asphalt Mixes: Reclaimed asphalt pavement; reclaimed, unbound-aggregate base material; and recycled [**tires**] [**asphalt shingles**] [**or**] [**glass**] from sources and gradations that have performed satisfactorily in previous installations, equal to performance of required hot-mix asphalt paving produced from all new materials.

B. Herbicide: Commercial chemical for weed control, registered by the EPA, and not classified as "restricted use" for locations and conditions of application. Provide in granular, liquid, or wettable powder form.

C. Sand: [**ASTM D 1073**] [**or**] [**AASHTO M 29**], Grade No. 2 or No. 3.

D. Paving Geotextile: AASHTO M 288 paving fabric; nonwoven polypropylene; resistant to chemical attack, rot, and mildew; and specifically designed for paving applications.

E. Joint Sealant: [**ASTM D 6690**] [**or**] [**AASHTO M 324**], [**Type I**] [**Type II or III**] [**Type IV**], hot-applied, single-component, polymer-modified bituminous sealant.

2.4 MIXES

A. Recycled Content of Hot-Mix Asphalt: Postconsumer recycled content plus one-half of preconsumer recycled content not less than [**10**] percent or more than [**15**] percent by weight.

1. Surface Course Limit: Recycled content no more than [**10**] percent by weight.

B. Hot-Mix Asphalt: Dense-graded, hot-laid, hot-mix asphalt plant mixes [**approved by authorities having jurisdiction**] [**; designed according to procedures in AI MS-2, "Mix Design Methods for Asphalt Concrete and Other Hot-Mix Types";**] and complying with the following requirements:

1. Provide mixes with a history of satisfactory performance in geographical area where Project is located.

2. Base Course: 3/4"

3. Surface Course: 1/2"

C. Emulsified-Asphalt Slurry: ASTM D 3910, [**Type 1**] [**Type 2**] [**Type 3**].

PART 3 - EXECUTION

3.1 EXAMINATION

A. Verify that subgrade is dry and in suitable condition to begin paving.

B. Proof-roll subgrade below pavements with heavy pneumatic-tired equipment to identify soft pockets and areas of excess yielding. Do not proof-roll wet or saturated subgrades.

1. Completely proof-roll subgrade in one direction[**, repeating proof-rolling in direction perpendicular to first direction**]. Limit vehicle speed to 3 mph .

2. Proof roll with a loaded 10-wheel, tandem-axle dump truck weighing not less than 15 tons.

3. Excavate soft spots, unsatisfactory soils, and areas of excessive pumping or rutting, as determined by Architect, and replace with compacted backfill or fill as directed.

C. Proceed with paving only after unsatisfactory conditions have been corrected.

3.2 COLD MILLING

A. Clean existing pavement surface of loose and deleterious material immediately before cold milling. Remove existing asphalt pavement by cold milling to grades and cross sections indicated.

1. Mill to a depth of [**2 inches**]

2. Mill to a uniform finished surface free of excessive gouges, grooves, and ridges.
3. Control rate of milling to prevent tearing of existing asphalt course.
4. Repair or replace curbs, manholes, and other construction damaged during cold milling.
5. Excavate and trim unbound-aggregate base course, if encountered, and keep material separate from milled hot-mix asphalt.
6. Patch surface depressions deeper than 1 inch after milling, before wearing course is laid.
7. Handle milled asphalt material according to approved waste management plan required in Section 017419 "Construction Waste Management and Disposal."
8. Keep milled pavement surface free of loose material and dust.
9. Do not allow milled materials to accumulate on-site.

3.3 PATCHING

A. Asphalt Pavement: Saw cut perimeter of patch and excavate existing pavement section to sound base. Excavate rectangular or trapezoidal patches, extending 12 inches into perimeter of adjacent sound pavement, unless otherwise indicated. Cut excavation faces vertically. Remove excavated material. Recompact existing unbound-aggregate base course to form new subgrade.

B. Portland Cement Concrete Pavement: Break cracked slabs and roll as required to reseat concrete pieces firmly.

1. Pump hot undersealing asphalt under rocking slab until slab is stabilized or, if necessary, crack slab into pieces and roll to reseat pieces firmly.
2. Remove disintegrated or badly cracked pavement. Excavate rectangular or trapezoidal patches, extending into perimeter of adjacent sound pavement, unless otherwise indicated. Cut excavation faces vertically. Recompact existing unbound-aggregate base course to form new subgrade.

C. Tack Coat: Before placing patch material, apply tack coat uniformly to vertical asphalt surfaces abutting the patch. Apply at a rate of 0.05 to 0.15 gal./sq. yd.

1. Allow tack coat to cure undisturbed before applying hot-mix asphalt paving.
2. Avoid smearing or staining adjoining surfaces, appurtenances, and surroundings. Remove spillages and clean affected surfaces.

D. Placing Patch Material: Fill excavated pavement areas with hot-mix asphalt base mix for full thickness of patch and, while still hot, compact flush with adjacent surface.

E. Placing Patch Material: Partially fill excavated pavements with hot-mix asphalt base mix and, while still hot, compact. Cover asphalt base course with compacted, hot-mix surface layer finished flush with adjacent surfaces.

3.4 REPAIRS

A. Leveling Course: Install and compact leveling course consisting of hot-mix asphalt surface course to level sags and fill depressions deeper than 1 inch in existing pavements.

1. Install leveling wedges in compacted lifts not exceeding 3 inches thick.

B. Crack and Joint Filling: Remove existing joint filler material from cracks or joints to a depth of [**1/4 inch**]

1. Clean cracks and joints in existing hot-mix asphalt pavement.
2. Use emulsified-asphalt slurry to seal cracks and joints less than 1/4 inch wide. Fill flush with surface of existing pavement and remove excess.
3. Use hot-applied joint sealant to seal cracks and joints more than 1/4 inch wide. Fill flush with surface of existing pavement and remove excess.

3.5 SURFACE PREPARATION

A. General: Immediately before placing asphalt materials, remove loose and deleterious material from substrate surfaces. Ensure that prepared subgrade is ready to receive paving.

B. Herbicide Treatment: Apply herbicide according to manufacturer's recommended rates and written application instructions. Apply to dry, prepared subgrade or surface of compacted-aggregate base before applying paving materials.

1. Mix herbicide with prime coat if formulated by manufacturer for that purpose.

C. Cutback Prime Coat: Apply uniformly over surface of compacted unbound-aggregate base course at a rate of 0.15 to 0.50 gal./sq. yd.. Apply enough material to penetrate and seal, but not flood, surface. Allow prime coat to cure.

1. If prime coat is not entirely absorbed within 24 hours after application, spread sand over surface to blot excess asphalt. Use enough sand to prevent pickup under traffic. Remove loose sand by sweeping before pavement is placed and after volatiles have evaporated.

2. Protect primed substrate from damage until ready to receive paving.

D. Emulsified Asphalt Prime Coat: Apply uniformly over surface of compacted unbound-aggregate base course at a rate of 0.10 to 0.30 gal./sq. yd. per inch depth. Apply enough material to penetrate and seal, but not flood, surface. Allow prime coat to cure.

1. If prime coat is not entirely absorbed within 24 hours after application, spread sand over surface to blot excess asphalt. Use enough sand to prevent pickup under traffic. Remove loose sand by sweeping before pavement is placed and after volatiles have evaporated.

2. Protect primed substrate from damage until ready to receive paving.

E. Tack Coat: Apply uniformly to surfaces of existing pavement at a rate of 0.05 to 0.15 gal./sq. yd.

1. Allow tack coat to cure undisturbed before applying hot-mix asphalt paving.

2. Avoid smearing or staining adjoining surfaces, appurtenances, and surroundings. Remove spillages and clean affected surfaces.

3.6 PAVING GEOTEXTILE INSTALLATION

A. Apply [**tack coat**] [**asphalt binder**] [**asphalt cement**] uniformly to existing pavement surfaces at a rate of 0.20 to 0.30 gal./sq. yd.

B. Place paving geotextile promptly according to manufacturer's written instructions. Broom or roll geotextile smooth and free of wrinkles and folds. Overlap longitudinal joints 4 inches and transverse joints 6 inches

C. Protect paving geotextile from traffic and other damage, and place hot-mix asphalt overlay the same day.

3.7 PLACING HOT-MIX ASPHALT

A. Machine place hot-mix asphalt on prepared surface, spread uniformly, and strike off. Place asphalt mix by hand in areas inaccessible to equipment in a manner that prevents segregation of mix. Place each course to required grade, cross section, and thickness when compacted.

1. Place hot-mix asphalt base course in number of lifts and thicknesses indicated.

2. Place hot-mix asphalt surface course in single lift.

3. Spread mix at a minimum temperature of 250 deg F

4. Begin applying mix along centerline of crown for crowned sections and on high side of one-way slopes unless otherwise indicated.

5. Regulate paver machine speed to obtain smooth, continuous surface free of pulls and tears in asphalt-paving mat.

B. Place paving in consecutive strips not less than 10 feet wide unless infill edge strips of a lesser width are required.

1. After first strip has been placed and rolled, place succeeding strips and extend rolling to overlap previous strips. Overlap mix placement about 1 to 1-1/2 inches from strip to strip to ensure proper compaction of mix along longitudinal joints.

2. Complete a section of asphalt base course before placing asphalt surface course.

C. Promptly correct surface irregularities in paving course behind paver. Use suitable hand tools to remove excess material forming high spots. Fill depressions with hot-mix asphalt to prevent segregation of mix; use suitable hand tools to smooth surface.

3.8 JOINTS

A. Construct joints to ensure a continuous bond between adjoining paving sections. Construct joints free of depressions, with same texture and smoothness as other sections of hot-mix asphalt course.

1. Clean contact surfaces and apply tack coat to joints.
2. Offset longitudinal joints, in successive courses, a minimum of 6 inches
3. Offset transverse joints, in successive courses, a minimum of 24 inches
4. Construct transverse joints at each point where paver ends a day's work and resumes work at a subsequent time. Construct these joints [**using either "bulkhead" or "papered" method according to AI MS-22, for both "Ending a Lane" and "Resumption of Paving Operations."**] Compact joints as soon as hot-mix asphalt will bear roller weight without excessive displacement.
5. Compact asphalt at joints to a density within 2 percent of specified course density.

3.9 COMPACTION

A. General: Begin compaction as soon as placed hot-mix paving will bear roller weight without excessive displacement. Compact hot-mix paving with hot, hand tampers or with vibratory-plate compactors in areas inaccessible to rollers.

1. Complete compaction before mix temperature cools to 185 deg F

B. Breakdown Rolling: Complete breakdown or initial rolling immediately after rolling joints and outside edge. Examine surface immediately after breakdown rolling for indicated crown, grade, and smoothness. Correct laydown and rolling operations to comply with requirements.

C. Intermediate Rolling: Begin intermediate rolling immediately after breakdown rolling while hot-mix asphalt is still hot enough to achieve specified density. Continue rolling until hot-mix asphalt course has been uniformly compacted to the following density:

1. Average Density: 96 percent of reference laboratory density according to [**ASTM D 6927**] [**or**] [**AASHTO T 245**], but not less than 94 percent or greater than 100 percent.
2. Average Density: 92 percent of reference maximum theoretical density according to ASTM D 2041, but not less than 90 percent or greater than 96 percent.

D. Finish Rolling: Finish roll paved surfaces to remove roller marks while hot-mix asphalt is still warm.

E. Edge Shaping: While surface is being compacted and finished, trim edges of pavement to proper alignment. Bevel edges while asphalt is still hot; compact thoroughly.

F. Repairs: Remove paved areas that are defective or contaminated with foreign materials and replace with fresh, hot-mix asphalt. Compact by rolling to specified density and surface smoothness.

G. Protection: After final rolling, do not permit vehicular traffic on pavement until it has cooled and hardened.

H. Erect barricades to protect paving from traffic until mixture has cooled enough not to become marked.

3.10 ASPHALT CURBS

A. Construct hot-mix asphalt curbs over compacted pavement surfaces. Apply a light tack coat unless pavement surface is still tacky and free from dust. Spread mix at a minimum temperature of 250 deg F

1. Asphalt Mix: Same as pavement surface-course mix.

B. Place hot-mix asphalt to curb cross section indicated or, if not indicated, to local standard shapes, by machine or by hand in wood or metal forms. Tamp hand-placed materials and screed to smooth finish. Remove forms after hot-mix asphalt has cooled.

3.11 ASPHALT TRAFFIC-CALMING DEVICES

A. Construct hot-mix asphalt speed [**bumps**] [**humps**] [**cushions**] [**and**] [**tables**] over compacted pavement surfaces. Apply a tack coat unless pavement surface is still tacky and free from dust. Spread mix at a minimum temperature of 250 deg F

1. Tack Coat Application: Apply uniformly to surfaces of existing pavement at a rate of 0.05 to 0.15 gal./sq. yd.
2. Asphalt Mix: Same as pavement surface-course mix.
3. Before installation, mill pavement that will be in contact with bottom of traffic-calming device. Mill to a depth of 1 inch from top of pavement to a clean, rough profile.

B. Place and compact hot-mix asphalt to cross section indicated, by machine or by hand in wood or metal forms. Tamp hand-placed materials and screed to smooth finish. Remove forms after hot-mix asphalt has cooled.

3.12 INSTALLATION TOLERANCES

A. Pavement Thickness: Compact each course to produce the thickness indicated within the following tolerances:

1. Base Course: Plus or minus 1/2 inch
2. Surface Course: Plus 1/4 inch no minus.

B. Pavement Surface Smoothness: Compact each course to produce a surface smoothness within the following tolerances as determined by using a 10-foot straightedge applied transversely or longitudinally to paved areas:

1. Base Course: [**1/4 inch**]
2. Surface Course: [**1/8 inch**]
3. Crowned Surfaces: Test with crowned template centered and at right angle to crown. Maximum allowable variance from template is 1/4 inch

C. Asphalt Traffic-Calming Devices: Compact and form asphalt to produce the contour indicated and within a tolerance of plus or minus 1/8 inch of height indicated above pavement surface.

3.13 SURFACE TREATMENTS

A. Fog Seals: Apply fog seal at a rate of 0.10 to 0.15 gal./sq. yd. to existing asphalt pavement and allow to cure. With fine sand, lightly dust areas receiving excess fog seal.

B. Slurry Seals: Apply slurry coat in a uniform thickness according to ASTM D 3910 and allow to cure.

1. Roll slurry seal to remove ridges and provide a uniform, smooth surface.

3.14 FIELD QUALITY CONTROL

A. Testing Agency: **Owner will engage** a qualified testing agency to perform tests and inspections.

B. Thickness: In-place compacted thickness of hot-mix asphalt courses will be determined according to ASTM D 3549.

C. Surface Smoothness: Finished surface of each hot-mix asphalt course will be tested for compliance with smoothness tolerances.

D. Asphalt Traffic-Calming Devices: Finished height of traffic-calming devices above pavement will be measured for compliance with tolerances.

E. In-Place Density: Testing agency will take samples of uncompacted paving mixtures and compacted pavement according to [**ASTM D 979**] [**or**] [**AASHTO T 168**].

1. Reference maximum theoretical density will be determined by averaging results from four samples of hot-mix asphalt-paving mixture delivered daily to site, prepared according to ASTM D 2041, and compacted according to job-mix specifications.
2. In-place density of compacted pavement will be determined by testing core samples according to ASTM D 1188 or ASTM D 2726.
   a. One core sample will be taken for every 1000 sq. yd. or less of installed pavement, with no fewer than three cores taken.
   b. Field density of in-place compacted pavement may also be determined by nuclear method according to ASTM D 2950 and correlated with ASTM D 1188 or ASTM D 2726.

F. Replace and compact hot-mix asphalt where core tests were taken.

G. Remove and replace or install additional hot-mix asphalt where test results or measurements indicate that it does not comply with specified requirements.

3.15 WASTE HANDLING

A. General: Handle asphalt-paving waste according to approved waste management plan required in Section 017419 "Construction Waste Management and Disposal."

END OF SECTION

SECTION 321313 - CONCRETE PAVING

PART 1 - GENERAL

1.1 RELATED DOCUMENTS

A. Drawings and general provisions of the Contract, including General and Supplementary Conditions and Division 01 Specification Sections, apply to this Section.

1.2 SUMMARY

A. Section Includes:

1. Driveways.
2. Roadways.
3. Parking lots.
4. Curbs and gutters.
5. Walks.

B. Related Sections:
1. Section 321373 "Concrete Paving Joint Sealants" for joint sealants in expansion and contraction joints within concrete paving and in joints between concrete paving and asphalt paving or adjacent construction.

1.3 DEFINITIONS

A. Cementitious Materials: Portland cement alone or in combination with one or more of blended hydraulic cement, fly ash and other pozzolans, and ground granulated blast-furnace slag.

1.4 ACTION SUBMITTALS

A. Product Data: For each type of product indicated.

B. Shop Drawings: Indicate pavement markings, lane separations, and defined parking spaces. Indicate, with international symbol of accessibility, spaces allocated for people with disabilities.

C. Samples for Initial Selection: For each type of product, ingredient, or admixture requiring color selection.

D. Samples for Verification: For each type of product or exposed finish, prepared as Samples of size indicated below:

1. Exposed Aggregate: [**10-lb**] Sample of each mix.
2. Wheel Stops: [**6 inches long**] showing cross section; with fasteners.
3. Preformed Traffic-Calming Devices: [**6 inches long**] showing cross section; with fasteners.

E. Other Action Submittals:

1. Design Mixtures: For each concrete paving mixture. Include alternate design mixtures when characteristics of materials, Project conditions, weather, test results, or other circumstances warrant adjustments.

1.5 INFORMATIONAL SUBMITTALS

A. Qualification Data: For qualified [**Installer of detectable warnings**] [**ready-mix concrete manufacturer**] [**and**] [**testing agency**].

B. Material Certificates: For the following, from manufacturer:

1. Cementitious materials.
2. Steel reinforcement and reinforcement accessories.
3. Fiber reinforcement.
4. Admixtures.
5. Curing compounds.
6. Applied finish materials.
7. Bonding agent or epoxy adhesive.
8. Joint fillers.

C. Material Test Reports: For each of the following:

1. Aggregates.[**Include service-record data indicating absence of deleterious expansion of concrete due to alkali-aggregate reactivity.**]

D. Field quality-control reports.

1.6 QUALITY ASSURANCE

A. Detectable Warning Installer Qualifications: An employer of workers trained and approved by manufacturer of stamped concrete paving systems.

B. Ready-Mix-Concrete Manufacturer Qualifications: A firm experienced in manufacturing ready-mixed concrete products and that complies with ASTM C 94/C 94M requirements for production facilities and equipment.

1. Manufacturer certified according to NRMCA's "Certification of Ready Mixed Concrete Production Facilities" (Quality Control Manual - Section 3, "Plant Certification Checklist").

C. Testing Agency Qualifications: Qualified according to ASTM C 1077 and ASTM E 329 for testing indicated.

1. Personnel conducting field tests shall be qualified as ACI Concrete Field Testing Technician, Grade 1, according to ACI CP-1 or an equivalent certification program.

D. Concrete Testing Service: Engage a qualified testing agency to perform material evaluation tests and to design concrete mixtures.

E. ACI Publications: Comply with ACI 301 unless otherwise indicated.

F. Mockups: Build mockups to verify selections made under sample submittals and to demonstrate aesthetic effects and set quality standards for materials and execution.

1. Build mockups of full-thickness sections of concrete paving to demonstrate typical joints; surface finish, texture, and color; curing; and standard of workmanship.
2. Build mockups of concrete paving in the location and of the size indicated or, if not indicated, build mockups where directed by Architect and not less than [**96 inches by 96 inches**].[**Include full-size detectable warning.**]
3. Approval of mockups does not constitute approval of deviations from the Contract Documents contained in mockups unless Architect specifically approves such deviations in writing.
4. Approved mockups may become part of the completed Work if undisturbed at time of Substantial Completion.

G. Preinstallation Conference:

1. Review methods and procedures related to concrete paving, including but not limited to, the following:

   a. Concrete mixture design.
   b. Quality control of concrete materials and concrete paving construction practices.

2. Require representatives of each entity directly concerned with concrete paving to attend, including the following:

   a. Contractor's superintendent.
   b. Independent testing agency responsible for concrete design mixtures.
   c. Ready-mix concrete manufacturer.
   d. Concrete paving subcontractor.
   e. Manufacturer's representative of stamped concrete paving system used for detectable warnings.

1.7 PROJECT CONDITIONS

A. Traffic Control: Maintain access for vehicular and pedestrian traffic as required for other construction activities.

B. Pavement-Marking Paint: Proceed with pavement marking only on clean, dry surfaces and at a minimum ambient or surface temperature of [**40 deg F for oil-based materials**] [**55 deg F for water-based materials**], and not exceeding 95 deg F.

PART 2 - PRODUCTS

2.1 FORMS

A. Form Materials: Plywood, metal, metal-framed plywood, or other approved panel-type materials to provide full-depth, continuous, straight, and smooth exposed surfaces.

1. Use flexible or uniformly curved forms for curves with a radius of 100 feet or less.[**Do not use notched and bent forms.**]

B. Form-Release Agent: Commercially formulated form-release agent that will not bond with, stain, or adversely affect concrete surfaces and that will not impair subsequent treatments of concrete surfaces.

2.2 STEEL REINFORCEMENT

A. Recycled Content: Postconsumer recycled content plus one-half of preconsumer recycled content not less than [**25**] percent.

B. Plain-Steel Welded Wire Reinforcement: ASTM A 185/A 185M, fabricated from [**galvanized-**]steel wire into flat sheets.

C. Deformed-Steel Welded Wire Reinforcement: ASTM A 497/A 497M, flat sheet.

D. Epoxy-Coated Welded Wire Reinforcement: ASTM A 884/A 884M, Class A, plain steel.

E. Reinforcing Bars: ASTM A 615/A 615M, Grade 60; deformed.

F. Galvanized Reinforcing Bars: ASTM A 767/A 767M, Class II zinc coated, hot-dip galvanized after fabrication and bending; with ASTM A 615/A 615M, Grade 60 deformed bars.

G. Epoxy-Coated Reinforcing Bars: ASTM A 775/A 775M or ASTM A 934/A 934M; with ASTM A 615/A 615M, Grade 60 deformed bars.

H. Steel Bar Mats: ASTM A 184/A 184M; with ASTM A 615/A 615M, Grade 60 deformed bars; assembled with clips.

I. Plain-Steel Wire: ASTM A 82/A 82M, [**galvanized**].

J. Deformed-Steel Wire: ASTM A 496/A 496M.

K. Epoxy-Coated-Steel Wire: ASTM A 884/A 884M, Class A coated, [**plain**] .

L. Joint Dowel Bars: ASTM A 615/A 615M, Grade 60 plain-steel bars[**; zinc coated (galvanized) after fabrication according to ASTM A 767/A 767M, Class I coating**]. Cut bars true to length with ends square and free of burrs.

M. Epoxy-Coated, Joint Dowel Bars: ASTM A 775/A 775M; with ASTM A 615/A 615M, Grade 60, plain-steel bars.

N. Tie Bars: ASTM A 615/A 615M, Grade 60, deformed.

O. Hook Bolts: ASTM A 307, Grade A, internally and externally threaded. Design hook-bolt joint assembly to hold coupling against paving form and in position during concreting operations, and to permit removal without damage to concrete or hook bolt.

P. Bar Supports: Bolsters, chairs, spacers, and other devices for spacing, supporting, and fastening reinforcing bars, welded wire reinforcement, and dowels in place. Manufacture bar supports according to CRSI's "Manual of Standard Practice" from steel wire, plastic, or precast concrete of greater compressive strength than concrete specified, and as follows:

1. Equip wire bar supports with sand plates or horizontal runners where base material will not support chair legs.
2. For epoxy-coated reinforcement, use epoxy-coated or other dielectric-polymer-coated wire bar supports.

Q. Epoxy Repair Coating: Liquid, two-part, epoxy repair coating, compatible with epoxy coating on reinforcement.

R. Zinc Repair Material: ASTM A 780.

2.3 CONCRETE MATERIALS

A. Cementitious Material: Use the following cementitious materials, of same type, brand, and source throughout Project:

1. Portland Cement: ASTM C 150, [**gray**] [**white**] portland cement [**Type I**] [**Type II**] [**Type I/II**] [**Type III**] [**Type V**].[**Supplement with the following:**]

   a. Fly Ash: ASTM C 618, [**Class C**] [**or**] [**Class F**].
   b. Ground Granulated Blast-Furnace Slag: ASTM C 989, Grade 100 or 120.

2. Blended Hydraulic Cement: ASTM C 595, [**Type IS, portland blast-furnace slag**] [**Type IP, portland-pozzolan**] cement.

B. Normal-Weight Aggregates: ASTM C 33, [**Class 4S**] [**Class 4M**] [**Class 1N**] <**Insert class**>, uniformly graded. Provide aggregates from a single source[**with documented service-record data of at least 10 years' satisfactory service in similar paving applications and service conditions using similar aggregates and cementitious materials**].

1. Maximum Coarse-Aggregate Size: [**3/4 inch**] nominal.
2. Fine Aggregate: Free of materials with deleterious reactivity to alkali in cement.

C. Exposed Aggregate: Selected, hard, and durable; washed; free of materials with deleterious reactivity to cement or that cause staining; from a single source, with gap-graded coarse aggregate as follows:

1. Aggregate Sizes: [**1/2 to 3/4 inch**] nominal.
2. Aggregate Source, Shape, and Color:

D. Water: Potable and complying with ASTM C 94/C 94M.

E. Air-Entraining Admixture: ASTM C 260.

F. Chemical Admixtures: Admixtures certified by manufacturer to be compatible with other admixtures and to contain not more than 0.1 percent water-soluble chloride ions by mass of cementitious material.

1. Water-Reducing Admixture: ASTM C 494/C 494M, Type A.
2. Retarding Admixture: ASTM C 494/C 494M, Type B.
3. Water-Reducing and Retarding Admixture: ASTM C 494/C 494M, Type D.
4. High-Range, Water-Reducing Admixture: ASTM C 494/C 494M, Type F.
5. High-Range, Water-Reducing and Retarding Admixture: ASTM C 494/C 494M, Type G.
6. Plasticizing and Retarding Admixture: ASTM C 1017/C 1017M, Type II.

G. Color Pigment: ASTM C 979, synthetic mineral-oxide pigments or colored water-reducing admixtures; color stable,[**free of carbon black,**] nonfading, and resistant to lime and other alkalis.

1. Manufacturers: Subject to compliance with requirements, [**provide products by one of the following**]:

a. ChemMasters.
b. Davis Colors.
c. Dayton Superior Corporation.
d. Elementis Pigments.
e. Hoover Color Corporation.
f. Lambert Corporation.
g. LANXESS Corporation.
h. QC Construction Products.
i. Scofield, L. M. Company.
j. Solomon Colors, Inc.
k. Stampcrete International, Ltd.
l. SureCrete Design Products.

2. Color: [**As selected by Architect from manufacturer's full range**] .

2.4 FIBER REINFORCEMENT

A. Synthetic Fiber: [**Monofilament**] [**or**] [**fibrillated**] polypropylene fibers engineered and designed for use in concrete paving, complying with ASTM C 1116/C 1116M, Type III, [**1/2 to 1-1/2 inches**] long.

1. Products: Subject to compliance with requirements, [**provide one of the following**]:

a. Monofilament Fibers:

1) Axim Italcementi Group, Inc.; FIBRASOL II P.
2) Euclid Chemical Company (The), an RPM company; Fiberstrand 100, Fiberstrand 150.

3) FORTA Corporation; [**FORTA ECONO-MONO**] [**or**] [**FORTA Mighty-Mono**].
4) Grace, W. R. & Co. - Conn.; Grace MicroFiber.
5) Metalcrete Industries; Polystrand 1000.
6) QC Construction Products; QC FIBERS.

b. Fibrillated Fibers:

1) Axim Italcementi Group, Inc.; FIBRASOL F.
2) Euclid Chemical Company (The), an RPM company; Fiberstrand F.
3) FORTA Corporation; [**FORTA Econo-Net**] [**or**] [**FORTA Super-Net**].
4) Grace, W. R. & Co. - Conn.; Grace Fibers.
5) Propex Concrete Systems Corp.; Fibermesh 300.

2.5 CURING MATERIALS

A. Absorptive Cover: AASHTO M 182, [**Class 3, burlap cloth made from jute or kenaf, weighing approximately 9 oz./sq. yd. dry**] [**or**] [**cotton mats**].

B. Moisture-Retaining Cover: ASTM C 171, polyethylene film or white burlap-polyethylene sheet.

C. Water: Potable.

D. Evaporation Retarder: Waterborne, monomolecular, film forming, manufactured for application to fresh concrete.

1. Products: Subject to compliance with requirements,[**provide one of the following**]:

a. Axim Italcementi Group, Inc.; Caltexol CIMFILM.
b. BASF Construction Chemicals, LLC; Confilm.
c. ChemMasters; Spray-Film.
d. Conspec by Dayton Superior; Aquafilm.
e. Dayton Superior Corporation; Sure Film (J-74).
f. Edoco by Dayton Superior; BurkeFilm.
g. Euclid Chemical Company (The), an RPM company; Eucobar.
h. Kaufman Products, Inc.; VaporAid.
i. Lambert Corporation; LAMBCO Skin.
j. L&M Construction Chemicals, Inc.; E-CON.
k. Meadows, W. R., Inc.; EVAPRE.
l. Metalcrete Industries; Waterhold.
m. Nox-Crete Products Group; MONOFILM.
n. Sika Corporation, Inc.; SikaFilm.
o. SpecChem, LLC; Spec Film.
p. Symons by Dayton Superior; Finishing Aid.
q. TK Products, Division of Sierra Corporation; TK-2120 TRI-FILM.
r. Unitex; PRO-FILM.
s. Vexcon Chemicals Inc.; Certi-Vex EnvioAssist.

E. Clear, Waterborne, Membrane-Forming Curing Compound: ASTM C 309, Type 1, Class B, dissipating.

1. Products: Subject to compliance with requirements, [**provide one of the following**]:

   a. Anti-Hydro International, Inc.; A-H Curing Compound #2 DR WB.
   b. ChemMasters; Safe-Cure Clear.
   c. Conspec by Dayton Superior; [**D.O.T. Resin Cure**] [**DSSCC Clear Resin Cure**].
   d. Dayton Superior Corporation; Day-Chem Rez Cure (J-11-W).
   e. Edoco by Dayton Superior; [**DSSCC Clear Resin Cure**] [**Resin Emulsion Cure V.O.C. (Type I)**].
   f. Euclid Chemical Company (The), an RPM company; Kurez W VOX.
   g. Kaufman Products, Inc.; Thinfilm 420.
   h. Lambert Corporation; AQUA KURE - CLEAR.
   i. L&M Construction Chemicals, Inc.; L&M CURE R.
   j. Meadows, W. R., Inc.; 1100-CLEAR SERIES.
   k. Nox-Crete Products Group; Resin Cure E.
   l. SpecChem, LLC; PaveCure Rez.
   m. Symons by Dayton Superior; Resi-Chem Clear.
   n. Tamms Industries, Inc., Euclid Chemical Company (The); TAMMSCURE WB 30C.
   o. TK Products, Division of Sierra Corporation; [**TK-2519 WB**] [**TK-2519 DC WB**].
   p. Vexcon Chemicals Inc.; Certi-Vex Enviocure 100.

F. White, Waterborne, Membrane-Forming Curing Compound: ASTM C 309, Type 2, Class B, dissipating.

1. Products: Subject to compliance with requirements, [**provide one of the following**]:

   a. Anti-Hydro International, Inc.; A-H Curing Compound #2 WP WB.
   b. ChemMasters; Safe-Cure 2000.
   c. Conspec by Dayton Superior; [**D.O.T. Resin Cure White**] [**DSSCC White Resin Cure**].
   d. Dayton Superior Corporation; Day-Chem White Pigmented Cure (J-10-W).
   e. Edoco by Dayton Superior; Resin Emulsion Cure V.O.C. (Type II).
   f. Euclid Chemical Company (The), an RPM company; Kurez VOX White Pigmented.
   g. Kaufman Products, Inc.; Thinfilm 450.
   h. Lambert Corporation; AQUA KURE - WHITE.
   i. L&M Construction Chemicals, Inc.; L&M CURE R-2.
   j. Meadows, W. R., Inc.; 1100-WHITE SERIES.
   k. SpecChem, LLC; PaveCure Rez White.
   l. Symons by Dayton Superior; Resi-Chem White.
   m. Vexcon Chemicals Inc.; Certi-Vex Enviocure White 100.

2.6 RELATED MATERIALS

A. Joint Fillers: [**ASTM D 1751, asphalt-saturated cellulosic fiber**] [**or**] [**ASTM D 1752, cork or self-expanding cork**] in preformed strips.

B. Slip-Resistive Aggregate Finish: Factory-graded, packaged, rustproof, nonglazing, abrasive aggregate of fused aluminum-oxide granules or crushed emery aggregate containing not less than 50 percent aluminum oxide and not less than 20 percent ferric oxide; unaffected by freezing, moisture, and cleaning materials.

C. Bonding Agent: ASTM C 1059, Type II, non-redispersible, acrylic emulsion or styrene butadiene.

D. Epoxy Bonding Adhesive: ASTM C 881/C 881M, two-component epoxy resin capable of humid curing and bonding to damp surfaces; of class suitable for application temperature, of grade complying with requirements, and of the following types:

1. [**Types I and II, non-load bearing**] [**Types IV and V, load bearing**], for bonding hardened or freshly mixed concrete to hardened concrete.

E. Chemical Surface Retarder: Water-soluble, liquid, set retarder with color dye, for horizontal concrete surface application, capable of temporarily delaying final hardening of concrete to a depth of 1/8 to 1/4 inch.

1. Products: Subject to compliance with requirements, [**provide one of the following**]:

a. ChemMasters; Exposee.
b. Conspec by Dayton Superior; Delay S.
c. Dayton Superior Corporation; Sure Etch (J-73).
d. Edoco by Dayton Superior; True Etch Surface Retarder.
e. Euclid Chemical Company (The), an RPM company; Surface Retarder Formula S.
f. Kaufman Products, Inc.; Expose.
g. Meadows, W. R., Inc.; TOP-STOP.
h. Metalcrete Industries; Surftard.
i. Nox-Crete Products Group; CRETE-NOX TA.
j. Scofield, L. M. Company; LITHOTEX Top Surface Retarder.
k. Sika Corporation, Inc.; Rugasol-S.
l. SpecChem, LLC; Spec Etch.
m. TK Products, Division of Sierra Corporation; TK-6000 Concrete Surface Retarder.
n. Unitex; TOP-ETCH Surface Retarder.
o. Vexcon Chemicals Inc.; Certi-Vex Envioset.

F. Pigmented Mineral Dry-Shake Hardener: Factory-packaged, dry combination of portland cement, graded quartz aggregate, color pigments, and plasticizing admixture. Use color pigments that are finely ground, nonfading mineral oxides interground with cement.

1. Products: Subject to compliance with requirements,[**provide one of the following**]:

a. Anti-Hydro International, Inc.; A-H S-Q Hardener.
b. BASF Construction Chemicals, LLC; Mastercron.
c. ChemMasters; ConColor.
d. Conspec by Dayton Superior; Conshake 600 Colortone.
e. Dayton Superior Corporation; Quartz Tuff.
f. Euclid Chemical Company (The), an RPM company; Surflex.
g. Lambert Corporation; COLORHARD.
h. L&M Construction Chemicals, Inc.; QUARTZPLATE FF.

i. Metalcrete Industries; Floor Quartz.
j. Scofield, L. M. Company; LITHOCHROME Color Hardener.
k. Southern Color N.A., Inc.; Mosaics Color Hardener.
l. Stampcrete International, Ltd.; Color Hardener.
m. Symons by Dayton Superior; Hard Top.

2. Color [**As selected by Architect from manufacturer's full range**]

G. Rock Salt: Sodium chloride crystals, kiln dried, coarse gradation with 100 percent passing 3/8-inch sieve and 85 percent retained on a No. 8 sieve.

2.7 PAVEMENT MARKINGS

A. Pavement-Marking Paint: Alkyd-resin type, lead and chromate free, ready mixed, complying with AASHTO M 248, [**Type N**] [**Type F**] [**Type S**]; colors complying with FS TT-P-1952.

1. Color: [**As indicated**]

B. Pavement-Marking Paint: MPI #32 Alkyd Traffic Marking Paint.

1. Color: [**As indicated**]

C. Pavement-Marking Paint: Latex, waterborne emulsion, lead and chromate free, ready mixed, complying with FS TT-P-1952, Type II, with drying time of less than [**45**] minutes.

1. Color: [**As indicated**]

D. Pavement-Marking Paint: MPI #97 Latex Traffic Marking Paint.

1. Color: [**As indicated**]

E. Glass Beads: [**AASHTO M 247, Type 1**].

2.8 CONCRETE MIXTURES

A. Prepare design mixtures, proportioned according to ACI 301, for each type and strength of normal-weight concrete, and as determined by either laboratory trial mixtures or field experience.

1. Use a qualified independent testing agency for preparing and reporting proposed concrete design mixtures for the trial batch method.
2. When automatic machine placement is used, determine design mixtures and obtain laboratory test results that meet or exceed requirements.

B. Proportion mixtures to provide normal-weight concrete with the following properties:

1. Compressive Strength (28 Days): [**5000 psi**]
2. Maximum Water-Cementitious Materials Ratio at Point of Placement: [**0.44**] .
3. Slump Limit: [4 **inches**] , plus or minus 1 inch.

C. Add air-entraining admixture at manufacturer's prescribed rate to result in normal-weight concrete at point of placement having an air content as follows:

1. Air Content: [**6**] percent plus or minus 1.5 percent for 1-1/2-inch nominal maximum aggregate size.
2. Air Content: [**6**]] percent plus or minus 1.5 percent for 1-inch nominal maximum aggregate size.
3. Air Content: [**6**] percent plus or minus 1.5 percent for 3/4-inch nominal maximum aggregate size.

D. Limit water-soluble, chloride-ion content in hardened concrete to [**0.15**] percent by weight of cement.

E. Chemical Admixtures: Use admixtures according to manufacturer's written instructions.

1. Use [**plasticizing and retarding admixture**] in concrete as required for placement and workability.
2. Use water-reducing and retarding admixture when required by high temperatures, low humidity, or other adverse placement conditions.

F. Cementitious Materials:[**Limit percentage, by weight, of cementitious materials other than portland cement in concrete as follows:**]

1. Fly Ash or Pozzolan: 25 percent.
2. Ground Granulated Blast-Furnace Slag: 50 percent.
3. Combined Fly Ash or Pozzolan, and Ground Granulated Blast-Furnace Slag: 50 percent, with fly ash or pozzolan not exceeding 25 percent.

G. Synthetic Fiber: Uniformly disperse in concrete mixture at manufacturer's recommended rate, but not less than [**2.0 lb/cu. yd.**].

H. Color Pigment: Add color pigment to concrete mixture according to manufacturer's written instructions and to result in hardened concrete color consistent with approved mockup.

2.9 CONCRETE MIXING

A. Ready-Mixed Concrete: Measure, batch, and mix concrete materials and concrete according to ASTM C 94/C 94M[**and ASTM C 1116/C 1116M**]. Furnish batch certificates for each batch discharged and used in the Work.

1. When air temperature is between 85 and 90 deg F, reduce mixing and delivery time from 1-1/2 hours to 75 minutes; when air temperature is above 90 deg F, reduce mixing and delivery time to 60 minutes.

B. Project-Site Mixing: Measure, batch, and mix concrete materials and concrete according to ASTM C 94/C 94M. Mix concrete materials in appropriate drum-type batch machine mixer.

1. For concrete batches of 1 cu. yd. or smaller, continue mixing at least 1-1/2 minutes, but not more than 5 minutes after ingredients are in mixer, before any part of batch is released.

2. For concrete batches larger than 1 cu. yd., increase mixing time by 15 seconds for each additional 1 cu. yd..
3. Provide batch ticket for each batch discharged and used in the Work, indicating Project identification name and number, date, mixture type, mixing time, quantity, and amount of water added.

PART 3 - EXECUTION

3.1 EXAMINATION

A. Examine exposed subgrades and subbase surfaces for compliance with requirements for dimensional, grading, and elevation tolerances.

B. Proof-roll prepared subbase surface below [**concrete paving**] to identify soft pockets and areas of excess yielding.

1. Completely proof-roll subbase in one direction[**and repeat in perpendicular direction**]. Limit vehicle speed to 3 mph.
2. Proof-roll with a pneumatic-tired and loaded, 10-wheel, tandem-axle dump truck weighing not less than 15 tons.
3. Correct subbase with soft spots and areas of pumping or rutting exceeding depth of [**1/2 inch**] according to requirements in Section 312000 "Earth Moving."

C. Proceed with installation only after unsatisfactory conditions have been corrected.

3.2 PREPARATION

A. Remove loose material from compacted subbase surface immediately before placing concrete.

3.3 EDGE FORMS AND SCREED CONSTRUCTION

A. Set, brace, and secure edge forms, bulkheads, and intermediate screed guides to required lines, grades, and elevations. Install forms to allow continuous progress of work and so forms can remain in place at least 24 hours after concrete placement.

B. Clean forms after each use and coat with form-release agent to ensure separation from concrete without damage.

3.4 STEEL REINFORCEMENT

A. General: Comply with CRSI's "Manual of Standard Practice" for fabricating, placing, and supporting reinforcement.

B. Clean reinforcement of loose rust and mill scale, earth, ice, or other bond-reducing materials.

C. Arrange, space, and securely tie bars and bar supports to hold reinforcement in position during concrete placement. Maintain minimum cover to reinforcement.

D. Install welded wire reinforcement in lengths as long as practicable. Lap adjoining pieces at least one full mesh, and lace splices with wire. Offset laps of adjoining widths to prevent continuous laps in either direction.

E. Zinc-Coated Reinforcement: Use galvanized-steel wire ties to fasten zinc-coated reinforcement. Repair cut and damaged zinc coatings with zinc repair material.

F. Epoxy-Coated Reinforcement: Use epoxy-coated steel wire ties to fasten epoxy-coated reinforcement. Repair cut and damaged epoxy coatings with epoxy repair coating according to ASTM D 3963/D 3963M.

G. Install fabricated bar mats in lengths as long as practicable. Handle units to keep them flat and free of distortions. Straighten bends, kinks, and other irregularities, or replace units as required before placement. Set mats for a minimum 2-inch overlap of adjacent mats.

3.5 JOINTS

A. General: Form construction, isolation, and contraction joints and tool edges true to line, with faces perpendicular to surface plane of concrete. Construct transverse joints at right angles to centerline unless otherwise indicated.

1. When joining existing paving, place transverse joints to align with previously placed joints unless otherwise indicated.

B. Construction Joints: Set construction joints at side and end terminations of paving and at locations where paving operations are stopped for more than one-half hour unless paving terminates at isolation joints.

1. Continue steel reinforcement across construction joints unless otherwise indicated. Do not continue reinforcement through sides of paving strips unless otherwise indicated.
2. Provide tie bars at sides of paving strips where indicated.
3. Butt Joints: Use [**bonding agent**] [**epoxy bonding adhesive**] at joint locations where fresh concrete is placed against hardened or partially hardened concrete surfaces.
4. Keyed Joints: Provide preformed keyway-section forms or bulkhead forms with keys unless otherwise indicated. Embed keys at least 1-1/2 inches into concrete.
5. Doweled Joints: Install dowel bars and support assemblies at joints where indicated. Lubricate or coat with asphalt one-half of dowel length to prevent concrete bonding to one side of joint.

C. Isolation Joints: Form isolation joints of preformed joint-filler strips abutting concrete curbs, catch basins, manholes, inlets, structures, other fixed objects, and where indicated.

1. Locate expansion joints at intervals of [**50 feet**] unless otherwise indicated.
2. Extend joint fillers full width and depth of joint.
3. Terminate joint filler not less than 1/2 inch or more than 1 inch below finished surface if joint sealant is indicated.
4. Place top of joint filler flush with finished concrete surface if joint sealant is not indicated.
5. Furnish joint fillers in one-piece lengths. Where more than one length is required, lace or clip joint-filler sections together.

6. During concrete placement, protect top edge of joint filler with metal, plastic, or other temporary preformed cap. Remove protective cap after concrete has been placed on both sides of joint.

D. Contraction Joints: Form weakened-plane contraction joints, sectioning concrete into areas as indicated. Construct contraction joints for a depth equal to at least one-fourth of the concrete thickness, as follows[**, to match jointing of existing adjacent concrete paving**]:

1. Grooved Joints: Form contraction joints after initial floating by grooving and finishing each edge of joint with grooving tool to a [**1/4-inch**] [**3/8-inch**] radius. Repeat grooving of contraction joints after applying surface finishes.[**Eliminate grooving-tool marks on concrete surfaces.**]

   a. Tolerance: Ensure that grooved joints are within [**3 inches**] either way from centers of dowels.

2. Sawed Joints: Form contraction joints with power saws equipped with shatterproof abrasive or diamond-rimmed blades. Cut 1/8-inch- wide joints into concrete when cutting action will not tear, abrade, or otherwise damage surface and before developing random contraction cracks.

   a. Tolerance: Ensure that sawed joints are within [**3 inches**] either way from centers of dowels.

3. Doweled Contraction Joints: Install dowel bars and support assemblies at joints where indicated. Lubricate or coat with asphalt one-half of dowel length to prevent concrete bonding to one side of joint.

E. Edging: After initial floating, tool edges of paving, gutters, curbs, and joints in concrete with an edging tool to a [**1/4-inch**] radius. Repeat tooling of edges after applying surface finishes.[**Eliminate edging-tool marks on concrete surfaces.**]

3.6 CONCRETE PLACEMENT

A. Before placing concrete, inspect and complete formwork installation[**, steel reinforcement,**] and items to be embedded or cast-in.

B. Remove snow, ice, or frost from subbase surface[**and steel reinforcement**] before placing concrete. Do not place concrete on frozen surfaces.

C. Moisten subbase to provide a uniform dampened condition at time concrete is placed. Do not place concrete around manholes or other structures until they are at required finish elevation and alignment.

D. Comply with ACI 301 requirements for measuring, mixing, transporting, and placing concrete.

E. Do not add water to concrete during delivery or at Project site. Do not add water to fresh concrete after testing.

F. Deposit and spread concrete in a continuous operation between transverse joints. Do not push or drag concrete into place or use vibrators to move concrete into place.

G. Consolidate concrete according to ACI 301 by mechanical vibrating equipment supplemented by hand spading, rodding, or tamping.

1. Consolidate concrete along face of forms and adjacent to transverse joints with an internal vibrator. Keep vibrator away from joint assemblies[**, reinforcement,**] or side forms. Use only square-faced shovels for hand spreading and consolidation. Consolidate with care to prevent dislocating [**reinforcement**] [**dowels**] [**and**] joint devices.

H. Screed paving surface with a straightedge and strike off.

I. Commence initial floating using bull floats or darbies to impart an open-textured and uniform surface plane before excess moisture or bleed water appears on the surface. Do not further disturb concrete surfaces before beginning finishing operations or spreading surface treatments.

J. Curbs and Gutters: Use design mixture for automatic machine placement. Produce curbs and gutters to required cross section, lines, grades, finish, and jointing.

K. Slip-Form Paving: Use design mixture for automatic machine placement. Produce paving to required thickness, lines, grades, finish, and jointing.

1. Compact subbase and prepare subgrade of sufficient width to prevent displacement of slip-form paving machine during operations.

L. Cold-Weather Placement: Protect concrete work from physical damage or reduced strength that could be caused by frost, freezing, or low temperatures. Comply with ACI 306.1 and the following:

1. When air temperature has fallen to or is expected to fall below 40 deg F , uniformly heat water and aggregates before mixing to obtain a concrete mixture temperature of not less than 50 deg F and not more than 80 deg F at point of placement.
2. Do not use frozen materials or materials containing ice or snow.
3. Do not use calcium chloride, salt, or other materials containing antifreeze agents or chemical accelerators unless otherwise specified and approved in design mixtures.

M. Hot-Weather Placement: Comply with ACI 301 and as follows when hot-weather conditions exist:

1. Cool ingredients before mixing to maintain concrete temperature below 90 deg F at time of placement. Chilled mixing water or chopped ice may be used to control temperature, provided water equivalent of ice is calculated in total amount of mixing water. Using liquid nitrogen to cool concrete is Contractor's option.
2. Cover steel reinforcement with water-soaked burlap so steel temperature will not exceed ambient air temperature immediately before embedding in concrete.
3. Fog-spray forms[**, steel reinforcement,**] and subgrade just before placing concrete. Keep subgrade moisture uniform without standing water, soft spots, or dry areas.

3.7 FLOAT FINISHING

A. General: Do not add water to concrete surfaces during finishing operations.

B. Float Finish: Begin the second floating operation when bleed-water sheen has disappeared and concrete surface has stiffened sufficiently to permit operations. Float surface with power-driven floats or by hand floating if area is small or inaccessible to power units. Finish surfaces to true planes. Cut down high spots and fill low spots. Refloat surface immediately to uniform granular texture.

1. Burlap Finish: Drag a seamless strip of damp burlap across float-finished concrete, perpendicular to line of traffic, to provide a uniform, gritty texture.
2. Medium-to-Fine-Textured Broom Finish: Draw a soft-bristle broom across float-finished concrete surface perpendicular to line of traffic to provide a uniform, fine-line texture.
3. Medium-to-Coarse-Textured Broom Finish: Provide a coarse finish by striating float-finished concrete surface 1/16 to 1/8 inch deep with a stiff-bristled broom, perpendicular to line of traffic.

3.8 SPECIAL FINISHES

A. Monolithic Exposed-Aggregate Finish: Expose coarse aggregate in paving surface as follows:

1. Immediately after float finishing, spray-apply chemical surface retarder to paving according to manufacturer's written instructions.
2. Cover paving surface with plastic sheeting, sealing laps with tape, and remove when ready to continue finishing operations.
3. Without dislodging aggregate, remove mortar concealing the aggregate by lightly brushing surface with a stiff, nylon-bristle broom. Do not expose more than one-third of the average diameter of the aggregate and not more than one-half of the diameter of the smallest aggregate.
4. Fine-spray surface with water and brush. Repeat cycle of water flushing and brushing until cement film is removed from aggregate surfaces to depth required.

B. Seeded Exposed-Aggregate Finish: Immediately after initial floating, spread a single layer of aggregate uniformly on paving surface. Tamp aggregate into plastic concrete and float finish to entirely embed aggregate with mortar cover of 1/16 inch.

1. Spray-apply chemical surface retarder to paving according to manufacturer's written instructions.
2. Cover paving surface with plastic sheeting, sealing laps with tape, and remove sheeting when ready to continue finishing operations.
3. Without dislodging aggregate, remove mortar concealing the aggregate by lightly brushing surface with a stiff, nylon-bristle broom. Do not expose more than one-third of the average diameter of the aggregate and not more than one-half of the diameter of the smallest aggregate.
4. Fine-spray surface with water and brush. Repeat cycle of water flushing and brushing until cement film is removed from aggregate surfaces to depth required.

C. Slip-Resistive Aggregate Finish: Before final floating, spread slip-resistive aggregate finish on paving surface according to manufacturer's written instructions and as follows:

1. Uniformly spread [**40 lb/100 sq. ft.**] of dampened, slip-resistive aggregate over paving surface in two applications. Tamp aggregate flush with surface using a steel trowel, but do not force below surface.
2. Uniformly distribute approximately two-thirds of slip-resistive aggregate over paving surface with mechanical spreader, allow to absorb moisture, and embed by power floating. Follow power floating with a second slip-resistive aggregate application, uniformly distributing remainder of material at right angles to first application to ensure uniform coverage, and embed by power floating.
3. Cure concrete with curing compound recommended by slip-resistive aggregate manufacturer. Apply curing compound immediately after final finishing.
4. After curing, lightly work surface with a steel wire brush or abrasive stone and water to expose nonslip aggregate.

D. Rock-Salt Finish: After initial [**floating**] [**troweling**] [**brooming**], uniformly spread rock salt over paving surface at the rate of 5 lb/100 sq. ft..

1. Embed rock salt into plastic concrete with [**magnesium float**] .
2. Cover paving surface with 1-mil- thick polyethylene sheet and remove sheet when concrete has hardened and seven-day curing period has elapsed.
3. After seven-day curing period, saturate concrete with water and broom-sweep surface to dissolve remaining rock salt, thereby leaving pits and holes.

E. Pigmented Mineral Dry-Shake Hardener Finish: After initial floating, apply dry-shake materials to paving surface according to manufacturer's written instructions and as follows:

1. Uniformly spread dry-shake hardener at a rate of [**100 lb/100 sq. ft.**], unless greater amount is recommended by manufacturer to match paving color required.
2. Uniformly distribute approximately two-thirds of dry-shake hardener over the concrete surface with mechanical spreader; allow hardener to absorb moisture and embed it by power floating. Follow power floating with a second application of pigmented mineral dry-shake hardener, uniformly distributing remainder of material at right angles to first application to ensure uniform color, and embed hardener by final power floating.
3. After final power floating, apply a hand-trowel finish followed by a broom finish.
4. Cure concrete with curing compound recommended by dry-shake hardener manufacturer. Apply curing compound immediately after final finishing.

3.9 CONCRETE PROTECTION AND CURING

A. General: Protect freshly placed concrete from premature drying and excessive cold or hot temperatures.

B. Comply with ACI 306.1 for cold-weather protection.

C. Evaporation Retarder: Apply evaporation retarder to concrete surfaces if hot, dry, or windy conditions cause moisture loss approaching 0.2 lb/sq. ft. x h before and during finishing operations. Apply according to manufacturer's written instructions after placing, screeding, and bull floating or darbying concrete but before float finishing.

D. Begin curing after finishing concrete but not before free water has disappeared from concrete surface.

E. Curing Methods: Cure concrete by [**curing compound**] [**or**] [**a combination of these**] as follows:

1. Moisture Curing: Keep surfaces continuously moist for not less than seven days with the following materials:

   a. Water.
   b. Continuous water-fog spray.
   c. Absorptive cover, water saturated and kept continuously wet. Cover concrete surfaces and edges with 12-inch lap over adjacent absorptive covers.

2. Moisture-Retaining-Cover Curing: Cover concrete surfaces with moisture-retaining cover, placed in widest practicable width, with sides and ends lapped at least 12 inches and sealed by waterproof tape or adhesive. Immediately repair any holes or tears occurring during installation or curing period using cover material and waterproof tape.
3. Curing Compound: Apply uniformly in continuous operation by power spray or roller according to manufacturer's written instructions. Recoat areas that have been subjected to heavy rainfall within three hours after initial application. Maintain continuity of coating, and repair damage during curing period.

3.10 PAVING TOLERANCES

A. Comply with tolerances in ACI 117 and as follows:

1. Elevation: 3/4 inch.
2. Thickness: Plus 3/8 inch, minus 1/4 inch.
3. Surface: Gap below 10-foot- long, unleveled straightedge not to exceed 1/2 inch.
4. Alignment of Tie-Bar End Relative to Line Perpendicular to Paving Edge: 1/2 inch per 12 inches of tie bar.
5. Lateral Alignment and Spacing of Dowels: 1 inch.
6. Vertical Alignment of Dowels: 1/4 inch
7. Alignment of Dowel-Bar End Relative to Line Perpendicular to Paving Edge: 1/4 inch per 12 inches of dowel.
8. Joint Spacing: 3 inches.
9. Contraction Joint Depth: Plus 1/4 inch, no minus.
10. Joint Width: Plus 1/8 inch, no minus.

3.11 PAVEMENT MARKING

A. Do not apply pavement-marking paint until layout, colors, and placement have been verified with Architect.

B. Allow concrete paving to cure for a minimum of [**28**] days and be dry before starting pavement marking.

C. Sweep and clean surface to eliminate loose material and dust.

D. Apply paint with mechanical equipment to produce markings of dimensions indicated with uniform, straight edges. Apply at manufacturer's recommended rates to provide a minimum wet film thickness of 15 mils.

1. Apply graphic symbols and lettering with paint-resistant, die-cut stencils, firmly secured to concrete surface. Mask an extended area beyond edges of each stencil to prevent paint application beyond stencil. Apply paint so that it cannot run beneath stencil.
2. Broadcast glass beads uniformly into wet markings at a rate of 6 lb/gal.

3.12 WHEEL STOPS

A. Install wheel stops in bed of adhesive applied as recommended by manufacturer.

B. Securely attach wheel stops to paving with not less than two [**galvanized-**]steel dowels located at one-quarter to one-third points. Install dowels in drilled holes in the paving and bond dowels to wheel stop. Recess head of dowel beneath top of wheel stop.

3.13 PREFORMED TRAFFIC-CALMING DEVICES

A. Install preformed speed [**bumps**] in bed of adhesive applied as recommended by manufacturer for heavy traffic.

B. Securely attach preformed speed [**bumps**] to paving with hardware spaced as recommended by manufacturer for heavy traffic. Recess head of hardware beneath top surface.

3.14 FIELD QUALITY CONTROL

A. Testing Agency: [**Owner will engage**] a qualified testing agency to perform tests and inspections.

B. Testing Services: Testing of composite samples of fresh concrete obtained according to ASTM C 172 shall be performed according to the following requirements:

1. Testing Frequency: Obtain at least one composite sample for each [**100 cu. yd.**] or [**5000 sq. ft.**] or fraction thereof of each concrete mixture placed each day.

   a. When frequency of testing will provide fewer than five compressive-strength tests for each concrete mixture, testing shall be conducted from at least five randomly selected batches or from each batch if fewer than five are used.

2. Slump: ASTM C 143/C 143M; one test at point of placement for each composite sample, but not less than one test for each day's pour of each concrete mixture. Perform additional tests when concrete consistency appears to change.
3. Air Content: ASTM C 231, pressure method; one test for each composite sample, but not less than one test for each day's pour of each concrete mixture.
4. Concrete Temperature: ASTM C 1064/C 1064M; one test hourly when air temperature is 40 deg F and below and when it is 80 deg F and above, and one test for each composite sample.
5. Compression Test Specimens: ASTM C 31/C 31M; cast and laboratory cure one set of three standard cylinder specimens for each composite sample.

6. Compressive-Strength Tests: ASTM C 39/C 39M; test one specimen at seven days and two specimens at 28 days.

   a. A compressive-strength test shall be the average compressive strength from two specimens obtained from same composite sample and tested at 28 days.

C. Strength of each concrete mixture will be satisfactory if average of any three consecutive compressive-strength tests equals or exceeds specified compressive strength and no compressive-strength test value falls below specified compressive strength by more than 500 psi.

D. Test results shall be reported in writing to Architect, concrete manufacturer, and Contractor within 48 hours of testing. Reports of compressive-strength tests shall contain Project identification name and number, date of concrete placement, name of concrete testing and inspecting agency, location of concrete batch in Work, design compressive strength at 28 days, concrete mixture proportions and materials, compressive breaking strength, and type of break for both 7- and 28-day tests.

E. Nondestructive Testing: Impact hammer, sonoscope, or other nondestructive device may be permitted by Architect but will not be used as sole basis for approval or rejection of concrete.

F. Additional Tests: Testing and inspecting agency shall make additional tests of concrete when test results indicate that slump, air entrainment, compressive strengths, or other requirements have not been met, as directed by Architect.

G. Concrete paving will be considered defective if it does not pass tests and inspections.

H. Additional testing and inspecting, at Contractor's expense, will be performed to determine compliance of replaced or additional work with specified requirements.

I. Prepare test and inspection reports.

3.15 REPAIRS AND PROTECTION

A. Remove and replace concrete paving that is broken, damaged, or defective or that does not comply with requirements in this Section. Remove work in complete sections from joint to joint unless otherwise approved by Architect.

B. Drill test cores, where directed by Architect, when necessary to determine magnitude of cracks or defective areas. Fill drilled core holes in satisfactory paving areas with portland cement concrete bonded to paving with epoxy adhesive.

C. Protect concrete paving from damage. Exclude traffic from paving for at least 14 days after placement. When construction traffic is permitted, maintain paving as clean as possible by removing surface stains and spillage of materials as they occur.

D. Maintain concrete paving free of stains, discoloration, dirt, and other foreign material. Sweep paving not more than two days before date scheduled for Substantial Completion inspections.

END OF SECTION 321313

SECTION 321373 - CONCRETE PAVING JOINT SEALANTS

PART 1 - GENERAL

1.1 RELATED DOCUMENTS

A. Drawings and general provisions of the Contract, including General and Supplementary Conditions and Division 01 Specification Sections, apply to this Section.

1.2 SUMMARY

A. Section Includes:

1. Cold-applied joint sealants.
2. Hot-applied joint sealants.
3. Cold-applied, fuel-resistant joint sealants.
4. Hot-applied, fuel-resistant joint sealants.
5. Joint-sealant backer materials.
6. Primers.

B. Related Requirements:

1. Section 079200 "Joint Sealants" for sealing nontraffic and traffic joints in locations not specified in this Section.

1.3 PREINSTALLATION MEETINGS

A. Preinstallation Conference: Conduct conference at [**Millville / North Logan**].

1.4 ACTION SUBMITTALS

A. Product Data: For each type of product.

B. Samples for Verification: For each kind and color of joint sealant required, provide Samples with joint sealants in 1/2-inch- wide joints formed between two 6-inch- long strips of material matching the appearance of exposed surfaces adjacent to joint sealants.

C. Paving-Joint-Sealant Schedule: Include the following information:

1. Joint-sealant application, joint location, and designation.
2. Joint-sealant manufacturer and product name.
3. Joint-sealant formulation.
4. Joint-sealant color.

1.5 INFORMATIONAL SUBMITTALS

A. Qualification Data: For [**Installer**] [**testing agency**].

B. Product Certificates: For each type of joint sealant and accessory.

1.6 QUALITY ASSURANCE

A. Installer Qualifications: An entity that employs installers and supervisors who are trained and approved by manufacturer.

B. Product Testing: Test joint sealants using a qualified testing agency.

1.7 FIELD CONDITIONS

A. Do not proceed with installation of joint sealants under the following conditions:

1. When ambient and substrate temperature conditions are outside limits permitted by joint-sealant manufacturer[**or are below 40 deg F**].
2. When joint substrates are wet.
3. Where joint widths are less than those allowed by joint-sealant manufacturer for applications indicated.
4. Where contaminants capable of interfering with adhesion have not yet been removed from joint substrates.

PART 2 - PRODUCTS

2.1 MATERIALS, GENERAL

A. Compatibility: Provide joint sealants, backing materials, and other related materials that are compatible with one another and with joint substrates under conditions of service and application, as demonstrated by joint-sealant manufacturer, based on testing and field experience.

2.2 COLD-APPLIED JOINT SEALANTS

A. Single-Component, Nonsag, Silicone Joint Sealant: ASTM D 5893/D 5893M, Type NS.

1. Products: Subject to compliance with requirements, [**provide one of the following**]:

a. Crafco Inc; RoadSaver Silicone.
b. Dow Corning Corporation; 888.
c. Pecora Corporation; 301 NS.

B. Single-Component, Self-Leveling, Silicone Joint Sealant: ASTM D 5893/D 5893M, Type SL.

1. Products: Subject to compliance with requirements, [**provide one of the following**]:

a. Crafco Inc; RoadSaver Silicone SL.
b. Dow Corning Corporation; 890-SL.
c. Pecora Corporation; 300 SL.

C. Multicomponent, Nonsag, Urethane, Elastomeric Joint Sealant: ASTM C 920, Type M, Grade NS, Class 25, for Use T.

1. Products: Subject to compliance with requirements, [**provide one of the following**]:

a. Meadows, W.R.,Inc; Pourthane NS.

D. Single Component, Pourable, Urethane, Elastomeric Joint Sealant: ASTM C 920, Type S, Grade P, Class 25, for Use T.

1. Products: Subject to compliance with requirements, [**provide one of the following**]:

a. Meadows, W.R.,Inc; Pourthane SL.

E. Multicomponent, Pourable, Urethane, Elastomeric Joint Sealant: ASTM C 920, Type M, Grade P, Class 25, for Use T.

1. Products: Subject to compliance with requirements, [**provide one of the following**]:

a. Pecora Corporation; [**Dynatred**] [**Dynatrol II-SG**] [**Urexpan NR-200**].

2.3 HOT-APPLIED JOINT SEALANTS

A. Hot-Applied, Single-Component Joint Sealant: ASTM D 6690, Type I.

1. Products: Subject to compliance with requirements, [**provide one of the following**]:

a. Crafco Inc; [**Asphalt Rubber Plus**] [**Asphalt Rubber Plus Type 2**] [**RoadSaver 203**] [**RoadSaver 211**] [**RoadSaver 515**].
b. Meadows, W.R.,Inc; [**Sealtight 1190**] [**Sealtight 164**].
c. Right Pointe.

B. Hot-Applied, Single-Component Joint Sealant: ASTM D 6690, Type I or Type II.

1. Products: Subject to compliance with requirements, [**provide one of the following**]:

a. Crafco Inc; [**RoadSaver 201**] [**RoadSaver 220**] [**RoadSaver 221**] [**RoadSaver 534**].
b. Right Pointe; [**JTS 3405 Parking Lot Sealant 007**] [**JTS 3405 Rubber 009**].

C. Hot-Applied, Single-Component Joint Sealant: ASTM D 6690, Type I, II, or III.

1. Products: Subject to compliance with requirements, [**provide one of the following**]:

a. Crafco Inc; RoadSaver 222.
b. Meadows, W.R.,Inc; Sealtight 3405.

c. Right Pointe; [**JTS 3405 Regular 003**] [**JTS 3405 Rubber 009**].

D. Hot-Applied, Single-Component Joint Sealant: ASTM D 6690, Type IV.

1. Products: Subject to compliance with requirements, [**provide one of the following**]:

a. Crafco Inc; RoadSaver 231.
b. Meadows, W.R.,Inc; Sealtight 3405M.

2.4 COLD-APPLIED, FUEL-RESISTANT JOINT SEALANTS

A. Fuel-Resistant, Single-Component, Pourable, Modified-Urethane, Elastomeric Joint Sealant: ASTM C 920, Type S, Grade P, Class 25, for Use T.

1. Products: Subject to compliance with requirements, [**provide one of the following**]:

a. BASF Building Systems; Sonomeric 1.

B. Fuel-Resistant, Multicomponent, Pourable, Modified-Urethane, Elastomeric Joint Sealant: ASTM C 920, Type M, Grade P, Class 12-1/2 or 25, for Use T.

1. Products: Subject to compliance with requirements, [**provide one of the following**]:

a. Meadows, W.R.,Inc; Sealtight Gardox.
b. Pecora Corporation; Urexpan NR-300.

2.5 HOT-APPLIED, FUEL-RESISTANT JOINT SEALANTS

A. Hot-Applied, Fuel-Resistant, Single-Component Joint Sealants: ASTM D 7116, Type I or Type II.

1. Products: Subject to compliance with requirements, [**provide one of the following**]:

a. Crafco Inc; [**Superseal 1614A**] [**Superseal 444/777**].

B. Hot-Applied, Fuel-Resistant, Single-Component Joint Sealants: ASTM D 7116, Type III.

1. Products: Subject to compliance with requirements, [**provide one of the following**]:

a. Crafco Inc; Superseal Low-Mod.

2.6 JOINT-SEALANT BACKER MATERIALS

A. Joint-Sealant Backer Materials: Nonstaining; compatible with joint substrates, sealants, primers, and other joint fillers; and approved for applications indicated by joint-sealant manufacturer, based on field experience and laboratory testing.

B. Round Backer Rods for Cold- and Hot-Applied Joint Sealants: ASTM D 5249, Type 1, of diameter and density required to control sealant depth and prevent bottom-side adhesion of sealant.

C. Round Backer Rods for Cold-Applied Joint Sealants: ASTM D 5249, Type 3, of diameter and density required to control joint-sealant depth and prevent bottom-side adhesion of sealant.

D. Backer Strips for Cold- and Hot-Applied Joint Sealants: ASTM D 5249; Type 2; of thickness and width required to control joint-sealant depth, prevent bottom-side adhesion of sealant, and fill remainder of joint opening under sealant.

2.7 PRIMERS

A. Primers: Product recommended by joint-sealant manufacturer where required for adhesion of sealant to joint substrates indicated.

PART 3 - EXECUTION

3.1 EXAMINATION

A. Examine joints to receive joint sealants, with Installer present, for compliance with requirements for joint configuration, installation tolerances, and other conditions affecting joint-sealant performance.

B. Proceed with installation only after unsatisfactory conditions have been corrected.

3.2 PREPARATION

A. Surface Cleaning of Joints: Before installing joint sealants, clean out joints immediately to comply with joint-sealant manufacturer's written instructions.

1. Remove all foreign material from joint substrates that could interfere with adhesion of joint sealant, including dust, old joint sealants, oil, grease, waterproofing, water repellents, water, surface dirt, and frost.

B. Joint Priming: Prime joint substrates where indicated or where recommended in writing by joint-sealant manufacturer, based on preconstruction joint-sealant-substrate tests or prior experience. Apply primer to comply with joint-sealant manufacturer's written instructions. Confine primers to areas of joint-sealant bond; do not allow spillage or migration onto adjoining surfaces.

3.3 INSTALLATION OF JOINT SEALANTS

A. Comply with joint-sealant manufacturer's written installation instructions for products and applications indicated unless more stringent requirements apply.

B. Joint-Sealant Installation Standard: Comply with recommendations in ASTM C 1193 for use of joint sealants as applicable to materials, applications, and conditions.

C. Install joint-sealant backings to support joint sealants during application and at position required to produce cross-sectional shapes and depths of installed sealants relative to joint widths that allow optimum sealant movement capability.

1. Do not leave gaps between ends of joint-sealant backings.
2. Do not stretch, twist, puncture, or tear joint-sealant backings.
3. Remove absorbent joint-sealant backings that have become wet before sealant application and replace them with dry materials.

D. Install joint sealants immediately following backing installation, using proven techniques that comply with the following:

1. Place joint sealants so they fully contact joint substrates.
2. Completely fill recesses in each joint configuration.
3. Produce uniform, cross-sectional shapes and depths relative to joint widths that allow optimum sealant movement capability.

E. Tooling of Nonsag Joint Sealants: Immediately after joint-sealant application and before skinning or curing begins, tool sealants according to the following requirements to form smooth, uniform beads of configuration indicated; to eliminate air pockets; and to ensure contact and adhesion of sealant with sides of joint:

1. Remove excess joint sealant from surfaces adjacent to joints.
2. Use tooling agents that are approved in writing by joint-sealant manufacturer and that do not discolor sealants or adjacent surfaces.

F. Provide joint configuration to comply with joint-sealant manufacturer's written instructions unless otherwise indicated.

3.4 CLEANING AND PROTECTION

A. Clean off excess joint sealant as the Work progresses, by methods and with cleaning materials approved in writing by joint-sealant manufacturers.

B. Protect joint sealants, during and after curing period, from contact with contaminating substances and from damage resulting from construction operations or other causes so sealants are without deterioration or damage at time of Substantial Completion. If, despite such protection, damage or deterioration occurs, cut out and remove damaged or deteriorated joint sealants immediately and replace with joint sealant so installations in repaired areas are indistinguishable from the original work.

3.5 PAVING-JOINT-SEALANT SCHEDULE

A. Joint-Sealant Application: Joints within concrete paving[<**PJS-#**>].

1. Joint Location:

a. Expansion and isolation joints in concrete paving.
b. Contraction joints in concrete paving.
c. Other joints as indicated.

2. Joint Sealant: [**Single-component, self-leveling, silicone joint sealant**]
3. Joint-Sealant Color: [**Manufacturer's standard**]

B. Joint-Sealant Application: Joints within concrete paving and between concrete and asphalt paving[<**PJS-#**>].

1. Joint Location:

a. Joints between concrete and asphalt paving.
b. Joints between concrete curbs and asphalt paving.
c. Other joints as indicated.

2. Joint Sealant: [**Hot-applied, single-component joint sealant**] .
3. Joint-Sealant Color: [**Manufacturer's standard**]

C. Joint-Sealant Application: Fuel-resistant joints within concrete paving[<**PJS-#**>].

1. Joint Location:

a. Expansion and isolation joints in concrete paving.
b. Contraction joints in concrete paving.
c. Other joints as indicated.

2. Joint Sealant: [**Fuel-resistant, multicomponent, pourable, modified-urethane, elastomeric joint sealant**]
3. Joint-Sealant Color: [**Manufacturer's standard**]

END OF SECTION 321373

SECTION 33 1100

POTABLE WATER SYSTEMS

PART 1 - GENERAL

1.1 RELATED DOCUMENTS

A. Drawings and general provisions of the Contract, including General and Supplementary Conditions and Division 1 Specification Sections, apply to this Section.

1.2 SUMMARY

A. Section includes potable water systems work.

B. Related Sections:
1. Division 31 Section "Earthwork" for excavation and backfill required for potable water systems; not work of this section.
2. Division 3 Sections for concrete work required for potable water systems; not work of this section.
3. Division 22 Section "Potable Water Systems" for interior building systems including interior piping, fixtures, and equipment; not work of this section.

1.3 QUALITY ASSURANCE

A. Codes and Standards:
1. Plumbing Code Compliance: Comply with applicable portions of National Standard Plumbing Code pertaining to selection and installation of potable water system materials and products.
2. Water Purveyor Compliance: Comply with requirements of Purveyor supplying water to project, obtain required permits and inspections.
3. Local Regulations: Comply with governing regulations and standards of local government having jurisdiction.

1.4 SUMBITTALS

A. Product Data: Submit manufacturer's technical product data and installation instructions for potable water system materials and products.

B. Maintenance Data: Submit maintenance data and parts list for potable water system materials and products. Include this data, product data, shop drawings, and record drawings in maintenance manual; in accordance with requirements of Division 1.

PART 2 - PRODUCTS

2.1 MANUFACTURERS

A. Approved Manufacturers: Subject to compliance with requirements, provide products of one of the following:
1. Plastic Line Markers
   a. Allen Systems Inc.
   b. Seton Name Plate Corp.
   c. Equal product as approved by Engineer.

2. Gate Valves:
   a. Clow Corp; Valve Div.
   b. Dresser Mfg.; Div. of Dresser Industries.
   c. Fairbanks Co.
   d. Kennedy Valve; Div. of ITT Grinnell Valve Co. Inc.
   e. Stockham Valves and Fittings Inc.
   f. Waterous Co.

2.2 IDENTIFICATION

A. Underground-Type Detectable Warning Tape (refer to Specification 31 23 00): Manufacturer's standard permanent, bright-colored, continuous-printed plastic tape, intended for direct-burial service; not less than 6" wide x 4 mils thick. Provide blue tape with black printing reading "CAUTION WATER LINE BURIED BELOW".

B. Nonmetallic Piping Label: If nonmetallic piping is used for water service, provide engraved plastic laminate, label permanently affixed to main electrical meter panel stating "THIS STRUCTURE HAS A NONMETALLIC WATER SERVICE".

2.3 PIPES AND PIPE FITTINGS

A. Provide piping materials and factory-fabricated piping products of sizes, types, pressure ratings, and capacities indicated. Where not indicated, provide proper selection as determined by Installer to comply with installation requirements. Provide sizes and types matching piping and equipment connections; provide fittings of materials which match pipe materials used in potable water systems. Where more than one type of materials or products are indicated, selection is Installer's option.

B. Piping: Provide pipe fittings and accessories of same material and weight/class as pipes, with joining method as indicated.
   1. PVC Pipe: Schedule 40 PVC, ASTM 1785 (1-1/2" to 2" pipe diameter). AWWA Pipe: C-900 class 150 (over 2" pipe diameter).
      a. Fittings: Schedule 80 PVC fittings ASTM 1785.
   2. Copper Tube: ASTM B 88; type K, soft-annealed temper (for 3/4" to 2" diameter pipe).
   3. Ductile Iron Pipe: AWWA C151, with cement mortar lining complying with AWWA C104; Class 51 unless otherwise indicated.
      a. Fittings: Ductile-Iron complying with AWWA C110, cement lined, with rubber gaskets conforming to AWWA C111.

2.4 VALVES

A. Gate Valves: AWWA C509, resilient seated 175 psi working pressure, threaded, flanged, hub, or other end configurations to suit size of value and piping connection. Provide inside screw type for use with curb valve box, iron body, bronze-mounted, double disc, parallel seat, non-rising stem.

2.5 ACCESSORIES

A. Anchorages: Provide anchorages for tees, wyes, crosses, plugs, caps, bends, valves, and hydrants. After installation, apply full coat of asphalt or other acceptable corrosion-retarding material to surfaces of ferrous anchorages.
   1. Clamps, Straps, and Washers: Steel, ASTM A 506.
   2. Rods: Steel, ASTM A 575.
   3. Rod Couplings: Malleable-iron, ASTM A 197.

4. Bolts: Steel, ASTM A 307.
5. Cast-Iron Washers: Gray-iron, ASTM A 126.
6. Thrust Blocks: Concrete, 2,500 psi.
7. Yard Hydrants: Non-freeze yard hydrants, 3/4" inlet, 3/4" hose outlet, bronze casing, cast-iron or cast-aluminum casing guard, key-operated, and tapped drain port in valve housing.
8. Valve Pits: Valve pits as indicated, constructed of poured-in-place or precast concrete. Construct of dimensions indicated with manhole access, ladder, and drain. Provide sleeves for pipe entry and exit, provide waterproof sleeve seals.

2.6 METERS

A. Meters and meter boxes shall be of the local Water District standards having jurisdiction.

PART 3 - EXECUTION

3.1 EXAMINATION

A. Examine areas and conditions under which potable water system's materials and products are to be installed. Do not proceed with work until unsatisfactory conditions have been corrected in manner acceptable to Installer.

3.2 INSTALLATION OF IDENTIFICATION

A. During back-filling/top-soiling of underground potable water piping, install continuous underground-type detectable warning tape (refer to Specification 02300), located directly over buried lines at 6" to 8" below finished grade.

3.3 INSTALLATION OF PIPE AND PIPE FITTINGS

A. Pipe:
1. PVC Pipe: Install in accordance with manufacturers recommendations and sand bedding as required by authority having jurisdiction.
2. Ductile Iron Pipe: Install in accordance with AWWA C600 "standard for installation of ductile-iron water mains and their appurtenances".
3. Copper Tube: Install in accordance with CDA "Copper Tube Handbook".

B. Depth of Cover: Provide minimum cover over piping of 12" below average local frost depth or 60" below finished grade, whichever is greater.

C. Water Main Connection: Arrange and pay for tap in water main, of size and in location as indicated, from water Purveyor.

D. Water Service Termination: Terminate potable water piping 5'-0" from building foundation in location and invert as indicated. Provide temporary pipe plug for piping extension into building, by work of Division 15.
1. Mark location with surface marker.

E. Runs shall be as close as possible to those shown on drawings.

F. Backfill only after pipe lines have been tested, inspected, and approved by the Architect.

3.4 INSTALLATION OF VALVES

A. Install valves with stems pointing up. Provide valve box over underground valves.

3.5 FIELD QUALITY CONTROL

A. Testing Agency: The Owner will employ and pay a qualified independent testing agency to perform field quality-control testing services specified in this section. Retesting of materials failing to meet specified requirements shall be done at Contractor's expense.

B. Piping Tests: Conduct piping tests before joints are covered, and after thrust blocks have sufficiently hardened. Fill pipeline 24-hrs. prior to testing, and apply test pressure to stabilize system. Use only potable water.

C. Hydrostatic Tests: Test at not less than 200 pounds per square inch for 2-hrs.
   1. Test fails if leakage exceeds 2-qts per hour per 100 gaskets or joints, irrespective of pipe diameter.
   2. Increase pressure in 50 psi increments and inspect each joint between increments. Hold at test pressure for one hour, decrease to 0 psi. Slowly increase again to test pressure and hold for one more hour.

3.6 ADJUSTING AND CLEANING

A. Disinfection of Potable Water System: Flush pipe system with clean potable water until no dirty water appears at point of outlet. Fill system with water-chlorine solution containing at least 50 ppm of chlorine. Valve off system and let stand for 24- hrs minimum. Flush with clean potable water until no chlorine remains in water coming from system.
   1. Repeat procedure if contamination is present in bacteriological examination.

B. Disinfection of Water Mains: Flush and disinfect in accordance with AWWA C652 "Standard for Disinfecting Water Mains".
   1. Contractor shall submit written verification to Project Manager stating, Disinfection has been completed in strict compliance with specification for this project and with jurisdiction having authority over water system.

END OF DOCUMENT 331100

SECTION 33 1119

FIRE SUPPRESSION WATER SYSTEM

PART 1 - GENERAL

1.1 SUMMARY.

A. Section includes fire water systems.

B. Related Sections:
1. Division 31 Section "Earthwork" for excavation and backfill required for fire water systems; not work of this section.
2. Refer to fire suppression sections for interior building systems including sprinklers and standpipes; this work is not included in this section.
   a. Refer to Division 21 Section Fire Suppression. Exterior water piping shall meet all requirements of this section. Test certificates are required.

1.2 QUALITY ASSURANCE

A. Codes and Standards:
1. NFPA Compliance: Install fire water systems in accordance with NFPA 24 "Standard for Installation of Private Fire Service Mains and Their Appurtenances.

B. Local Fire Department/Marshall Regulations: Comply with governing regulations pertaining to hydrants, including hose unit threading and similar matching of connections.

C. UL Compliance: Provide fire hydrants that comply with UL 246 "Hydrants for Fire-Protection Service", and are listed by UL.

1.3 SUBMITTALS

A. Product Data: Submit manufacturer's technical product data and installation instructions for fire water system materials and products.

B. Maintenance Data: Submit maintenance data and parts lists for fire water system materials and products. Include this data, product data, shop drawings, and record drawings in maintenance manual; in accordance with requirements of Division 1.

PART 2 - PRODUCTS

2.1 MANUFACTURER:

A. Acceptable manufacturers: Subject to compliance with requirements, provide products of one of the following:
1. Line Markers:
   a. Allen Systems Inc.
   b. Seton Name Plate Corp.
   c. Equal product as approved by Architect.
2. Pipe Strainers:
   a. "Automatic" Sprinkler Corp. of America; Div. A-T-O Inc.
   b. Cleveland Gear Co.; Sub of Vesper Corp.
   c. Grinnell Fire Protection Systems Co., Inc.

d. Hersey Products Inc.; Hersey Div.
e. Mueller Steam Specialty; Div. of Core Industries Inc.
f. Neptune Water Meter Co.
g. Rockwell International Corp.; Municipal & Utility Div.
h. Rockwood Systems Corp.
i. Zurn Industries Inc.; Fluid Handling Div.

3. Detector Meter:
   a. Hersey Products Inc.
4. Gate Valves:
   a. American Valve Mfg. Corp.
   b. American-Darling Valve; Div. of American Cast Iron Pipe Co.
   c. Clow Corp.; Valve Div.
   d. Fairbanks Co.
   e. Kennedy Valve; Div. of ITT Grinnell Valve Co., Inc.
   f. Stockham Valves & Fittings Inc.
   g. United Brass Works Inc.
   h. United States Pipe and Foundry Co.
   i. Waterous Co.
5. Check Valves:
   a. American-Darling Valve; Div. of American Cast Iron Pipe Co.
   b. Clow Corp.; Valve Corp.
   c. Fairbanks Co.
   d. Kennedy Valve; Div. of ITT Grinnell Valve Co., Inc.
   e. Mueller Co.
   f. Nibco Inc.
   g. Stockham Valves & Fittings Inc.
   h. Walworth Co.
   i. Waterous Co.
6. Fire Hydrants: As approved by authority having jurisdiction.

2.2 PIPES AND PIPE FITTINGS:

A. Provide materials and products complying with NFPA 24 where applicable. Provide sizes and types matching piping and equipment connections; provide fittings of materials which match pipe materials used in fire water piping systems. Where more than one type of materials or products are indicated, selection is Installer's option.

B. Piping: Provide pipe fittings and accessories of same material and weight/class as pipes, with joining method as indicated. Minimum size of Fire Main serving Building Fire sprinkler system on Fire Hydrants shall be 8 inches in diameter.
   1. Ductile Iron Pipe: AWWA C151, with cement mortar lining complying with AWWA C104; Class 51 unless otherwise indicated.
      a. Fittings: Ductile-Iron complying with AWWA C110, cement lined, with rubber gaskets conforming to AWWA C111.
   2. PVC Pipe: AWWA C-900, Class 150 unless otherwise indicated.
      a. Fittings: Schedule 80 PVC fittings complying with ASTM 1785.

2.3 PIPING SPECIALTIES:

A. Pipe Line Strainers: UL-listed, 175 psi working pressure, Y-type or basket type, with ends to suit piping connections.

2.4 METERS:

A. Detector-Type Meters: UL-listed, 175 psi working pressure, with disc meter bypass.

2.5 VALVES:

A. Gate Valves: UL-listed, 175 psi working pressure for 12" and smaller, 150 psi for sizes larger than 12". Threaded, flanged, hub, or other end configurations to suit size of valve and piping connection. Inside screw type for use with indicator post, iron body bronze mounted, non- rising stem, solid wedge disc.

B. Check Valves: UL-listed, 175 psi working pressure for 2" through 12", 150 psi for sizes larger than 12". Swing type, iron body bronze mounted with metal-to-metal or rubber-faced checks. Threaded, flanged, or hub end, to suit size and piping connections.

2.6 ACCESSORIES:

A. Anchorages: Provide anchorages for tees, wyes, crosses, plugs, caps, bends, valves, and hydrants. After installation, apply full coat of asphalt or other acceptable corrosion-retarding material to surfaces of ferrous anchorages.

B. Clamps, Straps, and Washers: Steel, ASTM A 506.

C. Rods: Steel, ASTM A 575.

D. Rod Couplings: Malleable-iron, ASTM A 197.

E. Bolts: Steel, ASTM A 307.

F. Cast-Iron Washers: Gray-iron, ASTM A 126.

G. Thrust Blocks: Concrete, 2,500 psi.

PART 3 - EXECUTION

3.1 INSTALLATION

A. Identification: During back-filling/top-soiling of underground fire water piping systems, install continuous underground-type plastic line marker, located directly over buried line at 6" to 8" below finished grade.

B. Pipe and pipe fittings:
1. Ductile-Iron Pipe: Install in accordance with AWWA C600 "Standard for Installation of Ductile-Iron Water Mains and Their Appurtenances".
2. PVC Pipe: Install in accordance with manufacturers recommendations and provide pipe bedding as required by authority having jurisdiction.

C. Piping Specialties:
1. Pipe Line Strainers: Install as indicated, with valved blowoff piped to drain.

D. Meters: Install as indicated with shutoff valve on either side of meter and valved bypass full line size.

E. Valves: Provide post indicator for control valves.
1. Shutoff Valves: Install shutoff valve ahead of each hydrant.

F. Runs shall be as close as possible to those shown on drawings.

3.2 FIELD QUALITY CONTROL:

A. Testing Agency: The Owner will employ and pay a qualified independent testing agency to perform field quality-control testing services specified in this section. Retesting of materials failing to meet specified requirements shall be done at Contractor's expense.

B. Piping Tests: Conduct piping tests before joints are covered, and after thrust blocks have sufficiently hardened. Fill pipeline with water 24-hrs prior to testing, and apply test pressure to stabilize system.

C. Hydrostatic Tests: Test at not less than 200 psi for 2-hrs, or at 50 psi above maximum static pressure if it is greater than 150 psi.
   1. Test fails if leakage exceeds 2-qts per hour per 100 gaskets or joints irrespective of pipe diameter.
   2. Increase pressure in 50 psi increments and inspect each joint between increments. Hold at test pressure for one hour, decrease to 0 psi. Slowly increase again to test pressure and hold for one more hour.

D. Operating Tests: Open and close all valves and hydrants under system water pressure. Check dry barrel hydrants for proper drainage.
   1. For systems with fire pumps, run pumps during operating tests.

3.3 ADJUSTING AND CLEANING:

A. Flushing: Flush underground mains and lead-in connections to sprinkler risers before connection is made to sprinklers, standpipes, or other fire protection system piping.
   1. Flush at flow rate not less than that indicated in NFPA 24, or at hydraulically calculated water demand rate of the system, whichever is greater.

B. Disinfection of Potable Water System: Flush pipe system with clean potable water until no dirty water appears at point of outlet. Fill system with water-chlorine solution containing at least 50 ppm of chlorine. Valve off system and let stand for 24- hrs minimum. Flush with clean potable water until no chlorine remains in water coming from system.
   1. Repeat procedure if contamination is present in bacteriological examination.

C. Disinfection of Water Mains: Flush and disinfect in accordance with AWWA C652 "Standard for Disinfecting Water Mains".
   1. Contractor shall submit written verification to Project Manager stating, Disinfection has been completed in strict compliance with specification for this project and with jurisdiction having authority over water system

END OF DOCUMENT 331119

SECTION 33 3100

SANITARY SEWAGE SYSTEMS

PART 1 - GENERAL

1.1 SUMMARY.

A. Section includes sanitary sewage systems.

B. Related Sections:
1. Refer to Division 31 section "Earthwork" for excavation and backfill required for sanitary sewage systems; not work of this section.
2. Refer to Division 22 section "Soil and Waste Systems" for interior building systems including drain, waste, and vent piping; not work of this section.

1.2 QUALITY ASSURANCE:

A. Codes and Standards:
1. Plumbing Code Compliance: Comply with applicable portions of National Standard Plumbing Code pertaining to selection and installation of sanitary sewage system materials and products.
2. Local Regulations: Comply with governing regulations and standards of local government having jursidiction.

PART 2 - PRODUCTS

2.1 MANUFACTURER:

A. Acceptable Manufacturer: Subject to compliance with requirements, provide products of one of the following:
1. Line Markers:
a. Allen Systems, Inc.
b. Emed Co., Inc.
c. Seton Name Plate Corp.

2.2 IDENTIFICATION:

A. Underground-Type Detectable Warning Tape (refer to Specification 02300): Manufacturer's standard permanent, bright-colored, continuous-printed plastic tape, intended for direct-burial service; not less than 6" wide x 4 mils thick. Provide green tape with black printing reading "CAUTION SEWER LINE BURIED BELOW".

2.3 PIPES AND PIPE FITTINGS:

A. Provide pipe fittings and accessories of same material and weight/class as pipes, with joining method as indicated.
1. Cast-Iron Soil Pipe: ASTM A 74, hub and spigot ends, service weight unless otherwise indicated.
a. Fittings: Cast-iron hub and spigot ends, standard strength unless otherwise indicated.

2. Concrete Pipe: ASTM C 14, Class III non-reinforced concrete pipe, unless otherwise indicated.
   a. Fittings: Concrete, same strength as adjoining pipe, tongue and groove gasketed joints complying with ASTM C 443.
3. Polyvinyl Chloride (PVC) Sewer Pipe: ASTM D 3034, Type PSM, SDR 35.
   a. Fittings: ASTM 3034, bell and spigot joints.

2.4 SANITARY SEWER MANHOLES:

A. Provide precast reinforced concrete sanitary manholes as indicated, and complying with ASTM C 478.
   1. Top: Precast concrete, of concentric cone, eccentric cone, or flat slab top type, as indicated.
   2. Base: Precast concrete, with base riser section and separate base slab, or base riser section with integral floor, as indicated.
   3. Steps: Ductile-iron or aluminum, integrally cast into manhole sidewalls.
   4. Frame and Cover: Ductile-iron, 21-3/4" diameter cover, heavy-duty, indented top design, with lettering cast into top reading "SANITARY SEWER".
   5. Pipe Connectors: Resilient, complying with ASTM C 923.

2.5 CLEANOUTS:

A. Pipe extension to grade with ferrule and countersunk cleanout plug. Round cast-iron access frame over cleanout, with heavy-duty secured scoriated cover with lifting device.

PART 3 - EXECUTION

3.1 INSTALLATION OF IDENTIFICATION:

A. During back-filling/top-soiling of sanitary sewage systems, install continuous underground-type detectable warning tape, located directly over buried line at 6" to 8" below finished grade.

3.2 INSTALLATION OF PIPE AND FITTINGS:

A. Install piping in accordance with governing authorities having jurisdiction, except where more stringent requirements are indicated.
   1. Inspect piping before installation to detect apparent defects. Mark defective materials with white paint and promptly remove from site.
   2. Lay piping beginning at low point of system, true to grades and alignment indicated, with unbroken continuity of invert.
   3. Place bell ends or groove ends of piping facing upstream.
   4. Install gaskets in accordance with manufacturer's recommendations for use of lubricants, cements, and other special installation requirements.
   5. Runs shall be as close as possible to those shown on drawings.

B. Pipe:
   1. Cast-Iron Pipe: Install in accordance with applicable provisions of CISPI "Cast Iron Soil Pipe and Fittings Handbook".
   2. Concrete Pipe: Install in accordance with applicable provisions of ACPA "Concrete Pipe Installation Manual".
   3. Plastic Pipe: Install in accordance with manufacturer's installation recommendations, and in accordance with ASTM D 2321.

C. Cleaning Pipe: Clear interior of piping of dirt and other superfluous material as work progresses.

Maintain swab or drag in line and pull past each joint as it is completed.
1. In large, accessible piping, brushes and brooms may be used for cleaning.
2. Place plugs in ends of uncompleted conduit at end of day or whenever work stops.
3. Flush lines between manholes if required to remove collected debris.

D. Joint Adapters: Make joints between different types of pipe with standard manufactured adapters and fittings intended for that purpose.

E. Interior Inspection: Inspect piping to determine whether line displacement or other damage has occurred.
1. Make inspections after lines between manholes, or manhole locations, have been installed and approximately 2-ft of backfill is in place, and again at completion of project.
2. If inspection indicates poor alignment, debris, displaced pipe, infiltration, or other defects, correct such defects, and reinspect.

3.3 SANITARY MANHOLES:

A. Place precast concrete sections as indicated. Where manholes occur in pavements, set tops of frames and covers flush with finish surface. Elsewhere, set tops 3" above finish surface, unless otherwise indicated.
1. Install in accordance with ASTM C 891.
2. Apply bituminous mastic coating at joints of sections.

3.4 TAP CONNECTIONS:

A. Make connections to existing piping and underground structures, so that finished work will conform as nearly as practicable to requirements specified for new work.

B. Use commercially manufactured wyes for branch connections. Field cutting into piping will not be permitted. Spring wyes into existing line and encase entire wye, plus 6" overlap, with not less than 6" of 4,000 psi 28-day compressive strength concrete.

C. Take care while making tap connections to prevent concrete or debris from entering existing piping or structure. Remove debris, concrete, or other extraneous material which may accumulate.

3.5 BACKFILLING:

A. Conduct backfilling operations of open-cut trenches closely following laying, jointing, and bedding or pipe, and after initial inspection and testing are completed.

3.6 FIELD QUALITY CONTROL:

A. Testing Agency: The Owner will employ and pay a qualified independent testing agency to perform field quality-control testing services specified in this section. Retesting of materials failing to meet specified requirements shall be done at Contractor’s expense.

B. Testing: Perform testing of completed piping in accordance with local authorities having jurisdiction.

END OF DOCUMENT 333100

SECTION 33 4100

STORM DRAINAGE

PART 1 - GENERAL

1.1 RELATED DOCUMENTS

A. Drawings and general provisions of the Contract, including General and Supplementary Conditions and Division 1 Specification Sections, apply to this Section.

1.2 SUMMARY

A. This Section includes storm drainage outside the building.

B. Related Sections include the following:
1. Refer to Division-2 Section "Earthwork" for excavation and backfill required for storm drainage systems; not work of this section.
2. Refer to Division-2 sections for concrete work required for storm drainage systems; not work of this section.
3. Refer to Division-22 section "Plumbing Piping" for interior building systems including connections to roof and deck drains; not work of this section.

1.3 PROJECT CONDITIONS

A. Site Information: Perform site survey, and verify existing utility locations.

B. Existing Structures: Locate existing structures and piping to be closed and abandoned.

C. Existing Utilities: Do not interrupt utilities serving facilities occupied by Owner or others unless permitted under the following conditions and then only after arranging to provide temporary utility services according to requirements indicated:
1. Notify Architect not less than two days in advance of proposed utility interruptions.
2. Do not proceed with utility interruptions without Architect's written permission.

1.4 QUALITY ASSURANCE

A. Codes and Standards:
1. Local Regulations: Comply with governing regulations and standards of local City having jurisdiction.

PART 2 - PRODUCTS

2.1 MANUFACTURERS

A. Manufacturers: Subject to compliance with requirements, provide products by one of the following:
1. Stormwater Disposal Systems:
a. Advanced Drainage Systems, Inc.
b. Cultec, Inc.

c. Hancor, Inc.
d. Infiltrator Systems, Inc.
e. PSA, Inc.

2.2 PIPES AND FITTINGS

A. Provide pipe fittings and accessories of same material and weight/class as pipes, with joining method as indicated.

B. Dual-wall PP Pipe and Fittings: AASHTO M 300, Type S, with smooth waterway for coupling joints.
1. Soiltight Couplings: AASHTO M 294, matching pipe and fittings to form soiltight joints.

C. Polyvinyl Chloride (PVC) Sewer Pipe: ASTM D 3034, Type PSM, SDR 35.
1. Fittings: ASTM 3034, bell and spigot joints. 12" diameter and smaller.

2.3 MANHOLES

A. Provide precast reinforced concrete storm drain manholes as indicated, complying with ASTM C 478.
1. Top: Precast concrete, of concentric cone, eccentric cone, or flat slab top type, as indicated.
2. Base: Precast concrete, with base riser section and separate base slab, or base riser section with integral floor, as indicated.
3. Steps: Ductile-iron or aluminum, integrally cast into manhole sidewalls.
4. Frame and Cover: Ductile-iron, 21-3/4" diameter cover, heavy-duty, indented top design, with lettering cast into top reading "STORM SEWER", conforming to ASTM A-48, unless otherwise specified on the plans.
5. Pipe Connections: Resilient, complying with ASTM C 923.

2.4 CATCH BASINS

A. Precast or cast in place reinforced concrete catch basins as indicated.
1. Basin: Precast or cast in place reinforced concrete, flat slab top.
2. Frame and Grate: Ductile-iron or galvanized steel grate, heavy- duty, bicycle proof.
3. Pipe Connectors: Resilient, complying with ASTM C 923.

2.5 PIPE OUTLETS

A. Head Walls: Amcor CP190 Precast Flared End Section or Equivalent.

B. Riprap Basins: Broken, irregular size and shape, graded stone.
1. Average Size: NSA No. R-5, screen opening 5 inches (127 mm).

PART 3 - EXECUTION

3.1 EARTHWORK

A. Excavating, trenching, and backfilling are specified in Division 2 Section "Earthwork."

3.2 INSTALLATION, GENERAL

A. General Locations and Arrangements: Drawing plans and details indicate general location and

arrangement of underground storm drainage piping. Location and arrangement of piping layout take design considerations into account. Install piping as indicated, to extent practical.

B. Install piping beginning at low point, true to grades and alignment indicated with unbroken continuity of invert. Place bell ends of piping facing upstream. Install gaskets, seals, sleeves, and couplings according to manufacturer's written instructions for use of lubricants, cements, and other installation requirements. Maintain swab or drag in line, and pull past each joint as it is completed.

C. Use manholes for changes in direction, unless fittings are indicated. Use fittings for branch connections, unless direct tap into existing sewer is indicated.

D. Install gravity-flow piping and connect to building's storm drains, of sizes and in locations indicated. Terminate piping as indicated.
   1. Install piping pitched down in direction of flow, at minimum slope of 1 percent, unless otherwise indicated.

3.3 PIPE JOINT CONSTRUCTION AND INSTALLATION

A. General: Join and install pipe and fittings according to installations indicated.

B. PE Pipe and Fittings: As follows:
   1. Join pipe, tubing, and fittings with couplings for soiltight joints according to manufacturer's written instructions.
   2. Install according to ASTM D 2321 and manufacturer's written instructions.
   3. Install corrugated piping according to the Corrugated Polyethylene Pipe Association's "Recommended Installation Practices for Corrugated Polyethylene Pipe and Fittings."

C. Concrete Pipe and Fittings: Install according to ACPA's "Concrete Pipe Installation Manual." Use the following seals:
   1. Round Pipe and Fittings: ASTM C 443 (ASTM C 443M), rubber gaskets.

3.4 MANHOLE INSTALLATION

A. General: Install manholes, complete with appurtenances and accessories indicated.

B. Form continuous concrete channels and benches between inlets and outlet.

C. Set tops of frames and covers flush with finished surface of manholes that occur in pavements. Set tops 3 inches (76 mm) above finished surface elsewhere, unless otherwise indicated.

D. Install precast concrete manhole sections with gaskets according to ASTM C 891.

3.5 CATCH-BASIN INSTALLATION

A. Construct catch basins to sizes and shapes indicated.

B. Set frames and grates to elevations indicated.

3.6 STORM DRAINAGE OUTLET INSTALLATION

A. Construct riprap of broken stone, as indicated.

B. Install outlets that spill onto grade, with flared end sections that match pipe, where indicated.

3.7 DRAIN INSTALLATION

A. Install type of drains in locations indicated.

B. Fasten grates to drains if indicated.

C. Set drain frames and covers with tops flush with pavement surface.

3.8 FIELD QUALITY CONTROL

A. Clear interior of piping and structures of dirt and superfluous material as work progresses. Maintain swab or drag in piping, and pull past each joint as it is completed.
   1. In large, accessible piping, brushes and brooms may be used for cleaning.
   2. Place plug in end of incomplete piping at end of day and when work stops.
   3. Flush piping between manholes and other structures to remove collected debris.

B. Inspect interior of piping to determine whether line displacement or other damage has occurred. Inspect after approximately 24 inches (600 mm) f backfill is in place, and again at completion of Project.
   1. Submit separate reports for each system inspection.
   2. Defects requiring correction include the following:
      a. Alignment: Less than full diameter of inside of pipe is visible between structures.
      b. Crushed, broken, cracked, or otherwise damaged piping.
      c. Infiltration: Water leakage into piping.
      d. Exfiltration: Water leakage from or around piping.
   3. Replace defective piping using new materials, and repeat inspections until defects are within allowances specified.
   4. Reinspect and repeat procedure until results are satisfactory.

END OF DOCUMENT 334100

PROJECT MANUAL

AIS Residential Facility

West Valley, Utah

DeKold Architecture

APPENDIX A - GEOTECHNICAL DATA

AGEC
Applied GeoTech

GEOTECHNICAL INVESTIGATION

PROPOSED AIS RESIDENTIAL FACILITY

1739 WEST LAKE PARK DRIVE

WEST VALLEY CITY, UTAH

PREPARED FOR:

ABILITY INCLUSION SERVICES
1275 WEST 2320 SOUTH
WEST VALLEY CITY, UTAH 84119

ATTENTION: KRISTEN FLOYD

PROJECT NO. 1240801 **NOVEMBER 25, 2024**

600 West Sandy Parkway • Sandy, Utah 84070 • (801) 566-6399 • www.agecinc.com

TABLE OF CONTENTS

EXECUTIVE SUMMARY ..... Page 1

SCOPE ..... Page 2

SITE CONDITIONS ..... Page 2

FIELD STUDY ..... Page 3

SUBSURFACE CONDITIONS ..... Page 3

SUBSURFACE WATER ..... Page 5

PERCOLATION TESTING ..... Page 5

PROPOSED CONSTRUCTION ..... Page 6

RECOMMENDATIONS ..... Page 6

A. Site Grading ..... Page 6
B. Foundations ..... Page 9
C. Concrete Slab-on-Grade ..... Page 11
D. Lateral Earth Pressures ..... Page 11
E. Liquefaction, Faulting and Seismicity ..... Page 12
F. Water Soluble Sulfates ..... Page 14
G. Pavement ..... Page 14
H. Preconstruction Meeting ..... Page 16

LIMITATIONS ..... Page 17

REFERENCES ..... Page 18

FIGURES

EXPLORATORY BORING AND CPT LOCATIONS FIGURE 1
EXPLORATORY BORING LOGS, LEGEND & NOTES FIGURE 2
CONSOLIDATION TEST RESULTS FIGURES 3-4
SUMMARY OF LABORATORY TEST RESULTS TABLE I

APPENDIX

CONE PENETRATION TEST RESULTS

EXECUTIVE SUMMARY

1. Approximately 5 inches of asphaltic concrete was encountered in Boring B-2. Approximately 1½ and 2 feet of fill consisting of clayey gravel with sand to silty sand was encountered below the asphaltic concrete in Boring B-2 and in the upper portion of Boring B-1, respectively. Natural clayey sand to sandy lean clay was encountered below the fill and extends to a depth of approximately 9 feet overlying lean clay extending the full depth of the borings, approximately 15½ feet.

   A cone penetration test (CPT-1) was conducted at the site to a depth of approximately 50½ feet. The upper approximately 3½ feet was drilled out. Clay and sand was encountered to a depth of approximately 8 feet overlying clay to approximately 16 feet overlying interlayered clay and sand to the maximum depth of the CPT, approximately 50½ feet.

2. Subsurface water was encountered in the borings at depths ranging from approximately 6 to 7 feet below the ground surface when checked 9 days after drilling. Fluctuations in the subsurface water level will occur over time. An evaluation of such fluctuations is beyond the scope of this investigation.

3. Footings bearing on the undisturbed natural soil may be designed using an allowable net bearing pressure of 1,500 pounds per square foot. Footings bearing on at least 2 feet of properly compacted structural fill extending down to the undisturbed natural soil may be designed for a net allowable bearing pressure of 2,500 pounds per square foot.

4. The upper natural soil consists of clayey sand and will be easily disturbed by construction traffic when the clayey sand is very moist to wet. Placement of 1 to 2 feet of granular fill will provide limited support for construction equipment when the subgrade consists of very moist to wet clayey sand.

5. Based on the subsurface conditions encountered at the site to the depth investigated, the site-specific liquefaction analysis conducted and our understanding of geologic conditions in the area, it is our professional opinion that liquefaction-induced settlement on the order of ½ inch or less could occur during the design seismic event. The liquefaction hazard can be mitigated using aggregate piers if the amount of liquefaction-induced settlement is considered excessive for the proposed building. It is our professional opinion that lateral spread is not a significant hazard at the project site.

6. Geotechnical information related to foundations, subgrade preparation, pavement design and materials is included in the report.

SCOPE

This report presents the results of a geotechnical investigation for the proposed AIS residential facility to be constructed at 1739 West Lake Park Drive in West Valley City, Utah. The report presents the subsurface conditions encountered, laboratory test results and recommendations for foundations and pavement. The study was conducted in general accordance with our proposal dated October 3, 2024.

Field exploration was conducted to obtain information on the subsurface conditions. Samples obtained from the field investigation were tested in the laboratory to determine physical and engineering characteristics of the on-site soil. Information obtained from the field and laboratory was used to define conditions at the site for our engineering analysis and to develop recommendations for the proposed foundations and pavement.

This report has been prepared to summarize the data obtained during the study and to present our conclusions and recommendations based on the proposed construction and the subsurface conditions encountered. Design parameters and a discussion of geotechnical engineering considerations related to construction are included in the report.

SITE CONDITIONS

There are no permanent structures or pavements on the site.

Vegetation at the site consists of occasional weeds. The ground surface at the site is relatively flat with a gentle slope down to the west.

Lake Park Drive extends along the north side of the site and Redwood Road is to the east. Residential development extends to the south and west.

FIELD STUDY

The borings were drilled at the approximate locations shown on Figure 1 on November 13, 2024 using direct push. The borings were drilled to observe the subsurface conditions and to obtain soil samples for laboratory testing. The borings were logged and soil samples obtained by a geologist from AGEC. Logs of the subsurface conditions encountered in the borings are presented on Figure 2 with legend and notes on Figure 3.

A cone penetration test (CPT-1) was conducted at the approximate location shown on Figure 1 on November 13, 2024. Results of the CPT are included in the appendix.

SUBSURFACE CONDITIONS

Approximately 5 inches of asphaltic concrete was encountered in Boring B-2. Approximately 1½ and 2 feet of fill consisting of clayey gravel with sand to silty sand was encountered below the asphaltic concrete in Boring B-2 and in the upper portion of Boring B-1, respectively. Natural clayey sand to sandy lean clay was encountered below the fill and extends to a depth of approximately 9 feet overlying lean clay extending the full depth of the borings, approximately 15½ feet.

A cone penetration test (CPT-1) was conducted at the site to a depth of approximately 50½ feet. The upper approximately 3½ feet was drilled out. Clay and sand was encountered to a depth of approximately 8 feet overlying clay to approximately 16 feet overlying interlayered clay and sand to the maximum depth of the CPT, approximately 50½ feet.

A description of the soil encountered in the borings follows:

Fill - The fill consists of clayey gravel with sand to silty sand. The fill is slightly moist to moist and gray to dark brown.

Lean Clay - The clay contains small to moderate amounts of sand and occasional silt layers. It is soft to medium stiff, wet and grayish brown with slight iron oxide staining.

Laboratory tests conducted on samples of the clay indicate that it has natural moisture contents of 38 to 50 percent and natural dry densities of 73 to 84 pounds per cubic foot (pcf).

Results of consolidation tests conducted on samples of the clay indicate that it will compress a small to moderate amount with the addition of light to moderate loads. The results of the consolidation tests are presented on Figures 3 and 4.

Clayey Sand - The clayey sand contains some silty sand and sandy lean clay layers. It is medium dense/medium stiff, moist to wet and light brown to gray with slight iron oxide staining.

Laboratory tests conducted on samples of the clayey sand and sandy lean clay indicate that it has natural moisture contents of 10 to 14 percent and natural dry densities of 108 to 110 pcf. An unconfined compressive strength of 2,165 pounds per square foot (psf) was measured for a sample of sandy lean clay tested in the laboratory.

Results of the laboratory tests are summarized on Table I and are included on the logs of the borings.

SUBSURFACE WATER

Subsurface water was encountered in the borings at depths ranging from approximately 6 to 7 feet below the ground surface when checked 9 days after drilling. Fluctuations in the subsurface water level will occur over time. An evaluation of such fluctuations is beyond the scope of this investigation.

PERCOLATION TESTING

A 4-foot-deep boring was drilled adjacent to Boring B-1 to conduct a percolation test. The percolation test hole was drilled on November 13, 2024. Water was added to the percolation test hole and allowed to soak. The following day, more water was added to the test hole and the rate of water drop in the test hole was measured over several successive time intervals. A percolation rate on the order of 27 minutes per inch was measured for the soil tested.

PROPOSED CONSTRUCTION

The proposed building is planned to be a two-story, wood-frame slab-on-grade structure. We have assumed maximum column loads of 75 kips and maximum wall loads of 5 kips per lineal foot.

A paved parking area and pickup lane are planned for the west and north sides of the site, respectively. We anticipate that traffic for paved areas will consist of up to 100 cars and five delivery trucks per day and one garbage truck per week.

A stormwater detention basin is planned for the eastern portion of the site.

If the proposed construction, building loads or traffic is significantly different from what is described above, we should be notified so that we can reevaluate the recommendations given.

RECOMMENDATIONS

Based on the subsurface conditions encountered, laboratory test results, and the proposed construction, the following recommendations are given:

A. Site Grading

1. Existing Fill

   Up to approximately 2 feet of fill was encountered in the borings. Based on the conditions encountered, it is our professional opinion that the fill, in its current condition, is not suitable to support the proposed building, pavements and other settlement-sensitive improvements. Unsuitable fill, topsoil, debris and other deleterious materials should be removed from below these areas.

2. Subgrade Preparation

   The upper natural soil consists of clayey sand and will be easily disturbed by construction traffic when the clayey sand is very moist to wet. Placement of 1 to 2 feet of granular fill will provide limited support for construction equipment when the subgrade consists of very moist to wet clayey sand. The subgrade should be proof rolled to identify soft areas. Soft areas should be removed and replaced with properly compacted fill.

   The topsoil, organics, unsuitable fill and other deleterious materials should be removed from below proposed structures, slabs and pavement prior to placement of structural fill or pavement materials.

3. Excavation

Excavation at the site can be accomplished with typical excavation equipment.

Temporary unretained excavation slopes may be constructed at 1½ horizontal to 1 vertical or flatter. Flatter excavation slopes will be needed if seepage is encountered.

Excavations that extend below the free water level should be dewatered. The water level should be maintained at least 2 feet below the base of the excavation during initial fill and concrete placement. Free-draining gravel with less than 5 percent passing the No. 200 Sieve should be used as fill or backfill below the original water level. A filter fabric should be provided between the natural soil and free-draining gravel.

4. Compaction

Compaction of materials placed at the site should equal or exceed the minimum densities as indicated below when compared to the maximum dry density as determined by ASTM D 1557.

Fill To Support	Compaction Criteria
Foundations	≥ 95%
Concrete Slabs	≥ 90%
Pavement	
Base Course	≥ 95%
Fill placed below Base Course	≥ 90%
Landscaping	≥ 85%
Retaining Wall Backfill	85 - 90%

Fill should be compacted at a moisture content within 2 percent of the optimum moisture content. Drying of the soil may not be practical during cold or wet periods of the year.

Fill and pavement materials should be frequently tested during construction for compaction.

5. Materials

Materials used as fill for the project are anticipated to consist of imported fill and the on-site soil. Recommendations for these materials are shown below.

a. Imported Fill

Listed below are materials recommended for imported structural fill.

Fill to Support	Recommendations
Footings	Non-expansive granular soil Passing No. 200 Sieve < 35% Liquid Limit < 30% Maximum size 4 inches
Floor Slab (Upper 4 inches)	Sand and/or Gravel Passing No. 200 Sieve < 5% Maximum size 2 inches
Slab Support	Non-expansive granular soil Passing No. 200 Sieve < 50% Liquid Limit < 30% Maximum size 6 inches

b. On-Site Soil

The onsite granular fill meeting the criteria presented above may be considered for use as structural fill. The on-site fine-grained fill and natural soils are not recommended for use as fill below structures but may be considered for site grading fill below areas of proposed pavement or other site improvements or as utility trench or foundation wall backfill.

Depending on the moisture condition of the soil at the time of construction, the soil may require wetting or drying prior to use as fill. Drying of the soil may not be practical during cold or wet times of the year.

6. Drainage

The ground surface surrounding the proposed building should be sloped away from the building in all directions. Roof downspouts and drains should discharge beyond the limits of backfill.

The collection and diversion of drainage away from the pavement surface is important to the satisfactory performance of the pavement section. Proper drainage should be provided.

B. Foundations

1. Bearing Material

With the proposed construction and the subsurface conditions encountered, the building may be supported on spread footings bearing on the undisturbed natural clay or on compacted structural fill extending down to the undisturbed natural clay. Structural fill should extend out away from the edge of the footings at least a distance equal to the depth of fill beneath footings.

Unsuitable fill, topsoil, organics and other deleterious materials should be removed from below proposed foundation areas.

2. Bearing Pressure

Footings bearing on the undisturbed natural soil may be designed using an allowable net bearing pressure of 1,500 pounds per square foot. Footings bearing on at least 2 feet of properly compacted structural fill extending down

to the undisturbed natural soil may be designed for a net allowable bearing pressure of 2,500 pounds per square foot.

Footings should have a width of at least 1½ feet and a depth of embedment of at least 1 foot.

3. Temporary Loading Conditions

The allowable bearing pressure may be increased by one-half for temporary loading conditions such as wind or seismic loads.

4. Settlement

Based on the subsurface conditions encountered and the assumed building loads, we estimate that total settlement will be on the order of 1 inch or less. Differential settlement is estimated to be on the order of ½ inch or less.

Care will be required not to disturb the natural soil at the base of foundation excavations to maintain settlement within tolerable limits.

5. Frost Depth

Exterior footings and footings beneath unheated areas should be placed at least 30 inches below grade for frost protection.

6. Foundation Base

The base of footing excavations should be cleared of loose or deleterious material prior to structural fill or concrete placement.

7. Construction Observation and Testing

A representative of the geotechnical engineer should observe subgrade areas and foundation excavations prior to placement of site grading fill and observe foundation excavations prior to placement of structural fill or concrete.

C. Concrete Slab-on-Grade

1. Slab Support

Topsoil, organics, materials, unsuitable fill and other deleterious materials should be removed from below proposed slab areas.

Concrete slabs may be supported on the undisturbed natural soil or on compacted structural fill extending down to the undisturbed natural soil.

2. Underslab Sand and/or Gravel

Free-draining sand and/or gravel (less than 5 percent passing the No. 200 sieve) should be placed below the floor slab to promote even curing of the concrete.

3. Vapor Barrier

A vapor barrier should be placed under the concrete floor if the floor will receive an impermeable floor covering. The barrier will reduce the amount of water vapor passing from below the slab to the floor covering.

D. Lateral Earth Pressures

1. Lateral Resistance for Footings

Lateral resistance for spread footings placed on the natural soil or on compacted structural fill is controlled by sliding resistance between the footing and the foundation soils. Friction values of 0.35 and 0.45 may be used in design for ultimate lateral resistance for footings bearing on the clayey soil and structural fill, respectively. The passive resistance of the soil adjacent to the footings may be considered in the design of lateral resistance of footings.

2. Subgrade Walls and Retaining Structures

The following equivalent fluid weights are given for design of subgrade walls and retaining structures. The active condition is where the wall moves away from the soil. The passive condition is where the wall moves into the soil and the at-rest condition is where the wall does not move. The values listed below assume a horizontal surface adjacent to the top and bottom of the wall.

Soil Type	Active	At-Rest	Passive
Clay & Silt	50 pcf	65 pcf	250 pcf
Sand & Gravel	40 pcf	55 pcf	300 pcf

3. Seismic Conditions

Under seismic conditions, the equivalent fluid weight should be increased by 45 pcf for the active condition, 30 pcf for the at-rest condition and decreased by 45 pcf for the passive condition. This assumes a peak ground acceleration of 0.83g for a 2 percent probability of exceedance in a 50-year period.

4. Safety Factors

The values recommended above assume mobilization of the soil to achieve soil strength. Conventional safety factors used for structural analysis for such items as overturning and sliding resistance should be used in design.

E. Liquefaction, Faulting and Seismicity

1. Liquefaction

The site is located in an area mapped as having a “high” potential for liquefaction (Salt Lake County, 2002). The soil type most susceptible to liquefaction during a

large earthquake is loose, clean sand. The liquefaction potential for soil decreases with an increase in fines content and density.

Based on the subsurface conditions encountered at the site to the depth investigated, the site-specific liquefaction analysis conducted and our understanding of geologic conditions in the area, it is our professional opinion that liquefaction-induced settlement on the order of ½ inch or less could occur during the design seismic event. The liquefaction hazard can be mitigated using aggregate piers if the amount of liquefaction- induced settlement is considered excessive for the proposed building. It is our professional opinion that lateral spread is not a significant hazard at the project site.

2. Faulting

There are no mapped active faults extending through the site. The closest mapped active fault to the site is the Taylorsville fault located approximately 4,200 feet west of the site (Utah Geological Survey, 2024).

3. Seismicity

Listed below is a summary of the site parameters that may be used with the 2021 International Building Code:

Description	Value
Site Class	D[1]
S_s - MCE_R ground motion (period=0.2s)	1.52g
S_1 - MCE_R ground motion (period=1.0s)	0.54g
F_a - Site amplification factor at 0.2s	1.2
F_v - Site amplification factor at 1.0s	1.77
PGA - MCE_G peak ground acceleration	0.69g
PGA_M - Site modified peak ground acceleration	0.83g

[1] *Site Class D was selected for the site based on the subsurface conditions encountered to the depth investigated and our understanding of geologic conditions in the area. Site Class F may be representative of the site if the liquefaction hazard is not mitigated.*

F. Water Soluble Sulfates

One sample of the natural soil was tested for water soluble sulfate content. Results of the test indicate the soil has a negligible sulfate attack potential on concrete. Sulfate resistant cement is not needed for concrete placed in contact with the natural soil. Other conditions may dictate the type of cement to be used in concrete for the project.

G. Pavement

Based on the subsoil conditions encountered, laboratory test results and the assumed traffic as indicated in the Proposed Construction section of the report, the following pavement support recommendations are given:

1. <u>Subgrade Support</u>

   The near surface soil encountered at the site predominantly consists of fill overlying clayey sand and sandy lean clay. We have assumed a California Bearing Ratio (CBR) value of 3 percent which assumes a clay subgrade.

2. Pavement Thickness

Based on the subsoil conditions encountered, assumed traffic, a design life of 20 years for flexible pavement and 30 years for rigid pavement, and methods presented by AASHTO, a pavement section consisting of 3 inches of asphaltic concrete overlying 8 inches of base course is calculated. The base course thickness could be reduced to 6 inches in areas where the subgrade consists of at least 6 inches of gravel and in areas with no truck traffic. Alternatively, a rigid pavement section consisting of 5 inches of Portland cement concrete may be used.

A pavement section consisting of 6½ inches of Portland cement concrete over 4 inches of base course is recommended for the trash dumpster approach slab.

3. Pavement Materials and Construction

a. Flexible Pavement (Asphaltic Concrete)

The pavement materials should meet the specifications for the applicable jurisdiction.

b. Rigid Pavement (Portland Cement Concrete)

The rigid pavement thickness assumes that the pavement will have aggregate interlock joints and that a concrete shoulder or curb will be provided.

The pavement materials should meet the specifications for the applicable jurisdiction. The pavement thicknesses indicated above assume that the concrete will have a 28-day compressive strength of 5,000 pounds per square inch. Concrete should be air entrained with approximately 6 percent air. Maximum allowable slump will depend on the method of placement but should not exceed 4 inches.

4. Jointing

Joints for concrete pavement should be laid out in a square or rectangular pattern. Joint spacings should not exceed 30 times the thickness of the slab. The joint spacings indicated should accommodate the contraction of the concrete and under these conditions steel reinforcing will not be required. The joints should be approximately one-fourth of the slab's thickness.

H. Preconstruction Meeting

A preconstruction meeting should be held with representatives of the owner, project architect, geotechnical engineer, general contractor, earthwork contractor and other members of the design team to review construction plans, specifications, methods and schedule.

LIMITATIONS

This report has been prepared in accordance with generally accepted soil and foundation engineering practices in the area for the use of the client for design purposes. The conclusions and recommendations included within the report are based on the information obtained from the borings drilled and cone penetration test conducted at the approximate locations indicated on Figure 1 and the data obtained from laboratory testing. Variations in the subsurface conditions may not become evident until additional exploration or excavation is conducted. If the subsurface conditions or groundwater level is found to be significantly different from what is described above, we should be notified to reevaluate our recommendations.

APPLIED GEOTECHNICAL ENGINEERING CONSULTANTS, INC.

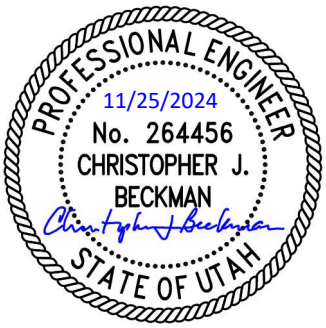

Christopher J. Beckman, P.E.

Reviewed by Douglas R. Hawkes, P.E., P.G.

CJB/rs

REFERENCES

American Society of Civil Engineers (ASCE), 2017 “Minimum design loads and associated criteria for buildings and other structures, provisions" ASCE / SEI 7-16, American Society of Civil Engineers, Reston, Virginia.

International Code Council, 2020; 2021 International Building Code, Falls Church, Virginia.

Salt Lake County, 2002; Surface Rupture and Liquefaction Potential Special Study Areas Map, Salt Lake County, Utah, adopted March 31, 1989, updated March 2002, Salt Lake County Public Works – Planning Divisions, 2001 South State Street, Salt Lake City, Utah.

Utah Geological Survey, 2024; Utah Geological Hazard Portal accessed October 30, 2024, at https://geology.utah.gov/apps/hazards/.

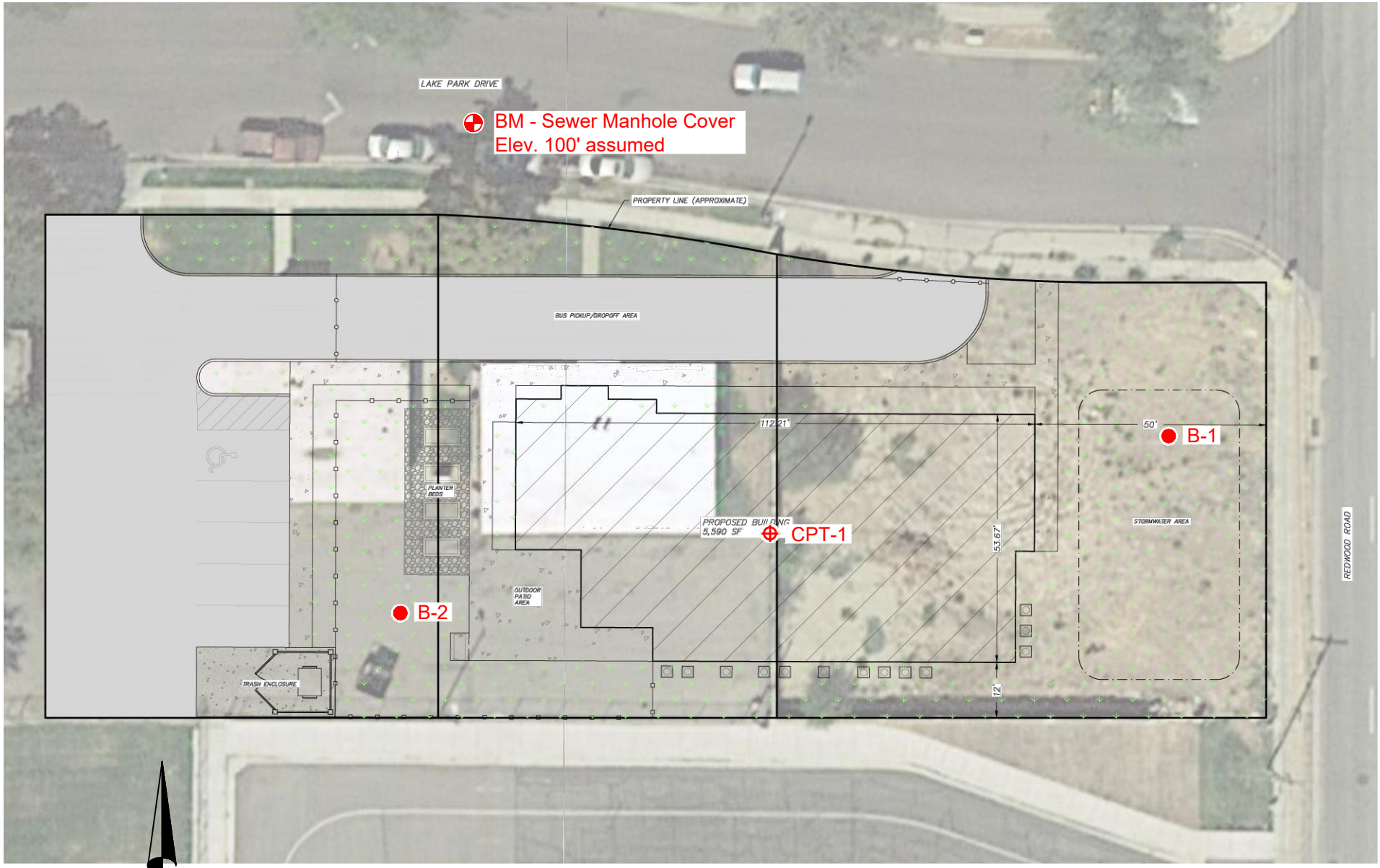

N

0 30 60 feet

Approximate Scale

AIS RESIDENTIAL FACILITY
1739 WEST LAKE PARK DRIVE
WEST VALLEY CITY, UTAH

1240801	AGEC	Exploratory Boring and CPT Locations	Figure 1

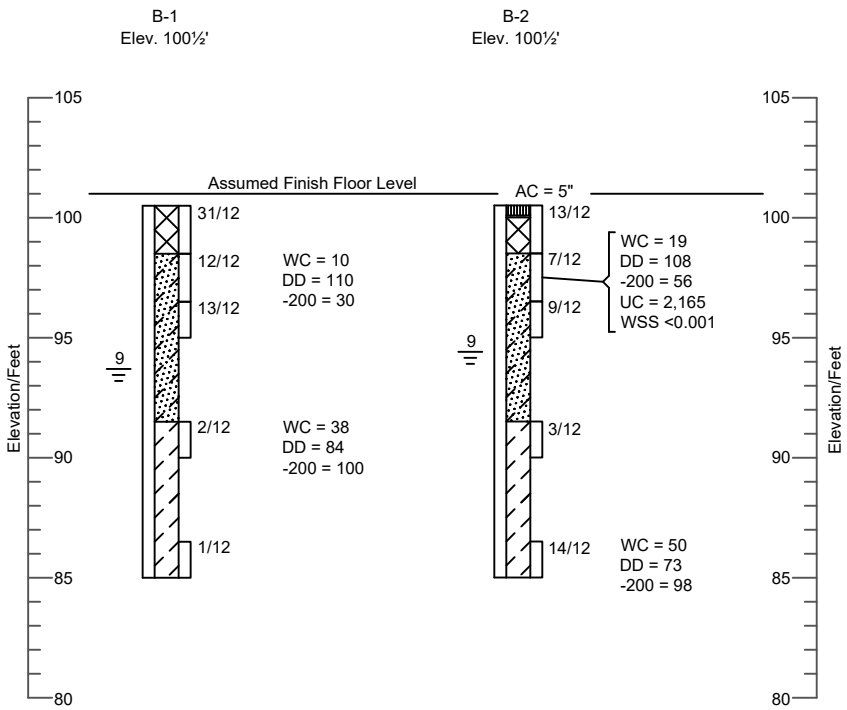

Approximate Vertical Scale 1" = 8'

LEGEND:

Asphaltic Concrete.

Fill; silty sand to clayey gravel with sand, slightly moist to moist, gray to dark brown.

Lean Clay (CL); small amounts of sand, occasional silt layers, soft to medium stiff, wet, grayish brown, slight iron oxide staining.

Clayey Sand (SC); some silty sand and sandy lean clay layers, medium dense/medium stiff, moist to wet, light brown to gray, slight iron oxide staining.

10/12 California Drive sample taken. The symbol 10/12 indicates that 10 blows from a 140 pound automatic hammer falling 30 inches were required to drive the sampler 12 inches.

Indicates slotted 1½ inch PVC pipe installed in the boring to the depth shown.

9 Indicates the depth to free water and the number of days after drilling the measurement was taken.

NOTES:

1. The borings were drilled on November 13, 2024 using direct push.
2. The locations of the borings were measured approximately by pacing from features shown on the site plan provided.
3. The elevations of the borings were measured by automatic level and refer to the benchmark shown on Figure 1.
4. The boring locations and elevations should be considered accurate only to the degree implied by the method used.
5. The lines between materials shown on the boring logs represent the approximate boundaries between material types and the transitions may be gradual.
6. The water level readings shown on the logs were made at the time and under the conditions indicated. Fluctuations in the water will occur with time.
7. WC = Water Content (%);
   DD = Dry Density (pcf);
   -200 = Percent Passing the No. 200 Sieve;
   UC = Unconfined Compressive Strength (psf);
   WSS = Water Soluble Sulfates (%);
   AC = Asphaltic Concrete Thickness;
   BC = Base Course Thickness.

1240801	AGEC	Exploratory Boring Logs, Legend and Notes	Figure 2

Applied Geotechnical Engineering Consultants, Inc.

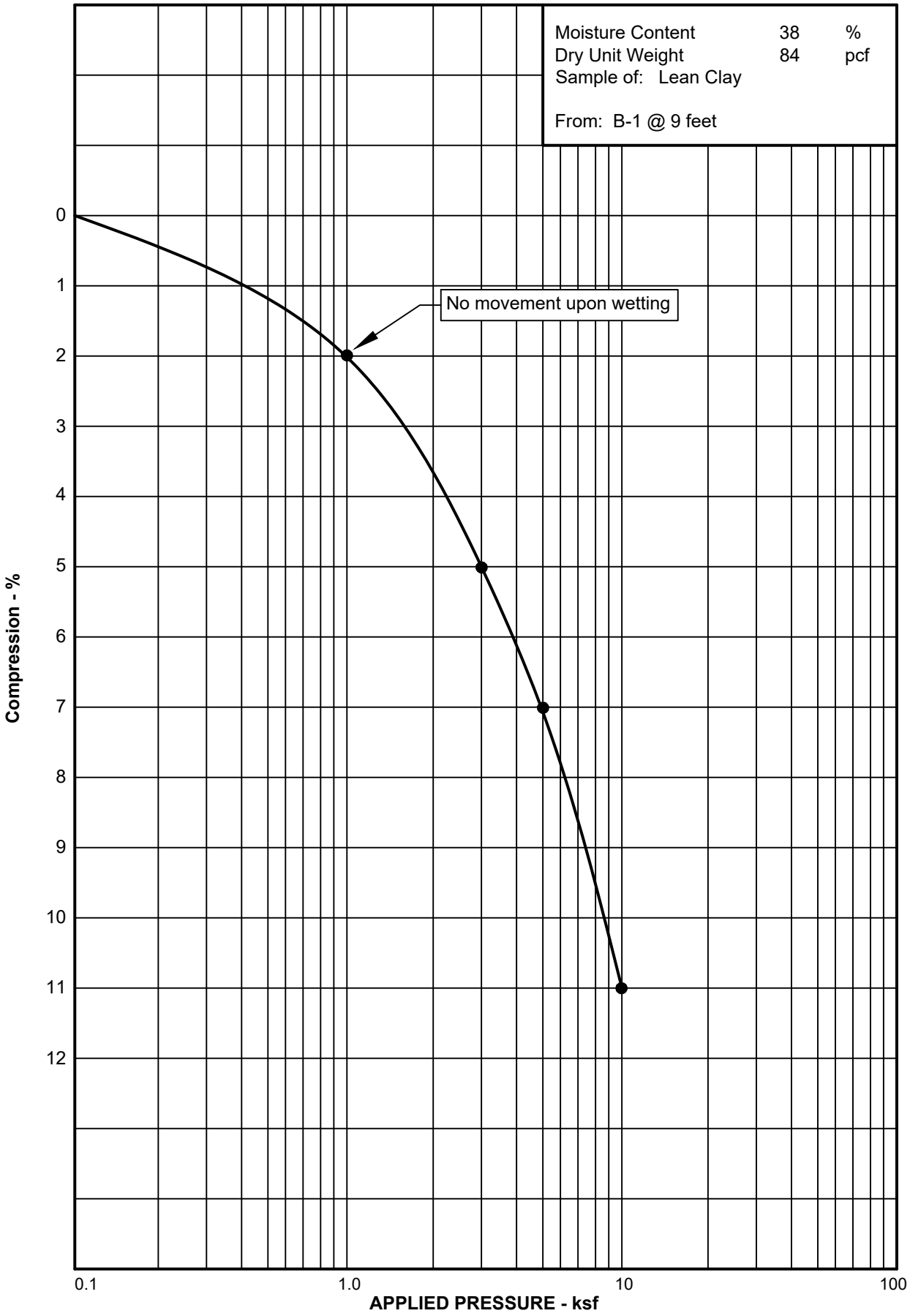

Project No. 1240801 **CONSOLIDATION TEST RESULTS** **Figure 3**

Applied Geotechnical Engineering Consultants, Inc.

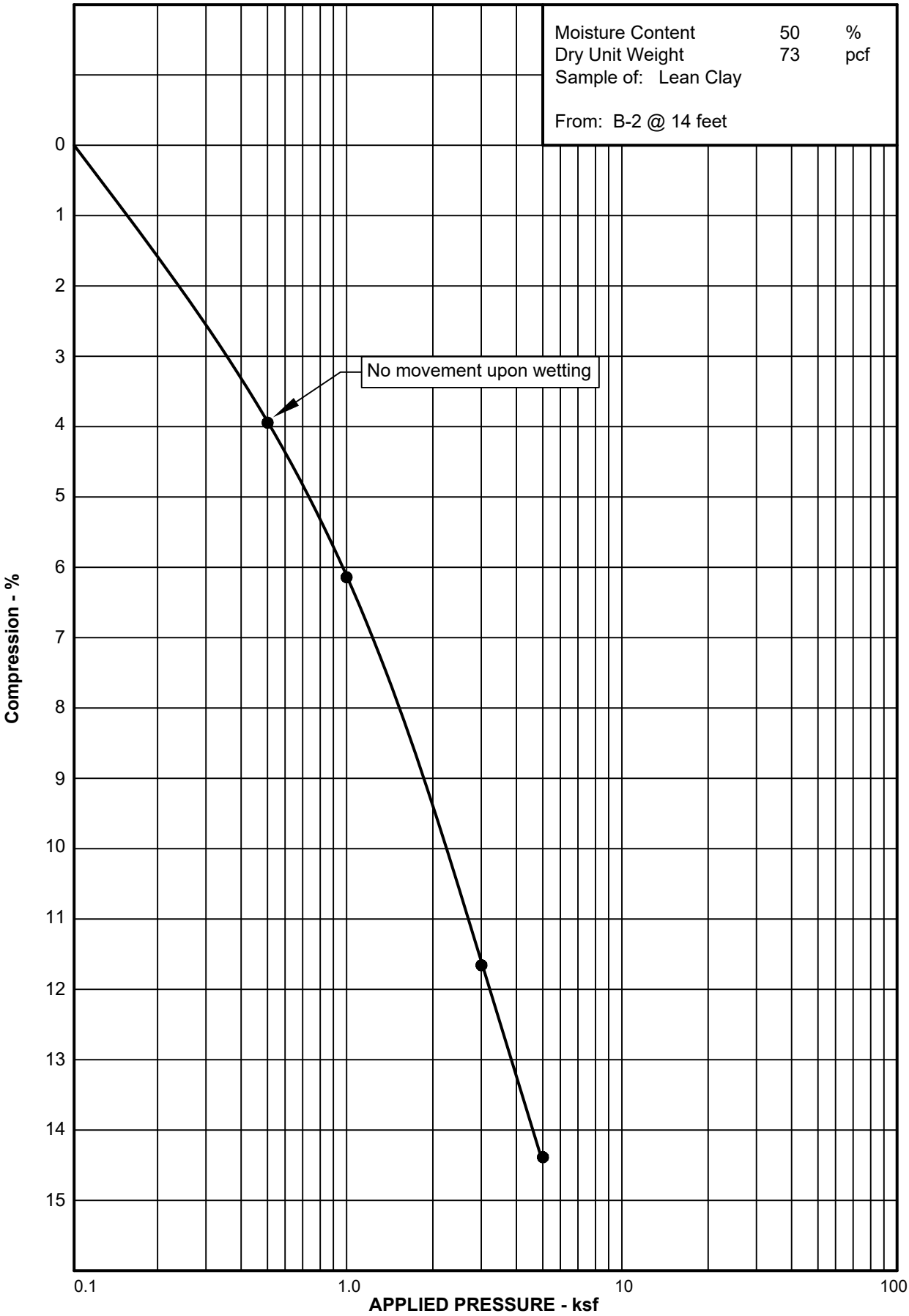

Project No. 1240801 **CONSOLIDATION TEST RESULTS** **Figure 4**

APPLIED GEOTECHNICAL ENGINEERING CONSULTANTS, INC.

TABLE I
SUMMARY OF LABORATORY TEST RESULTS

PROJECT NUMBER: 1240801

SAMPLE LOCATION		NATURAL MOISTURE CONTENT (%)	NATURAL DRY DENSITY (PCF)	GRADATION			ATTERBERG LIMITS		UNCONFINED COMPRESSIVE STRENGTH (PSF)	WATER SOLUBLE SULFATE (%)	SAMPLE CLASSIFICATION
BORING	DEPTH (FEET)			GRAVEL (%)	SAND (%)	SILT/ CLAY (%)	LIQUID LIMIT (%)	PLASTICITY INDEX			
B-1	2	10	110			30					Clayey Sand
	9	38	84			100					Lean Clay
B-2	2	19	108			56			2,165	<0.001	Sandy Lean Clay
	14	50	73			98					Lean Clay

APPENDIX

CONE PENETRATION TEST RESULTS

Applied GeoTech

600 West Sandy Parkway
Sandy, UT 84070

CPT: CPT-1
Total depth: 50.79 ft, Date: 11/13/2024
Surface Elevation: 101.70 ft
Coords: X:0.00, Y:0.00
Cone Type: Nova
Cone Operator: Nathan Salazar and Jason Staker

Project: 1240801
Location: AIS Facility

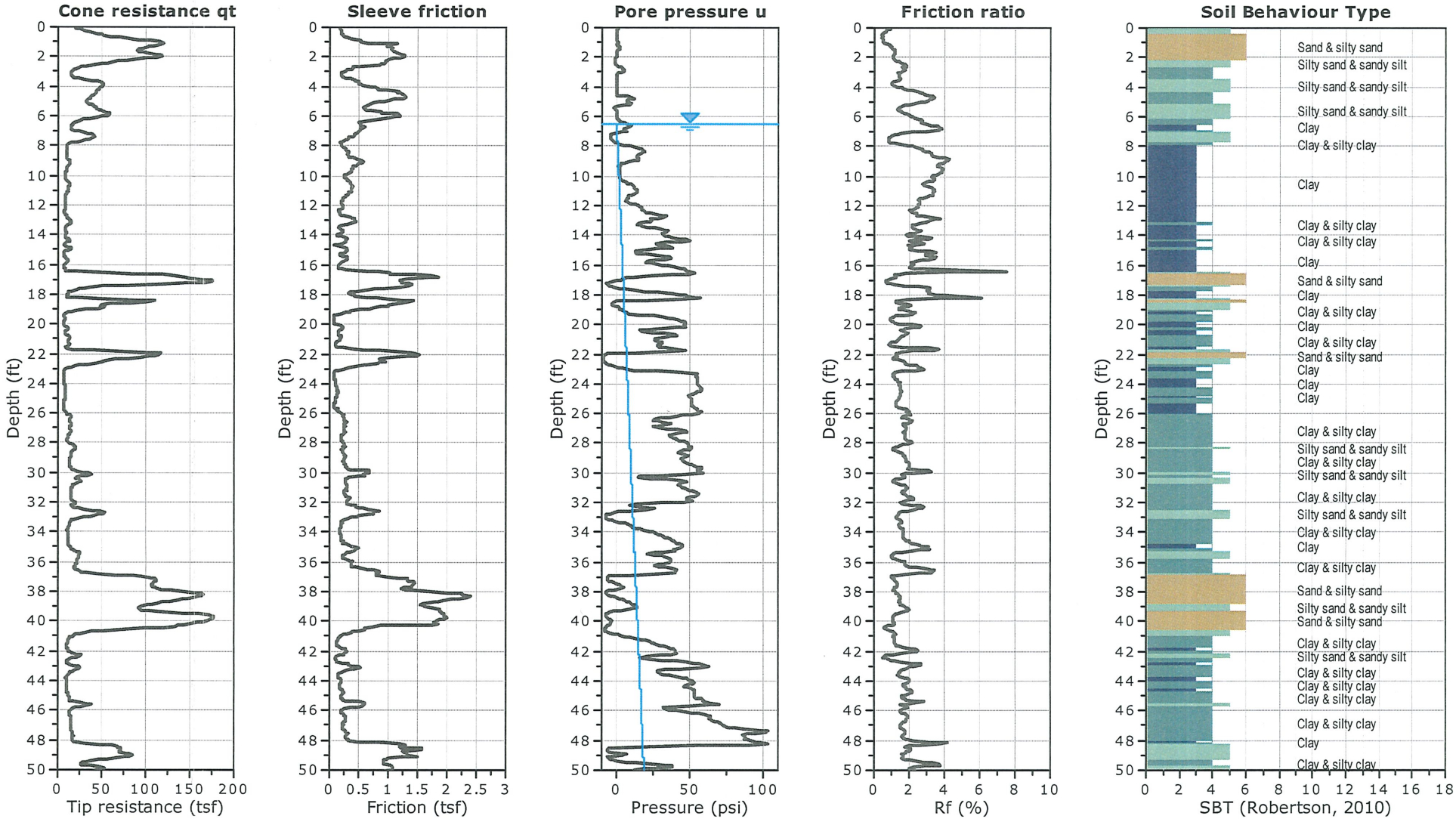

PROJECT MANUAL

AIS Residential Facility

West Valley, Utah

DeKold Architecture

APPENDIX B -
TAX EXEMPT CERTIFICATE

CMGC to Obtain Tax Exemption Certificate

Utah State Tax Commission

Exemption Certificate

(Sales, Use, Tourism and Motor Vehicle Rental Tax)

TC-721
Rev. 5/22

tax.utah.gov

Name of business or institution claiming exemption (purchaser) Work Activity Center, Inc. dba Ability Inclusion Services		Telephone number 801-977-9779	
Street address 1275 W 2320 S	City West Valley City	State UT	ZIP Code 84119
Authorized signature Melynda Epperson	Name (please print) Melynda Epperson	Title Director of Finance	
Name of Seller or Supplier:		Date 5/1/2024	
Sales Tax License Number: 12562048-002-STC		***Required for all exemptions marked with an asterisk (*)***	

The signer of this certificate MUST check the box showing the basis for which the exemption is being claimed.

DO NOT SEND THIS CERTIFICATE TO THE TAX COMMISSION
Keep it with your records in case of an audit.

For purchases by government, Native American tribes and public schools, use form TC-721G.

*☐ **Resale or Re-lease**
I certify I am a dealer in tangible personal property or services that are for resale or re-lease. If I use or consume any tangible personal property or services I purchase tax free for resale, or if my sales are of food, beverages, dairy products and similar confections dispensed from vending machines (see Rule R865-19S-74), I will report and pay sales tax directly to the Tax Commission on my next sales and use tax return.

*☒ **Religious or Charitable Institution**
I certify the tangible personal property or services purchased will be used or consumed for essential religious or charitable purposes. **This exemption can only be used on purchases totaling $1,000 or more, unless the sale is pursuant to a contract between the seller and purchaser.**

☐ **Construction Materials Purchased for Religious and Charitable Organizations**
I certify the construction materials are purchased on behalf of a religious or charitable organization and that they will be installed or converted into real property owned by the religious or charitable organization.
Name of religious or charitable organization: _____
Name of project: _____

*☐ **Fuels, Gas, Electricity**
I certify all natural gas, electricity, coal, coke, and other fuel purchased will be predominantly used for industrial use.

*☐ **Machinery and Equipment and Normal Operating Repair or Replacement Parts Used in a Manufacturing Facility, Mining Activity, Web Search Portal or Medical Laboratory**
I certify the machinery and equipment, normal operating repair or replacement parts, or materials (except office equipment or office supplies) are for use in a Utah manufacturing facility described in SIC Codes 2000-3999 or a NAICS code within NAICS Sector 31-33; in a qualifying scrap recycling operation; in a co-generation facility placed in service on or after May 1, 2006; in the operation of a Web search portal by a new or expanding business described in NAICS Code 518112; in a medical laboratory described in NAICS Code 621511; or in a business described in NAICS 212, Mining (except Oil and Gas), or NAICS 213113, Support Activities for Coal Mining, NAICS 213114, Support Activities for Metal Mining, or NAICS 213115, Support Activities for Nonmetallic Minerals (except Fuels) Mining. For a definition of exempt mining equipment, see Utah Code §59-12-104(14).

*☐ **Machinery and Equipment and Normal Operating Repair or Replacement Parts Used in an Electronic Payment Service**
I certify the machinery and equipment and normal operating repair or replacement parts have an economic life of three years or more and are for use in the operation of an electronic payment service described in NAICS Code 522320.

*☐ **Machinery or Equipment Used by Payers of Admissions or User Fees**
I certify that: (1) the machinery or equipment has an economic life of three or more years and will be used by payers of admissions or user fees (Utah Code §59-12-103(1)(f)); (2) the buyer is in the amusement, gambling or recreation industry (NAICS Subsector 713); and (3) at least 51 percent of the buyer's sales revenue for the previous calendar quarter came from admissions or user fees.

*☐ **Refinery Machinery, Equipment and Normal Repair or Replacement Parts**
I certify the machinery, equipment, normal operating repair parts, catalysts, chemicals, reagents, solutions or supplies are for the use of a refiner who owns, leases, controls or supervises a refinery (see Utah Code §63M-4-701) located in Utah, and beginning on July 1, 2021, annually obtains a valid refiner tax exemption certification from the Office of Energy Development.

*☐ **Pollution Control Facility**
I certify our company has been granted a "Certification of Pollution Control Facilities" as provided for by Utah Code §§19-12-101 - 19-12-305 by either the Air Quality Board or the Water Quality Board. I further certify each item of tangible personal property purchased under this exemption is qualifying.

*☐ **Municipal Energy**
I certify the natural gas or electricity purchased: is for resale; is prohibited from taxation by federal law, the U.S. Constitution, or the Utah Constitution; is for use in compounding or producing taxable energy; is subject to tax under the Motor and Special Fuel Tax Act; is used for a purpose other than as a fuel; is used by an entity exempted by municipal ordinance; or is for use outside a municipality imposing a municipal energy sales and use tax. The normal sales tax exemptions under Utah Code §59-12-104 do not apply to the Municipal Energy Sales and Use Tax.

*☐ **Service Provider Consumables**
I certify the tangible personal property is consumable items purchased by a service provider as described in Utah Code §§59-12-103(1)(b), (f), (g), (h), (i) or (j).

*☐ **Commercial Airlines**
I certify the food and beverages purchased are by a commercial airline for in-flight consumption; or, any parts or equipment purchased are for use in aircraft operated by common carriers in interstate or foreign commerce.

*☐ **Commercials, Films, Audio and Video Tapes**
I certify purchases of commercials, films, prerecorded video tapes, prerecorded audio program tapes or records are for sale or distribution to motion picture exhibitors, or commercial television or radio broadcasters. If I subsequently resell items to any other customer, or use or consume any of these items, I will report any tax liability directly to the Tax Commission.

*☐ **Alternative Energy**
I certify the tangible personal property meets the requirements of UC §59-12-104 and is leased or purchased by or for an alternative energy electricity production facility, a waste energy production facility, or a facility that produces fuel from alternative energy.

*☐ **Electrical Cooperatives**
I certify the tangible personal property will be used for the construction, operation, maintenance, repair or replacement of facilities owned by or constructed for a distribution electrical cooperative or a wholesale electrical cooperative as defined in UC §54-2-1.

*☐ **Locomotive Fuel**
I certify this fuel will be used by a railroad in a locomotive engine. Starting Jan. 1, 2021, all locomotive fuel is subject to a 4.85% state tax.

*☐ **Research and Development of Alternative Energy Technology**
I certify the tangible personal property purchased will be used in research and development of alternative energy technology.

*☐ **Life Science Research and Development Facility**
I certify the purchased: (1) machinery, equipment and normal operating repair or replacement parts have an economic life of three or more years for use in performing qualified research in Utah; or (2) construction materials are for use in the construction of a new or expanding life science research and development facility in Utah.

*☐ **Mailing Lists**
I certify the printed mailing lists or electronic databases are used to send printed material that is delivered by U.S. mail or other delivery service to a mass audience where the cost of the printed material is not billed directly to the recipients.

*☐ **Semiconductor Fabricating, Processing or Research and Development Material**
I certify the fabricating, processing, or research and development materials purchased are for use in research or development, manufacturing, or fabricating of semiconductors.

*☐ **Telecommunications Equipment, Machinery or Software**
I certify these purchases or leases of equipment, machinery, or software, by or on behalf of a telephone service provider, have a useful economic life of one or more years and will be used to enable or facilitate telecommunications; to provide 911 service; to maintain or repair telecommunications equipment; to switch or route telecommunications service; or for sending, receiving, or transporting telecommunications service.

*☐ **Aircraft Maintenance, Repair and Overhaul Provider**
I certify these sales are to or by an aircraft maintenance, repair and overhaul provider for the use in the maintenance, repair, overhaul or refurbishment in Utah of a fixed-wing, turbine-powered aircraft that is registered or licensed in a state or country outside Utah.

*☐ **Ski Resort**
I certify the snow-making equipment, ski slope grooming equipment or passenger rope-ways purchased are to be paid directly with funds from the ski resort noted on the front of this form.

*☐ **Qualifying Data Center**
I certify the machinery, equipment or normal operating repair or replacement parts are: (1) used in a qualifying data center as defined in Utah Code §59-12-102; (2) used in the operations of the qualifying data center or in an occupant's operations in the qualifying data center; and (3) have an economic life of one or more years.

☐ **Leasebacks**
I certify: (1) the leased tangible personal property is part of a sale-leaseback transaction; (2) sales or use tax was paid on the initial purchase; and (3) the leased property will be capitalized and the lease payments will be accounted for as payments made under a financing arrangement.

☐ **Film, Television, Radio**
I certify purchases, leases or rentals of machinery or equipment will be used by a motion picture or video production company for the production of media for commercial distribution.

☐ **Prosthetic Devices**
I certify the prosthetic device(s) is prescribed by a licensed physician for human use to replace a missing body part, to prevent or correct a physical deformity, or support a weak body part. This is also exempt if purchased by a hospital or medical facility. (Sales of corrective eyeglasses and contact lenses are taxable.)

☐ **Out-of-State Construction Materials**
I certify I am taking possession in Utah of tangible personal property that will become part of real property in another state that: (1) does not have sales tax, (2) taxes sales at a lower rate, or (3) does not allow credit for tax paid to Utah. I will report the tax on my next Utah return at a rate equal to the lesser of: (1) the rate in Utah where the property was purchased, or (2) the rate in the state where the tangible personal property is converted to real property if that state allows a credit for tax paid to Utah.

☐ **Agricultural Producer**
I certify the items will be used primarily and directly for commercial farming and qualify for the sales and use tax exemption. **This exemption does not apply to vehicles required to be registered.**

☐ **Tourism/Motor Vehicle Rental**
I certify the motor vehicle being leased or rented will be temporarily used to replace a motor vehicle that is being repaired pursuant to a repair or an insurance agreement; the lease will exceed 30 days; the motor vehicle being leased or rented is registered for a gross laden weight of 12,001 pounds or more; or, the motor vehicle is being rented or leased as a personal household goods moving van. This exemption applies only to the tourism tax (up to 7 percent) and the short-term motor vehicle rental tax (Transportation Corridor Funding – 2.5 percent) – not to the state, local, transit, zoo, hospital, highways, county option or resort sales tax.

☐ **Textbooks for Higher Education**
I certify that textbooks purchased are required for a higher education course, for which I am enrolled at an institution of higher education, and qualify for this exemption. An institution of higher education means: the University of Utah, Utah State University, Utah State University Eastern, Weber State University, Southern Utah University, Snow College, Dixie State University, Utah Valley University, Salt Lake Community College, or the Utah System of Technical Colleges.

*☐ **Direct Mail**
I certify I will report and pay the sales tax for direct mail purchases on my next Utah *Sales and Use Tax Return*.

*** Purchaser must provide sales tax license number in the header on page 1.**

NOTE TO PURCHASER: You must notify the seller of cancellation, modification, or limitation of the exemption you have claimed.

Questions? Email **taxmaster@utah.gov**, or call 801-297-2200 or 1-800-662-4335.

PROJECT MANUAL

AIS Residential Facility

West Valley, Utah

DeKold Architecture

APPENDIX C -
UL ASSEMBLIES

BXUV.M546 -

Design/System/Construction/Assembly Usage Disclaimer

- Authorities Having Jurisdiction should be consulted in all cases as to the particular requirements covering the installation and use of UL Certified products, equipment, system, devices, and materials.
- Authorities Having Jurisdiction should be consulted before construction.
- Fire resistance assemblies and products are developed by the design submitter and have been investigated by UL for compliance with applicable requirements. The published information cannot always address every construction nuance encountered in the field.
- When field issues arise, it is recommended the first contact for assistance be the technical service staff provided by the product manufacturer noted for the design. Users of fire resistance assemblies are advised to consult the general Guide Information for each product category and each group of assemblies. The Guide Information includes specifics concerning alternate materials and alternate methods of construction.
- Only products which bear UL's Mark are considered Certified.

BXUV - Fire Resistance Ratings - ANSI/UL 263 Certified for United States

BXUV7 - Fire Resistance Ratings - CAN/ULC-S101 Certified for Canada

See General Information for Fire-resistance Ratings - ANSI/UL 263 Certified for United States
Design Criteria and Allowable Variances

See General Information for Fire Resistance Ratings - CAN/ULC-S101 Certified for Canada
Design Criteria and Allowable Variances

Design No. M546

February 12, 2020

Unrestrained Assembly Rating — 1 Hr.

Finish Rating - 44 min

This design was evaluated using a load design method other than the Limit States Design Method (e.g., Working Stress Design Method). For jurisdictions employing the Limit States Design Method, such as Canada, a load restriction factor shall be used — See Guide BXUV or BXUV7

*** Indicates such products shall bear the UL or cUL Certification Mark for jurisdictions employing the UL or cUL Certification (such as Canada), respectively.**

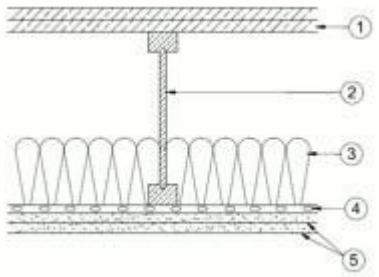

1. **Flooring System —** The flooring system shall consist of one of the following:

System No. 1.

Subflooring — Nom 19/32 in. thick wood structural panels installed perpendicular to the joists with end joints staggered. Plywood or panels secured to joists with construction adhesive and No. 6d ringed shank nails, spaced 12 in. OC along each joist. Staples having equal or greater withdrawal and lateral resistance strength may be substituted for the 6d nails.

Vapor Barrier — (Optional) — Nom 0.030 in. thick commercial asphalt saturated felt.

Finish Floor — Min 1 by 4 in. T & G lumber installed perpendicular to the joists, or min 15/32 in. thick wood structural panels, min grade "Underlayment" or "Single-Floor". Face grain of plywood or strength axis of panel to be perpendicular to joists with joints staggered.

System No. 2

Subflooring — Nom 19/32 in. thick wood structural panels installed perpendicular to the joists with end joints staggered. Plywood or panels secured to joists with construction adhesive and No. 6d ringed shank nails, spaced 12 in. OC along each joist. Staples having equal or greater withdrawal and lateral resistance strength may be substituted for the 6d nails.

Finish Flooring - Floor Topping Mixture* — Min 3/4 in. thickness of floor topping mixture having a min compressive strength of 1100 psi. Mixture shall consist of 6.8 gal of water to 80 lbs of floor topping mixture to 1.9 cu ft of sand.
HACKER INDUSTRIES INC — Firm-Fill Gypsum Concrete, Firm-Fill 2010, Firm-Fill 3310, Firm-Fill 4010, Firm-Fill High Strength and Gyp-Span Radiant

Metal Lath — (Optional) — For use with 3/8 in. (10 mm) floor mat materials, 3/8 in. expanded steel diamond mesh, 3.4 lbs/sq yd placed over the floor mat material. Hacker Floor Primer to be applied prior to the placement of the metal lath. When metal lath is used, floor topping thickness a nom 1-1/4 in. over the floor mat.

Floor Mat Materials* — (Optional) Floor mat material nom 5/64 in. (2 mm) thick adhered to subfloor with Hacker Floor Primer. Primer to be applied to the surface of the mat prior to the placement of a min 1 in. of floor-topping mixture.
ECORE INTERNATIONAL INC — Type QTscu 4002

HACKER INDUSTRIES INC — Type Hacker Sound-Mat.

Alternate Floor Mat Materials — (Optional) — Floor mat material nom 1/4 in. (6 mm) thick adhered to subfloor with Hacker Floor Primer. Primer to be applied to the surface of the mat prior to the placement of a min 1-1/4 in. (32 mm) of floor-topping mixture.
ECORE INTERNATIONAL INC — Type QTrbm 3006-3

HACKER INDUSTRIES INC — Type Hacker Sound-Mat II.

Alternate Floor Mat Materials — (Optional) — Floor mat material nom 1/8 in. (3 mm) thick loose laid over the subfloor. Floor topping thickness shall be a min of 3/4 in. (19 mm)
HACKER INDUSTRIES INC — FIRM-FILL SCM 125

Alternate Floor Mat Materials — (Optional) — Floor mat material nom 1/4 in. (6 mm) thick loose laid over the subfloor. Floor topping thickness shall be a min of 1 in. (25 mm)
HACKER INDUSTRIES INC — Type FIRM-FILL SCM 250, Quiet Qurl 55/025

Alternate Floor Mat Materials — (Optional) — Floor mat material nom 3/8 in. (10 mm) thick loose laid over the subfloor. Floor topping thickness shall be a min of 1-1/4 in. (32 mm)
HACKER INDUSTRIES INC — FIRM-FILL SCM 400, Quiet Qurl 60/040

Alternate Floor Mat Materials — (Optional) — Floor mat material nom 3/4 in. (19 mm) thick loose laid over the subfloor. Floor topping thickness shall be a min of 1-1/2 in. (38 mm)
HACKER INDUSTRIES INC — Type FIRM-FILL SCM 750, Quiet Qurl 65/075

System No. 3

Subflooring — Nom 19/32 in. thick wood structural panels installed perpendicular to the joists with end joints staggered. Plywood or panels secured to joists with construction adhesive and No. 6d ringed shank nails, spaced 12 in. OC along each joist. Staples having equal or greater withdrawal and lateral resistance strength may be substituted for the 6d nails.

Vapor Barrier — (Optional) — Nom 0.030 in thick commercial asphalt saturated felt.

Finish Flooring - Floor Topping Mixture* — Min 3/4 in. thickness of floor topping mixture having a min compressive strength of 1500 psi. Refer to manufacturer's instructions accompanying the material for specific mix design.
MAXXON CORP — Type Maxxon Standard and Maxxon High Strength

Floor Mat Materials* — Floor mat material loose laid over the subfloor. Refer to manufacturer's instructions regarding the minimum thickness of floor topping over each floor mat material.
MAXXON CORP — Type Encapsulated Sound Mat.

Floor Mat Reinforcement — (Optional) Refer to manufacturer's instructions regarding minimum thickness of floor topping for use with floor mat reinforcement.

Metal Lath — (Optional) 3/8 in. expanded galvanized steel diamond mesh, 3.4 lbs/sq yd loose laid over the floor mat material.

Fiber Glass Reinforcement — (Optional) 0.015 in. thick PVC coated non-woven fiberglass mesh, 0.368 lbs./sq. yd loose laid over the floor mat material.

2. **Structural Wood Members —** Min 9-1/2 in. deep "I" shaped wood joists spaced at a max of 24 in. OC. Joists shall conform to ICC-ES ESR-1153 Report. Joist top and bottom chords minimum 1-3/8 in. deep by 2.3 in. wide and constructed of either Microllam laminated veneer lumber (LVL) or TimberStrand laminated strand lumber (LSL). Webs constructed of minimum 3/8 in. thick Performance Plus OSB, PS2, Exposure 1. Installation shall be in accordance with manufacturers published literature.

3. **Insulation —** Min 3-1/2 in. fiberglass or mineral wool insulation bearing the UL Classification Marking for Surface Burning Characteristics, applied within the concealed space, over the resilient or furring channel/gypsum panel.

4. **Resilient Channels —** Formed from 25 MSG galv steel installed perpendicular to the joists. Channels spaced 16 in. OC. Two courses of resilient channel positioned 6 in. OC at gypsum panel butt-joints (3 in. from each end of gypsum board). Channels oriented opposite at gypsum panel butt-joints. Channel splices overlapped 4 in. beneath wood joists. Channels secured to each joist with 1-1/4 in. long Type S screws.

4A. **Steel Framing Members* —** (Optional, Not Shown) — As an alternate to Item 4.

a. **Furring Channels —** Formed of No. 25 MSG galv steel, nominal 2-1/2 in. wide by 7/8 in. deep, spaced 24 in. OC, perpendicular to the joists. Channels secured to Cold Rolled Channels at every intersection with a 3/4 in. TEK screw through each furring channel leg. Ends of adjoining channels overlapped 12 in. and fastened together with two double strand No. 18 SWG galv steel wire ties, one at each end of overlap, or with two 3/4 in. TEK screws in each leg of the overlap section. Two furring channels used at end joints of gypsum board (Item 5), each extending a min of 6 in. beyond both side edges of the board.

b. **Cold Rolled Channels —** 1-1/2 in. by 1/2 in., formed from No. 16 ga. galv steel, positioned vertically and parallel to joists, friction-fitted into the channel caddy on the Steel Framing Members (Item 4Ac) and secured with two 3/4 in. TEK screws. Adjoining lengths of cold rolled channels lapped min. 12 in. and secured along bottom legs with four 3/4 in. TEK screws and wire-tied together with two double strand 18 SWG galv steel wire ties, one at each end of overlap.

c. **Steel Framing Members* —** Spaced 48 in. OC. max along joist, and secured to the joist on alternating joists with two, #10 x 1-1/2 in. screws through mounting holes on the hanger bracket.
PAC INTERNATIONAL L L C — Type RSIC-SI-CRC EZ Clip

4B. **Steel Framing Members* —** (Optional, Not Shown) — As an alternate to Item 3.

a. **Furring Channels —** Formed of No. 25 MSG galv steel, nominal 2-1/2 in. wide by 7/8 in. deep, spaced 24 in. OC perpendicular to joists and friction fit into Steel Framing Members (Item 4Bb). Ends of adjoining channels overlapped 6 in. and tied together with double strand of No. 18 SWG galv steel wire near each end of overlap or with two TEK screws along each leg of the 6 in. overlap. Two furring channels used at end joints of gypsum board (Item 5). Butt joint channels held in place by strong back channels placed upside down, on top of, and running perpendicular to primary furring channels, extending 6 in. longer than length of gypsum side joint. Strong back channels spaced maximum 48 in. OC. Strong back channels secured to every intersection of primary furring channels with four 7/16 in. pan head screws, two along each of the legs at intersections. Butt joint channels run perpendicular to strong back channels and shall be minimum 6 in. longer than length of joint, secured to strong back channels with 7/16 in. pan head screws, two along each of the legs at intersection with strong back channels.

b. **Steel Framing Members* —** Used to attach furring channels (Item 4Ba) to joists. Clips spaced 48 in. OC and secured along joist webs at each furring channel intersection with min. 3/4 in. long self-drilling #10 x 1-1/2 in. screws through each of the provided hole locations. Furring channels are friction fitted into clips.
PAC INTERNATIONAL L L C — Type RSIC-S1-1 Ultra

4C. **Alternate Steel Framing Members* —** (Not Shown) — As an alternate to Item 4, furring channels and Steel Framing Members as described below.

a. **Furring Channels —** Formed of No. 25 MSG galv steel. 2-9/16 in. or 2-23/32 in. wide by 7/8 in. deep, spaced 16 in. OC, perpendicular to joists. Channels secured to joists as described in Item b. Ends of adjoining channels overlapped 6 in. and tied together with double strand of No. 18 SWG galv steel wire near each end of overlap.

b. **Steel Framing Members* —** Used to attach furring channels (Item a) to the wood joists (Item 2). Clips spaced a max of 48 in. OC. RSIC-1 and RSIC-1 (2.75) clips secured to alternating joists with No. 8 x 2-1/2 in. coarse drywall screw through the center grommet. RSIC-V and RSIC-V (2.75) clips secured to alternating joists with No. 8 x 1-1/2 in. coarse drywall screw through the center hole. Furring channels are friction fitted into clips. RSIC-1 and RSIC-V clips for use with 2-9/16 in. wide furring channels. RSIC-1 (2.75) and RSIC-V (2.75) clips for use with 2-23/32 in. wide furring channels. Adjoining channels are overlapped as described in Item a. As an alternate, ends of adjoining channels may be overlapped 6 in. and secured together with two self-tapping No. 6 framing screws, min. 7/16 in. long at the midpoint of

the overlap, with one screw on each flange of the channel. Additional clips required to hold furring channel that supports the gypsum board butt joints.
PAC INTERNATIONAL L L C — Types RSIC-1, RSIC-V, RSIC-1 (2.75), RSIC-V (2.75)

4D. **Alternate Steel Framing Members* —** (Not Shown) — As an alternate to Items 4 and 4C, furring channels and Steel Framing Members as described below.

a. **Furring Channels —** Formed of No. 25 MSG galv steel. 2-3/8 in. wide by 7/8 in. deep, spaced 16 in. OC, perpendicular to joists. Channels secured to joists as described in Item b. Ends of adjoining channels overlapped 6 in. and tied together with double strand of No. 18 SWG galv steel wire near each end of overlap.

b. **Steel Framing Members* —** Used to attach furring channels (Item a) to the wood joists (Item 2). Clips spaced a max of 48 in. OC. Genie Clips secured to alternating joists with No. 8 x 2-1/2 in. coarse drywall screw through the center hole. Furring channels are friction fitted into clips. Additional clips required to hold furring channel that supports the gypsum board butt joints.
PLITEQ INC — Type Genie Clip

4E **Alternate Steel Framing Members* —** (Not Shown) — As an alternate to items 4-4D, furring channels and Steel Framing Members as described below.

a. **Furring Channels —** Formed of No. 25 MSG galv steel, 2-1/2 in. wide by 7/8 in deep, spaced 16 in OC, perpendicular to joists. Channels secured to joists as described in Item b.

b. **Steel Framing Members* —** Used to attach furring channels (Item a) to the wood joists (Item 2). Clips spaced at 48" OC and secured to the bottom of the joists with one 2-1/2 in. Coarse Drywall Screw with 1 in. diam washer through the center hole. Furring channels are then friction fitted into clips. Ends of channels are overlapped 6" and tied together with double strand of No. 18 AWG galvanized steel wire. Additional clips are required to hold the Gypsum Butt joints as described in item 5.
REGUPOL AMERICA — Type SonusClip

5. **Gypsum Board* —** Two layers of 1/2 in. or 5/8 in. thick by 4 ft wide gypsum panels, installed perpendicular to resilient channels (Item 4). The base layer of panels screw-attached to the resilient channels with 1 in. long Type S screws spaced 8 in. OC at the butt joints and 16 in. OC in the field of the panel. At the base layer gypsum board butt joints, each end of each gypsum board shall be supported by a single length of furring channel equal to the width of the gypsum board plus 3 in. on each end. The two support furring channels shall be spaced approximately 3 in. in from joint. The face layer screw-attached to the resilient channels with 1-5/8 in. Type S screws spaced 8 in. OC and 1-1/2 in. Type G screws spaced 8 in. OC at the butt joints located mid-span between resilient channels. Gypsum board butted end joints in individual layers shall be staggered minimum 48 in. OC.
When **Steel Framing Members** (Item 4A) are used, Two layers of 1/2 in. or 5/8 in. thick, 4 ft wide gypsum board, installed as described in Item 5. Adjacent butt joints staggered minimum 48 in. OC.

When **Steel Framing Members** (Item 4B) are used, Two layers of 1/2 in. or 5/8 in. thick, 4 ft wide gypsum board, installed as described in Item 5. Butt joints staggered minimum 24 in. OC.

NATIONAL GYPSUM CO — FSW-C, eXP-C

6. **Finishing System —** Fiber or paper tape embedded in compound over joints and exposed nail heads, covered with compound with edges of compound feathered out.

* Indicates such products shall bear the UL or cUL Certification Mark for jurisdictions employing the UL or cUL Certification (such as Canada), respectively.

The appearance of a company's name or product in this database does not in itself assure that products so identified have been manufactured under UL's Follow-Up Service. Only those products bearing the UL Mark should be considered to be Certified and covered under UL's Follow-Up Service. Always look for the Mark on the product.

UL permits the reproduction of the material contained in the Online Certification Directory subject to the following conditions: 1. The Guide Information, Assemblies, Constructions, Designs, Systems, and/or Certifications (files) must be presented in their entirety and in a non-misleading manner, without any manipulation of the data (or drawings). 2. The statement "Reprinted from the Online Certifications Directory with permission from UL" must appear adjacent to the extracted material. In addition, the reprinted material must include a copyright notice in the following format: "© 2020 UL LLC"

Design/System/Construction/Assembly Usage Disclaimer

- Authorities Having Jurisdiction should be consulted in all cases as to the particular requirements covering the installation and use of UL Certified products, equipment, system, devices, and materials.
- Authorities Having Jurisdiction should be consulted before construction.
- Fire resistance assemblies and products are developed by the design submitter and have been investigated by UL for compliance with applicable requirements. The published information cannot always address every construction nuance encountered in the field.
- When field issues arise, it is recommended the first contact for assistance be the technical service staff provided by the product manufacturer noted for the design. Users of fire resistance assemblies are advised to consult the general Guide Information for each product category and each group of assemblies. The Guide Information includes specifics concerning alternate materials and alternate methods of construction.
- Only products which bear UL's Mark are considered Certified.

BXUV - Fire Resistance Ratings - ANSI/UL 263 Certified for United States
BXUV7 - Fire Resistance Ratings - CAN/ULC-S101 Certified for Canada

See General Information for Fire-resistance Ratings - ANSI/UL 263 Certified for United States
Design Criteria and Allowable Variances

See General Information for Fire Resistance Ratings - CAN/ULC-S101 Certified for Canada
Design Criteria and Allowable Variances

Design No. M563

May 30, 2022

Unrestrained Assembly Rating — 1 Hr

This design was evaluated using a load design method other than the Limit States Design Method (e.g., Working Stress Design Method). For jurisdictions employing the Limit States Design Method, such as Canada, a load restriction factor shall be used — See Guide BXUV or BXUV7

*** Indicates such products shall bear the UL or cUL Certification Mark for jurisdictions employing the UL or cUL Certification (such as Canada), respectively.**

Feedback

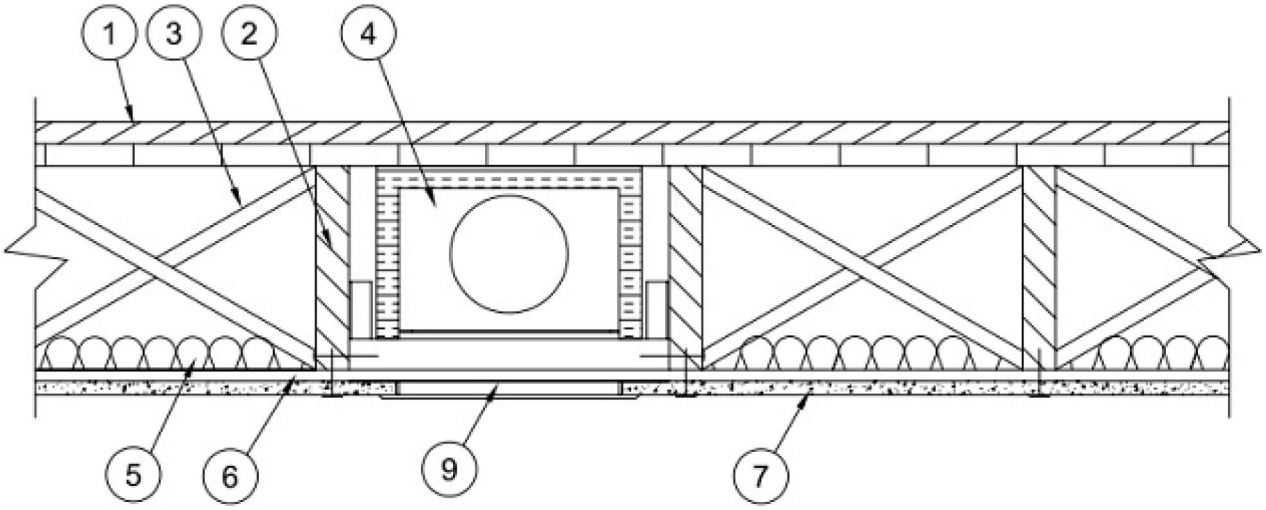

1. **Flooring System** —The flooring system shall consist of one of the following:

System No. 1

Subflooring — Nom 15/32 in. thick wood structural panels installed perpendicular to the joists with end joints staggered. Plywood or panels secured to joists with construction adhesive and No. 6d ringed shank nails, spaced 12 in. OC along each joist. Staples having equal or greater withdrawal and lateral resistance strength may be substituted for the 6d nails.

Vapor Barrier — (Optional) - Nom 0.030 in. thick commercial asphalt saturated felt.

Finish Floor — Min 1 by 4 in. T & G lumber installed perpendicular to the joists, or min 15/32 in. thick wood structural panels, min grade "Underlayment" or "Single-Floor". Face grain of plywood or strength axis of panel to be perpendicular to joists with joints staggered.

System No. 2

Subflooring — Nom 15/32 in. thick wood structural panels installed perpendicular to the joists with end joints staggered. Plywood or panels secured to joists with construction adhesive and No. 6d ringed shank nails, spaced 12 in. OC along each joist. Staples having equal or greater withdrawal and lateral resistance strength may be substituted for the 6d nails.

Vapor Barrier - (Optional) — Nom 0.030 in thick commercial asphalt saturated felt.

Finish Flooring – Any min ¾ in. UL Classified **Floor Topping Mixture** with or without UL Classified **Floor Mat Materials**.

Metal Lath — (Optional) 3/8 in. expanded galvanized steel diamond mesh, 3.4 lbs/sq yd loose laid over the floor mat material. Floor topping thickness shall be min 1-1/2 in.

Fiber Glass Reinforcement — (Optional) 0.015 in. thick PVC coated non-woven fiberglass mesh; 0.368 lbs./sq. yd loose laid over the floor mat material.

2. **Wood Joists** — 2 by 10 in., spaced 16 in. OC, firestopped. Spacing may increase to 24 in. OC when Item 7, Battens, are used.

3. **Cross Bridging —** 1 by 3 in.

4. **Ceiling Damper* — (Optional) —**Max nom area shall be 198 sq in. Max rectangular size shall be 12 in. wide by 16-1/2 in. long. Max height of damper shall be 9-3/8 in. Aggregate damper openings shall not exceed 99 sq in. per 100 sq ft of ceiling area. Damper installed in accordance with the manufacturer's installation instructions provided with the damper. A steel grille (Item 10) shall be installed in accordance with installation instructions.

AIR BALANCE INC — Type 299

AIR KING VENTILATION PRODUCTS — Series FRAS, Series FRAK, Series FRAKV

CENTRAL VENTILATION SYSTEMS CO L L C — Models C-S/R-HC(-A), C-RD-HC(-A)

GREENHECK FAN CORP — Model CRD-1WJ

METAL-FAB INC — Models MSCDHC, MRCDHC

METAL INDUSTRIES INC — Models CD-S/R-HC, CD-S/R-HC-A, CD-RD-HC, CD-RD-HC-A

Feedback

NCA MFG INC — Models CD-S/R-HC, CD-S/R-HC-A, CD-RD-HC, CD-RD-HC-A

BRISK MFG INC — Model BMI-50-CRD-S/R-WT

PRICE INDUSTRIES LTD — Models CD-S/R-HC, CD-RD-HC

RUSKIN COMPANY — Model CFD7

UNITED ENERTECH CORP — Models C-S/R-HC(-A), C-RD-HC(-A)

5. **Batts and Blankets*** — (Optional for item 7) — Glass fiber or mineral wool insulation bearing the UL Classification Marking as to Surface Burning Characteristics and/or Fire Resistance. - When the resilient channels (Item 6) or furring channels (alternates to Item 6) are spaced 16 in. OC, the insulation shall be a max of 3-1/2 in. thick, and shall be secured against the subflooring with staples at 12 in. OC or held suspended in the concealed space with 0.090 in. diam galv steel wires attached to the wood trusses at 12 in. OC. When the resilient channels (Item 6) or furring channels (alternates to Item 6B) are spaced a max of 12 in. OC or when the Steel Framing Members (Item 6A) are used, there is no limit in the overall thickness of insulation, and the insulation can be secured against the subflooring, held suspended in the concealed space or draped over the resilient channels (or Steel Framing Members) and gypsum panel membrane.

5A. **Loose Fill Material or Sprayed Fiber*** — As an alternate to Item 5, when the resilient channels (Item 6) or furring channels (alternates to Item 6) are spaced a max of 12 in. OC or when the Steel Framing Members (Item 6A) are used - Any loose fill material bearing the UL Classification Marking for Surface Burning Characteristics. There is no limit in the overall thickness of insulation.

6. **Resilient Channels** — Nom 1/2 in. deep by 2-3/8 in. wide at the base and 1-3/8 in. wide at the face, formed from 0.020 in. thick galv steel. Installed perpendicular to the wood joists, spaced a max of 24 in. OC when no insulation is fitted in the concealed space. Otherwise, the spacing shall be as specified under Item 5 or 5A. Two courses of resilient channel positioned 6 in. OC at gypsum panel butt-joints (3 in. from each end of panel). Channels oriented opposite at panel butt-joints. Channel splices overlapped 4 in. beneath wood trusses. Channels secured to each truss with 1-1/4 in. long Type S screws.

6A. **Alternate Steel Framing Members —** (Not Shown) — As an alternate to Item 6, main runners, cross tees, cross channels and wall angle as listed below.

a. **Main Runners —**Nom 10 or 12 ft long, 15/16 in. or 1-1/2 in. wide face, spaced 4 ft. OC. Main runners suspended by min 12 SWG galv steel hanger wires spaced 48 in. OC. Hanger wires to be located adjacent to main runner/cross tee intersections. Hanger wires wrapped and twist-tied on 16d nails driven into side of joists at least 5 in. above the bottom face.

b. **Cross Tees —**Nom 4 ft long, 1-1/2 in. wide face, installed perpendicular to the main runners, spaced 16 in. OC. Additional cross tees or cross channels used at 8 in. from each side of butted gypsum panel end joints. The cross tees or cross channels may be riveted, or screw attached to the wall angle or channel to facilitate the ceiling installation.

c. **Cross Channels —**Nom 4 or 12 ft long, installed perpendicular to main runners, spaced 16 in. OC.

d. **Wall Angle or Channel —**Painted or galv steel angle with 1 in. legs or channel with 1 in. legs, 1-9/16 in. deep attached to walls at perimeter of ceiling with fasteners 16 in. OC. To support steel framing member ends and for screw-attachment of the gypsum panels.

CGC INC — Type DGL or RX

USG INTERIORS LLC — Type DGL or RX

6B. **Alternate Steel Framing Members* —** (Not Shown) — As an alternate to Items 6 and 6A, furring channels and Steel Framing Members as described below.

a. **Furring Channels —**Formed of No. 25 MSG galv steel. 2-9/16 in. or 2-23/32 in. wide by 7/8 in. deep, installed perpendicular to the wood joists, spaced a max of 24 in. OC (16 in. OC when Item 7A, Type FSLX is used). Otherwise, the spacing shall be as specified under Item 5 or 5A. Channels secured to joists as described in Item b. Ends of adjoining channels overlapped 6 in. and tied together with double strand of No. 18 SWG galv steel wire near each end of overlap.

b. **Steel Framing Members* —**Used to attach furring channels (Item a) to the wood joists (Item 2). RSIC-1 and RSIC-1 (2.75) clips secured to consecutive joists with No. 8 x 2-1/2 in. coarse drywall screw through the center grommet. RSIC-V and RSIC-V (2.75) clips secured to consecutive joists with No. 8 x 1-1/2 in. coarse drywall screw through the center hole. Furring channels are friction-fitted into clips. RSIC-1 and RSIC-V clips for use with 2-9/16 in. wide furring channels. RSIC-1 (2.75) and RSIC-V (2.75) clips for use with 2-23/32 in. wide furring channels. Adjoining channels are overlapped as described in Item a. As an alternate, ends of adjoining channels may be overlapped 6 in. and secured together with two self-tapping #6 framing screws, min. 7/16 in. long at the midpoint of the overlap, with one screw on each flange of the channel. Additional clips required to hold furring channel that supports the gypsum panel butt joints, as described in Item 8.

PAC INTERNATIONAL L L C — Types RSIC-1, RSIC-V, RSIC-1 (2.75), RSIC-V (2.75).

Feedback

6C. **Alternate Steel Framing Members*** — (Not Shown) — As an alternate to Items 6, 6A and 6B, furring channels and Steel Framing Members as described below.

a. **Furring Channels** —Formed of No. 25 MSG galv steel. 2-3/8 in. wide by 7/8 in. deep, installed perpendicular to the wood joists, spaced a max of 24 in. OC when no insulation is fitted in the concealed space. When insulation, Item 5 is applied over the resilient channel/gypsum panel ceiling membrane, the resilient channel spacing shall be reduced to 12 in. OC (16 in. OC when Item 7A, Type FSLX is used). Channels secured to joists as described in Item b. Ends of adjoining channels overlapped 6 in. and tied together with double strand of No. 18 SWG galv steel wire near each end of overlap.

b. **Steel Framing Members* —**Used to attach furring channels (Item a) to the wood joists (Item 2). GenieClips secured to consecutive joists with No. 8 x 2-1/2 in. coarse drywall screw through the center grommet. When insulation, Item 4, is applied over the resilient channel/gypsum panel ceiling membrane, the clip spacing shall be reduced to 12 in. OC and secured to consecutive trusses. Furring channels are friction-fitted into clips. Adjoining channels are overlapped as described in Item a. As an alternate, ends of adjoining channels may be overlapped 6 in. and secured together with two self-tapping #6 framing screws, min. 7/16 in. long at the midpoint of the overlap, with one screw on each flange of the channel. Additional clips required to hold furring channel that supports the gypsum panel butt joints, as described in Item 6. Not evaluated for use with item 4A.

PLITEQ INC — Type GENIECLIP

6D. **Alternate Steel Framing Members* —** (Not Shown) — As an alternate to items 6-6C, furring channels and Steel Framing Members as described below.

a. **Furring Channels —**Formed of No. 25 MSG galv steel, 2-5/8 in. wide by 7/8 in deep, installed perpendicular to the wood joists, spaced a max of 24 in. OC when no insulation is fitted in the concealed space. When insulation, Item 5 is applied over the resilient channel/gypsum panel ceiling membrane, the resilient channel spacing shall be reduced to 12 in. OC (16 in. OC when Item 7A, Type FSLX is used). Channels secured to joists as described in Item b.

b. **Steel Framing Members* —**Used to attach furring channels (Item a) to the wood joists (Item 2). Clips spaced at 48" OC and secured to the bottom of the joists with one 2 in. Coarse Drywall Screw with 1 in. diam washer through the center hole. When insulation, Item 4, is applied over the resilient channel/gypsum panel ceiling membrane, the clip spacing shall be reduced to 12 in. OC and secured to consecutive trusses Furring channels are then friction fitted into clips. Ends of channels are overlapped 6" and tied together with double strand of No. 18 AWG galvanized steel wire. Additional clips are required to hold the Gypsum Butt joints as described in Item 6.

STUDCO BUILDING SYSTEMS — RESILMOUNT Sound Isolation Clips - Type A237 or A237R

6E. **Steel Framing Members* —** (Optional, Not Shown) — As an alternate to Item 6.

a. **Furring Channels —**Formed of No. 25 MSG galv steel, nominal 2-1/2 in. wide by 7/8 in. deep, spaced as indicated in Item 5, perpendicular to the joists. Channels secured to Cold Rolled Channels at every intersection with a 3/4 in. TEK screw through each furring channel leg. Ends of adjoining channels overlapped 12 in. and fastened together with two double strand No. 18 SWG galv steel wire ties, one at each end of overlap, or with two 3/4 in. TEK screws in each leg of the overlap section. Two furring channels used at end joints of gypsum board (Item 6), each extending a min of 6 in. beyond both side edges of the board.

b. **Cold Rolled Channels —**1-1/2 in. by 1/2 in., formed from No. 16 ga. galv steel, positioned vertically and parallel to joists, friction-fitted into the channel caddy on the Steel Framing Members (Item 6Ec) and secured with two 3/4 in. TEK screws. Adjoining lengths of cold rolled channels lapped min. 12 in. and secured along bottom legs with four 3/4 in. TEK screws and wire-tied together with two double strand 18 SWG galv steel wire ties, one at each end of overlap.

c. **Steel Framing Members* —**Spaced 48 in. OC. max along joist and secured to the joist on alternating joists with two, #10 x 1-1/2 in. screws through mounting holes on the hanger bracket.

PAC INTERNATIONAL L L C — Type RSIC-SI-CRC EZ Clip

Feedback

6F. **Steel Framing Members* —** (Optional, Not Shown) — As an alternate to Item 6.

a. **Furring Channels —**Formed of No. 25 MSG galv steel, nominal 2-1/2 in. wide by 7/8 in. deep, spaced as indicated in Item 5, perpendicular to joists and friction fit into Steel Framing Members (Item 6Fb). Ends of adjoining channels overlapped 6 in. and tied together with double strand of No. 18 SWG galv steel wire near each end of overlap or with two TEK screws along each leg of the 6 in. overlap. Two furring channels used at end joints of gypsum board (Item 7). Butt joint channels held in place by strong back channels placed upside down, on top of, and running perpendicular to primary furring channels, extending 6 in. longer than length of gypsum side

joint. Strong back channels spaced maximum 48 in. OC. Strong back channels secured to every intersection of primary furring channels with four 7/16 in. pan head screws, two along each of the legs at intersections. Butt joint channels run perpendicular to strong back channels and shall be minimum 6 in. longer than length of joint, secured to strong back channels with 7/16 in. pan head screws, two along each of the legs at intersection with strong back channels.

b. **Steel Framing Members* —**Used to attach furring channels (Item 6Fa) to joists. Clips spaced 48 in. OC and secured along joist webs at each furring channel intersection with min. 3/4 in. long self-drilling #10 x 1-1/2 in. screws through each of the provided hole locations. Furring channels are friction fitted into clips.

PAC INTERNATIONAL L L C — Type RSIC-S1-1 Ultra

6G. **Steel Framing Members* —** (Optional - Not Shown) — Used to attach channels (Item 6) to joists (Item 2). Clips spaced 48 in. OC and secured to joists with one No. 8 x 2-1/2 in. coarse drywall screw through center grommet hole. Channels secured to clips with one #10 x 1/2 in. pan-head self-drilling screw. Ends of adjoining channels overlapped 6 in. and secured together with two #8 15 x 1/2 in. Philips Modified screws spaced 2-1/2 in. from the center of the overlap. Gypsum board butt joints require additional resilient channels spaced 1-1/2 in. from the butt joint on either side. One edge of the extra channels will extend to an adjacent joist where it is secured with a clip.

KEENE BUILDING PRODUCTS CO INC — Type RC+ Assurance Clip

6H. **Steel Framing Members* —** (Optional, Not Shown) — Used as an alternate method to attach resilient channels to structural members. A resilient sound isolation accessory shall be used at each attachment point of the resilient channels and spaced max 16 in. O.C. Channel ends butted and centered under the structural members and attached with one accessory at each end. Additional accessories used to hold resilient channels that support the gypsum board end joints. The accessory envelops the mounting edge of the resilient channel. The accessory and resilient channel are fastened to the structural members with the screws supplied with the accessory and per the accessory manufacturer's installation instructions. Gypsum Board butt joints staggered minimum 24 in. OC and Gypsum Board screws spaced 8 in. OC (in lieu of 12 in.) when used.

PAC INTERNATIONAL L L C — Type RC-1 Boost

7. **Gypsum Board* —**Nom 5/8 in. thick, 48 in. wide gypsum panels. When resilient channels (Items 6) are used, gypsum panels installed with long dimension perpendicular to resilient channels. Gypsum panels secured with 1 in. long Type S bugle head steel screws spaced 12 in. OC and located a min of 1/2 in. from side joints and 3 in. from end joints. End joints secured to both resilient channels as shown in end joint detail. When Steel Framing Members (Item 6B, 6C) are used, gypsum panels installed with long dimensions perpendicular to furring channels. Panels attached to the furring channels using 1 in. long Type S bugle-head steel screws spaced 8 in. OC along butted end joints and in the field of the panels. Butted end joints shall be staggered min. 2 ft within the assembly and occur midway between the continuous furring channels. Each end of each gypsum panel shall be supported by a single length of furring channel equal to the width of the gypsum panel plus 6 in. on each end. The two support furring channels shall be spaced approximately 3-1/2 in. OC, and be attached to underside of the joist with one clip at each end of the channel. When Steel Framing Members (Item 5A) are used, gypsum panels installed with long dimension perpendicular to cross tees with side joints centered along main runners and end joints centered along cross tees. Panels fastened to cross tees with 1 in. long Type S bugle-head steel screws spaced 8 in. OC in the field and 8 in. OC along end joints. Panels fastened to main runners with 1 in. long Type S bugle-head steel screws spaced midway between cross tees. Screws along sides and ends of panels spaced 3/8 to 1/2 in. from panel edge. End joints of panels staggered on adjacent panels not less than 12 in.

When **Steel Framing Members** (Item 6D) are used, one layer of nom 5/8 in. thick, 4 ft wide gypsum board is installed with long dimensions perpendicular to furring channels. Gypsum board secured to furring channels with nom 1 in. long Type S bugle-head steel screws spaced 8 in. OC in the field of the board. Gypsum board butted end joints shall be staggered minimum 48 in. and centered over main furring channels. At the gypsum board butt joints, each end of each gypsum board shall be supported by a single length of furring channel equal to the width of the gypsum board plus 3 in. on each end. The two support furring channels shall be spaced approximately 3 in. in from joint. Screw spacing along the gypsum board butt joint and along both additional channels shall be 8 in. OC. Additional screws shall be placed in the adjacent section of gypsum board into the aforementioned 3 in. extension of the extra butt joint channels as well as into the main channel that runs between. Butt joint furring channels shall be attached with one RESILMOUNT Sound Isolation Clip at each end of the channel.

When **Steel Framing Members** (Item 6E) are used, nom 5/8 in. thick, 4 ft wide gypsum board, installed as described in Item 7. Adjacent butt joints staggered minimum 48 in. OC.

When **Steel Framing Members** (Item 6F) are used, nom 5/8 in. thick, 4 ft wide gypsum board, installed as described in Item 7. Butt joints staggered minimum 24 in. OC.

NATIONAL GYPSUM CO — Type FSW-C, eXP-C, FSK-C, FSMR-C

Feedback

7A. **Gypsum Board* (As an alternative to Item 7) —** When used, Resilient Channels (Item 6) or Furring Channels (Item 6B) must be spaced 16 in. OC and Batts and Blankets (Item 5) must be draped over the Resilient Channels (or Steel Framing Members). May also be used with item 5A at same channel spacing. Nom 5/8 in. thick, 48 in. wide gypsum board, installed and secured as described in Item 7 with max screw spacing of 8 in. OC. Butted end joints staggered minimum 4 ft. OC.

NATIONAL GYPSUM CO — Type FSLX

8. **Battens —** Nom 6 by 22-1/2 by 5/8 in. thick pieces of gypsum board (Item 7) centered under subfloor joints and fastened with staples spaced 7 in. OC along each edge. Staples formed of 16 SWG (0.062 in. thick) steel with 1-1/8 in. legs and 1/2 in. crown, driven flush with gypsum board batten strips. The battens and staples are optional when the finish flooring consists of **Floor Topping Mixture***.

9. **Finishing System —** (Not Shown) — Vinyl, dry or premixed joint compound, applied in two coats to joints and screw-heads. Nom 2 in. wide paper tape embedded in first layer of compound over all joints. As an alternate, nom 3/32 in. thick veneer plaster may be applied to the entire surface of gypsum panels.

10. **Grille —** Steel grille, installed in accordance with the installation instructions provided with the ceiling damper.

*** Indicates such products shall bear the UL or cUL Certification Mark for jurisdictions employing the UL or cUL Certification (such as Canada), respectively.**

Last Updated on 2021-08-31

The appearance of a company's name or product in this database does not in itself assure that products so identified have been manufactured under UL Solutions' Follow - Up Service. Only those products bearing the UL Mark should be considered to be Certified and covered under UL Solutions' Follow - Up Service. Always look for the Mark on the product.

UL Solutions permits the reproduction of the material contained in Product iQ subject to the following conditions: 1. The Guide Information, Assemblies, Constructions, Designs, Systems, and/or Certifications (files) must be presented in their entirety and in a non-misleading manner, without any manipulation of the data (or drawings). 2. The statement "Reprinted from Product iQ with permission from UL Solutions" must appear adjacent to the extracted material. In addition, the reprinted material must include a copyright notice in the following format: "©2023 UL LLC."

Feedback

Design No. U305

October 06, 2020

Bearing Wall Rating — 1 Hr

Finish Rating — See Items 3, 3A, 3D, 3E, 3F, 3G, 3H, 3J and 3L.

STC Rating - 56 (See Item 9)

This design was evaluated using a load design method other than the Limit States Design Method (e.g., Working Stress Design Method). For jurisdictions employing the Limit States Design Method, such as Canada, a load restriction factor shall be used — See Guide BXUV or BXUV7

*** Indicates such products shall bear the UL or cUL Certification Mark for jurisdictions employing the UL or cUL Certification (such as Canada), respectively.**

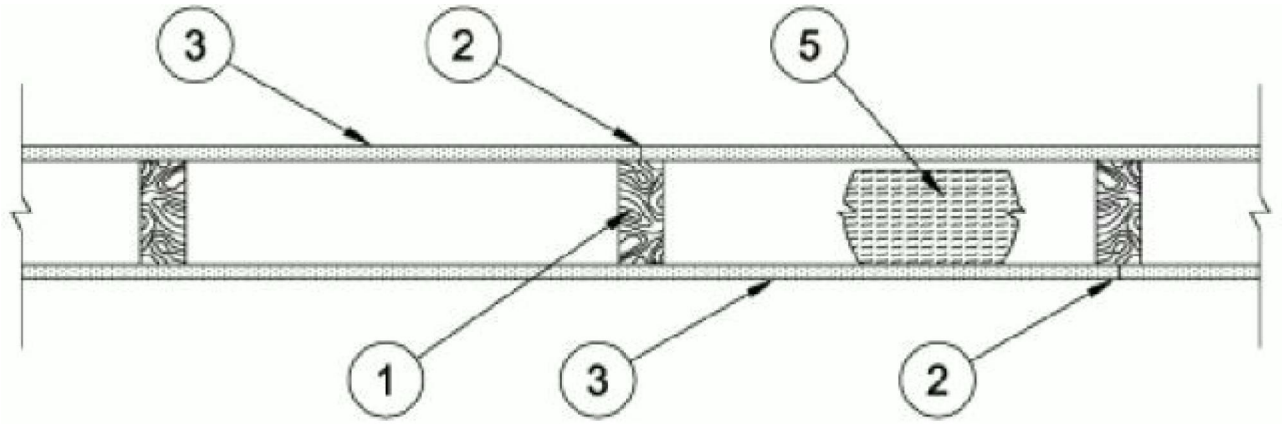

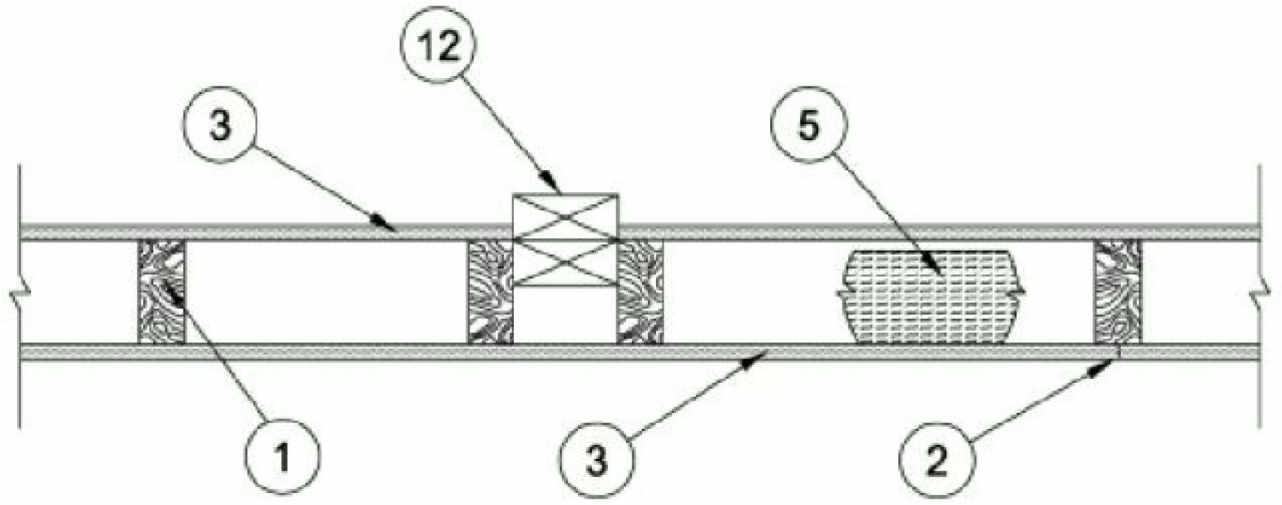

1. **Wood Studs —** Nom 2 by 4 in. spaced 16 in. OC max, effectively firestopped.

2. **Joints and Nail-Heads —** Joints covered with joint compound and paper tape. Joint compound and paper tape may be omitted when square edge boards are used. As an alternate, nom 3/32 in. thick gypsum veneer plaster may be applied to the entire surface of Classified veneer baseboard with the joints reinforced with paper tape. Nailheads exposed or covered with joint compound.

3. **Gypsum Board* —** 5/8 in. thick paper or vinyl surfaced, with beveled, square, or tapered edges, applied either horizontally or vertically. Gypsum panels nailed 7 in. OC with 6d cement coated nails 1-7/8 in. long, 0.0915 in. shank

diam and 15/64 in. diam heads. When used in widths other than 48 in., gypsum panels are to be installed horizontally. For an alternate method of attachment of gypsum panels, refer to Items 6 through 6F, **Steel Framing Members***.

When Items 6, 6B, 6C, 6D, 6E, or 6F, **Steel Framing Members***, are used, gypsum panels attached to furring channels with 1 in. long Type S bugle-head steel screws spaced 12 in. OC.

When Item 6A, **Steel Framing Members***, is used, two layers of gypsum panels attached to furring channels. Base layer attached to furring channels with 1 in. long Type S bugle-head steel screws spaced 12 in. OC. Face layer attached to furring channels with 1-5/8 in. long Type S bugle-head steel screws spaced 12 in. OC. All joints in face layers staggered with joints in base layers. One layer of gypsum board attached to opposite side of wood stud without furring channels as described in Item 3.

When Item 7, resilient channels are used, 5/8 in. thick, 4 ft wide gypsum panels applied vertically. Screw attached furring channels with 1 in. long, self-drilling, self-tapping Type S or S-12 steel screws spaced 8 in. OC, vertical joints located midway between studs.

AMERICAN GYPSUM CO — Types AGX-1(finish rating 23 min.), M-Glass (finish rating 23 min.), Type AGX-11 (finish rating 26 min), Type AGX-12 (finish rating 22 min), Type LightRoc (finish rating 23 min.) or Type AG-C

BEIJING NEW BUILDING MATERIALS PUBLIC LTD CO — Type DBX-1 (finish rating 24 min)

CABOT MANUFACTURING ULC — Type X (finish rating 22 min), 5/8 Type X, Moisture Resistant Type X, Gypsum Sheathing Type X, Mold & Mildew Resistant Type X and Mold & Mildew Resistant AR Type X, Type Blueglass Exterior Sheathing

CERTAINTEED GYPSUM INC — Type C, Type X or Type X-1 (finish rating 26 min); Type EGRG or GlasRoc (finish rating 23 min), GlasRoc-2, Type Habito (finish rating 26 min).

CGC INC — Type AR (finish rating 24 min), Type C (finish rating 24 min), Type IP-AR (finish rating 24 min), Type IPC-AR (finish rating 24 min), Type IP-X1 (finish rating 24 min), Type IP-X2 (finish rating 24 min), Type SCX (finish rating 24 min), Type SHX (finish rating 24 min), Type ULX (finish rating 22 min), Type WRC (finish rating 24 min), Type WRX (finish rating 24 min), Type ULIX (finish rating 20 min)

CONTINENTAL BUILDING PRODUCTS OPERATING CO, L L C — Type LGFC6A (finish rating 34 min), Type LGFC2A, Type LGFC-C/A, Type LGFC-WD, Type LGLLX (finish rating 21 min), Type CLLX (finish rating 24 min)

GEORGIA-PACIFIC GYPSUM L L C — Type 5 (finish rating 26 min), Type 6 (finish rating 23 min), Type 9 (finish rating 26 min), Type C (finish rating 26 min), Type DGG (finish rating 20 min), Type GPFS1 (finish rating 20 min), Type GPFS2 (finish rating 20 min), Type GPFS6 (finish rating 26 min), Type DS, Type DAP, Type DD (finish rating 20 min), Type DA, Type DAPC, Type LS (finish rating 23 min), Type X, Veneer Plaster Base - Type X, Water Rated

- Type X, Sheathing - Type X, Soffit - Type X, Type LWX (finish rating 22 min), Veneer Plaster Base-Type LWX (finish rating 22 min), Water Rated-Type LWX (finish rating 22 min), Sheathing Type-LWX (finish rating 22 min), Soffit-Type LWX (finish rating 22 min), Type DGLW (finish rating 22 min), Water Rated-Type DGLW (finish rating 22 min), Sheathing Type- DGLW (finish rating 22 min), Soffit-Type DGLW (finish rating 22 min), Type LWX (finish rating 22 min), Type LW2X (finish rating 22 min), Veneer Plaster Base - Type LW2X (finish rating 22 min), Water Rated - Type LW2X (finish rating 22 min), Sheathing - Type LW2X (finish rating 22 min), Soffit - Type LW2X (finish rating 22 min), Type DGL2W (finish rating 22 min), Water Rated - Type DGL2W (finish rating 22 min), Sheathing - Type DGL2W (finish rating 22 min)

NATIONAL GYPSUM CO — Type FSK (finish rating 20 min), Type FSK-G (finish rating 20 min), Type FSW (finish rating 20 min), Type FSW-2 (finish rating 24 min), Type FSW-3 (finish rating 20 min), Type FSW-5 (finish rating 22 min), Type FSW-G (finish rating 20 min), Type FSK-C (finish rating 20 min), Type FSW-C (finish rating 20 min), Type FSMR-C, Type FSW-6 (finish rating 20 min), Type FSL (finish rating 24 min), Type FSW-8, Type FSLX (finish rating 21 min), Type RSX (finish rating 26 min).

NATIONAL GYPSUM CO — Riyadh, Saudi Arabia — Type FR, or WR.

PABCO BUILDING PRODUCTS L L C, DBA PABCO GYPSUM — Types C, PG-2 (finish rating 20 min), PG-3 (finish rating 20 min), Types PG-3W, PG-5W (finish rating 20 min), Type PG-4 (finish rating 20 min), Type PG-6 (finish rating 23 min), Types PG-3WS, PG-5WS, PGS-WRS (finish rating 20 min), Types PG-5, PG-9 (finish rating 26 min), PG-11 PG-13 (Nails increased to 2 in.), Type PG-C or PI (finish rating 26 min)

PANEL REY S A — Type GREX, GRIX, PRX, PRC, PRC2; Types RHX, Guard Rey, MDX, ETX (finish rating 22 min), PRX2 (finish rating 21 min)

SIAM GYPSUM INDUSTRY (SARABURI) CO LTD — Type EX-1 (finish rating 26 min)

THAI GYPSUM PRODUCTS PCL — Type C, Type X (finish rating 26 min)

UNITED STATES GYPSUM CO — Type AR (finish rating 24 min), Type C (finish rating 24 min), Type FRX-G (finish rating 29 min), Type IP-AR (finish rating 24 min), Type IPC-AR (finish rating 24 min), Type IP-X1 (finish rating 24 min), Type IP-X2 (finish rating 24 min), Type SHX (finish rating 24 min), Type SCX (finish rating 24 min), Type SGX (finish rating 24 min), Type ULX (finish rating 22 min), Type WRX (finish rating 24 min), Type WRC (finish rating 24 min), Type ULIX (finish rating 20 min)

USG BORAL DRYWALL SFZ LLC — Type SGX (finish rating 24 min).

USG MEXICO S A DE C V — Type AR (finish rating 24 min), Type C (finish rating 24 min), Type WRX (finish rating 24 min), Type WRC (finish rating 24 min), Type IP-X1 (finish rating 24 min), Type IP-X2 (finish rating 24 min), Type SHX (finish rating 24 min), SCX (finish rating 24 min), Type IP-AR (finish rating 24 min), Type IPC-AR (finish rating 24 min), Type ULX (finish rating 22 min)

3A. **Gypsum Board* —** (As an alternate to Item 3) — 5/8 in. thick gypsum panels, with beveled, square, or tapered edges, applied either horizontally or vertically. Gypsum panels fastened to framing with 1-1/4 in. long Type W coarse thread gypsum panel steel screws spaced a max 8 in. OC, with last screw 1 in. from edge of board. When used in widths of other than 48 in., gypsum boards are to be installed horizontally.

AMERICAN GYPSUM CO — Types AGX-1 (finish rating 25 min.), M-Glass (finish rating 25 min.), AG-C (finish rating 25 min.), LighttRoc (finish rating 25 min.)

CERTAINTEED GYPSUM INC — Type C, Type X or Type X-1 (finish rating 26 min)

CGC INC — Type AR (finish rating 24 min), Type C (finish rating 24 min), Type IP-AR (finish rating 24 min), Type IPC-AR (finish rating 24 min), Type IP-X1 (finish rating 24 min), Type IP-X2 (finish rating 24 min), Type SCX (finish rating 24 min), Type SHX (finish rating 24 min), Type WRC (finish rating 24 min), Type WRX (finish rating 24 min)

NATIONAL GYPSUM CO — Type FSW (finish rating 24 min)

UNITED STATES GYPSUM CO — Type AR (finish rating 24 min), Type SCX (finish rating 24 min), Type SGX (finish rating 24 min), Type C (finish rating 24 min), Type WRX (finish rating 24 min), Type WRC (finish rating 24 min), Type IP-X1 (finish rating 24 min), Type IP-X2 (finish rating 24 min), Type SHX (finish rating 24 min), Type FRX-G (finish rating 24 min), Type IP-AR (finish rating 24 min), Type IPC-AR (finish rating 24 min)

USG BORAL DRYWALL SFZ LLC — Types C, SCX, SGX (finish rating 24 min).

USG MEXICO S A DE C V — Type AR (finish rating 24 min), Type C (finish rating 24 min), Type WRX (finish rating 24 min), Type WRC (finish rating 24 min), Type IP-X1 (finish rating 24 min), Type IP-X2 (finish rating 24 min), Type SHX (finish rating 24 min), Type SCX, Type IP-AR (finish rating 24 min), Type IPC-AR (finish rating 24 min)

3B. **Gypsum Board* —** (As an alternate to Item 3) — Nom 3/4 in. thick, installed with 1-7/8 in. long cement coated nails as described in Item 3 or 1-3/8 in. long Type W coarse thread gypsum panel steel screws as described in Item 3A.

CGC INC — Types AR, IP-AR

UNITED STATES GYPSUM CO — Types AR, IP-AR

USG MEXICO S A DE C V — Types AR, IP-AR

3C. **Gypsum Board* —** (As an alternate to Items 3, 3A and 3B) — 5/8 in. thick, 2 ft wide, tongue and groove edge, applied horizontally to one side of the assembly. Installed with 1-7/8 in. long cement coated nails as described in Item 3 or 1-1/4 in. long Type W coarse thread gypsum panel steel screws as described in Item 3A. Joint covering (Item 2) not required.

CGC INC — Type SHX

UNITED STATES GYPSUM CO — Type SHX

USG MEXICO S A DE C V — Type SHX

3D. **Gypsum Board* —** (As an alternate to Items 3, 3A, 3B, or 3C — Not Shown) — For Direct Application to Studs Only- Nom 5/8 in. thick lead backed gypsum panels with beveled, square or tapered edges, applied vertically. Vertical joints centered over studs and staggered min 1 stud cavity on opposite sides of studs. Wallboard secured to studs with 1-5/8 in. long Type W coarse thread gypsum panel steel screws spaced 8 in. OC at perimeter and in the field. Lead batten strips required behind vertical joints of lead backed gypsum wallboard and optional at remaining stud locations. Lead batten strips, min 1-1/2 in. wide, max 10 ft long with a max thickness of 0.125 in. placed on the face of studs and attached to the stud with two 1 in. long Type S-12 pan head steel screws, one at the top of the strip and one at the bottom of the strip. Lead discs or tabs may be used in lieu of or in addition to the lead batten strips or optional at other locations. Max 3/4 in. diam by max 0.125 in. thick lead discs compression fitted or adhered over steel screw heads or max 1/2 in. by 1-1/4 in. by max 0.125 in. thick lead tabs placed on gypsum boards underneath screw

locations prior to the installation of the screws. Lead batten strips to have a purity of 99.9% meeting the Federal specification QQ-L-201f, Grade "C".

RAY-BAR ENGINEERING CORP — Type RB-LBG (finish rating 24 min)

3E. **Gypsum Board* —** (As an alternate to Items 3, 3A, 3B, 3C, and 3D) — 5/8 in. thick gypsum panels, with square edges, applied either horizontally or vertically. Gypsum panels fastened to framing with 1-1/4 in. long Type W coarse thread gypsum panel steel screws spaced a max 8 in. OC, with last 2 screws 1 and 4 in. from edge of board or nailed 7 in. OC with 6d cement coated nails 1-7/8 in. long, 0.0915 in. shank diam and 15/64 in. diam heads. When used in widths of other than 48 in., gypsum boards are to be installed horizontally.

GEORGIA-PACIFIC GYPSUM L L C — Type DGG (finish rating 20 min), GreenGlass Type X (finish rating 23 min)

3F. **Gypsum Board* —** (As an alternate to Items 3, 3A, 3B, 3C, 3D, and 3E) — 5/8 in. glass-mat faced with square edges, applied either horizontally or vertically. Gypsum panels nailed 7 in. OC around the perimeter and in the field with 6d cement coated nails 1-7/8 in. long, 0.0915 in. shank diam and 15/64 in. diam heads. Nails shall be placed 1 inch and 3 inch from horizontal joints and 7 inch OC thereafter.

CGC INC — Type USGX (finish rating 22 min)

UNITED STATES GYPSUM CO — Type USGX (finish rating 22 min.)

USG BORAL DRYWALL SFZ LLC — , Type USGX (finish rating 22 min.)

USG MEXICO S A DE C V — Type USGX (finish rating 22 min.)

3G. **Gypsum Board* —** (As an alternate to Items 3 through 3F) — 5/8 in. thick paper surfaced applied vertically. Gypsum panels nailed 7 in. OC with 6d cement coated nails 1-7/8 in. long, 0.0915 in. shank diam and 15/64 in. diam heads.

GEORGIA-PACIFIC GYPSUM L L C — Type X ComfortGuard Sound Deadening Gypsum Board (finish rating 27 min)

3H. **Gypsum Board* —** (As an alternate to Items 3) — Not to be used with items 6 or 7. 5/8 in. thick paper surfaced applied vertically only. Gypsum panels nailed 7 in. OC with 6d cement coated nails 1-7/8 in. long, 0.0915 in. shank diam and 15/64 in. diam heads.

NATIONAL GYPSUM CO — Type SBWB

3I. **Gypsum Board* —** (As an alternate to Items 3 through 3H, Not Shown) — Nominal 5/8 in. thick, 4 ft wide panels, applied vertically. Panels nailed 7 in. OC with 6d cement coated nails 1-7/8 in. long, 0.0915 in. shank diam and 15/64 in. diam heads. Panel joints covered with paper tape and two layers of joint compound. Nailheads covered with two layers of joint compound.

PABCO BUILDING PRODUCTS L L C, DBA PABCO GYPSUM — Type QuietRock ES (finish rating 20 min)

3J. **Gypsum Board* —** (As an alternate to Item 3) — Not to be used with items 6 or 7. 5/8 in. thick paper surfaced applied vertically or horizontally. Gypsum panels secured per item 3 or 3A.

CERTAINTEED GYPSUM INC — Type SilentFX

3K. **Gypsum Board* —** (As an alternate to Item 3) — 5/8 in. thick gypsum panels, with beveled, square, or tapered edges, applied either horizontally or vertically. Gypsum panels fastened to framing with 1-1/4 in. long Type W coarse thread gypsum panel steel screws spaced a maximum 8 in. OC with the last screw 1 in. from the edge of the board. When used in widths other than 48 in., gypsum panels are to be installed horizontally.

NATIONAL GYPSUM CO — Type FSK (finish rating 20 min), Type FSK-G (finish rating 20 min), Type FSW (finish rating 20 min), Type FSW-2 (finish rating 24 min), Type FSW-3 (finish rating 20 min), Type FSW-5 (finish rating 22 min), Type FSW-G (finish rating 20 min), Type FSK-C (finish rating 20 min), Type FSW-C (finish rating 20 min), Type FSMR-C, Type FSW-6 (finish rating 20 min), Type FSL (finish rating 24 min).

3L. **Gypsum Board* —** (As an alternate to Item 3) — For Direct Application to Studs Only — Nom 5/8 in. thick lead backed gypsum panels with beveled, square or tapered edges, applied vertically. Vertical joints centered over studs and staggered min 1 stud cavity on opposite sides of studs. Wallboard secured to studs with 1-5/8 in. long Type W coarse thread gypsum panel steel screws spaced 8 in. OC at perimeter and in the field. Lead batten strips required behind vertical joints of lead backed gypsum wallboard and optional at remaining stud locations. Lead batten strips, min 2 in. wide, max 10 ft long with a max thickness of 0.140 in. placed on the face of studs and attached to the stud with two 1 in. long Type S-8 pan head steel screws, one at the top of the strip and one at the bottom of the strip. Lead discs, max 5/16 in. diam by max 0.140 in. thick. compression fitted or adhered over the screw heads. Lead batten strips to have a purity of 99.5% meeting the Federal specification QQ-L-201f, Grades "B, C or D".

MAYCO INDUSTRIES INC — "X-Ray Shielded Gypsum"

3M. **Gypsum Board* —** (As an alternate to Items 3) — For Direct Application to Studs Only — For use as the base layer or as the face layer. Nom 5/8 in. thick lead backed gypsum panels with beveled, square or tapered edges, applied vertically. Vertical joints centered over studs and staggered min 1 stud cavity on opposite sides of studs. Wallboard secured to studs with 1-5/8 in. long Type W coarse thread gypsum panel steel screws spaced 8 in. OC at perimeter and in the field when applied as the base layer. When applied as the face layer screw length to be increased to 2-1/2 in. Lead batten strips required behind vertical joints of lead backed gypsum wallboard and optional at remaining stud locations. Lead batten strips, min 2 in. wide, max 8 ft long with a max thickness of 0.14 in. placed on the face of studs and attached to the stud with construction adhesive and two 1 in. long Type S-12 pan head steel screws, one at the top of the strip and one at the bottom of the strip. Lead discs, nominal 3/8 in. diam by max 0.085 in. thick. Compression fitted or adhered over the screw heads. Lead batten strips and discs to have a purity of 99.9% meeting the Federal specification QQ-L-201f, Grade "C". Fasteners for face layer gypsum panels (Items 4, 4A or 4B) when installed over lead backed board to be min 2-1/2 in. Type S-12 bugle head steel screws spaced as described in Item 4.

RADIATION PROTECTION PRODUCTS INC — Type RPP - Lead Lined Drywall

3N. **Gypsum Board* —** (As an alternate to Item 3) — 5/8 in. thick, 4 ft. wide, applied horizontally or vertically with vertical joints centered over studs and staggered one stud cavity on opposite sides of studs. Secured as described in Item 3 or 3A.

CERTAINTEED GYPSUM INC — Easi-Lite Type X (finish rating 24 min), Easi-Lite Type X-2 (finish rating 24 min)

3O. **Wall and Partition Facings and Accessories* —** (As an alternate to Item 3, Not Shown) — Nominal 5/8 in. thick, 4 ft wide panels, applied vertically. Panels nailed 7 in. OC with 6d cement coated nails 1-7/8 in. long, 0.0915 in. shank diam and 15/64 in. diam heads. Panel joints covered with paper tape and two layers of joint compound. Nailheads covered with two layers of joint compound.

PABCO BUILDING PRODUCTS L L C, DBA PABCO GYPSUM — Type QuietRock 527 (finish rating 24 min).

3P. **Gypsum Board* —** (As an alternate to Item 3, Not Shown) — Two layers nom. 5/16 in. thick gypsum panels applied vertically or horizontally. Horizontal edge joints and horizontal butt joints on opposite sides of studs need not be staggered or backed by wood studs. Horizontal joints on the same side between face and base layers need not be staggered. Base layer gypsum panels fastened to studs with 1-1/4 in. long drywall nails spaced 8 in. OC. Face layer gypsum panels fastened to studs with 1-7/8 in. long drywall nails spaced 8 in. OC starting with a 4" stagger.

NATIONAL GYPSUM CO — Type FSW (finish rating 25 min)

3Q. **Gypsum Board* —** (As an alternate to Item 3) — 5/8 in. thick gypsum panels, with beveled, square, or tapered edges, applied either horizontally or vertically. Gypsum panels fastened to framing with 1-1/4 in. long Type W coarse thread gypsum panel steel screws spaced a maximum 10 in. OC with the last two screws 4 and 1 in. from the edges of the board. When used in widths other than 48 in., gypsum panels are to be installed horizontally.

CONTINENTAL BUILDING PRODUCTS OPERATING CO, L L C — Type LGFC6A (finish rating 21 min), Type LGFC2A, Type LGFC-C/A, Type LGFC-WD, Type LGLLX

3R. **Gypsum Board* —** (As an alternate to Item 3. For use with Item 5H) — Any 5/8 in. thick, 4 ft. wide, Gypsum Board listed in Item 3 above. Applied either horizontally or vertically, and screwed to panels with 1-5/8 in. long Type W coarse thread steel screws at 8 in. OC at perimeter and in the field with the last two screws 4 and 3/4 in. from the edges of the board when applied as the base layer. When used in widths other than 48 in., gypsum panels are to be installed horizontally.

3S. **Gypsum Board* —** 3/4 in. thick paper or vinyl surfaced, with beveled, square, or tapered edges, applied either horizontally or vertically. Gypsum panels secured as described in Item 3 with nail length increased to 2 in.

PABCO BUILDING PRODUCTS L L C, DBA PABCO GYPSUM — Type PG-13

3T. **Wall and Partition Facings and Accessories* —** (As an alternate to 5/8 in. thick board as outlined in Item 3) — Nominal 1-3/8 in. thick, 4 ft wide panels, applied vertically or horizontally. Fastened with #6 x 2 in. long drywall screws spaced 8 in. OC along the perimeter and 12 in. OC in the field.

PABCO BUILDING PRODUCTS L L C, DBA PABCO GYPSUM — Type QuietRock 545

3U. **Gypsum Board* —** (As an alternate to Item 3 - For use with Foamed Plastic products, Item 5J) — 5/8 in. thick, 4 ft. wide, applied vertically with vertical joints centered over studs and staggered one stud cavity on opposite sides of studs. Gypsum panels nailed 7 in. OC with 6d cement coated nails 1-7/8 in. long, 0.0915 in. shank diam and 15/64 in. diam heads.

AMERICAN GYPSUM CO — Types AGX-1

BEIJING NEW BUILDING MATERIALS PUBLIC LTD CO — Type DBX-1

CABOT MANUFACTURING ULC — Type X

CERTAINTEED GYPSUM INC — Type X

CGC INC — Type SCX

PANEL REY S A — Type PRX

SIAM GYPSUM INDUSTRY (SARABURI) CO LTD — Type EX-1

THAI GYPSUM PRODUCTS PCL — Type X

UNITED STATES GYPSUM CO — Types SCX and SGX

USG BORAL DRYWALL SFZ LLC — Types SCX and SGX

USG MEXICO S A DE C V — Type SCX

3V. **Gypsum Board* —** (As an alternate to Item 3. For use with Item 5K) — Any 5/8 in. thick, 4 ft. wide, Gypsum Board listed in Item 3 above. Applied vertically with vertical joints centered over studs and staggered one stud cavity on opposite sides of studs. Gypsum panels secured to studs with 1-5/8 in. long Type W coarse thread gypsum panel steel screws spaced 8 in. OC at perimeter and in the field.

4. **Steel Corner Fasteners —** (Optional) — For use at wall corners. Channel shaped, 2 in. long by 1 in. high on the back side with two 1/8 in. wide cleats protruding into the 5/8 in. wide channel, fabricated from 24 gauge galv steel. Fasteners applied only to the end or cut edge (not along tapered edges) of the gypsum board, no greater than 2 in. from corner of gypsum board, max spacing 16 in. OC. Nailed to adjacent stud through tab using one No. 6d cement coated nail per fastener. Corners of wall board shall be nailed to top and bottom plate using No. 6d cement coated nails.

5. **Batts and Blankets* —** (Optional — Required when Item 6A is used (RC-1)) — Glass fiber or mineral wool insulation. Placed to completely or partially fill the stud cavities. When Item 6A is used, glass fiber or mineral wool insulation shall be friction-fitted to completely fill the stud cavities.

CERTAINTEED CORP

JOHNS MANVILLE

KNAUF INSULATION LLC

MANSON INSULATION INC

ROCKWOOL — Types Acoustical Fire Batts and Type AFB, min. density 1.69 pcf / 27.0 kg/m^3

ROCKWOOL MALAYSIA SDN BHD — Type Acoustical Fire Batts

ROCK WOOL MANUFACTURING CO — Delta Board

THERMAFIBER INC — Type SAFB, SAFB FF

5A. **Fiber, Sprayed* —** (Not Shown — Not for use with Item 6) — As an alternate to Batts and Blankets (Item 5) — Spray applied cellulose material. The fiber is applied with water to completely fill the enclosed cavity in accordance with the application instructions supplied with the product with a nominal dry density of 2.7 lb/ft^3. Alternate Application Method: The fiber is applied without water or adhesive at a nominal dry density of 3.5 lb/ft^3, in accordance with the application instructions supplied with the product. When Item 6B is used, Fiber, Sprayed shall be INS735, INS745, INS750LD, INS765LD or INS773LD.

U S GREENFIBER L L C — INS735, INS745 and INS750LD for use with wet or dry application. INS515LD, INS541LD, INS735, INS765LD, and INS773LD are to be used for dry application only

5B. **Fiber, Sprayed* —** (Not Shown - Not for use with Item 6) — As an alternate to Batts and Blankets (Item 5) - Spray applied cellulose insulation material. The fiber is applied with water to interior surfaces in accordance with the application instructions supplied with the product. Applied to completely fill the enclosed cavity. Minimum dry density of 4.3 pounds per cubic ft.

NU-WOOL CO INC — Cellulose Insulation

5C. **Batts and Blankets* —** Required for use with resilient channels, Item 7, 3 in. thick mineral wool batts, friction-fitted to fill interior of wall.

THERMAFIBER INC — Type SAFB, SAFB FF

5D. **Glass Fiber Insulation —** (As an alternate to Item 5C) — 3 in. thick glass fiber batts bearing the UL Classification Marking as to Surface Burning and/or Fire Resistance, friction-fitted to fill the interior of the wall. See **Batts and Blankets** (BKNV or BZJZ) Categories for names of Classified companies.

5E. **Batts and Blankets* —** (Required for use with Wall and Partition Facings and Accessories, Item 3D) — Glass fiber insulation, nom 3-1/2 in. thick, min. density of 0.80 pcf, with a flame spread of 25 or less and a smoke developed of 50 or less, friction-fitted to completely fill the stud cavities. See Batts and Blankets Category (BKNV) for names of manufacturers.

5F. **Fiber, Sprayed* —** (Optional, Not Shown — Not for use with Items 6, 6A, 6B, 6C, or 6D) — As an alternate to Batts and Blankets (Item 5) and Item 5A - Spray applied granulated mineral fiber material. The fiber is applied with adhesive, at a minimum density of 4.0 pcf, to completely fill the enclosed cavity in accordance with the application instructions supplied with the product. See **Fiber, Sprayed** (CCAZ).

AMERICAN ROCKWOOL MANUFACTURING, LLC — Type Rockwool Premium Plus

5G. **Fiber, Sprayed* —** (Optional, Not Shown — Not for use with Items 6, 6A, 6B, 6C, or 6D). — As an alternate to Batts and Blankets (Item 5) and Item 5A - Brown Colored Spray applied cellulose fiber. The fiber is applied with water to completely fill the enclosed stud cavity in accordance with the application instructions supplied with the product. The minimum dry density shall be 4.30 lbs/ft^3.

INTERNATIONAL CELLULOSE CORP — Celbar-RL

5H. **Foamed Plastic* —** (Optional -For use with Item 3R) — Spray applied, foamed plastic insulation, at any thickness from partial fill to completely filling stud cavity.

SES FOAM INC — Nexseal™ 2.0 or Nexseal™ 2.0 LE Spray Foam and Sucraseal Spray Foam.

5I. **Fiber, Sprayed* —** (Not Shown — Not for use with Item 6) — As an alternate to Batts and Blankets (Item 5) - Spray-applied cellulose material. The fiber is applied with water to completely fill the enclosed cavity in accordance with the application instructions supplied with the product. To facilitate the installation of the material, any thin, woven or non-woven netting may be attached by any means possible to the outer face the studs. The material shall reach equilibrium moisture content before the installation of materials on either face of the studs. The minimum dry density shall be 5.79 lbs/ft^3.

APPLEGATE HOLDINGS L L C — Applegate Advanced Stabilized Cellulose Insulation

5J. **Foamed Plastic* —** (Optional, Not Shown - For use with Item 3U) — Spray applied, foamed plastic insulation, at any thickness from partial fill to completely filling stud cavity.

GACO WESTERN L L C — Types GacoEZSpray F4500, GacoProFill FR6500R, Gaco 052N, GacoOnePass F1850, GacoOnePass Low GWP F1880, and Gaco WallFoam 183M

5K. **Foamed Plastic* —** (Optional, Not Shown - For use with Item 3V) — Spray applied, foamed plastic insulation, at any thickness from partial fill to completely filling stud cavity.

CARLISLE SPRAY FOAM INSULATION — SealTite Pro Closed Cell (CC), SealTite Pro Open Cell (OC), SealTite Pro OCX, SealTite Pro No Trim, and SealTite Pro One Zero.

6. **Steel Framing Members* —** (Optional, Not Shown) — Furring channels and Steel Framing Members as described below:

a. **Furring Channels —** Formed of No. 25 MSG galv steel. 2-9/16 in. or 2-23/32 in. wide by 7/8 in. deep, spaced 24 in. OC perpendicular to studs. Channels secured to studs as described in Item b. Ends of adjoining channels are overlapped 6 in. and tied together with double strand of No. 18 SWG galv steel wire near each end of overlap. As an alternate, ends of adjoining channels may be overlapped 6 in. and secured together with two self-tapping #6 framing screws, min. 7/16 in. long at the midpoint of the overlap, with one screw on each flange of the channel. Gypsum board attached to furring channels as described in Item 3.

b. **Steel Framing Members* —** Used to attach furring channels (Item 6a) to studs. Clips spaced 48 in. OC. RSIC-1 and RSIC-1 (2.75) clips secured to studs with No. 8 x 2-1/2 in. coarse drywall screw through the center grommet. RSIC-V and RSIC-V (2.75) clips secured to studs with No. 8 x 1-1/2 in. coarse drywall screw through the center hole. Furring channels are friction fitted into clips. RSIC-1 and RSIC-V clips for use with 2-9/16 in. wide furring channels. RSIC-1 (2.75) and RSIC-V (2.75) clips for use with 2-23/32 in. wide furring channels.

PAC INTERNATIONAL L L C — Types RSIC-1, RSIC-V, RSIC-1 (2.75), RSIC-V (2.75)

6A. **Steel Framing Members* —** (Optional, Not Shown) — Furring channels and Steel Framing Members on one side of studs as described below:

a. **Furring Channels —** Formed of No. 25 MSG galv steel, spaced 24 in. OC perpendicular to studs. Channels secured to studs as described in Item b. Ends of adjoining channels are overlapped 6 in. and tied together with double strand of No. 18 SWG galv steel wire near each end of overlap. Batts and Blankets placed in stud cavity as described in Item 5. Two layers of gypsum board attached to furring channels as described in Item 3.

b. **Steel Framing Members* —** Used to attach furring channels (Item 6Aa) to one side of studs only. Clips spaced 48 in. OC., and secured to studs with two No. 8 x 2-1/2 in. coarse drywall screws, one through the hole at each end of the clip. Furring channels are friction fitted into clips.

KINETICS NOISE CONTROL INC — Type Isomax

6B. **Steel Framing Members* —** (Optional, Not Shown) — Furring channels and Steel Framing Members as described below:

a. **Furring Channels —** Formed of No. 25 MSG galv steel. 2-3/8 in. wide by 7/8 in. deep, spaced 24 in. OC perpendicular to studs. Channels secured to studs as described in Item b. Ends of adjoining channels are overlapped 6 in. and tied together with double strand of No. 18 SWG galv steel wire near each end of overlap.

As an alternate, ends of adjoining channels may be overlapped 6 in. and secured together with two self-tapping #6 framing screws, min. 7/16 in. long at the midpoint of the overlap, with one screw on each flange of the channel. Gypsum board attached to furring channels as described in Item 3.

b. **Steel Framing Members* —** Used to attach furring channels (Item 6Ba) to studs. Clips spaced 48 in. OC. Genie clips secured to studs with No. 8 x 1-1/2 in. coarse drywall screw through the center hole. Furring channels are friction fitted into clips.

PLITEQ INC — Type Genie Clip

6C. **Steel Framing Members* —** (Optional, Not Shown) — Furring channels and Steel Framing Members as described below:

a. **Furring Channels —** Formed of No. 25 MSG galv steel. Spaced 24 in. OC perpendicular to studs. Channels secured to studs as described in Item b. Ends of adjoining channels overlapped 6 in. and tied together with double strand of No. 18 AWG galvanized steel wire. Gypsum board attached to furring channels as described in Item 3.

b. **Steel Framing Members* —** Used to attach furring channels (Item 6Ca) to studs. Clips spaced 48 in. OC., and secured to studs with No. 2 in. coarse drywall screw with 1 in. diam washer through the center hole. Furring channels are friction fitted into clips.

STUDCO BUILDING SYSTEMS — RESILMOUNT Sound Isolation Clips - Type A237 or A237R

6D. **Steel Framing Members* —** (Optional, Not Shown) — Furring channels and Steel Framing Members as described below:

a. **Furring Channels —** Formed of No. 25 MSG galv steel, spaced 24 in. OC, and perpendicular to studs. Channels secured to studs as described in Item b. Ends of adjoining channels overlapped 6 in. and secured in place with a double strand of No. 18 AWG twisted steel wire. Gypsum board attached to furring channels as described in Item 3.

b. **Steel Framing Members* —** Used to attach furring channels (Item 6Da) to studs. Clips spaced 48 in. OC., and secured to studs with No. 8 x 2-1/2 in. coarse drywall screw through the center hole. Furring channels are friction fitted into clips.

REGUPOL AMERICA — Type SonusClip

6E. **Steel Framing Members* —** (Optional, Not Shown) — Resilient channels and Steel Framing Members as described below:

a. **Resilient Channels —** Formed of No. 25 MSG galv steel, spaced 24 in. OC, and perpendicular to studs. Channels secured to studs as described in Item b. Ends of adjoining channels overlapped 6 in. and secured in

place with two No. 8 15 x 1/2 in. Philips Modified Truss screws spaced 2-1/2 in. from the center of the overlap. Gypsum board attached to resilient channels as described in Item 3.

b. **Steel Framing Members* —** Used to attach resilient channels (Item 6Ea) to studs. Clips spaced 48 in. OC., and secured to studs with No. 8 x 2-1/2 in. coarse drywall screw through the center hole. Resilient channels are secured to clips with one No. 10 x 1/2 in. pan-head self-drilling screw.

KEENE BUILDING PRODUCTS CO INC - Type RC+ Assurance Clip

6F. **Steel Framing Members* —** (Optional, Not Shown) — Furring channels and Steel Framing Members as described below:

a. **Furring Channels —** Formed of No. 25 MSG galv steel. 2-23/32 in. wide by 7/8 in. or 1-1/2 in. deep, spaced 24 in. OC perpendicular to studs. Channels secured to studs as described in Item b. Ends of adjoining channels are overlapped 6 in. and tied together with double strand of No. 18 SWG galv steel wire near each end of overlap. As an alternate, ends of adjoining channels may be overlapped 6 in. and secured together with two self-tapping #6 framing screws, min. 7/16 in. long at the midpoint of the overlap, with one screw on each flange of the channel. Gypsum board attached to furring channels as described in Item 3.

b. **Steel Framing Members* —** Used to attach furring channels (Item 6Fa) to studs. Clips spaced 48 in. OC. Clips secured to studs with No. 8 x 2-1/2 in. coarse drywall screw through the center grommet. Furring channels are friction fitted into clips.

CLARKDIETRICH BUILDING SYSTEMS — Type ClarkDietrich Sound Clip

6G. **Steel Framing Members* —** (Optional, Not Shown) — Used as an alternate method to attach resilient channels to wall studs. A resilient sound isolation accessory shall be used at each attachment point of the resilient channels and spaced max 16 in. O.C. Channel ends butted and centered under the structural members and attached with one accessory at each end. Additional accessories used to hold resilient channels that support the gypsum board end joints. The accessory envelops the mounting edge of the resilient channel. The accessory and resilient channel are fastened to the structural members with the screws supplied with the accessory and per the accessory manufacturer's installation instructions.

PAC INTERNATIONAL L L C — Type RC-1 Boost

7. **Furring Channel —** Optional — Not Shown — For use on one side of the wall - Resilient channels, 25 MSG galv steel, spaced vertically 24 in. OC, flange portion screw attached to one side of studs with 1-1/4 in. long diamond shaped point, double lead Phillips head steel screws. When resilient channels are used, insulation, Items 5C or 5D is required.

8. **Caulking and Sealants —** (Not Shown, Optional) — A bead of acoustical sealant applied around the partition perimeter for sound control.

9. **STC Rating —** The STC Rating of the wall assembly is 56 when it is constructed as described by Items 1 through 6, except:

A. Item 2, above — Nailheads Shall be covered with joint compound.

B. Item 2, above — Joints As described, shall be covered with fiber tape and joint compound.

C. Item 5, above — Batts and Blankets* The cavities formed by the studs shall be friction fit with R-19 unfaced fiberglass insulation batts measuring 6-1/4 in. thick and 15-1/4 in. wide.

D. Item 6, above — Steel Framing Members* Type RSIC-1 clips shall be used to attach gypsum board to studs on either side of the wall assembly.

E. Item 8, above — Caulking and Sealants (Not Shown) A bead of acoustical sealant shall be applied around the partition perimeter for sound control.

F. Steel Corner Fasteners (Item 4), Fiber, Sprayed (Items 5A and 5B) and Steel Framing Members (Item 6A), not evaluated as alternatives for obtaining STC rating.

10. **Wall and Partition Facings and Accessories* —** (Optional, Not Shown) — Nominal 1/2 in. thick, 4 ft wide panels, for optional use as an additional layer on one or both sides of the assembly. Panels attached in accordance with manufacturer's recommendations. When the QR-500 or QR-510 panel is installed between the wood framing and the UL Classified gypsum board, the required UL Classified gypsum board layer(s) is/are to be installed as indicated as to fastener type and spacing, except that the required fastener length shall be increased by a minimum of 1/2 in. Not evaluated or intended as a substitute for the required layer(s) of UL Classified Gypsum Board.

PABCO BUILDING PRODUCTS L L C, DBA PABCO GYPSUM — Type QuietRock QR-500 and QR-510

11. **Cementitious Backer Units* —** (Optional Item Not Shown — For Use On Face Of 1 Hr Systems With All Standard Items Required) - 7/16 in., 1/2 in., 5/8 in., 3/4 in. or 1 in. thick, min. 32 in. wide. Applied vertically or horizontally with vertical joints centered over studs. Fastened to studs and runners with cement board screws of adequate length to penetrate stud by a minimum of 3/8 in. for steel framing members, and a minimum of 3/4 in. for wood framing members spaced a max of 8 in. OC. When 4 ft. wide boards are used, horizontal joints need not be backed by framing.

NATIONAL GYPSUM CO — Type DuraBacker, PermaBase, DuraBacker Plus, or PermaBase Plus

12. **Non-Bearing Wall Partition Intersection —** (Optional) —Two nominal 2 by 4 in. studs or nominal 2 by 6 in. studs nailed together with two 3 in. long 10d nails spaced a max. 16 in. OC. vertically and fastened to one side of the minimum 2 by 4 in. stud with 3 in. long 10d nails spaced a max. 16 in. OC. vertically. Intersection between partition wood studs to be flush with the 2 by 4 in. studs. The wall partition wood studs are to be framed by with a second 2 by 4 in. wood stud fastened with 3 in. long 10d nails spaced a max. 16 in. OC. vertically. Maximum one non-bearing wall partition intersection per stud cavity. Non-bearing wall partition stud depth shall be at a minimum equal to the depth of the bearing wall.

13. **Mesh Netting —** (Not Shown) — Any thin, woven or non-woven fibrous netting material attached with staples to the outer face of one row of studs to facilitate the installation of the sprayed fiber from the opposite row.

14. **Mineral and Fiber Board* —** (Optional, Not Shown) — For optional use as an additional layer on one side of wall. Nom 1/2 in. thick, 4 ft wide with long dimension parallel and centered over studs. Attached to framing with 2 in. long Type W steel screws, spaced 12 in. OC. The required UL Classified gypsum board layer(s) is/are to be installed as

indicated as to fastener type and spacing, except that the required fastener length shall be increased by a minimum of 1/2 in. Not evaluated or intended as a substitute for the required layer(s) of UL Classified Gypsum Board.

HOMASOTE CO — Homasote Type 440-32

14A. **Mineral and Fiber Board* —** (Optional, Not Shown) — For use with Items 14B-14E) — For optional use as an additional layer on one side of wall. Nom 1/2 in. thick, 4 ft wide with long dimension parallel and centered over studs. Attached to framing with minimum 1-3/8 in. long ring shanked nails or 1-1/4 in. long Type W steel screws, spaced 12 in. OC along board edges and 24 in. OC in field of board along intermediate framing. Not evaluated or intended as a substitute for the required layer(s) of UL Classified Gypsum Board.

HOMASOTE CO — Homasote Type 440-32

14B. **Glass Fiber Insulation —** (For use with Item 14A) — 3-1/2 in. thick glass fiber batts bearing the UL Classification Marking as to Surface Burning and/or Fire Resistance, placed to fill the interior of the wall. See Batts and Blankets (BKNV or BZJZ) categories for names of Classified companies.

14C. **Batts and Blankets* —** (As an alternate to Item 14B, For use with Item 14A), 3 in. thick mineral wool batts, placed to fill interior of wall, attached to the 3-1/2 in. face of the studs with staples placed 24 in. OC.

THERMAFIBER INC — Type SAFB, SAFB FF

14D. **Adhesive —** (For use with Item 14A) — Construction grade adhesive applied in vertical, serpentine, nominal 3/8 in. wide beads down the length of both vertical edges of Mineral and Fiber Board (Item 14A).

14E. **Gypsum Board* —** (For use with Item 14A) — 5/8 in. thick, 4 ft wide, applied vertically over Mineral and Fiber Board (Item 14A) with vertical joints located anywhere over stud cavities. Secured to mineral and fiber boards with 1-1/2 in. Type G Screws spaced 8 in. OC along edges of each vertical joint and 12 in. OC in intermediate field of the Mineral and Fiber Board (Item 14A). Secured to outermost studs and bearing plates with 2 in. long Type S screws spaced 8 in. OC. Gypsum Board joints covered with paper tape and joint compound. Screw heads covered with joint compound. Finish Rating 30 Min.

AMERICAN GYPSUM CO — Type AG-C

CERTAINTEED GYPSUM INC — Type C

CGC INC — Types C, IP-X2, IPC-AR

CONTINENTAL BUILDING PRODUCTS OPERATING CO, L L C — Type LGFC-C/A

GEORGIA-PACIFIC GYPSUM L L C — Types 5, DAPC, TG-C

NATIONAL GYPSUM CO — Types FSK-C, FSW-C

PABCO BUILDING PRODUCTS L L C, DBA PABCO GYPSUM — Type PG-C

PANEL REY S A — Type PRC

THAI GYPSUM PRODUCTS PCL — Type C

UNITED STATES GYPSUM CO — Types C, IP-X2, IPC-AR

USG BORAL DRYWALL SFZ LLC — Type C

USG MEXICO S A DE C V — Types C, IP-X2, IPC-AR

14F. **Mineral and Fiber Board —** (Optional, Not Shown) — For optional use as an additional layer on one side of wall - Nom 1/2 in. thick, 4 ft wide, square edge fiber boards applied vertically to studs on one side of the wall in between the wood studs and the UL Classified Gypsum Board (Item 3). Fiber boards installed with 1-1/4 in. long, Type W, bugle head, coarse thread gypsum board screws spaced 12 in. OC max, with the last screws spaced 2 in. and 6 in. from edge of board. Gypsum board (Item 3) installed as indicated as to fastener type and spacing, except that the required fastener length shall be increased by a minimum of 1/2 in. Not evaluated or intended as a substitute for the required layer(s) of UL Classified Gypsum Board.

BLUE RIDGE FIBERBOARD INC — SoundStop

*** Indicates such products shall bear the UL or cUL Certification Mark for jurisdictions employing the UL or cUL Certification (such as Canada), respectively.**

Last Updated on 2020-10-06

NO. XXXXX

SUBCONTRACT AGREEMENT

THIS SUBCONTRACT AGREEMENT ("Subcontract") by and between GRAMOLL CONSTRUCTION COMPANY, a Utah corporation, hereinafter referred to as "Contractor," and **(SUBCONTRACTOR NAME & ADDRESS) hereinafter referred to as "Subcontractor,"** is entered into and shall be effective as of the date it has been signed by both parties hereto (the "Subcontract Date"). If Subcontractor commences work prior to signing this Subcontract, the Subcontract Date shall be deemed to be the date Subcontractor commenced the Work.

RECITALS

1. Contractor has entered into a contract with **[PROJECT OWNER]** for the construction, performance and completion of a certain project known as **[PROJECT TITLE]** said contract being hereinafter referred to as the "General Contract".

2. Subcontractor desires to furnish, and Contractor desires to have Subcontractor furnish a portion of the work for Contractor. Contractor and Subcontractor desire to establish the terms and conditions that govern the relationship between them when Subcontractor furnishes such labor, materials, and equipment pursuant to this Subcontract.

ARTICLE I

1.1 **Scope of Work.** Subcontractor shall furnish all labor, materials, permits, tools, machinery, equipment, facilities, supplies and services, pay all applicable taxes, and comply with any and all additional requirements imposed by the jurisdiction in which the work is performed, and to do all things necessary to complete the following items of work under the General Contract (the "Work"):

Furnish all labor, materials, equipment and supervision required to complete all [LABOR TYPE] work required, as described in specifications sections [SECTION NUMBER & DESCRIPTION] and as shown on the drawings in [BID PACKAGE] and comply with all other sections of the specifications and the drawings dated [DATE], for [PROJECT NAME] prepared by [ARCHITECT], as related to such work.

Addenda:

Alternates:

Includes:

Excludes:

Hereinafter, all such documents, plus this Subcontract and the General Contract are collectively referred to as the "Subcontract Documents." All Subcontract Documents other than this Subcontract are incorporated herein by reference and hereby adopted and made a part of this Subcontract as fully as if it were set forth in full herein, subject to the limitations set forth in Article I hereof. All General, Supplemental General, and Special Conditions of the specifications and all terms and conditions of the General Contract shall apply to this Subcontract, except where ambiguous or inconsistent with this Subcontract, in which case the provisions of this Subcontract shall control. Subcontractor acknowledges that the Work to be performed by Subcontractor is not confined to any particular portion of the drawings or section of the specifications but may be scattered throughout those documents. In the performance of this Subcontract, Subcontractor binds itself to Contractor to comply fully with all undertakings and obligations of the Contractor to the extent that they apply to the scope of the Work.

ARTICLE II

2.1 **Subcontract Price.** Contractor shall pay Subcontractor for completion of the Work in accordance with the Subcontract Documents the lump sum of **[SUBCONTRACT PRICE]** (the "Subcontract Price.") The Subcontract Price includes all costs and expenses to perform the Work, and associated with the performance of the Work, including, without limitation, (1) all applicable transportation charges, costs and expenses, and (2) all applicable taxes including, without limitation, applicable taxes under any law now existing, or which may

SAMPLE

hereafter be adopted by federal, state, local or other governmental authorities, taxing the labor, materials, or equipment furnished, or any other tax levied as a result of performance of the Work. The Subcontract Price may be adjusted only as provided for in Article V.

ARTICLE III

3.1 **Independent Contractor.** The relationship of Subcontractor to Contractor during the term of this Subcontract shall be that of an independent contractor. Subcontractor shall take any and all actions necessary to maintain that independent contractor relationship throughout the term of the Subcontract, and neither Subcontractor nor its employees shall be considered employees of Contractor. Subcontractor shall exercise exclusive control for the means, methods, techniques, and procedures in performance of the Work.

3.2 **Examination of Subcontract Documents/ Site.** Subcontractor has examined the Subcontract Documents and the applicable Laws and Regulations, as that term is defined below, and has examined the site of the work and satisfied itself as to all conditions to be encountered in the performance of the Work. Subcontractor enters this Subcontract on the basis of its own examination, investigation and evaluation of all such matters, and not in reliance on the opinions or representations of Contractor or Owner. If there are any inconsistencies between the Subcontract Documents or ambiguities in any Subcontract Document, Subcontractor shall bring such inconsistencies or ambiguities to the attention of Contractor before the execution of this Subcontract; otherwise, Subcontractor shall be bound by Contractor's resolution of such inconsistencies or ambiguities.

In the event of any discrepancy (1) in the Subcontract Documents, or (2) between the Subcontract Documents and the Laws and Regulations, those which are more stringent, provide persons and property with greater protection, or provide for a better product shall govern. In the event of any discrepancy in the Subcontract Documents between dimensions and measurements for the Work based on scaling, the Work shall comply with the dimensions for such Work. Subcontractor shall promptly notify Contractor in writing of any such discrepancy. To the extent that the Subcontract Documents include plans, specifications or other documents that depict, refer or relate to mechanical, plumbing, electrical or fire protection systems, such documents are diagrammatic only, and are not intended to show the precise alignment, physical locations, or configurations of such Work. The Subcontract Price includes all costs and expenses for such systems to be installed such that they clear all obstructions, permit proper clearances for the Work of other trades, and present an orderly appearance.

Before commencing Work, Subcontractor will satisfy itself as to the location of all utilities that may affect or interfere with Subcontractor's Work. Subcontractor will fully protect all utilities, and keep them operating at all times, unless otherwise provided in the Subcontract Documents. Subcontractor shall take such field measurements as are necessary for the proper execution of its work. It shall be assumed that the Subcontractor has fully accepted the work of others as being satisfactory and he shall be fully responsible thereafter for the satisfactory performance of the work covered by this Agreement, regardless of the defective work of others.

3.3 **Lines, Levels, Dimensions and Measurements.** Subcontractor assumes full responsibility for the proper interpretation and interpolation of all lines, levels, dimensions, and measurements and their relation to benchmarks, property lines, reference lines and the work of Contractor and other trades. In all cases where dimensions are governed by conditions already established, the responsibility for correct knowledge of the condition's rests entirely on Subcontractor. The Work shall comply with the dimensions provided in the Subcontract Documents and shall not be performed based on scales indicated in those documents. No variations from specified lines, levels or dimensions shall be made except on prior written approval of Contractor clearly setting forth the variation.

3.4 **Shop Drawings/ Submittals.** Shop drawings and submittals shall be provided in a minimum of one (1) digital copy to Contractor's office in North Salt Lake. Additional copies shall be provided if required by the Subcontract Documents. Shop drawings and/ or submittals and/ or samples are due within fourteen (14) days of Subcontract's date of issuance. At the time of submission, Subcontractor shall clearly identify in writing any deviation in its shop drawings/ submittals/ samples from the requirements of the Subcontract Documents and must receive from Contractor specific written approval for any deviation.

SAMPLE

3.5 **Warranty.** Subcontractor warrants that:

3.5.1 all materials and equipment furnished under this Subcontract will be of good quality and new, unless otherwise required or permitted by the Subcontract Documents.

3.5.2 the materials and equipment provided as part of the Work will be suitable for the purposes intended in the Subcontract Documents.

3.5.3 the Work will be performed in a good and workmanlike manner.

3.5.4 the Work will conform to the requirements of the Subcontract Documents; and

3.5.5 the Work will be free from defects.

Work not conforming to these requirements including, without limitation, substitutions not properly approved and authorized, shall be considered defective (all such work, "Defective Work"). Subcontractor shall (1) execute any special guarantees, and (2) assign to Contractor all warranties, as required by the Subcontract Documents.

3.6 **Correction and Replacement of Defective Work.** During performance of the Work, Subcontractor shall promptly correct or replace Defective Work. Contractor shall determine whether Work is defective and whether work performed by Subcontractor to correct or replace Defective Work complies with Subcontractor's warranty obligations.

3.6.1 If, within the greater of (1) the period established in the Subcontract Documents, or (2) one year after the Completion Date, (hereinafter the "Warranty Period"), any of Subcontractor's Work is found to be defective, Subcontractor shall correct or replace it promptly after receipt of written notice of the Defective Work. If Contractor prefers to accept, rather than correct or repair Defective Work, Contractor may, in its sole discretion, accept the work subject to its right of reimbursement, as set forth below.

3.6.2 Subcontractor shall pay all costs to correct or replace Defective Work without any adjustment to the Subcontract Price or Subcontract Time. If Subcontractor fails to correct Defective Work within the time allowed by Contractor, or if no time is specified, a reasonable time after receipt of notice of such defects, Contractor may correct or replace the Defective Work. Subcontractor shall reimburse Contractor for (1) the costs to correct or replace defective Work, including, without limitation, the costs of additional sampling, testing and inspections, if any, made necessary by Defective Work, corrections or replacements, (2) all Losses that Contractor incurs that arise out of or result from Defective Work, (3) any amounts assessed and collected by Owner from Contractor for acceptance of Defective Work, and (4) any other amounts for which Subcontractor is responsible at law or in equity.

3.7 **Safety.** Subcontractor shall initiate, maintain and supervise all safety precautions, measures, policies and programs, training and inspections in connection with the Work including, without limitation, such precautions and programs as necessary to comply with those required or recommended by O.S.H.A., Governmental, or Quasi-Governmental authorities having jurisdiction and by the Contractor and Owner. This shall include but not be limited to, requirements imposed by the Subcontract Documents. Subcontractor shall provide copies of all Safety Meeting and Training Notes on a weekly basis or as required by Contractor. Subcontractor shall take all necessary precautions to prevent damage, injury or loss to (a) all persons performing the Work or who may be affected by the Work; and (b) all Work, whether stored on or off the Project site. Subcontractor shall promptly report to Contractor all accidents incidental to the Work which result in death or injury to persons or in damage to property. Subcontractor shall provide to Contractor any reasonable documentation requested by Contractor related to any such death, injury, damages.

If the Subcontractor, or its Sub-Contractors or their employees performing work on this Project, are found to be in violation of any O.S.H.A. regulation or standard, and such violation results in a fine or assessment being assessed against the Contractor, without fault on its part, the cost of such fines or other damages will be deducted from the funds due and payable to the Sub-Contractor. Any balance not paid through monies due the Sub-Contractor shall be paid by the Sub-Contractor.

SAMPLE

3.8 **Compliance with Laws and Regulations.** Subcontractor shall comply with and give all notices required by all federal, state, local, and municipal laws, regulations, codes, ordinances, and orders that directly or indirectly bear on the Work and/or the performance of the Work including, without limitation:

3.8.1 building codes and ordinances.

3.8.2 worker's compensation laws and regulations.

3.8.3 safety laws, codes, regulations and orders, including, without limitation, the Occupational Safety & Health Act of 1970, as enacted and amended, and regulations issued under that act.

3.8.4 environmental laws including, without limitation, the Comprehensive Environmental Response, Compensation and Liability Act, the Clean Water Act, the Clean Air Act, and the Resources Conservation and Recovery Act, as enacted and amended, regulations issued under those acts, and counterpart state laws.

3.8.5 wage, hour, labor, and anti-discrimination laws, including, without limitation, the Equal Employment Opportunity (EEO) Executive Order 11246, Title VII of the Civil Rights Act of 1964, the Age Discrimination in Employment Act of 1967, the Equal Pay Act of 1963, the Family and Medical Leave Act, the Americans with Disabilities Act, the National Labor Relations Act, the Fair Labor Standards Act; Sections 503 and 504 of the Rehabilitation Act of 1973, Section 402 of the Vietnam Era Veterans Readjustment Assistance Act of 1974, the Immigration Reform Control Act of 1986, as enacted and amended, and all regulations issued under those acts and Gramoll Constructions Harassment Prevention Policy.

3.8.6 tax laws and regulations; all as enacted and amended, and all regulations issued under such acts

Collectively, these are referred to in this Subcontract as the "Laws and Regulations."

3.9 **Subcontractors.** Subcontractor shall not assign this contract, in part or in whole, without Contractor's prior written consent, nor shall Subcontractor assign any monies due or to become due to it hereunder, without Contractor's prior written consent. Subcontractor shall, upon request from Contractor at the inception of this Subcontract, provide to Contractor or supplier a written list of sub-subcontractors or suppliers that Subcontractor intends to use in connection with the performance of its obligations under this Subcontract where the dollar amount individually or in the aggregate with the same sub-subcontractor will exceed 5% of the Subcontract Price. Subcontractor shall require all of its sub-subcontractors to comply with the Subcontract Documents to the extent that they apply to the scope of work of such sub-subcontractor. Subcontractor shall not change sub-subcontractors without prior written approval of Contractor.

Upon Contractor's request, Subcontractor agrees to provide documentation evidencing full payment of all sub-subcontractors and/or suppliers engaged by Subcontractor with respect to its performance of this Subcontract.

If this Subcontract is terminated, each of Subcontractor's contracts for performance of the Work shall be assigned to Contractor, provided that Contractor accepts such assignment in writing and assumes all rights and obligations of Subcontractor pursuant to each such contract.

3.10 **Cleanup.** Subcontractor will continuously clean, and remove from the jobsite, its debris and excess materials and at the end of each day will leave its working areas in broom-clean condition. Also, he shall clean up to the satisfaction of the inspectors, all dirt, grease marks, etc., from walls, ceilings, floors, fixtures, etc., deposited or placed thereon as a result of the execution of this Subcontract. If Subcontractor fails to do so, Contractor may perform the cleanup and backcharge Subcontractor for the cost of performing such clean-up.

3.11 **Supervision.** Subcontractor shall have available on the project, at all times, a qualified superintendent, who is acceptable to Contractor, to coordinate the Subcontractor's work with that of the Contractor and of the other subcontractors, and any instruction given by the Contractor to said representative on the project shall have the same force and effect as if given to the Subcontractor either at the project or at the Subcontractor's office away from the project site.

SAMPLE

ARTICLE IV

4.1 **Subcontract Time.** Subcontractor shall commence and complete the Work in accordance with the most current schedule prepared by Contractor, as may be revised from time to time during the course of the Project (the "Project Schedule"). Subcontractor shall commence and complete all activities in compliance with the time periods expressly provided for such activities in the Project Schedule. The periods of time provided in the Project Schedule for commencement and final completion of all activities that comprise the Work shall constitute the "Subcontract Time." Except as otherwise expressly noted, as used herein and in the Project Schedule, the term "day" shall refer to a calendar day. The date on which all the work performed by Contractor and its subcontractors is completed and accepted by the Owner shall be referred to hereinafter as the "Completion Date."

Subcontractor's commencement, prosecution, and completion of the Work in the Subcontract Time and in compliance with the Project Schedule is of the essence of this Subcontract.

Subcontractor acknowledges that the precise time periods scheduled for its performance are estimates only. Subcontractor shall cooperate with Contractor in scheduling and performing its work to avoid conflict or interference with the work of Contractor or other trades. Contractor reserves the right, in its sole discretion, to extend or to delay the scheduling of Subcontractor's work if such extension or delay becomes necessary in the opinion of Contractor. Each Subcontractor shall review the schedule of all items of work other than his own, to anticipate completion of specific items of its Work as it affects other trades, to be certain that work following Subcontractor's Work is not delayed. In the event of any conflicts in the Project Schedule between the work of Subcontractor and Contractor or another trade, Contractor shall determine, in its sole discretion, which work shall have precedence and how the parties will coordinate their respective work. All other work not specifically scheduled shall be coordinated as necessary to avoid delaying Work as scheduled. Subcontractor shall not be entitled to an adjustment in the Subcontract Price or the Subcontract Time based on the coordination of such activities with Contractor or any determination by Contractor concerning coordination of the work.

If Contractor determines, in its sole discretion, that Subcontractor has failed to diligently prosecute the Work in accordance with the Project Schedule, or that Subcontractor will not complete the Work within the Subcontract Time, Contractor may, in its sole discretion, (1) require Subcontractor to work overtime and/or use such additional labor and equipment as necessary to accelerate the Work and bring Subcontractor's performance into compliance with the Project Schedule, (2) supplement Subcontractor's work by furnishing additional labor and equipment to the Project as necessary to accelerate the Work and bring Subcontractor's performance into compliance with the Project Schedule, (3) require Subcontractor to provide reasonable assurances of timely performance in accordance with the Project Schedule, (4) terminate this Subcontract pursuant to Article X, and/ or (5) exercise all other rights and remedies available under this Subcontract. Subcontractor shall not be entitled to an adjustment in the Subcontract Price or the Subcontract Time as a result of any such action by Contractor.

ARTICLE V

5.1 **Changes and Modifications to Subcontract.** Without invalidating the Subcontract and without notice to any surety, Contractor may, at any time or from time to time, order additions, deletions or revisions in the Work or acceleration of the Work. Any such additions, deletions, revisions, or acceleration shall be binding upon Contractor and Subcontractor exclusively when made in writing executed by an officer of Gramoll Construction Company. Upon receipt of such an order, Subcontractor shall promptly proceed with the Work involved, which shall be performed under the applicable conditions of this Subcontract and the Subcontract Documents, except as otherwise specifically provided. Subcontractor shall not proceed to perform changes in the Work without prior written authorization from Contractor as provided herein. Subcontractor shall not be entitled to an adjustment in the Subcontract Price or the Subcontract Time for any work performed without such prior written authorization. Except as provided in this Article V or Section 12.1, the terms and conditions of this Subcontract are not otherwise subject to addition, modification, or change.

5.2 **Claims.** The Subcontract Price and the Subcontract Time may be changed only by a written directive by Contractor, change order, or written Amendment to this Subcontract signed by an officer of Gramoll Construction Company. Within seven (7) working days of an occurrence or event giving rise to a claim for a adjustment in the Subcontract Price or Subcontract Time, Subcontractor shall provide to Contractor written notice (hereinafter, a "Claim") stating the nature of the Claim and the adjustment in Subcontract Price and Subcontract Time requested, accompanied by supporting documentation. All Claims shall include and/ or be accompanied by the following supporting information and/ or documents: (a) the specific amount of the

SAMPLE

requested adjustment in the Subcontract Price, if any, (b) the specific number of days' adjustment in the Subcontract Time requested, if any, (c) the reasons justifying the request for an adjustment in the Subcontract Price and the Subcontract Time, including a CPM analysis demonstrating a critical path delay for any requested adjustment in the Subcontract Time, if any, (d) the party or parties whose orders, decisions, acts or omissions give rise to the requested adjustment in the Subcontract Price and/ or the Subcontract Time, and (e) a revised schedule based on the requested adjustments in the Subcontract Time, if any.

A Claim shall be deemed to include all adjustments in Subcontract Price and/ or Subcontract Time to which the claimant is entitled as a result of the occurrence or events giving rise to the Claim. No Claim by Subcontractor for an adjustment of the Subcontract Price or Subcontract Time will be valid if not delivered to the Contractor within the seven (7) working day period prescribed above. Subject to Contractor's right to terminate Subcontractor's rights under this Subcontract, Subcontractor shall continue performance of its obligations under this Subcontract notwithstanding any dispute between Contractor and Subcontractor concerning a Claim asserted by either party.

Subcontractor's sole and exclusive right to an adjustment in the Subcontract Price and/ or the Subcontract Time shall be the adjustment in the contract price and/ or the contract time to the General Contract actually received by Contractor from Owner on behalf of Subcontractor as a result of any such Claim. Subcontractor shall not be entitled to any adjustment in the Subcontract Price or the Subcontract Time or any other remedy under this Subcontract or remedy for breach thereof as a result of any event, occurrence, or act or omission of Contractor or Owner beyond such adjustment in the contract price and/or the contract time to the General Contract received by Contractor from Owner. Receipt by Contractor of a fully-executed written change order from Owner is a condition precedent to Subcontractor's right, if any, to an adjustment in the Subcontract Price and/ or the Subcontract Time, a remedy under this Subcontract, or remedy for breach of this Subcontract. Subcontractor's right to recover for such change, remedy, or breach shall be limited to the adjustment in contract price and/ or contract time received by Contractor from Owner for such change, remedy, or breach.

5.3 **Delays** If events, occurrences, acts, or omissions beyond the control of Subcontractor including, without limitation, the work of other trades or contractors, fire, earthquake, acts of God, terrorist acts, riots, war, strikes or other force majeure events delay Subcontractor's Work, the Subcontract Time and/ or the Subcontract Price will be adjusted to the extent of any adjustment in the contract price and/ or the contract time in the General Contract received by Contractor from Owner on behalf of Subcontractor. Subcontractor may make a Claim for an adjustment in the Subcontract Time and/ or the Subcontract Price if, and only if, Subcontractor timely presents to Contractor a Claim in compliance with Section 5.2. Any such adjustment in the contract price and/ or the contract time under the General Contract received by Contractor from Owner shall be Subcontractor's sole and exclusive remedy for such delays, if any, to Subcontractor's Work on the Project. Receipt by Contractor of a fully executed written change order from Owner is a condition precedent to Subcontractor's right, if any, to an adjustment in the Subcontract Price and/ or the Subcontract Time for delays of any kind or nature.

The Subcontract Time and the Subcontract Price shall not be adjusted and Subcontractor shall not be entitled to any remedy under this Subcontract, or for breach of this Subcontract for (a) delays caused concurrently by Subcontractor and Contractor, Owner or any other person, or (b) any other delays to Subcontractor's Work on the Project for any other events, occurrences, acts or omissions of any person or entity or of any other kind or nature other than that for which an adjustment in the Subcontract Price and/ or the Subcontract Time are expressly authorized in this Section.

5.4 **Subcontractor-Caused Delays.** Subcontractor recognizes and acknowledges that Contractor will suffer substantial Losses if Subcontractor fails to perform the Work in compliance with the Project Schedule. Subcontractor shall indemnify and hold Contractor harmless from and against any and all Losses and liquidated damages that are attributable to or caused by Subcontractor's failure to perform the Work in compliance with the Project Schedule. In addition to liquidated damages, such Losses may include, without limitation, direct jobsite overhead costs such as costs for project management and supervision, quality control, utilities, and other costs such as home office overhead, attorneys' and other professional fees, and other usual and customary mark-ups. If Contractor incurs Losses and/ or is assessed liquidated damages as a result of delays caused concurrently by Subcontractor and other trades or contractors, such Losses and/ or liquidated damages shall be pro rated by Contractor, in its sole discretion, between Subcontractor and all other responsible parties. Contractor's allowing Subcontractor to proceed with Work beyond the time specified for Subcontractor's performance of that Work shall not constitute a waiver of any rights by Contractor to recover damages for Subcontractor's delay.

ARTICLE VI

6.1 **Payment.** Contractor shall pay Subcontractor in monthly payments of 95% percent of the work performed in any preceding month, in accordance with estimates prepared by Subcontractor. **All such pay estimates shall be made on the sample form provided, entitled "Subcontractor's Application for Payment."** Contractor has the unfettered right, at its discretion, to adjust Subcontractor's statements to reflect any overestimation of the percent of work complete made by Subcontractor in a pay estimate.

6.2 **Pay-If-Paid.** When such pay estimates are approved by Contractor and/ or the Owner, Contractor will pay Subcontractor as payments are received by Contractor from the Owner covering the monthly pay estimates of the Contractor, including the approved portion of Subcontractor's monthly pay estimate.

All payments to Subcontractor will be made only from a special fund, namely, from payments made by Owner to Contractor in respect of work performed by Subcontractor. No payments will be made to Subcontractor unless that fund comes into existence. Owner's payment to Contractor for Subcontractor's Work is an express condition precedent to Contractor's obligation to make any payment to Subcontractor.

6.3 **Delayed Pay Estimate/ Retainage.** If the Subcontractor fails to submit a timely request for payment in an amount approved by Contractor, Subcontractor's payment may be delayed. Contractor shall have the right to withhold from any payment the percentage of retention set forth in the General Contract between Contractor and the Owner, but in no case less than five percent of all amounts due Subcontractor until the project is fully completed and accepted by the architect or Owner, and Contractor has received final payment from the Owner.

6.4 **Payroll Summaries/ Prevailing Wages.** Subcontractor agrees to furnish to Contractor one copy of each weekly payroll summary within seven days after the date of payment. Subcontractor agrees to comply with any and all provisions in the General Contract relating to labor standards, minimum wages and other wage and hour provisions to the same extent as they are binding upon Contractor. In the event the Owner requires Contractor to furnish payroll affidavits, subcontractor agrees to furnish similar affidavits to the Contractor.

6.5 **Withholding.** Contractor may withhold payment to Subcontractor in whole or in part to the extent necessary, in Contractor's sole discretion, to protect Contractor against Losses for which Subcontractor is responsible as a result of any Default, as that term is defined below.

If, at any time prior to final payment, Contractor determines, in its sole discretion, that it is insecure regarding Subcontractor's ability, willingness, or intent to fulfill its warranty obligations under the Subcontract Documents, Contractor may, at its option, withhold final payment during the entire Warranty Period. Subcontractor waives any right to recover interest on the amount withheld during that time. Contractor shall make final payment for Subcontractor's Work within ten (10) days of (1) expiration of the Warranty Period, or (2) Contractor's receipt of adequate assurances from Subcontractor of its ability, willingness and intent to perform the warranty work, subject to receipt of by Contractor of final payment from Owner as provided in Section 6.2.

6.6 **Backcharges.** Where feasible, Contractor shall use reasonable efforts to give Subcontractor notice before any costs are incurred which will be offset against the Subcontract Price. If Subcontractor disagrees with the nature or amount of costs to be incurred, it shall advise Contractor promptly in writing, and in no event later than three (3) days after its receipt of notice from Contractor. Such notification shall include reasons for Subcontractor's dispute and shall propose a reasonable and acceptable alternative along with an estimate of the cost of the alternative, where applicable.

If Contractor receives no protest to a proposed backcharge or Subcontractor protests and does not provide an alternative to Contractor's proposed action, Contractor may proceed to incur the costs and offset them against the Subcontract Price. Costs so offset shall be deemed to be reasonable and beyond dispute by Subcontractor. If Subcontractor timely protests and proposes a reasonable alternative that Contractor rejects, the disputed costs incurred shall be subject to the dispute resolution procedure outlined in Article XI, if Subcontractor gives Contractor written notice within ten (10) days of such rejection.

6.7 **Lien Waivers.** Subcontractor shall present to Contractor lien waivers for all labor, materials and equipment furnished by others in connection with this Subcontract prior to receiving each payment hereunder. Contractor may require such lien waivers as a condition of progress or final payment.

SAMPLE

6.8 **Liens.** Subcontractor shall timely pay all claims for labor, materials, and equipment incurred in the performance of the Work and shall (1) keep the property on which the Project is situated (the "Property") free from mechanic's liens or attachments, and (2) prevent the filing of any claim or stop notice against funds or the payment of funds owed to Contractor, by any person or entity performing a portion of the Work. If any mechanic's lien, attachment, claim against funds, or stop notice is filed against the Property or funds owed to Contractor arising out of or related to performance of the Work, Subcontractor shall, within ten (10) days after written demand by Contractor, take all reasonable steps necessary to cause the effect of such lien, attachment, claim, or stop notice to be released. Upon request by Contractor, Subcontractor shall obtain a lien release or discharge bond or other bond satisfactory to Contractor in the amount of 150% all liens, attachments, claims, or stop notices so recorded or served.

6.9 Acceptance of, or payment for, Subcontractor's defective or late work shall not constitute a waiver of any claim or offset that Contractor may have under the terms of this Subcontract.

ARTICLE VII

7.1 **Indemnification.** To the fullest extent allowed by law, Subcontractor shall indemnify and hold harmless Contractor, Owner, the project architects and engineers, and all of their respective agents and employees (the "Indemnitees") from and against all claims, damages, losses and expenses including, without limitation, attorney's fees ("Losses"), arising out of or resulting from (1) any Default, or failure by Subcontractor to comply with any express duty, warranty, representation, acknowledgment or covenant in this Subcontract, (2) any charges, claims, or liquidated damages assessed and collected by the Owner against Contractor as a result of and to the extent caused by any act or omission of Subcontractor or its sub-subcontractors, guests or invitees; (3) personal or bodily injury to or death of any person, including, without limitation, any agent, employee, guest or invitee of Subcontractor or its sub-subcontractors, other contractors, Contractor, or Owner, to the extent caused by any act or omission of Subcontractor or its sub-subcontractors, guests or invitees, (4) damage to or loss of property to the extent caused by any act or omission of Subcontractor or its sub-subcontractors, guests or invitees, (5) any use of Contractor's equipment, tools, rigging, blocking, hoists, or scaffolding, (6) liens, attachments, claims, or stop notices against funds or payments owed to Contractor, recorded or served by any of Subcontractor's sub-subcontractors, or (7) infringement of any patent or copyright by Subcontractor. Such obligation shall not be construed to negate, abridge, or otherwise reduce any other right or obligation of indemnity which would otherwise exist as to any party or person described in this paragraph.

The indemnity agreement shall be covered by Subcontractor's comprehensive general liability insurance policy. The indemnity obligations set forth in this Subcontract shall not be limited by (1) the Subcontract Price, or (2) the amount or type of proceeds, compensation, or benefits available to Subcontractor under any insurance policy including, without limitation, any self-insurance or similar program or policy maintained by Subcontractor.

At the request of an Indemnitee, Subcontractor shall defend any claim for Losses against an Indemnitee. The Indemnitee shall be entitled to approve the legal counsel to be paid for by Subcontractor for the purpose of defending such claims for Losses. No claim for Losses shall be settled or discontinued, nor shall judgment be permitted to be entered without the written consent of the Indemnitee, which consent shall not be unreasonably withheld.

ARTICLE VIII

8.1 **Insurance.** Unless otherwise specified in the Subcontract Documents indicating that insurance shall be provided pursuant to an owner-controlled or contractor-controlled insurance program, Subcontractor shall purchase and maintain the following insurance coverages for itself and the Additional Insureds during the course of the Work and during the Warranty Period, and shall maintain completed operations coverage for itself and the Additional Insureds for the length of time necessary to cover any manifestation date within the applicable statutes of limitations and/ or repose which pertain to the Work. If additional insurance coverage or greater limits of liability are required by the General Contract Documents, such provisions shall control.

8.1.1 **Commercial General Liability** coverage on an occurrence basis with a deductible not to exceed $1,000 per occurrence that includes coverage for liability assumed under any oral or written contract relating to the conduct of Subcontractors' business, including this Subcontract, and also including (1) broad form property damage liability coverage; (2) premises-operations coverage; (3) explosion and collapse hazard coverage; (4) underground hazard; (5) products and completed operations hazard coverage, and (6) independent contractor coverage. The limit of

liability shall be not less than $1,000,000 each occurrence, $2,000,000 general aggregate (subject to a per project general aggregate provision applicable to the project per ISO form CG 2503 or its equivalent), $2,000,000 products/completed operations aggregate and $1,000,000 personal and advertising injury.

Claims Made/Self-Insurance Provisions. Subcontractor shall not provide general liability insurance under any Claims-Made General Liability form without express prior written consent of Contractor. Any self-insurance program providing coverage in excess of $25,000 per occurrence requires the prior written consent of the contractor.

8.1.2 **Automobile Liability** coverage in comprehensive form affording coverage for owned, hired, and non-owned vehicles. The limit of liability shall not be less than $1,000,000 for bodily injury and property damage combined, $1,000,000 for each accident. (No aggregate on automobile insurance). The General Contractor, Owner and all other parties required of the General Contractor, shall be included as insureds on the auto policy.

8.1.3 **Workers Compensation and Employers Liability** coverage with Workers Compensation limits complying with statutory requirements, and Employers Liability Insurance limits of at least $1,000,000 each accident, $1,000,000 for bodily injury by accident, and $1,000,000 each employee for injury by disease. Workers' compensation insurance shall comply with the statutory form.

8.1.4 **Commercial Umbrella** coverage with limits of at least $2,000,000. Umbrella coverage must include as insureds all entities that are additional insureds on the CGL. Umbrella coverage for such additional insureds shall apply as primary before any other insurance or self-insurance, including any deductible, maintained by, or provided to, the additional insured other than the CGL, Auto Liability and Employers Liability coverages maintained by the Subcontractor.

8.1.5 **Hazardous Materials** If Subcontractor and/or its subcontractors or suppliers, regardless of tier, perform remediation of hazardous material, or if their operations create an exposure to hazardous materials as those terms are defined in federal, state, or local law, Subcontractor and its subcontractors and suppliers must obtain a "Contractor's Pollution Liability" policy with limits not less than $1,000,000 per occurrence and $2,000,000 aggregate for Bodily Injury, Personal Injury, and Property Damage, naming Contractor and Owner as additional insured. If Subcontractor or its subcontractors or suppliers haul hazardous material (including, without limitation, waste), they must carry Auto Liability insurance with a $1,000,000 Combined Single Limit for Bodily Injury and Property Damage applicable to all hazardous waste hauling vehicles and include MCS 90 and CA9948.

8.1.6 **Professional Liability Coverage** Any subcontractor performing work that includes design/build work or services shall obtain a Professional Liability Insurance Policy. Design/build work includes, without limitation, design/build work with respect to mechanical, structural, plumbing, and fire sprinkler systems. Coverage must allow for a minimum of two years following the completion of the project. If Owner or Contractor elects to purchase a project design policy, Subcontractor's policy shall be endorsed to provide excess coverage only.

The liability insurance policies, including commercial general liability, automobile liability and excess liability, shall be endorsed to provide: (1) that Contractor and Owner are additional insureds (the "Additional Insureds") per ISO form CG 20 10 07 04 and CG 20 37 07 04 or their equivalent, (2) that the insurance afforded by the policies shall apply to Contractor as though a separate policy had been issued to Contractor, and (3) that the coverage afforded to Contractor is primary and any other insurance in force for Contractor will be excess and will not contribute to the primary policies. All required insurance shall be provided by insurance companies with a rating of A- VII or better by A.M. Best Company.

Prior to performing any Work, Subcontractor shall provide Contractor with a certificate of insurance demonstrating that Subcontractor has obtained all of the insurance coverages required by this Section. An additional insured endorsement shall be attached to such certificate of insurance. The certificate of insurance and the insurance policies effectuating coverages required by this Section shall contain a provision that coverage afforded under the policies will not be canceled or allowed to expire until at least 30 days prior written notice has been given to Contractor.

SAMPLE

8.2 Subcontractor waives all rights against Contractor, Owner and Architect and their respective agents, officers, directors and employees for recovery of damages to the extent these damages are covered by commercial general liability, commercial umbrella liability, business auto liability or workers compensation or employers liability insurance.

8.3 Subcontractor will protect the job site, the work of Contractor and subcontractors, and its own work until completion and acceptance of the entire project. Contractor and Subcontractor waive all rights against each other and against all other subcontractors and Owner for loss or damage to the extent reimbursed by Builder's Risk or any other property or equipment insurance applicable to the work, except such rights as they may have to the proceeds of such insurance. If the Subcontractors policies of insurance referred to in this Section require an endorsement or consent of the insurance company to provide for continued coverage where there is a waiver of subrogation, the owners of such policies will cause them to be so endorsed or obtain such consent.

Upon written request of the Subcontractor, Contractor shall provide Subcontractor with a copy of the Builder's Risk policy of insurance or any other property or equipment coverage in force for the project and procured by Contractor. Subcontractor shall satisfy himself as to the existence and extent of such coverage prior to commencement of Subcontractor's work.

If Builder's Risk insurance purchased by Owner or Contractor provides coverage for Subcontractor for loss or damage to Subcontractor's work, Subcontractor shall be responsible for the insurance policy deductible amount applicable to damage to the Subcontractor's work and/or damage to other work caused by Subcontractor. If not covered under the Builder's Risk policy of insurance or any other property or equipment insurance required by the Contract Documents, Subcontractor shall procure and maintain at his own expense property and equipment insurance for portions of Subcontractor's work stored off the site or in transit.

If Owner or Contractor has not purchased Builder's Risk or equivalent insurance including the full insurable value of Subcontractor's work, then Subcontractor may procure such insurance at his own expense as will protect the interests of Subcontractor, and his subcontractors in the work. Such insurance shall also apply to any of the Owner's or Contractor's property in the care, custody, or control of Subcontractor.

8.4 **Health Insurance Certification.** Subcontractor hereby certifies that the Subcontractor and all applicable subcontractors and suppliers at any tier that is subject to UCA 63A-5-205 and Utah Administrative Code Rule R23-23, has and will maintain for the duration of this contract, an offer of qualified health insurance coverage for their employees; all in accordance with UCA 63A-5-205, and Utah Administrative Code Rule R23-23.

ARTICLE IX

9.1 **Default.** The following acts or omissions by Subcontractor shall constitute events of default ("Default") under this Subcontract and shall give rise to all rights and remedies for material breach of this Subcontract, including, without limitation, termination of this Subcontract:

(a) failure to perform the Work in strict compliance with this Subcontract and the Subcontract Documents.

(b) failure to promptly and diligently correct or replace Defective Work.

(c) failure to diligently perform the Work in compliance with the Project Schedule including, without limitation, failure to supply sufficient skilled laborers, materials, or equipment.

(d) failure to provide reasonable assurances of timely performance.

(e) failure to provide timely submittal information for review and approval as provided in the Subcontract Documents.

(f) failure or evidence of failure to timely pay workers, subcontractors, or health, welfare, pension or other benefit funds for labor, materials or equipment furnished as part of the Work.

(g) failure to keep the Property free from mechanic's liens.

SAMPLE

(h) third party claims or evidence indicating, in Contractor's sole discretion, probable filing of such claims unless Subcontractor provides security against such claims in a form acceptable to Contractor.

(i) failure to pay prevailing wages, if required.

(j) assignment or subcontracting the majority of the Work without prior written authorization from Contractor.

(k) failure to perform the Work in strict compliance with the Laws and Regulations or the Safety Rules and Regulations.

(l) evidence that the Work can not be completed for the unpaid balance of the Subcontract Price, as determined by Contractor in its sole discretion.

(m) evidence that the Work will not be completed within the Subcontract Time, and/ or that the unpaid balance will not be adequate to cover actual or liquidated damages for the anticipated delay, as determined by Contractor in its sole discretion.

(n) damage to the work of Contractor or others on the Project.

(o) insolvency, inability to pay its current obligations, filing of any action seeking the protection of a bankruptcy court where this Subcontract is rejected by the trustee or the Subcontractor is unable to satisfy the requirements for assuming this Subcontract under the applicable provisions of the bankruptcy code, seeking to effect reorganization or workout with its creditors, filing in bankruptcy court by its creditors seeking to compel Subcontractor to reorganize or liquidate assets, appointment of a receiver or trustee related to any insolvency of Subcontractor, and garnishment of any amounts owed by Contractor to Subcontractor;

(p) any other material breach of this Subcontract or the Subcontract Documents; and

(q) any act, occurrence or event that places Subcontractor in default under any agreement between Contractor and Subcontractor other than this Subcontract.

9.2 **Notice of Default.** Upon written notice of Default, Subcontractor shall, within forty-eight (48) hours of receipt of such notice, take all actions requested by Contractor and such other actions as may be necessary to cure such Default. Subcontractor shall not be entitled to any adjustment in the Subcontract Price or the Subcontract Time as a result of any efforts to cure such Default.

9.3 If Subcontractor fails to cure any Default within forty-eight (48) hours after receipt of written notice of Default, Contractor may cure or remedy any Default by Subcontractor. Subcontractor shall reimburse Contractor and/or Contractor may backcharge Subcontractor for, any and all Losses it incurs, plus a reasonable allowance for profit, to cure or remedy any Default, or as a result of any other failure of Subcontractor to comply with the terms and conditions of this Subcontract or the Subcontract Documents. Contractor may offset against the Subcontract Price any Losses incurred as a result of a Default or any amounts owed to Contractor pursuant to this Section.

ARTICLE X

10.1 **Termination for Cause.** If (1) Subcontractor fails to cure any Default within forty-eight (48) hours after receipt of written notification of such Default, or (2) a Default threatens to cause immediate personal or bodily injury or death, Contractor may terminate Subcontractor's rights under this Subcontract in its entirety and Contractor shall have all the rights and remedies available under this Subcontract and at law or in equity including, without limitation, those remedies specified below.

If Contractor terminates this Subcontract for cause as provided herein, Contractor may, without prejudice to any other of its rights or remedies, perform and complete the Work and in connection therewith, Contractor may do any or all of the following:

10.1.1 exclude Subcontractor from the Project.

SAMPLE

10.1.2 take possession of all materials, equipment, and tools intended for performance of the Work including materials and equipment at the Project site, stored materials and equipment, and materials and equipment in the course of preparation wherever located (without liability to Subcontractor for trespass or conversion),

10.1.3 accept assignment of Subcontractor's rights under all of Subcontractor's contracts with sub-subcontractors for performance of the Work, pursuant to Section 3.9 and/ or

10.1.4 otherwise obtain materials and equipment and employ persons which, in Contractor's sole discretion, are necessary to complete the Work.

Upon termination for cause as provided herein, Subcontractor shall not be entitled to receive any further payment until completion of all of the Work and acceptance of the entire Project. Subcontractor shall reimburse Contractor for all Losses it incurs to complete Subcontractor's Work, plus a reasonable allowance for overhead and profit. If the unpaid balance of the Subcontract Price exceeds the Contractor's Losses, plus allowance for overhead and profit, Contractor shall pay such excess to Subcontractor. If such Losses, overhead, and profit exceed the unpaid balance of the Subcontract Price, the Subcontractor shall pay the difference to Contractor. In addition, Contractor shall be entitled to such other and further remedies available at law or in equity.

10.2 **Suspension for Convenience.** Contractor may, without cause, suspend, delay, or interrupt the Work in whole or in part for such period of time as the Contractor may determine and/ or as provided in the Subcontract Documents. Subject to the requirements and limitations of Article V, the Subcontract Price and Subcontract Time may be adjusted for increases in the cost and time to complete the Work caused by such suspension. No adjustment shall be made, however, to the extent that (a) performance is, was or would have been so suspended, delayed or interrupted by another cause for which the Subcontractor is responsible, (b) an adjustment is made or denied under another provision of this Subcontract, or (c) Contractor is not entitled to a adjustment in the contract price and/ or the contract time under the General Contract on behalf of Subcontractor as a result of such suspension.

10.3 **Termination for Convenience.** The Contractor may, at any time, terminate this Subcontract for the convenience of Contractor and without cause. Subcontractor's sole and exclusive right to compensation for Losses resulting from such termination shall be the compensation actually received by Contractor from Owner on behalf of Subcontractor as a result of any such termination. Subcontractor shall not be entitled to any compensation for Losses or any other remedy under this Subcontract or for breach thereof as a result of such termination beyond such adjustment in the contract price and/ or the contract price to the Prime Contract received by Contractor from Owner on behalf of Subcontractor. Receipt by Contractor of such compensation is a condition precedent to Subcontractor's right, if any, to compensation for Losses resulting from such termination. Subcontractor's right to recover for such termination shall be limited to the compensation received by Contractor from Owner for such termination on behalf of Subcontractor.

ARTICLE XI

11.1 **Dispute Resolution.** Disputes, if any, between Subcontractor and Contractor arising out of or relating to this Subcontract or the Work shall be resolved as provided in this Article.

11.2 **Disputes Involving the Owner or the Architect.** Any disputes in which the Owner or the Architect is a party shall be governed by the dispute resolution procedures in the Subcontract Documents other than this Subcontract. If those Subcontract Documents contain no dispute resolution procedures, such disputes shall be resolved as provided in Section 11.3 below.

11.3 **Disputes Not Involving the Owner or the Architect.** At the sole and exclusive discretion of Contractor, all disputes in which neither the Owner nor the Architect is a party shall be resolved in (1) binding arbitration, or (2) litigation in a state or federal court of competent jurisdiction situated in the state of the location of the Project. If Contractor determines to resolve disputes under this Subcontract by binding arbitration, the following rules shall apply.

11.3.1 Binding Arbitration shall be pursuant to the current Construction Industry Arbitration Rules of the American Arbitration Association unless the parties mutually agree otherwise. A written demand for arbitration shall be filed with the American Arbitration Association and the other party within

a reasonable time after the dispute or claim has arisen, but in no event after the applicable statute of limitations for a legal or equitable proceeding would have run.

11.3.2 Any Arbitration pursuant to this Subcontract may be joined or consolidated with any arbitration involving (1) any other person or entity necessary to resolve the claim, dispute or controversy, (2) the same transaction or series of related transactions as those in the Arbitration, or (3) a common issue of law or fact with those in the Arbitration creating the possibility of conflicting rulings by more than one arbitrator or panel of arbitrators. The location of the arbitration proceedings shall be in the state of the location of the Project. The arbitration award shall be final.

11.3.3 Arbitration pursuant to this Section shall be governed by the applicable version of the Uniform Arbitration Act in enacted by the state of the location of the Project. The arbitrator, in determining an award, shall be without jurisdiction to enter any award not in conformity with the laws determined by the parties to be controlling pursuant to Section 12.4. The arbitrator shall have all authority necessary to enforce all the terms and conditions of this Subcontract and provide for all remedies available hereunder including, without limitation, interim relief, if appropriate. The arbitrator shall prepare a (1) reasoned award, or (2) findings of fact and conclusions of law, applying the governing laws to the facts of the case.

11.3.4 Notwithstanding the foregoing, the arbitrator shall be deemed to have exceeded the authority granted under this Subcontract if, and to the extent, an award does not comply with the requirements of this Subcontract. The Parties consent to the jurisdiction of the state and federal courts of the state in which the Project is located for the purposes of (1) enforcing the parties' obligation to arbitrate disputes, claims and controversies under this Subcontract, (2) determining the scope of the matters that are subject to arbitration, (3) requiring the joinder and/ or consolidation of matters subject to arbitration, and (4) enforcing and entering judgment upon the arbitration award entered by the arbitrator. Each Party waives any objection that it may now have or hereafter have to venue in such courts.

11.3.5 If any action or proceeding is brought in connection with this Subcontract, the prevailing party shall be entitled to recover its costs and reasonable expert and attorneys' fees.

ARTICLE XII

12.1 This Subcontract and the Subcontract Documents constitute the final, complete, and exclusive statement of the agreement between the parties, and supersedes and replaces in their entirety all prior oral or written agreements, including but not limited to, bids and bid acceptances. This Subcontract may not be altered, amended or extended, except by written agreement of the parties hereto executed by James Gramoll on behalf of Contractor.

12.2 This Subcontract shall inure to the benefit of and be binding upon the parties hereto, their successors and permitted assigns.

12.3 Delay by Contractor in enforcing any rights or remedies in the event of Default or a breach of any term or condition of this Subcontract or any other contract between Contractor or Subcontractor, shall not be construed as a waiver of such Default or breach. Payment by Contractor of progress payments or final payment shall not be construed as acceptance of any work for which payment is made or waiver of any Claims, rights, or remedies under this Subcontract.

12.4 This Subcontract shall be construed and interpreted as a whole in accordance with its fair meaning and in accordance with the laws of the state of the location of the Project. Under no circumstances, however, shall such laws be interpreted to apply conflict of laws principles to require the laws of another state to determine the interpretation or construction of this Subcontract.

12.5 **Performance Guaranty.** If Subcontractor operates as a corporation, limited liability company, partnership or a business entity other than as an individual or sole proprietor, this Subcontract will be signed by the President and Secretary of the corporation, the managing member(s), partners, or other authorized principals of Subcontractor's company, and the officers, managing member(s), partners, and/ or other principals signing this Subcontract on behalf of the corporation, limited liability company, partnership or other

SAMPLE

business entity do jointly and severally, guarantee to the Contractor the full and faithful performance of this Subcontract by Subcontractor, and do further agree, jointly and severally, that they shall be personally liable to Contractor for the full and faithful performance of Subcontractor's obligations under this Subcontract. Failure of Contractor to request a performance bond from Subcontractor shall not affect the obligation assumed by the officers, managing members, partners or other principals signing this Subcontract on behalf of Subcontractor.

SAMPLE

IN WITNESS WHEREOF, this Subcontract has been executed by the Contractor and Subcontractor as of the day and the year below.

SUBCONTRACTOR: **(SUBCONTRACTOR NAME)**

By _____

Print _____

Its _____

Date: _____

CONTRACTOR: **GRAMOLL CONSTRUCTION COMPANY**

Auth _____

Print _____Dustin Gramoll, President_____

Date: _____

SAMPLE

Designer assigned	Item	Location	Product Description / notes/ need	Product #	Product Color/ Color code	Questions
Mer	LVT flooring	All hallways, common gathering areas, offices, storage rooms, electrical room	Can be 1/2" thicker than the Tile. Donnington	450 503	Vanilla Hickory	
Mer	Tile	All apartment bathrooms, main bathrooms, entry, laundry area	Tile in bathrooms will also go up 4ft on wall Tile floor design to be drawn. Arizona Tile		Pave Ivory-Shower Floor Mosaics-2x2. Pave Moka-floors/walls 12x24 ???	
Mer	Stairwell flooring		Black rubber stair tread		Black	
Mer	Cabinets	Cabinets for all apartment kitchens and common area kitchenette, laundry	Mark. Oak. Need all one color		Flat Smoke Shaker Plain style Recessed clear Veneer	
Mer	Cabinet pulls	all kitchen cabinets	D-pulls. Bronzed gold/ champagne bronze		Bronzed gold (aka champagne bronze)	
Mer	Vanity	All apartment bathrooms and main bathroom	Floating vanity for apartments and full vanity for main building bathroom. Arizona Tile: Della Terra Quartz. 3 cm+oval basin			
Mer	Countertop	All apartment Kitchens and bathrooms	Arizona Tile: Della Terra Quartz. 3 cm+ Rectangular sink basin, single		Frost	$54/sq ft from Bedrock Quartz
Mer	Toilets	toilets for all bathrooms	full flat sides- no swirl design- Mark can help us select toilets- go to the plumbing stores I gave you info			
Mer	Faucet	all bathrooms and kitchen areas	Moen. Flat top handle. one hole design for bathrooms and kitchen.		Black matte-bathrooms; bronzed gold-kitchen	
Mer	Doors	All Interior doors for apartments and offices. Doors for apartment entrance	Interior door- Flat panel- masonite ("hardboard", HDF-high density fiberbord, pressboard) 1 3/8" pre hung finger joint pine jam Exterior apartment doors- Solid core		Flat smoke	

Designer assigned	Item	Location	Product Description / notes/ need	Product #	Product Color/ Color code	Questions
Mer	Kickplates	For all apartment entrances, bedroom and bathroom doors	24" high		Color pending	
Mer	Closet doors	All apartment closets	Accordian bi-fold style doors		Flat Smoke	
Client	Appliances	Apartments and kitchenette	All black appliances- supplied and selected by client		Black	
Mer	Paint	Consistent color for all walls	Sherwinn Williams	SW6164	Interior Semi-gloss Svelte Sage	
Mer	Wallguards/ baseboards	Wallguards for half of wall in all hallway and common areas Rubber base for all walls	Product from Wallguards.com		Portobello	
Client	Lighting	Can lighting/ warm color for all areas	will notify electrician		warm light	
Client	Mailboxes	Main entrance	Silver/ aluminum color basic 12 unit box			
Client	Cameras	Interior and exterior	6 outdoor cameras/ 6 indoor cameras			
Client	Alarm		maybe panic alarm but not full alarm			
Client	Key card system		key card all entry doors			