DAVIS TECHNICAL COLLEGE
WELDING TECHNOLOGY BUILDING

355 SOUTH 650 EAST, KAYSVILLE, UT 84037

BID PACKAGE #1 Stamped set
Including Addendum #4 & #5

DEFERRED SUBMITTALS

- FIRE ALARM
- FIRE SPRINKLERS
- SEISMIC RESTRAINTS (MECHANICAL & ELECTRICAL)
- OPEN WEB STEEL JOITS

REQUIRED FOR OCCUPANCY

THE FOLLOWING DOCUMENTS ARE REQUIRED BEFORE A CERTIFICATE OF OCCUPANCY IS ISSUED:

- A CODE INSPECTION REPORT RECOMMENDING THAT A CERTIFICATE OF OCCUPANCY BE ISSUED.
- FINAL REPORT FROM THE SPECIAL INSPECTION AGENCY.
- CERTIFICATE OF FIRE CLEARANCE FROM THE STATE FIRE MARSHALL.
- FINAL APPROVAL FROM THE STATE ELEVATOR INSPECTOR, IF APPLICABLE.
- FINAL APPROVAL FROM THE STATE BOILER INSPECTOR, IF APPLICABLE.
- REPORT OF THE DISINFECTION OF THE POTABLE WATER SYSTEM. IPC 610
- A CERTIFICATE OF COMPLIANCE FROM THE APPROVED FABRICATOR, IF APPLICABLE. IBC 1704.2.2.
- A STAMPED AND SIGNED FINAL REPORT FROM THE STRUCTURAL ENGINEER WHEN STRUCTURAL OBSERVATION IS REQUIRED BY IBC 1710.
- AN NFRC CERTIFICATE FOR FENESTRATION WITHOUT THE NFRC LABEL.
- FINAL REPORT FROM THE SPECIAL INSPECTOR AND THE MECHANICAL ENGINEER WHEN SMOKE CONTROL IS REQUIRED. THE REPORTS MUST COMPLY WITH IBC 909.18.8.3.

CRSA

PROJECT **24-038**

BID PACKAGE #1 2024-08-26

REVISIONS

NO.	DATE	DESCRIPTION
2	2024-09-25	ADDENDUM #02
3	2024-10-10	ADDENDUM #03



CONTRACTOR	ARCHITECT	CIVIL ENGINEER	STRUCTURAL ENGINEER	PLUMBING ENGINEER	ELECTRICAL ENGINEER
GRAMOLL CONSTRUCTION KEN ROMNEY 801-295-2341 KEN.ROMNEY@GRAMOLL.COM	CRSA JEFF BAIRD 801-746-6842 JBAIRD@CRSA.COM	MERIDIAN ENGINEERING JAYMIN VICKERS 801-569-1315 JVICKERS@MEIAMERICA.COM	DUNN ASSOCIATES GREG DUNN 801-575-8877 GDUNN@DUNN-SE.COM	HEATH ENGINEERING ROB KESLER 801-322-0487 RKESLER@HEATHENG.COM	SPECTRUM ENGINEERS MARIO MARTINEZ 814-401-9415 MARIO.MARTINEZ@SPECENG.COM

STATE OF UTAH JEFFREY D. BAIRD 9142226-0301 LICENSED ARCHITECT

STATE OF UTAH 8/26/24 JAYMIN R. VICKERS No. 13775865-2202 LICENSED PROFESSIONAL ENGINEER

PROFESSIONAL STRUCTURAL ENGINEER 9027257 GREGORY S. DUNN STATE OF UTAH 8-26-24

LICENSED PROFESSIONAL ENGINEER No. 270836 ROBERT JACK KESLER STATE OF UTAH 8/26/2024

PROFESSIONAL ENGINEER No. 12735766 MARIO SEBASTIAN MARTINEZ STATE OF UTAH 9/24/2024

REVIEWED FOR CODE COMPLIANCE

DAVIS TECHNICAL COLLEGE
WELDING TECHNOLOGY BUILDING
355 SOUTH 650 EAST
KAYSVILLE, UT 84037

DAVISTECH
DAVIS TECHNICAL COLLEGE

STATE OF UTAH JEFFREY D. BAIRD 9142226-0301 LICENSED ARCHITECT

COVER SHEET
GI000.1

GENERAL

GI000.1 COVER SHEET
GI001.1 SHEET INDEX
GI002.1 CODE SUMMARY DFCM
GI003.1 SPECIAL INSPECTIONS
GI101.1 LEVEL 1 CODE PLAN

CIVIL

C100.1 GENERAL NOTES AND DETAILS
C101.1 UTILITY DETAILS
C102.1 APWA DETAILS
C200.1 BOUNDARY & TOPOGRAPHIC SURVEY
C201.1 BOUNDARY & TOPO SURVEY
CS210.1 DEMOLITION PLAN
CS230.1 SITE PLAN
CU300.1 UTILITY PLAN
CG400.1 GRADING PLAN
C500.1 EROSION CONTROL PLAN
C510.1 EROSION CONTROL DETAILS

ARCHITECTURAL SITE

AS101.1 ARCHITECTURAL SITE PLAN

ARCHITECTURAL

AE100.1 DIMENSION CONTROL PLAN
AE101.1 LEVEL 1 FLOOR PLAN
AE171.1 LEVEL 1 REFLECTED CEILING PLAN
AE191.1 ROOF PLAN
AE201.1 BUILDING ELEVATIONS

STRUCTURAL

SE001.1 GENERAL STRUCTURAL NOTES
SE002.1 GENERAL STRUCTURAL NOTES
SE003.1 GENERAL STRUCTURAL NOTES
SE101.1 FOOTING AND FOUNDATION PLAN
SE102.1 LOW ROOF FRAMING PLAN
SE103.1 HIGH ROOF FRAMING PLAN
SE201.1 ELEVATIONS
SE211.1 BUILDING ELEVATIONS
SE301.1 BUILDING SECTIONS
SE501.1 FOOTING AND FOUNDATION DETAILS
SE502.1 FOOTING AND FOUNDATION DETAILS
SE701.1 ROOF FRAMING DETAILS
SE702.1 ROOF FRAMING DETAILS
SE703.1 ROOF FRAMING DETAILS
SE704.1 STEEL STUD FRAMING DETAILS
SE801.1 CONCRETE SCHEDULES
SE802.1 STEEL SCHEDULES
SE803.1 MASONRY SCHEDULES
SE804.1 STEEL STUD SCHEDULES
SE805.1 DIAPHRAGM SCHEDULE

PLUMBING

P-001.1 PLUMBING SCHEDULES AND SYMBOL LEGEND
PL111.1 PLUMBING PLAN -DRAIN/WASTE/VENT
PL112.1 PLUMBING PLAN -WATER, GAS & COMPRESSED AIR
PL401.1 ENLARGED PLUMBING PLANS
PL501.1 PLUMBING DETAILS
PL502.1 PLUMBING DETAILS
PL901.1 WASTE & VENT ISOMETRIC

ELECTRICAL

EE001.1 SHEET INDEX, AND ABBREVIATIONS
ES101.1 ELECTRICAL SITE PLAN
ES501.1 ELECTRICAL DETAILS
EP601.1 ONE-LINE DIAGRAM

CRSA

PROJECT **24-038**

BID PACKAGE #1 2024-08-26

REVISIONS

NO.	DATE	DESCRIPTION
1	2024-09-06	ADDENDUM #01
3	2024-10-10	ADDENDUM #03

REVIEWED FOR CODE COMPLIANCE
Matthew W Peterson
2024
DEPARTMENT OF FACILITIES CONSTRUCTION AND MANAGEMENT

DAVIS TECHNICAL COLLEGE WELDING TECHNOLOGY BUILLDING

355 SOUTH 650 EAST
KAYSVILLE, UT 84037

DAVISTECH
DAVIS TECHNICAL COLLEGE

STATE OF UTAH
JEFFREY D. BARD
9142226-0301
LICENSED ARCHITECT

NARRATIVE

BID PACKAGE #1

SITE & STRUCTURE - Major structural and site elements.

BID PACKAGE #2

CORE, SHELL, & INTERIOR FINISHES - Exterior envelope and major MEP systems. Interior elements, including finishes and millwork.

LOCATION MAP

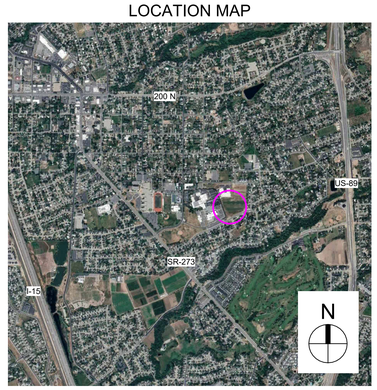

VICINITY MAP

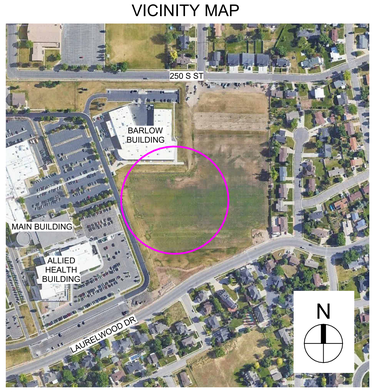

SHEET INDEX
GI001.1

10/10/2024 2:24:42 PM

DFCM GUIDELINES FOR SEISMIC RESTRAINT OF NONSTRUCTURAL COMPONENTS

1. General Comments:

a) These guidelines shall apply to all nonstructural components installed in newly constructed buildings, building additions, and all new or replaced components in existing buildings. Nonstructural components consist of architectural, mechanical and electrical components that are permanently attached to the primary structure.

b) When a change in occupancy occurs that causes an existing building to be re-classified to a higher Occupancy Category per IBC Table 1604.5, all existing nonstructural components shall be confirmed to meet the seismic restraint requirements of Chapter 13 in ASCE 7.

c) These guidelines define the minimum submittal requirements to obtain DFCM approval for seismic restraint of nonstructural components. The guidelines noted herein shall not cancel or set aside more conservative requirements specified by the design professional in responsible charge.

d) All references made to the IBC or ASCE 7 reference the 2006 and 2005 editions, respectively.

2. Checklist Requirements:

a) All DFCM projects shall have the "**Nonstructural Component Checklist**' clearly shown on the front of the construction plans. Click here to download a PDF of this checklist.

b) Each item within the checklists shall have the appropriate box checked and comments shall be provided noting the particular component(s) that require seismic restraint. See the example checklists provided at the end of this handout.

c) The "Not Required" box should only be checked if the component is exempt from requiring seismic restraint by Section 13.1.4 of ASCE 7, or if the component in question will not be provided as part of the project.

d) If the "Deferred Submittal" box is checked the additional requirements of Section 6 included in this handout must be met.

3. Submittal Requirements:

a) The seismic restraint requirements for nonstructural components may be provided with the original construction documents submitted to DFCM or may be submitted later as a deferred submittal. Whether provided with the original plans or later, the requirements of this section must be met.

b) Seismic restraint submittals shall include construction documents meeting the requirements of Section 4 of this handout as well as supporting design information discussed in Section 5 of this handout.

4. Construction Documents:

a) The construction documents must include seismic restraint details providing specific information relating to the materials, type, size, and locations of anchorages; materials used for bracing; attachment requirements of bracing to structure and component; and locations of transverse and longitudinal sway bracing and rod stiffeners.

b) The construction documents must note the special inspection and testing requirements for the seismic restraint of nonstructural components per Section 13.2.7 of ASCE 7.

c) DFCM will accept products that have been tested and listed under the ICC Evaluation Service Program, as long as they are installed in accordance with the provisions and limitations of the ICC Listing Report.

d) The requirements for anchorage/bracing of nonstructural components cannot be satisfied by a general reference to Design Manuals. Design professional may utilize these manuals as a basis of their design, but must provide all supporting documentation to ensure that the design conforms to the requirements of the 2006 IBC.

e) Rod hangers shall not be used as seismic supports unless the length of the hanger from the supporting structure is 12 in. or less. Rod hangers shall not be constructed in a manner that subjects the rod to bending moments.

5. Seismic Restraint Design Requirements:

a) Per IBC 1613.1, the seismic restraint of nonstructural components shall meet the requirements of ASCE 7. If the component in question is exempted by Section 13.1.4 of ASCE 7, a submittal noting the seismic restraint of that particular component is not required.

b) The seismic restraint design must meet the requirements listed in Table 13.2-1 of ASCE 7. These requirements may be met by providing either a project-specific design prepared by a registered design professional, or a manufacturer's certification that the component is seismically qualified.

c) A certificate of seismic qualification by the manufacturer must be accompanied by one of the following items:

- An engineered analysis conforming to the requirements of Chapter 13 of ASCE 7.

- Testing by a nationally recognized testing standard procedure such as ICC-ES AC 156. The substantiated seismic design capacities shall exceed the seismic demands determined by Section 13.3 of ASCE 7.

- Experience data conforming to a nationally recognized procedure. The substantiated seismic design capacities shall exceed the seismic demands determined by Section 13.3 of ASCE 7.

d) The following seismic restraint publications shall be considered "Accepted Engineering Practice":

- Seismic Restraint Manual, Guidelines for Mechanical Systems (3rd Edition, published by SMACNA)

- Guidelines and details that have been evaluated and reported under the International Code Council Evaluation Service Program (ICC-ES).

- Seismic restraint manuals, guidelines and details that have been approved by the California Office of Statewide Health Planning and Development (OSHPD) under their pre-approval program for seismic restraint systems.

6. Deferred Submittals:

a) Deferred submittals of seismic restraint of nonstructural components must be submitted to the DFCM Building Official a minimum of two weeks prior to the planned installation in order to allow for plan review and forwarding to inspectors. In the event that the submittal is deficient additional time may become necessary.

b) Deferred submittals shall be clearly noted on the construction plans as required by IBC 106.3.4.2. Prior to submitting to the DFCM Building Official, the submittal must be reviewed by the design professional in responsible charge and approved for general conformance with the design of the building. Please note on the plans that no deferred submittal element shall be installed until DFCM approval has been received.

c) If seismic restraints of nonstructural components are installed prior to receiving DFCM approval they shall not be covered or concealed until plan review and inspection approval. Further, installers are proceeding at their own risk until plan review and inspection approval occurs.

DFCM SUBMITTAL NOTES

1. DEFERRED SUBMITTALS FOR SEISMIC RESTRAINT OF NONSTRUCTURAL COMPONENTS MUST BE SUBMITTED TO THE DFCM BUILDING OFFICIAL A MINIMUM OF TWO WEEKS PRIOR TO THE PLANNED INSTALLATION IN ORDER TO ALLOW FOR PLAN REVIEW AND FORWARDING TO INSPECTORS. IN THE EVENT THAT THE SUBMITTAL IS DEFICIENT ADDITIONAL TIME MAY BECOME NECESSARY.
2. IF SEISMIC RESTRAINTS OF NON-STRUCTURAL COMPONENTS ARE INSTALLED PRIOR TO RECEIVING DFCM APPROVAL THEY SHALL NOT BE COVERED OR CONCEALED UNTIL RECEIVING BOTH PLAN REVIEW AND INSPECTION APPROVAL. FURTHER, INSTALLERS ARE PROCEEDING AT THEIR OWN RISK UNTIL PLAN REVIEW AND INSPECTION APPROVAL OCCURS.
3. THE REQUIREMENTS FOR SEISMIC RESTRAINT OF NONSTRUCTURAL COMPONENTS CANNOT BE SATISFIED BY A GENERAL REFERENCE TO DESIGN MANUALS. THE DESIGN PROFESSIONAL MAY UTILIZE THESE MANUALS AS A BASIS OF THEIR DESIGN, BUT MUST PROVIDE ALL SUPPORTING DOCUMENTATION TO ENSURE THAT THE DESIGN CONFORMS TO THE REQUIREMENTS OF ASCE 7- 05, CHAPTER 13.
4. SUBMITTALS MUST INCLUDE DETAILS OF THE PROPOSED SEISMIC RESTRAINT OF NONSTRUCTURAL COMPONENTS. THESE DETAILS MUST SHOW SPECIFIC INFORMATION RELATING TO THE MATERIALS, TYPE, SIZE, AND LOCATIONS OF ANCHORAGES; MATERIALS USED FOR BRACING; ATTACHMENT REQUIREMENTS OF BRACING TO STRUCTURE AND COMPONENT; AND LOCATIONS OF TRANSVERSE AND LONGITUDINAL SWAY BRACING AND ROD STIFFENERS. SUBMITTALS MAY ALSO REQUIRE STRUCTURAL CALCULATIONS, ENGINEERING REPORTS, TEST DATA, AND/OR SPECIFICATIONS TO ENSURE CODE COMPLIANCE.

REQUIREMENTS FOR OCCUPANCY

1. A CODE INSPECTION REPORT RECOMMENDING THAT A CERTIFICATE OF OCCUPANCY BE ISSUED.
2. FINAL REPORT FROM THE SPECIAL INSPECTION AGENCY.
3. CERTIFICATE OF FIRE CLEARANCE FROM THE STATE FIRE MARSHALL.
4. FINAL APPROVAL FROM THE STATE ELEVATOR INSPECTOR, IF APPLICABLE.
5. FINAL APPROVAL FROM THE STATE BOILER INSPECTOR, IF APPLICABLE.
6. REPORT OF THE DISINFECTION OF THE POTABLE WATER SYSTEM. IPC 610.
7. A CERTIFICATE OF COMPLIANCE FROM THE APPROVED FABRICATOR, IF A APPLICABLE. IBC 1704.2.2
8. A STAMPED AND SIGNED FINAL REPORT FORM THE STRUCTURAL ENGINEER WHEN STRUCTURAL OBSERVATION IS REQUIRED BY IBC 1710.
9. FINAL REPORT FROM THE SPECIAL INSPECTOR AND THE MECHANICAL ENGINEER WHEN SMOKE CONTROL IS REQUIRED. THE REPORTS MUST COMPLY WITH IBC 909.18.8.3.
10. THE NFRC CERTIFICATE TO SHOW COMPLIANCE WITH THE FENESTRATION REQUIREMENTS OF THE INTERNATIONAL ENERGY CODE.

NONSTRUCTURAL COMPONENT CHECKLIST

ITEM DESCRIPTION	NOT REQUIRED	ON CONST. DOCUMENTS	DEFERRED SUBMITTAL	COMMENTS
ARCHITECTURAL COMPONENTS:				
Interior Nonstructural Walls & Partitions		X		
Cantilever Elements (i.e. parapets, etc.)		X		
Exterior Nonstructural Wall Elements		X		
Veneer		X		
Penthouse		X		
Ceilings (i.e. suspended grid or hard-lid)		X		
Cabinets (i.e. storage cabinets, equip, etc.)		X		
Access Floors	X			
Storage Racks	X			
Appendages & Ornamentations	X			
Signs & Billboards	X			
MEP COMPONENTS:				
Fire Sprinklers			X	Fire Sprinkler Submittal
Mechanical Equipments (i.e. HVAC, fans, air handlers, boilers, furnaces, tanks, chillers, water heaters, heat exchangers, evaporates, engines, turbines, pumps, compressors, MFR equipments, etc.)			X	MEP Seismic Restraints Submittals
Electrical Equipments (i.e. generators, batteries inverters, transformers, MCC, panel boards, switch gear, cabinets, etc.)			X	MEP Seismic Restraints Submittals
Elevator & Escalator Components	X			
Communication Equipments, Computers, Instrumentation, and Controls	X			
Roof - mounted Chimneys, Stacks, Cooling & Electrical Towers	X			
Lighting Fixtures		X		
Vibration Isolated Components	X			
Piping & Conduit System			X	MEP Seismic Restraints Submittals
Ductwork (including in-line components)			X	MEP Seismic Restraints Submittals
Conveyors	X			
Cable Trays			X	MEP Seismic Restraints Submittals

CODE ANALYSIS

APPLICABLE CODES

	Year		Year
International Building Code	2021	National Electrical Code	2020
International Mechanical Code	2021	Uniform Code for	
International Plumbing Code	2021	Building Conservation	
International Fire Code	2021	ADA Accessibility	
International Energy		Guildelines	2010
Conservation Code	2021	Accessibility Standard	
International Fuel		ICC-A117.1	2009
Gas Code	2021		

A. Occupancy and Group: B
Change in Use: Yes _____ No X Mixed Occupancy: Yes _____ No X
Special Use and Occupancy (e.g. High Rise, Covered Mall): N/A

B. Seismic Design Category: D Design Wind Speed: 105 mph

C. Type of Construction (circle one):

I		II		III		IV	V	
A	B	A	B	A	B	HT	A	(B)

D. Fire Resistance Rating Requirements for the Exterior Walls based on the fire separation distance (in hours):
North: 0 South: 0 East: 0 West: 0

E. Mixed Occupancies: _____ Nonseparated Uses: √

F: Sprinklers:
Required: _____ Provided: √ Type of Sprinkler System:FULL NFPA-13

G: Number of Stories: 1 Building Height: 20'-0"

H: Actual Area per Floor (square feet): 17,052

I: Tabular Area: 36,000

J: Area Modifications: N/A

a) N/A

b) Sum of the Ratio Calculations for Mixed Occupancies:
$\frac{\text{Actual Area}}{\text{Allowable Area}} \leq 1$

c) Total Allowable Area for:
1) One Story: N/A
2) Two Story: A_s (2) N/A
3) Three Story: A_s (3) N/A

d) Unlimited Area Building: Yes _____ No X Code Section:TABLE 507.4

K. Fire Resistance Rating Requirements for Building Elements (hours).

Element	Hours	Assembly Listing	Element	Hours	Assembly Listing
Exterior Bearing Walls	0		Floors - Ceiling Floors	0	
Interior Bearing Walls	0		Roofs - Ceiling Roofs	0	
Exterior Non-Bearing Walls	0		Exterior Doors and Windows	0	
Structural Frame	0		Shaft Enclosures	N/A	
Partitions - Permanent	0		Fire Walls	N/A	
Fire Barriers	0		Fire Partitions	N/A	
			Smoke Partitions	N/A	

L. Design Occupant Load: 147 Stair Occupant Load: N/A
Exit Width Required: 30" Stair Width Required: N/A
Exit Width Provided: 144" Stair Width Provided: N/A

M. Minimum Number of Required Plumbing Facilities:
a) Water Closets - Required 4
Total Provided: 5
b) Lavatories - Required 3
Total Provided: 4
c) Bath Tubs or Showers: Required: 0
Provided: 0
d) Drinking Fountains: 2 Service Sinks: 1
Provided Level 1: (DF) 2, Level 1: (SS) 1

FOOTNOTES:

1) In case of conflict with the U.S. Department of Justice Federal Registers Parts I through V - ADA Guidelines and specific reference to the International Building Code Accessibility Chapters, the more restrictive requirement shall govern.

2) Additional Code Information shall be provided at the discretion of the Building Official for Complex Buildings. Including, but not limited to:
a) High Rise Requirements.
b) Atriums.
c) Performance Based Criteria.
d) Means or Egress Analysis.
e) Fire Assembly Locator Sheet.
f) Exterior and Interior Accessibility Route.
g) Fire Stopping, Including Tested Design Number.

CRSA

PROJECT **24-038**

BID PACKAGE #1 2024-08-26

REVISIONS

NO.	DATE	DESCRIPTION

REVIEWED FOR CODE COMPLIANCE
Reviewer: Jeffrey W Peterson
Date: 8/29/2024
UTAH DIVISION OF FACILITIES CONSTRUCTION AND MANAGEMENT

DAVIS TECHNICAL COLLEGE WELDING TECHNOLOGY BUILDING
355 SOUTH 650 EAST
KAYSVILLE, UT 84037

DAVISTECH
DAVIS TECHNICAL COLLEGE

STATE OF UTAH
JEFFREY D. SAND
9142226-0301
LICENSED ARCHITECT

CODE SUMMARY DFCM

GI002.1

8/29/2024 1:09:37 PM

DIVISION OF FACILITIES CONSTRUCTION & MANAGEMENT
Office of the State Building Official
4315 S 2700 W Taylorsville, UT 84129
Phone: (801) 538-3018
Website: http://dfcm.utah.gov/

Special Inspection, Material Testing & Structural Observation Items Required by Chapter 17 of the 2021 IBC

Indicate items requiring special inspection, structural testing, or structural observations by checking the appropriate box. All items not requiring inspection/testing should be removed from the form. For items requiring continuous inspection, a special inspector must be present onsite during the performance of that task. In most cases "periodic" inspections/tests shall be performed prior to commencing the task, intermittently during the task, and at the completion of the task. The "Detailed Instructions & Frequency" provides a description of the presumed requirements for tasks requiring "periodic" inspections. The design professional in responsible charge should revise the requirements as needed on a project-specific basis.

FABRICATORS (IBC 1704.2.5.1 & 1705.10)

☐ Approved Fabricator	Yes	No

Fabricators Name:	
Fabricators plant location	

Required In-plant Inspections: ☐ Steel Construction ☐ Cold-formed Construction ☐ Concrete Construction ☐ Other: ☐ Wood Construction ☐ Other:

STRUCTURAL STEEL (IBC 1705.2.1, 1705.12.1 & 1705.13.1)

Please refer to drawing SE003.1 for further information re: Structural Steel.

Item			*Detailed Instructions and Frequencies*
PRIOR TO WELDING (TABLE N5.4-1, AISC 360-16):			
Welder qualification records	☐ Observe	☐ Perform	Verify welder qualification records and continuity records.
Welding procedures (WPS) and consumable certificates	☐ Observe	☐ Perform	
Material identification	☐ Observe	☐ Perform	Verify type and grade of material.
Welder identification	☐ Observe	☐ Perform	Confirm a system is in place by which a welder who has welded a joint or member can be identified.
Fit-up groove welds	☐ Observe	☐ Perform	Verify joint preparation, dimensions, cleanliness, tacking, and backing.
Fit-up of CJP welds to HSS T-, Y- and K- joints without backing	☐ Observe	☐ Perform	Verify joint preparation, dimensions, cleanliness and tacking.
Access holes	☐ Observe	☐ Perform	Verify configuration and finish.
Fit-up of fillet welds	☐ Observe	☐ Perform	Verify dimensions, cleanliness and tacking.
DURING WELDING (TABLE N5.4-2, AISC 360-16):			
Control and handling of welding consumables	☐ Observe	☐ Perform	Verify packaging and exposure control.
Cracked tack welds	☐ Observe	☐ Perform	Verify that welding does not occur over cracked tack welds.
Environmental conditions	☐ Observe	☐ Perform	Verify wind speed is within limits as well as precipitation and temperature.
WPS followed	☐ Observe	☐ Perform	Verify items such as settings on welding equipment, travel speed, welding materials, shielding gas type/flow

DIVISION OF FACILITIES CONSTRUCTION & MANAGEMENT
Office of the State Building Official
4315 S 2700 W Taylorsville, UT 84129
Phone: (801) 538-3018
Website: http://dfcm.utah.gov/

			rate, preheat applied, interpass temperature maintained, and proper position.
Welding techniques	☐ Observe	☐ Perform	Verify interpass and final cleaning, each pass is within profile limitations, and quality of each pass.
Headed stud anchors	☐ Observe	☐ Perform	Verify placement and installation of head stud anchors.
AFTER WELDING (TABLE N5.4-3, AISC 360-16):			
Welds cleaned	☐ Observe	☐ Perform	Verify that welds have been properly cleaned.
Size, length, and location of welds	☐ Observe	☐ Perform	Verify the size, length and location of welds.
Welds meet visual acceptance criteria	☐ Observe	☐ Perform	Verify that welds meet crack prohibition, base metal fusion, profile, size, undercut, and porosity provisions.
Arc strikes	☐ Observe	☐ Perform	Verify that arc strikes do not exist outside the permanent weld areas.
k-area	☐ Observe	☐ Perform	When welding of doubler plates; continuity plates or stiffeners has been performed in the k-area, visually inspect the web k-area for cracks.
Backing & weld tabs removed	☐ Observe	☐ Perform	If required on the approved construction documents, verify that back and weld tabs are removed.
Repair activities	☐ Observe	☐ Perform	Verify that repair activities are performed in accordance with AISC 360 and AWS D1.1.
Documentation	☐ Observe	☐ Perform	Document the acceptance or rejection of the welded joint or member.
Prohibited welds	☐ Observe	☐ Perform	Verify that no prohibited welds have been added with the approval of the engineer of record.
NONDESTRUCTIVE TESTING (SECTION N5, AISC 360-16):			
CJP welds (Risk Cat. II)	☐ Observe	☐ Perform	
CJP welds (Risk Cat. III or IV)	☐ Observe	☐ Perform	
Welded joints subject to fatigue	☐ Observe	☐ Perform	
PRIOR TO BOLTING (TABLE N5.6-1, AISC 360-16):			
➢ *Not required if only snug-tight joints are specified [per Section N5.6(1) of AISC 360-16].*			
Certifications of fasteners	☐ Observe	☐ Perform	Verify that manufacturer's certificates are available for fastener materials.
Fasteners marked	☐ Observe	☐ Perform	Verify that fasteners have been marked in accordance with ASTM requirements.
Proper fasteners for joint	☐ Observe	☐ Perform	Verify grade, type, and bolt length if threads are excluded from the shear plane.
Proper bolting procedure	☐ Observe	☐ Perform	Verify proper procedure is used for the joint detail.
Connecting elements	☐ Observe	☐ Perform	Verify appropriate faying surface condition and hole preparation, if specified, meet requirements.
Pre-installation verification testing	☐ Observe	☐ Perform	Observe and document verification testing by installation personnel for fastener assemblies and methods used.
Proper storage	☐ Observe	☐ Perform	Verify proper storage of bolts, nuts, washers, and other fastener components.
DURING BOLTING (TABLE N5.6-2, AISC 360-16):			
➢ *Not required if only snug-tight joints are specified [per Section N5.6(1) of AISC 360-16].*			
➢ *Not required for pretensioned joints using turn-of-the-nut method with match-marking, direct-tension-indicators, or twist-off type tension control method [per Section N5.6(2) of AISC 360-16].*			
Fastener assemblies	☐ Observe	☐ Perform	Verify that fastener assemblies are of suitable

DIVISION OF FACILITIES CONSTRUCTION & MANAGEMENT
Office of the State Building Official
4315 S 2700 W Taylorsville, UT 84129
Phone: (801) 538-3018
Website: http://dfcm.utah.gov/

			condition, paced in all holes, and washers are positioned as required.
Snug-tight prior to pretensioning	☐ Observe	☐ Perform	Verify that joints are brought to snug-tight condition prior to pretensioning operation.
Fastener component	☐ Observe	☐ Perform	Verify that fastener component is not turned by wrench prevented from rotating.
Pretensioned fasteners	☐ Observe	☐ Perform	Verify that fasteners are Pretensioned in accordance with RCSC Specification, progressing systematically from the most rigid point toward the free edges.
AFTER BOLTING (TABLE N5.6-3, AISC 360-16):			
Documentation	☐ Observe	☐ Perform	Document the acceptance or rejection of bolted connections.
OTHER STEEL INSPECTIONS (SECTION N5.7 & N5.8, AISC 360-16; Tables J8.1 & J10.1, AISC 341-16):			
Galvanized structural steel	☐ Observe	☐ Perform	
Structural steel details	☐ Observe	☐ Perform	
Anchor rods and other embedments supporting structural steel	☐ Observe	☐ Perform	
Reduced beam sections (RBS)	☐ Observe	☐ Perform	
Protected zones	☐ Observe	☐ Perform	
H-piles	☐ Observe	☐ Perform	
COMPOSITE CONSTRUCTION – STEEL & CONCRETE (TABLES J9.1, J9.2, J9.3 of AISC 341-16):			
Prior to concrete placement	☐ Observe	☐ Perform	Verify type and grade of reinforcing steel; carbon equivalent if other than A706 bars; proper reinforcing steel size, spacing and orientation; that bar has not been re-bent; bar is tied and supported; proper cleanances are provided; and composite member has required size.
During concrete placement	☐ Observe	☐ Perform	Verify appropriate mix design; limitations on water added to truck/pump; and proper placement techniques are used to limit segregation.
After concrete placement	☐ Observe	☐ Perform	Document that minimum concrete compressive strength was achieved at specified age.
STEEL ROOF AND FLOOR DECKS (IBC 1705.2.2 and SDI QA/QC—2017):			
Prior to metal deck attachment	☐ Observe	☐ Perform	Verify and document compliance of materials (deck and all deck accessories) with approved construction documents, including profiles, material properties, and base metal thickness.
After metal deck placement	☐ Observe	☐ Perform	Verify and document compliance of deck, and deck accessories, installation with the approved construction documents. Verify that mill certificates comply with approved construction documents.
Prior to welding	☐ Observe	☐ Perform	Verify that welding procedures and certifications of consumables are available, material is properly identified, and welding equipment is appropriate.
During welding	☐ Observe	☐ Perform	Verify that welders are qualified, proper handling of consumables is provided, that environmental conditions are acceptable and WPS is followed.

DIVISION OF FACILITIES CONSTRUCTION & MANAGEMENT
Office of the State Building Official
4315 S 2700 W Taylorsville, UT 84129
Phone: (801) 538-3018
Website: http://dfcm.utah.gov/

After welding	☐ Observe	☒ Perform	Verify size, location and appearance of welds. Verify that repair activities are acceptable.
Prior to mechanical fastening	☒ Observe	☐ Perform	Verify that manufacturer's installation instructions and tools are available. Verify proper storage of fasteners.
During mechanical fastening	☒ Observe	☐ Perform	Verify that fasteners are positioned appropriately and installed per manufacturer's instructions.
After mechanical fastening	☐ Continuous	☒ Periodic	Verify spacing and type of all fasteners. Verify that repair activities are acceptable.
OPEN-WEB STEEL JOISTS AND JOIST GIRDERS (IBC TABLE 1705.2.3):			
End connections – welded or bolted	☐ Continuous	☒ Periodic	Visual inspection to confirm that end connections conform to the approved construction documents.
Bridging – horizontal or diagonal	☐ Continuous	☒ Periodic	Visual inspection to confirm that bridging is provided per the approved construction documents.
COLD-FORMED STEEL CONSTRUCTION (IBC 1705.2.4, 1705.11.2, 1705.12.3, and 1705.12.9):			
Trusses spanning > 60-feet	☐ Continuous	☐ Periodic	
Wind-force-resisting systems or seismic-force-resisting systems	☐ Continuous	☐ Periodic	
Cold-formed steel special bolted moment frame	☐ Continuous	☐ Periodic	

CONCRETE CONSTRUCTION (IBC 1705.3 & 1705.12.1)

Please refer to drawing SE003.1 for further information re: Concrete Construction.

Item			*Detailed Instructions and Frequencies*
Reinforcing steel, including prestressing tendons	☐ Continuous	☒ Periodic	Verify prior to placing concrete that reinforcing is of specified type, grade and size; that it is free of oil, dirt and rust; that it is located and spaced properly; that hooks, bends, ties, stirrups and supplemental reinforcement are placed correctly; that lap lengths, stagger and offsets are provided, and that all mechanical connections are installed per the manufacturer's instructions and/or evaluation report.
Welding of reinforcing steel	☒ Continuous	☒ Periodic	Visually inspect all welds and also verify weldability of reinforcing steel based upon carbon equivalent and in accordance with AWS D1.4. Continuously inspect any welds over 5/16" thick.
Cast-in bolts & embeds	☐ Continuous	☒ Periodic	Inspection of anchors or embeds cast in concrete is required when allowable loads have been increased or where strength design is used.
Post-installed anchors or dowels	☒ Continuous	☒ Periodic	All post-installed anchors/dowels shall be specially inspected as required by the approved ICC-ES report. Horizontally or upwardly inclined anchors that resist sustained tension loads require continuous inspection and approved installers.
Use of required mix design	☐ Continuous	☒ Periodic	Verify that all mixes used comply with the approved construction documents; ACI 318: Ch. 19, 26.4.3, 26.4.4, and IBC 1904.1, 1904.2.
Concrete sampling for strength tests, slump, air content, and temperature	☒ Continuous	☐ Periodic	
Concrete & shotcrete placement	☒ Continuous	☐ Periodic	

DIVISION OF FACILITIES CONSTRUCTION & MANAGEMENT
Office of the State Building Official
4315 S 2700 W Taylorsville, UT 84129
Phone: (801) 538-3018
Website: http://dfcm.utah.gov/

Curing temperature and techniques	☐ Continuous	☒ Periodic	Verify that the ambient temperature for concrete is kept at > 50°F for at least 7 days after placement. High-early-strength concrete shall be kept at > 50°F for at least 3 days. Accelerated curing methods may be used (see ACI 318: 26.5.3-26.5.5). The ambient temperature for shotcrete shall be > 40°F for the same period of time as noted for concrete. Shotcrete shall be kept continuously moist for at least 24 hours after shotcreting. All concrete materials, reinforcement, forms, fillers, and ground shall be free from frost. In hot weather conditions ensure that appropriate measures are taken to avoid plastic shrinkage cracking and that the specified water/cement ratio is not exceeded.
Pre-stressed concrete	☐ Continuous	☐ Periodic	
Erection of precast concrete	☐ Continuous	☐ Periodic	
Precast concrete diaphragm connections or reinforcement classified as moderate or high deformability elements in seismic design category C-F	☐ Continuous	☐ Periodic	
Installation tolerances of precast concrete diaphragm connections	☐ Continuous	☐ Periodic	
Strength verification	☐ Continuous	☐ Periodic	
Formwork	☐ Continuous	☒ Periodic	Verify that the forms are placed plumb and conform to the shapes, lines, and dimensions of the members as required by the approved construction documents.

MASONRY CONSTRUCTION (IBC 1705.4)

Please refer to drawing SE003.1 for further information re: Masonry Construction.

Item			*Detailed Instructions and Frequencies*
PRIOR TO CONSTRUCTION (Table 3, TMS 602-16):			
Review material certificates, mix designs, test results and construction procedures	☐ Continuous	☒ Periodic	Verify that materials conform to the approved construction documents. Mix design, test results, material certificates, and construction procedures should be submitted to inspector for review. Mortar mix designs shall conform to ASTM C 270 while grout shall conform to ASTM C 476. Material certificates shall be provided for reinforcement; anchors, ties, fasteners, and metal accessories; masonry units; mortar and grout materials. Construction procedures for cold-weather or hot-weather construction shall be reviewed.
AS MASONRY CONSTRUCTION BEGINS (TABLE 4, TMS 602-16):			
Proportions of site-prepared mortar	☐ Continuous	☒ Periodic	Verify that mortar is of the type and color specified on the construction documents, that it conforms to ASTM C 270, and that it is mixed in accordance with Article 2.6 A of TMS-602-16.
Grade and size of prestressing tendons and anchorages	☐ Continuous	☒ Periodic	Verify that prestressing tendons comply with Article 2.4 B of TMS-602-16 and that anchorages, couplers, and end blocks comply with Article 2.4 H.

DIVISION OF FACILITIES CONSTRUCTION & MANAGEMENT
Office of the State Building Official
4315 S 2700 W Taylorsville, UT 84129
Phone: (801) 538-3018
Website: http://dfcm.utah.gov/

Reinforcement, connectors, and anchorages	☐ Continuous	☒ Periodic	Verify that reinforcement, connectors, and anchorages are of the proper grade, type and size in accordance with Article 3.4 of TMS-602-16. Prestressing tendons shall be placed per Article 3.6 A.
Prestressing technique	☐ Continuous	☒ Periodic	Verify that prestressing technique complies with Article 3.6 B of TMS-602-16.
Properties of thin-bed mortar for AAC masonry	☒ Continuous	☒ Periodic	Verify that mortar complies with Article 2.1 C of TMS-602-16. (If Risk Category IV this should be performed on a continuous basis.)
Sample panel	☒ Continuous	☒ Periodic	Verify that sample panels are properly constructed and that subsequent work conforms per Article 1.6 D of TMS-602-16. (If Risk Category IV this should be performed on a continuous basis.)
PRIOR TO GROUTING (TABLE 4, TMS 602-16):			
Grout space	☒ Continuous	☒ Periodic	Verify that grout space is free of mortar droppings, debris, loose aggregate, and other deleterious materials and that cleanouts are provided per Article 3.2 D and 3.2 F of TMS-602-16. (If Risk Category IV this should be performed on a continuous basis.)
Placement of prestressing tendons and anchorages	☐ Continuous	☒ Periodic	Verify that prestressing tendons and anchorages are installed per the approved construction documents and per Articles 2.4 and 3.6 of TMS-602-16.
Placement of reinforcement, connectors, and anchor bolts	☒ Continuous	☒ Periodic	Verify that reinforcement, joint reinforcement, wall ties, anchor bolts and veneer anchors are installed in accordance with the approved construction documents and Articles 3.2 E and 3.4 of TMS-602-16. (If Risk Category IV this should be performed on a continuous basis.)
Proportions of site-prepared grout and prestressing grout for bonded tendons	☐ Continuous	☒ Periodic	Verify that grout is proportioned per ASTM C 476 and has a slump between 8-11 inches. Self-consolidated grout shall not be proportioned onsite. (see Articles 2.6 B and 2.4 G.1.b of TMS-602-16.)
DURING MASONRY CONSTRUCTION (TABLE 4, TMS 602-16):			
Materials and procedures	☐ Continuous	☒ Periodic	Ensure that materials and procedures conform to the approved construction documents and Article 1.5 of TMS-602-16.
Placement of masonry units and mortar joint construction	☐ Continuous	☒ Periodic	Verify that masonry units are properly placed and that mortar joint construction conforms to Article 3.3 B of TMS-602-16.
Size and location of structural elements	☐ Continuous	☒ Periodic	Verify the locations of structural elements with respect to the approved plans and confirm that tolerances meet the requirements of Article 3.3 F of TMS-602-16.
Type, size, and location of anchors, including other details of anchorage of masonry to structural members, frames, or other construction.	☒ Continuous	☒ Periodic	Verify that correct anchorages and connections are provided per the approved plans and Sections 1.2.1, 6.2.1 and 6.3.1 of TMS-402-16. (If Risk Category IV this should be performed on a continuous basis.)
Welding of reinforcement	☒ Continuous	☐ Periodic	
Preparation, construction, and protection of masonry during cold weather (<40°F) or hot weather	☐ Continuous	☒ Periodic	Verify that cold-weather construction is performed in accordance with Article 1.8 C of TMS-602-16 and hot weather construction per Article 1.8 D of TMS-602-16.

DIVISION OF FACILITIES CONSTRUCTION & MANAGEMENT
Office of the State Building Official
4315 S 2700 W Taylorsville, UT 84129
Phone: (801) 538-3018
Website: http://dfcm.utah.gov/

(>90°F).			
Application and measurement of prestressing force	☒ Continuous	☐ Periodic	
Placement of grout and prestressing grout for bonded tendons is in compliance	☒ Continuous	☐ Periodic	
Placement of AAC masonry units and construction of thin-bed mortar joints	☐ Continuous	☒ Periodic	Verify that mortar is placed in accordance with Article 3.3 B.9 of TMS-602-16. (If Risk Category IV this should be performed on a continuous basis.)
Observation of grout specimens, mortar specimens, and/or prisms	☐ Continuous	☒ Periodic	Confirm that specimens/prisms are performed as required by Article 1.4 B of TMS-602-16. (If Risk Category IV this should be performed on a continuous basis.)
MINIMUM TESTING:			
Verification of f'_m and f'_{AAC}	☐ Continuous	☒ Periodic	Determine the compressive strength for each wythe by the "unit strength method" or by the "prism test method" as specified in Article 1.4 B of TMS 602-16 prior to construction. (For Risk Category IV buildings this should be verified at every 5,000ft² of construction.)
Verification of Slump Flow and Visual Stability Index (VSI) for self-consolidating grout	☐ Continuous	☒ Periodic	Compressive strength tests should be performed in accordance with ASTM C 1019 for slump flow and ASTM C 1611 for VSI.
Verification of proportions of materials in premixed or pre-blended mortar and grout	☐ Continuous	☒ Periodic	Verify that proportions for mortar meet ASTM C 270 and proportions for grout meet ASTM C 476. (This applies to Risk Category IV buildings only.)

WOOD CONSTRUCTION (IBC 1705.5, 1705.11.1 & 1705.12.2)

Item			*Detailed Instructions and Frequencies*
High-load diaphragms	☐ Continuous	☐ Periodic	
Wood trusses spanning > 60-feet	☐ Continuous	☐ Periodic	
Structural wood	☐ Continuous	☐ Periodic	

MASS TIMBER CONSTRUCTION (IBC 1705.5.3)

Item			*Detailed Instructions and Frequencies*
Anchorage of connections of mass timber to timber deep foundation systems.	☐ Continuous	☐ Periodic	
Erection of mass timber construction	☐ Continuous	☐ Periodic	
Sealing of mass timber	☐ Continuous	☐ Periodic	
Inspection of connections where installation methods are required to meet design loads	See below	See below	
Threaded fasteners	☐ Continuous	☐ Periodic	
Adhesive anchors installed horizontally or upwardly inclined to resist sustained tension	☐ Continuous	☐ Periodic	
Adhesive anchors installed downwardly inclined	☐ Continuous	☐ Periodic	

DIVISION OF FACILITIES CONSTRUCTION & MANAGEMENT
Office of the State Building Official
4315 S 2700 W Taylorsville, UT 84129
Phone: (801) 538-3018
Website: http://dfcm.utah.gov/

Bolted connections	☐ Continuous	☐ Periodic	
Concealed connections	☐ Continuous	☐ Periodic	

SOILS CONSTRUCTION (IBC 1705.6)

Please refer to drawing SE003.1 for further information re: Soils Construction.

Item			*Detailed Instructions and Frequencies*
Verify subgrade is adequate to achieve design bearing capacity	☐ Continuous	☒ Periodic	Prior to placement of concrete.
Verify excavations down to proper depth and material	☐ Continuous	☒ Periodic	Prior to placement of compacted fill or concrete.
Verify subgrade has been appropriately prepared prior to placing compacted fill	☐ Continuous	☒ Periodic	Prior to placement of compacted fill.
Perform classification and testing of compacted fill materials	☐ Continuous	☒ Periodic	All materials shall be checked at each lift for proper classifications and gradations not less than once for each 10,000ft² of surface area.
Verify proper materials, densities and lift thicknesses during placement and compaction.	☒ Continuous	☐ Periodic	Verify use of proper materials and procedures in accordance with the geotechnical report. Verify densities and lift thicknesses during placement and compaction of compacted fill.

DRIVEN DEEP FOUNDATIONS (IBC 1705.7)

Item			*Detailed Instructions and Frequencies*
Verify materials, sizes and lengths	☐ Continuous	☐ Periodic	
Determine capacities and conduct necessary load tests	☐ Continuous	☐ Periodic	
Observe driving operations	☐ Continuous	☐ Periodic	
Verify placement locations & plumbness, confirm type & size of hammer, record number of blows per foot, record tip and butt elevations and document any damage to element	☐ Continuous	☐ Periodic	
Perform additional inspections for steel, concrete or other specialty elements.	☐ Continuous	☐ Periodic	

CAST-IN-PLACE DEEP FOUNDATIONS (IBC 1705.8)

Item			*Detailed Instructions and Frequencies*
Observe drilling operation and reporting	☐ Continuous	☐ Periodic	
Verify placement locations & plumbness, confirm element diameters, lengths, embedment and adequate end-bearing capacity. Record concrete or grout volumes.	☐ Continuous	☐ Periodic	
Perform additional inspections for concrete elements.	☐ Continuous	☐ Periodic	

DIVISION OF FACILITIES CONSTRUCTION & MANAGEMENT
Office of the State Building Official
4315 S 2700 W Taylorsville, UT 84129
Phone: (801) 538-3018
Website: http://dfcm.utah.gov/

HELICAL PILE FOUNDATIONS (IBC 1705.9)

Item			*Detailed Instructions and Frequencies*
Record installation equipment used, pile dimensions, tip elevations, final depth, and final installation torque	☐ Continuous	☐ Periodic	
Verify that helical piles used match the approved submittal	☐ Continuous	☐ Periodic	

SPRAYED FIRE-RESISTANT MATERIALS (IBC 1705.15)

Item			*Detailed Instructions and Frequencies*
Surface preparation	☐ Continuous	☐ Periodic	
Material thickness	☐ Continuous	☐ Periodic	
Material density	☐ Continuous	☐ Periodic	
Bonding strength	☐ Continuous	☐ Periodic	

MASTIC AND INTUMESCENT FIRE-RESISTANT COATINGS (IBC 1705.16 & AWCI 12-B)

Item			*Detailed Instructions and Frequencies*
Surface preparation	☐ Continuous	☐ Periodic	
Thickness	☐ Continuous	☐ Periodic	

EXTERIOR INSULATION AND FINISH SYSTEMS (EIFS) (IBC 1705.17)

Item			*Detailed Instructions and Frequencies*
Material and installation	☐ Continuous	☐ Periodic	

FIRE-RESISTANT PENETRATIONS AND JOINTS (IBC 1705.18)

➢ *Only required for high-rise buildings or those assigned to Risk Category III or IV per IBC Table 1604.5 or in fire areas containing group R occupancies with an occupant load greater than 250.*

Item			*Detailed Instructions and Frequencies*
Penetration firestops	☐ Continuous	☐ Periodic	
Fire-resistant joint systems	☐ Continuous	☐ Periodic	

SMOKE CONTROL (IBC 1705.19)

Item			*Detailed Instructions and Frequencies*
Verify device locations and perform leakage testing	☐ Continuous	☐ Periodic	
Pressure difference testing, flow measurements and detection and control verification	☐ Continuous	☐ Periodic	

ARCHITECTURAL COMPONENTS (IBC 1705.13.5)

➢ *Only required for buildings located within Seismic Design Category D, E, or F.*

Item			*Detailed Instructions and Frequencies*
Erection and fastening of exterior cladding or interior and exterior veneers	☐ Continuous	☐ Periodic	
Erection and fastening of interior and exterior nonbearing walls	☐ Continuous	☐ Periodic	
Access floors	☐ Continuous	☐ Periodic	

DIVISION OF FACILITIES CONSTRUCTION & MANAGEMENT
Office of the State Building Official
4315 S 2700 W Taylorsville, UT 84129
Phone: (801) 538-3018
Website: http://dfcm.utah.gov/

STORAGE RACKS (IBC 1705.13.7)

➢ *Only required for buildings located within Seismic Design Category D, E, or F.*

Item			*Detailed Instructions and Frequencies*
Materials used	☐ Continuous	☐ Periodic	
Fabricated storage rack elements	☐ Continuous	☐ Periodic	
Storage rack anchorage installation.	☐ Continuous	☐ Periodic	
Completed storage rack system	☐ Continuous	☐ Periodic	

MECHANICAL & ELECTRICAL COMPONENTS (IBC 1705.13.6)

➢ *Only required for buildings located within Seismic Design Category C, D, E, or F.*

Item			*Detailed Instructions and Frequencies*
Anchorage of emergency or standby power systems	☐ Continuous	☐ Periodic	
Installation of piping systems carrying flammable, combustible or highly toxic materials	☐ Continuous	☐ Periodic	
Installation of HVAC ductwork containing hazardous materials	☐ Continuous	☐ Periodic	
Installation of vibration isolation systems having a clearance of ≤¼"	☐ Continuous	☐ Periodic	
Clearances to fire sprinkler drops and sprigs	☐ Continuous	☐ Periodic	
Designated seismic systems	☐ Continuous	☐ Periodic	

SEISMICALLY ISOLATED STRUCTURES (IBC 1705.13.8 & 1705.14.4)

Item			*Detailed Instructions and Frequencies*
Prototype tests	☐ Continuous	☐ Periodic	
Fabrication and installation	☐ Continuous	☐ Periodic	

SPECIAL CASES (IBC 1705.1.1) – material alternatives or unusual design applications

Item			*Detailed Instructions and Frequencies*
Material and installation	☐ Continuous	☐ Periodic	

MISCELLANEOUS AREAS

➢ *These inspections may be recommended by the Architect/Engineer and are to be approved by DFCM.*

Item			*Detailed Instructions and Frequencies*
Suspended Acoustical Ceilings	☐ Continuous	☐ Periodic	
Soil backfill (specify locations and frequency)	☐ Continuous	☐ Periodic	
Soils for curb and gutter (specify locations and frequency)	☐ Continuous	☐ Periodic	
Soils for parking lots (specify locations and frequency)	☐ Continuous	☐ Periodic	

DIVISION OF FACILITIES CONSTRUCTION & MANAGEMENT
Office of the State Building Official
4315 S 2700 W Taylorsville, UT 84129
Phone: (801) 538-3018
Website: http://dfcm.utah.gov/

Soils for utility trench backfill	☐ Continuous	☐ Periodic	
Reinforcement for slab on grade sidewalks and drive approaches (specify locations and frequency)	☐ Continuous	☐ Periodic	
Concrete testing for slab on grade sidewalks and drive approaches (specify locations and frequency)	☐ Continuous	☐ Periodic	
Concrete testing for interior slab on grade (specify locations and frequency)	☐ Continuous	☐ Periodic	
Asphalt inspection (specify locations and frequency)	☐ Continuous	☐ Periodic	
Asphalt testing (specify locations and frequency)	☐ Continuous	☐ Periodic	
Seismic supports for duct work and sealing of joints for duct work	☐ Continuous	☐ Periodic	
Seismic supports for electrical raceways, cable trays and lights	☐ Continuous	☐ Periodic	
Seismic supports for plumbing lines including gas, water and steam and condensation	☐ Continuous	☐ Periodic	
Seismic bracing for mechanical units both on slab and suspended	☐ Continuous	☐ Periodic	

Special Inspectors Shall:

- Be approved by the Building Official prior to performing any duties;
- Provide proof of licensure as a special inspector by the State of Utah for each type of inspection;
- Inspection reports are to meet the requirements of IBC 1704.2.4 and DFCM standards;
- Inspection reports are to be submitted to the code consultant, architect, DFCM project manager, and the State of Utah Building Official within 48 hours of performing inspections;
- A final inspection report shall be submitted following completion of the project documenting the types of special inspections performed and a statement indicating that the structure is in compliance with the approved construction documents and applicable codes (see IBC 1704.2.4).

CONTRACTOR'S STATEMENT OF RESPONSIBILITY (IBC 1704.4)

The following statement must be provided on the plans along with a signature from the contractor prior to permit issuance.

Each contractor involved with the construction of wind or seismic force-resisting systems shall comply with the requirements of IBC 1704.4. The contractor is responsible for providing the special inspector access to approved plans and contract documents at the job site. All special inspection records shall be retained at the job site by the contractor and shall be made available to the Building Department upon request.

Declaration by General Contractor

I, the General Contractor of the project, agree to comply with the "Contractor Responsibility" items noted above.

Signature _____ Date _____

DIVISION OF FACILITIES CONSTRUCTION & MANAGEMENT
Office of the State Building Official
4315 S 2700 W Taylorsville, UT 84129
Phone: (801) 538-3018
Website: http://dfcm.utah.gov/

STRUCTURAL OBSERVATIONS (IBC 1704.6)

Please refer to drawing SE002.1 for further information re: Structural Observations.

Item		*Proposed Frequency*	*Name of Structural Observer*
Footings, Slabs on Grade, & Concrete over Steel Deck	☒ Required	At initial placement.	Dunn Associates.
Masonry Walls	☒ Required	At initial grout pours.	Dunn Associates.
Structural Steel	☒ Required	At initial erection.	Dunn Associates.
Structural Roof Deck	☒ Required	At completion.	Dunn Associates.

Structural Observer's Shall:

- Provide proof of licensure as a licensed professional/structural engineer by the State of Utah;
- If structural observations are performed by individuals other than the design professional in responsible charge, they should first be approved by the Building Official.
- At the conclusion of work a final structural observation report must be submitted to the Building Official noting any deficiencies which, to the best of the structural observer's knowledge, have not been resolved (see IBC 1704.6).

Last Revised: 8/2023

8/29/2024 5:09:42 PM

CRSA

PROJECT **24-038**

BID PACKAGE #1 2024-08-26

REVISIONS

NO.	DATE	DESCRIPTION

REVIEWED FOR CODE COMPLIANCE
8/29/2024
DIVISION OF FACILITIES CONSTRUCTION AND MANAGEMENT

DAVIS TECHNICAL COLLEGE WELDING TECHNOLOGY BUILDING
355 SOUTH 650 EAST
KAYSVILLE, UT 84037

DAVISTECH
DAVIS TECHNICAL COLLEGE

STATE OF UTAH
JEFFREY D. DAVIS
9742226-0301
LICENSED ARCHITECT

SPECIAL INSPECTIONS
GI003.1

GENERAL NOTES

- GENERAL CONTRACTOR SHALL FIELD VERIFY ALL CONDITIONS AND SHALL REPORT TO THE ARCHITECT ANY UNKNOWN CONDITIONS, ERRORS OR CONFLICT IN THE DRAWINGS BEFORE BEGINNING WORK.
- DO NOT SCALE DRAWINGS
- ITEMS HALF-TONED SHOWN FOR REFERENCE ONLY.

CRSA

PROJECT **24-038**

BID PACKAGE #1 2024-08-26

REVISIONS

NO.	DATE	DESCRIPTION
1	2024-09-06	ADDENDUM #01

CODE PLAN LEGEND

- ASSEMBLY GROUP A - SMALL ASSEMBLY SPACE (OCCUPANT LOAD < 50) - FIXED SEATS
- BUSINESS AREAS (150 GROSS)
- ACCESSORY STORAGE AREAS, MECHANICAL EQUIPMENT ROOM (300 GROSS)
- COMMON PATH OF TRAVEL
- TOTAL PATH OF TRAVEL

KEYNOTES

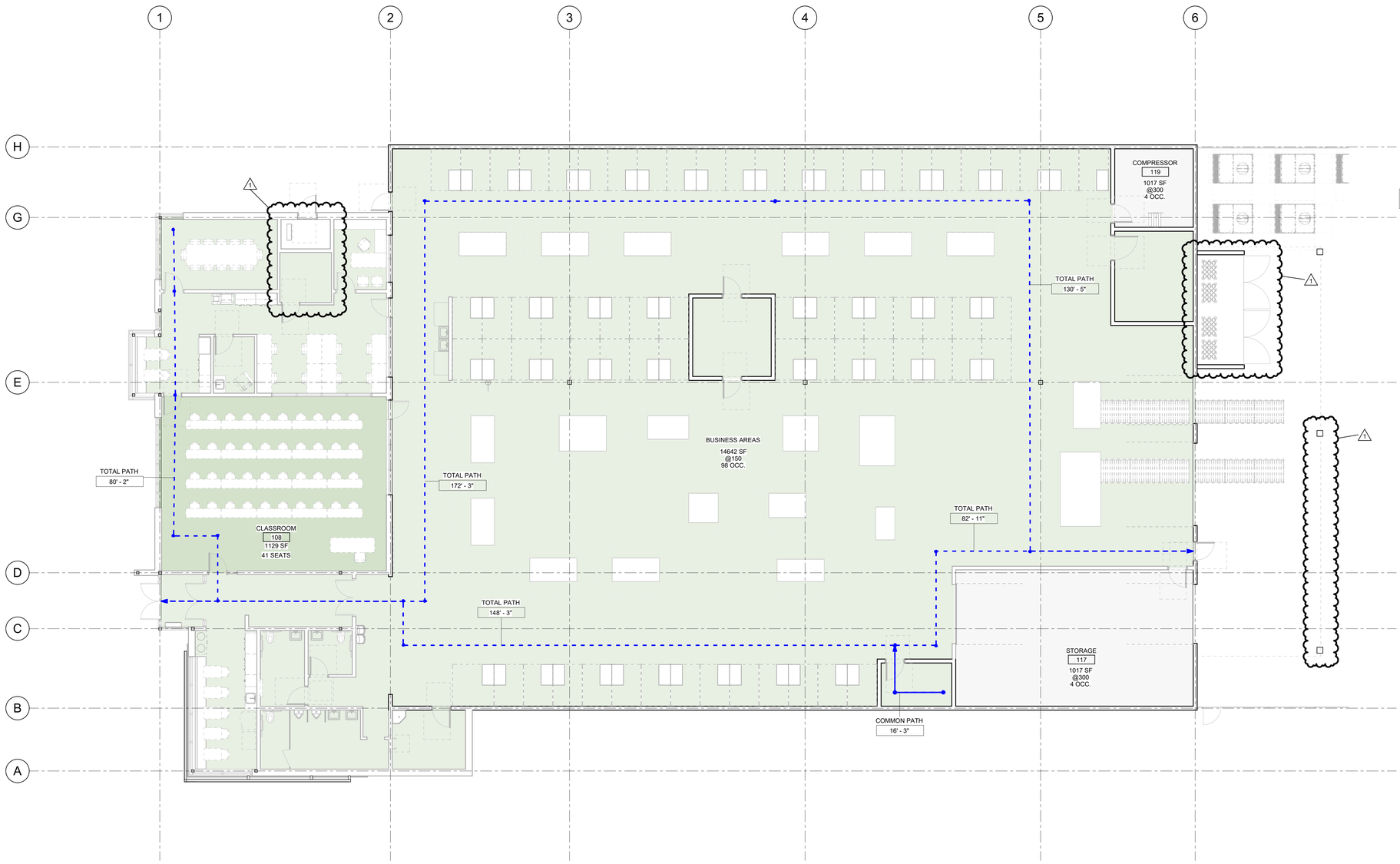

A1 GI101.1 LEVEL 1 FLOOR PLAN
1/8" = 1'-0"

REVIEWED FOR CODE COMPLIANCE
STATE OF UTAH
JEFFREY D. BAIRD
9742226-0301
LICENSED ARCHITECT

DAVIS TECHNICAL COLLEGE WELDING TECHNOLOGY BUILDING

355 SOUTH 650 EAST
KAYSVILLE, UT 84037

DAVISTECH
DAVIS TECHNICAL COLLEGE

LEVEL 1 CODE PLAN

GI101.1

GENERAL NOTES

SPECIAL PROJECT NOTE:

- ALL CONSTRUCTION ACTIVITY FOR SITE WATER LINES AND SEWER LINES SHALL CONFORM TO KAYSVILLE CITY AND CENTRAL DAVIS SEWER DISTRICT STANDARD PLANS AND "APWA MANUAL OF STANDARD PLANS" (LATEST EDITION) AND THE DEVELOPMENT GUIDELINES AND SPECIFICATIONS. CONTRACTOR SHALL OBTAIN COPIES OF SAID CITY AND DISTRICT STANDARDS AND APWA STANDARDS PRIOR TO CONSTRUCTION.

GENERAL

1. ANY MODIFICATION TO THIS CONSTRUCTION PACKAGE SHALL BE APPROVED BY THE OWNER, PRIOR TO SAID APPROVAL, ALL IMPROVEMENT DRAWINGS SHALL BE RESUBMITTED AND APPROVED BY THE CITY ENGINEER.
2. THE CONTRACTOR SHALL LOCATE, RETAIN AND PROTECT ALL EXISTING UTILITIES UNLESS OTHERWISE DIRECTED BY THE ENGINEER, EXISTING GAS, TELEPHONE, POWER, OR WATERLINES WHICH MUST BE RELOCATED OR LOWERED FOR NEW GRAVITY LINES WILL BE COMPLETED BY THE CONTRACTOR TO THE UTILITY COMPANY SPECIFICATIONS.
3. ALL SUITABLE EXCAVATION MATERIAL MAY BE STOCKPILED ON LANDSCAPE AREAS (NOT OVER 3' DEEP) AND GRADED TO DRAIN. EXCESS TOPSOIL SHALL BE REMOVED AND STORED AS INDICATED ON THE LANDSCAPE PLANS. SUITABLE MATERIAL IS DEFINED IN THE PROJECT GEOTECHNICAL REPORT PREPARED FOR THIS PROJECT AS WELL AS CITY EARTHWORK SPECIFICATIONS. ALL EARTHWORK SHALL BE COMPLIANT WITH THESE DOCUMENTS. IF CITY SPECIFICATIONS AND THE GEOTECHNICAL REPORT ARE IN CONFLICT REFER TO THE CITY ENGINEER FOR DIRECTION ON WHICH REQUIREMENTS MUST BE FOLLOWED IN THE FIELD.
4. TRACER TAPE SHALL BE PLACED ABOVE ALL SEWER, PVC ROOF DRAIN LINES. WATER AND SECONDARY WATER LINES PER CITY AND DISTRICT STANDARD SPECIFICATIONS. TRACER WIRE SHALL BE INSTALLED OVER THE WATER LINES.
5. ALL EXISTING UTILITIES ARE SHOWN IN APPROXIMATE LOCATIONS ONLY. AS INDICATED ON THE C200 SHEET. CONTRACTOR SHALL NOTIFY BLUE STAKES 48 HOURS IN ADVANCE OF ANY CONSTRUCTION. CONTRACTOR SHALL POTHOLE AND FIELD VERIFY ALL UTILITY LOCATIONS PRIOR TO CONSTRUCTION. CONTRACTOR SHALL NOTIFY ENGINEER OF ALL UTILITY CONFLICTS UPON DISCOVERY.
6. CONTRACTOR SHALL BE RESPONSIBLE FOR PROPER BACKFILLING, COMPACTING, AND PAVEMENT RESTORATION WHERE NECESSARY TO INSTALL NEW UTILITIES OR NEW IMPROVEMENTS PER CITY STANDARDS IN EXISTING ROADWAYS.
7. CONTRACTOR SHALL PROVIDE CITY INSPECTOR WITH CONSTRUCTION SCHEDULE AFTER SAID SCHEDULE HAS BEEN APPROVED BY OWNER.
8. CONTRACTOR SHALL COORDINATE CONSTRUCTION DEMOLITION AND INSTALLATION OF ELECTRICAL AND COMMUNICATION SERVICES WITH THE UTILITY COMPANY. OWNER SHALL PAY ALL ASSOCIATED UTILITY COMPANY FEES. CONTRACTOR TO PROVIDE ELECTRICAL LINE DIR COMMUNICATION TRENCHING AND BACKFILL. COORDINATE LOCATIONS WITH POWER AND COMMUNICATION COMPANY. ALL DEMOLITION OF EXISTING AND PROPOSED NEW SITE ELECTRICAL EQUIPMENT STRUCTURES AND LINES SHOWN ON CIVIL PLANS ARE SCHEMATICALLY SHOWN ONLY AS A COORDINATION BETWEEN ELECTRICAL AND CIVIL. PLEASE REFER DIRECTLY TO ELECTRICAL PLANS FOR THE LAYOUT AND DETAILS OF ALL SITE ELECTRICAL EQUIPMENT AND LINES.
9. CONTRACTOR TO KEEP A SET OF NEAT PLANS ON WHICH ALL CHANGES HAVE BEEN CLEARLY SHOWN. THIS SET OF REDLINES SHALL BE TURNED IN TO THE ARCHITECT.
10. CONTRACTOR TO SCHEDULE A PRE-CONSTRUCTION MEETING WITH THE CITY PRIOR TO ANY WORK.
11. ALL UTILITY STRUCTURES WITHIN PAVEMENT SHALL BE RAISED TO ACCURATE FINISHED GRADE WITH A CONCRETE COLLAR. SEE DETAIL ON SHEET C101.
12. PRIOR TO STARTING CONSTRUCTION, THE CONTRACTOR SHALL BE RESPONSIBLE TO MAKE SURE THAT ALL REQUIRED PERMITS, BONDS, AND APPROVALS HAVE BEEN OBTAINED. ALL PERMIT AND BOND FEES ARE TO BE PAID BY THE OWNER.
13. NO CONSTRUCTION OR FABRICATION SHALL BEGIN UNTIL THE CONTRACTOR HAS RECEIVED, AND THOROUGHLY REVIEWED, ALL PLANS AND OTHER DOCUMENTS APPROVED BY ALL OF THE PERMITTING AUTHORITIES.
14. ALL WORK SHALL BE PERFORMED IN ACCORDANCE WITH THESE PLANS AND SPECIFICATIONS AND THE CURRENT REQUIREMENTS AND DEVELOPMENT STANDARDS OF THE CITY. THE SOILS REPORT AND RECOMMENDATIONS SET FORTH THEREIN ARE A PART OF THE REQUIRED CONSTRUCTION DOCUMENTS AND SHALL TAKE PRECEDENCE IN CASE OF CONFLICT UNLESS SPECIFICALLY NOTED OTHERWISE ON THE PLANS. THE CONTRACTOR SHALL NOTIFY THE ARCHITECT OF ANY DISCREPANCY BETWEEN THE SOILS REPORT AND PLANS ETC.
15. CONTRACTOR SHALL BE RESPONSIBLE FOR DUST AND EROSION CONTROL, CLEANING STREET AND OTHER SWPP REGULATIONS.
16. ALL EXISTING ASPHALT TO REMAIN SHALL BE SAW CUT IN NEAT, STRAIGHT LINES BY THE CONTRACTOR PRIOR TO EXCAVATION.
17. NO CHANGE IN DESIGN LOCATIONS OR GRADE WILL BE MADE BY THE CONTRACTOR WITHOUT THE WRITTEN APPROVAL OF THE OWNER AND ENGINEER.
18. CONTRACTOR SHALL NOT ALLOW ANY GROUND WATER, SURFACE WATER, ANIMALS, OR DEBRIS TO ENTER NEW PIPING DURING CONSTRUCTION.
19. CONTRACTOR SHALL TAKE NECESSARY MEASURES TO PROTECT ALL NEW FACILITIES DURING THE CONSTRUCTION PERIOD UNTIL THE DESIGN GRADE AND COVER HAVE BEEN REACHED AND WORK HAS BEEN ACCEPTED BY OWNER.
20. CONTRACTOR IS TO REMAIN WITHIN THE CONTRACT LIMITS. CONTRACTOR SHALL BE RESPONSIBLE FOR ANY DAMAGE TO ADJACENT SURFACE IMPROVEMENTS DURING CONSTRUCTION.
21. CONTRACTOR SHALL BE RESPONSIBLE FOR CORRECTING ANY SETTLEMENT OF, OR DAMAGE TO, EXISTING AND NEW UTILITIES AND FACILITIES, INCLUDING WORK DONE WITHIN THE WARRANTY PERIOD.
22. ALL ONSITE PAVEMENT SECTIONS, GRADING, EXCAVATION, BACKFILLING, AND OTHER EARTHWORK OPERATIONS SHALL BE IN ACCORDANCE WITH PROJECT SPECIFICATIONS PREPARED FOR THIS PROJECT. STRUCTURAL FILL, BEDDING, IMPORTED BACKFILL, GRANULAR SUBBASE, BASE COURSE AND ASPHALTIC CONCRETE MATERIALS SHALL MEET THE REQUIREMENTS OUTLINED IN THE PROJECT SPECIFICATIONS. ALL EARTHWORK AND PAVING IN CITY R.O.W. SHALL MEET CITY SPEC'S.
23. COORDINATE GAS INSTALLATION WITH THE GAS COMPANY. GAS COMPANY WILL ROUTE GAS TO THE METER LOCATION SHOWN ON THE PLANS. ACCOMMODATE GAS COMPANY CONTRACTOR ON SITE DURING GAS LINE INSTALLATION.
24. SEE SHEET C200 FOR SURVEY CONTROL. THE CONTRACTOR IS RESPONSIBLE FOR ALL CONSTRUCTION STAKING THAT MAY BE NEEDED TO COMPLETE THE JOB.
25. CONTRACTOR SHALL BE RESPONSIBLE FOR OBTAINING ALL APPLICABLE PERMITS AND TRAFFIC PERMITS AND TRAFFIC CONTROL PLANS FOR ALL WORK IN CITY R.O.W. (EXISTING AND NEW ROADWAYS) PRIOR TO BEGINNING WORK.
26. CONTRACTOR SHALL COORDINATE CONSTRUCTION AND INSTALLATION OF ELECTRICAL, TELEPHONE, NATURAL GAS, AND SERVICES WITH THE UTILITY COMPANY. ASSOCIATED UTILITY COMPANY FEES WILL BE PAID AS OUTLINED IN CONTRACT GENERAL CONDITIONS. CONTRACTOR TO PROVIDE ELECTRICAL AND TELEPHONE LINE TRENCHING AND BACKFILL. COORDINATE LOCATIONS WITH ROCKY MOUNTAIN POWER AND CENTURY LINK. COORDINATE AND SCHEDULE WITH ENBRIDGE GAS. CENTURY LINK, AND ROCKY MOUNTAIN POWER FOR CONNECTION OF THESE UTILITIES TO THE NEW BUILDING. GAS, TELEPHONE AND POWER ALL MUST BE EXTENDED TO THE SITE FROM THE NEW DEVELOPMENT IN THE AREA. COORDINATE WITH THESE UTILITIES FOR LOCATION OF THESE NEW EXTENSIONS.
27. THE USE OF MOTOR OILS AND OTHER PETROLEUM-BASED OR TOXIC LIQUIDS. FOR DUST SUPPRESSION IS ABSOLUTELY PROHIBITED.
28. NO DRIVEWAY SHALL BE CONSTRUCTED TO CONVEY STORM RUNOFF TOWARDS ANY BUILDING.
29. CONTRACTOR SHALL BE RESPONSIBLE FOR FURNISHING, MAINTAINING, OR RESTORING ALL MONUMENTS AND MONUMENT REFERENCE MARKS WITHIN THE PROJECT SITE. CONTACT THE CITY OR COUNTY SURVEYOR FOR MONUMENT LOCATIONS AND CONSTRUCTION DETAILS.
30. THE CONTRACTOR IS SOLELY RESPONSIBLE FOR CONFORMING TO LOCAL AND FEDERAL CODES GOVERNING SHORING AND BRACING OF EXCAVATIONS AND TRENCHES AND FOR THE PROTECTION OF WORKERS.
31. CONTACT FOR UTILITY COORDINATION INCLUDE:
    - SEWER- CENTRAL DAVIS SEWER DISTRICT: 801-451-2190
    - WATER- KAYSVILLE PUBLIC WORKS: 801-544-8112
    - STORM- KAYSVILLE PUBLIC WORKS STORM WATER HOTLINE: 801-497-7125
    - IRRIGATION- HAIGHTS CREEK IRRIGATION: 801-546-4242
    - GAS- ENBRIDGE GAS: 800-323-5517
    - POWER- KAYSVILLE CITY POWER AND LIGHT: 801-544-8825
32. THERE IS NO LANDSCAPE DEMOLITION PLAN OR REPAIR PLAN IN THIS PACKAGE. CONTRACTOR IS EXPECTED TO REMOVE AND REPLACE EXISTING LANDSCAPE AND SPRINKLER SYSTEM WITHIN THE PROJECT LIMIT LINE OF THE AFFECTED AREAS. COORDINATE WITH OWNER. A MINIMUM OF 4" TOPSOIL IS REQUIRED UNDER ALL NEW SOD. THE REVISED SPRINKLER SYSTEM FOR THE AFFECTED AREAS SOUTH OF THE NEW SITE TO MATCH THE EXISTING SYSTEM (SPRINKLER HEADS, VALVING, AND PIPE SIZE). REFER TO THE LANDSCAPE PLANS FOR NEW IRRIGATION SYSTEM ON SITE AND FOR REPAIR TO THE SYSTEM SOUTH OF THE NEW SITE.
33. CONTRACTOR TO COORDINATE INSTALLATION OF ALL LANDSCAPE SLEEVES PRIOR TO FORMING CONCRETE SIDEWALKS, RETAINING WALLS, SEAT WALLS OR STAIR WALLS. SEE LANDSCAPE PLANS.

SYMBOL LEGEND

- YARD HYDRANT
- FIRE HYDRANT
- WATER VALVE
- WATER METER
- POST INDICATOR VALVE
- FIRE DEPARTMENT CONNECTION
- WATER CAP
- WATER TEE
- WATER CROSS
- WATER WYE
- WATER REDUCER
- WATER BENDS
- AREA DRAIN (SIZE PER PLAN)
- CATCH BASIN (SIZE PER PLAN)
- PRE-TREATMENT CURB INLET BOX (PRE-TREAT CIB)
- CURB INLET BOX (CIB)
- COMBO BOX (COMBO)
- STORM DRAIN FLARED END SECTION
- STORM DRAIN / SANITARY SEWER CLEANOUT
- 4'Ø STORM DRAIN /SANITARY SEWER MANHOLE
- 5'Ø STORM DRAIN /SANITARY SEWER MANHOLE
- ELECTRIC METER
- GAS METER
- LIGHT POLE
- DOUBLE LIGHT POLE
- CURB & GUTTER (24")
- CURB WALL (6")
- SPOT ELEVATION (33.05 TBC)
- HANDICAPPED PARKING
- STOP BAR
- PAVEMENT MARKING
- POWER POLE
- SIGN
- CLEANOUT BOX
- THREE CHAMBER PRE-TREATMENT BOX
- OVERFLOW BOX
- DECORATIVE SITE LIGHTING

LINE LEGEND

PROPOSED	EXISTING	
		PROPERTY LINE
		LIMITS OF PROJECT
		MATCHLINE
		CENTERLINE
		SAW CUT LINE
4435	4435	PROPOSED MAJOR CONTOUR
4434	4434	PROPOSED MINOR CONTOUR
SS	SS	SANITARY SEWER PIPELINE
SD	SD	STORM DRAIN PIPELINE
LD	LD	LAND DRAIN
T	T	TELEPHONE
W	W	WATER PIPELINE
IRR	IRR	SECONDARY WATER PIPELINE
G	G	GAS PIPELINE
P	P	BURIED POWER
CATV	CTV	CATV
FO	FO	FIBER OPTIC
RIDGE	RIDGE	RIDGE LINE
X		FLOW LINE
SF		FENCE
XX	XX	SILT FENCE
		TEMPORARY SHORING
		REMOVAL
		ABANDON

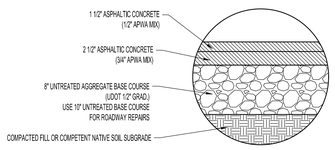

NOTES:
1. USE FOR PARKING AREAS OR OTHER ONSITE PAVING.
2. PROOF ROLL NATURAL SUBGRADE PER SPEC'S.
3. PAVEMENT CONSTRUCTION DURING WET PERIODS WILL REQUIRE 12" OF GRANULAR FILL MATERIAL PLACED DIRECTLY BELOW THE GRANULAR FILL SUBBASE LAYER. INSTALL GEOTEXTILE FABRIC (MIRAFI RS 380i OR EQUIVALENT) WHERE SUBGRADE COMPACTION IS NOT FEASIBLE. PROVIDE ADDITIONAL FILL & FABRIC IF NECESSARY FOR COMPLETION SCHEDULE AT NO ADDITIONAL COST TO OWNER.
4. ASPHALT MIX TO COMPLY WITH APWA SPECIFICATIONS.
5. STREET REPAIR IN CITY RIGHT OF WAY TO MEET CITY STANDARD. ROADWAY REPAIR ON SITE TO INCREASE AGGREGATE BASE TO 10".

ASPHALT PAVEMENT SECTION (ON SITE ONLY) — N.T.S. — A

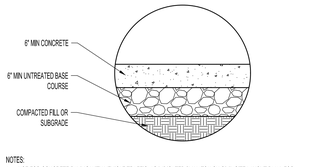

NOTES:
1. USE FOR CONCRETE PAVING WITH VEHICLE TRAFFIC. AS INDICATED BY HATCH ON CIVIL SITE LAYOUT PLAN. FOR DUMPSTER PADS AND DRIVEWAYS INCREASE CONCRETE TO 7" THICKNESS AS NOTED ON PLANS. REFER TO ARCHITECTURAL SPEC'S.
2. PROOF ROLL NATURAL SUBGRADE PER SPEC'S.
3. PAVEMENT CONSTRUCTION DURING WET PERIODS WILL REQUIRE 12" OF GRANULAR FILL MATERIAL PLACED DIRECTLY BELOW THE GRANULAR FILL SUBBASE LAYER. INSTALL GEOTEXTILE FABRIC (MIRAFI RS 380i OR EQUIVALENT) WHERE SUBGRADE COMPACTION IS NOT FEASIBLE. PROVIDE ADDITIONAL FILL & FABRIC IF NECESSARY FOR COMPLETION SCHEDULE AT NO ADDITIONAL COST TO OWNER.
4. SEALED CONTRACTION JOINTS TO BE 1/4" DEEP. JOINT PATTERN AS OUTLINED ON ARCHITECTURAL SITE PLANS. 15' MAXIMUM SPACING
5. SEAL ALL EXPANSION JOINTS PER SPEC'S.

CONCRETE PAVEMENT SECTION (ON SITE ONLY) — N.T.S. — B

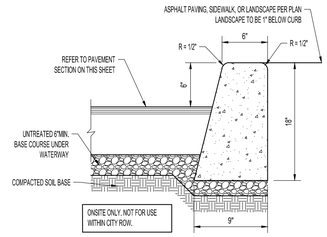

NOTES:
1. CONCRETE SHALL BE MONOLITHIC 4500 PSI @ 28 DAYS (6% AIR ENTRAINED).
2. PLACE EXPANSION-CONTRACTION JOINTS AT ALL BC AND EC POINTS. PLACE CONTROL JOINTS AT 10' INTERVALS.
3. PLACE JOINT FILLER STRIPS BETWEEN WALK AND CURB TO DEPTH OF CONCRETE PLUS ONE INCH WITH TIP SET FLUSH WITH TOP BACK OF CURB.
4. REMOVE NON-ENGINEERED FILL BELOW CURB AND 2' MINIMUM BEYOND THE EDGE OF CONCRETE AND REPLACE STRUCTURAL FILL. REFER TO SPEC. SECTION 312000 FOR SUBGRADES PREPARATION OVEREXCAVATION REQUIREMENTS.
5. ABRUPT ELEVATION CHANGES SHOULD BE SMOOTHED IN CURBS.

CURB DETAIL — N.T.S. — C

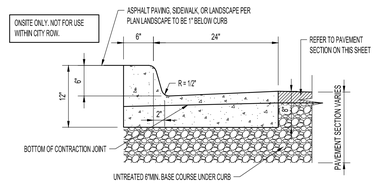

NOTES:
1. CONCRETE SHALL BE MONOLITHIC 4500 PSI @ 28 DAYS (6% AIR ENTRAINED).
2. PLACE EXPANSION-CONTRACTION JOINTS AT ALL BC AND EC POINTS. PLACE CONTROL JOINTS AT 10' INTERVALS.
3. PLACE JOINT FILLER STRIPS BETWEEN WALK AND CURB TO DEPTH OF CONCRETE PLUS ONE INCH WITH TIP SET FLUSH WITH TOP BACK OF CURB.
4. REMOVE NON-ENGINEERED FILL BELOW CURB AND 2' MINIMUM BEYOND THE EDGE OF CONCRETE AND REPLACE STRUCTURAL FILL. REFER TO SPEC. SECTION 312000 FOR SUBGRADES PREPARATION OVEREXCAVATION REQUIREMENTS.
5. ALL COLD JOINTS ON SITE NEED TO BE DOWELED.

CURB & GUTTER — N.T.S. — D

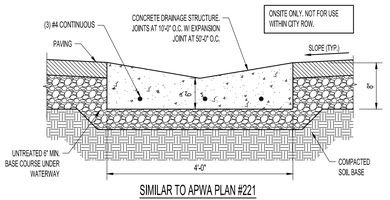

SIMILAR TO APWA PLAN #221

NOTES:
1. CONCRETE SHALL BE MONOLITHIC 4500 PSI @ 28 DAYS (6% AIR ENTRAINED).
2. PLACE EXPANSION-CONTRACTION JOINTS AT ALL BC AND EC POINTS. PLACE CONTROL JOINTS AT 10' INTERVALS.
3. PLACE JOINT FILLER STRIPS BETWEEN WALK AND CURB TO DEPTH OF CONCRETE PLUS ONE INCH WITH TIP SET FLUSH WITH TOP BACK OF CURB.
4. REMOVE NON-ENGINEERED FILL BELOW CURB AND 2' MINIMUM BEYOND THE EDGE OF CONCRETE AND REPLACE STRUCTURAL FILL. REFER TO SPEC. SECTION 312000 FOR SUBGRADES PREPARATION OVEREXCAVATION REQUIREMENTS.
5. ALL COLD JOINTS ON SITE NEED TO BE DOWELED.

4' WATERWAY — N.T.S. — E

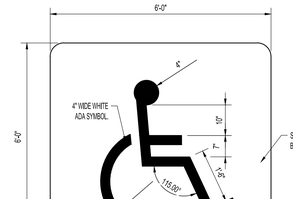

D-08-310-3012

PAINTED ADA SYMBOL — N.T.S. — F

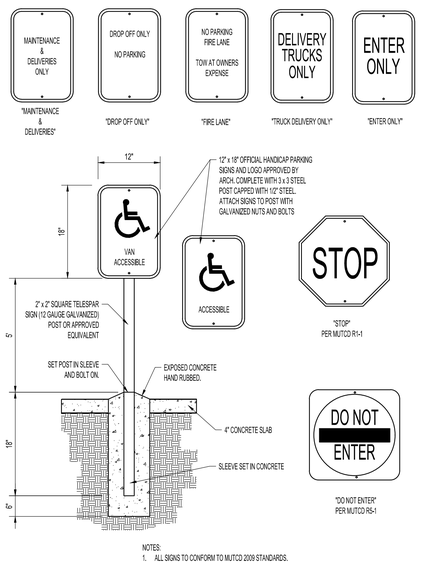

NOTES:
1. ALL SIGNS TO CONFORM TO MUTCD 2009 STANDARDS.

SIGN DETAIL — N.T.S. — G

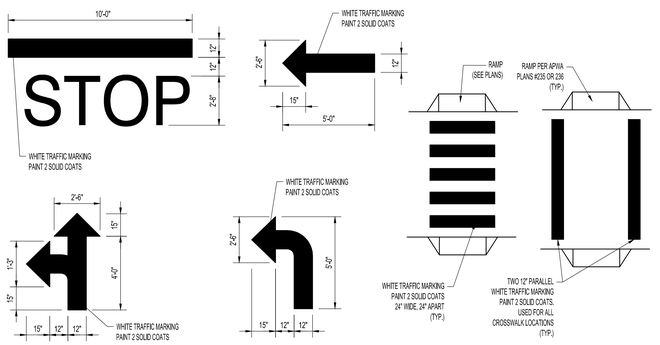

PAINTED TRAFFIC MARKINGS — N.T.S. — H

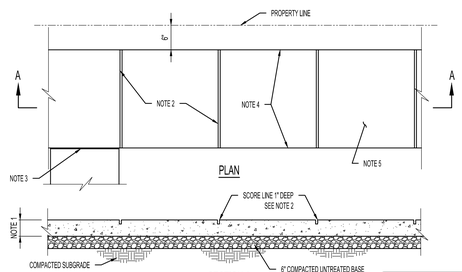

NOTES:
1. USE MONOLITHIC CONSTRUCTION 4" THICK EXCEPT AT DRIVEWAYS WHERE THICKNESS OF 7" IS REQUIRED.
2. SAWCUT AND CHAMFER SCORE LINES AT INTERVALS EQUAL TO 1 TIMES THE WIDTH OF THE SIDEWALK UNIFORMLY PLACED ALONG LENGTH OF SIDEWALK AFTER POUR. SAW CUTTING SHOULD BE DONE 4 TO 12 HOURS AFTER THE CONCRETE HAS BEEN FINISHED, IN HOT WEATHER EARLY-ENTRY DRY-CUT JOINTS SHOULD BE CUT 1 TO 4 HOURS AFTER FINISHING.
3. SIDEWALK EXPANSION JOINTS SHALL BE 20' ON CENTER MAXIMUM. THE EXPANSION JOINT SHALL INCLUDE ASPHALT IMPREGNATED FIBER EXPANSION MATERIAL. THE CONTRACTOR WILL USE BOND BREAKER TAPE WITH POLYURETHANE JOINT SEALANT TO A DEPTH OF 3/8".
4. EDGE SIDEWALK WITH 1/2" RADIUS EDGING TOOL. ROUND EDGES AT EXPANSION JOINTS TO A RADIUS OF 1/2".
5. USE HAIR-BROOM BRUSH TO FINISH SIDEWALKS.
6. OVER NEWLY BACKFILLED TRENCHES. PLACEMENT OF 2-1/2' #4 BARS IN SIDEWALK IS REQUIRED.
7. REMOVE NONENGINEER FILL BELOW SIDEWALK AND 2' MINIMUM BEYOND THE EDGE OF CONCRETE AND REPLACE WITH STRUCTURAL FILL.
8. ALL CONCRETE SIDEWALK SLABS SHALL BE DOWELED TO ADJACENT SLABS WITH REBAR DOWELS AT EXPANSION JOINTS OR ANY BREAK IN THE POUR. DOWELS ARE TO BE EVENLY SPACED WITH MAXIMUM DISTANCE BETWEEN DOWELS NOT TO EXCEED 24". REBAR DOWELS MUST BE #4 OR LARGER AND AT LEAST 24" LONG. DOWELS MUST BE EMBEDDED AT LEAST 3" DEEP AND NO CLOSER THAN 6" FROM THE EDGE OF THE SLAB.

CONCRETE SIDEWALK — N.T.S. — I

REVIEWED FOR CODE COMPLIANCE
Reviewed By: Jason W Peterson
Date: 09/09/2024
DAVIS COUNTY COMMUNITY DEVELOPMENT

CRSA

PROJECT 24-038

BID PACKAGE #1 2024-08-26

REVISIONS

NO.	DATE	DESCRIPTION
1	09/09/2024	ADDENDUM #1

DAVIS TECHNICAL COLLEGE
WELDING TECHNOLOGY BUILDING
550 EAST 300 SOUTH,
KAYSVILLE, UT 84037

DAVISTECH
DAVIS TECHNICAL COLLEGE

STATE OF UTAH
Jason W Peterson
13775865-2202
PROFESSIONAL ENGINEER

GENERAL NOTES AND DETAILS

C100.1

(801) 355-5915

MERIDIAN ENGINEERING, INC.
1628 WEST 1200 SOUTH, SUITE 100
OGDEN, UTAH 84404
PHONE: (801) 508-5315 FAX: (801) 359-1319

Blue Stakes of Utah 811
Know what's below. Call before you dig.

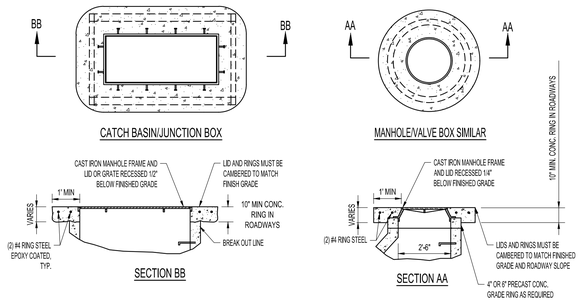

CONCRETE RING AROUND SURFACE UTILITY STRUCTURES
N.T.S. **A**

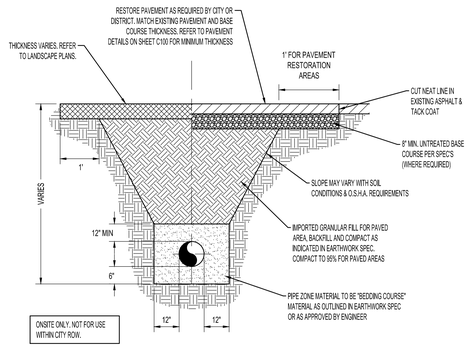

TYPICAL TRENCH AND SURFACE REPAIR
N.T.S. **B**

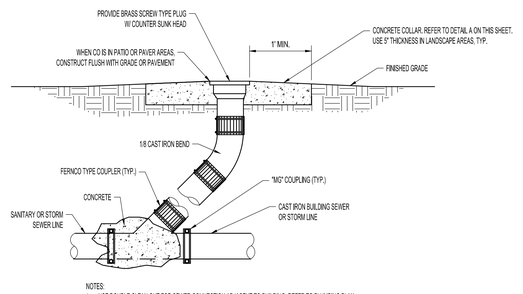

NOTES:
1. USE DOUBLE CLEAN OUT FOR SEWER CONNECTION ADJACENT TO BUILDING. REFER TO PLUMBING PLAN FOR DETAIL OF DOUBLE CLEAN OUT.

STORM/SANITARY SEWER CLEAN OUT
N.T.S. **C**

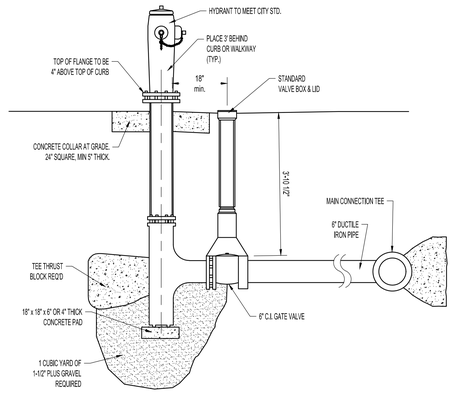

FIRE HYDRANT CONNECTION
N.T.S. **D**

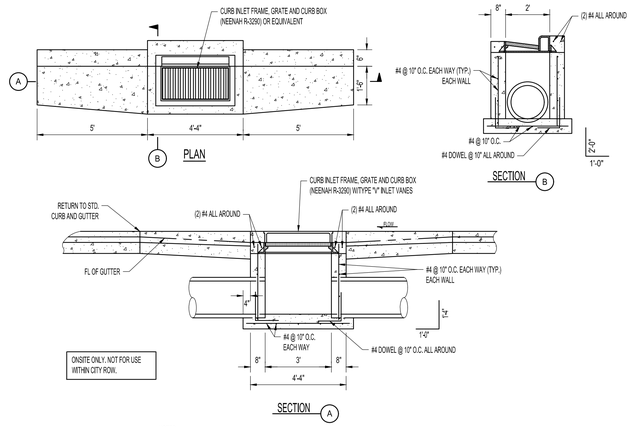

NOTES:
1. CUT PIPING SMOOTH WITH BOX WALL. PIPING JOINT WITH BOX WALL AND ALL LEDGES SHALL BE GROUTED SMOOTH WITH EPOXY GROUT.
2. REVISE BARS TO #5 AT 12" O. C. IF DEPTH IS GREATER THAN 4'-0" AND LESS THAN 6'-0", USE 3 x 3 MIN. BOX IF DEPTH IS MORE 6'-0", USE 4' x 4' MIN. BOX IF NECESSARY TO FIT ANGLED PIPING CONNECTIONS OR TO FIT LARGER PIPE. THE PIPE BELL SHALL NOT TERMINATE IN THE BOX.
3. ALL REBAR TO BE EPOXY COATED.
4. NYLOPLAST 2' x 3' INLET BOX WITH HOODED INLET (OR APPROVED EQUAL) IS ALLOWED AS SUBSTITUTION.

CURB AND GUTTER INLET
N.T.S. **E**

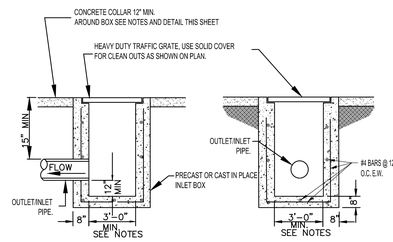

NOTES:
1. REVISE BARS TO #5 AT 12" O. C. IF DEPTH IS GREATER THAN 4'-0" AND LESS THAN 6'-0", USE 3'x3' MIN. BOX IF DEPTH IS MORE 6'-0". USE 4'x4' MIN. BOX IF NECESSARY TO FIT ANGLED PIPING CONNECTIONS OR TO FIT LARGER PIPE. THE PIPE BELL SHALL NOT TERMINATE IN THE BOX. REBAR TO BE EPOXY COATED.

2. CUT PIPING SMOOTH WITH BOX WALL. PIPING JOINT WITH BOX WALL AND ALL LEDGES SHALL GROUTED SMOOTH WITH EPOXY GROUT.

3. NO ORIFICE ON THIS SITE.

3'x3' CATCH BASIN
N.T.S. **F**

CRSA

PROJECT **24-038**

BID PACKAGE #1 2024-08-26

REVISIONS

NO.	DATE	DESCRIPTION
1	09/09/2024	ADDENDUM #1

REVIEWED FOR CODE COMPLIANCE
Andrew Peterson
09/12/2024
DIVISION OF FACILITIES CONSTRUCTION AND MANAGEMENT

DAVIS TECHNICAL COLLEGE WELDING TECHNOLOGY BUILDING

550 EAST 300 SOUTH,
KAYSVILLE, UT 84037

DAVISTECH
DAVIS TECHNICAL COLLEGE

STATE OF UTAH
Benjamin Nielsen
13775865-2202
PROFESSIONAL ENGINEER

MERIDIAN ENGINEERING, INC.
7626 WEST 11570 SOUTH, SUITE 105
SOUTH JORDAN, UTAH 84095
PHONE (801) 599-1315 FAX (801) 599-1319

Blue Stakes of UTAH 811

UTILITY DETAILS

C101.1

(801) 355-5915

Open driveway approach

1. **GENERAL**
   A. Variance from specified dimensions and slopes must be acceptable to the ENGINEER. System configuration may be changed at ENGINEER's discretion.
   B. Field Changes to Slope Requirements:
      1) Grades may have a 6 percent change in slope over a 11 feet wheel base run for both crest or sag vertical curves.
      2) Where heavy truck use and fire truck access applies, or to improve design speed, design grades should be cut in half.
      3) Specific uses or site conditions may require profile design submittal for review and acceptance.
   C. Additional requirements are specified in APWA Section 32 16 13.

2. **PRODUCTS**
   A. Base Course: Untreated base course, APWA Section 32 11 23. Do not use gravel as a base course without ENGINEER's permission.
   B. Expansion Joint Filler: 1/2-inch thick type F1 full depth, APWA Section 32 13 73..
   C. Concrete: Class 4000, APWA Section 03 30 04. If necessary, provide concrete that achieves design strength in less than 7 days. Use caution; however, as concrete crazing (spider cracks) may develop if air temperature exceeds 90 degrees F.
   D. Reinforcement: Galvanized or epoxy coated, deformed, 60 ksi yield grade steel, ASTM A615.
   E. Concrete Curing Agent: Clear membrane forming compound with fugitive dye (Type ID Class A), APWA Section 03 39 00.

3. **EXECUTION**
   A. Base Course Placement: APWA Section 32 05 10. Maximum lift thickness before compaction is 8-inches when using riding equipment or 6-inches when using hand held equipment. Compaction is 95 percent or greater relative to a modified proctor density, APWA Section 31 23 26.
   B. Reinforcement: Not required if driveway apron is constructed without a cold joint.
   C. Concrete Placement: APWA Section 03 30 10.
      1) Install expansion joints vertical, full depth, with top of filler set flush with concrete surface.
      2) Install contraction joints vertical, 1/8-inch wide or 1/4 slab thickness if the slab is same thickness as 8-inches thick. Maximum length to width ratio for non-square panels is 1.5 to 1. Maximum panel length (in feet) is 1.5 times the slab thickness (in inches).
      3) Provide 1/2-inch radius edges. Apply a broom finish. Apply a curing agent.
   D. Protection and Repair: Protect concrete from deicing chemicals during cure. Repair construction that does not drain. If necessary, fill flow-line with water to verify.

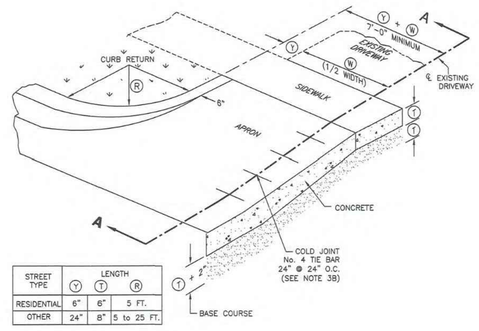

OBLIQUE

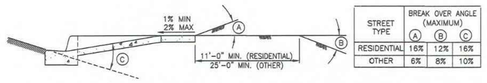

SECTION A-A - APPROACH REQUIRING SERVICE TRUCK ACCESS

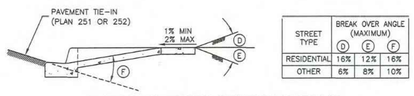

SECTION A-A - TYPICAL DRIVEWAY APPROACH

NOTE
1. DRIVEWAY TO BE 7" THICK MINIMUM.

Mid-block curb cut assembly

1. **GENERAL**
   A. Where existing elements or spaces are altered to receive an assembly; slopes and dimensions shall comply with slopes and dimensions shown on the drawing, or to the maximum extent feasible permitted by the ENGINEER. Final configuration of the assembly may be different than shown.
   B. Installation of a curb wall is ENGINEER's choice.
   C. Definitions and supplemental requirements are specified in APWA Section 32 16 14.

2. **PRODUCTS**
   A. Base Course: Untreated base course, APWA Section 32 11 23. Do not use gravel as a base course without ENGINEER's permission.
   B. Expansion Joint Filler: 1/2-inch thick type F1 full depth, APWA Section 32 13 73..
   C. Detectable Warning Surface: Paver, ribbed composite panel, or tile. Provide a color that contrasts with adjacent walking surface, either light-on-dark or dark-on-light. ENGINEER to select type and color unless indicated elsewhere.
   D. Concrete: Class 4000, APWA Section 03 30 04.
   E. Concrete Curing Agent: Clear membrane forming compound with fugitive dye (Type ID Class A), APWA Section 03 39 00.

3. **EXECUTION**
   A. Base Course Placement: APWA Section 32 05 10. Maximum lift thickness before compaction is 8-inches when using riding equipment or 6-inches when using hand held equipment. Compaction is 95 percent or greater relative to a modified proctor density, APWA Section 31 23 26.
   B. Curb Modifications:
      1) The sloped surface created to accommodate a flare area shall be perpendicular to the back of curb.
      2) No grade break shall exist between the flow-line and the foot of the curb ramp or blended transition. Length of the curb modification abutting the curb ramp or transition is 4 feet minimum.
   C. Curb Ramp: Length not required to exceed 15 feet. Grade breaks are perpendicular to the direction of ramp run and are not permitted on the ramp or turning space surface. Sides are parallel to each other and perpendicular to the ends.
   D. Concrete Placement: APWA Section 03 30 10.
      1) Maximum length to width ratio for rectangular panel joints is 1.5 to 1. Joint spacing measured in feet not to exceed twice slab thickness measured in inches or a maximum of 15 feet.
      2) Install expansion joints vertical, full depth, with top of filler set flush with concrete surface. Install contraction joints vertical, 1/8-inch wide, and 1/4 of the depth of the concrete flatwork.
      3) Provide 1/2-inch radius edges. Apply a broom finish. Apply a curing agent.
   E. Clear Space: No trip hazards in the clear space.

TURNING SPACE AT SIDEWALK LEVEL

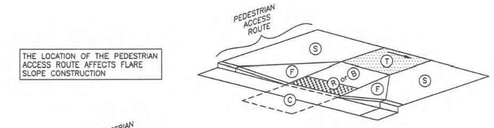

EXAMPLE 1

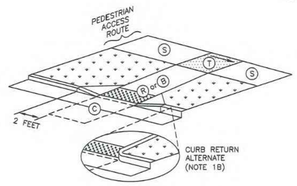

EXAMPLE 2

ELEMENT	DIMENSION
R B	4 FEET WIDE MINIMUM
C T	4 FEET SQUARE MINIMUM

WHERE TURNING SPACE IS CONSTRAINED ON 2 SIDES, PROVIDE 5 FEET IN THE DIRECTION OF THE CROSSWALK

TABLE OF DIMENSIONS

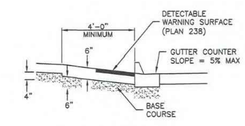

MATERIALS

		RUNNING SLOPE (%) MAXIMUM	CROSS SLOPE (%) MAXIMUM
TURNING SPACE	T	STREET GRADE	2
CURB RAMP	R	8.33	2 (c)
BLENDED TRANSITION	B	5	2 (c)
CLEAR SPACE	C	5	2 (c)
SIDEWALK	S	STREET GRADE	2
FLARE	F	10	--

(a) RUNNING SLOPE IS IN THE DIRECTION OF PEDESTRIAN TRAVEL. RUNNING SLOPE OF FLARE IS PARALLEL TO BACK OF CURB.
(b) CROSS SLOPE IS PERPENDICULAR TO DIRECTION OF PEDESTRIAN TRAVEL.

SLOPE TABLE

Mid-block curb cut assembly

1. **GENERAL**
   A. Where existing elements or spaces are altered to receive an assembly; slopes and dimensions shall comply with slopes and dimensions shown on the drawing, or to the maximum extent feasible permitted by the ENGINEER. Final configuration of the assembly may be different than shown.
   B. Installation of a curb wall is ENGINEER's choice.
   C. Definitions and supplemental requirements are specified in APWA Section 32 16 14.

2. **PRODUCTS**
   A. Base Course: Untreated base course, APWA Section 32 11 23. Do not use gravel as a base course without ENGINEER's permission.
   B. Expansion Joint Filler: 1/2-inch thick type F1 full depth, APWA Section 32 13 73..
   C. Detectable Warning Surface: Paver, ribbed composite panel, or tile. Provide a color that contrasts with adjacent walking surface, either light-on-dark or dark-on-light. ENGINEER to select type and color unless indicated elsewhere.
   D. Concrete: Class 4000, APWA Section 03 30 04.
   E. Concrete Curing Agent: Clear membrane forming compound with fugitive dye (Type ID Class A), APWA Section 03 39 00.

3. **EXECUTION**
   A. Base Course Placement: APWA Section 32 05 10. Maximum lift thickness before compaction is 8-inches when using riding equipment or 6-inches when using hand held equipment. Compaction is95 percent or greater relative to a modified proctor density, APWA Section 31 23 26.
   B. Curb Modifications:
      1) The sloped surface created to accommodate the ramp or approach areas shall be perpendicular to the back of curb.
      2) No grade break shall exist between the flow-line and the turning space. Length of the curb modification abutting the turning space is 4 feet minimum.
   C. Curb Ramp: Length not required to exceed 15 feet. Grade breaks are perpendicular to the direction of ramp run and are not permitted on the ramp or turning space surface. Sides are parallel to each other and perpendicular to the ends.
   D. Curb Wall: Set top of curb wall equal to elevation of extended lateral lines of sidewalk.
   E. Concrete Placement: APWA Section 03 30 10.
      1) Maximum length to width ratio for rectangular panel joints is 1.5 to 1. Joint spacing measured in feet not to exceed twice slab thickness measured in inches or a maximum of 15 feet.
      2) Install expansion joints vertical, full depth, with top of filler set flush with concrete surface. Install contraction joints vertical, 1/8-inch wide, and 1/4 of the depth of the concrete flatwork.
      3) Provide 1/2-inch radius edges. Apply a broom finish. Apply a curing agent.
   F. Clear Space: No trip hazards in the clear space.

TURNING SPACE AT STREET LEVEL

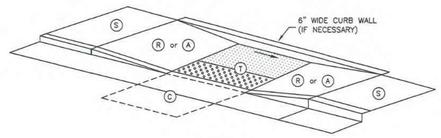

EXAMPLE 5

ELEMENT	DIMENSION
R A	4 FEET WIDE MINIMUM
C T	4 FEET SQUARE MINIMUM

WHERE TURNING SPACE IS CONSTRAINED ON 2 SIDES, PROVIDE 5 FEET IN THE DIRECTION OF THE CROSSWALK

TABLE OF DIMENSIONS

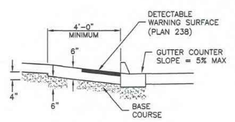

MATERIALS

		RUNNING SLOPE (%) MAXIMUM	CROSS SLOPE (%) MAXIMUM
TURNING SPACE	T	STREET GRADE	2
CURB RAMP	R	8.33	2
CLEAR SPACE	C	5	STREET GRADE
SIDEWALK	S	STREET GRADE	2
APPROACHE	A	8.33	2

(a) RUNNING SLOPE IS IN THE DIRECTION OF PEDESTRIAN TRAVEL. RUNNING SLOPE OF FLARE IS PARALLEL TO BACK OF CURB.
(b) CROSS SLOPE IS PERPENDICULAR TO DIRECTION OF PEDESTRIAN TRAVEL

SLOPE TABLE

CRSA

PROJECT **24-038**

BID PACKAGE #1 2024-08-26

REVISIONS

NO.	DATE	DESCRIPTION
1	09/09/2024	ADDENDUM #1

REVIEWED FOR CODE COMPLIANCE
Andrew Peterson
09/12/2024
CHIEF OF FACILITIES CONSTRUCTION AND MAINTENANCE

DAVIS TECHNICAL COLLEGE WELDING TECHNOLOGY BUILDING

550 EAST 300 SOUTH,
KAYSVILLE, UT 84037

DAVISTECH
DAVIS TECHNICAL COLLEGE

STATE OF UTAH
JASON D. LARSEN
13775865-2202
PROFESSIONAL ENGINEER

MERIDIAN ENGINEERING, INC.
7626 WEST 11570 SOUTH, SUITE 150
SOUTH JORDAN, UTAH 84095
PHONE (801) 569-1515 FAX (801) 569-1519

Blue Stakes of UTAH 811

APWA DETAILS

C102.1

(801) 355-5915

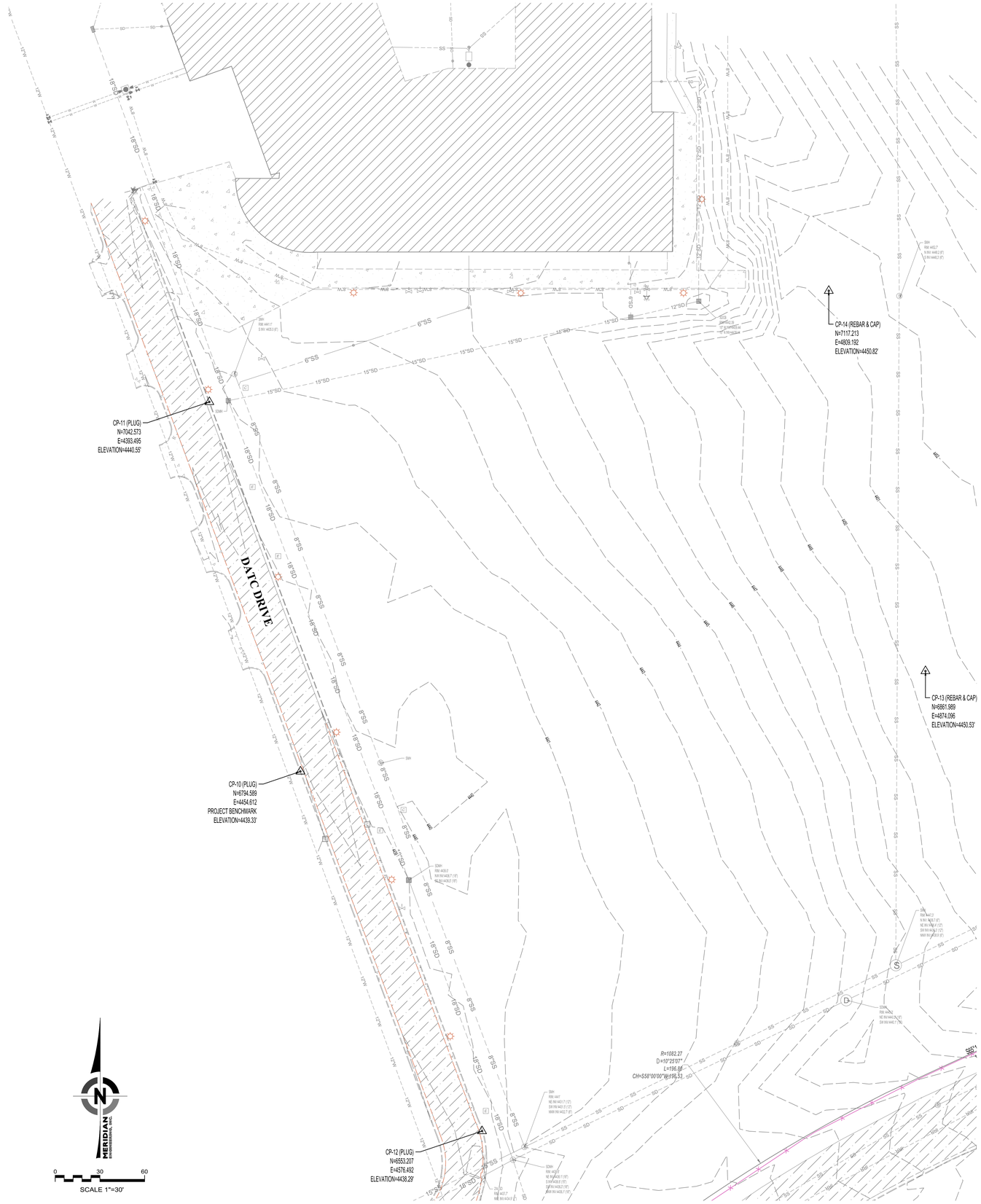

SURVEYOR'S CERTIFICATE

I, TRAVIS R. WILLIAMS, DO HEREBY CERTIFY THAT I AM A PROFESSIONAL LAND SURVEYOR, HOLDING CERTIFICATE NUMBER 13941945, AS PRESCRIBED BY THE LAWS OF THE STATE OF UTAH AND STATE THAT INFORMATION SHOWN ON THIS PLAT HAS BEEN OBTAINED THROUGH SURFACE SURVEYS OF STRUCTURES. UTILITIES AND IMPROVEMENTS VISIBLE TO THE SURVEYOR AT THE TIME OF THE SURVEY. UNDERGROUND STRUCTURES, UTILITIES AND IMPROVEMENTS HAVE NOT BEEN SURVEYED. UNDERGROUND FEATURES, INCLUDING ELEVATIONS, SIZES, TYPES, CAPACITIES AND DIMENSIONS ARE SHOWN GRAPHICALLY AS OBTAINED THROUGH MUNICIPAL OR GOVERNING ENTITY RECORDS AND MAPS. INFORMATION AS REPRESENTED HEREON DOES NOT CONSTITUTE A WARRANTY OR GUARANTEE, EXPRESSED OR IMPLIED.

PROFESSIONAL LAND SURVEYOR
PLS NO. 13941945
10/24/2024
TRAVIS R. WILLIAMS
STATE OF UTAH

TRAVIS R. WILLIAMS
PLS NO. 13941945

EXISTING TOPO NOTES:

1. TOPOGRAPHIC SURVEY INFORMATION SHOWN HEREON WAS PREPARED BY CIVIL SOLUTIONS GROUP INC. IN DECEMBER OF 2023. MERIDIAN ENGINEERING INC., IS NOT RESPONSIBLE FOR ANY TOPOGRAPHIC INFORMATION SHOWN HEREON.
2. SURVEY CONTROL POINTS SHOWN HEREON WERE ESTABLISHED BY MERIDIAN ENGINEERING, INC. IN SEPTEMBER OF 2024. ALL CONTROL POINTS SHOULD BE VERIFIED PRIOR TO CONSTRUCTION ACTIVITIES TO ENSURE THEY ARE STILL INSIDE AN ACCEPTABLE MEASUREMENT TOLERANCE.
3. CONTROL POINT ELEVATIONS SHOWN WERE DERIVED FROM THE PROJECT BENCHMARK USING DIFFERENTIAL LEVELING.
4. THE LOCATIONS OF UNDERGROUND STRUCTURES, UTILITIES OR IMPROVEMENTS AS SHOWN HEREON ARE BASED ON ABOVE GROUND APPURTENANCES VISIBLE AT THE TIME OF THE SURVEY TO THE SURVEYOR. EXACT LOCATIONS OF UNDERGROUND STRUCTURES, UTILITIES OR IMPROVEMENTS MAY VARY FROM LOCATIONS SHOWN HEREON. ADDITIONAL UNDERGROUND STRUCTURES, UTILITIES OR IMPROVEMENTS MAY EXIST.
5. ELEVATIONS, SIZES, TYPES AND CONDITIONS OF UNDERGROUND STRUCTURES, UTILITIES OR IMPROVEMENTS AS SHOWN ON THIS PLAT ARE APPROXIMATE ONLY AND SHOULD BE VERIFIED WITH THE APPROPRIATE AGENCY OR CONTROLLING PARTY BEFORE DESIGN OR CONSTRUCTION.
6. ENVIRONMENTAL CONDITIONS WERE NOT EXAMINED OR CONSIDERED AS A PART OF THIS SURVEY. NO STATEMENT IS MADE CONCERNING THE EXISTENCE OF UNDERGROUND OR OVERHEAD CONTAINERS, FACILITIES, DEPOSITS OR DISPOSALS THAT MAY AFFECT THE USE OR DEVELOPMENT OF THIS PROPERTY.
7. UNLESS OTHERWISE SHOWN, NO ATTEMPT HAS BEEN MADE AS PART OF THIS PLAT AND THE SURVEY ON WHICH IT IS BASED TO DISCLOSE THE LOCATIONS, SIZE, TYPE OR CONDITION OF ANY TREE, HEDGE, GROUND COVER, LAWN, PLANTINGS OR ANY OTHER LANDSCAPING OR SPRINKLER HEADS, PIPES OR ANY APPURTENANT PARTS THEREOF. ADDITIONAL LANDSCAPING OR IRRIGATION FACILITIES MAY EXIST.
8. CONTRACTOR MUST OBTAIN A PERMIT BEFORE BEGINNING WORK WITHIN THIRTY FEET OF AN ESTABLISHED COUNTY SURVEY MONUMENT. PER UTAH STATE CODE 17-23-14 SUBSECTIONS 2 AND 4.

LEGEND

- EXISTING BURIED POWER LINE
- EXISTING OVERHEAD POWER LINE
- EXISTING STORM DRAIN LINE
- EXISTING SEWER LINE
- EXISTING WATER LINE
- EXISTING TELEPHONE LINE
- EXISTING BURIED TELEPHONE LINE
- EXISTING CABLE LINE
- EXISTING FIBER OPTIC LINE
- EXISTING GAS LINE
- EXISTING IRRIGATION LINE
- EXISTING CHAIN LINK FENCE
- EXISTING CURB & GUTTER
- EXISTING MAJOR CONTOUR LINE
- EXISTING MINOR CONTOUR LINE
- EXISTING CONCRETE
- EXISTING BUILDING
- EXISTING ELECTRICAL BOX
- EXISTING IRRIGATION BOX
- EXISTING TELEPHONE PEDESTAL
- EXISTING TELEPHONE BOX
- EXISTING SEWER MANHOLE
- EXISTING STORM DRAIN MANHOLE
- EXISTING WATER MANHOLE
- EXISTING TELEPHONE MANHOLE
- EXISTING CLEAN OUT
- EXISTING CATCH BASIN
- EXISTING WATER METER
- EXISTING GAS METER
- EXISTING ELECTRICAL METER
- EXISTING LIGHT POLE
- EXISTING POWER POLE
- EXISTING POWER POLE & LIGHT STAND
- EXISTING GUY WIRE
- EXISTING GATE POST
- EXISTING SIGN
- EXISTING GAS VALVE
- EXISTING BOLLARD
- EXISTING ELECTRICAL TRANSFORMER
- EXISTING WATER VALVE
- EXISTING IRRIGATION VALVE
- EXISTING FIRE HYDRANT
- CONTROL MONUMENT

CRSA

PROJECT **24-038**

BID PACKAGE #1 2024-08-26

REVISIONS

NO.	DATE	DESCRIPTION
1	10/09/2024	ADDENDUM #4

DAVIS TECHNICAL COLLEGE WELDING TECHNOLOGY BUILDING

550 EAST 300 SOUTH,
KAYSVILLE, UT 84037

DAVISTECH
DAVIS TECHNICAL COLLEGE

BOUNDARY AND TOPOGRAPHIC SURVEY

1 **C200.1**

MERIDIAN ENGINEERING, INC.
1628 WEST 1970 SOUTH, SUITE 100
SOUTH JORDAN, UTAH 84095
PHONE (801) 569-1010 FAX (801) 569-1019

Blue Stakes of Utah 811

(801) 355-5915



LEGEND

	GRAVEL
	ASPHALT
	CONCRETE
	POWER POLE
	IRRIGATION VALVE
	WATER METER
	WATER VALVE
	HYDRANT
	COMMUNICATIONS BOX
	ELECTRICAL BOX
	SEWER MANHOLE/LINE
	STORM DRAIN MANHOLE/LINE
	STORMDRAIN BOX
	LIGHT POLE
	POWER LINE
	WATER LINE
	CONTOUR LINES
	SPOT ELEVATIONS
BEARING/DISTANCE	MEASURED
(BEARING/DISTANCE)	(RECORD)

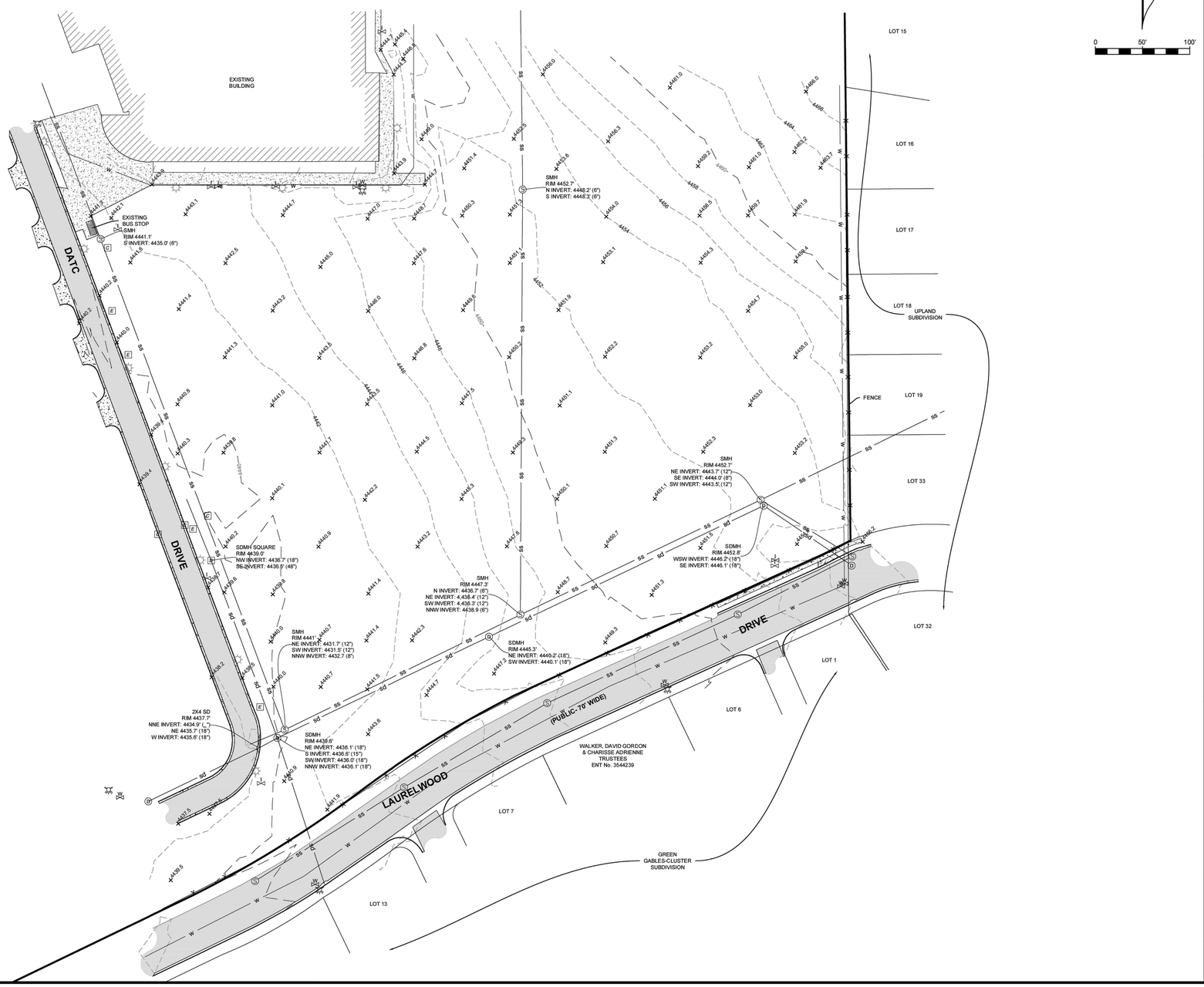

civilsolutionsgroup inc.
CACHE VALLEY | P: 435.213.3762
SALT LAKE | P: 801.216.3192
UTAH VALLEY | P: 801.874.1432
info@civilsolutionsgroup.net
www.civilsolutionsgroup.net

BOUNDARY & TOPOGRAPHICAL SURVEY

LOCATION: NORTH 1/2 OF SECTION 2, T3N, R1W,
SLB&M, KAYSVILLE, UTAH

PROPERTY OF: UTAH STATE BOARD FOR APPLIED TECHNOLOGYPREPARED FOR:
METHOD STUDIO

REVISION BLOCK		
NO.	DATE:	DESCRIPTION:

SCALE: 1" = 50'	DRAWN BY: C. SQUIRE
DATE: 12/20/23	PROJECT #: 23-140

SHEET 2 OF 2

CRSA

PROJECT **24-038**

BID PACKAGE #1 2024-08-26

REVISIONS

NO.	DATE	DESCRIPTION
1	09/09/2024	ADDENDUM #1

REVIEWED FOR CODE COMPLIANCE
W Peterson
2024
DIVISION OF FACILITIES CONSTRUCTION AND MANAGEMENT

DAVIS TECHNICAL COLLEGE WELDING TECHNOLOGY BUILDING

550 EAST 300 SOUTH,
KAYSVILLE, UT 84037

DAVISTECH
DAVIS TECHNICAL COLLEGE

MERIDIAN ENGINEERING, INC.
1628 WEST 11510 SOUTH, SUITE 102
SOUTH JORDAN, UTAH 84095
PHONE (801) 569-1315 FAX (801) 569-1319

Blue Stakes of UTAH 811

BOUNDARY AND TOPOGRAPHIC SURVEY

1 **C201.1**

(801) 355-5915



DEMOLITION LEGEND

- REMOVE TREES — X
- REMOVE UTILITY STRUCTURES, LIGHTS ETC. — XX
- SAWCUT
- REMOVE FENCING
- REMOVE WALL/CURBING/CURB AND GUTTER
- REMOVE UTILITY — XX XX XX
- ABANDON UTILITY IN PLACE
- REMOVE EXISTING BUILDING
- REMOVE EXISTING ASPHALT
- REMOVE EXISTING CONCRETE
- PROJECT LIMIT LINE
- TEMPORARY PROJECT LIMIT LINE

SITE DEMOLITION NOTES:

1. COORDINATE ALL UTILITY INFORMATION WITH OWNER. THE COORDINATES SHOWN ON THE PLANS ARE BASED ON SURVEY CONTROL AND TOPOGRAPHIC SURVEY COMPLETED BY OTHERES. REFER TO EXISTING TOPOGRAPHIC PLAN FOR SURVEY CONTROL ON SHEET C200.
2. REFER TO SITE LAYOUT PLANS ON SHEET CS230.
3. SIDEWALK REMOVAL AND REPLACEMENT TO BE AS INDICATED ON THE SITE PLAN AND WILL MATCH EXISTING SIDEWALK WIDTHS.
4. EXCAVATION ADJACENT TO TREES SHALL BE A MINIMUM OF 6' FROM THE CENTER OF THE TREE OR THE TREE DRIP LINE AS DIRECTED BY THE OWNER'S REPRESENTATIVE. IF TREE ROOTS ARE ENCOUNTERED NEAR TREES TO REMAIN, COORDINATE TREE ROOT PRUNING WITH OWNER WHENEVER TREE ROOTS MAY BE ENCOUNTERED IN EXCAVATION. DO NOT COVER TREE ROOTS DAMAGED BY EXCAVATION NEAR TREE THAT ARE TO REMAIN. WHERE NECESSARY FOR EQUIPMENT OPERATION, TREE MAY BE TRIMMED. COORDINATE ANY TRIMMING OF TREES TO REMAIN WITHIN LANDSCAPE PLANS AND OWNER. HAND EXCAVATING FOR UTILITIES MAY BE NECESSARY TO KEEP TREES INDICATED TO BE PROTECTED IN PLACE.
5. ALL WORK WITHIN CITY ROAD ROW SHALL MEET CITY STANDARDS AND SPECIFICATIONS. OBTAIN CITY PERMIT PRIOR TO ANY WORK WITHIN CITY ROAD RIGHT OF WAY. OBTAIN ALL NECESSARY EXCAVATION PERMITS AND PROVIDE NECESSARY TRAFFIC CONTROL MEASURES PER CITY REQUIREMENTS.
6. REMOVE AND SALVAGE ALL SIGNS, BENCHES, AND EXTERIOR LIGHTS WITHIN THE PROJECT LIMITS. AFTER REMOVAL COORDINATE OWNER FOR PICKUP OF SIGNAGE OR OTHER SALVAGED ITEMS.
7. DO NOT DRIVE HEAVY EQUIPMENT OR TRUCKS OVER EXCAVATED SUBGRADE. DAMAGE TO SOFT SUBGRADE AREAS CAUSED BY ROUTING HEAVY EQUIPMENT OR TRUCKS OVER SUBGRADE WILL BE REPAIRED BY THE CONTRACTOR AT NO ADDITIONAL COST TO THE OWNER. REPAIRS TO BE COMPLETED WITH UP TO 2' OF IMPORTED STRUCTURAL GRANULAR FILL TO STABILIZE SOFT AREAS.
8. PLACEMENT OF GRANULAR IMPORT MATERIALS MAY BE NECESSARY TO MAINTAIN CONSTRUCTION TRAFFIC PATHWAYS DURING WET PERIODS OF THE YEAR. CONTRACTOR IS REQUIRED TO MAINTAIN TRAFFIC PATHWAYS AT ALL TIMES DURING CONSTRUCTION AND REMOVE OR ADD TO THESE GRANULAR MATERIALS TO MEET THE GRADES NECESSARY TO OBTAIN THE GRADES SHOWN ON CS400.
9. APPROXIMATE FOUNDATION EXCAVATION LIMIT LINE MAY BE EXTENDED WITH APPROVAL FROM THE OWNER. ANY AFFECTED IMPROVEMENTS IMPACTED SHALL BE REPAIRED AT NO ADDITIONAL COST TO THE OWNER. REFER TO BUILDING PLANS FOR APPLICABLE EXCAVATION LIMIT LINE FOR THE NEW BUILDING.
10. ALL STRIPING WITHIN THE PROJECT LIMIT LINE SHALL BE BLACKED OUT AND REPLACED WITH STRIPING PER SITE LAYOUT PLAN.
11. ALL SIGNS TO REMAIN UNLESS INDICATED ON THIS SHEET OR THE SITE PLAN.

UTILITY DEMOLITION NOTES

1. REMOVE UTILITIES ONLY AFTER NEW TEMPORARY UTILITY LINES HAVE BEEN REROUTED AND CONNECTED.
2. TEMPORARY PUMPING OF SANITARY SEWER WILL BE REQUIRED AS PORTIONS OF THE EXISTING PIPING ARE REMOVED AND REPLACED. BACKUP PUMPS AND POWER WILL BE REQUIRED WHERE PUMPING IS NECESSARY TO MAINTAIN SERVICE TO THE BUILDING. TEMPORARY BYPASS PIPING OR PUMPING IS REQUIRED UNTIL THE NEW PIPING IS OPERATIONAL.
3. REFER TO THE ELECTRICAL OR MECHANICAL PLANS FOR SITE DEMOLITION OF EXISTING TRANSFORMERS, ELECTRICAL LINES, EXISTING LIGHTING, ELECTRICAL EQUIPMENT, HEATING VAULTS, HEATING LINES, GAS LINES, OR OTHER SITE DEMOLITION INSIDE OR OUTSIDE THE PROJECT LIMITS.
4. ALL EXISTING UTILITIES OR SURFACE IMPROVEMENTS SHALL BE RETAINED AND PROTECTED DURING CONSTRUCTION. UNLESS NOTED OTHERWISE, ANY DAMAGE TO THE UTILITIES OR SURFACE IMPROVEMENTS SHALL BE REPAIRED WITH NEW MATERIALS AT NO ADDITIONAL COST TO THE OWNER. ALL INTERRUPTIONS OF UTILITIES SERVICE WILL BE COORDINATED WITH THE OWNER AT LEAST ONE WEEK IN ADVANCE. NIGHTTIME INTERRUPTIONS OF A SERVICE MAY BE NECESSARY TO SUCCESSFULLY COMPLETE NEW UTILITY CONNECTIONS.
5. UTILITIES ABANDONED IN PLACE UNDER PAVEMENT OR CONCRETE IMPROVEMENTS SHALL HAVE SAND BLOWN INTO THE ABANDONED PIPING. ALL OPEN ENDS OF ABANDONED PIPING SHALL BE PLUGGED AND CAPPED. REPAIR EXISTING MANHOLES AND INLETS WHERE PIPING IS REMOVED AS PART OF THE DEMOLITION. PLUG AND GROUT (EPOXY GROUT) HOLES IN THE EXISTING STRUCTURES. CORE DRILL AND EPOXY GROUT ALL NEW PIPING INTO EXISTING CONCRETE STRUCTURES.
6. BACKFILL ALL EXCAVATIONS FOR UTILITY PIPING OR STRUCTURE REMOVAL (MANHOLES, INLETS, ETC.) WITH STRUCTURAL FILL TO THE ROUGH GRADE ELEVATION SHOWN ON GRADING PLANS.
7. PROVIDE TEMPORARY STORM DRAINAGE PUMPING OR OTHER APPROVED STORM DRAIN DISPOSAL METHOD TO MAINTAIN DRAINAGE TO THE SITE DURING CONSTRUCTION.
8. MAINTAIN UTILITY SERVICE TO THE EXISTING BUILDING AT ALL TIMES UNLESS OTHERWISE COORDINATED.
9. ALL WORK WITHIN STREET ROW SHALL BE PER APWA STANDARD PLANS AND SPECIFICATIONS (2017 EDITION) AND CITY STANDARDS. OBTAIN CITY PERMIT PRIOR TO ANY WORK WITHIN CITY RIGHT OF WAY.
10. DO NOT DRIVE HEAVY EQUIPMENT OR TRUCKS OVER EXCAVATED SUBGRADE. SUBGRADE SOFT AREAS CAUSED BY ROUTING HEAVY EQUIPMENT OR TRUCKS OVER SUBGRADE WILL BE REPAIRED BY THE CONTRACTOR AT NO ADDITIONAL COST TO THE OWNER. REPAIRS TO BE COMPLETED AS OUTLINED IN SPEC SECTION WITH UP TO 2' OF IMPORTED STRUCTURAL GRANULAR FILL TO STABILIZE SOFT AREAS CAUSED BY ROUTING HEAVY EQUIPMENT OVER EXCAVATED SUBGRADE.
11. NEW UTILITIES SHALL BE INSTALLED AS REQUIRED TO MAINTAIN SERVICE TO EXISTING BUILDINGS. PRIOR TO REMOVAL OF EXISTING UTILITIES COORDINATE SERVICE INTERRUPTION AND REMOVAL OF UTILITIES WITH OWNER.
12. POTHOLE AND FIELD VERIFY LOCATION OF ALL EXISTING UTILITIES PRIOR TO CONSTRUCTION OF ANY NEW UTILITY OR CONNECTION TO EXISTING UTILITIES.
13. PROVIDE TEMPORARY WATER CONNECTION FOR MAINTAINING IRRIGATION OF LANDSCAPE THAT IS TO REMAIN. REFER TO LANDSCAPE PLANS.
14. RAISE/LOWER EXISTING VALVES, M.H., ELECTRICAL AND MECHANICAL VAULT HATCHES, AND UTILITY STRUCTURES WITHIN THE WORK AREA LIMITS TO NEW GRADES SHOWN ON GRADING PLAN.



MERIDIAN ENGINEERING, INC.
1628 WEST 11510 SOUTH, SUITE 100
SOUTH JORDAN, UTAH 84095
PHONE (801) 569-1515 FAX (801) 569-1519

Blue Stakes of Utah 811 — Know what's below. Call before you dig.

CRSA

PROJECT **24-038**

BID PACKAGE #1 2024-08-26

REVISIONS

NO.	DATE	DESCRIPTION
1	09/09/2024	ADDENDUM #1

REVIEWED FOR CODE COMPLIANCE
Jayson W Peterson
09/12/2024
DIVISION OF FACILITIES CONSTRUCTION AND MANAGEMENT

DAVIS TECHNICAL COLLEGE WELDING TECHNOLOGY BUILDING

550 EAST 300 SOUTH,
KAYSVILLE, UT 84037

DAVISTECH
DAVIS TECHNICAL COLLEGE

STATE OF UTAH — Jayson Dallas — 13775865-2202 — PROFESSIONAL ENGINEER

DEMOLITION PLAN

CS210.1

(801) 355-5915

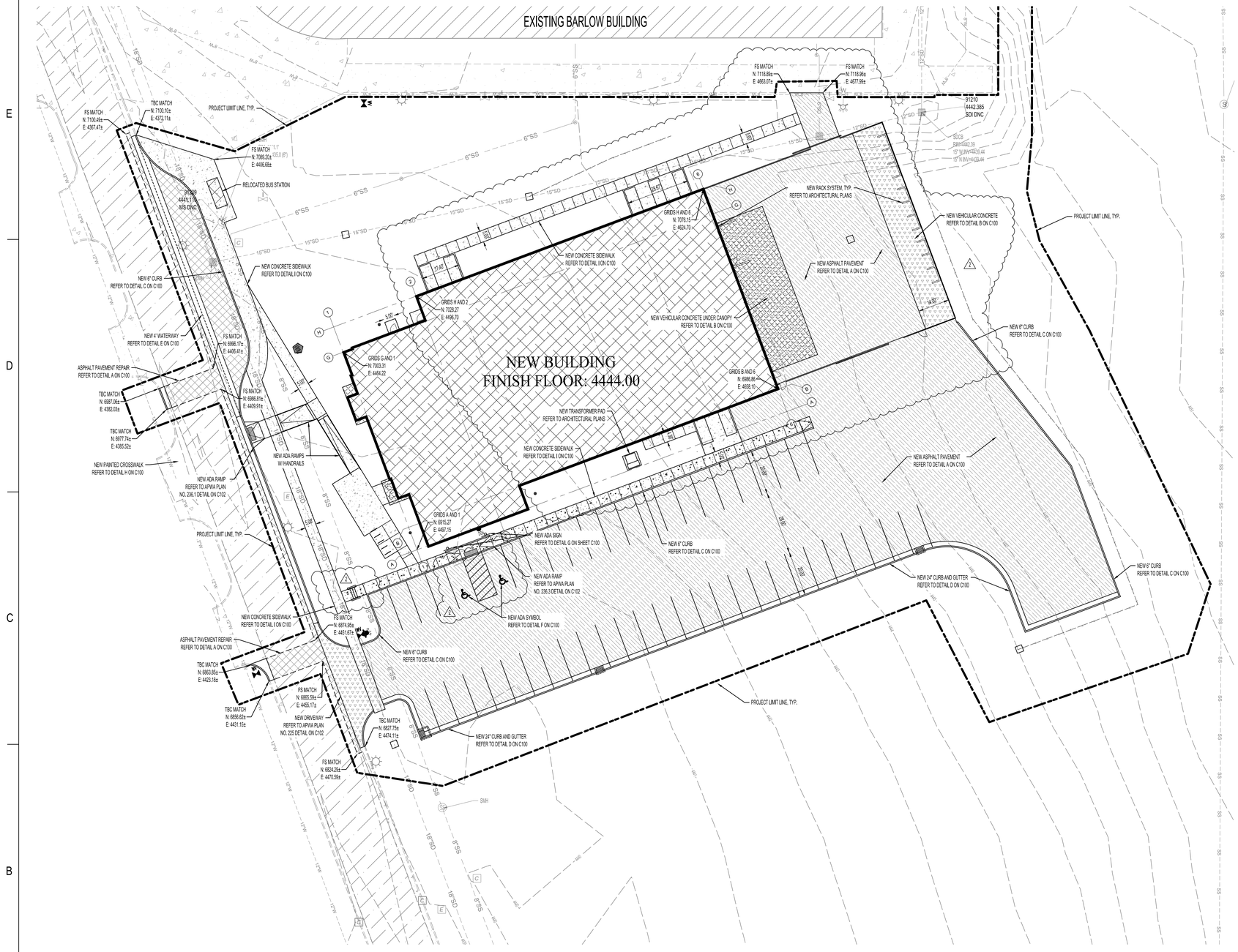

GENERAL SITE LAYOUT NOTES:

1. REFER TO ARCHITECTURAL SITE PLAN FOR DETAIL OF DUMPSTER ENCLOSURE.
2. REFER TO ELECTRICAL PLANS FOR TRANSFORMER LOCATIONS AND LIGHTING.
3. REFER TO LANDSCAPE PLANS FOR LAYOUT OF PLANTINGS.
4. VERIFY THE GRID DISTANCES SHOWN FOR BUILDING LOCATIONS WITH ARCH PLANS.
5. ALL PAVEMENT REPAIR TO MEET REQUIREMENT STANDARD DETAILS ON C100.
6. TRANSITION CURB FROM STANDARD CURB HEIGHT TO CURB TERMINATION OVER 6' MINIMUM AT ALL LOCATIONS.
7. REPAIR/CONSTRUCT DRIVE APPROACHES PER CITY STANDARDS.
8. CURVE AND LINE DATA IS BASED ON THE TOP BACK OF CURB AND FRONT OF SIDEWALK.

HATCH LEGEND

ASPHALT PAVEMENT REFER TO DETAIL A SHEET C100	NEW BUILDING
ASPHALT PAVEMENT REPAIR REFER TO DETAIL A SHEET C100	BUILDING OVERHANG OR CANOPY
VEHICULAR CONCRETE REFER TO DETAIL B SHEET C100	NEW SURFACE UTILITIES
CONCRETE SIDEWALK REFER TO DETAIL I SHEET C100	

PARKING STALL COUNT	
TOTAL STALLS:	49
STALLS:	47
HC STALLS:	2

SCALE 1"=20'

MERIDIAN ENGINEERING, INC.

CRSA

PROJECT **24-038**

BID PACKAGE #1 2024-08-26

REVISIONS

NO.	DATE	DESCRIPTION
1	09/09/2024	ADDENDUM #1
2	10/09/2024	ADDENDUM #4

DAVIS TECHNICAL COLLEGE WELDING TECHNOLOGY BUILDING

550 EAST 300 SOUTH,
KAYSVILLE, UT 84037

DAVISTECH
DAVIS TECHNICAL COLLEGE

STATE OF UTAH
13775865-2202
PROFESSIONAL ENGINEER

SITE PLAN

CS230.1

(801) 355-5915

MERIDIAN ENGINEERING, INC.
1628 WEST 11510 SOUTH, SUITE 102
SOUTH JORDAN, UTAH 84095
PHONE: (801) 569-1315 FAX: (801) 569-1319

Blue Stakes of UTAH 811

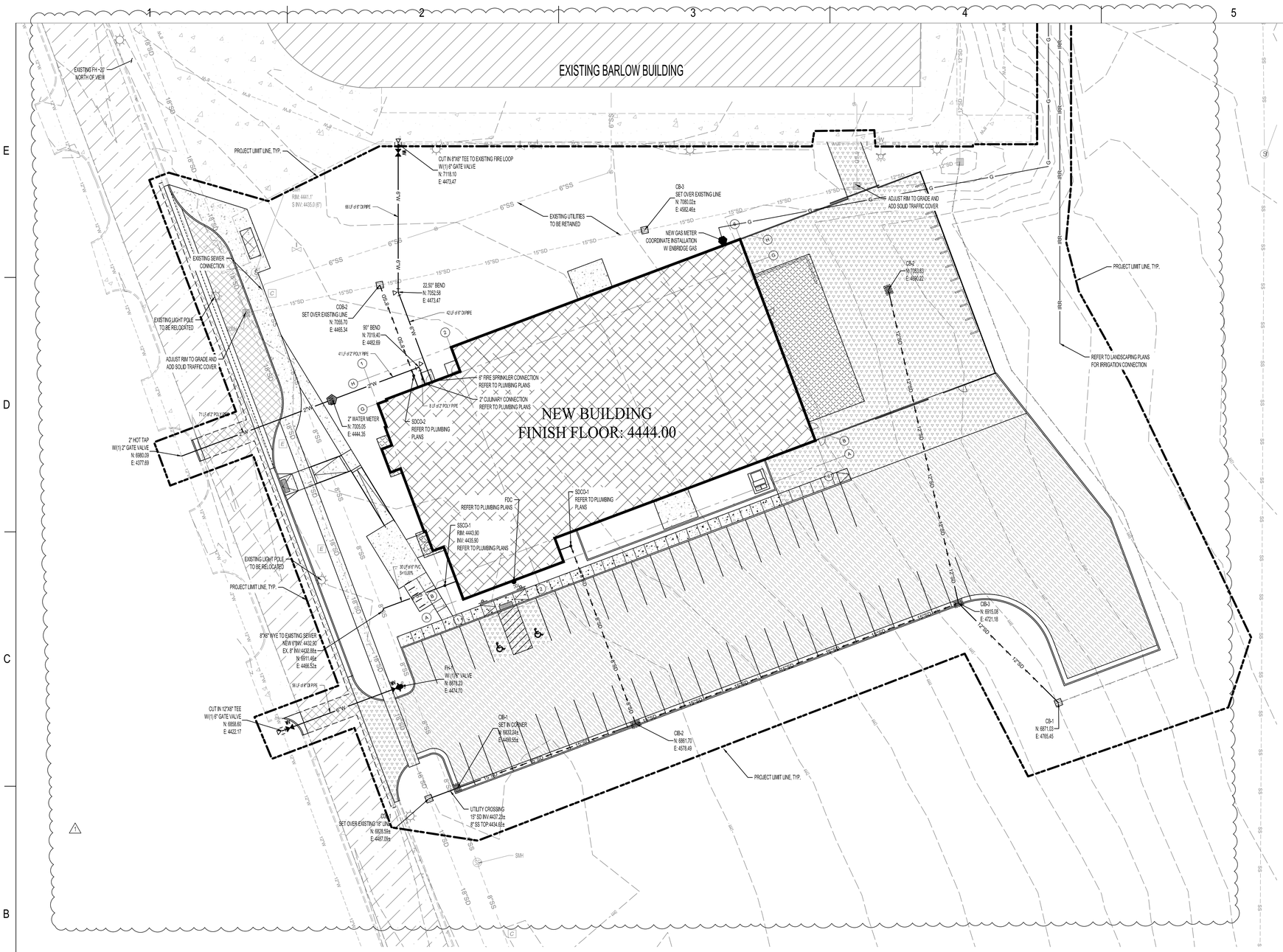

STRUCTURE LABEL	DETAIL #
SDCO & SSCO - STORM AND SEWER CLEANOUT	DETAIL C SHEET C101
FH - FIRE HYDRANT	DETAIL D SHEET C101
CIB - CURB AND GUTTER INLET	DETAIL E SHEET C101
CB - 3'x3' CATCH BASIN	DETAIL F SHEET C101

GENERAL UTILITY NOTES:

1. PLUMBING CONTRACTOR WILL TERMINATE THEIR ROOF DRAIN LINES WITH A CLEAN OUT APPROXIMATELY 5' FROM THE BUILDING. COORDINATE WITH PLUMBING CONTRACTOR ON SCHEDULE AND PLACEMENT OF ROOF DRAIN LINES NEAR THE BUILDING.
2. ALIGN ALL INTERIOR AND EXTERIOR UTILITIES. SITE UTILITY CONTRACTOR TO COORDINATE PLACEMENT HORIZONTALLY AND VERTICALLY WITH BUILDING PLUMBING CONTRACTOR. SITE "INTERFACE LINE" BETWEEN THE BUILDING PLUMBING CONTRACTOR AND THE SITE UTILITY CONTRACTOR WILL BE AT 5' FROM THE BUILDING AND (EXCEPT FOR THE FIRE SPRINKLER LINE AND WATER LINES) A CLEAN OUT WILL BE INSTALLED BY THE PLUMBING CONTRACTOR APPROXIMATELY 5' FROM THE BUILDING FOR STORM DRAIN AND SEWER LINES. CONNECTION TO BUILDING PIPING AND ALL PIPING BEYOND THIS INTERFACE SHALL BE THE SITE UTILITY CONTRACTOR'S RESPONSIBILITY. PROVIDE REDUCERS, ADAPTERS, OR OTHER FITTINGS AS REQUIRED AT THE INTERFACE TO CONNECT TO BLDG. PIPE. COLLECT ROOF DRAIN LINES AS SHOWN AND ROUTE TO NEW CATCH BASINS OR CLEAN OUTS ON SITE. PREFERRED SLOPES, APPROXIMATE DISTANCES, AND INVERTS OF GRAVITY PIPING ARE SHOWN ON THE PLAN MAY REQUIRE ADJUSTMENT TO CONNECT TO BUILDING ROOF OR SEWER DRAIN LINES. MAINTAIN 2% SLOPE FOR 4" DIAMETER OR SMALLER PIPES, 1% FOR 6" AND 0.4% FOR 8" DIAMETER PIPES.
3. SITE CONTRACTOR SHALL COORDINATE WITH KAYSVILLE CITY INSPECTOR WHEN COMPLETING CONNECTIONS TO LINES ALONG DAVIS TECH DRIVE OR ON SITE WHERE REQUIRED. ALL WATER AND SEWER SYSTEM DETAILS AS WELL AS INSPECTIONS FOR THE ENTIRE SITE SHALL BE IN ACCORDANCE WITH CENTRAL DAVIS SEWER DISTRICT AND KAYSVILLE CITY STANDARD DETAILS AND SPECIFICATIONS. SEE GENERAL NOTES ON SHEET C-100. WHERE THRUST BLOCKING CANNOT BE COMPLETED DUE TO OTHER ADJACENT UTILITIES OR OTHER SITE CONSTRAINTS, RESTRAINED JOINTS WILL BE REQUIRED PER CITY STANDARD SPEC'S. THRUST BLOCK ALL WATERLINE FITTINGS PER CITY STANDARDS TYP.
4. NO CONNECTION SHALL BE ALLOWED TO THE 8" FIRE LOOP EXCEPT FOR FIRE HYDRANTS AND THE FIRE SPRINKLER LINE. REFER TO LANDSCAPING PLANS FOR DOUBLE CHECK AND STOP & WASTE LOCATION AND DETAILS FOR IRR. SYSTEM.
5. COORDINATES FOR FIRE HYDRANTS, 3'x3' CATCH BASINS, OR CLEAN OUTS ARE AT THE CENTER OF THE UTILITY SURFACE FEATURE. COORDINATES FOR WATER LINE ANGLE POINTS ARE AT THE CENTER OF THE PIPELINE. COORDINATES FOR CURB INLETS ARE AT THE FACE OF THE CURB AT THE CENTER OF THE INLET. ALL STORM DRAIN BOXES ARE 3'x3' EXCEPT THOSE INLETS PLACED IN CURB AND GUTTER.
6. ALL VALVES, AREA CATCH BASINS (NOT IN C&G), CLEAN OUTS, OR MANHOLES SHALL HAVE CONCRETE GRADE ADJUSTMENT COLLARS PLACED AROUND THE STRUCTURE.
7. STORM DRAIN CLEAN OUTS TO BE SIMILAR TO DETAIL SHOWN ON PLUMBING PLANS.
8. ROOF DRAIN CONNECTIONS AT CATCH BASINS OR CLEAN OUT BOXES TO BE CORE DRILLED AND EPOXY GROUTED INTO PRECAST BOXES DUE TO FIELD ADJUSTMENTS WHICH MAY BE NECESSARY TO CONNECT TO BUILDING PIPING.
9. THE FIRE SPRINKLER LINE AND DOMESTIC WATER LINES SHALL BE ROUTED INTO THE FIRE SPRINKLER ROOM INSIDE THE BUILDING AND TERMINATE 12" ABOVE FINISH FLOOR WITH A FLANGE FITTING, CAP WITH BLIND FLANGE FOR LINE TESTING. REFER TO PLUMBING PLANS FOR RISER LOCATION IN THE BUILDING. THE FIRE SERVICE LINE AND FIRST FIVE FEET OF THE DOMESTIC WATER LINE SHALL BE CEMENT LINED DUCTILE IRON PIPE (PER AWWA C151 350psi AND AWWA C104) WRAPPED IN POLYETHYLENE (PER AWWA C105) FROM THE BUILDING CONNECTION TO THE TEE AT THE FIRE CONNECTION PER CITY STANDARD SPECIFICATIONS AND DETAILS.
10. ALL PAVEMENT REPAIR IN DAVIS TECH DRIVE TO BE IN ACCORDANCE WITH APWA STANDARDS. REPAIRS TO MATCH EXISTING PAVEMENT THICKNESS. USE 8" ASPHALT OVER 12" BASE COURSE IF EXISTING PAVEMENT IS LESS THAN THIS THICKNESS. (TYP.)
11. ALL CONSTRUCTION, PIPING MATERIALS AND INSTALLATION TO BE PER CITY STANDARDS FOR CULINARY WATER, SANITARY SEWER LINES AND STORM DRAIN LINES.

    NEW WATER LINES - KAYSVILLE CITY STD'S. TO METER CONNECTION: DIP CLASS 51, FIRE SPRINKLER & 4" CULINARY WATER LINES TO BE D.I. PER NOTE 9 ABOVE AND PER CITY STANDARDS.
    SEWER LINES AND MANHOLES - CENTRAL DAVIS SEWER DISTRICT STD'S.; PVC PIPING (SDR 35), PRECAST MANHOLES.
    STORM DRAIN - KAYSVILLE CITY STD'S.; RCP (CLASS III), ALONG DAVIS TECH DRIVE, 12 TO 15" PIPING HIGH PERFORMANCE HDPE FOR SITE AREA.
    ROOF DRAIN PIPING - PROJECT PLUMBING SPECIFICATIONS; CAST IRON SOIL PIPE 4" TO 8" ROOF DRAIN PIPING WRAPPED IN POLYETHYLENE SLEEVES (PER AWWA C105).
12. BACKFLOW PROTECTION SHALL BE IN ACCORDANCE WITH ALL UTAH DIVISION OF DRINKING REGULATIONS AND STANDARDS. BACKFLOW DEVICES AND THE STOP AND WASTE VALVE ARE SHOWN ON THE LANDSCAPE DRAWINGS.
13. INSPECTION AND APPROVAL FOR ANY SEWER/WATER LINE CROSSINGS SHALL BE REVIEWED AND APPROVED BY CITY PRIOR TO CONSTRUCTION OF THE CROSSING. CITY SHALL ALSO INSPECT THE CROSSING PRIOR TO BACKFILL.
14. ALL WATERLINES SHALL MAINTAIN A MINIMUM OF FOUR FEET OF COVER AT ALL TIMES. THE ANTICIPATED FROST DEPTH IS 30 INCHES.
15. UNDERGROUND FIRE SERVICE MAINS TO BE FLUSHED PER CITY AND NFPA STANDARDS 13 AND 24.
16. CONTRACTOR TO PROVIDE ELECTRICAL & TELEPHONE LINE TRENCHING AND BACKFILL. COORDINATE LOCATIONS WITH POWER AND TELEPHONE COMPANIES.
17. WATER VALVES, SEWER MANHOLES, STORM DRAIN INLETS OR CLEANOUTS BOXES, AND OTHER SURFACE UTILITY APPARATUSES SHALL BE RAISED TO ACCURATE FINISH SURFACE BY A CONCRETE GRADE COLLAR. THE CONCRETE COLLAR WILL EXTEND 12" MINIMUM AROUND THE UTILITY APPARATUSES WITH A 10" MINIMUM THICKNESS. PLACE 2-#4 HOOPS IN CONCRETE COLLAR.



CRSA

PROJECT **24-038**

BID PACKAGE #1 2024-08-26

REVISIONS

NO.	DATE	DESCRIPTION
1	09/09/2024	ADDENDUM #1

REVIEWED FOR CODE COMPLIANCE
Reviewed By: Jason W Peterson
Date: 10/2/2024
DAVIS COUNTY FACILITIES CONSTRUCTION AND MAINTENANCE DEPARTMENT

DAVIS TECHNICAL COLLEGE WELDING TECHNOLOGY BUILDING

550 EAST 300 SOUTH,
KAYSVILLE, UT 84037

DAVISTECH
DAVIS TECHNICAL COLLEGE

STATE OF UTAH
JASON W. PETERSON
13775865-2202
PROFESSIONAL ENGINEER

UTILITY PLAN

△1 **CU300.1**

(801) 355-5915

MERIDIAN ENGINEERING, INC.
1628 WEST 1970 SOUTH, SUITE 100
SOUTH JORDAN, UTAH 84095
PHONE (801) 566-5319 FAX (801) 566-5319

Blue Stakes of UTAH 811
Utah's Underground Utility Protection Center

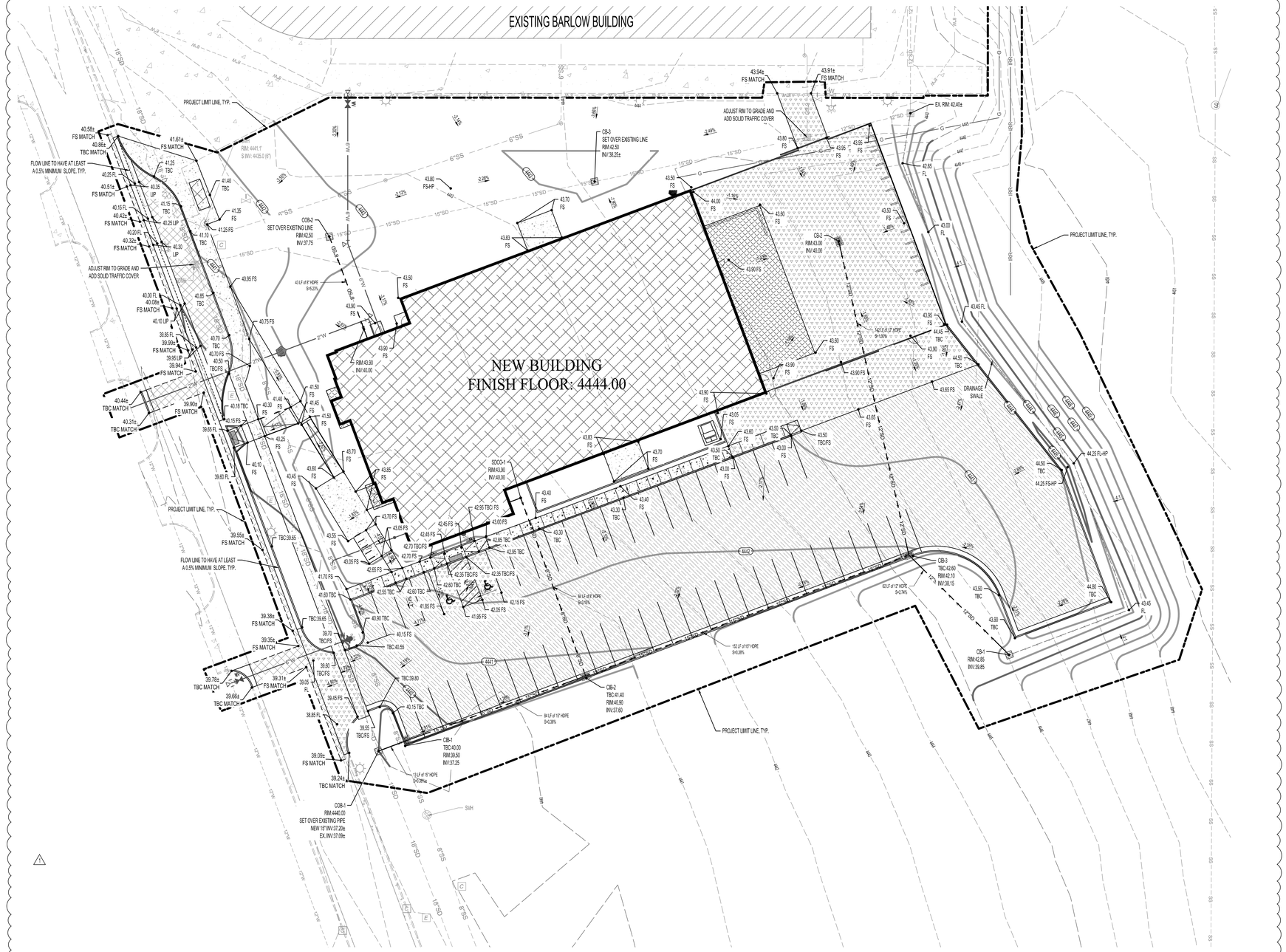

GENERAL GRADING NOTES:

1. HANDICAP PARKING AREA SHALL NOT EXCEED 2% IN ANY DIRECTION. THE PERPENDICULAR CROSS SLOPE TO PARKING STALL IN OTHER AREAS OF THE PARKING LOT SHALL NOT EXCEED 5% IN SLOPE AND SLOPE SHALL NOT EXCEED 8% IN ANY DIRECTION FOR PARKING AREAS.
2. ALL WALKWAYS SHALL NOT EXCEED 5%. SLOPE 2% MAX. FROM BUILDING OR STAIR RISERS FOR 5' MIN. REFER TO PLAN AT ALL DOORWAYS TO THE BUILDING. ALSO SLOPE 2% MAX FOR 5' AT THE END OF THE 1:12 SLOPE OF ALL H.C. RAMPS. ALL STEPS AND RAMPS ARE DETAILED ON THE ARCHITECTURAL SITE PLANS.
3. SITE CLEARING, SUBGRADE PREPARATION, EXCAVATION, AND BACKFILL WILL BE IN ACCORDANCE WITH THE REQUIREMENTS OUTLINED IN THE GEOTECHNICAL REPORT. SITE PAVEMENT THICKNESS WILL ALSO IN ACCORDANCE WITH THE GEOTECHNICAL REPORT, USE MINIMUM PAVEMENT THICKNESS OUTLINE IN NOTES 4 AND 5 IF GEOTECHNICAL REPORT HAS LESS STRINGENT REQUIREMENTS.
4. CONCRETE DRIVEWAY TO BE CONSTRUCTED PER APWA STANDARD PLAN 225. ALL OTHER CONCRETE PAVEMENT FOR VEHICLES SHALL BE A MINIMUM OF 6" OF CONCRETE (4500 psi) OVER 8" OF BASE COURSE.
5. ALL ASPHALT PAVING TO BE 4" OF ASPHALT (1 1/2" OF 1/2" MIX OVER 2 1/2" OF 3/4" MIX) OVER 8" OF BASE COURSE.
6. ALL CONCRETE AND ASPHALT PAVEMENT TO MEET REQUIREMENTS OF THE APWA SPECIFICATIONS. BASE COURSE TO MEET UDOT SPECIFICATIONS (1 1/2" GRADATION).

CRSA

PROJECT **24-038**

BID PACKAGE #1 2024-08-26

REVISIONS

NO.	DATE	DESCRIPTION
1	09/09/2024	ADDENDUM #1

REVIEWED FOR CODE COMPLIANCE
Reviewed by Matthew Peterson
Date: 10/2/2024
DEPARTMENT OF FACILITIES CONSTRUCTION AND MANAGEMENT

DAVIS TECHNICAL COLLEGE WELDING TECHNOLOGY BUILDING

550 EAST 300 SOUTH,
KAYSVILLE, UT 84037

DAVISTECH
DAVIS TECHNICAL COLLEGE

MERIDIAN ENGINEERING, INC.

STATE OF UTAH
13775865-2202
PROFESSIONAL ENGINEER

GRADING PLAN

⚠ **CG400.1**

MERIDIAN ENGINEERING, INC.
2624 WEST 11010 SOUTH, SUITE 100
SOUTH JORDAN, UTAH 84095
PHONE (801) 569-1315 FAX (801) 5691319

(801) 355-5915

Blue Stakes of Utah 811

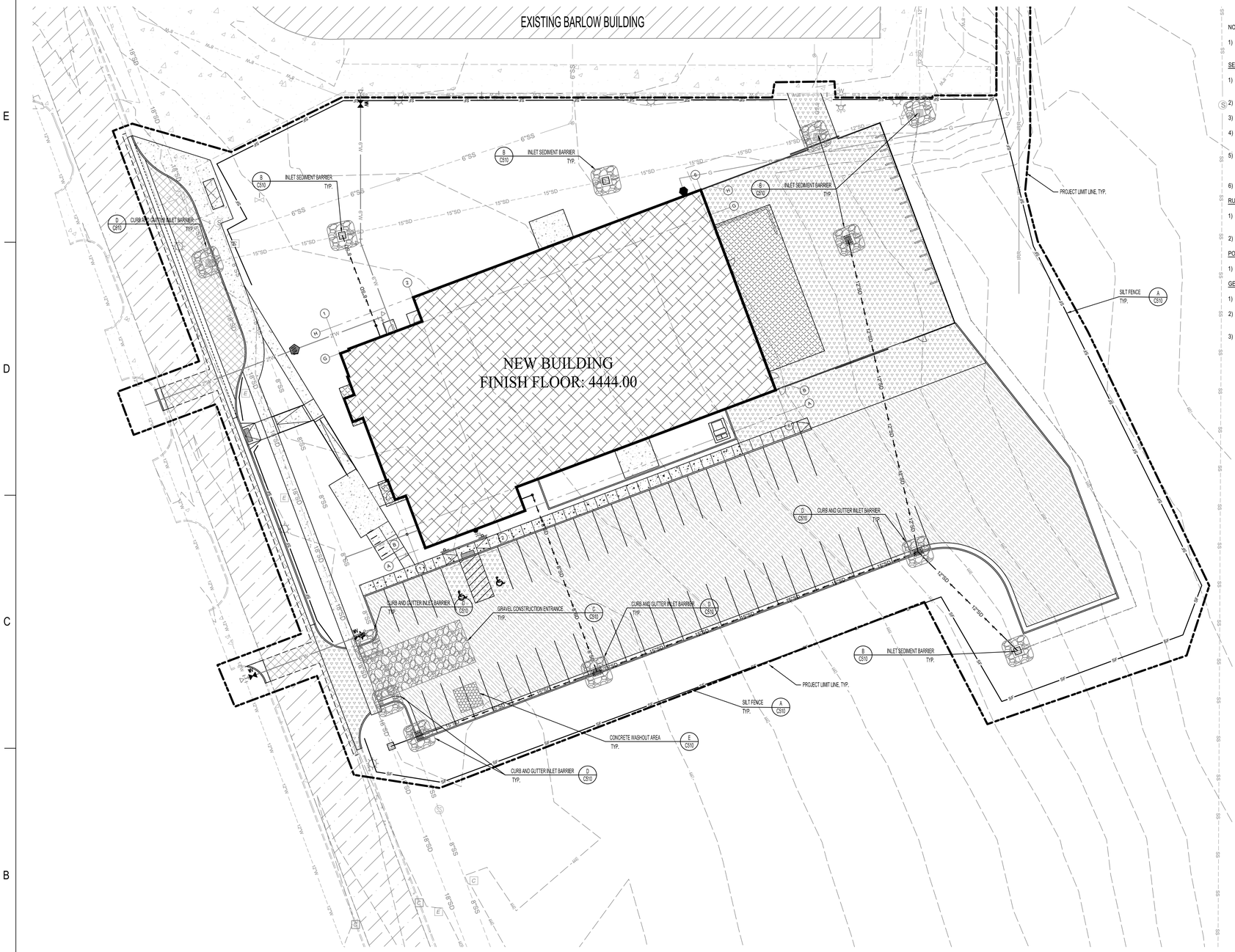

NOTES:

1) THERE ARE ABOUT 2.35 ACRES WITHIN THE PROJECT BOUNDARY THAT WILL BE DISTURBED WITH NEW CONSTRUCTION OR CONTRACTOR STORAGE ACTIVITIES.

SEQUENCE OF CONSTRUCTION ACTIVITIES:

1) FIELD MARK LIMIT OF DISTURBANCE FOR APPROVAL BY KAYSVILLE CITY AND OBTAIN A STORM WATER MANAGEMENT PERMIT AS NEEDED BY KAYSVILLE CITY.

2) INSTALL SILT FENCE AND/OR ENVIRONMENTAL FENCE AROUND PERIMETER OF PROJECT AS INDICATED ON THIS PLAN SHEET.

3) INSTALL SEDIMENT CONTROL MEASURES INDICATED IN ALL EXISTING STORM DRAIN INLETS ADJACENT TO THE CONSTRUCTION SITE.

4) CONTRACTOR WILL BEGIN DEMOLITION, GRADING, EXCAVATION, AND CONSTRUCTING UTILITY SITE IMPROVEMENTS. AS NEW DRAINAGE ELEMENTS ARE COMPLETED, CONSTRUCT SEDIMENT PROTECTION AT ALL NEW INLETS.

5) AREAS DISTURBED BY CONSTRUCTION ACTIVITIES WILL BE STABILIZED WITH SOD IN LANDSCAPED AREAS AND PAVEMENT IN PARKING AND DRIVEWAY AREAS. SITE STABILIZATION OF AREAS DISTURBED BY CONSTRUCTION ACTIVATES TO BE COMPLETED WITHIN 21 DAYS OF FINISHING AN AREA TO THE FINAL LINES AND GRADES INDICATED ON THE GRADING PLAN.

6) UPON LANDSCAPE ESTABLISHMENT, REMOVE TEMPORARY MEASURE & CLEAN STORM DRAIN SYSTEM PRIOR TO RELEASE OF SYSTEM TO THE OWNER.

RUNOFF COEFFICIENTS AND DISCHARGE:

1) THE EXISTING RUNOFF COEFFICIENT FOR THE PROJECT AREA IS ESTIMATED TO BE 0.2. THE NEW RUNOFF COEFFICIENT WILL BE APPROXIMATELY 0.62 FOR THE NEW IMPROVEMENTS.

2) RUNOFF WILL BE COLLECTED ON SITE AND RETAINED IN AN UNDERGROUND DETENTION POND.

POST CONSTRUCTION STORM WATER MANAGEMENT PRACTICES:

1) THE OWNER WILL SUBMIT POST CONSTRUCTION BEST MANAGEMENT PRACTICES TO KAYSVILLE CITY.

GENERAL STORM WATER POLLUTION CONTROL NOTES:

1) SEE C510 FOR STORM WATER POLLUTION CONTROL NOTES AND GENERAL PRACTICES.

2) ALL CONSTRUCTION PERIOD BEST MANAGEMENT PRACTICES ARE TO BE INSPECTED AND MAINTAINED AT LEAST WEEKLY, ALSO BEFORE AND AFTER EACH STORM EVENT.

3) CONTRACTOR SHALL BE REQUIRED TO KEEP RECORD OF ALL INSPECTIONS AND MAINTENANCE ON SITE WITH THE STORM WATER POLLUTION PREVENTION PLAN.



CRSA

PROJECT **24-038**

BID PACKAGE #1 2024-08-26

REVISIONS

NO.	DATE	DESCRIPTION
1	09/09/2024	ADDENDUM #1

REVIEWED FOR CODE COMPLIANCE
W Peterson
09/09/2024
DIVISION OF FACILITIES CONSTRUCTION AND MANAGEMENT

DAVIS TECHNICAL COLLEGE WELDING TECHNOLOGY BUILDING

550 EAST 300 SOUTH,
KAYSVILLE, UT 84037

DAVISTECH
DAVIS TECHNICAL COLLEGE

STATE OF UTAH
13775865-2202
PROFESSIONAL ENGINEER

MERIDIAN ENGINEERING, INC.
1628 WEST 1510 SOUTH, SUITE 102
SOUTH JORDAN, UTAH 84095
PHONE (801) 569-1315 FAX (801) 569-1319

Blue Stakes of UTAH 811
Blue Stakes.org

EROSION CONTROL PLAN

C500.1

(801) 355-5915

SILT FENCES, INSTALLATION OF SILT FENCES NOTE:

1. DIG OR TRENCH A FOUR INCH WIDE BY SIX INCH DEEP TRENCH. THE LENGTH OF THE SILT FENCE
2. ROLL OUT SILT FENCE MATERIAL ALONG THE FRONT OF THE TRENCH SUCH THAT THE STAKES WILL BE ON THE DOWNSTREAM SIDE AND THE BOTTOM FLAP LAY IN THE TRENCH.
3. STARTING AT ONE END, DRIVE THE FIRST STAKE AT LEAST 10 INCHES INTO THE GROUND. NOTE THAT THE STAKE MUST BE DRIVEN FAR ENOUGH INTO THE GROUND SO THAT 8 - 12 INCHES OF MATERIAL REMAINS IN THE GROUND.
4. AT THE NEXT STAKE, PULL THE MATERIAL TAUT BEFORE DRIVING THE SECOND STAKE INTO THE GROUND. NOTE THAT THE STAKE MUST BE DRIVEN FAR ENOUGH INTO THE GROUND SO THAT 8 - 12 INCHES OF MATERIAL REMAINS IN THE GROUND.
5. REPEAT STEP 4 UNTIL THE STAKES ARE DRIVEN INTO THE GROUND.
6. WHEN ATTACHING TWO LENGTHS OF FENCE TOGETHER, DO THE FOLLOWING:
   - 6.1 PLACE THE END POST OF THE SECOND FENCE INSIDE THE END POST OF THE FIRST FENCE.
   - 6.2 ROTATE BOTH POSTS AT LEAST 180 DEGREES IN A CLOCKWISE DIRECTION. TO CREATE A TIGHT SEAL WITH THE FENCE MATERIAL.
   - 6.3 DRIVE BOTH POST INTO THE GROUND SO THAT 8 - 12 INCHES OF MATERIAL REMAINS IN THE GROUND.

EROSION CONTROL GENERAL NOTES:

1. AT ALL TIMES DURING CONSTRUCTION, THE CONTRACTOR SHALL BE RESPONSIBLE FOR PREVENTING AND CONTROLLING EROSION DUE TO WIND AND RUNOFF. THE CONTRACTOR SHALL ALSO BE RESPONSIBLE FOR MAINTAINING THE EROSION CONTROL FACILITIES SHOWN.
2. ADDITIONAL EROSION CONTROL MEASURES MAY BE REQUIRED DUE TO UNFORESEEN PROBLEMS OR IF THE PLAN DOES NOT FUNCTION AS INTENDED. A REPRESENTATIVE OF THE CITY PUBLIC WORKS DEPARTMENT MAY REQUIRE ADDITIONAL CONTROL DEVICES UPON INSPECTION OF PROPOSED FACILITIES.
3. ALL BEST MANAGEMENT PRACTICES AND EROSION CONTROL MEASURES ARE TO CONFORM TO THE CITY LAND DISTURBANCE DESIGN AND CONSTRUCTION STANDARDS.
4. THE CONTRACTOR IS RESPONSIBLE FOR KEEPING THE STREETS CLEAN AND FREE FROM DEBRIS DEPOSITED BY TRAFFIC FROM THE SITE.
5. ALL STORM DRAIN FACILITIES ON SITE AND ADJACENT TO THE SITE NEED TO BE PROTECTED FROM SITE RUNOFF. INLET PROTECTION DEVICES SHALL BE INSTALLED IMMEDIATELY AS INDIVIDUAL INLETS ARE INSTALLED.
6. ALL AREAS DISTURBED DURING CONSTRUCTION SHALL BE PAVED, SEEDED WITH NATIVE VEGETATION OR LANDSCAPED. REFER TO LANDSCAPE PLANS FOR SEED MIX AND PLANTING SPECIFICATIONS.
7. EROSION CONTROL STRUCTURES BELOW SODDED AREAS MAY BE REMOVED ONCE SOD AND FINAL LANDSCAPING ARE IN PLACE. EROSION CONTROL STRUCTURES BELOW SEEDED AREAS MUST REMAIN IN PLACE UNTIL THE ENTIRE AREA HAS ESTABLISHED A MATURE COVERING OF HEALTHY VEGETATION. EROSION CONTROL IN PROPOSED PAVEMENT AREAS SHALL REMAIN IN PLACE UNTIL PAVEMENT IS COMPLETE.
8. CONTRACTOR SHALL USE VEHICLE TRACKING CONTROL AT ALL LOCATIONS WHERE VEHICLES WILL ENTER OR EXIT THE SITE. CONTROL FACILITIES SHALL BE MAINTAINED WHILE CONSTRUCTION IS IN PROGRESS, MOVED WHEN NECESSARY AND REMOVED WHEN THE SITE IS PAVED.
9. ALL WASH WATER (CONCRETE TRUCKS, VEHICLE CLEANING, ETC.) SHALL BE DISPOSED OF IN A MANNER THAT PREVENTS CONTACT WITH STORM WATER DISCHARGES FROM THE SITE.
10. BLOWING DUST MUST BE CONTROLLED AT ALL TIMES. SITE WATERING SHALL BE USED TO CONTROL DUST. THE USE OF MOTOR OILS AND OTHER PETROLEUM BASED OR TOXIC LIQUIDS FOR DUST SUPPRESSION IS ABSOLUTELY PROHIBITED.
11. THE CONTRACTOR SHALL BE RESPONSIBLE FOR ADJUSTING THE EROSION CONTROL MEASURES (SILT FENCES, GRAVEL BAGS, ETC.) DUE TO GRADE CHANGES DURING THE DEVELOPMENT OF THE PROJECT.
12. ALL OFF-SITE CONSTRUCTION SHALL BE STABILIZED AT THE END OF EACH WORKING DAY. THIS INCLUDES BACKFILLING OF TRENCHES FOR UTILITY CONSTRUCTION AND PLACEMENT OF BITUMINOUS PAVING FOR ROAD CONSTRUCTION.
13. ALL MEASURES CONTAINED IN THIS PLAN SHALL BE MAINTAINED IN FULLY FUNCTIONAL CONDITION UNTIL FINAL STABILIZATION OF THE SITE. ALL EROSION AND SEDIMENTATION CONTROL MEASURES SHALL BE CHECKED BY A QUALIFIED PERSON AT LEAST ONCE EVERY SEVEN CALENDAR DAYS AND WITHIN 24 HOURS OF THE END OF A RAINFALL EVENT. ANY NEEDED CLEANING AND REPAIRS SHALL BE DONE IMMEDIATELY UPON DISCOVERY.
14. ALL UTILITY LINES SHALL BE CLEANED OF DIRT AND DEBRIS PRIOR TO BEING PUT INTO SERVICE. DOWN-GRADE LINES MUST BE PROTECTED FROM WASH-WATER DURING THE CLEANING TO AVOID CONTAMINATION AND COMPROMISING OUTFALL CLEANLINESS.

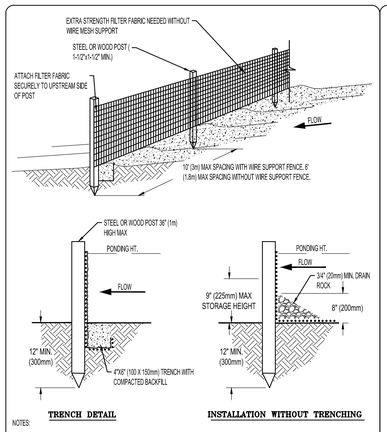

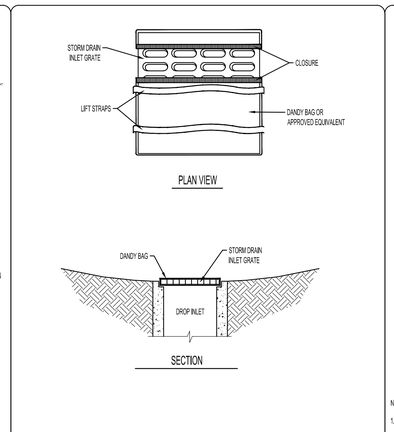

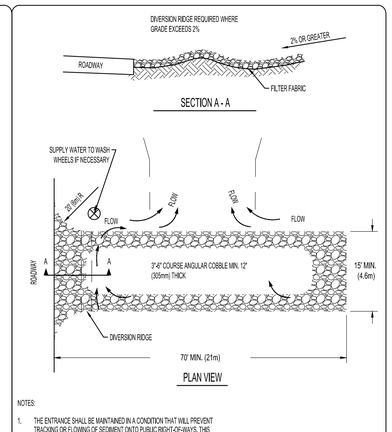

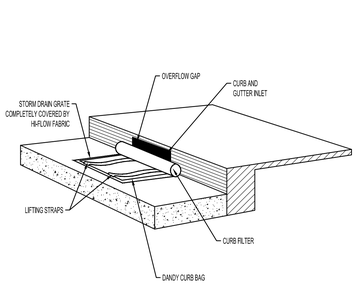

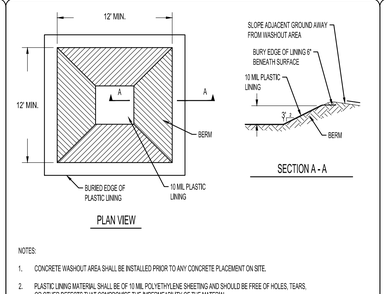

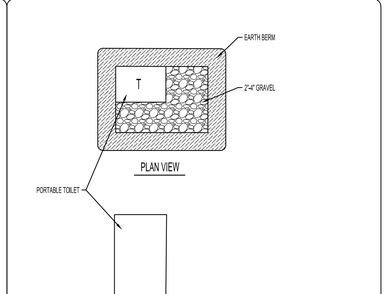

LIMIT OF DISTURBANCE NOTES:

1. THE LIMITS OF DISTURBANCE (L.O.D.) TO BE FIELD MARKED.
2. FIELD VERIFICATION OF AN L.O.D. BY CITY ENGINEERING.
3. PRECONSTRUCTION EROSION AND SEDIMENT CONTROL MEETING REQUIRED PRIOR TO ANY DISTURBANCE. THE REQUIRED ATTENDEES WILL BE DEVELOPER'S PROJECT MANAGER, CONSTRUCTION COMPANY'S ON SITE MANAGER.
4. MODIFICATION OF L.O.D. AS REQUIRED BY RESULTS OF PRECONSTRUCTION MEETING.
5. THE CONTRACTOR TO OBTAIN WRITTEN APPROVAL FROM THE CITY CERTIFYING THE L.O.D., DUST CONTROL, AND TREE PROTECTION HAS BEEN REVIEWED AND APPROVED PRIOR TO WORK BEGINNING

CONSTRUCTION PERIOD BEST MANAGEMENT PRACTICES NOTES:

1. CONTRACTOR WILL PERFORM EARTHWORK IN ACCORDANCE WITH THE CITY STANDARD SPECIFICATIONS, CITY EROSION, SEDIMENT, REVEGETATION REQUIREMENTS AND THE DUST CONTROL PLAN AS REQUIRED BY THE STATE OF UTAH DEPARTMENT OF ENVIRONMENTAL DIVISION OF AIR QUALITY.
2. THE CONTRACTOR WILL PERFORM EARTHWORK IN ACCORDANCE WITH THE PROJECT EARTHWORK SPECIFICATIONS AND THE EARTHWORK RECOMMENDATIONS FOUND IN THE GEOTECHNICAL INVESTIGATION REPORT PREPARED FOR THIS PROJECT. IN THE EVENT THAT THERE IS A CONFLICT BETWEEN THE DOCUMENTS MENTIONED (NOTE 2) AND THE CITY'S EROSION AND SEDIMENT CONTROL REQUIREMENTS OR THE DUST CONTROL PLAN AS REQUIRED BY THE STATE OF UTAH DEPARTMENT OF ENVIRONMENTAL DIVISION OF AIR QUALITY, THE CITY'S REQUIREMENTS AND THE STATE REQUIREMENTS WILL CONTROL.
3. L.O.D. BARRIERS WILL BE PROPERLY INSTALLED PRIOR TO ANY DISTURBANCE. L.O.D. BARRIERS ARE DEFINED AS SILT FENCE AND ENVIRONMENTAL FENCE.
4. INSTALL SILT FENCE ON ALL DOWNHILL SIDE OF L.O.D. SEE DETAIL AND SILT FENCE NOTES FOR CORRECT INSTALLATION PROCEDURE.
5. ENVIRONMENTAL FENCES ARE TO BE INSTALLED ON ALL UPHILL SIDE OF L.O.D.
6. THE L.O.D, SILT FENCE BARRIERS DO NOT REPLACE OR FUNCTION AS SEDIMENTATION B.M.P.S., ADDITIONAL SEDIMENT (BEST MANAGEMENT PRACTICES) BMPS WILL BE REQUIRED AS SHOWN ON THE PLANS OR AS REQUIRED BY THE CITY THROUGHOUT THE PROJECT AS UNFORESEEN SITUATIONS OCCUR.
7. WITHIN THE SAME WORKING DAY SOIL IS DISTURBED ALL SEDIMENT CONTROL B.M.PS. WILL BE INSTALLED. AN EXAMPLE OF SEDIMENT CONTROL BMP IS A SILT FENCE OR A TEMPORARY SEDIMENTATION BASIN, EXISTING VEGETATION WILL NOT BE BURIED, THE METHOD OF DISPOSAL WILL BE SUBMITTED AND APPROVED BY THE CITY.
8. INSTALL ALL SEDIMENTATION BMPS AS SHOWN ON PLANS AND AS DIRECTED BY THE CITY
9. DUST CONTROL MEASURES WILL BE ON SITE AND IN WORKING ORDER WHEN SOIL IS DISTURBED. DUST CONTROL WILL BE USED 24 HOURS SEVEN DAYS PER WEEK UNTIL SOIL IS RESEEDED AND PROTECTED. WATER USED TO CONTROL DUST WILL CONTAIN CALCIUM CHLORIDE OR SIMILAR ADDITIVE. THE DUST CONTROL PLAN AS REQUIRED BY THE STATE OF UTAH DEPARTMENT OF ENVIRONMENTAL DIVISION OF AIR QUALITY DOES NOT REPLACE THE CALCIUM CHLORIDE REQUIREMENT.
10. INSTALL IMPROVEMENTS AS SHOWN ON THE APPROVED CONSTRUCTION PLANS.
11. ALL DISTURBED SOIL WILL BE MADE STABLE AS WITHIN 21 DAYS OF DISTURBANCE.
12. TEMPORARY AND PERMANENT SEDIMENT BEST MANAGEMENT PRACTICES WILL REMAIN FUNCTIONAL AT ALL TIMES THROUGH THE ENTIRE PROJECT AND UNTIL ALL DISTURBED SOIL HAS BEEN STABILIZED TO PREVENT EROSION. WRITTEN APPROVAL MUST BE OBTAINED FROM THE CITY CERTIFYING ALL DISTURBED SOIL IS STABLE BEFORE ABANDONING SEDIMENTATION BEST MANAGEMENT PRACTICES.
13. IF THE EXISTING GRADES ARE DIFFERENT THAN WHAT IS SHOWN ON THE GRADING PLAN, STOP WORK AND NOTIFY THE CITY.
14. IF THE PROJECT REQUIRES EXPORT OR IMPORT MATERIAL TO ACHIEVE A BALANCED SITE. THE CONTRACTOR IS TO KEEP OFFSITE ROADS CLEAN AT ALL TIMES. FAILURE TO KEEP STREETS CLEAN WILL RESULT IN A MANDATORY WORK STOP ORDER BEING ISSUED ON THE IMPORT/ EXPORT OPERATION.
15. THE PROJECT CONTRACTOR IS RESPONSIBLE FOR KEEPING ALL PAVED STREETS ADJACENT TO OR ABUTTING THE GRADING PROJECT CLEAN AND FREE OF DIRT, MUD, AND DEBRIS AT ALL TIMES. WHEREAS THIS IS A PUBLIC HEALTH AND SAFETY ISSUE. FAILURE TO COMPLY WILL RESULT IN A MANDATORY WORK STOP ORDER BEING ISSUED OVER THE ENTIRE PROJECT, INCLUDING COMMERCIAL AND RESIDENTIAL CONSTRUCTION PROJECTS.
16. THE CONTRACTOR WILL PROVIDE ADDITIONAL TEMPORARY EROSION CONTROL PLANS, AND PERMITS AS REQUIRED BY THE CITY, THE COUNTY AND THE STATE OF UTAH AS REQUIRED THROUGHOUT THE DURATION OF THE PROJECT.
17. FAILURE TO FOLLOW THE SEQUENCE OF CONSTRUCTION SHALL RESULT IN THE ISSUANCE OF A WORK STOP ORDER BEING ISSUED.
18. CONCRETE TRUCKS TO USE PRE-ASSIGNED WASH OUT AREA. CONCRETE TRUCKS ARE NOT TO BE CLEANED OUT OR WASHED DOWN IN THE PUBLIC RIGHT-OF-WAY.
19. PORTABLE TOILETS TO BE LOCATED ADJACENT TO CONTRACTOR TRAILER. TOILETS SHALL BE MAINTAINED BY CONTRACTOR.
20. CONSTRUCTION WASTE BIN TO BE LOCATED NEAR CONTRACTOR TRAILER. ALL CONSTRUCTION WASTE TO BE PLACED IN WASTE BIN.
21. ALL CONSTRUCTION PERIOD BEST MANAGEMENT PRACTICES (BMPS) ARE TO BE INSPECTED AND MAINTAINED AT LEAST WEEKLY, ALSO BEFORE AND AFTER EACH STORM EVENT.
22. CONTRACTOR SHALL BE REQUIRED TO KEEP A RECORD OF ALL INSPECTIONS AND MAINTENANCE ON SITE WITH THE STORM WATER POLLUTION PREVENTION PLAN.

CONSTRUCTION PERIOD BEST MANAGEMENT PRACTICES

CRSA

PROJECT **24-038**

BID PACKAGE #1 2024-08-26

REVISIONS

NO.	DATE	DESCRIPTION
1	09/09/2024	ADDENDUM #1

REVIEWED FOR CODE COMPLIANCE
Reviewed By: Matthew Peterson
Date: 09/12/2024
CITY OF FACILITIES CONSTRUCTION AND MANAGEMENT

DAVIS TECHNICAL COLLEGE WELDING TECHNOLOGY BUILDING

550 EAST 300 SOUTH,
KAYSVILLE, UT 84037

DAVISTECH
DAVIS TECHNICAL COLLEGE

STATE OF UTAH
Benjamin Nielsen
09/09/2024
13775865-2202
PROFESSIONAL ENGINEER

EROSION CONTROL DETAILS

C510.1

(801) 355-5915

MERIDIAN ENGINEERING, INC.
7628 WEST 7150 SOUTH, SUITE 105
SOUTH JORDAN, UTAH 84095
PHONE (801) 569-1315 FAX (801) 569-1319

Blue Stakes of UTAH 811
Utah811.com

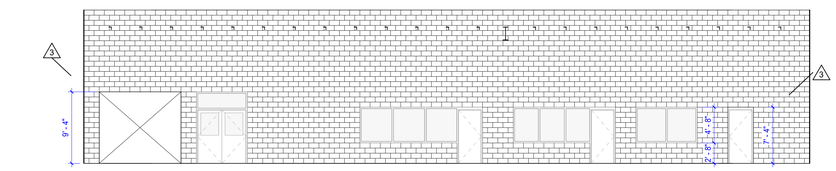

E1 AE100.1 MASONRY ELEVATION - WEST
1/8" = 1'-0"

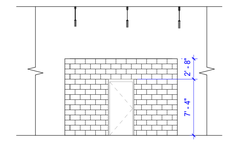

E4 AE100.1 MASONRY ELEVATION SOUTH
1/8" = 1'-0"

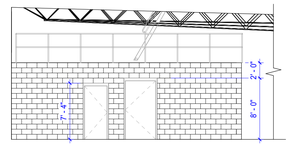

E5 AE100.1 MASONRY ELEVATION EAST
1/8" = 1'-0"

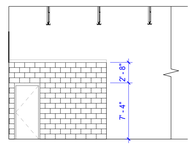

D4 AE100.1 MASONRY ELEVATION SOUTH 2
1/8" = 1'-0"

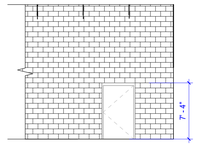

D5 AE100.1 MASONRY ELEVATION SOUTH 3
1/8" = 1'-0"

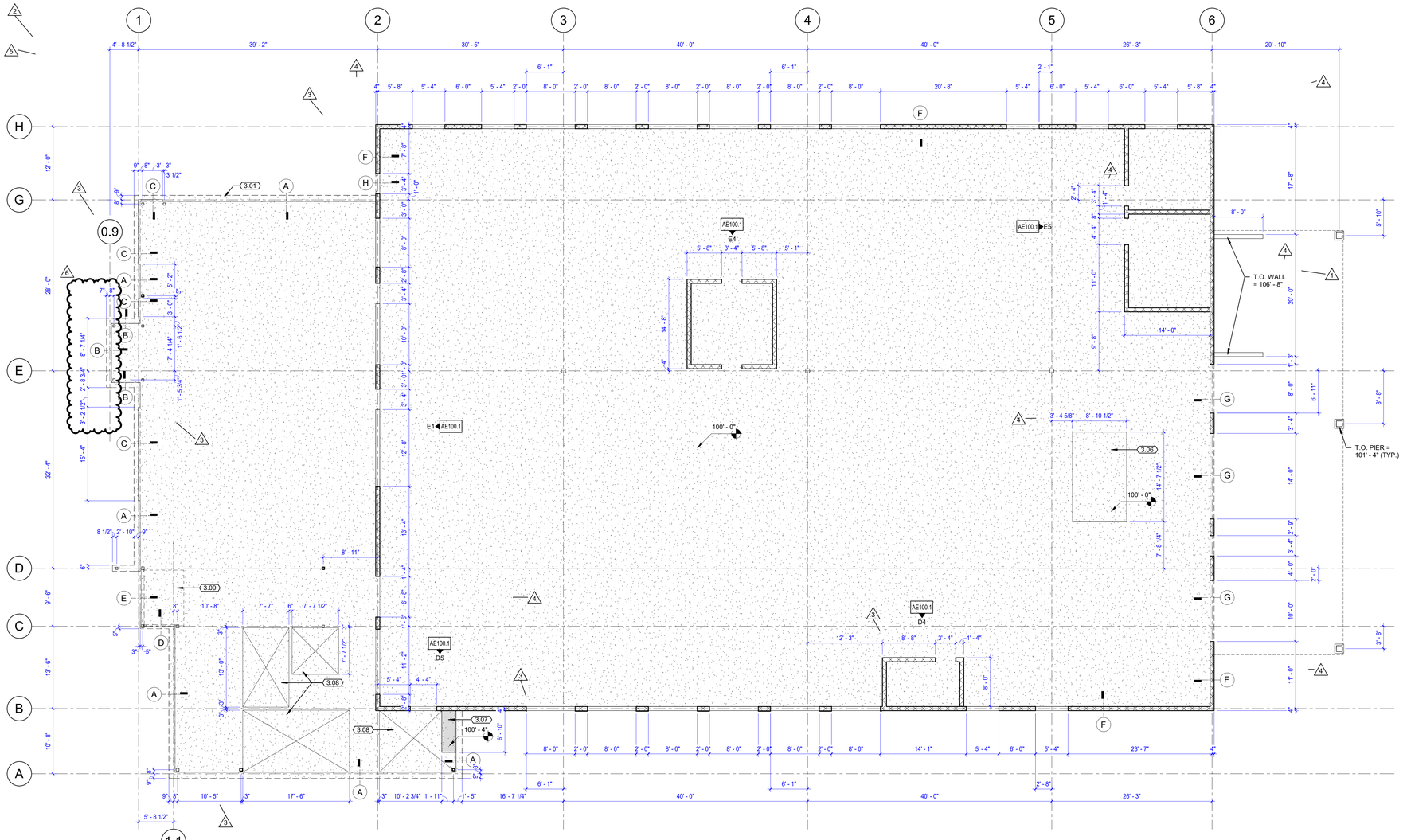

A1 AE100.1 DIMENSION CONTROL PLAN
1/8" = 1'-0"

GENERAL NOTES

- GENERAL CONTRACTOR SHALL FIELD VERIFY ALL CONDITIONS AND SHALL REPORT TO THE ARCHITECT ANY UNKNOWN CONDITIONS, ERRORS OR CONFLICT IN THE DRAWINGS BEFORE BEGINNING WORK.
- DO NOT SCALE DRAWINGS
- SEE ELEVATIONS FOR OPENING HEIGHTS.

LEGEND

SLAB ON GRADE	
HOUSEKEEPING PAD	
MASONRY WALL	

KEYNOTES

3.01	CONCRETE FOUNDATION WALL
3.06	ISOLATED CONCRETE SLAB
3.07	4" HOUSEKEEPING PAD
3.08	2% MIN. SLOPE TO FLOOR DRAIN
3.09	RECESS FOR WALK-OFF MAT AS NECESSARY

SLAB EDGE CONDITIONS

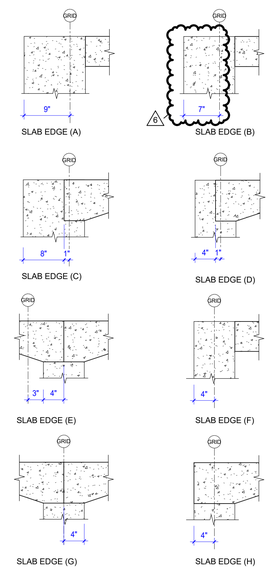

CRSA

PROJECT **24-038**

BID PACKAGE #1 2024-08-26

REVISIONS

NO.	DATE	DESCRIPTION
2	2024-09-25	ADDENDUM #02
3	2024-10-10	ADDENDUM #03
4	2024-10-25	ADDENDUM #04
5	2024-11-01	ADDENDUM #05
6	2024-11-14	RFI #010

DAVIS TECHNICAL COLLEGE
WELDING TECHNOLOGY BUILLDING
355 SOUTH 650 EAST
KAYSVILLE, UT 84037

DAVISTECH
DAVIS TECHNICAL COLLEGE

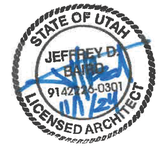

DIMENSION CONTROL PLAN
AE100.1

11/14/2024 3:16:08 PM

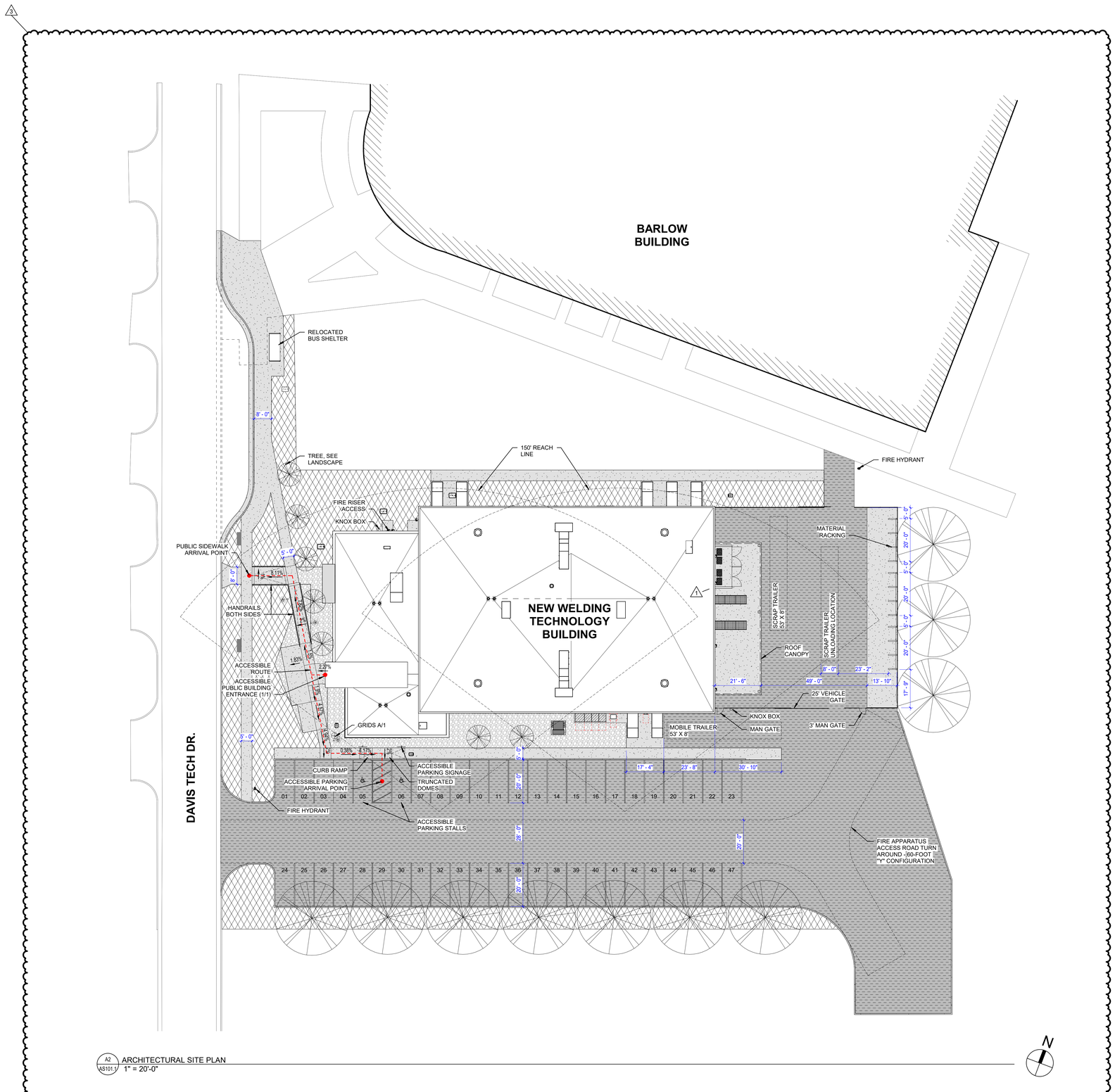

A2 / AS101.1 ARCHITECTURAL SITE PLAN
1" = 20'-0"

GENERAL NOTES

- GENERAL CONTRACTOR SHALL FIELD VERIFY ALL CONDITIONS AND SHALL REPORT TO THE ARCHITECT ANY UNKNOWN CONDITIONS, ERRORS OR CONFLICT IN THE DRAWINGS BEFORE BEGINNING WORK.
- DO NOT SCALE DRAWINGS
- ITEMS HALF-TONED SHOWN FOR REFERENCE ONLY.

ARCHITECTURAL SITE PLAN LEGEND

ASPHALT PAVING	
CONCRETE PAVING	
PLANTING AREAS	
TURF AREAS	
EXTENTS OF SITE DEMOLITION	
EGRESS PATH	

PARKING CALCULATION

SEE IBC 2021 TABLE 1106.2

TOTAL PARKING SPACES PROVIDED	47
REQUIRED MINIMUM NUMBER OF ACCESSIBLE SPACES	2
NUMBER OF ACCESSIBLE SPACES PROVIDED	2

KEYNOTES

CRSA

PROJECT **24-038**

BID PACKAGE #1 2024-08-26

REVISIONS

NO.	DATE	DESCRIPTION
1	2024-09-06	ADDENDUM #01
3	2024-10-10	ADDENDUM #03

REVIEWED FOR CODE COMPLIANCE
Andrew Peterson
10/3/2024
DAVIS TECHNICAL COLLEGE FACILITIES CONSTRUCTION AND MAINTENANCE DEPARTMENT

DAVIS TECHNICAL COLLEGE
WELDING TECHNOLOGY BUILDING
355 SOUTH 650 EAST
KAYSVILLE, UT 84037

DAVISTECH
DAVIS TECHNICAL COLLEGE

STATE OF UTAH
JEFFREY D. SAXTON
9144226-0301
LICENSED ARCHITECT

ARCHITECTURAL SITE PLAN
AS101.1

10/10/2024 6:12:16 PM

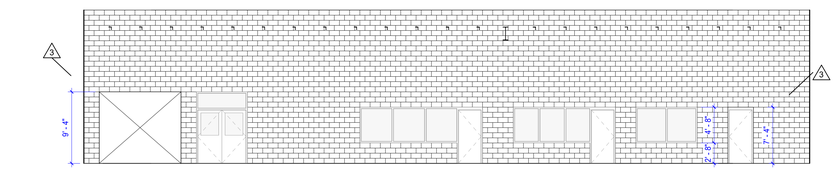

E1 AE100.1 MASONRY ELEVATION - WEST
1/8" = 1'-0"

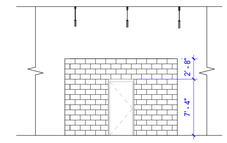

E4 AE100.1 MASONRY ELEVATION SOUTH
1/8" = 1'-0"

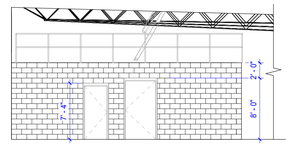

E5 AE100.1 MASONRY ELEVATION EAST
1/8" = 1'-0"

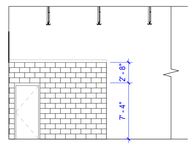

D4 AE100.1 MASONRY ELEVATION SOUTH 2
1/8" = 1'-0"

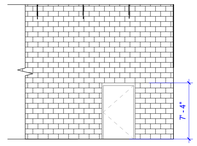

D5 AE100.1 MASONRY ELEVATION SOUTH 3
1/8" = 1'-0"

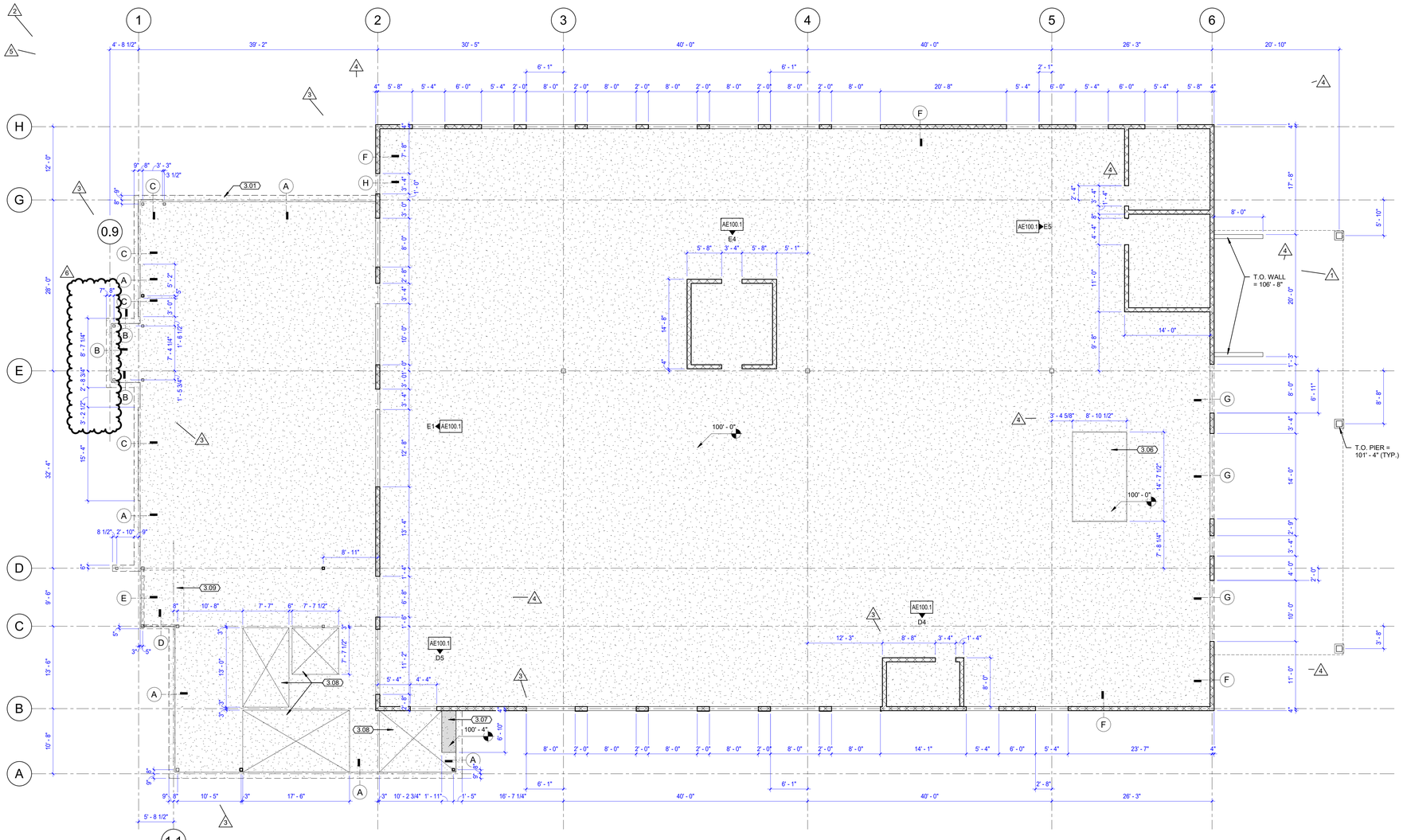

A1 AE100.1 DIMENSION CONTROL PLAN
1/8" = 1'-0"

GENERAL NOTES

- GENERAL CONTRACTOR SHALL FIELD VERIFY ALL CONDITIONS AND SHALL REPORT TO THE ARCHITECT ANY UNKNOWN CONDITIONS, ERRORS OR CONFLICT IN THE DRAWINGS BEFORE BEGINNING WORK.
- DO NOT SCALE DRAWINGS
- SEE ELEVATIONS FOR OPENING HEIGHTS.

LEGEND

SLAB ON GRADE	
HOUSEKEEPING PAD	
MASONRY WALL	

KEYNOTES

3.01	CONCRETE FOUNDATION WALL
3.06	ISOLATED CONCRETE SLAB
3.07	4" HOUSEKEEPING PAD
3.08	2% MIN. SLOPE TO FLOOR DRAIN
3.09	RECESS FOR WALK-OFF MAT AS NECESSARY

SLAB EDGE CONDITIONS

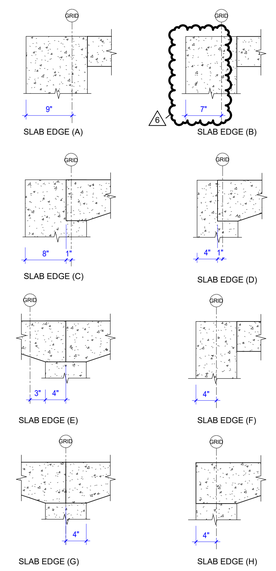

CRSA

PROJECT **24-038**

BID PACKAGE #1 2024-08-26

REVISIONS

NO.	DATE	DESCRIPTION
2	2024-09-25	ADDENDUM #02
3	2024-10-10	ADDENDUM #03
4	2024-10-25	ADDENDUM #04
5	2024-11-01	ADDENDUM #05
6	2024-11-14	RFI #010

DAVIS TECHNICAL COLLEGE
WELDING TECHNOLOGY BUILLDING
355 SOUTH 650 EAST
KAYSVILLE, UT 84037

DAVISTECH
DAVIS TECHNICAL COLLEGE

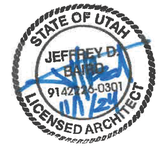

DIMENSION CONTROL PLAN
AE100.1

11/14/2024 3:16:08 PM

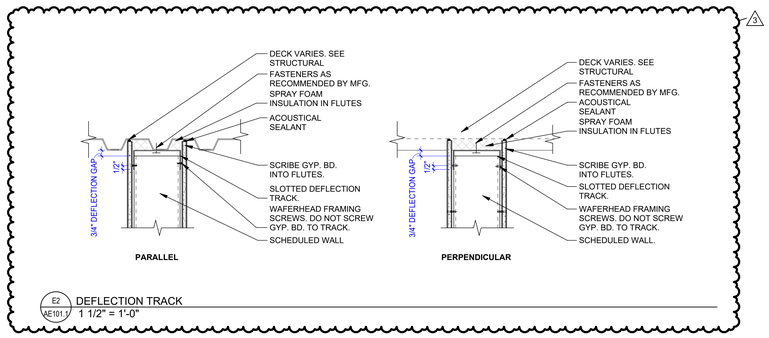

E2 AE101.1 DEFLECTION TRACK
1 1/2" = 1'-0"

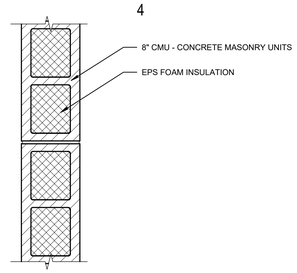

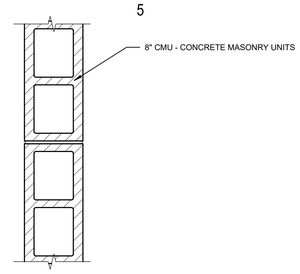

M1			M2		
	FIRE RATING:	N/A		FIRE RATING:	N/A
	FIRE TEST:	N/A		FIRE TEST:	N/A
	STC RATING:	N/A		STC RATING:	N/A
	SOUND TEST:	N/A		SOUND TEST:	N/A
	WALL HEIGHT:	SEE ELEVATIONS		WALL HEIGHT:	SEE ELEVATIONS

GENERAL NOTES

- GENERAL CONTRACTOR SHALL FIELD VERIFY ALL CONDITIONS AND SHALL REPORT TO THE ARCHITECT ANY UNKNOWN CONDITIONS, ERRORS OR CONFLICT IN THE DRAWINGS BEFORE BEGINNING WORK.
- DO NOT SCALE DRAWINGS
- ITEMS HALF-TONED SHOWN FOR REFERENCE ONLY.

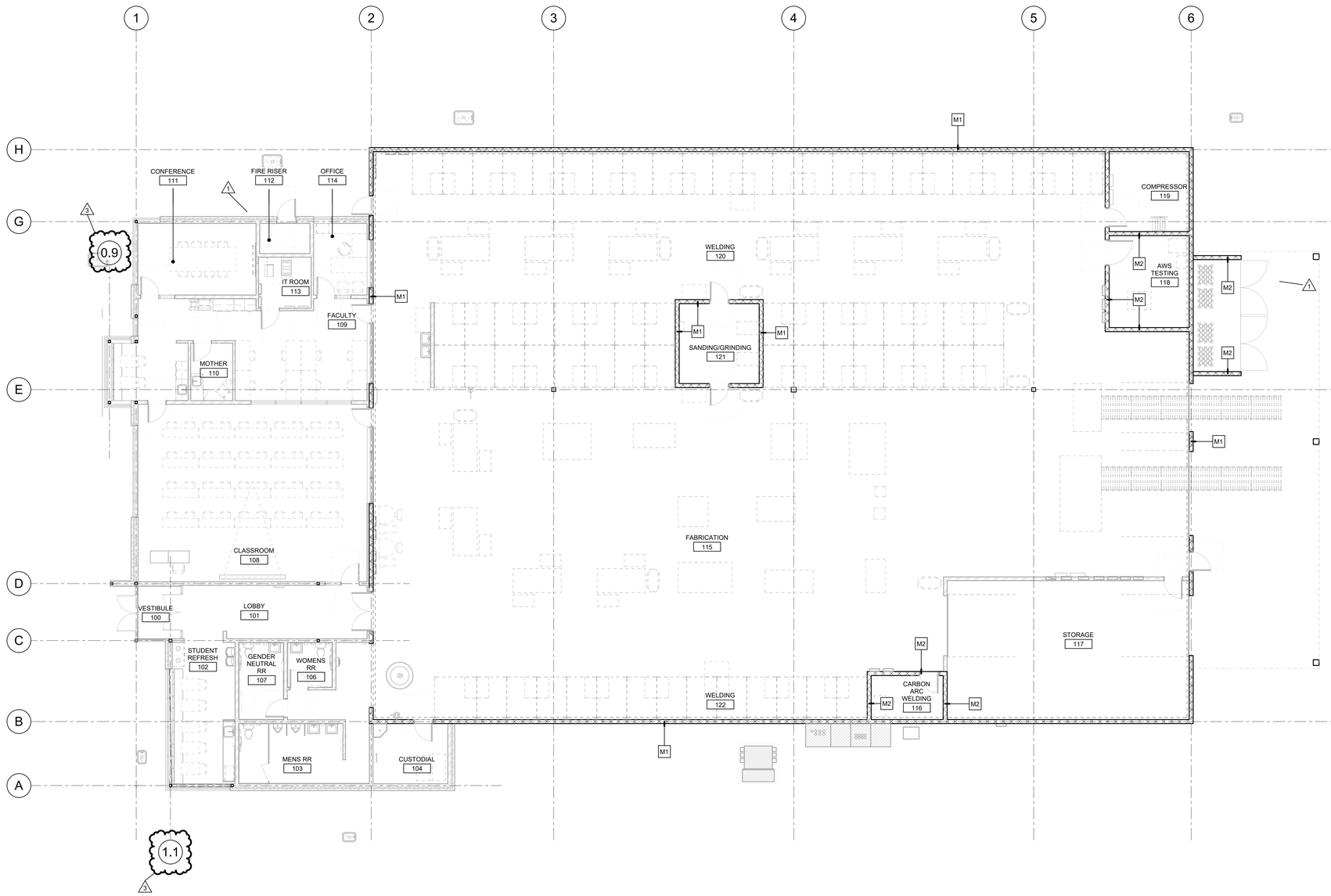

A1 AE101.1 LEVEL 1 FLOOR PLAN
1/8" = 1'-0"

KEYNOTES

CRSA

PROJECT **24-038**

BID PACKAGE #1 2024-08-26

REVISIONS

NO.	DATE	DESCRIPTION
1	2024-09-06	ADDENDUM #01
3	2024-10-10	ADDENDUM #03

REVIEWED FOR CODE COMPLIANCE
Jeffrey W Peterson
2024
DIVISION OF FACILITIES CONSTRUCTION AND MANAGEMENT

DAVIS TECHNICAL COLLEGE WELDING TECHNOLOGY BUILDING

355 SOUTH 650 EAST
KAYSVILLE, UT 84037

DAVISTECH
DAVIS TECHNICAL COLLEGE

STATE OF UTAH
JEFFREY D. BAIRD
9742226-0301
LICENSED ARCHITECT

LEVEL 1 FLOOR PLAN

AE101.1

GENERAL NOTES

- GENERAL CONTRACTOR SHALL FIELD VERIFY ALL CONDITIONS AND SHALL REPORT TO THE ARCHITECT ANY UNKNOWN CONDITIONS, ERRORS OR CONFLICT IN THE DRAWINGS BEFORE BEGINNING WORK.
- DO NOT SCALE DRAWINGS
- ITEMS HALF-TONED SHOWN FOR REFERENCE ONLY.

CEILING LEGEND

GYPSUM BOARD CEILING. PAINT.	C1 X'-X"
OPEN TO STRUCTURE ABOVE	C4 X'-X"
WINDOW SHADES	

KEYNOTES

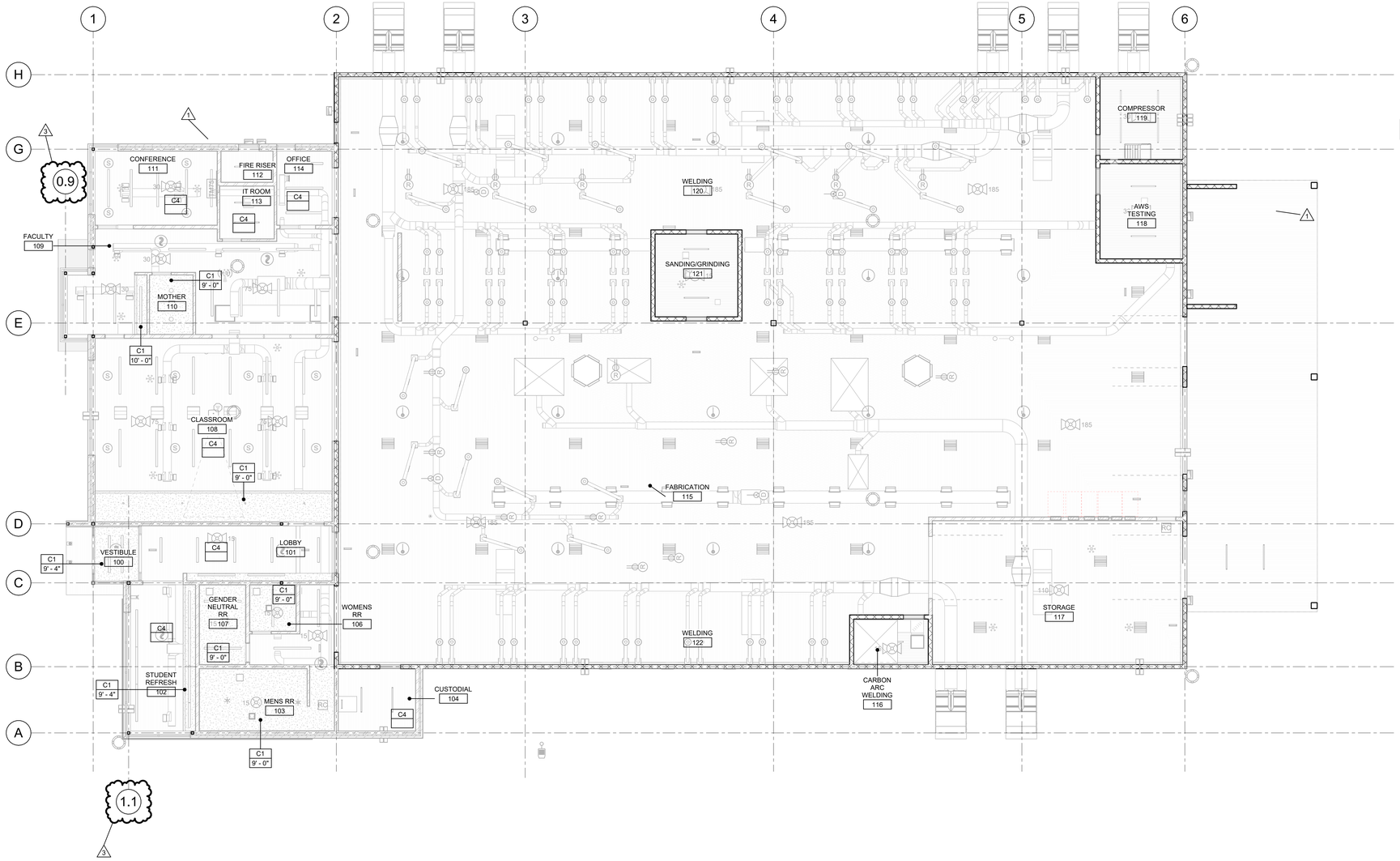

A1 / AE171.1 LEVEL 1 CEILING PLAN
1/8" = 1'-0"

10/10/2024 2:25:05 PM

CRSA

PROJECT **24-038**

BID PACKAGE #1 2024-08-26

REVISIONS

NO.	DATE	DESCRIPTION
1	2024-09-06	ADDENDUM #01
3	2024-10-10	ADDENDUM #03

REVIEWED FOR CODE COMPLIANCE
Andrew Peterson
10/10/2024
DIVISION OF FACILITIES CONSTRUCTION AND MANAGEMENT

DAVIS TECHNICAL COLLEGE WELDING TECHNOLOGY BUILDING

355 SOUTH 650 EAST
KAYSVILLE, UT 84037

DAVISTECH
DAVIS TECHNICAL COLLEGE

STATE OF UTAH
JEFFREY D. SAMPO
9142226-0301
LICENSED ARCHITECT

LEVEL 1 REFLECTED CEILING PLAN

AE171.1

GENERAL NOTES

- GENERAL CONTRACTOR SHALL FIELD VERIFY ALL CONDITIONS AND SHALL REPORT TO THE ARCHITECT ANY UNKNOWN CONDITIONS, ERRORS OR CONFLICT IN THE DRAWINGS BEFORE BEGINNING WORK.
- DO NOT SCALE DRAWINGS
- ITEMS HALF-TONED SHOWN FOR REFERENCE ONLY.

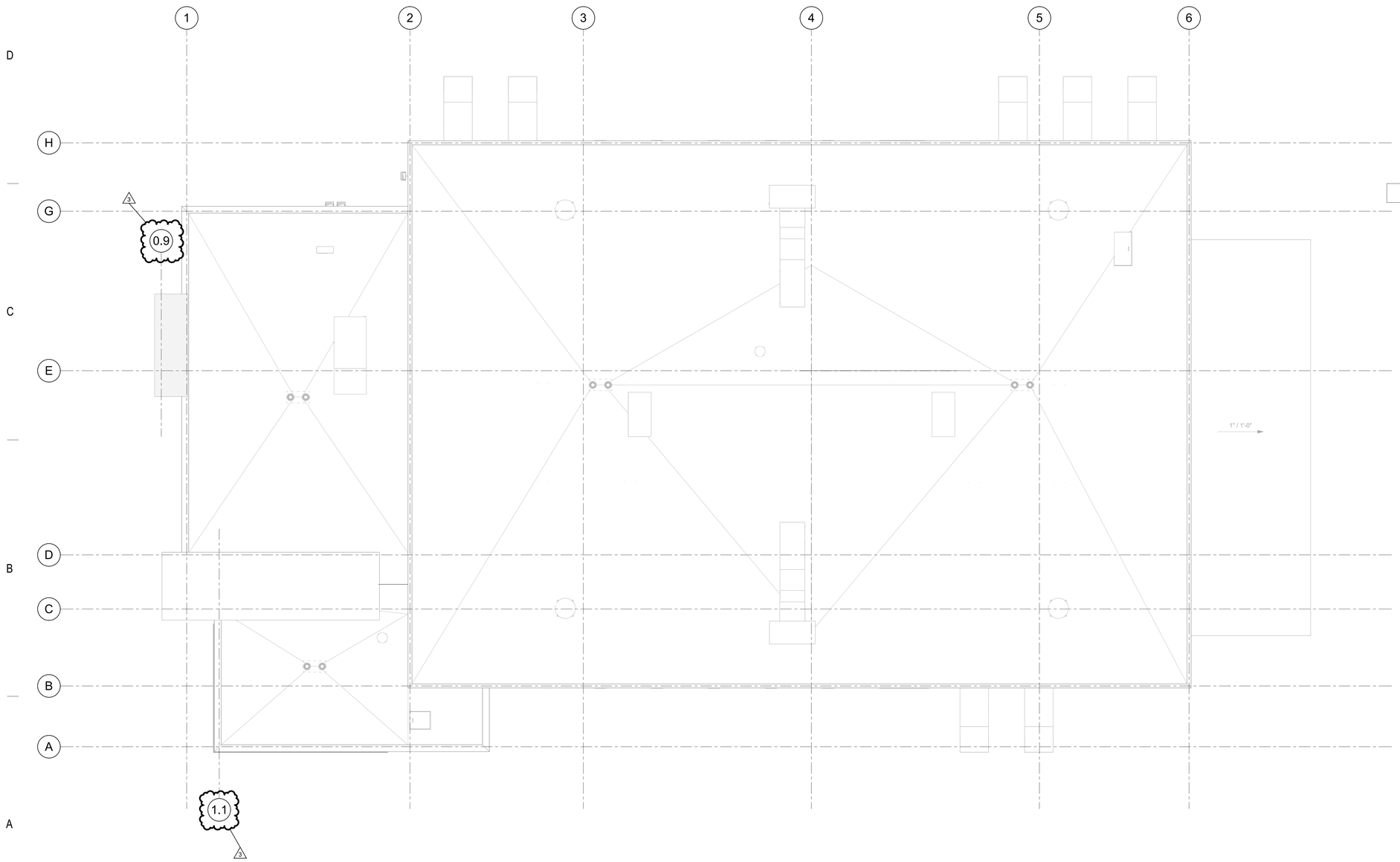

A1 / AE191.1 ROOF PLAN
1/8" = 1'-0"

KEYNOTES

CRSA

PROJECT **24-038**

BID PACKAGE #1 2024-08-26

REVISIONS

NO.	DATE	DESCRIPTION
3	2024-10-10	ADDENDUM #03

REVIEWED FOR CODE COMPLIANCE
Andrew Peterson
10/10/2024
DIVISION OF FACILITIES CONSTRUCTION AND MANAGEMENT

DAVIS TECHNICAL COLLEGE
WELDING TECHNOLOGY BUILDING
355 SOUTH 650 EAST
KAYSVILLE, UT 84037

DAVISTECH
DAVIS TECHNICAL COLLEGE

STATE OF UTAH
JEFFREY D. SAXTON
9144226-0301
LICENSED ARCHITECT

ROOF PLAN
AE191.1

10/1/2024 2:25:09 PM

GENERAL NOTES

- GENERAL CONTRACTOR SHALL FIELD VERIFY ALL CONDITIONS AND SHALL REPORT TO THE ARCHITECT ANY UNKNOWN CONDITIONS, ERRORS OR CONFLICT IN THE DRAWINGS BEFORE BEGINNING WORK.
- DO NOT SCALE DRAWINGS
- ITEMS HALF-TONED SHOWN FOR REFERENCE ONLY.

CRSA

PROJECT **24-038**

BID PACKAGE #1 2024-08-26

REVISIONS

NO.	DATE	DESCRIPTION
1	2024-09-06	ADDENDUM #01
2	2024-09-25	ADDENDUM #02
3	2024-10-10	ADDENDUM #03

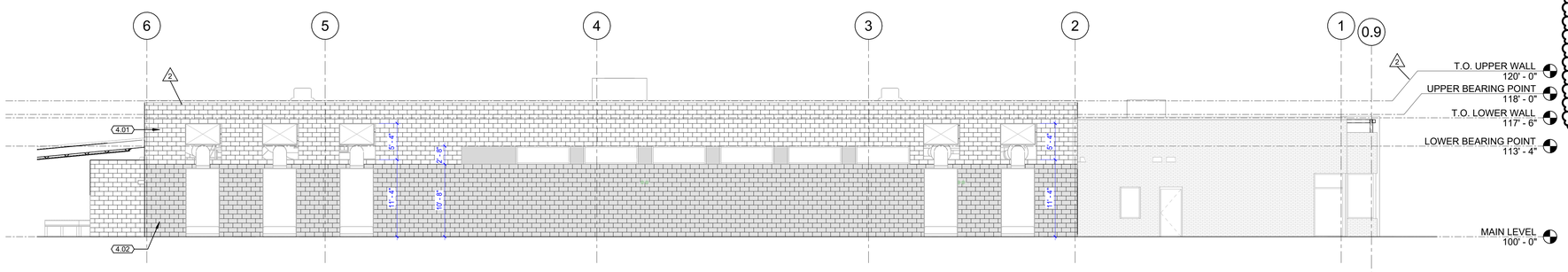

D1 AE201.1 BUILDING ELEVATION - NORTH
1/8" = 1'-0"

LEGEND

SMOOTH FACE CMU COLOR SUNROC 'OAK'

SPLIT-FACE CMU COLOR SUNROC 'TUMBLEWEED'

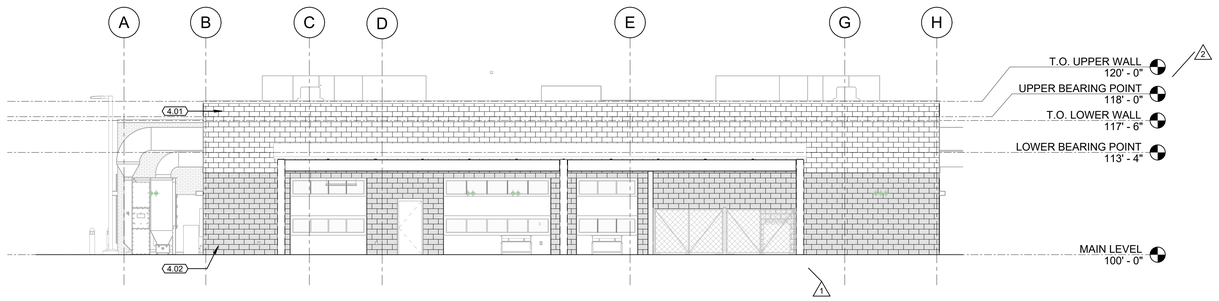

C2 AE201.1 BUILDING ELEVATION - EAST
1/8" = 1'-0"

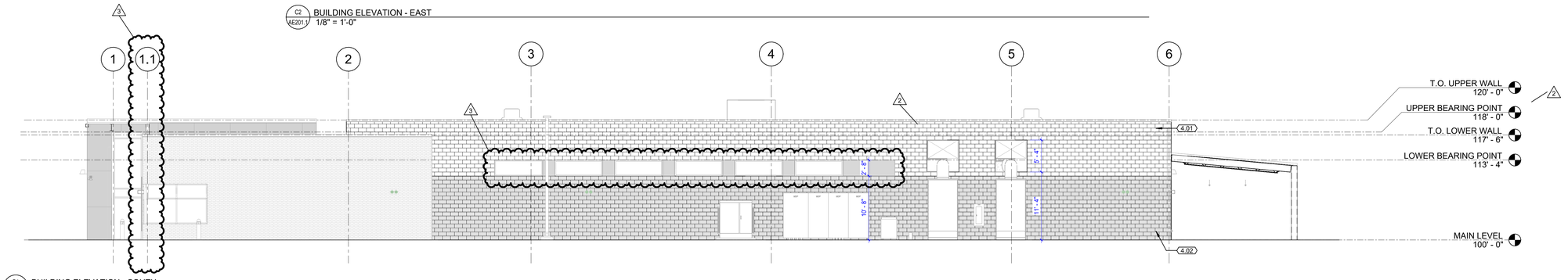

B1 AE201.1 BUILDING ELEVATION - SOUTH
1/8" = 1'-0"

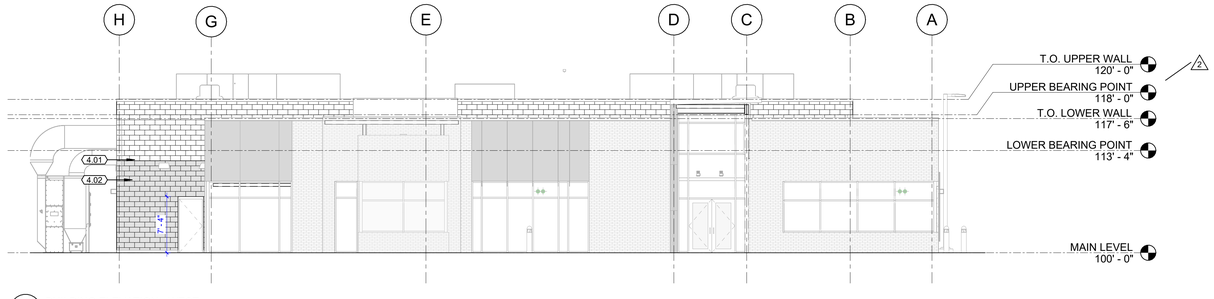

A2 AE201.1 BUILDING ELEVATION - WEST
1/8" = 1'-0"

KEYNOTES

4.01	SMOOTH FACE CONCRETE MASONRY UNIT
4.02	SPLIT FACE CONCRETE MASONRY UNIT

REVIEWED FOR CODE COMPLIANCE
STATE OF UTAH
JEFFREY D. BAIRD
9142226-0301
LICENSED ARCHITECT

DAVIS TECHNICAL COLLEGE WELDING TECHNOLOGY BUILDING

355 SOUTH 650 EAST
KAYSVILLE, UT 84037

DAVISTECH
DAVIS TECHNICAL COLLEGE

STATE OF UTAH
JEFFREY D. BAIRD
9142226-0301
LICENSED ARCHITECT

BUILDING ELEVATIONS

AE201.1

GENERAL STRUCTURAL NOTES

GENERAL

1. The structural notes are intended to complement the project specifications. Specific notes and details in the drawings shall govern over the structural notes and typical details.
2. Typical details and sections shall apply where specific details are not shown.
3. The contractor shall verify all site conditions and dimensions. If actual conditions differ from those shown in the contract drawings, the contractor shall immediately notify the architect/engineer before proceeding with the fabrication or construction of any affected elements. Discrepancies should be brought the attention of the architect prior to fabrication or construction.
4. Drawings shall not be scaled for the purpose of preparing shop drawings or for construction. Where dimensions on the design drawings are not provided or inferred, the contractor may scale drawings only to estimate member lengths for the purpose of bidding.
5. Changes to these contract drawings may be made only by an authorized representative of Dunn Associates, Inc. Dunn Associates, Inc. shall not be held responsible or liable for any claims arising directly or indirectly from changes made without written authorization by an authorized representative of Dunn Associates, Inc.
6. Omissions or conflicts between the contract drawings and/or specifications shall be brought to the attention of the architect/engineer before proceeding with any work involved. In case of conflict, follow the most stringent requirement as directed by the architect/engineer at no additional cost to the owner.
7. The contractor shall submit a written request to the architect/engineer before proceeding with any changes, substitutions, or modifications. Any work done by the contractor before receiving written approval will be at the contractor's risk. These contract documents note and describe potential bid alternate details that may be requested from and approved by the Engineer of Record during the bidding and negotiation phase. The contractor may also submit to the architect/engineer for approval other substitutions or modifications to the design drawings as bid alternates during the bidding and negotiation phase. Field modifications to structural elements are not permitted without notification and approval by the Engineer of Record.
8. The contractor shall coordinate with all trades any items that are to be integrated into the structural system such as openings, penetrations, mechanical and electrical equipment, etc. Structural drawings do not show all openings. Refer to other discipline drawings. Sizes and locations of mechanical and other equipment that differs from those shown on the contract drawings shall be reported to the architect/engineer. Contractor shall take measures as required to insure that construction loads shall not exceed design loads for the structure.
9. Any structural items shown on other discipline's drawings that are not shown on the structural drawings, but that are noted as "refer to structural drawings" for additional information, shall be brought to the attention of the structural engineer by the contractor.
10. Items such as fireproofing, waterproofing, insulation, vapor barrier, etc, may be shown or noted on structural drawings for reference only. Refer to the architectural drawings or specifications for more information.
11. The contractor shall be responsible for means, methods, techniques, sequences, and procedures in order to comply with the contract drawings and specifications. The contractor shall provide adequate shoring and bracing as required for the chosen method of erection. Shoring and bracing shall remain in place until final connections for the permanent members are completed. The building shall not be considered stable until all final connections are completed. Walls shall not be considered self-supporting and shall be braced until the floor/roof system is completed.
12. Site observations by a field representative of Dunn Associates, Inc. shall not be construed as approval of construction, the procedures, nor special inspection.
13. All work shall be done in accordance with OSHA requirements. Potential conflicts between these documents and OSHA requirements shall be brought to the attention of the structural engineer before proceeding with the work.
14. Shop Drawings submittals:
    A. Shop drawings include plans, details, calculations and/or other relevant design information. Review of shop drawings and submittals by Dunn Associates, Inc. is for general compliance only and is not intended for approval. The shop drawing review shall not relieve the contractor from the responsibility of completing the project according to the contract documents.
    B. Submittals for the following items shall be submitted to the Project Architect/Engineer for review prior to fabrication and/or installation:
        1. Concrete Mix Design
        2. Concrete Reinforcing
        3. Masonry Block and Grout
        4. Masonry Reinforcing
        5. Anchorage and Embeds
        6. Structural Steel
        7. Steel Decking
        8. Deferred Design Items
    C. Quality control submittals shall be submitted to special inspector for review prior to fabrication/installation. Courtesy copies shall be provided to the project architect and engineer for their records.
    D. Detailing and shop drawing production for structural elements will require information (including dimensions) contained in the architectural, structural and/or other consultants' drawings. The structural drawings shall be used in conjunction with the architectural and other consultant's drawings. See the Architectural Drawings for dimensions, doors, windows, non-bearing interior and exterior walls, elevations, slopes, stairs, curbs, drains, recesses, depressions, railings, waterproofing, finishes, chamfers, kerfs, etc.
    E. Shop drawings made from reproductions of the structural drawings will be rejected unless the contractor signs a release agreement prior to the shop drawings being reviewed. The contractor may also obtain electronic files of the plan sheets after signing a release agreement. Electronic files of the detail sheets and schedule sheets will not be made available.
    F. The Contractor may choose to submit shop drawings and submittals for review electronically. The Contractor may do this provided a minimum of one hard copy set is submitted for review. The submittal will be stamped as received by Dunn Associates, Inc. when the hard copy is received by our office. Hard copies of small submittals need not be submitted if the Contractor receives the approval for this exception by the Engineer of Record.

BASIS OF DESIGN

1. Governing Building Code ..... International Building Code 2021
2. Risk Category III
3. Floor Live Loads
    A. Uniformly Distributed Loads
        1. Offices + Partitions ..... 80 psf (reducible)
        2. Public Rooms & Assembly Areas ..... 100 psf (unreducible)
        3. Mechanical Rooms, Light Storage ..... 125 psf (unreducible)
    B. Concentrated Loads
        1. Offices ..... 2000 lbs
        2. Schools ..... 1000 lbs
4. Roof Live Load (Not concurrent with Roof Snow Load) ..... 20 psf or 300 lbs
5. Rainfall Intensity & Load
    A. Primary Drainage Design (60-min/100 yr storm) ..... 2.31 in/hr
    B. Secondary Drainage Design (15-min/100 yr storm) ..... 5.55 in/hr
    C. Rain Load ..... 21 psf (2" static+2" dynamic = 4" total head), to be confirmed with roof drain designer
6. Roof Snow Load Criteria (Drift loads are shown on plan)
    A. Ground Snow Load ..... P_g = 37 psf
    B. Flat Roof Snow Load ..... P_f = 28.5 psf
    C. Snow Exposure Factor ..... C_e = 1.0
    D. Thermal Factor ..... C_t = 1.0, 1.1 (open air structures)
    E. Slope Factor ..... G_s = 1.0
    F. Snow Load Importance Factor ..... I_s = 1.1
7. Wind Design Criteria
    A. Basic Wind Design Speed ..... V = 140 mph (Vasd = 0.78V)
    B. Wind Exposure ..... B
    C. Internal Pressure Coefficient ..... ± 0.18
    D. Components and Cladding ..... See note 10 below
8. Seismic Design Criteria
    A. Mapped Spectral Response Accelerations
        1. 0.2-Second (Short) Period Acceleration ..... S_S = 1.311
        2. 1-Second Acceleration ..... S_1 = 0.483
    B. Design Spectral Response Accelerations
        1. 0.2-Second (Short) Period Acceleration ..... S_{DS} = 0.874
        2. 1-Second Acceleration ..... S_{D1} = 0.605
    C. Site Class (Soil Profile) ..... D
    D. Seismic Importance Factor ..... I_e = 1.25
    E. Seismic Design Category ..... D
    F. Lateral Force Resisting System(s) ..... Special Masonry Shear Walls, Metal Stud Shear Walls, Chpt. 13 "appendages"
        1. Response Modification Coefficient ..... R = 5, 6 1/2, Rp=2.5
        2. System Overstrength Factor ..... Ω_0 = 2.5, 3, 2
        3. Deflection Amplification Factor ..... C_d = 3.5, 4, ap=2.5
        4. Design Base Shear ..... V = C_s*W = 0.175W, where W is structural weight
    G. Analysis Procedure ..... Equivalent Lateral Force
9. Serviceability Criteria
    A. Interstory Seismic/Wind Drift ..... Δa < 0.02h (h' is story height)
    B. Deflection Limits, unless noted otherwise in GSN ..... Total ..... Live/Snow/Wind
        Roof ..... L/240 ..... L/360
        Stairs ..... L/480 ..... L/800(1/4" max)
        Perimeter ..... ___ ..... L/600(3/8" max)
        Wall ..... ___ ..... L/240(1" max)

Building Maximum Story Drift

Level	Floor-to-Floor Height	Elastic Story Drift	Elastic Drift Ratio	Inelastic Story Drift	Inelastic Drift Ratio
Roof	17.25'	0.006"	= 0	0.017"	= 0
Low Roof	13.33'	0.14"	0.0008	0.24"	0.0015

10. Wind Loads on Components and Cladding based on ASCE 7 Chapter 30, parts 1 -5 are shown below at service level (0.6W). Dimension 'a' = 7.0 feet. For appurtances, parapets, roof top equipment, etc. designer to use parts 6-7 with qh = 17.39 psf (0.6W).

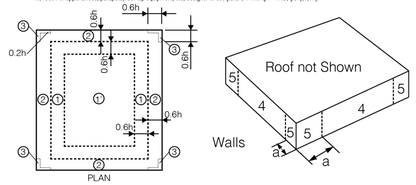

Figure 30.3-2A

Figure 30.3-1

Roof Pressure Diagram (Zones 1-3, including overhangs 'OH' where applicable) and Wall Pressure Diagram (Zones 4-5)

Wind Pressure Summary for C&C Zones based Upon Areas Ch 30 Pt 1-5 (Table 1 of 2)
All wind pressures include a load factor of 0.6

Z o n e	Figure	A <= 10.00 ft² psf	A = 20.00 ft² psf	A = 50.00 ft² psf	A = 100.00 ft² psf
1'	30.3-2A	9.60 -11.27	9.60 -11.27	9.60 -11.27	9.60 -11.27
1	30.3-2A	9.60 -19.61	9.60 -18.32	9.60 -16.61	9.60 -15.32
2	30.3-2A	9.60 -25.87	9.60 -24.21	9.60 -22.01	9.60 -20.35
3	30.3-2A	9.60 -35.26	9.60 -31.94	9.60 -27.54	9.60 -24.21
4	30.3-1	11.27 -12.21	10.77 -11.71	10.11 -11.05	9.61 -10.55
5	30.3-1	11.27 -15.02	10.77 -14.02	10.11 -12.71	9.61 -11.71

Wind Pressure Summary for C&C Zones based Upon Areas Ch 30 Pt 1-5 (Table 2 of 2)
All wind pressures include a load factor of 0.6

Z o n e	Figure	A = 200 ft² psf	A = 500.00 ft² psf	A = 1000 ft² psf
1'	30.3-2A	9.60 -9.70	9.60 -9.60	9.60 -9.60
1	30.3-2A	9.60 -14.02	9.60 -12.31	9.60 -12.31
2	30.3-2A	9.60 -18.68	9.60 -16.48	9.60 -16.48
3	30.3-2A	9.60 -20.88	9.60 -16.48	9.60 -16.48
4	30.3-1	9.60 -10.85	9.60 -9.60	9.60 -9.60
5	30.3-1	9.60 -10.71	9.60 -9.60	9.60 -9.60

10/22/2024 2:36:33 PM

EXTERIOR FACADE FRAMING AND CLADDING

1. All systems (including façade, cladding, components, elements and/or their attachments to the structure) intended for use to enclose the building shall comply with the following criteria for interstory drift as required by ASCE 7 as interpreted or defined herein and as modified or supplemented herein. See Basis of Design section of the General Structural notes for wind loads, deflection limits, and horizontal (story) drift limits.
    A. Systems shall be detailed to accommodate vertical building movement (live load deflection) in conjunction with interstory drift. Interstory drifts should be considered equal in both orthogonal building directions unless noted otherwise.
    B. Systems shall be designed and detailed for elastic (protable) interstory drift such that all systems shall remain intact, undamaged and all sealant joints integral to or placed between systems shall remain intact, uncompromised, without failures or breaches. Joints, jointing and/or joinery shall be designed such that sealant materials flex, compress and/or shear within limits recommended by the sealant manufacturers so as to remain an effective barrier for water and air infiltration.
    C. Systems shall be designed and detailed for inelastic (credible) interstory drift such that no failure or distress occurs to systems except joint sealant is allowed to fail. Under no circumstances shall elements and/or components come in contract with adjacent systems, elements and/or components.
    D. Systems with glazing are intended to keep all members and glazing intact and connected to the building. Glazing shall not break or become dislodged from its restraints. Gaskets may fail and may dislodge but shall not let glass escape its restraint.
    E. Systems shall not apply moments to the slab edges and shall not induce lateral loads into beams unless kicker bracing is supplied. Attachments shall not induce torsional loads into beams and columns, nor loads into braces that are part of the Main Seismic Force Resisting System.
    F. Allowance shall be made for sealant to occupy some finite space when compressed beyond its working limit (suggest ±15% of its static joint width).
2. All system connections shall comply with requirements of ASCE 7 , Chapter 13.
3. All systems shall be coordinated to interface with all adjoining systems such that consistency is maintained throughout the exterior closure regarding the mode (sliding or racking) in which the system performs to meet interstory drift and other design criteria.
4. Systems and details shall be consistent with the architectural intent for joint sizes and system details to the largest extent possible, or where required, modified only after prior approval.

FOUNDATION

1. Soils Report by: ..... Gordon Geotechnical Engineering
2. Report Number & Date: ..... Feb. 28th, 2024 003-053-24
3. Soil Bearing Pressure: ..... 2500 psf, on structural fill or natural soils.
4. Frost Protection: ..... 30 inches minimum
5. Lateral Soil Pressure Fluid Equivalent Density:
    A. Active ..... 35 pcf + 75 psf uniform seismic (retaining walls)
    B. At Rest ..... 55 pcf + 75 psf uniform seismic (rigid foundation walls)
    C. Passive ..... 300 pcf - 75 psf uniform seismic
6. Coefficient of Friction 0.4-0.45

EARTHWORK

1. Consult the project specifications and soils report for further earthwork requirements. In absence of information, refer to the following notes.
2. Clearing: The entire building area shall be scraped to remove the top 4" of soil including all vegetation and debris.
3. Contractor shall provide temporary shoring for excavations as required.
4. Contractor shall provide measures necessary to prevent damage to or settlement of new or existing construction and utilities on or adjacent to project site.
5. Contractor shall provide dewatering as required to protect the site from flooding.
6. Proof rolling: The natural undisturbed soil below all footings shall be proof rolled prior to placing concrete. Remove all soft spots and replace with compacted structural fill.
7. Compacted structural fill: All fill material shall be a well-graded granular material with a maximum size less than 4" and with not more than 10% passing a #200 sieve. Fill beneath footings shall be compacted to 95% of the maximum laboratory density as determined by ASTM D 1557. All fill shall be tested. Compacted structural fill shall be placed in lifts not exceeding 8" in uncompacted thickness.
8. Floor slabs shall be underlain by a granular layer at least 4" thick. The granular layer shall have a maximum size less than 1" with not more than 5% passing a #200 sieve and shall be compacted to at least 90% of the maximum laboratory density as determined by ASTM D 1557.
9. The soils engineer shall review all excavations and fill placement prior to placing concrete.

CONCRETE

Concrete shall be supplied in accordance with ACI 318 and the following requirements:

Concrete Use [a][c]	Comp. Strength f'c (psi)	Exposure Classes per ACI 318 19.3.1 (a,b,c).	Nominal Max. Aggregate Size
Footings	3000	F0, S0, W0, C1	1 1/2"
Foundation Walls	3500	F1, S0, W0, C1	3/4"
Interior Slabs on Grade [d]	4000	F0, S0, W0, C0	3/4"
Exterior Concrete, Reinforced	5000	F3, S0, W0, C2	3/4"
Exterior Concrete, Unreinforced [b]	4500	F3, S0, W0, C0	3/4"

Table Footnotes:

a. Cement type (ASTM C150 or C595), max. watercement ratio and fly ash to comply with ACI 318 Table 19.3.2.1.
b. Air content ± 1.5%, to comply with ACI 318 Tables 19.3.2.1 and 19.3.3.1, initially measured at point of final placement and point of discharge. Subsequent measurements may occur only at point of discharge provided air content is adjusted to account for placement losses. Air content shall be tested in accordance with the use of admixtures, fly ash and aggregate size. Air-entraining admixtures shall comply with ASTM C260 (when used).
c. Calcium chloride shall not be added to the concrete mix. Unreinforced concrete slabs on grade may use calcium chloride as permitted by ACI 318 Table 19.3.2.1.
d. For any exposed slab on grade, the contractor is to notify the engineer of record at least 7 days prior to any pours to discuss the concrete mix design being used as well as present their means and methods of addressing concrete phenomena such as cracking, curling, spalling, etc.
e. Interior slabs on grade shall have a drying shrinkage maximum of 0.040% by ASTM C157 (7-day soak time permitted). Test results shall be submitted with mix designs.
f. For slab on grade 6" or thicker, a maximum aggregate size of 1 1/2" is permitted.
g. These values shall be used for parking slabs on grade or other slabs within the building footprint with exterior exposure to weather. See civil drawings for site concrete requirements.

1. Materials unless noted otherwise:
    A. Normal Weight aggregates ..... ASTM C33
    B. Light Weight aggregates ..... ASTM C330
    C. Fly Ash, Class C or F Pozzolan ..... ASTM C618
    D. Reinforcing Steel
        1. General ..... ASTM A615 Grade 60
        2. Columns, Beams, Shearwalls ..... ASTM A706 Grade 60
        ASTM A615 is permitted if mill certifications are submitted showing that actual yield strength does not exceed the specified strength by more than 18000 psi, the ratio of tensile to yield strength is greater than 1.25, and required minimum elongations of A706 are met.
        3. A706 Grade 80 may be used at the contractor's option. Subject to the above requirements, ASTM A615 Grade 80 steel may be used at the contractor's option, except in special moment frames and special concrete shear walls.
        4. Reinforcement in walls and slabs may be substituted with equivalent ASTM A1064 Grade 80 deformed welded wire reinforcement, subject to EOR approval. Laps per typical schedule.
    E. Deformed Bar Anchors (DBA) ..... ASTM A496
    F. Headed Stud Anchors (HSA) ..... ASTM A108
    G. No aluminum conduit or product containing aluminum or any other material injurious to concrete shall be embedded in concrete.
2. The contractor shall be responsible for the design, detailing, care, placement and removal of all formwork and shores.
    A. Supporting formwork and shoring shall not be removed until structural members have acquired sufficient strength to safely support their own weight and any construction load to which they may be subjected. In no case, however, shall forms and shoring be removed in less than 24 hours after concrete placement.
3. Reinforcement shall have the following concrete clear cover:
    A. Cast-in-place Concrete
        1. Cast against and permanently exposed to earth ..... 3"
        2. Formed concrete exposed to earth or weather:
            #6 thru #18 bars ..... 2"
            #5 and smaller bars ..... 1 1/2"
        3. Concrete not exposed to weather or in contact with ground:
            Slabs, Walls, Joists: #11 bars and smaller ..... 3/4"
            Beams, Columns: Primary Reinforcement, Ties, ... 1 1/2"
            Stirrups, Spirals
4. Construction Joints and Control Joints:
    A. Provide a beveled 2" x 4" x continuous or intermittent keyway in all horizontal and vertical construction joints including between top of footing and foundation walls. In addition, all joints shall be intentionally roughened to a full amplitude of approximately 1/4".
    B. Control joints shall be installed in slabs on grade so the length to width ratio of the slab is no more than 1.25:1. Control joints shall be completed within 12 hours of concrete placement. Control joints may be installed by either:
        1. Saw cut with depth of 1/4 the thickness of the slab
        2. Tooled joints with depth of 1/4 the thickness of the slab
    C. Install control joints in slabs on grade at a spacing not to exceed 30 times the slab thickness in any direction, unless noted otherwise. Construction joints in slabs on grade shall not exceed a distance of 125'-0" on center in any direction.
    D. Install construction joints in walls at a spacing not to exceed 30 times the wall thickness, except in concrete shear walls. For masonry walls above, align joints in concrete walls with masonry control joints.
    E. Construction joints are not permitted in suspended slabs or beams unless specifically noted on the construction documents or submitted by the Contractor to the Engineer of Record for review.
5. Construction
    A. Use chairs or other support devices recommended by the CRSI to support bar and tie reinforcement bars and WWR prior to placing concrete. WWR shall be continuously supported at 36" on center maximum. Reinforcing steel for slabs on grade shall be adequately supported on precast concrete units. Lifting the reinforcing off the grade during placement of concrete is not permitted.
    B. Contractor shall coordinate placement of all openings, curbs, dowels, sleeves, conduits, bolts, inserts and other embedded items prior to concrete placement.
    C. All embeds and dowels shall be securely tied to formwork or to adjacent rebar prior to concrete placement.
    D. No pipes, ducts, sleeves, etc. shall be placed in structural concrete unless specifically detailed or approved by the structural engineer. Penetrations through walls when approved shall be built into the wall prior to concrete placement. Penetrations will not be allowed in footings or grade beams unless detailed. Piping shall be routed around these elements and footings stepped to avoid piping.
    E. Reinforcing bars shall not be welded unless specifically shown on drawings. In such cases, use only AWS standards. Do not substitute reinforcing bars for DBAs or HSAs.
    F. Reinforcing bars shall not be field bent, except as shown in the contract drawings or permitted by the EOR.
    G. Top of concrete columns shall be flush (±1/4") with bottom of supported cast-in-place members.
6. Detailing:
    A. Lap splice lengths shall be detailed to comply with the "Reinforcing Bar Lap Splice Schedule" contained within the contract drawings.
        1. Do not splice vertical bars in stairs and ties. Do not splice vertical bars in retaining walls unless specifically shown.
        2. At shear wall boundary elements lap lengths shall be increased by 25%.
        3. Splices may be made with mechanical splices capable of 125% of yield strength of the bar being spliced (Type 1). Splices located within lateral resisting elements shall also develop the tensile strength of the bar (Type 2). Mechanical splices shall be the positive connecting type coupler and shall meet all ACI requirements. Use "Cadweld", "Lenton" Standard Couplers, "Bar-Lock" or equal with internal protector. If mechanical splices are used, splices or couplers on adjacent bars shall be staggered a minimum of 24" apart along the longitudinal axis of the reinforcing bars.
    B. All 90, 135 and 180° hooks shown graphically in the drawings shall be detailed as ACI standard and seismic hooks, unless noted otherwise.
    C. At joints provide reinforcing dowels to match the member reinforcing, unless noted otherwise.
    D. At all discontinuous control or construction slab on grade joints, provide (2) #4 x 48".
    E. Provide corner bars at intersecting wall corners using the same bar size and spacing as the horizontal wall reinforcing.
    F. At vertical reinforcing shall be doweled to footings, or to the structure below with the same size and spacing as the vertical reinforcing for the element above. Dowels extending into footings shall terminate with a 90° standard hook and shall extend to within 4" of the bottom of the footing. Footing dowels (#6 bars and smaller) with hooks need not extend more than 20" into footings.
    G. See details for reinforcing around miscellaneous openings. All recesses that interrupt reinforcing shall be reinforced the same as an opening.
    H. Reference ACI 315 for additional detailing requirements.
7. Contractor required to submit concrete mix design for review by the engineer prior to any placement of concrete.
8. All concrete shall be mixed and placed per ACI 304. Contractor shall refer to and follow the recommendations in ACI 305R for hot weather concreting and ACI 306R for cold weather concreting.
9. Contractor is not to backfill against retaining walls unless walls have achieved design strength or have been shored. Contractor is not to backfill against basement walls without placement of the main floor diaphragm unless the walls have been shored or approval of the EOR has been granted, or it has been noted otherwise on the design drawings.
10. Construction activity or storage of materials shall not take place on newly placed concrete until the concrete achieves sufficient strength to provide adequate support.

POST-INSTALLED ANCHORS

1. Post-installed anchors shall only be used where specifically detailed or called for on the design drawings. If circumstances arise during construction where the Contractor desires to substitute a post-installed anchor in place of a cast-in-place anchor, the Contractor shall submit a formal written request for each circumstance to the Architect and Engineer for review.
2. Follow all ICC Evaluation Report and manufacturers' requirements and recommendations for post-installed anchor installation. Where conflicts may exist, the most stringent requirement applies.
3. Post-installed anchors that are exposed to exterior conditions, or interior spaces where moisture can accumulate, shall be either galvanized or stainless steel anchors.
4. All holes in hollow, brick, or stone masonry shall be drilled in the "rotary-only" mode with the hammer function off.
5. For installation of adhesive anchors horizontally or vertically inclined, installers must have AM/CRSI Adhesive Anchor Installer Certification or approved equivalent.
6. Adhesive anchors shall be as specified in the Contract Documents. If no specific adhesive is specified, or if a particular product is preferred, the Contractor may submit a request for an adhesive from the following list prior to design of the anchor. Follow manufacturer and ICC evaluation report requirements for installation temperature of adhesive anchors. Adhesive anchors shall not be installed or cured outside of approved temperature ranges. Adhesive anchors may not be installed in concrete less than 21 days old without prior approval.
    A. Eligible adhesive anchors in concrete (normal weight only)
        1. HIT-RE 500-V3 by Hilti (ESR-3814)
        2. HIT-HY 200-V3 by Hilti (ESR-4868)
        3. Kwik-X Dual Action by Hilti (ESR-5065)
        4. SET-3G by Simpson (ESR-4057)
        5. AT-3G by Simpson (ESR-5026)
        6. ET-3G by Simpson (ESR-5334)
        7. Pure 110+ by Dewalt (ESR-3298)
        8. AC200+ Gold by Dewalt (ESR-4027)
    B. Eligible adhesive anchors in grouted masonry
        1. HIT-HY 270 by Hilti (ESR-4143)
        2. AT-XP by Simpson (APMO ES ER-261)
        3. SET-3G by Simpson (ESR-4844). Also approved for ungrouted masonry.
        4. AC100+ Gold by Simpson (ESR-5309)
        5. AC100+ Gold by Dewalt (ESR-3200)
7. Mechanical anchors shall be as specified in the Contract Documents. If no specific mechanical anchor is specified, or if a particular product is preferred, the Contractor may submit a request for an anchor from the following list prior to design of the anchor.
    A. Eligible mechanical anchors in concrete
        1. Kwik Bolt TZ2 by Hilti (ESR-4266)
        2. Kwik HUS-EZ by Hilti (ESR-3027)
        3. HDI-P TZ by Hilti (ESR-4236)
        4. Strong-Bolt 2 by Simpson (ESR-3037)
        5. Titen HD by Simpson (ESR-2713)
        6. Torq-cut by Simpson (ESR-2705)
        7. Trubolt+ by ITW (ESR-3427)
        8. Tapcon/Sammy Anchors by ITW (ESR-2202)
        9. Power-Stud+ SD2 by Dewalt (ESR-2502)
        10. Power-Stud+ SD4 and SD6 Stainless by Dewalt (ESR-2502)
        11. Snake+ by Dewalt (ESR-2272)
        12. Screw-Bolt+ by Dewalt (ESR-3889)
        13. Mini Undercut+ by Dewalt (ESR-3912)
    B. Eligible mechanical anchors in grouted masonry
        1. Kwik Bolt 3 by Hilti (ESR-1385)
        2. Kwik HUS-EZ by Hilti (ESR-3056)
        3. Kwik Bolt TZ2 by Hilti (ESR-4561)
        4. Titen HD by Simpson (ESR-1056)
        5. Strong-Bolt 2 by Simpson (APMO ES ER-0240)
        6. Power-Stud+ SD1 by Dewalt (ESR-2968)
        7. Screwbolt+ by Dewalt (ESR-4042)
8. The Contractor may also submit for review and approval, the manufacturer's ICC evaluation report of alternate anchor systems not listed above. The alternate system shall provide minimum capacities equal to or greater than the specified anchor system. The alternate system shall be approved by the engineer of record prior to the substitution.

MASONRY

1. Materials shall be as follows, unless noted otherwise:
    A. Design strength of all masonry shall be f'm=2000 psi at 28 days, unless noted otherwise.
    B. Concrete Masonry Units (CMU) shall be ASTM C-90, Grade N, Type 1, medium weight (115 pcf) with a minimum unit strength of 2000 psi at 28 days for net area.
    C. Solid Clay Masonry Units shall be ASTM C62, Grade SW, with a minimum compression strength of 3000 psi at 28 days.
    D. Mortar shall be ASTM C270 Portland cement - lime, type "S", with a minimum compression strength of 2000 psi at 28 days. See specifications for additives allowed. Masonry mortars and masonry cements are not allowed. Use type "M" mortar for masonry below grade (2500 psi).
    E. Grout shall be ASTM C476, with a minimum compression strength at least equal to the design strength f'm at 28 days. Limit fly ash to 25% of the total cementitious material. Slump shall be between 8" and 11".
    F. Reinforcing bars shall be ASTM A615, grade 60, (Fy = 60 ksi) except only ASTM A706, grade 60, "low alloy" steel shall be used for reinforcing shown to be welded.
    G. Joint Reinforcing shall be ASTM A951, galvanized, standard class, ladder type with #9 wire per ASTM A82.
    H. Deformed Bar Anchors (DBA) shall be ASTM A496.
    I. Headed Stud Anchors (HSA) shall be ASTM A108.
    J. Anchor Bolts shall be ASTM F1554 Grade 36. Heavy hex nuts shall be ASTM A563.
    K. Mechanical splice couplers shall be ASTM A1034 and shall be capable of developing 125% of the specified yield strength of the bar.
2. Construction Requirements
    A. All masonry construction, workmanship, and materials shall comply with TMS 602/ACI 530.1/ASCE 6, "Specifications for Masonry Structures".
    B. All masonry units shall be stored under cover at the job site. Do not use any frozen materials.
    C. Prior to placing masonry, check with all trades to insure proper placement of openings, block outs, sleeves, curbs, conduits, bolts, inserts, embeds, dowels, etc.
    D. During construction, cover and protect the top of all constructed masonry at the end of each day. No "toothing" or doweling only will be permitted.
    E. All masonry walls, lintels, and columns shall be built with running bond, typical unless noted otherwise.
    F. Mortar joints for all hollow units, both vertical head joints and horizontal bed joints, shall be bedded for a distance at least equal to the thickness of the face shells. The webs each side of cells to be grouted shall be bedded as well. Mortar joints for all solid masonry units, both vertical head joints and horizontal bed joints, shall be fully bedded.
    G. Do not use mortar for grout.
    H. Grout pours shall be limited to 4'-0" in height and shall be placed in accordance with low lift procedures, typical, unless noted otherwise.
    I. Grout pours shall terminate flush with the top of the uppermost unit except at cells with vertical reinforcing where the grout shall be 1-1/2" below the top of the unit to provide a construction key.
    J. Grout shall be consolidated by mechanical vibration during placement and reconsolidated after excess moisture has been absorbed but before workability is lost. Puddling or rodding of grout is not allowed.
    K. Grout solid all cells which contain reinforcing, bolts, anchors, etc., and as otherwise specified. Grout solid all cells below grade. Grout solid all lintels and columns. Do not grout walls solid unless specifically noted as such. Grout solid around all joist and beam bearing pockets after installation of beams and joists, typical, unless noted otherwise.
    L. Vertical cells to be filled with grout shall have vertical alignment sufficient to maintain a clear, unobstructed, vertical cell measuring not less than 2" x 3".
    M. See architectural drawings for locations of control joints. Masonry control joint spacing shall not exceed 26'-0". Corners are to have a control joint on one side of the corner within 2'-0" of the corner. Control joints shall not be over or within 4'-0" of openings. Control joints shall not be placed in masonry columns. If these requirements cannot be satisfied, walls with multiple openings (3'x3' or larger) may have control joint spacing increased to 40'-0" max.
    N. Penetrations shall not be allowed through any masonry lintel, column, pilaster, or jamb without the EOR's prior written approval. Penetrations shall be re-routed as required at these locations. Penetrations through masonry walls shall be built into the wall as the wall is being constructed and shall be reviewed by the EOR prior to installation. Conduits or pipes shall not run in reinforced cells and units without notification and approval by the Engineer of Record.
    O. Masonry walls and columns shall be securely braced until floor and/or roof systems have been installed and are capable of stabilizing the masonry.
    P. Where horizontal reinforcing bars join concrete walls, columns, or pilasters, reinforcing shall be continuous. Also, a key shall be provided between the masonry and the concrete. Fill the key with grout.
    Q. Bolt holes in face or end shells shall have a diameter two inches larger than the bolt diameter and the hole shall be filled with grout.
    R. Post-installed anchor bolts shall only be installed with prior written approval of the EOR. When used, they shall be installed in solid material. Grout solid at cavity locations. All bolt holes to be filled with epoxy shall be wire brushed and cleaned with compressed air per manufacturer's recommendations.
3. Detailing Requirements
    A. Reinforcing steel shall be free of loose flakey rust, scale, grease, oil, dirt, or other deleterious materials which might affect or impair bond.
    B. Minimum grout coverage for reinforcing bars shall be one bar diameter, but not less than ¾". Minimum mortar coverage for joint reinforcing shall be 5/8" from exposed face.
    C. Reinforcing steel shall be placed prior to grouting and shall be placed, positioned, and located according to the structural drawings. It shall be secured against displacement by wire positioners or other suitable devices at intervals not to exceed 200 bar diameters or ten feet, and at all bar splice locations.
    D. Lap all masonry reinforcing per the "Masonry Reinforcing Bar Lap Splice Schedule" in the contract documents. In the absence of this schedule, lap all masonry reinforcing per bar size as follows:
        1. One bar/cell, typical: #3=12", #4=13", #5=20", #6=38", #7=52", #8=72", #9=81".
        2. Two bars/cell, typical: #3=13", #4=22", #5=35", #6=54", #7=63", #8=72" and #9=81".
    E. Vertical reinforcing shall be doweled into the foundation wall, footing, or structure below with the same size bar, spacing, and in same core as the vertical reinforcing in the wall above.
    F. Horizontal reinforcing shall be continuous through masonry walls, columns, and pilasters.
    G. Horizontal reinforcing at masonry control joints shall be continuous through the joint, typical, unless noted otherwise.
    H. Reinforcing bars shall not be field bent, except as shown in the contract drawings or permitted by the EOR.
    I. Walls:
        1. Masonry walls shall be built as an integral unit at corners and intersections. Reinforcing shall be continuous and back-to-back end shells shall be removed at each course.
        2. Vertical reinforcing shall be placed in the center of the wall, typical, unless each face is specified or unless noted otherwise.
        3. Vertical reinforcing shall be provided at each corner and intersection.
        4. Horizontal corner bars shall be provided at all wall intersections and corners. Use same size and spacing as horizontal reinforcing. Provide proper lap lengths.
        5. Horizontal reinforcing shall terminate with a standard hook at the edge of openings and at ends of walls, around the vertical bar.
        6. Horizontal reinforcing shall occur at the top and bottom course of all masonry walls except the bottom course horizontal reinforcing may be omitted when the wall is doweled to a concrete foundation wall below.
    J. Lintels:
        1. Masonry lintels shall be built as an integral part with the support. Masonry units with lintel block ("U" blocks) or one open end ("A" blocks) shall be used in all masonry lintels. Back-to-back end shells are not allowed. Grout all masonry lintels solid for full depth and width shown in the masonry lintel schedule.
        2. Reinforcing shown in the masonry lintel schedule is in addition to standard wall reinforcing.
        3. Horizontal reinforcing bars in the top of the lintel shall be placed in the top 4 inches of the lintel and shall extend a minimum of 72 bar diameters beyond the face of the opening or shall be hooked if required.
        4. Horizontal reinforcing bars in the bottom of the lintel shall be placed in the bottom 4 inches of the lintel and shall extend a minimum of 24 inches beyond the face of the opening or shall be hooked if required.
        5. Vertical reinforcing bars shall hook around the bottom horizontal reinforcing bars. They shall also hook around the top horizontal reinforcing bars or extend into the wall above the lintel a minimum of 48 bar diameters.
        6. Do not splice horizontal top or bottom bars of lintels, typical unless noted otherwise.
        7. For openings not shown, use similar lintel as shown in that wall or type of wall for similar length openings. Verify with the EOR.
        8. Use the following masonry lintel sizes for openings in non-bearing masonry walls.

Width of Opening	Lintel Depth	Horizontal Reinforcing
Up to 4'-0"	16"	(2) #5 bottom
Up to 8'-0"	24"	(2) #5 top and bottom
Up to 10'-0"	32"	(2) #6 top and bottom

        For wider openings contact the EOR. See the masonry lintel schedule for additional information.
    K. Columns/Jambs
        1. All masonry column ties shall terminate with a 135 degree hook plus a 6 bar diameter extension (4" minimum). Horizontal wall reinforcing shall be placed inside the column vertical reinforcing.
        2. Grout jambs solid for full height of wall (floor to floor and/or roof) at sides of openings; one cell for each 4'-0" of span or portion thereof. Reinforce with (2) #5 vertical bars in each grouted cell with one bar placed at each face of wall, typical unless noted otherwise. See contract documents for other reinforcing requirements.
    L. Reinforcing shall not be welded unless specifically noted otherwise. In such cases, use AWS D1.4 standards. Do not substitute bars for DBA's or HSA's.
    M. Epoxy Coated reinforcing shall only be used when specifically noted. Increase lap lengths as required by the IBC and ACI.

MASONRY VENEER

1. Masonry veneer shall be attached to steel stud and wood stud walls with "Hohmann & Barnard HB 213 seismic veneer anchors" (or equal) spaced at 16" on center. Veneer anchors shall be attached to studs with (2) #10 corrosion resistant self-drilling screws and neoprene washers.
2. Masonry veneer shall be attached to reinforced masonry walls with "hi-vod ladur type reinforcement" spaced at a maximum of 16" on center vertically consisting of (3) #6 gauge, galvanized, corrugated, wires. Veneer may also be attached with "Hohmann & Barnard 270 Eye wire" spaced at 16" on center maximum in both vertical and horizontal directions. Anchors shall extend

GENERAL STRUCTURAL NOTES

ABBREVIATIONS

AB	Anchor Bolt
ABV	Above
ALT	Alternate
ARCH	Architect
ADD'L	Additional
@	At
BB	Bottom Bar
BFB	Braced Frame Beam
BFC	Braced Frame Column
BH	Bottom Hook
BLDG	Building
BLKG	Blocking
BLW	Below
BM	Beam
BN	Boundary Nail
BOTT	Bottom
BRB	Bucking Restrained Brace
BRDG	Bridging
BRG	Bearing
BTWN	Between
BYND	Beyond
CANT	Cantilevered
CGS	Center of Gravity of Strand
CJ	Control Joint
CJP	Complete Joint Penetration
CL	Center Line
CMU	Concrete Masonry Unit
COL	Column
CONC	Concrete
CONN	Connection
CONT	Continuous
COORD	Coordinate
CS	Coil Strap
CTR	Center
DB	Deck Bearing
DBA	Deformed Bar Anchor
DBL	Double
DCW	Demand Critical Weld
DET	Detail
DIA	Diameter
DIM	Dimension
DWG	Drawing
(E)	Existing
EA	Each
EF	Each Face
EL	Elevation
ELEC	Electrical
EN	Edge Nail
ENGR	Engineer
EQ	Equal
EQUIP	Equipment
EQ SP	Equally Spaced
EW	Each Way
EJ	Expansion Joint
EXT	Exterior
FLR	Floor
FND	Foundation
FRT	Fire resistance treated
FTG	Footing
ga	Gage
GALV	Galvanized
GLB	Glued Laminated Beam
GSN	General Structural Notes
GT	Girder Truss
HD	Hold-down
HK	Hook
HORIZ	Horizontal
HSA	Headed Stud Anchor
HSS	Hollow Structural Section
IBC	International Building Code
ICC	International Code Council
INT	Interior
JST	Joist
K	Kip(s) = 1000 Pounds
KLF	Kips Per Lineal Foot
KSF	Kips Per Square Foot
LB	Pounds (#)
LOC	Location
MAS	Masonry
MAX	Maximum
MECH	Mechanical
MEZZ	Mezzanine
MFB	Moment Frame Beam
MFC	Moment Frame Column
MFR	Manufacturer
MIN	Minimum
MISC	Miscellaneous
MTL	Metal
NTS	Not To Scale
NS	Non-shrink
oc	On Center
OPNG	Opening
OPP	Opposite
OSB	Oriented Strand Board
PAF	Power Actuated Fastener
PCF	Pounds per Cubic Foot
PEN	Penetrate or Penetration
PERP	Perpendicular
PFT	Pre-Fabricated Truss
PJP	Partial Joint Penetrain
PL	Plate
PLF	Pounds per Lineal Foot
PREFAB	Prefabricated
PSF	Pounds per Square Foot
PSI	Pounds per Square Inch
REINF	Reinforce
REQD	Required
RTU	Roof Top Unit
SB	Shear Bars/Hairpins (135°/90° HK)
SCHED	Schedule
SFRS	Seismic Force Resisting System
SHTG	Sheathing
SIM	Similar
SN	Sill Nail
SOG	Slab on Grade
STD	Standard
STIFF	Stiffener
STL	Steel
STRUCT	Structural
SW	Shear Wall
T&B	Top and Bottom
T&G	Tongue and Groove
TB	Top Bar
TEMP	Temperature
TH	Top Hook
THRU	Through
T/	Top of
TYP	Typical
UNO	Unless Noted Otherwise
VERT	Vertical
W/	With
WWR	Welded Wire Reinforcement
WP	Working Point

Typically our sheets are organized as follows:

SHEET SERIES	DESCRIPTION
S-0XX	General Notes, Specifications and Loading Plans
S-1XX	Plan Sheets
S-2XX	Elevations
S-3XX	Building Sections
S-4XX	Enlarged Plans & Vertical Circulation (stairs & elevators) and Details
S-5XX	Foundation Details
S-6XX	Floor Details
S-7XX	Roof Details
S-8XX	Schedules
S-9XX	Isometrics, 3D views, Renderings

DEFERRED SUBMITTALS

1. Deferred submittals are items that are not part of our scope which require architectural and/or engineering review. Deferred submittals include plans, details, calculations and/or other relevant design information stamped by a Professional Engineer licensed in the state in which construction will occur.
2. Deferred submittals shall first be submitted to the project architect and/or engineer for review and coordination. Upon completion of the architect/engineer review, the architect/engineer will submit the deferred submittals to the Building Official for review and approval. The submittal to the Building Official shall include a notation stating that the architect/engineer review has been performed and that the plans and calculations for the deferred submittal items are found to be in general conformance with the design drawings with no exceptions.
3. Construction related to deferred submittals shall not commence until the Building Official has approved the submittal. Approved deferred submittals shall be available at the jobsite throughout construction.
4. Items requiring deferred submittals are listed below. These items shall be designed and fabricated by the manufacturer according to specifications given in the construction documents.
   A. Open Web Steel Roof Joists and Girders (by steel joist manufacturer)
   B. Seismic Bracing for mechanical, electrical and plumbing components, and for fire protection components per ASCE 7, Chapter 13 (by MEP consultant)

SPECIAL INSPECTION, TESTING AND STRUCTURAL OBSERVATION REQUIREMENTS

1. Special Inspections and Testing
   A. Special inspections and testing as required per the approved construction documents and per IBC Chapter 17 shall be provided for this project unless waived by the Building Official.
   B. An independent agency, or agencies, employed by the Owner, shall perform the special inspection and testing services required.
   C. The special inspection and testing requirements of this section of the General Structural Notes and the special inspection tables serve as the Engineer of Record's statement of special inspections and structural observations required by IBC Chapter 17.
2. Contractor Responsibilities (1704.4)
   A. Each Contractor responsible for the construction of a main wind or seismic force-resisting system, a designated seismic system, or a wind or seismic force-resisting component listed in the statement of special inspections shall submit a written statement of responsibility to the Building Official and Owner prior to commencing with the work involved. It shall contain acknowledgement of awareness of the special requirements contained in the statement of special inspection.
   B. The Contractor shall coordinate and cooperate with all the required inspections, testing, and/or structural observations required for the project.
   C. The Contractor shall maintain access to and exposure of the work which requires special inspection or testing.
   D. The Contractor shall not proceed with subsequent work until required inspections, testing, and/or structural observations have been provided.
   E. The Contractor shall correct all work found to be deficient, and re-test at no additional cost to the Owner.
   F. The Contractor shall notify the Engineer of Record at least (7) days prior to any required structural observations.
   G. Submit all required documentation to the Special Inspector for review.
3. Special Inspector Responsibilities (1704.2)
   A. Prior to the start of the construction, each approved agency shall provide written documentation to the Building Official, demonstrating the competence and relevant experience or training of the special inspectors who will perform the special inspections and tests during construction.
   B. Special Inspectors shall keep records of their inspections and testing.
   C. Inspection reports shall indicate whether the work inspected was or was not completed in conformance to the approved construction documents.
   D. Non-conforming work and/or discrepancies shall be brought to the Contractor's immediate attention for correction.
   E. The Special Inspector shall notify the Architect/Engineer of any non-conforming work or discrepancies that the Contractor cannot readily correct.
   F. Any uncorrected non-conforming work or discrepancies shall be brought to the attention of the Architect/Engineer and the Building Official prior to completion of that phase of the work.
   G. Submit the following to the Building Official:
      1. Special Inspections and Testing Reports.
      2. Certificates of Compliance for:
         a. Fabrication of structural elements from approved fabricators.
         b. The seismic qualifications of nonstructural components, supports, and attachments.
         c. Designated Seismic Systems.
         d. Open-web steel joists and joist girders.
      3. Reports of:
         a. Pre-construction tests for shotcrete.
         b. Material properties verifying compliance with the requirements of AWS D1.4 for weldability for reinforcing bars other than ASTM A706.
         c. Mill tests for ASTM A615 reinforcing bars used to resist earthquake induced forces in special moment frames, special structural walls or coupling beams in structures assigned to Seismic Design Category B, C, D, E, or F.
4. Special Inspections (1705)
   A. Special Cases (1705.1.1): Special Inspection and tests shall be required for proposed work that is, in the opinion of the Building Official, unusual in its nature, such as, but not limited to, the following:
      1. Construction materials and systems that are alternatives to materials and systems prescribed by the IBC.
      2. Unusual design applications of materials described in the IBC.
      3. Materials and systems required to be installed in accordance with additional manufacturer's instructions that prescribe requirements not contained in the IBC or in standards referenced by the IBC.
   B. Steel Construction (1705.2): The special inspections and nondestructive testing of steel construction in buildings shall be in accordance with the following:
      1. Structural Steel. Special inspections and non-destructive testing of structural steel elements in buildings, structures, and portions thereof shall be in accordance with the Quality Assurance inspection requirements of AISC 360 and tables in the construction documents. Exception: Railing systems composed of structural steel elements shall be limited to welding inspection of welds at the base of cantilevered rail posts.
      2. Cold-Formed Steel Deck. Special inspections and qualification of welding special inspectors for cold-formed steel floor and roof deck shall be in accordance with the Quality Assurance inspection requirements of SDI-QA/QC.
      3. Open-Web Steel Joists and Joist Girders. Special inspections of open-web steel joists and joist girders in buildings, structures, and portions thereof shall be in accordance with Table 1705.2.3 in the construction documents.
   C. Quality Control Submittals for Structural Steel
      1. Provide Level III non-destructive testing (NDT) personnel certifications.
      2. Provide welder qualification records to verify project welders are tested and qualified in accordance with AWS D1.1 before welding structural or miscellaneous steels, D1.3 before welding sheet steels (10 gauge and thinner), and D1.4 before welding reinforcing steel. Submit documentation to the approved inspection agency for review before welding.
      3. Provide welder identification methodology. The fabricator/erector shall maintain a system by which the welder who has welded a joint or member can be identified. Stamps, if used, shall be the low stress type.
      4. Provide welding procedures that comply with AWS D1.1, D1.3, D1.4, D1.8, as required by the project. Welding procedures shall be made available to welders and inspectors.
         a. Provide weld filler metal product data sheets identifying optimum welding parameters and storage conditions with each welding procedure submittal.
      5. Provide bolt storage and installation procedures to the approved inspection agency for review.
   D. Structural Steel Non-Destructive Testing (NDT) Personnel Qualifications
      1. NDT personnel will:
         a. Qualify in accordance with the recommended practices of the American Society of Nondestructive Testing, SNT-TC-1A, latest edition.
         b. Pass eye examinations meeting: (1) ASTM requirements at least once a year, and (2) AWS D1.1 every three years.
         c. Be certified in accordance with the AWS QC-1, latest edition.
         d. Level III must be qualified by ASNT testing in the applicable method under review.
      2. Only Level II and Level III technicians, qualified by testing in the applicable method, are permitted to interpret nondestructive testing results.
      3. Only Senior Certified or Certified Welding Inspectors (SCWI, CWI) are permitted to evaluate welds. Certified Associate Welding Inspectors may evaluate welds when under the direct supervision of a SCWI and/or CWI.
      4. Approved Inspection Agency will certify the following:
         a. Level III inspector has reviewed the NDT procedures.
   E. Structural Steel: Special inspection and non-destructive testing (NDT) are required during the fabrication and erection of any load-bearing members and assemblies. Special inspection, except NDT, may be waived when the work is performed in a fabricating shop, or by an erector approved by the Building Official to perform work without Special Inspection. NDT of welds completed in an approved fabricator's shop may be performed by the fabricator when approved by the Building Official. When the fabricator performs the NDT, the fabricator shall submit the NDT reports for review by the Special Inspector. Special inspection and NDT shall be provided per the special inspection tables for structural steel in the construction documents.
      1. Perform all welding and welding special inspection activities in accordance with AWS D1.1, D1.3, D1.4, and D1.8, AISC 360 Chapter N, and AISC 341 Chapter J, as appropriate for the material form and welding methods employed. Approved methods and acceptance criteria are established in these codes.
      2. Perform all bolting and bolting inspection activities in accordance with AISC Specification for Structural Structural Joints Using High Strength Bolts, AISC 360 Chapter N, and AISC 341 Chapter J, as applicable.
      3. Non-Destructive Testing (NDT) of welds is required as follows:
         a. Ultrasonic testing (UT), magnetic particle testing (MT), penetrant testing (PT), and radiographic testing (RT), where required, shall be performed in accordance with AWS D1.1/D1.1M. Acceptance criteria shall be in accordance with AWS D1.1/D1.1M for statically loaded structures, unless otherwise designated on the design drawings or project specifications.
         b. All NDT shall be documented. NDT reports shall be distributed to the fabricator/erector, the Building Official, the Contractor, and the Architect.
         c. Amount of NDT is permitted to be reduced according to AISC 360 Chapter N and AISC 341 Chapter J if appropriate criteria are met, and if approved by the Building Official and the Engineer of Record.
         d. Requirements for structures in Seismic Design Categories C thru F:
            - Ultrasonic test all complete joint penetration groove
            - Magnetic particle test or penetrant test all thermally cut surfaces of access holes for flange or web thicknesses exceeding 2". Magnetic particle test or penetrant test all thermally cut surfaces of beam copes access holes for flange or web thicknesses exceeding 1 ½" for members of the seismic force resisting system in Seismic Design Categories C thru F. Any crack shall be deemed unacceptable.
      4. Special inspections and Testing for Non-Shrink Grout are required as follows:
         a. Periodic special inspection verifying the use of required mix design.
         b. Samples of non-shrink grout shall be tested for compressive strength at least daily, with additional tests required for each additional 10 bags mixed per day.
   F. Concrete (1705.3): Special inspections and tests of concrete construction shall be performed in accordance with Table 1705.3 in the construction documents.
      1. Special inspections of welding of and qualifications of special inspectors for reinforcing bars shall be in accordance with the requirements of AWS D1.4 for special inspections and for special inspector qualifications.
      2. In the absence of sufficient data or documentation providing evidence of conformance to quality standards for concrete materials, the building official shall require testing in accordance with the appropriate standards and criteria for the material in Ch. 19&20 of ACI 318.
   G. Masonry (1705.4): Special inspections and tests of masonry construction shall be performed in accordance with the Quality Assurance program requirements of TMS 402 and TMS 602.
      1. Engineered masonry construction in Risk Categories I, II and III shall be special inspected per TMS 602, Level 2, Quality Assurance and Tables 3 and 4 in the construction documents.
      2. Special inspections and tests shall not be required for:
         a. Empirically designed masonry, glass unit masonry or masonry veneer designed in accordance with Section 2109, Section 2110 or Chapter 14, respectively, where they are part of a structure classified as Risk Category I, II or III.
         b. Masonry foundation walls constructed in accordance with Table 1807.1.6.3(1), 1807.1.6.3(2), 1807.1.6.3(3) or 1807.1.6.3(4).
         c. Masonry fireplaces, masonry heaters or masonry chimneys installed or constructed in accordance with Section 2111, 2112 or 2113, respectively.
      3. Special inspections and tests for glass unit masonry or masonry veneer designed in accordance with Section 2110 or Chapter 14, respectively, where they are part of a structure classified as Risk Category IV shall be performed in accordance with TMS 602 Level 2 and Tables 3 and 4 in the construction documents.
   H. Soils (1705.6): Special inspections and tests of existing site soil conditions, fill placement and load-bearing requirements shall be performed in accordance with this section and Table 1705.6 in the construction documents. The approved geotechnical report and the construction documents shall be used to determine compliance.
   I. Fabricated Items (1705.11): Where fabrication of structural, load bearing or lateral load-resisting members or assemblies is being conducted on the premises of a fabricator's shop, special inspections of the fabricated items shall be performed during fabrication. Special inspections during fabrication are not required where the work is done on the premises of a fabricator registered and approved by the building official to perform such work without special inspection. Approval shall be based on review of the fabricator's written fabrication procedures and quality control manuals that provide a basis for control of materials and workmanship, with periodic auditing of fabrication and quality control practices by an approved agency or the building official. At the completion of fabrication, the approved fabricators shall submit a certificate of compliance to the Owner for submittal to the Building Official stating that the work was performed in accordance with the approved construction documents.
   J. See architectural drawings for additional required inspections pertaining to sprayed fire-resistant materials (1705.15), mastic and intumescent fire-resistant coatings (1705.16), EIFS (1705.17), fire resistant penetrations and joints (1705.18), or smoke control systems (1705.19).
   K. Post-Installed Anchors: Special inspections and tests shall be performed during installation of post-installed anchors according to the requirements of the ICC Evaluation Report and table 1705.3 in the construction documents.
5. Special Inspections for Wind Resistance (1705.12): Special inspections for wind resistance are not required for this project per IBC Section 1705.12.
6. Special Inspections for Seismic Resistance (1705.13): Special inspections for seismic resistance are required for this project per IBC section 1705.13.
   A. Structural Steel (1705.13.1): Special Inspections for seismic resistance shall be in accordance with the following as applicable:
      1. Seismic Force-Resisting Systems; Special Inspections of structural steel in the seismic force-resisting systems of buildings and structures assigned to Seismic Design Category B, C, D, E, or F shall be performed in accordance with the Quality Assurance requirements of AISC 341 and the construction documents.
      2. Structural Steel Elements; Special Inspections of structural steel elements in the seismic force-resisting systems of buildings and structures assigned to Seismic Design Category B, C, D, E, or F other than those covered in section5.A.1 above, including struts, collectors, chords, and foundation elements, shall be performed in accordance with the Quality Assurance requirements of AISC 341 and the construction documents.
      3. the seismic force-resisting system, where the lateral resistance is provided by structural sheathing and the specified fastener spacing is more than 4" on center.
   B. Cold-Formed Steel Light-Frame Construction (1705.13.3): For the seismic force-resisting systems of structures assigned to Seismic Design Category C, D, E, or F, periodic special inspection shall be required for both:
      1. Welding operations of elements of the seismic force-resisting system.
      2. Screw attachment, bolting, anchoring and other fastening of elements of the seismic force-resisting system, including shear walls, braces, diaphragms, collectors (drag struts), and hold-downs.
         Exception: Special inspections are not required for cold-formed steel light-frame shear walls and diaphragms, including screw installation, bolting, anchoring and other fastening to components of the seismic force-resisting system, where either of the following applies:
         a. The sheathing is gypsum board or fiberboard.
         b. The sheathing is wood structural panel or steel sheets on only one side of the shear wall, shear panel or diaphragm assembly and the specified fastener spacing at the panel or sheet edge is more than 4" on center.
   C. Designated Seismic Systems (1705.13.4): For structures assigned to Seismic Design Category C, D, E, or F, the Special Inspector shall examine designated seismic systems requiring seismic qualifications in accordance with ASCE7 Section 13.2.2, and verify that label, anchorage and mounting conforms to the certificate of compliance.
   D. Architectural Components (1705.13.5): Periodic special inspection is required for the erection and fastening of exterior cladding, interior and exterior nonbearing walls and interior and exterior veneer in structures assigned to Seismic Design Category D, E, or F.
   E. Plumbing, Mechanical, and Electrical Components (1705.13.6): Periodic special inspection of plumbing, mechanical, and electrical components shall be required for the following:
      1. Anchorage of electrical equipment for emergency and standby power systems in structures assigned to Seismic Design Category C, D, E, or F.
      2. Anchorage of other electrical equipment is structures assigned to Seismic Design Category E or F.
      3. Installation and anchorage of piping systems designed to carry hazardous materials and their associated mechanical units in structures assigned to Seismic Design Category C, D, E, or F.
      4. Installation and anchorage of ductwork designed to carry hazardous materials in structures assigned to Seismic Design Category C, D, E, or F.
      5. Installation and anchorage of vibration isolated systems in structures assigned to Seismic Design Category C, D, E, or F where the approved construction documents require a nominal clearance of 1/4" or less between the equipment support frame and restraint.
      6. Installation of mechanical and electrical equipment, including duct work, piping systems, and their structural supports, where automatic fire sprinkler systems are installed in structures assigned to Seismic Design Category C, D, E, or F to verify minimum clearances have been maintained. Where flexible sprinkler hose fittings are used, special inspection of minimum clearances is not required.
   F. Seismic Isolation Systems (1705.13.8): Periodic special inspection shall be provided for seismic isolation systems in seismically isolated structures assigned to Seismic Design Category B, C, D, E, or F during the fabrication and installation of isolator units and energy dissipation devices.
7. Testing for Seismic Resistance (1705.14): Testing for seismic resistance is required for this project per IBC section 1705.14.
   A. Structural Steel (1705.14.1):
      1. Seismic Force-resisting Systems. Non-destructive testing of structural steel in the seismic force-resisting systems of structures assigned to Seismic Design Category B, C, D, E, or F shall be performed in accordance with the Quality Assurance requirements of AISC 341.
      2. Structural Steel Elements other than SFRS elements (struts, collectors, chords, foundation elements). Non-destructive testing of structural steel elements other than those of the seismic force-resisting systems of structures assigned to Seismic Design Category B, C, D, E, or F shall be performed in accordance with the Quality Assurance requirements of AISC 341.
   B. Non-Structural Components (1705.14.2): For structures assigned to Seismic Design Category B, C, D, E, or F where the requirements of ASCE 7 Section 13.2.1 for nonstructural components, supports or attachments are met by seismic qualification as specified in Item #2 therein, the registered design professional of the applicable discipline shall specify on the approved construction documents the requirements for seismic qualification by analysis, testing, or experience-data. Certificates of Compliance for the seismic qualification shall be submitted to the Building Official.
   C. Designated Seismic Systems (1705.14.3): For structures assigned to Seismic Design Category C, D, E, or F and with designated seismic systems that are subject to the requirements of ASCE 7 Section 13.2.2 for certification, the registered design professional of the applicable discipline shall specify on the approved contract documents the requirements to be met by analysis, testing, or experience data as specified therein. Certificates of Compliance documenting that the requirements are met shall be submitted to the Building Official.
8. Structural Observations/Site Observations (1704.6): Structural observations are required for this project per IBC section 1704.6.
   A. The Engineer of Record or his representative shall perform the structural observations as required.
   B. A registered design professional employed by the Owner shall perform the structural observations as required.
   C. Structural Observations of the following stages of construction shall be provided. The Contractor shall notify (in writing) the [EOR/design professional] performing the structural observations at least 7 days prior to the following stages of construction so that they may have the opportunity to review the work. At the conclusion of the work, a site observation report will be provided stating that the site visits have been made and report any unresolved deficiencies.
      1. Initial placing of any concrete, including but not limited to: footings, slabs on grade or concrete over steel deck
      2. Initial grout pours for masonry walls
      3. Initial erection of structural steel
      4. Completion of structural roof deck
   D. Site Observations are part of the Dunn Associates, Inc. contract with the Architect/Owner. The stages of construction listed below will serve as suggested stages of construction to be observed. The Contractor shall notify (in writing) the Engineer of Record at least 7 days prior to the following stages of construction so that the Engineer may have the opportunity to review the work.
      1. Initial placing of any concrete, including but not limited to: footings, slabs on grade or concrete over steel deck
      2. Initial grout pours for masonry walls
      3. Initial erection of structural steel
      4. Completion of structural roof deck
   E. Structural observation/Site observation reports will be provided to the Architect. Distribution to the Contractor, Owner, and/or Building Official will be through the Architect.
9. Seismic/Wind Main Force Resisting Systems That Require Special Inspections
   A. Masonry Shear Walls
   B. Steel Moment Frames
   C. Metal Roof Deck Diaphragms

CRSA

PROJECT **240104**

BID PACKAGE #1 2024-08-26

REVISIONS

NO.	DATE	DESCRIPTION
1	10/16/2024	ADD-02

REVIEWED FOR CODE COMPLIANCE
Thomas W Peterson
10/28/2024
DIVISION OF FACILITIES CONSTRUCTION AND MANAGEMENT

DTC WELDING TECH & FABRICATION BUILDING
355 SOUTH 650 EAST
KAYSVILLE, UT 84037

DAVISTECH
DAVIS TECHNICAL COLLEGE

LICENSED PROFESSIONAL STRUCTURAL ENGINEER GREGORY S. DUNN 08/28/2024 9027257 STATE OF UTAH

2024-08-26
BID PACKAGE #1

NOTE:
THESE STRUCTURAL DRAWINGS ARE BASED ON ARCHITECTURAL DRAWINGS DATED July 23, 2024

DIMENSIONS AND ELEVATIONS, AS THEY RELATE TO THE BUILDING IN GENERAL i.e. GRID TO GRID DIMENSIONS OR DECK BEARING ELEVATIONS, ARE SUPPLIED BY THE ARCHITECT. THEY ARE PROVIDED ON THE STRUCTURAL PLANS AND DETAILS FOR THE CONVENIENCE OF THE CONTRACTOR. VERIFY DIMENSIONS AND ELEVATIONS WITH ARCHITECTURAL DRAWINGS.

GENERAL STRUCTURAL NOTES
SE002.1

(801) 355-5915

9/27/2024 11:23:26 AM

TABLE 1705.6: REQUIRED SPECIAL INSPECTIONS AND TESTS OF SOILS

TYPE	CONTINUOUS SPECIAL INSPECTION	PERIODIC SPECIAL INSPECTION
1. Verify materials below shallow foundations are adequate to achieve the design bearing capacity.	-	X
2. Verify excavations are extended to proper depth and have reached proper material.	-	X
3. Perform classification and testing of compacted fill materials.	-	X
4. During fill placement, verify use of proper materials and procedures in accordance with the provisions of the approved geotechnical report. Verify densities and lift thicknesses during placement and compaction of compacted fill.	X	-
5. Prior to placement of compacted fill, inspect subgrade and verify that site has been prepared properly.	-	X

TABLE 1705.3: REQUIRED SPECIAL INSPECTIONS AND TESTS OF CONCRETE CONSTRUCTION

TYPE	CONTINUOUS SPECIAL INSPECTION	PERIODIC SPECIAL INSPECTION	REFERENCED STANDARD[a]	IBC REFERENCE
1. Inspect reinforcement , including prestressing tendons, and verify placement	-	X	ACI 318 Ch. 20, 25.2, 25.3, 26.6.1-26.6.3	-
2. Reinforcing bar welding			AWS D1.4 ACI 318: 26.6.4	-
a. Verify weldability of reinforcing bars other than ASTM A 706;	-	X		
b. Inspect single-pass fillet welds, maximum 5/16"; and	-	X		
c. inspect all other welds	X	-		
3. Inspect anchors cast in concrete.	-	X	ACI 318; 17.8.2	-
4. Inspect anchors post-installed in hardened concrete members[b]				
a. Adhesive anchors installed in horizontally or upwardly inclined orientations to resist sustained tension loads	X	-	ACI 318: 17.8.2.4	
b. Mechanical anchors and adhesive anchors not defined in 4.a.	-	X	ACI 318: 17.8.2	
5. Verify use of required design mix.	-	X	ACI 318: Ch 19, 26.4.3, 26.4.4	1904.1, 1904.2
6. Prior to concrete placement, fabricate specimens for strength tests, perform slump and air content tests, and determine the temperature of the concrete.	X	-	ASTM C31 ASTM C172 ACI 318: 26.5, 26.12	-
7. Inspect concrete and shotcrete placement for proper application techniques.	X	-	ACI 318: 26.5	-
8. Verify maintenance of specified curing temperature and techniques.	-	X	ACI 318: 26.5.3-26.5.5	-
9. Inspect formwork for shape, location and dimensions of the concrete member being formed.	-	X	ACI 318: 26.11.1.2(b)	-

For SI: 1 inch = 25.4 mm.
a. Where applicable, see Section 1705.12. Special inspection for seismic resistance.
b. Specific requirements for special inspection shall be included in the research report for the anchor issued by an approved source in accordance with 17.8.2 in ACI 318, or other qualification procedures. Where specific requirements are not provided, special inspection requirements shall be specified by the registered design professional and shall be approved by the building official prior to the commencement of the work.

TABLE 1705.2.3: REQUIRED SPECIAL INSPECTIONS OF OPEN-WEB STEEL JOISTS AND JOIST GIRDERS

TYPE	CONTINUOUS SPECIAL INSPECTION	PERIODIC SPECIAL INSPECTION	REFERENCED STANDARD
1. Installation of open-web steel joists and joist girders			
a. End connections - welding or bolted.	-	X	SJI specifications listed in Section 2207.1.
b. Bridging - horizontal or diagonal.	-	-	-
1. Standard bridging	-	X	SJI specifications listed in Section 2207.1.
2. Bridging that differs from the SJI specifications listed in Section 2207.1.	-	X	-

For SI: 1" = 25.4mm
a.Where applicable, see Section 1705.13.

DEFINITION OF INSPECTION TASK ABBREVIATIONS

O	Observe: The inspector shall observe these items on a random, daily basis. Operations need not be delayed pending these inspections.
P	Perform: These inspections shall be performed for each item prior to final acceptance.
D	Document: The inspector shall prepare reports indicating that the work has been performed in accordance with the contract documents. The report need not provide detailed measurements for joint fit-up, WPS settings, completed welds, or other individual items listed in the tables. For shop fabrication, the report shall indicate the piece mark of the piece inspected. For field work, the report shall indicate the reference grid lines and floor or elevation inspected. Work not in compliance with the contract documents and whether the noncompliance has been satisfactorily repaired shall be noted in the inspection report.

TABLE N5.4-1 COMBINED WITH TABLE J6-1 INSPECTION TASKS PRIOR TO WELDING

AISC 360	AISC 341	VISUAL INSPECTION TASKS PRIOR TO WELDING	QC TASK	QC DOC.	QA TASK	QA DOC.
•		Welder qualification records and continuity records	P	-	O	-
•		Welding procedure specification (WPSs) available	P	-	P	-
•		Manufacturer certification for welding consumables available	P	-	P	-
•	•	Material identification (type/grade)	O	-	O	-
•	•	Welder identification system [a]	O	-	O	-
•	•	Fit-up of groove welds (including joint geometry) • Joint preparation • Dimensions (alignment, root opening, root face, bevel) • Cleanliness (condition of steel surfaces) • Tacking (tack weld quality and location) • Backing type and fit (if applicable)	P/O**	-	O	-
•		Fit-up of CJP groove welds of HSS T-, Y-, and K-joints without backing (including joint geometry) • Joint preparation • Dimensions (alignment, root opening, root face, bevel) • Cleanliness (condition of steel surfaces) • Tacking (tack weld quality and location)	P	-	O	-
•	•	Configuration and finish of access holes	O	-	O	-
•	•	Fit-up of fillet welds • Dimensions (alignment, gaps at root) • Cleanliness (condition of steel surfaces) • Tacking (tack weld quality and location)	P/O**	-	O	-
•		Check welding equipment	O	-	O	-

[a]The fabricator or erector, as applicable, shall maintain a system by which a welder who has welded a joint or member can be identified, Stamps, if used, shall be low stress type.

** Follow performance of this inspection task for ten welds to be made by a given welder, with the welder demonstrating understanding of requirements and possession of skills and tools to verify these items, the Perform designation of this task shall be reduced to Observe, and the welder shall perform this task. Should the inspector determine that the welder has discontinued performance of this task, the task shall be returned to Perform until such time as the inspector has re-established adequate assurance that the welder will perform the inspection tasks listed.

TABLE N5.6-1 COMBINED WITH TABLE J7-1 INSPECTION TASKS PRIOR TO BOLTING

AISC 360	AISC 341	VISUAL INSPECTION TASKS PRIOR TO BOLTING	QC TASK	QC DOC.	QA TASK	QA DOC.
•		Manufacturer's certifications available for fastener materials	O	-	P	-
•		Fasteners marked in accordance with ASTM requirements	O	-	O	-
•	•	Correct fasteners selected for the joint detail (grade, type, bolt length if threads are to be excluded from shear plane)	O	-	O	-
•	•	Correct bolting procedure selected for joint detail	O	-	O	-
•	•	Connecting elements, including the appropriate faying surface condition and hole preparation, if specified, meet applicable requirements	O	-	O	-
•	•	Pre-installation verification testing by installation personnel observed and documented for fastener assemblies and methods used	P	D	O	D
•	•	Proper storage provided for bolts, nuts, washers and other fastener components	O	-	O	-

TABLE J9-1 INSPECTION OF COMPOSITE STRUCTURES PRIOR TO CONCRETE PLACEMENT

INSPECTION OF COMPOSITE STRUCTURES PRIOR TO CONCRETE PLACEMENT	QC TASK	QC DOC.	QA TASK	QA DOC.
Material identification of reinforcing steel (Type/Grade)	O	-	O	-
Determination of carbon equivalent for reinforcing steel other than ASTM A706	O	-	O	-
Proper reinforcing steel size, spacing and orientation	O	-	O	-
Reinforcing steel has not been rebent in the field	O	-	O	-
Reinforcing steel has been tied and supported as required	O	-	O	-
Required reinforcing steel clearances have been provided	O	-	O	-
Composite member has required size	O	-	O	-

TABLE 4: MASONRY MINIMUM SPECIAL INSPECTION REQUIREMENTS

MINIMUM SPECIAL INSPECTION					
INSPECTION TASK	FREQUENCY[(a)]			REFERENCE FOR CRITERIA	
	LEVEL 1	LEVEL 2	LEVEL 3	TMS 402	TMS 602
1. As masonry construction begins, verify that the following are in compliance:					
a. Proportions of site-prepared mortar	NR	P	P		Art. 2.1, 2.6 A, & 2.6 C
b. Grade and size of prestressing tendons and anchorages	NR	P	P		Art. 2.4 B & 2.4 H
c. Grade, type and size of reinforcement, connectors, anchor bolts, and prestressing tendons and anchorages	NR	P	P		Art. 3.4 & 3.6 A
d. Prestressing technique	NR	P	P		Art. 3.6 B
e. Properties of thin-bed mortar for AAC masonry	NR	C[(b)]/P[(c)]	C		Art. 2.1 C.1
f. Sample panel construction	NR	P	C		Art. 1.6 D
2. Prior to grouting, verify that the following are in compliance:					
a. Grout space	NR	P	C		Art. 3.2 D & 3.2 F
b. Placement of prestressing tendons and anchorages	NR	P	P	Sec. 10.8 & 10.9	Art. 2.4 & 3.6
c. Placement of reinforcement, connectors, and anchor bolts	NR	P	C	Sec. 6.1, 6.3.1, 6.3.6, & 6.3.7	Art. 3.2 E & 3.4
d. Proportions of site-prepared grout and prestressing grout for bonded tendons	NR	P	P		Art. 2.6 B & 2.4 G.1.b
3. Verify compliance of the following during construction:					
a. Materials and procedures with the approved submittals	NR	P	P		Art. 1.5
b. Placement of masonry untis and mortar joint construction	NR	P	P		Art. 3.3 B
c. Size and location of structural members	NR	P	P		Art. 3.3 F
d. Type, size, and location of anchors, including other details of anchorage of masonry to structural members, frames, or other construction	NR	P	C	Sec. 1.2.1(e), 6.2.1, & 6.3.1	
e. Welding of reinforcement	NR	C	C	Sec. 6.1.6.1.2	
f. Preparation, construction, and protection of masonry during cold weather (temperature below 40°F (4.4°C)) or hot weather (temperature above 90°F (32.2°C))	NR	P	P		Art. 1.8 C & 1.8 D
g. Application and measurement of prestressing force	NR	C	C		Art. 3.6 B
h. Placement of grout and prestressing grout for bonded tendons is in compliance	NR	C	C		Art. 3.5 & 3.6 C
i. Placement of AAC masonry units and construction of thin-bed mortar joints	NR	C[(b)]/P[(c)]	C		Art. 3.3 B.9 & 3.3F.1.b
4. Observe preparation of grout specimens, mortar specimens, and/or prisms	NR	P	C		Art. 1.4 B.2.a.3, 1.4 B.2.b.3, 1.4 B.2.c.3, 1.4 B.3 & 1.4 B.4

(a) Frequency refers to the frequency of inspection, which may be continuous during the listed task or periodically during the listed task, as defined in the table.
NR=Not Required, P=Periodic, C=Continuous
(b) Required for the first 5000 square feet (465 square meters) of AAC masonry.
(c) Required after the first 5000 square feet (465 square meters) of AAC masonry.

TABLE N5.4-2 COMBINED WITH TABLE J6-2 VISUAL INSPECTION TASKS DURING WELDING

AISC 360	AISC 341	VISUAL INSPECTION TASKS DURING WELDING	QC TASK	QC DOC.	QA TASK	QA DOC.
•	•	WPS followed • Settings on welding equipment • Travel speed • Selected welding materials • Shielding gas type/flow rate • Preheat applied • Interpass temperature maintained (min/max) • Proper position (F, V, H, OH) • Intermix of filler metals avoided unless approved	O	-	O	-
	•	Use of qualified welders	O	-	O	-
•	•	Control and handling of welding consumables • Packaging • Exposure control	O	-	O	-
•	•	No welding over cracked tack welds	O	-	O	-
•	•	Environmental conditions • Wind speed within limits • Precipitation and temperature	O	-	O	-
•	•	Welding techniques • Interpass and final cleaning • Each pass within profile limitations • Each pass meets quality requirements	O	-	O	-
•		Placement and installation of steel headed stud anchors	P	-	P	-

TABLE N5.6-2 COMBINED WITH TABLE J7-2 INSPECTION TASKS DURING BOLTING

AISC 360	AISC 341	VISUAL INSPECTION TASKS DURING BOLTING	QC TASK	QC DOC.	QA TASK	QA DOC.
•	•	Fastener assemblies of suitable condition placed in all holes and washers (if required) and nuts are positioned as required	O	-	O	-
•	•	Joint brought to the snug-tight condition prior to the pretensioning operation	O	-	O	-
•	•	Fastener component not turned by the wrench prevented from rotating	O	-	O	-
•	•	Fasteners are pretensioned in accordance with the RCSC *Specification* progressing systematically from the most rigid point toward the free edges	O	-	O	-

TABLE J9-2 INSPECTION OF COMPOSITE STRUCTURES DURING CONCRETE PLACEMENT

INSPECTION OF COMPOSITE STRUCTURES DURING CONCRETE PLACEMENT	QC TASK	QC DOC.	QA TASK	QA DOC.
Concrete: Material identification (mix design, compressive strength, maximum large aggregate size, maximum slump)	O	D	O	D
Limits on water added at the truck or pump	O	D	O	D
Proper placement techniques to limit segregation	O	-	O	-

TABLE 3: MASONRY MINIMUM VERIFICATION REQUIREMENTS

MINIMUM VERIFICATION REQUIREMENTS				
MINIMUM VERIFICATION	REQUIRED FOR QUALITY ASSURANCE [(a)]			REFERENCE FOR CRITERIA
	LEVEL 1	LEVEL 2	LEVEL 3	TMS 602
1. Prior to construction, verification of compliance of submittals	R	R	R	Art. 1.5
2. Prior to construction, verification of f 'm and f 'AAC except where specifically exempted by the Code.	NR	R	R	Art. 1.4 B
3. During construction, verification of Slump flow and Visual Stability Index (VSI) when self-consolidating grout is delivered to the project site.	NR	R	R	Art. 1.5 & 1.6.3
4. During construction, verification of f 'm and f 'AAC for every 5,000 sq. ft. (465 sq. m.)	NR	NR	R	Art. 1.4 B
5. During construction,verification of proportions of materials as delivered to the project site for premixed or preblended mortar, prestressing grout, and grout other than self-consolidating grout.	NR	NR	R	Art. 1.4 B

(a) R=Required, NR=Not Required

TABLE N5.4-3 COMBINED WITH TABLE J6-3 VISUAL INSPECTION TASKS AFTER WELDING

AISC 360	AISC 341	VISUAL INSPECTION TASKS AFTER WELDING	QC TASK	QC DOC.	QA TASK	QA DOC.
•	•	Welds cleaned	O	-	O	-
•	•	Size, length and location of welds	P	-	P	-
•	•	Welds meet visual acceptance criteria • Crack prohibition • Weld/ base-metal fusion • Crater cross section • Weld profiles and size • Undercut • Porosity	P	D	P	D
•		Arc strikes	P	-	P	-
•		*k*-area[1]	P	D	P	D
•		Weld access holes in rolled heavy shapes and built-up heavy shapes[2]	P	-	P	-
	•	Placement of reinforcing or contouring fillet welds (if required)	P	D	P	D
•	•	Backing removed, weld tabs removed and finished, and fillet welds added (if required)	P	D	P	D
•	•	Repair activities	P	-	P	D
•		Document acceptance or rejection of welded joint or member	P	D	P	D
•		No prohibited welds have been added without the approval of the EOR	O	-	O	-

[1] When welding of doubler plates, continuity plates or stiffeners has been performed in the *k*-area, visually inspect the web *k*-area for cracks within 3 in. (75mm) of the weld, no sooner than 48 hours following weld completion.
[2] After rolled heavy shapes and built-up heavy shapes are welded, visually inspect the weld access hole for cracks.

TABLE N5.6-3 COMBINED WITH TABLE J7-3 INSPECTION TASKS AFTER BOLTING

AISC 360	AISC 341	VISUAL INSPECTION TASKS AFTER BOLTING	QC TASK	QC DOC.	QA TASK	QA DOC.
•	•	Document acceptance or rejection of bolted connections	P	D	P	D

TABLE J9-3 INSPECTION OF COMPOSITE STRUCTURES AFTER CONCRETE PLACEMENT

INSPECTION OF COMPOSITE STRUCTURES AFTER CONCRETE PLACEMENT	QC TASK	QC DOC.	QA TASK	QA DOC.
Achievement of minimum specified concrete compressive strength at specified age	-	D	-	D

CRSA

PROJECT **240104**

BID PACKAGE #1 2024-08-26

REVISIONS

NO.	DATE	DESCRIPTION

REVIEWED FOR CODE COMPLIANCE
Thomas W Peterson
10/28/2024
DIVISION OF FACILITIES CONSTRUCTION AND MANAGEMENT

DTC WELDING TECH & BUILDING
355 SOUTH 650 EAST
KAYSVILLE, UT 84037

DAVISTECH
DAVIS TECHNICAL COLLEGE

PROFESSIONAL STRUCTURAL ENGINEER
GREGORY S. PENNY
08/28/2024
9027257
STATE OF UTAH

2024-08-26
BID PACKAGE #1

NOTE:
THESE STRUCTURAL DRAWINGS ARE BASED ON ARCHITECTURAL DRAWINGS DATED July 23, 2024

DIMENSIONS AND ELEVATIONS, AS THEY RELATE TO THE BUILDING IN GENERAL, i.e. GRID TO GRID DIMENSIONS OR DECK BEARING ELEVATIONS, ARE SUPPLIED BY THE ARCHITECT. THEY ARE PROVIDED ON THE STRUCTURAL PLANS AND DETAILS FOR THE CONVENIENCE OF THE CONTRACTOR. VERIFY DIMENSIONS AND ELEVATIONS WITH ARCHITECTURAL DRAWINGS.

GENERAL STRUCTURAL NOTES

SE003.1

(801) 355-5915

8/30/2024 4:15:24 PM

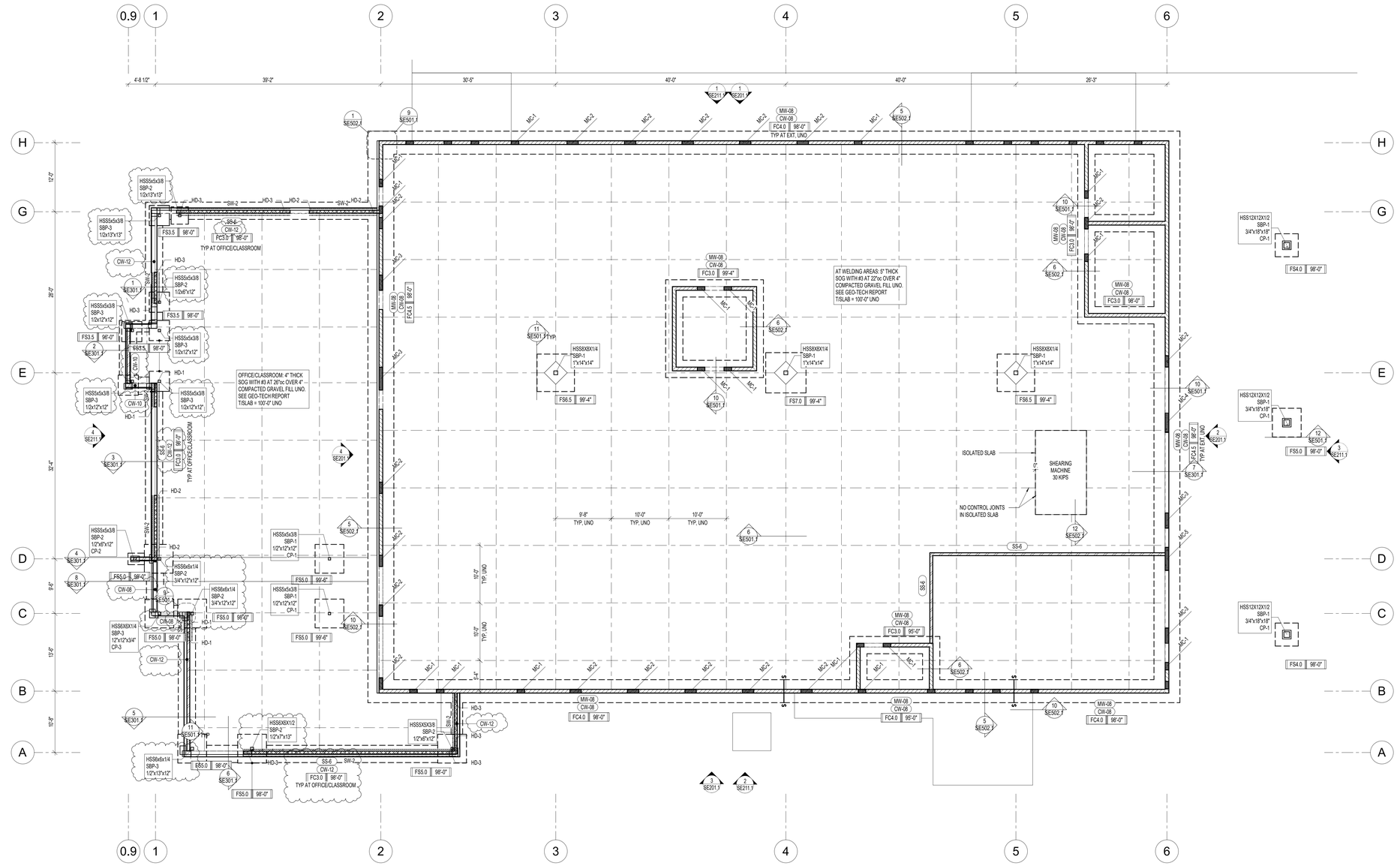

NORTH

1 FOOTING AND FOUNDATION PLAN
SE101.1 SCALE: 1/8" = 1'-0"

FOOTING AND FOUNDATION PLAN NOTES:

1. COORDINATE LOCATION OF DEPRESSED SLABS, SLOPED SLABS, AND FLOOR DRAINS WITH ARCHITECTURAL AND MECHANICAL DRAWINGS.
2. SEE ARCHITECTURAL DRAWINGS AND CIVIL DRAWINGS FOR EXTERIOR CONCRETE WORK AT DOORS, SIDEWALKS, ETC.
3. PER IBC 1809.5.1, PROVIDE CLEAN GRAVEL (NO FINES) DOWN TO FROST DEPTH UNDER EXTERIOR LANDINGS OF ALL REQUIRED EXITS WITH OUTWARD-SWINGING DOORS UNDER THE FOOTPRINT OF THE DOOR SWING.
4. SEE ARCHITECTURAL DRAWINGS FOR DIMENSIONS TO COLUMNS, WALLS, SLAB EDGES, SLOPES, ELEVATIONS, CURBS, DEPRESSIONS AND DRAINS.
5. SEE ELEVATIONS FOR MASONRY LINTELS, PILASTERS, AND WALL REINFORCEMENT.
6. CENTER ALL SPOT FOOTINGS UNDER COLUMNS AS SHOWN ON PLAN, TYPICAL UNLESS NOTED OTHERWISE.
7. SEE SCHEDULES ON (SE900) SHEETS FOR:
   - FOOTINGS
   - CONCRETE WALLS
   - CONCRETE PIERS
   - REINFORCING SPLICE LENGTHS
   - STEEL COLUMNS
8. SEE TYPICAL FOOTING AND FOUNDATION DETAILS ON (SE500) SHEETS FOR:
   - SLAB CONSTRUCTION AND CONTROL JOINTS
   - FOOTING STEPS
   - CORNER BARS
   - PIPES PERPENDICULAR AND PARALLEL TO FOOTINGS
   - REINFORCING AT MISCELLANEOUS OPENINGS
   - REINFORCING AT SLAB DISCONTINUITIES
   - FROST COVER AND STRUCTURAL FILL
9. SEE TYPICAL FOOTING AND FOUNDATION DETAILS ON (SE500) SHEETS FOR:
   - REINFORCING AT MISCELLANEOUS MASONRY OPENINGS AND RECESSES.
   - MASONRY CONTROL JOINTS
   - TERMINATION OF HORIZONTAL WALL REINFORCING AT ENDS OF MASONRY WALLS
   - CORNER WALL REINFORCING FOR SINGLE REINFORCED MASONRY WALLS
10. SEE TYPICAL STEEL STUD DETAILS ON SE704.1 INCLUDING:
    - TYPICAL BOTTOM TRACK ANCHORAGE FOR NON- SHEAR WALLS
    - STEEL STUD BRIDGING
    - DEFLECTION TRACK ASSEMBLY
    - FRAMING AT CORNERS
    - JAMBS AND HEADERS
    - NOMENCLATURE
    - PIPE HANGERS
    - NON BEARING WALL TO METAL DECK CONNECTIONS

MARKS AND SYMBOLS LEGEND

	SECTION MARK SHEET NUMBER
	FRAME ELEVATION SHEET NUMBER SEE DETAIL (13 / SE501.1)
FTG EL	FOOTING DESIGNATION TOF ELEVATION
	DEPRESSED FND WALL, POUR SLAB OVER
S S	
	FLOOR OFFSET. SEE DETAILS
	CONCRETE WALL (SLIP)
	MASONRY WALL
or	STEEL COLUMN
	MASONRY COLUMN
CJ	CONTROL JOINT
CP-x	CONCRETE PIER, SEE SCHEDULE
FC-x	CONTINUOUS FOOTING, SEE SCHEDULE
FS-x	SPOT FOOTING, SEE SCHEDULE
FTS-x	THICKENED SLAB FOOTING, SEE SCHEDULE
SBP-x	STEEL BASE PLATE, SEE SCHEDULE
CW-X	CONCRETE WALL, SEE SCHEDULE
MW-X CW-X	CONC WALL BLW AND MAS WALL ABV, SEE SCHED AND ELEVATIONS
SS-X	STEEL STUD WALL, SEE SCHEDULE
SW-x	STL STUD SHEAR WALL AND TYPE ABOVE, LINE INDICATES SIDE OF SHEATHING. TWO LINES INDICATES DOUBLE SHEATHING SEE SCHEDULE.
HD	CONTINUOUS ROD HOLD-DOWN LOCATION, SEE SCHEDULE
MFC	MOMENT FRAME COLUMN, SEE ELEV AND DETAILS
MFC	MOMENT FRAME COLUMN, SEE ELEV AND DETAILS

CRSA

PROJECT **240104**

ADDENDUM #5 2024-11-01

REVISIONS

NO.	DATE	DESCRIPTION
1	9/16/2024	ADD-02
2	10/17/2024	ADD-03
3	10/25/2024	ADD-04
4	10/28/2024	ADD-05
5	11/14/2024	RFI-010

DTC WELDING TECH & FABRICATION BUILDING

355 SOUTH 650 EAST
KAYSVILLE, UT 84037

DAVISTECH
DAVIS TECHNICAL COLLEGE

2024-11-01
ADDENDUM #5

NOTE:
THESE STRUCTURAL DRAWINGS ARE BASED ON ARCHITECTURAL DRAWINGS DATED July 23, 2024

DIMENSIONS AND ELEVATIONS, AS THEY RELATE TO THE BUILDING IN GENERAL, i.e. GRID TO GRID DIMENSIONS OR DECK BEARING ELEVATIONS, ARE SUPPLIED BY THE ARCHITECT. THEY ARE PROVIDED ON THE STRUCTURAL PLANS AND DETAILS FOR THE CONVENIENCE OF THE CONTRACTOR. VERIFY DIMENSIONS AND ELEVATIONS WITH ARCHITECTURAL DRAWINGS.

FOOTING AND FOUNDATION PLAN

SE101.1

(801) 355-5915

11/14/2024 3:05:27 PM

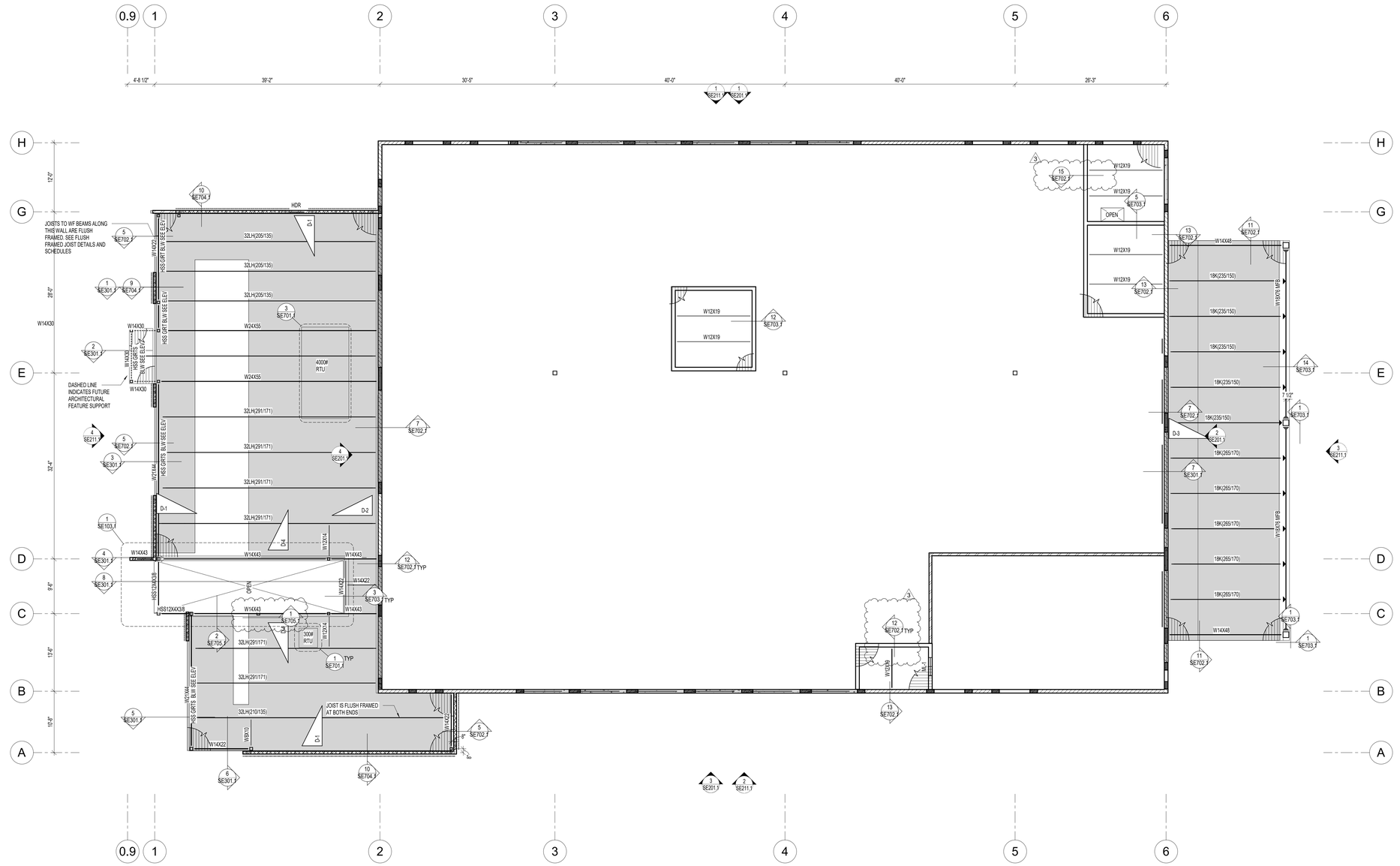

NORTH

1 SE102.1 LOW ROOF FRAMING PLAN
SCALE: 1/8" = 1'-0"

ROOF FRAMING PLAN NOTES:

1. VERIFY ROOF SLOPES, DRAINS, AND DECK BEARING ELEVATIONS WITH ARCHITECTURAL DRAWINGS.
2. SEE ARCHITECTURAL DRAWINGS FOR DIMENSIONS TO COLUMNS, WALLS, SLAB EDGES, SLOPES, ELEVATIONS, CURBS, DEPRESSIONS AND DRAINS.
3. ALL JOISTS SHALL HAVE 9" DEEP BEARING ENDS. UNLESS NOTED OTHERWISE.
4. ALL GIRDERS SHALL HAVE 7 1/2" DEEP BEARING ENDS. UNLESS NOTED OTHERWISE.
5. OPEN WEB STEEL JOISTS AND JOIST GIRDERS SHALL BE DESIGNATED BY THE MANUFACTURER TO SUPPORT THE MECHANICAL AND LATERAL LOADS SHOWN ON THE ROOF FRAMING PLANS IN ADDITION TO THE UNIFORM AND POINT LOADS SHOWN.
6. CONTRACTOR SHALL NOT SUPPORT ANY LOADS FROM JOIST BRIDGING.
7. CONTRACTOR SHALL NOT ATTACH BRACING OF MEP OR FIRE PROTECTION TO BOTTOM CHORDS OF JOISTS OR BRIDGING.
8. WHERE SKYLIGHTS OR MECHANICAL UNITS INTERRUPT HORIZONTAL BRIDGING, PROVIDE CROSS BRIDGING AT JOIST SPACES ON EA SIDE, TYPICAL.
9. WHERE DIAGONAL BRIDGING CONFLICTS WITH MECHANICAL DUCTS, REMOVE DIAGONAL BRIDGING AND REPLACE WITH HORIZONTAL BRIDGING (AFTER ROOF DECK IS IN PLACE).
10. ' - INDICATES THAT THESE JOISTS SHALL BE DESIGNED FOR AN ADD LOAD OF 100# AT ANY TOP CHORD PANEL POINT. THIS LOAD IS TO BE ADDED TO THE GIRDER TOP CHORD LOAD. MULTIPLE *** ARE ADDITIVE.
11. JOIST DESIGNER SHALL DESIGN JOISTS AND SUPPLY ADDITIONAL BRIDGING AS REQUIRED FOR NET UPLIFT BASED ON DESIGN CRITERIA IN THE GENERAL STRUCTURAL NOTES.
12. VERIFY SIZE, WEIGHT, AND LOCATION OF ALL ROOF TOP MECHANICAL UNITS WITH ARCHITECTURAL AND MECHANICAL DRAWINGS. COORDINATE OPENINGS WITH MECHANICAL, ELECTRICAL, AND GENERAL CONTRACTORS.
13. SPRINKLER DESIGNER SHALL COORDINATE THE SPRINKLER DESIGN WITH THE JOIST/GIRDER SHOP DRAWINGS.
14. ALL JOIST TOP CHORDS BEARING AT THE MASONRY WALLS SHALL BE DESIGNED FOR A MINIMUM AXIAL LOAD OF 10.8 KIPS IN TENSION AND COMPRESSION THAT REDUCES TO 0.0 KIPS AT THE OPPOSITE END OF THE JOIST. LOADS ARE DUE TO SEISMIC AND ARE PROVIDED AT ULTIMATE STRENGTH LEVEL INCLUDING OVERSTRENGTH FACTOR OF 1.4. JOIST SUPPLIER TO DESIGN JOISTS TO TRANSFER THIS ANCHORAGE LOAD THROUGH THE JOIST BEARING SEAT.
15. SPRINKLER DESIGNER SHALL COORDINATE
16. SEE SCHEDULES ON (SE800) SHEETS FOR:
    - SINGLE SHEAR BEAM CONNECTIONS, TYPICAL UNLESS NOTED OTHERWISE.
    - STEEL COLUMN
    - CONCRETE AND MASONRY LINTELS
17. SEE TYPICAL FRAMING DETAILS ON (SE700) SHEETS FOR:
    - FRAMING AT ROOF OPENINGS, MECHANICAL UNITS, SKYLIGHTS AND ROOF DRAINS.
    - PIPE SLEEVES THROUGH ROOF DECK
    - SUSPENDED LOADS ON ROOF DECK
    - JOIST REINFORCING AT POINT LOADS
    - JOIST TOP CHORD TIE

MARKS AND SYMBOLS LEGEND

- SECTION MARK / SHEET NUMBER
- FRAME ELEVATION / SHEET NUMBER
- MTL ROOF DECK, SEE GSN
- CONCRETE OVER METAL DECK, SEE GENERAL STRUCTURAL NOTES
- MASONRY WALL
- BRG WALL BLW
- STEEL COLUMN
- JST TOP CHORD TIE
- HDR — STEEL STUD HEADER, SEE SCHEDULE
- ML-x — MASONRY LINTEL, SEE SCHEDULE
- T=C=xK — ROOF JOIST TOP CHORD SHALL BE DESIGNED FOR AN ADDITIONAL LOAD OF V KIPS IN TENSION AND COMPRESSION. LOADS ARE PROVIDED AT ULTIMATE STRENGTH LEVEL
- RD — ROOF DRAIN SEE (5 / SE701.1) AND SEE ARCHITECTURAL AND MECHANICAL FOR EXACT LOCATION
- LATERAL FRAME MOMENT CONNECTIONS SEE DET (1 / SE703.1)
- FRAME OR COLLECTOR BRACE, SEE DET (14 / SE703.1)

SNOW DRIFT LOADING DIAGRAM

D-1	MAX = 33 PSF L = 7' - 0"	D-2	MAX = 63 PSF L = 22' - 2"
D-3	MAX = 57 PSF L = 24' - 2"	D-4	MAX = 78 PSF L = 17' - 9"



WHERE 'L' EXCEEDS LENGTH OF LOWER ROOF, DRIFT TAPERS TO 0 PSF AT THE FAR END OF LOWER ROOF SHADED AREA ON PLAN DENOTES EXTENT OF SNOW DRIFT

CRSA

PROJECT **240104**

ADDENDUM #5 2024-11-01

REVISIONS

NO.	DATE	DESCRIPTION
1	10/17/2024	ADD-03
2	10/25/2024	ADD-04
3	10/28/2024	ADD-05

DTC WELDING TECH & FABRICATION BUILDING

355 SOUTH 650 EAST
KAYSVILLE, UT 84037

DAVISTECH
DAVIS TECHNICAL COLLEGE

2024-11-01
ADDENDUM #5

NOTE:
THESE STRUCTURAL DRAWINGS ARE BASED ON ARCHITECTURAL DRAWINGS DATED July 23, 2024

DIMENSIONS AND ELEVATIONS, AS THEY RELATE TO THE BUILDING IN GENERAL, i.e. GRID TO GRID DIMENSIONS OR DECK BEARING ELEVATIONS, ARE SUPPLIED BY THE ARCHITECT. THEY ARE PROVIDED ON THE STRUCTURAL PLANS AND DETAILS FOR THE CONVENIENCE OF THE CONTRACTOR. VERIFY DIMENSIONS AND ELEVATIONS WITH ARCHITECTURAL DRAWINGS.

LOW ROOF FRAMING PLAN

SE102.1

(801) 355-5915

11/7/2024 3:49:47 PM

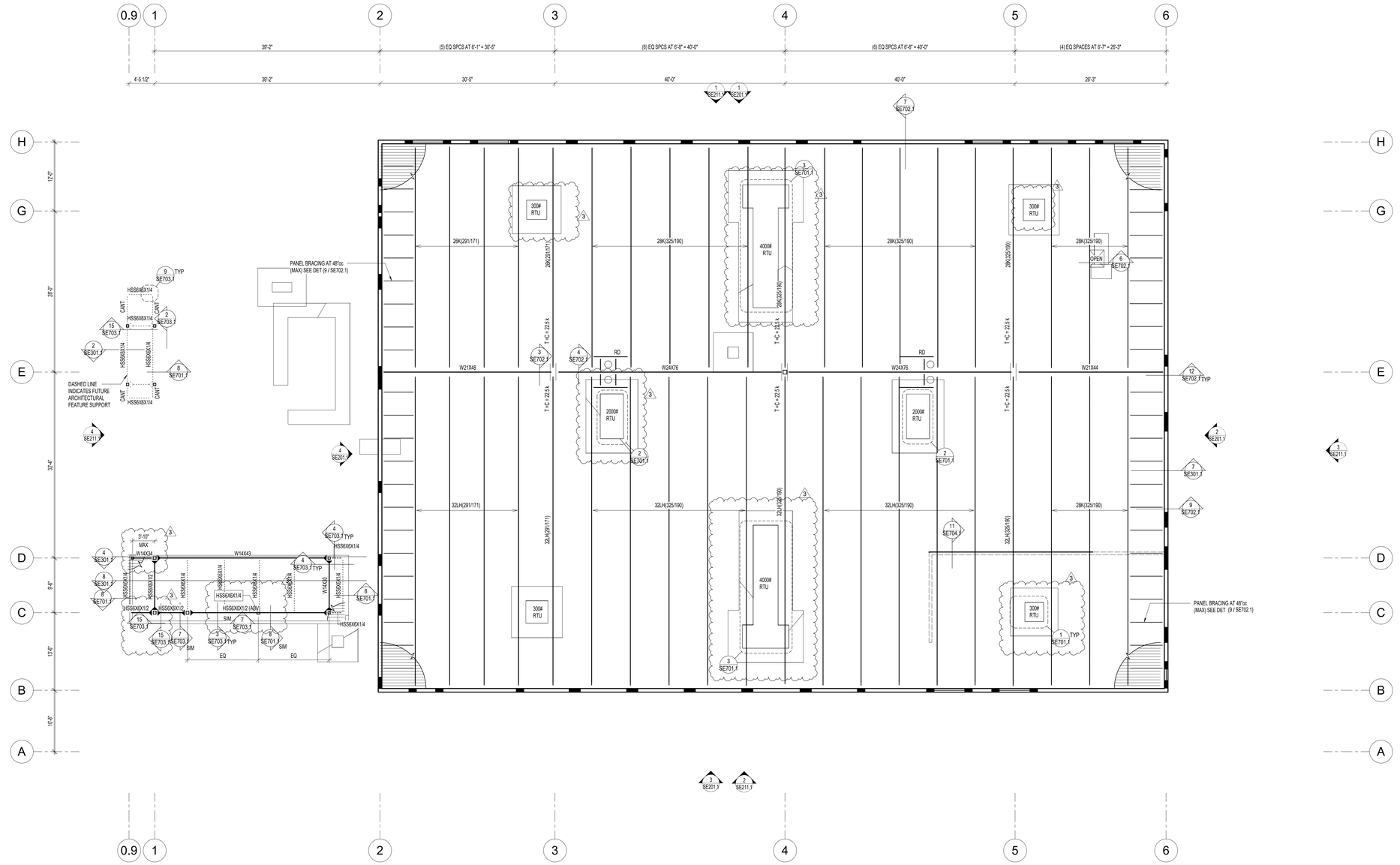

NORTH

1 SE103.1 HIGH ROOF FRAMING PLAN
SCALE: 1/8" = 1'-0"

ROOF FRAMING PLAN NOTES:

1. VERIFY ROOF SLOPES, DRAINS, AND DECK BEARING ELEVATIONS WITH ARCHITECTURAL DRAWINGS.
2. SEE ARCHITECTURAL DRAWINGS FOR DIMENSIONS TO COLUMNS, WALLS, SLAB EDGES, SLOPES, ELEVATIONS, CURBS, DEPRESSIONS AND DRAINS.
3. ALL JOISTS SHALL HAVE 9" DEEP BEARING ENDS. UNLESS NOTED OTHERWISE.
4. ALL GIRDERS SHALL HAVE 7 1/2" DEEP BEARING ENDS. UNLESS NOTED OTHERWISE.
5. OPEN WEB STEEL JOISTS AND JOIST GIRDERS SHALL BE DESIGNATED BY THE MANUFACTURER TO SUPPORT THE MECHANICAL AND LATERAL LOADS SHOWN ON THE ROOF FRAMING PLANS IN ADDITION TO THE UNIFORM AND POINT LOADS SHOWN.
6. CONTRACTOR SHALL NOT SUPPORT ANY LOADS FROM JOIST BRIDGING.
7. CONTRACTOR SHALL NOT ATTACH BRACING OF MEP OR FIRE PROTECTION TO BOTTOM CHORDS OF JOISTS OR BRIDGING.
8. WHERE SKYLIGHTS OR MECHANICAL UNITS INTERRUPT HORIZONTAL BRIDGING, PROVIDE CROSS BRIDGING AT JOIST SPACES ON EA SIDE, TYPICAL.
9. WHERE DIAGONAL BRIDGING CONFLICTS WITH MECHANICAL DUCTS, REMOVE DIAGONAL BRIDGING AND REPLACE WITH HORIZONTAL BRIDGING (AFTER ROOF DECK IS IN PLACE).
10. ' - INDICATES THAT THESE JOISTS SHALL BE DESIGNED FOR AN ADLOAD OF 100# AT ANY TOP CHORD PANEL POINT. THIS LOAD IS TO BE ADDED TO THE GIRDER TOP CHORD LOAD. MULTIPLE '''' ARE ADDITIVE.
11. JOIST DESIGNER SHALL DESIGN JOISTS AND SUPPLY ADDITIONAL BRIDGING AS REQUIRED FOR NET UPLIFT BASED ON DESIGN CRITERIA IN THE GENERAL STRUCTURAL NOTES.
12. VERIFY SIZE, WEIGHT, AND LOCATION OF ALL ROOF TOP MECHANICAL UNITS WITH ARCHITECTURAL AND MECHANICAL DRAWINGS. COORDINATE OPENINGS WITH MECHANICAL, ELECTRICAL, AND GENERAL CONTRACTORS.
13. SPRINKLER DESIGNER SHALL COORDINATE THE SPRINKLER DESIGN WITH THE JOIST/GIRDER SHOP DRAWINGS.
14. ALL JOIST TOP CHORDS BEARING AT THE MASONRY WALLS SHALL BE DESIGNED FOR A MINIMUM AXIAL LOAD OF 10.8 KIPS IN TENSION AND COMPRESSION THAT REDUCES TO 0.0 KIPS AT THE OPPOSITE END OF THE JOIST. LOADS ARE DUE TO SEISMIC AND ARE PROVIDED AT ULTIMATE STRENGTH LEVEL INCLUDING OVERSTRENGTH FACTOR OF 1.4. JOIST SUPPLIER TO DESIGN JOISTS TO TRANSFER THIS ANCHORAGE LOAD THROUGH THE JOIST BEARING SEAT.
15. SPRINKLER DESIGNER SHALL COORDINATE
16. SEE SCHEDULES ON (SE800) SHEETS FOR:
    - SINGLE SHEAR BEAM CONNECTIONS, TYPICAL UNLESS NOTED OTHERWISE.
    - STEEL COLUMN
    - CONCRETE AND MASONRY LINTELS
17. SEE TYPICAL FRAMING DETAILS ON (SE700) SHEETS FOR:
    - FRAMING AT ROOF OPENINGS, MECHANICAL UNITS, SKYLIGHTS AND ROOF DRAINS.
    - PIPE SLEEVES THROUGH ROOF DECK
    - SUSPENDED LOADS ON ROOF DECK
    - JOIST REINFORCING AT POINT LOADS
    - JOIST TOP CHORD TIE

MARKS AND SYMBOLS LEGEND

- SECTION MARK / SHEET NUMBER
- FRAME ELEVATION / SHEET NUMBER
- MTL ROOF DECK, SEE GSN
- CONCRETE OVER METAL DECK, SEE GENERAL STRUCTURAL NOTES
- MASONRY WALL
- BRG WALL BLW
- STEEL COLUMN or I
- JST TOP CHORD TIE
- HDR — STEEL STUD HEADER, SEE SCHEDULE
- ML-x — MASONRY LINTEL, SEE SCHEDULE
- T=C+nK — ROOF JOIST TOP CHORD SHALL BE DESIGNED FOR AN ADDITIONAL LOAD OF 'n' KIPS IN TENSION AND COMPRESSION. LOADS ARE PROVIDED AT ULTIMATE STRENGTH LEVEL
- RD — ROOF DRAIN SEE (5 / SE701.1) AND SEE ARCHITECTURAL AND MECHANICAL FOR EXACT LOCATION
- LATERAL FRAME MOMENT CONNECTIONS SEE DET (1 / SE703.1)
- FRAME OR COLLECTOR BRACE, SEE DET (14 / SE703.1)

SNOW DRIFT LOADING DIAGRAM

D-1	MAX = 33 PSF L = 7' - 0"	D-2	MAX = 63 PSF L = 22' - 2"
D-3	MAX = 57 PSF L = 24' - 2"	D-4	MAX = 78 PSF L = 17' - 9"

MAX PSF
0 PSF
D-x
UNIFORM ROOF SNOW LOAD, SEE GSN
'L'

WHERE 'L' EXCEEDS LENGTH OF LOWER ROOF, DRIFT TAPERS TO 0 PSF AT THE FAR END OF LOWER ROOF SHADED AREA ON PLAN DENOTES EXTENT OF SNOW DRIFT

CRSA

PROJECT **240104**

BID PACKAGE #1 2024-08-26

REVISIONS

NO.	DATE	DESCRIPTION
1	9/16/2024	ADD-02
2	10/17/2024	ADD-03
3	10/28/2024	ADD-04

DTC WELDING TECH & FABRICATION BUILDING

355 SOUTH 650 EAST
KAYSVILLE, UT 84037

DAVISTECH
DAVIS TECHNICAL COLLEGE

GREGORY S. PENNY
STRUCTURAL
08/28/2024
90027257
STATE OF UTAH

2024-08-26
BID PACKAGE #1

NOTE:
THESE STRUCTURAL DRAWINGS ARE BASED ON ARCHITECTURAL DRAWINGS DATED July 23, 2024

DIMENSIONS AND ELEVATIONS, AS THEY RELATE TO THE BUILDING IN GENERAL, i.e. GRID TO GRID DIMENSIONS OR DECK BEARING ELEVATIONS, ARE SUPPLIED BY THE ARCHITECT. THEY ARE PROVIDED ON THE STRUCTURAL PLANS AND DETAILS FOR THE CONVENIENCE OF THE CONTRACTOR. VERIFY DIMENSIONS AND ELEVATIONS WITH ARCHITECTURAL DRAWINGS.

HIGH ROOF FRAMING PLAN

SE103.1

(801) 355-5915

10/28/2024 8:33:32 AM

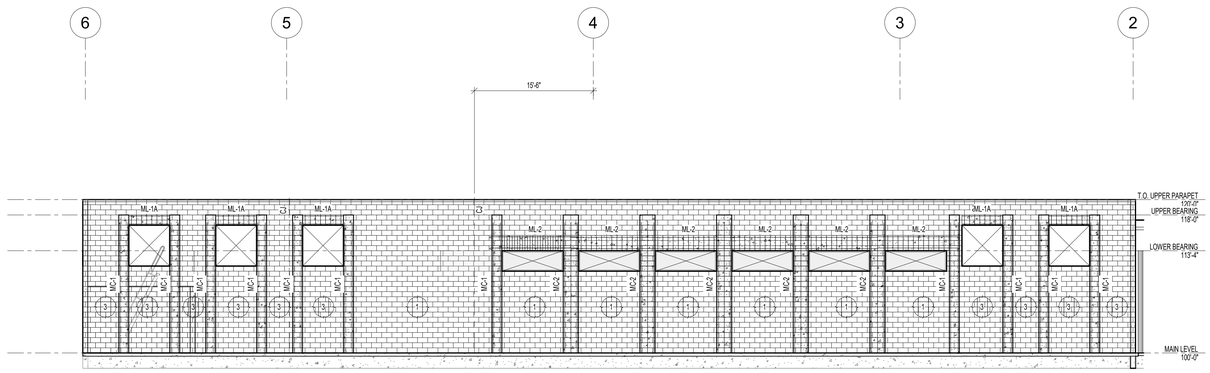

1 SE201.1 MASONRY WALL REINFORCING ELEVATION
SCALE: 1/8" = 1'-0"

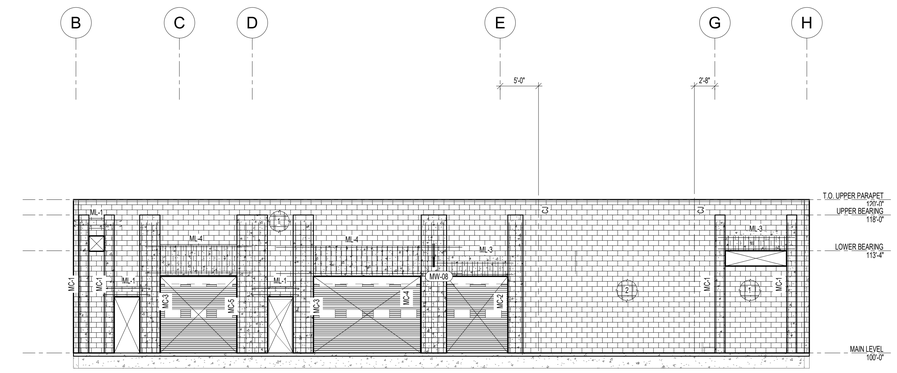

2 SE201.1 MASONRY WALL REINFORCING ELEVATION
SCALE: 1/8" = 1'-0"

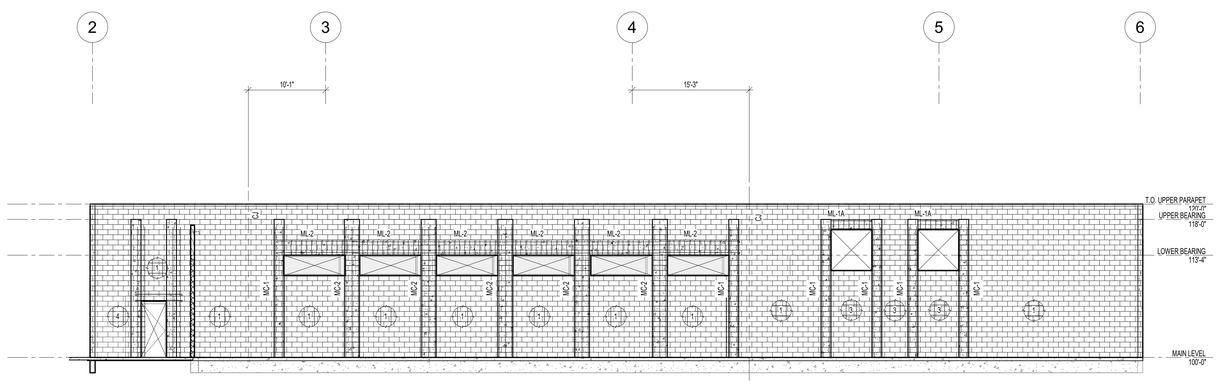

3 SE201.1 MASONRY WALL REINFORCING ELEVATION
SCALE: 1/8" = 1'-0"

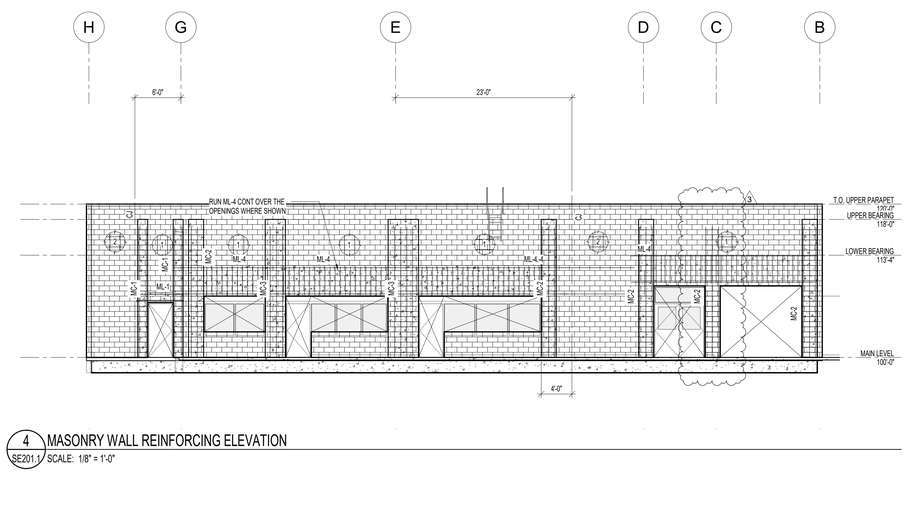

4 SE201.1 MASONRY WALL REINFORCING ELEVATION
SCALE: 1/8" = 1'-0"

MASONRY WALL REINFORCING

WALL TYPE	VERTICAL REINFORCING	HORIZONTAL REINFORCING
1	(1) #5 AT 32"oc	(1) #5 AT 32"oc
2	(1) #5 AT 32"oc	(1) #6 AT 16"oc
3	(1) #5 AT 24"oc	(1) #5 AT 24"oc
4	(1) #6 AT 16"oc	(1) #5 AT 24"oc

X — MASONRY WALL REINFORCING TYPE

SECTION MARK / SHEET NUMBER

ML-x — MASONRY LINTEL, SEE SCHEDULE

MFC — MOMENT FRAME COLUMN, SEE ELEV AND DETAILS

CJ — CONTROL JOINT

2024-08-26
BID PACKAGE #1

NOTE:
THESE STRUCTURAL DRAWINGS ARE BASED ON ARCHITECTURAL DRAWINGS DATED July 23, 2024

DIMENSIONS AND ELEVATIONS, AS THEY RELATE TO THE BUILDING IN GENERAL, i.e. GRID TO GRID DIMENSIONS OR DECK BEARING ELEVATIONS, ARE SUPPLIED BY THE ARCHITECT. THEY ARE PROVIDED ON THE STRUCTURAL PLANS AND DETAILS FOR THE CONVENIENCE OF THE CONTRACTOR. VERIFY DIMENSIONS AND ELEVATIONS WITH ARCHITECTURAL DRAWINGS.

CRSA

PROJECT **240104**

BID PACKAGE #1 2024-08-26

REVISIONS

NO.	DATE	DESCRIPTION
1	9/16/2024	ADD-02
2	10/17/2024	ADD-03
3	10/28/2024	ADD-04

DTC WELDING BUILDING

355 SOUTH 650 EAST
KAYSVILLE, UT 84037

DAVISTECH
DAVIS TECHNICAL COLLEGE

PROFESSIONAL STRUCTURAL ENGINEER
GREGORY S. DUNN
08/28/2024
9027237
STATE OF UTAH

ELEVATIONS
SE201.1

(801) 355-5915

10/28/2024 8:33:30 AM

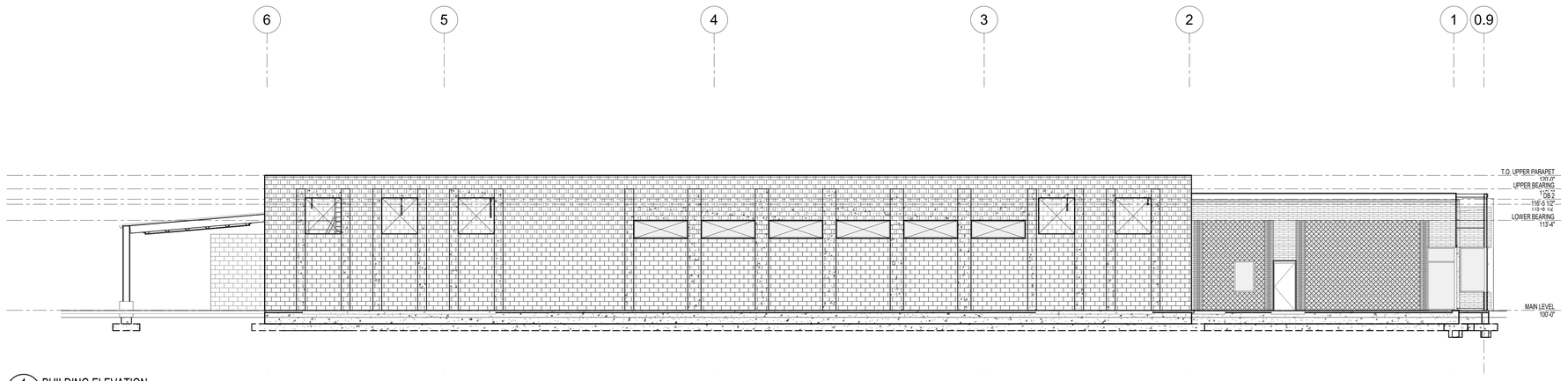

1 SE211.1 BUILDING ELEVATION
SCALE: 1/8" = 1'-0"

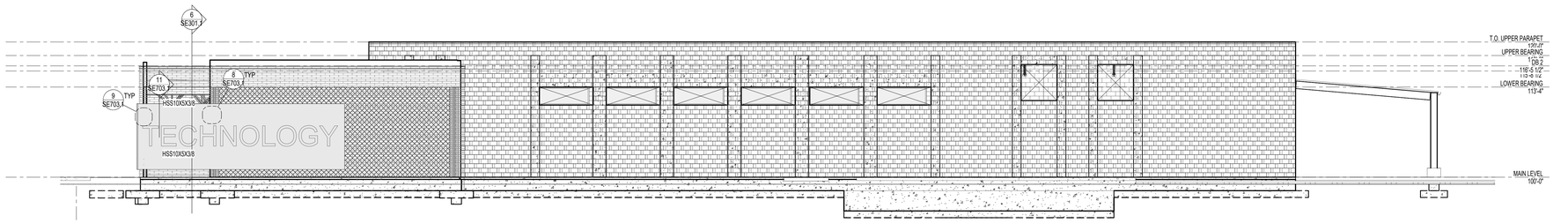

2 SE211.1 BUILDING ELEVATION
SCALE: 1/8" = 1'-0"

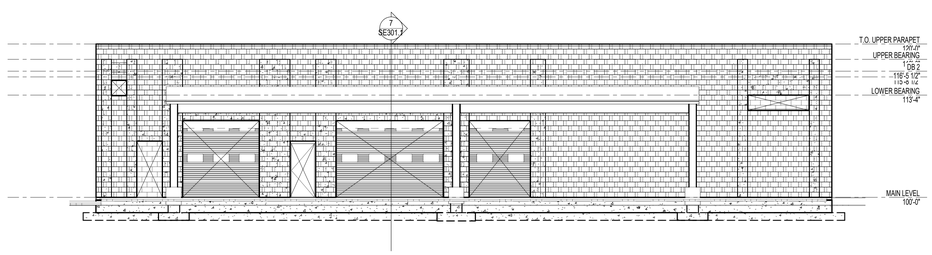

3 SE211.1 BUILDING ELEVATION
SCALE: 1/8" = 1'-0"

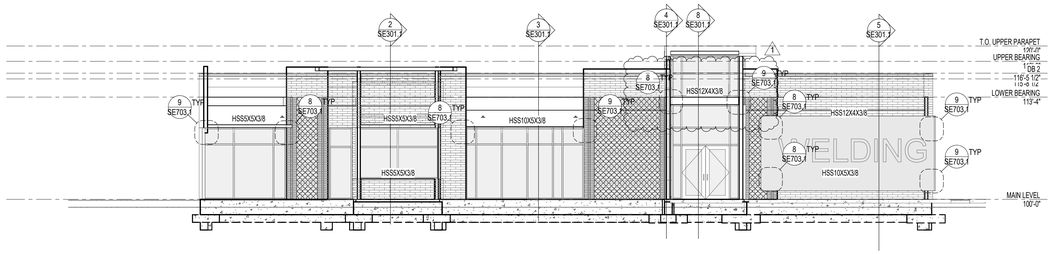

4 SE211.1 BUILDING ELEVATION
SCALE: 1/8" = 1'-0"

2024-08-26
BID PACKAGE #1

NOTE:
THESE STRUCTURAL DRAWINGS ARE BASED ON ARCHITECTURAL DRAWINGS DATED July 23, 2024

DIMENSIONS AND ELEVATIONS, AS THEY RELATE TO THE BUILDING IN GENERAL, i.e. GRID TO GRID DIMENSIONS OR DECK BEARING ELEVATIONS, ARE SUPPLIED BY THE ARCHITECT. THEY ARE PROVIDED ON THE STRUCTURAL PLANS AND DETAILS FOR THE CONVENIENCE OF THE CONTRACTOR. VERIFY DIMENSIONS AND ELEVATIONS WITH ARCHITECTURAL DRAWINGS.

10/29/2024 8:33:31 AM

CRSA

PROJECT **240104**

BID PACKAGE #1 2024-08-26

REVISIONS

NO.	DATE	DESCRIPTION
1	10/28/2024	ADD-04

DTC WELDING TECH & FABRICATION BUILDING

355 SOUTH 650 EAST
KAYSVILLE, UT 84037

DAVISTECH
DAVIS TECHNICAL COLLEGE

GREGORY S. DUNN
08/28/2024
9027257
STATE OF UTAH

BUILDING ELEVATIONS
SE211.1

(801) 355-5915

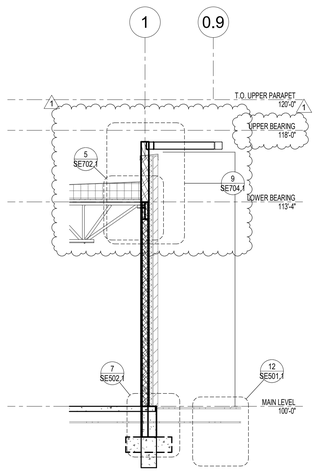

1 BUILDING SECTION
SE301.1 SCALE: 1/4" = 1'-0"

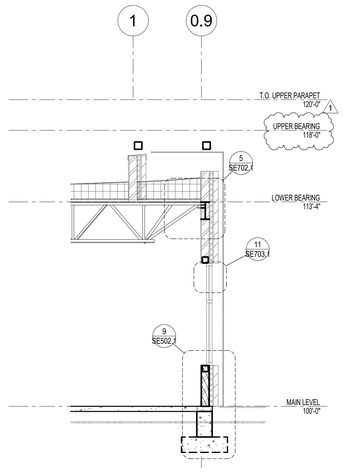

2 BUILDING SECTION
SE301.1 SCALE: 1/4" = 1'-0"

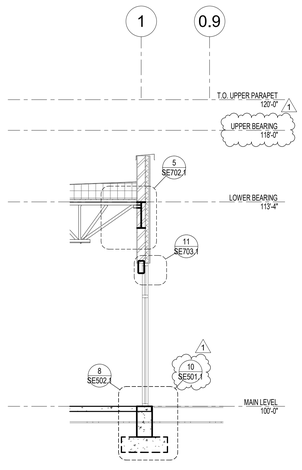

3 BUILDING SECTION
SE301.1 SCALE: 1/4" = 1'-0"

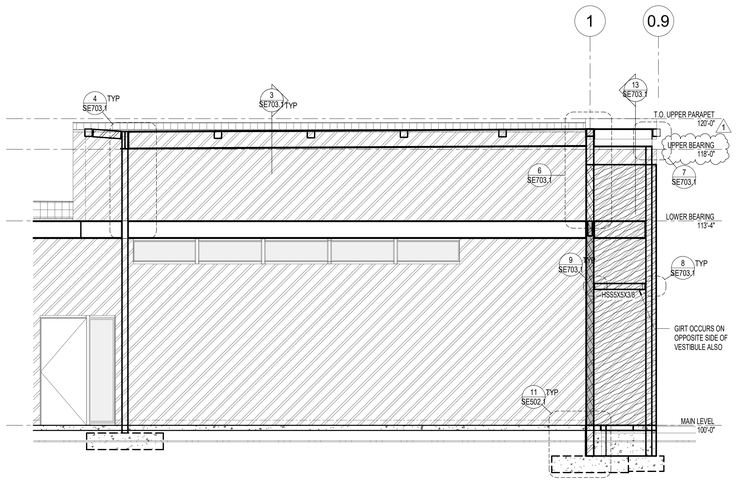

4 BUILDING SECTION
SE301.1 SCALE: 1/4" = 1'-0"

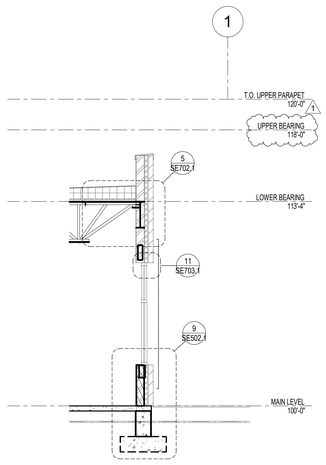

5 BUILDING SECTION
SE301.1 SCALE: 1/4" = 1'-0"

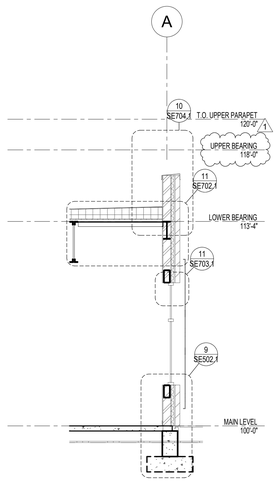

6 BUILDING SECTION
SE301.1 NO SCALE:

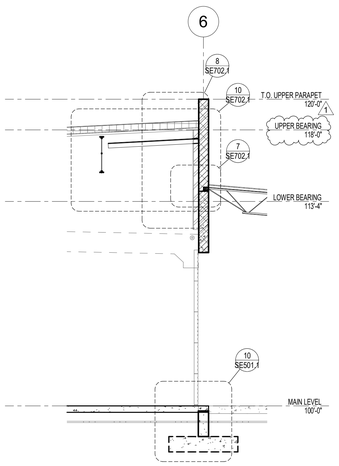

7 BUILDING SECTION
SE301.1 SCALE: 1/4" = 1'-0"

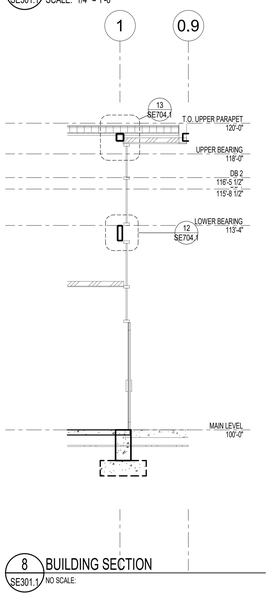

8 BUILDING SECTION
SE301.1 NO SCALE:

CRSA

PROJECT **240104**

BID PACKAGE #1 2024-08-26

REVISIONS

NO.	DATE	DESCRIPTION
1	10/28/2024	ADD-04

DTC WELDING TECH & FABRICATION BUILDING

355 SOUTH 650 EAST
KAYSVILLE, UT 84037

DAVISTECH
DAVIS TECHNICAL COLLEGE



2024-08-26
BID PACKAGE #1

NOTE:
THESE STRUCTURAL DRAWINGS ARE BASED ON ARCHITECTURAL DRAWINGS DATED July 23, 2024

DIMENSIONS AND ELEVATIONS, AS THEY RELATE TO THE BUILDING IN GENERAL, i.e. GRID TO GRID DIMENSIONS OR DECK BEARING ELEVATIONS, ARE SUPPLIED BY THE ARCHITECT. THEY ARE PROVIDED ON THE STRUCTURAL PLANS AND DETAILS FOR THE CONVENIENCE OF THE CONTRACTOR. VERIFY DIMENSIONS AND ELEVATIONS WITH ARCHITECTURAL DRAWINGS.

BUILDING SECTIONS

SE301.1

(801) 355-5915

10/28/2024 8:33:31 AM

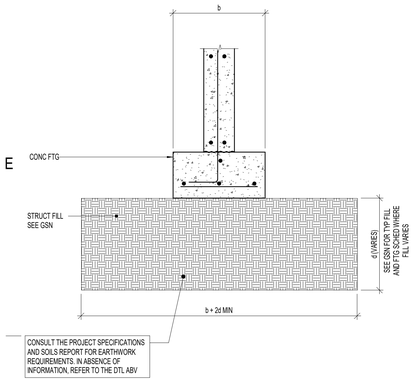

1 SE501.1 TYPICAL COMPACTED STRUCTURAL FILL
NO SCALE:

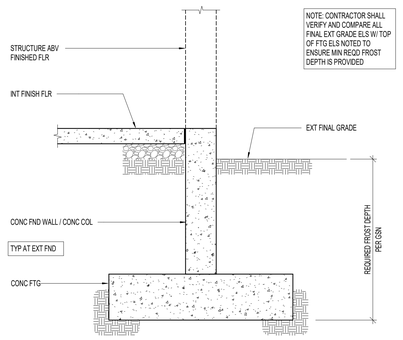

2 SE501.1 TYPICAL FOOTING DEPTH DETAIL FOR FROST PROTECTION
NO SCALE:

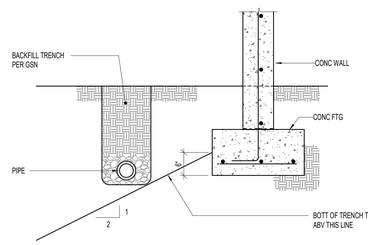

3 SE501.1 TYPICAL PIPE PARALLEL TO FOOTING
NO SCALE:

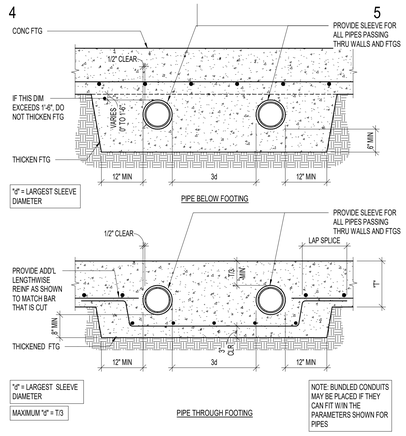

4 SE501.1 TYPICAL PIPE PERPENDICULAR TO FOOTING
NO SCALE:

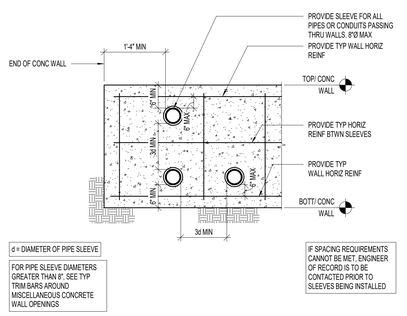

5 SE501.1 TYPICAL SMALL PIPE OR CONDUIT THROUGH CONCRETE WALL
NO SCALE:

D

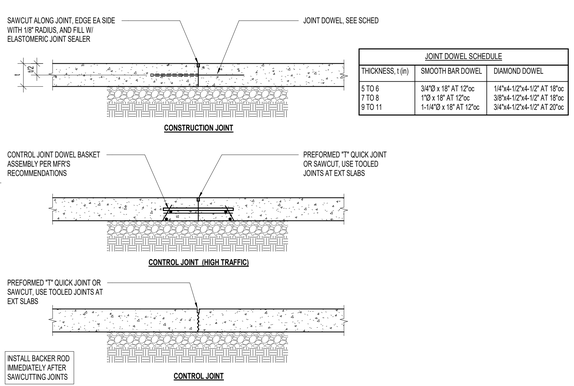

JOINT DOWEL SCHEDULE		
THICKNESS, t (in)	SMOOTH BAR DOWEL	DIAMOND DOWEL
5 TO 6	3/4"Ø x 18" AT 12"oc	1/4"x4-1/2"x4-1/2" AT 18"oc
7 TO 8	1"Ø x 18" AT 12"oc	3/8"x4-1/2"x4-1/2" AT 18"oc
9 TO 11	1-1/4"Ø x 18" AT 12"oc	3/4"x4-1/2"x4-1/2" AT 20"oc

C

INSTALL BACKER ROD IMMEDIATELY AFTER SAWCUTTING JOINTS

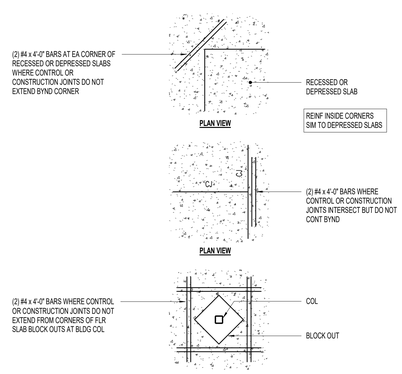

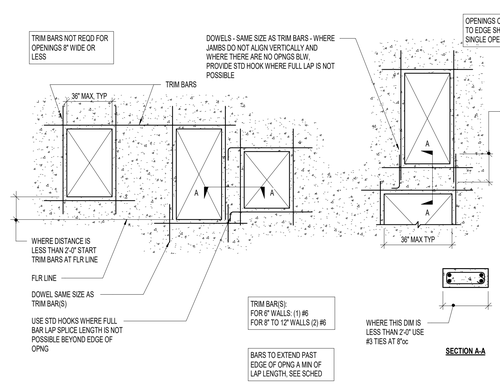

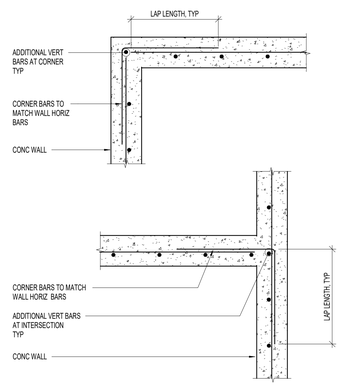

6 SE501.1 TYPICAL UNREINFORCED STRUCTURAL SLAB ON GRADE JOINTS
NO SCALE:

7 SE501.1 TYPICAL SLAB ON GRADE DISCONTINUITIES REQUIRING ADDITIONAL REINFORCING
NO SCALE:

8 SE501.1 TYPICAL TRIM BARS AROUND MISCELLANEOUS CONCRETE WALL OPENINGS UNLESS NOTED OTHERWISE
NO SCALE:

9 SE501.1 TYPICAL CORNER BARS FOR SINGLE REINFORCED CONCRETE WALLS (PLAN VIEW)
NO SCALE:

B

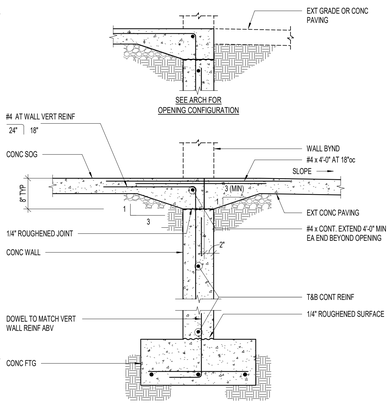

10 SE501.1 FOUNDATION WALL AT OPENING DETAIL
NO SCALE:

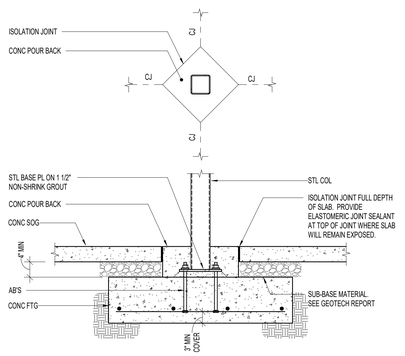

11 SE501.1 TYPICAL TUBE STEEL COLUMN TO CONCRETE FOOTING
NO SCALE:

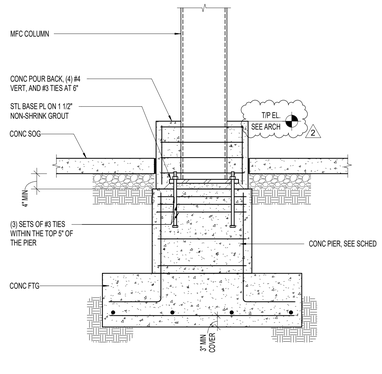

12 SE501.1 TYPICAL TUBE STEEL COLUMN TO CONCRETE PIER
NO SCALE:

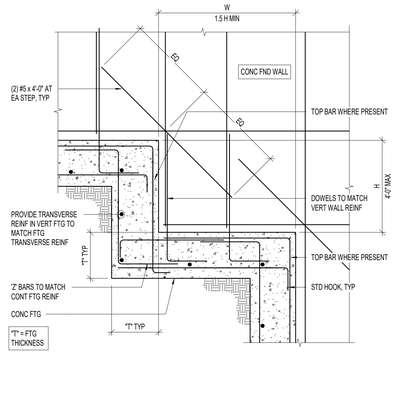

13 SE501.1 TYPICAL FOOTING STEP AT CONCRETE FOUNDATION WALL
NO SCALE:

A

1/17/2024 3:49:03 PM

CRSA

PROJECT **240104**

ADDENDUM #5 2024-11-01

REVISIONS

NO.	DATE	DESCRIPTION
1	9/16/2024	ADD-02
2	10/28/2024	ADD-05

DTC WELDING BUILDING TECH & FABRICATION

355 SOUTH 650 EAST
KAYSVILLE, UT 84037

DAVISTECH
DAVIS TECHNICAL COLLEGE

2024-11-01
ADDENDUM #5

NOTE:
THESE STRUCTURAL DRAWINGS ARE BASED ON ARCHITECTURAL DRAWINGS DATED July 23, 2024

DIMENSIONS AND ELEVATIONS, AS THEY RELATE TO THE BUILDING IN GENERAL, i.e. GRID TO GRID DIMENSIONS OR DECK BEARING ELEVATIONS, ARE SUPPLIED BY THE ARCHITECT. THEY ARE PROVIDED ON THE STRUCTURAL PLANS AND DETAILS FOR THE CONVENIENCE OF THE CONTRACTOR. VERIFY DIMENSIONS AND ELEVATIONS WITH ARCHITECTURAL DRAWINGS.

FOOTING AND FOUNDATION DETAILS

SE501.1

(801) 355-5915

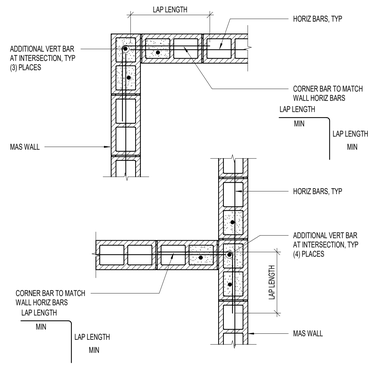

1 SE502.1 TYPICAL CORNER WALL REINFORCING FOR SINGLE REINFORCED MASONRY WALLS (PLAN VIEW)
NO SCALE:
T-560-01

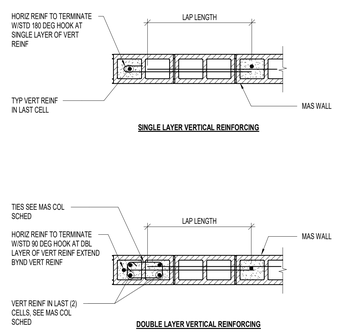

2 SE502.1 TYPICAL TERMINATION OF HORIZONTAL REINFORCING FOR REINFORCED MASONRY WALLS (PLAN VIEW)
NO SCALE:
T-560-02

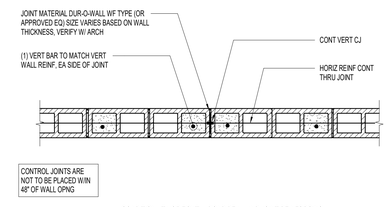

3 SE502.1 TYPICAL CONTROL JOINT FOR SINGLE REINFORCED MASONRY WALLS (PLAN VIEW)
NO SCALE:
T-560-03

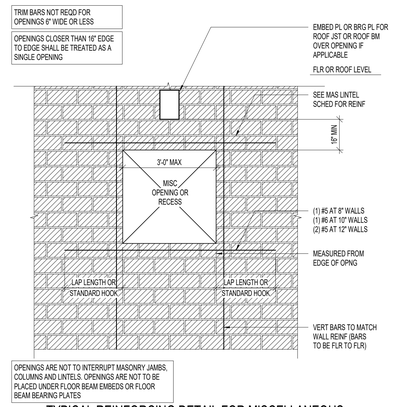

4 SE502.1 TYPICAL REINFORCING DETAIL FOR MISCELLANEOUS MASONRY WALL OPENINGS AND RECESSES
NO SCALE:
T-560-04

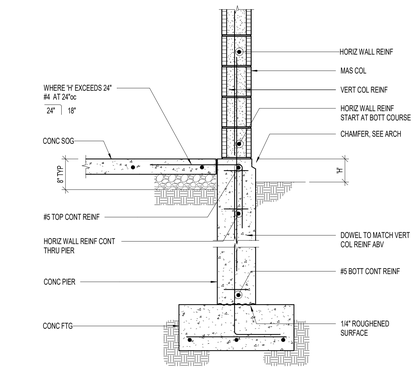

5 SE502.1 TYPICAL MASONRY WALL ON FOUNDATION WALL
NO SCALE:
T-562-06

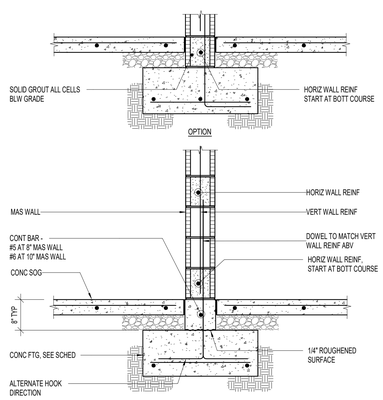

6 SE502.1 TYPICAL SINGLE MAT REINFORCING MASONRY WALL ON INTERIOR CONCRETE FOOTING
NO SCALE:
T-561-01

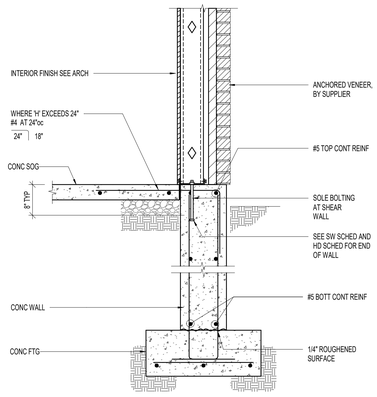

7 SE502.1 TYPICAL STEEL STUD ON CONCRETE FOUNDATION WALL
NO SCALE:
T-562-06

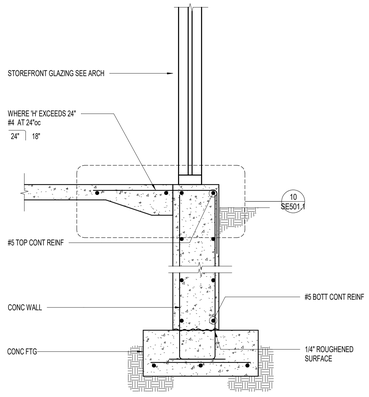

8 SE502.1 TYPICAL STEEL STUD ON CONCRETE FOUNDATION WALL
NO SCALE:
T-562-06

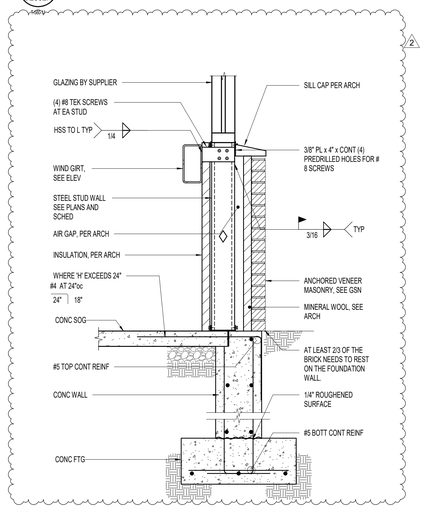

9 SE502.1 STEEL STUD ON CONCRETE FOUNDATION WALL AT WINDOW
NO SCALE:
T-562-06

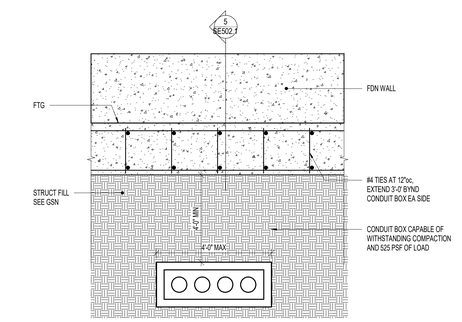

10 SE502.1 FOUNDATION SUPPORT OVER CONDUIT BOX
NO SCALE:
T-571-16

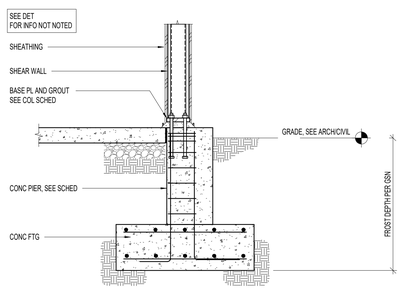

11 SE502.1 DOUBLE WALL AT COLUMN
NO SCALE:
T-560-07

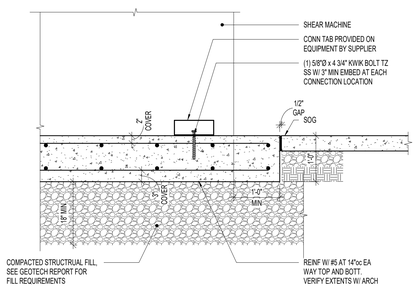

12 SE502.1 GENERATOR PAD SUPPORT DETAIL
NO SCALE:
G-0141

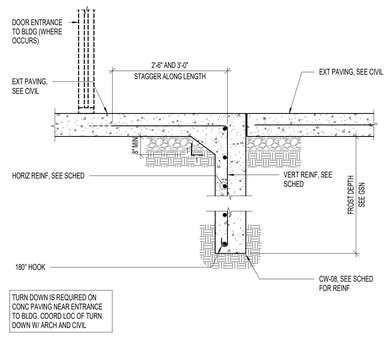

13 SE502.1 SLAB TURN DOWN AT BUILDING ENTRANCE SLAB
NO SCALE:
T-570-11

CRSA

PROJECT **240104**

ADDENDUM #5 2024-11-01

REVISIONS

NO.	DATE	DESCRIPTION
1	10/25/2024	ADD-04
2	10/28/2024	ADD-05

DTC WELDING TECH & FABRICATION BUILDING

355 SOUTH 650 EAST
KAYSVILLE, UT 84037

DAVISTECH
DAVIS TECHNICAL COLLEGE

2024-11-01
ADDENDUM #5

NOTE:
THESE STRUCTURAL DRAWINGS ARE BASED ON ARCHITECTURAL DRAWINGS DATED July 23, 2024

DIMENSIONS AND ELEVATIONS, AS THEY RELATE TO THE BUILDING IN GENERAL, i.e. GRID TO GRID DIMENSIONS OR DECK BEARING ELEVATIONS, ARE SUPPLIED BY THE ARCHITECT. THEY ARE PROVIDED ON THE STRUCTURAL PLANS AND DETAILS FOR THE CONVENIENCE OF THE CONTRACTOR. VERIFY DIMENSIONS AND ELEVATIONS WITH ARCHITECTURAL DRAWINGS.

FOOTING AND FOUNDATION DETAILS

SE502.1

(801) 355-5915

11/7/2024 3:45:54 PM

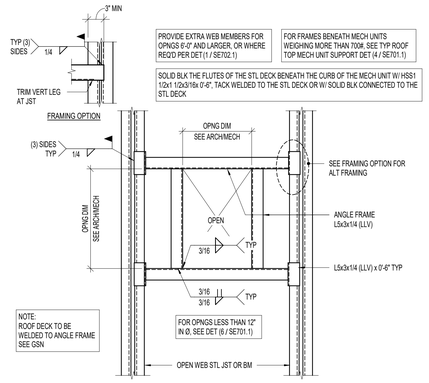

1 TYPICAL ROOF OPENING OR MECHANICAL UNIT WEIGHING LESS THAN 700#
SE701.1 NO SCALE:
1-725-01

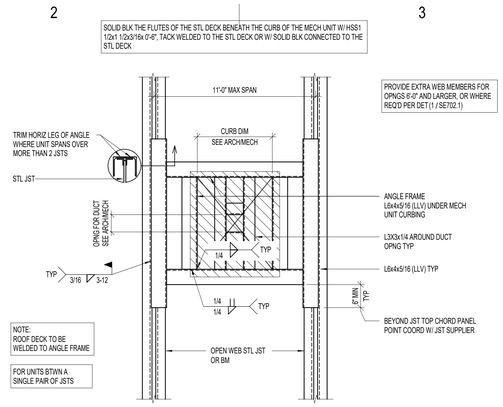

TYPICAL ROOF TOP MECHANICAL UNIT WEIGHING MORE THAN 700# BUT LESS THAN 5000#
2 SE701.1 NO SCALE:
1-725-02

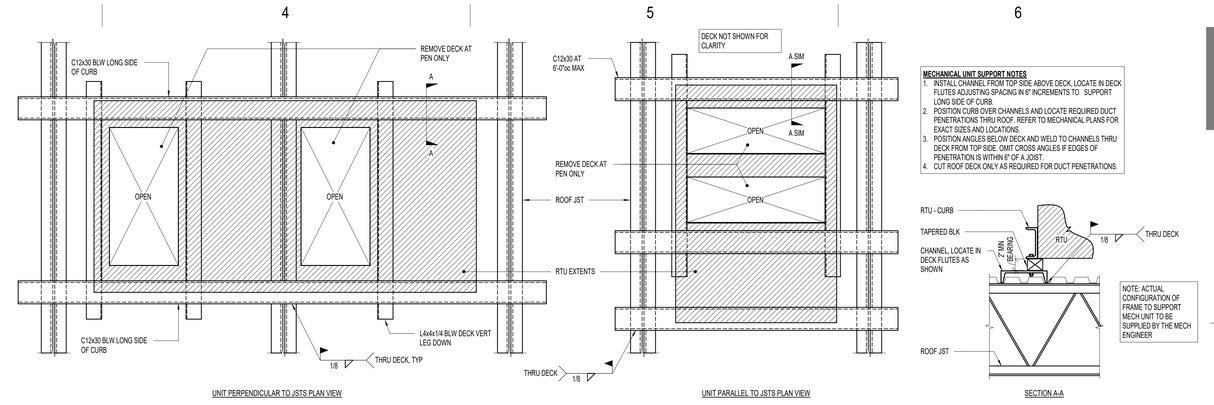

3 TYPICAL ROOF OPENING OR MECHANICAL UNITS (PLAN VIEW) MULTIPLE SPANS OR HEAVIER UNITS
SE701.1 NO SCALE:
1-725-03

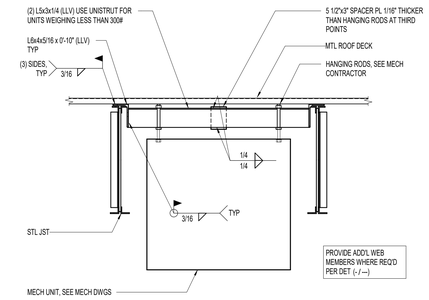

4 HANGING MECHANICAL UNIT
SE701.1 NO SCALE:
1-725-04

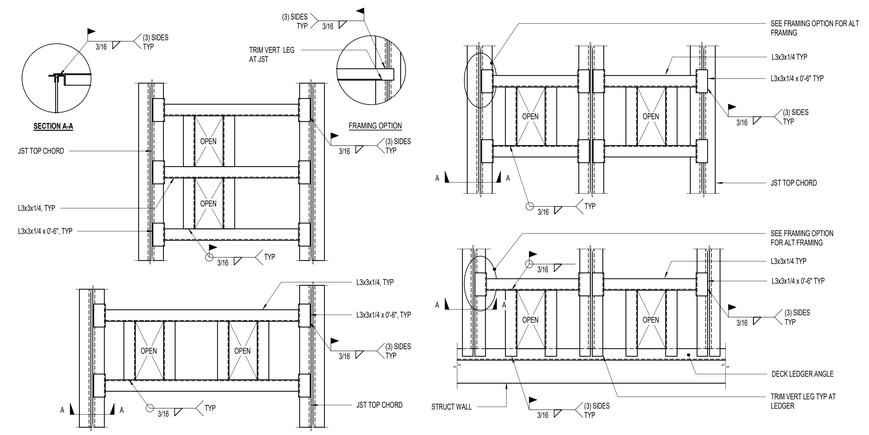

5 TYPICAL ROOF DRAIN SUPPORT (PLAN VIEW)
SE701.1 NO SCALE:
1-725-06

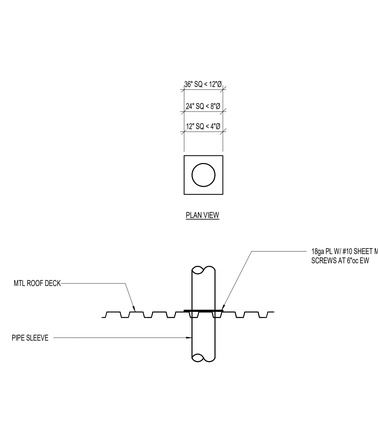

6 TYPICAL PIPE SLEEVE HOLE DETAIL (12"Ø OR LESS) THRU ROOF DECK
SE701.1 NO SCALE:
1-725-07

7 SUSPENDED LOADS FROM METAL DECK
SE701.1 NO SCALE:
1-725-08

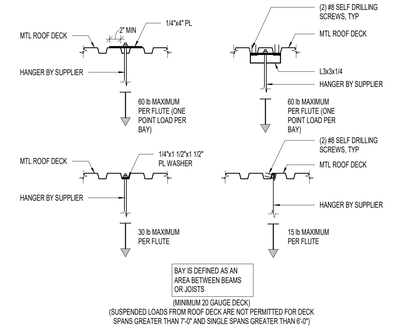

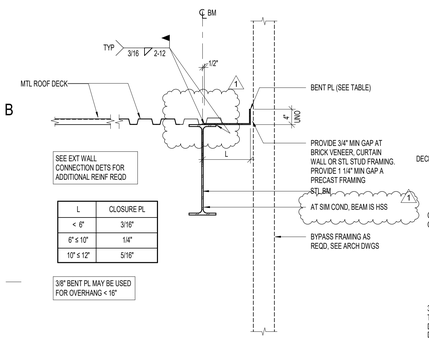

8 TYPICAL CLOSURE PLATE (OVERHANG 'L' ≤ 12")
SE701.1 NO SCALE:
1-725-03

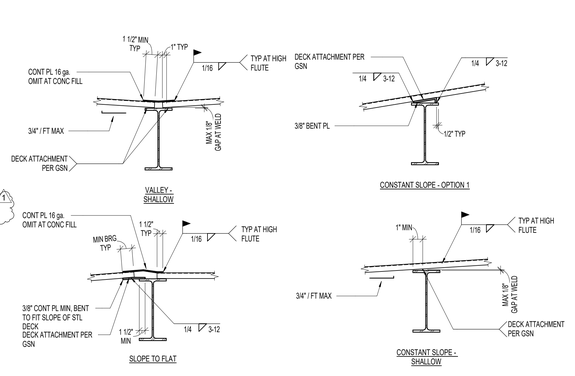

9 SUPPORT OF SLOPED STEEL DECK AT BEAMS OR JOISTS
SE701.1 NO SCALE:
1-725-30

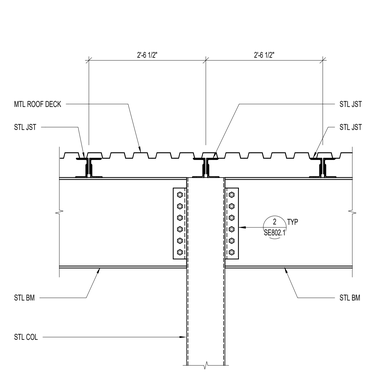

10 WIDE FLANGE BEAM TO STEEL COLUMN
SE701.1 NO SCALE:
1-725-01

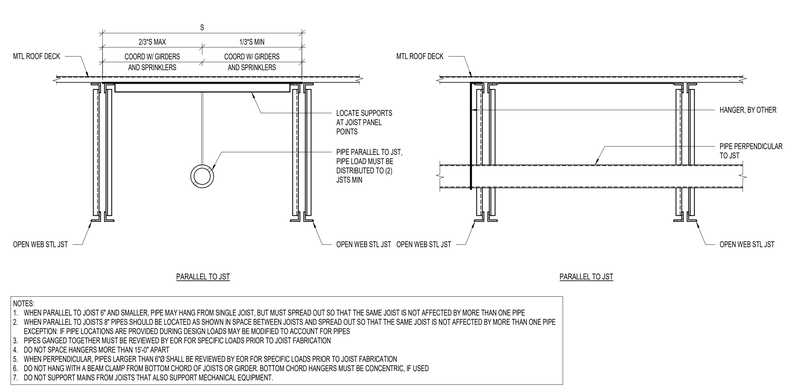

11 FIRE PROTECTION PIPE HANGER DETAIL
SE701.1 NO SCALE:

CRSA

PROJECT **240104**

BID PACKAGE #1 2024-08-26

REVISIONS

NO.	DATE	DESCRIPTION
1	10/28/2024	ADD-04

DTC WELDING TECH & FABRICATION BUILDING
355 SOUTH 650 EAST
KAYSVILLE, UT 84037

DAVISTECH
DAVIS TECHNICAL COLLEGE



2024-08-26
BID PACKAGE #1

NOTE:
THESE STRUCTURAL DRAWINGS ARE BASED ON ARCHITECTURAL DRAWINGS DATED July 23, 2024

DIMENSIONS AND ELEVATIONS, AS THEY RELATE TO THE BUILDING IN GENERAL, i.e. GRID TO GRID DIMENSIONS OR DECK BEARING ELEVATIONS, ARE SUPPLIED BY THE ARCHITECT. THEY ARE PROVIDED ON THE STRUCTURAL PLANS AND DETAILS FOR THE CONVENIENCE OF THE CONTRACTOR. VERIFY DIMENSIONS AND ELEVATIONS WITH ARCHITECTURAL DRAWINGS.

ROOF FRAMING DETAILS
SE701.1

(801) 355-5915

10/28/2024 8:33:35 AM

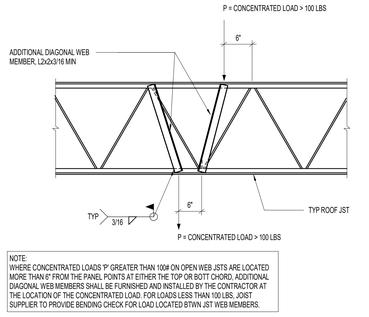

NOTE:
WHERE CONCENTRATED LOADS 'P' GREATER THAN 100# ON OPEN WEB JSTS ARE LOCATED MORE THAN 6" FROM THE PANEL POINTS AT EITHER THE TOP OR BOTT CHORD, ADDITIONAL DIAGONAL WEB MEMBERS SHALL BE FURNISHED AND INSTALLED BY THE CONTRACTOR AT THE LOCATION OF THE CONCENTRATED LOAD. FOR LOADS LESS THAN 100 LBS, JOIST SUPPLIER TO PROVIDE BENDING CHECK FOR LOAD LOCATED BTWN JST WEB MEMBERS.

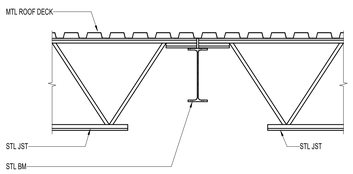

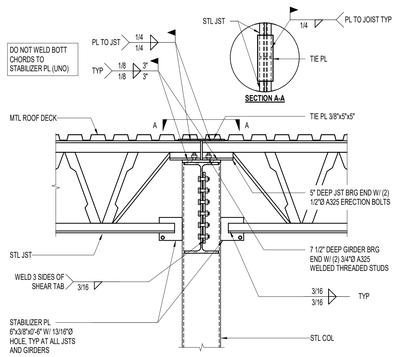

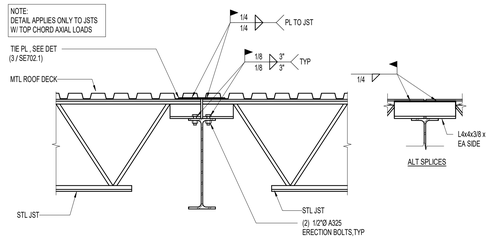

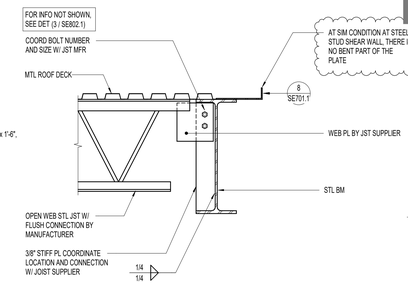

1 TYPICAL JOIST REINFORCING AT CONCENTRATED LOAD
SE702.1 — NO SCALE:

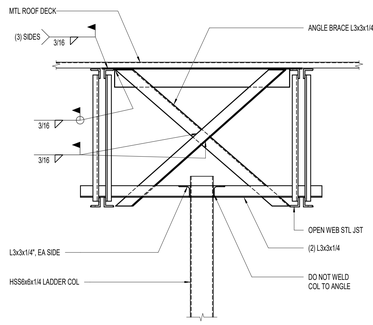

2 TYPICAL JOISTS BEARING ON STEEL BEAM
SE702.1 — NO SCALE:

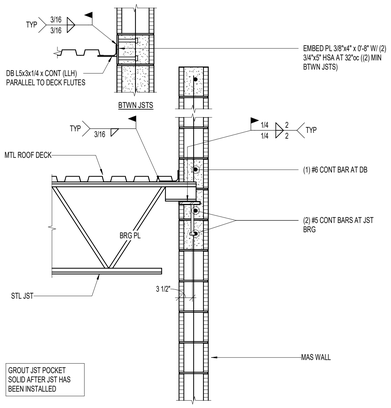

3 TYPICAL JOISTS AND GRIDER BEARING ON STEEL COLUMN WITH TIE PLATE
SE702.1 — NO SCALE:

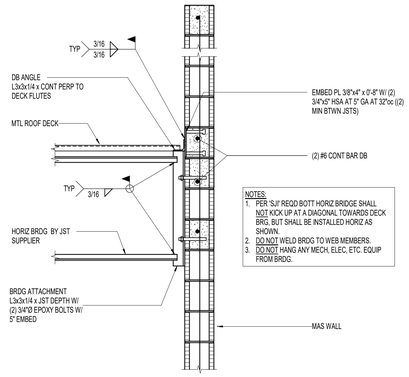

4 TYPICAL JOIST CHORD/TIE/DRAG STRUT
SE702.1 — NO SCALE:

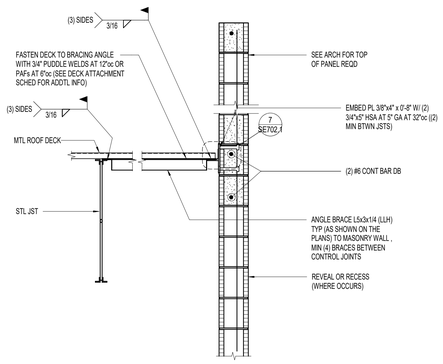

5 TYPICAL FLUSH FRAMED JOIST CONNECTION
SE702.1 — NO SCALE:

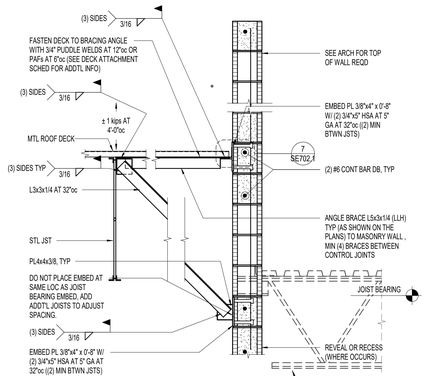

6 VERTICAL SLIP CONNECTION AT TOP OF LADDER COLUMN
SE702.1 — NO SCALE:

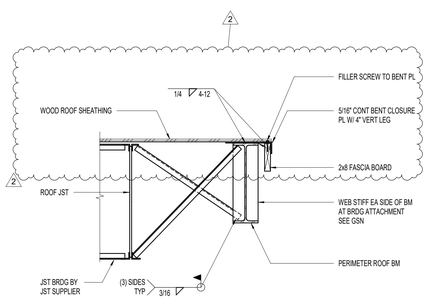

7 TYPICAL JOIST / DECK BEARING DETAIL
SE702.1 — NO SCALE:

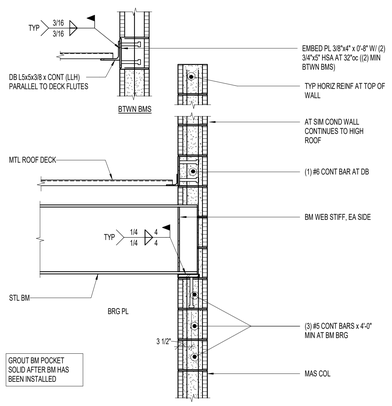

8 TYPICAL DECK BEARING WITH BRIDGING DETAIL
SE702.1 — NO SCALE:

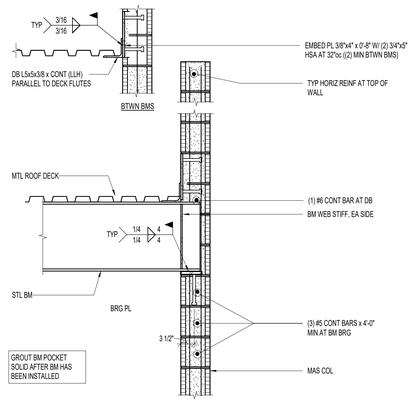

9 TYPICAL STEEL BRACE CONNECTION DETAIL TO MASONRY WALL
SE702.1 — NO SCALE:

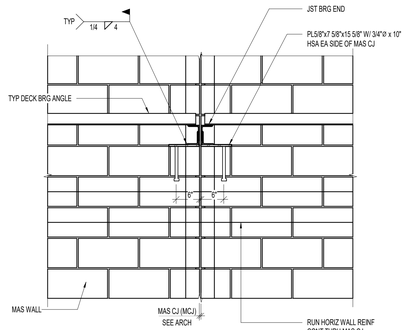

10 WALL BRACING AT CANOPY
SE702.1 — NO SCALE:

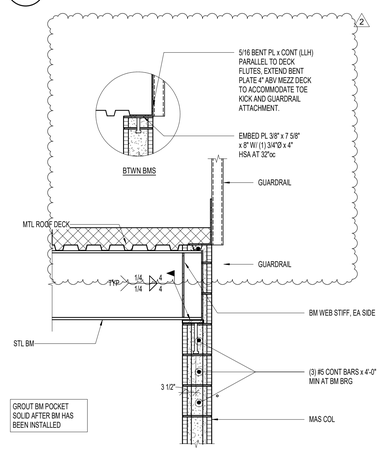

11 TYPICAL BRIDGING DETAIL
SE702.1 — NO SCALE:

12 TYPICAL BEAM / DECK BEARING DETAIL
SE702.1 — NO SCALE:

13 TYPICAL BEAM / DECK BEARING DETAIL
SE702.1 — NO SCALE:

14 JOIST BEARING AT MASONRY CONTROL JOINT DETAIL
SE702.1 — NO SCALE:

15 HSS TO HSS LATERAL MOMENT CONNECTION
SE702.1 — NO SCALE:

CRSA

PROJECT **240104**

ADDENDUM #5 2024-11-01

REVISIONS

NO.	DATE	DESCRIPTION
1	10/25/2024	ADD-04
2	10/28/2024	ADD-05

DTC WELDING TECH & FABRICATION BUILDING

355 SOUTH 650 EAST
KAYSVILLE, UT 84037

DAVISTECH
DAVIS TECHNICAL COLLEGE

2024-11-01
ADDENDUM #5

NOTE:
THESE STRUCTURAL DRAWINGS ARE BASED ON ARCHITECTURAL DRAWINGS DATED July 23, 2024

DIMENSIONS AND ELEVATIONS, AS THEY RELATE TO THE BUILDING IN GENERAL, i.e. GRID TO GRID DIMENSIONS OR DECK BEARING ELEVATIONS, ARE SUPPLIED BY THE ARCHITECT. THEY ARE PROVIDED ON THE STRUCTURAL PLANS AND DETAILS FOR THE CONVENIENCE OF THE CONTRACTOR. VERIFY DIMENSIONS AND ELEVATIONS WITH ARCHITECTURAL DRAWINGS.

ROOF FRAMING DETAILS

SE702.1

(801) 355-5915

11/17/2024 3:45:09 PM

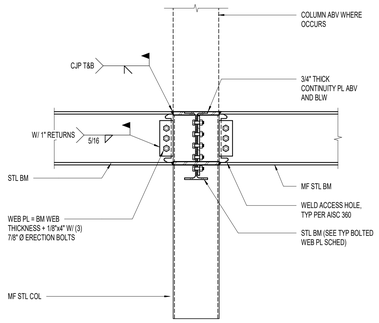

1 SE703.1 MOMENT CONNECTION AT MOMENT FRAME COLUMN
NO SCALE:
T-220-20

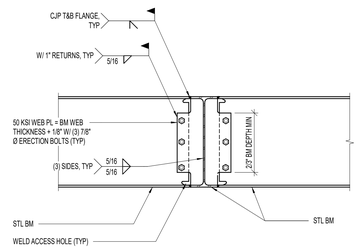

2 SE703.1 TYPICAL BEAM TO BEAM MOMENT CONNECTION THRU EQUAL DEPTH BEAM
NO SCALE:
T-435-17

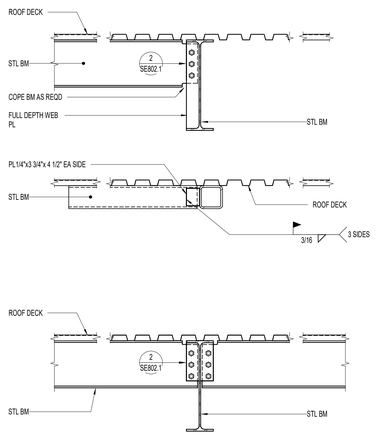

3 SE703.1 TYPICAL STEEL BEAM TO STEEL BEAM CONNECTION DETAILS
NO SCALE:
T-435-04

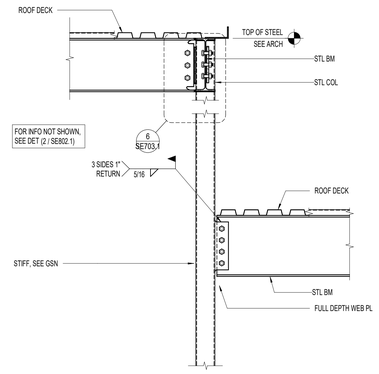

4 SE703.1 TYPICAL POP-UP STEEL CONNECTIONS AT ROOF
NO SCALE:
T-727-08

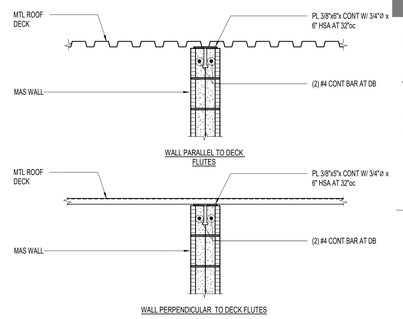

5 SE703.1 TYPICAL DECK BEARING AT MASONRY WALL
NO SCALE:
T-761-12

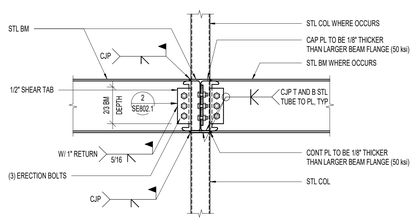

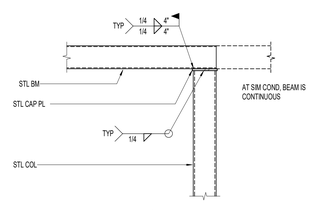

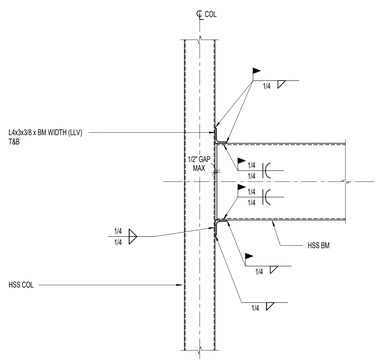

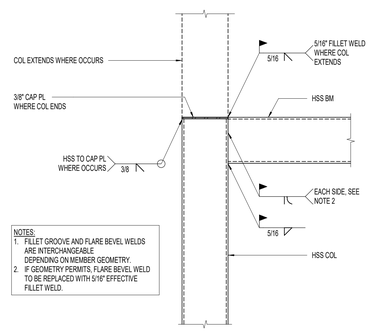

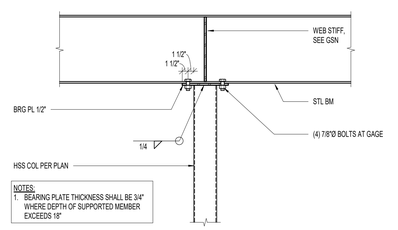

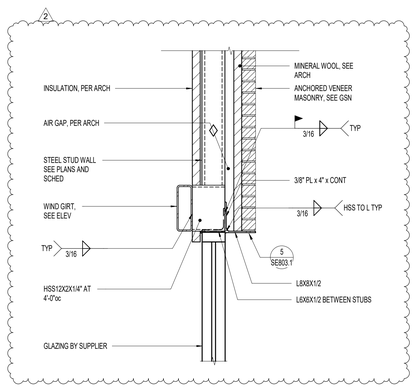

6 SE703.1 TYPICAL POP-UP STEEL BEAM TO HSS COL CONNECTION
NO SCALE:
T-722-12

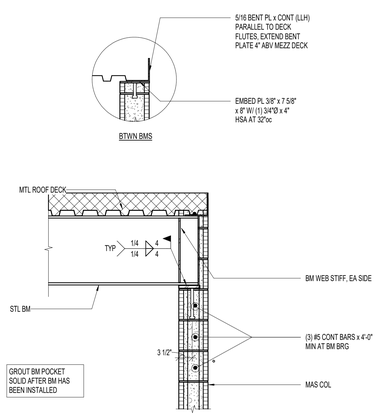

7 SE703.1 COLUMN TO BEAM CONNECTION AT FIN
NO SCALE:

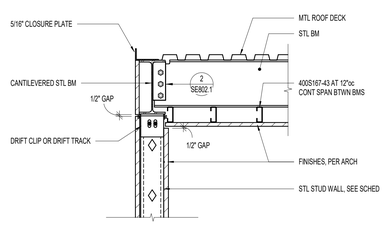

8 SE703.1 HSS BEAM TO HSS COLUMN CONNECTION
NO SCALE:
T-422-03

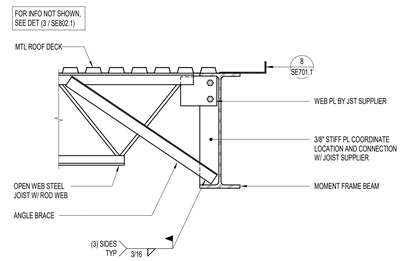

9 SE703.1 TYPICAL HSS TO HSS CONNECTION
NO SCALE:
T-422-02

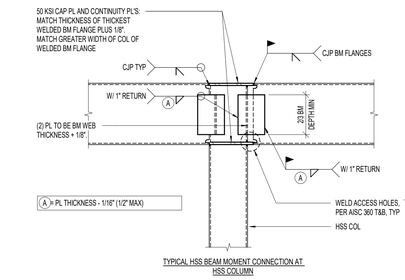

10 SE703.1 TYPICAL BEAM OVER TUBE COLUMN CONNECTION
NO SCALE:
T-435-16

11 SE703.1 LINTEL AT STEEL STUD WALL
NO SCALE:

12 SE703.1 PARTIAL HEIGHT MASONRY WALL TO BEAM CONNECTION
NO SCALE:

13 SE703.1 VESTIBULE ROOF AT FIN
NO SCALE:

14 SE703.1 MOMENT FRAME BEAM BRACE AT JOIST
NO SCALE:
T-722-04

15 SE703.1 HSS BEAM TOP AND BOTTOM FLANGE CONNECTIONS AND NOTES
NO SCALE:
T-435-21

CRSA

PROJECT **240104**

ADDENDUM #5 2024-11-01

REVISIONS

NO.	DATE	DESCRIPTION
1	10/25/2024	ADD-04
2	10/28/2024	ADD-05

DTC WELDING TECH & FABRICATION BUILDING

355 SOUTH 650 EAST
KAYSVILLE, UT 84037

DAVISTECH
DAVIS TECHNICAL COLLEGE

2024-11-01
ADDENDUM #5

NOTE:
THESE STRUCTURAL DRAWINGS ARE BASED ON ARCHITECTURAL DRAWINGS DATED July 23, 2024

DIMENSIONS AND ELEVATIONS, AS THEY RELATE TO THE BUILDING IN GENERAL, i.e. GRID TO GRID DIMENSIONS OR DECK BEARING ELEVATIONS, ARE SUPPLIED BY THE ARCHITECT. THEY ARE PROVIDED ON THE STRUCTURAL PLANS AND DETAILS FOR THE CONVENIENCE OF THE CONTRACTOR. VERIFY DIMENSIONS AND ELEVATIONS WITH ARCHITECTURAL DRAWINGS.

ROOF FRAMING DETAILS

SE703.1

(801) 355-5915

11/1/2024 3:55:00 PM

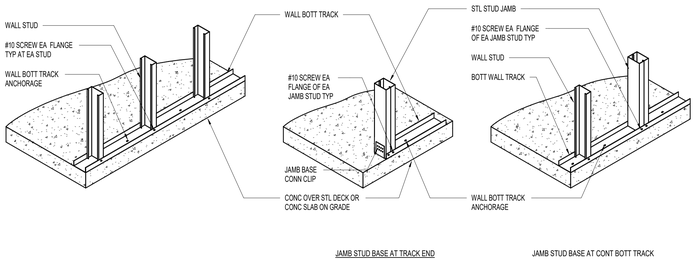

JAMB STUD BASE AT TRACK END | JAMB STUD BASE AT CONT BOTT TRACK

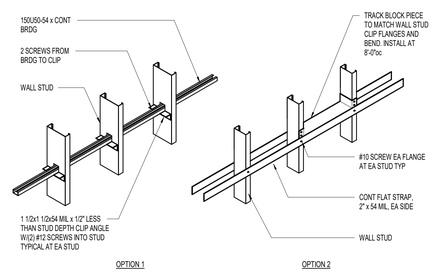

OPTION 1 | OPTION 2

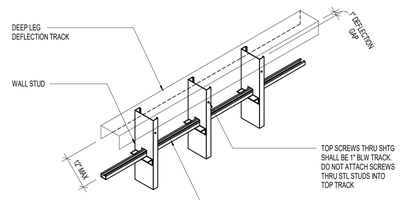

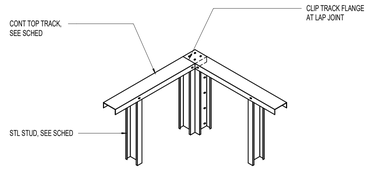

1 SE704.1 TYPICAL BOTTOM TRACK ANCHORAGE DETAILS
NO SCALE:
T-685-01

2 SE704.1 TYPICAL STEEL STUD WALL BRIDGING DETAIL
NO SCALE:
T-685-04

3 SE704.1 TYPICAL STEEL STUD WALL DEFLECTION TRACK ASSEMBLY DETAIL - SINGLE & DOUBLE TRACK
NO SCALE:
T-685-05

4 SE704.1 TYPICAL WALL FRAMING AT CORNER TRACK LAP CONNECTION
NO SCALE:
T-685-06

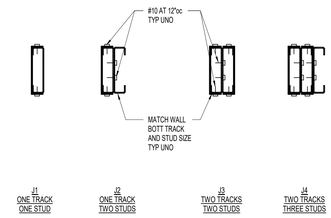

J1 ONE TRACK ONE STUD | J2 ONE TRACK TWO STUDS | J3 TWO TRACKS TWO STUDS | J4 TWO TRACKS THREE STUDS

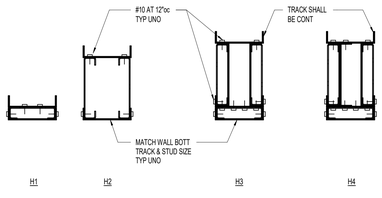

H1 | H2 | H3 | H4

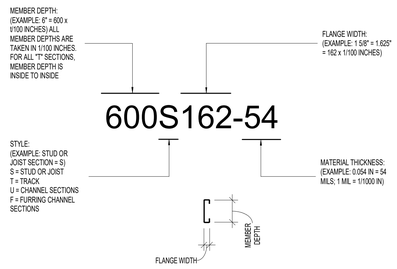

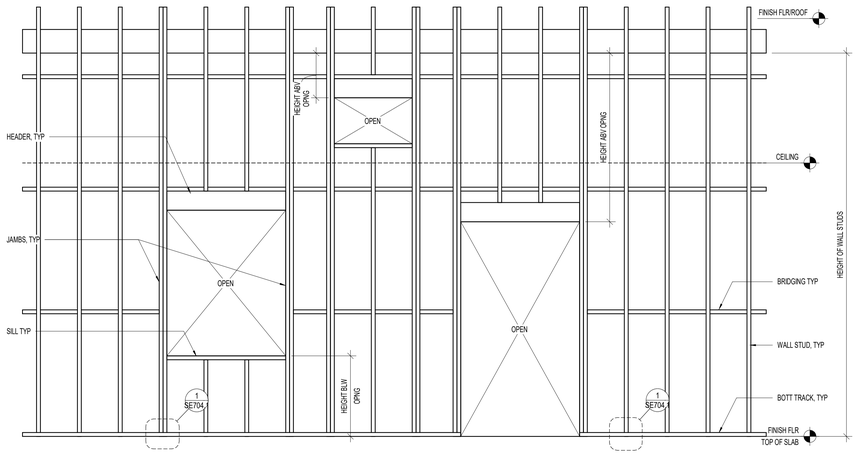

5 SE704.1 TYPICAL STEEL STUD JAMB DETAILS
NO SCALE:
T-685-10

6 SE704.1 TYPICAL STUD HEADER DETAILS
NO SCALE:
T-685-13

7 SE704.1 STEEL STUD MANUFACTURER'S ASSOCIATION NOMENCLATURE
NO SCALE:
T-685-14

8 SE704.1 TYPICAL EXTERIOR WALL OPENING FRAMING ELEVATION
NO SCALE:
T-685-15

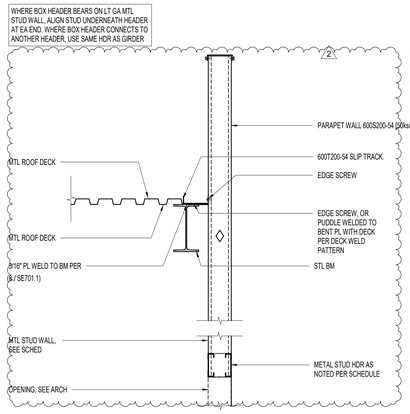

9 SE704.1 PARAPET WITH DECK PARALLEL TO WALL
NO SCALE:
T-781-01

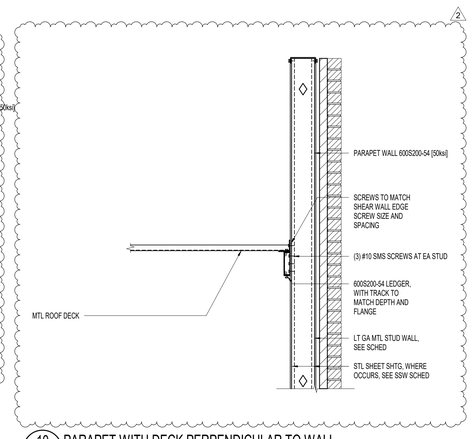

10 SE704.1 PARAPET WITH DECK PERPENDICULAR TO WALL
NO SCALE:
T-781-02

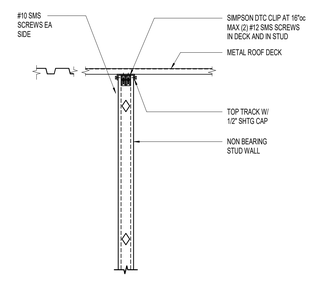

11 SE704.1 TYPICAL NON-BEARING STEEL STUD TO DECK CONNECTION
NO SCALE:

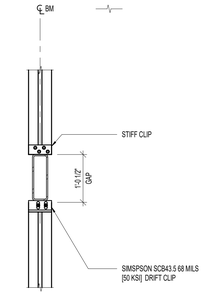

12 SE704.1 GLAZING TO HSS MEMBER CONNECTION
NO SCALE:

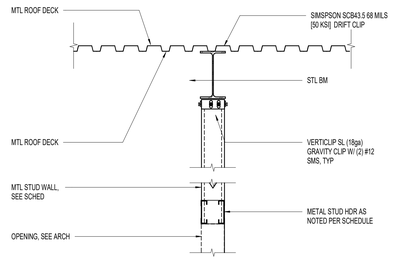

13 SE704.1 PARAPET WITH DECK PARALLEL TO WALL
NO SCALE:
T-781-01

2024-11-01
ADDENDUM #5

NOTE:
THESE STRUCTURAL DRAWINGS ARE BASED ON ARCHITECTURAL DRAWINGS DATED July 23, 2024

DIMENSIONS AND ELEVATIONS, AS THEY RELATE TO THE BUILDING IN GENERAL, i.e. GRID TO GRID DIMENSIONS OR DECK BEARING ELEVATIONS, ARE SUPPLIED BY THE ARCHITECT. THEY ARE PROVIDED ON THE STRUCTURAL PLANS AND DETAILS FOR THE CONVENIENCE OF THE CONTRACTOR. VERIFY DIMENSIONS AND ELEVATIONS WITH ARCHITECTURAL DRAWINGS.

CRSA

PROJECT **240104**

ADDENDUM #5 2024-11-01

REVISIONS

NO.	DATE	DESCRIPTION
1	10/25/2024	ADD-04
2	10/28/2024	ADD-05

DTC WELDING TECH & FABRICATION BUILDING

355 SOUTH 650 EAST
KAYSVILLE, UT 84037

DAVISTECH
DAVIS TECHNICAL COLLEGE

STEEL STUD FRAMING DETAILS

SE704.1

(801) 355-5915

11/1/2024 3:55:01 PM

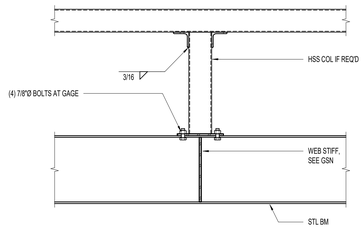

NOTES:
1. BEARING PLATE THICKNESS SHALL BE 3/4" WHERE DEPTH OF SUPPORTED MEMBER EXCEEDS 18"

1 SE705.1 TYPICAL BEAM OVER TUBE COLUMN CONNECTION
NO SCALE
T-620-16

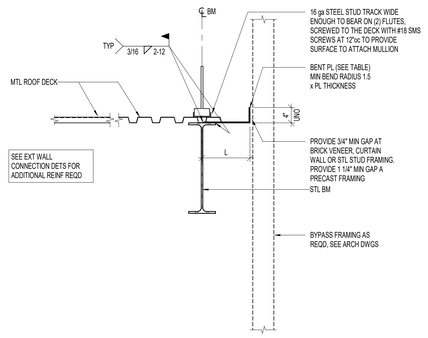

2 SE705.1 TYPICAL CLOSURE PLATE (OVERHANG "L" ≤ 12")
NO SCALE
T-720-01

CRSA

PROJECT **240104**

ADDENDUM #5 2024-11-01

REVISIONS

NO.	DATE	DESCRIPTION
1	10/28/2024	ADD-05

DTC WELDING TECH & FABRICATION BUILDING

355 SOUTH 650 EAST
KAYSVILLE, UT 84037

DAVISTECH
DAVIS TECHNICAL COLLEGE

2024-11-01
ADDENDUM #5

NOTE:
THESE STRUCTURAL DRAWINGS ARE BASED ON ARCHITECTURAL DRAWINGS DATED July 23, 2024

DIMENSIONS AND ELEVATIONS, AS THEY RELATE TO THE BUILDING IN GENERAL, i.e. GRID TO GRID DIMENSIONS OR DECK BEARING ELEVATIONS, ARE SUPPLIED BY THE ARCHITECT. THEY ARE PROVIDED ON THE STRUCTURAL PLANS AND DETAILS FOR THE CONVENIENCE OF THE CONTRACTOR. VERIFY DIMENSIONS AND ELEVATIONS WITH ARCHITECTURAL DRAWINGS.

ROOF FRAMING DETAILS

SE705.1

(801) 355-5915

11/1/2024 3:55:01 PM

CONCRETE FOOTING SCHEDULE

MARK	WIDTH	LENGTH	THICKNESS	REINFORCING CROSSWISE				REINFORCING LENGTHWISE				COMMENTS
				NO	SIZE	LENGTH	SPACING	NO	SIZE	LENGTH	SPACING	
FC2.0	2'-0"	CONT	12"					2	#5	CONT	EQ	
FC3.0	3'-0"	CONT	12"				#5	3	#5	CONT	EQ	TOP AND BOTT
FC4.0	4'-0"	CONT	12"				#5	4	#5	CONT	EQ	TOP AND BOTT
FC4.5	4'-6"	CONT	12"				#5	5	#5	CONT	EQ	TOP AND BOTT
FS3.5	3'-6"	3'-6"	12"	3	#5	3'-0"	EQ	3	#5	3'-0"	EQ	
FS4.0	4'-0"	4'-0"	12"	4	#5	3'-6"	EQ	4	#5	3'-6"	EQ	
FS5.0	5'-0"	5'-0"	13"	5	#5	4'-6"	EQ	5	#5	4'-6"	EQ	
FS6.5	6'-6"	6'-6"	17"	6	#6	6'-0"	EQ	6	#6	6'-0"	EQ	
FS7.0	7'-0"	7'-0"	18"	7	#6	6'-6"	EQ	7	#6	6'-6"	EQ	

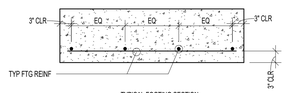

TYPICAL FOOTING SECTION

CONCRETE FOOTING NOTES:

1. PLACE ALL FOOTING REINFORCING IN BOTTOM OF FOOTING WITH 3" CLEAR CONCRETE COVER, UNLESS NOTED OTHERWISE.
2. TOP REINFORCING, WHERE SPECIFIED, SHALL BE PLACED IN THE TOP OF THE FOOTING WITH 2" MINIMUM CONCRETE COVER.
3. IF FOOTINGS ARE EARTH FORMED, FOOTING WIDTH AND LENGTH SHALL BE 6" WIDER AND LONGER THAN SCHEDULED.
4. SEE GENERAL STRUCTURAL NOTES FOR ALL OTHER REQUIREMENTS.
5. NOT ALL FOOTINGS ARE USED, SEE FOUNDATION PLAN FOR FOOTING MARKS.
6. RUN CONTINUOUS BARS IN 'FC' FOOTING THROUGH INTERSECTED 'FS' FOOTINGS, AND TO THE FAR SIDE OF INTERSECTED 'FC' FOOTINGS (NO CORNER BARS REQUIRED).
7. EXTEND CONTINUOUS FOOTINGS 1'-0" BEYOND END OF WALL, EXCEPT AT INTERSECTING CORNERS OR UNO ON PLAN.
8. FOOTINGS MAY BE THICKER THAN THE SCHEDULED DEPTH IN AREAS SURROUNDING ANCHOR BOLTS OR HOLD DOWNS, SEE ANCHORAGE AND HOLD DOWN DETAILS.
9. IN FC FOOTINGS CROSSWISE BAR SHALL BE BELOW THE LENGTHWISE BAR

TOP AND BOTT

CONCRETE WALL SCHEDULE

MARK	THICKNESS	REINFORCING		WALL TYPE	COMMENTS
		VERTICAL	HORIZONTAL TOP AND BOTTOM		
CW-08	8"	(1) #5 AT 16"oc	(1) #4 AT 12"oc	A	TYP WALL
CW-12	12"	(2) #5 AT 16"oc	(2) #4 AT 12"oc	C	AT OFFICES

CONCRETE WALL NOTES:

1. SEE GENERAL STRUCTURAL NOTES FOR COVER AND OTHER REQUIREMENTS NOT NOTED IN SCHEDULE.
2. CONCRETE WALLS NOT DESIGNATED ON THE PLANS SHALL BE REINFORCED AS FOLLOWS:

THICKNESS	VERTICAL REINFORCING	HORIZONTAL REINFORCING
6"	#4 BARS AT 18"oc	#4 BARS AT 16"oc
8"	#4 BARS AT 18"oc	#4 BARS AT 12"oc
10"	#4 BARS AT 16"oc	#5 BARS AT 15"oc
12"	#4 BARS AT 16"oc EA FACE	#4 BARS AT 16"oc EA FACE

3. PLACE STEEL IN THE CENTER OF THE WALL (EXCEPT TYPE 'B' AND RETAINING WALLS). WALLS THICKER THAN 10" SHALL HAVE TWO CURTAINS OF REINFORCEMENT (PLACED NEAR EA FACE OF THE WALL), UNLESS NOTED OTHERWISE ON THE STRUCTURAL DRAWINGS.

WALL REINFORCEMENT PLACEMENT TYPES:

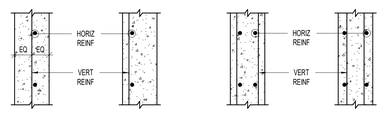

TYPE "A" TYPE "B" TYPE "C" TYPE "D"

CONCRETE PIER SCHEDULE

MARK	PIER SIZE	REINFORCING		TYPE	COMMENTS
		VERTICAL	TIES		
CP -1	30" x30"	(8) #7	(1) #3 AT 4"oc	A	AT CANOPY
CP -2	12" x18"	(4) #6	(1) #3 AT 4"oc	B	IN WALL
CP -3	12" x18"	(8) #6	(1) #3 AT 4"oc	C	IN WALL, AT CORNER

CONCRETE PIER NOTES:

1. INSTALL (3) SETS OF TIES WITHIN THE TOP 5" AT THE TOP OF ALL PIERS (UNO).
2. ALTERNATE POSITION OF HOOKS IN PLACING SUCCESSIVE SETS OF TIES.

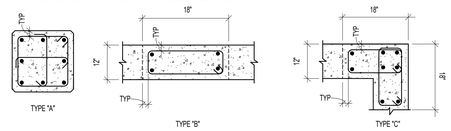

TYPE "A" TYPE "B" TYPE "C"

1 SE801.1 CONCRETE FOOTING SCHEDULE
NO SCALE:
T-01-04

2 SE801.1 CONCRETE WALL SCHEDULE
NO SCALE:
T-01-01

3 SE801.1 CONCRETE PIER SCHEDULE
NO SCALE:
T-01-04

CONCRETE REINFORCING BAR LAP SPLICE SCHEDULE

BAR SIZE	f'c = 3000 PSI				f'c = 3500 PSI				f'c = 4000 PSI				f'c = 4500 PSI				f'c = 5000 PSI				f'c = 6000 PSI			
	REGULAR CLASS		TOP CLASS		REGULAR CLASS		TOP CLASS		REGULAR CLASS		TOP CLASS		REGULAR CLASS		TOP CLASS		REGULAR CLASS		TOP CLASS		REGULAR CLASS		TOP CLASS	
	A	B	A	B	A	B	A	B	A	B	A	B	A	B	A	B	A	B	A	B	A	B	A	B
#3	17"	22"	22"	28"	16"	21"	21"	26"	15"	19"	19"	25"	14"	18"	18"	23"	13"	17"	17"	22"	12"	16"	16"	20"
#4	22"	29"	29"	38"	21"	27"	27"	36"	19"	25"	25"	33"	18"	24"	24"	31"	17"	23"	23"	29"	16"	21"	21"	27"
#5	28"	36"	36"	47"	26"	34"	34"	44"	24"	31"	31"	41"	23"	30"	30"	38"	22"	28"	28"	36"	20"	26"	26"	33"
#6	33"	43"	43"	56"	31"	40"	40"	52"	29"	37"	37"	49"	27"	35"	35"	46"	26"	34"	34"	44"	24"	31"	31"	40"
#7	48"	63"	63"	81"	45"	59"	59"	75"	42"	54"	54"	71"	40"	51"	51"	67"	38"	49"	49"	63"	34"	45"	45"	58"
#8	55"	72"	72"	93"	51"	67"	67"	82"	48"	62"	62"	81"	45"	59"	59"	76"	43"	56"	56"	72"	39"	51"	51"	66"
#9	62"	81"	81"	105"	58"	75"	75"	98"	54"	70"	70"	91"	51"	66"	66"	86"	48"	63"	63"	81"	44"	57"	57"	74"
#10	70"	91"	91"	118"	65"	85"	85"	110"	61"	79"	79"	102"	57"	74"	74"	96"	54"	71"	71"	92"	50"	64"	64"	84"
#11	78"	101"	101"	131"	73"	94"	94"	122"	67"	87"	87"	114"	64"	82"	82"	107"	60"	78"	78"	102"	55"	71"	71"	93"

NOTES:

1. THIS SCHEDULE SHALL BE USED FOR ALL SPLICES, UNLESS NOTED OTHERWISE.
2. HORIZONTAL BARS ARE CLASSIFIED AS TOP BARS WHERE 12", OR MORE, OF FRESH CONCRETE IS CAST BELOW THE REINFORCING BARS.
3. CLASS 'B' SPLICES SHALL BE USED FOR ALL SPLICES UNLESS NOTED OTHERWISE.
4. TIES AND STIRRUPS SHALL NOT BE SPLICED.
5. FOR ALL LIGHTWEIGHT CONCRETE, LAP LENGTHS SHALL BE MULTIPLIED BY 1.3.
6. FOR ALL EPOXY COATED BARS, LAP LENGTHS SHALL BE MULTIPLIED BY 1.5 FOR BARS WITH CLEAR COVER LESS THAN 3 BAR DIAMETERS OR CLEAR SPACING LESS THAN 6 BAR DIAMETERS, OTHERWISE MULTIPLY BY 1.2.
7. LAP LENGTHS SHALL BE MULTIPLIED BY 1.25 AT SHEARWALL BOUNDARY ELEMENTS.
8. DEVELOPMENT LENGTH 'Ld' IS EQUAL TO CLASS 'A' SPLICE.
9. IF REINFORCING HAS CLEAR COVER LESS THAN ONE BAR DIAMETER, LAP LENGTHS SHALL BE MULTIPLIED BY 1.5.
10. IF REINFORCING IS NOT ENCLOSED IN TIES OR STIRRUPS AND IS SPACED TIGHTER THAN 2 BAR DIAMETERS ON CENTER, LAP LENGTHS SHALL BE MULTIPLIED BY 1.5.
11. LAP LENGTHS SHALL BE MULTIPLIED BY 1.33 FOR GRADE 80 REBAR.
12. WHERE BARS OF DIFFERENT SIZES ARE LAPPED, THE SPLICE LENGTH SHALL BE THE LARGER OF 'Ld' OF THE LARGER BARS AND THE SPLICE LENGTH OF THE SMALLER BAR.

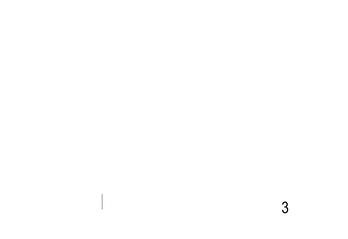

HOOKED BAR DEVELOPMENT LENGTHS, Ldh

BAR SIZE	f'c = 3000 PSI	f'c = 4000 PSI	f'c = 4500 PSI	f'c = 5000 PSI	f'c = 6000 PSI
#3	9"	8"	7"	7"	6"
#4	11"	10"	9"	9"	8"
#5	14"	12"	12"	11"	10"
#6	17"	15"	14"	13"	12"
#7	20"	17"	16"	15"	14"
#8	22"	19"	18"	17"	16"
#9	25"	22"	21"	20"	18"
#10	28"	25"	23"	22"	20"
#11	31"	27"	26"	24"	22"

NOTES:

1. FOR GRADE 80 REBAR, MULTIPLY LENGTHS BY 1.33.
2. FOR LIGHTWEIGHT CONCRETE, MULTIPLY LENGTHS BY 1.3.
3. FOR EPOXY COATED REINFORCEMENT, MULTIPLY LENGTHS BY 1.2.
4. FOR HOOKS WITH 2.5" MINIMUM SIDE COVER PERPENDICULAR TO PLANE OF HOOK, MULTIPLY LENGTHS BY 0.7.
5. FOR LATERAL LOAD RESISTING ELEMENTS, CRITICAL SECTIONS SHALL BE TAKEN AS THE FACE OF TIE / HOOP AT CONFINED CORES OF COLUMN JOINTS OR SHEAR WALL BOUNDARY ZONE.



4 SE801.1 CONCRETE REINFORCING BAR LAP SCHEDULES AND DIAGRAMS
NO SCALE:
T-01-05

9/2/2024 11:23:42 AM

CRSA

PROJECT **240104**

BID PACKAGE #1 2024-08-26

REVISIONS

NO.	DATE	DESCRIPTION
1	10/16/2024	ADD-02

REVIEWED FOR CODE COMPLIANCE
Thomas W Peterson
10/28/2024
DIVISION OF FACILITIES CONSTRUCTION AND MANAGEMENT

TECH & FABRICATION

DTC WELDING TECH & FABRICATION BUILDING
355 SOUTH 650 EAST
KAYSVILLE, UT 84037

DAVISTECH
DAVIS TECHNICAL COLLEGE

GREGORY S DUNN
08/28/2024
9027257
PROFESSIONAL STRUCTURAL ENGINEER
STATE OF UTAH

2024-08-26
BID PACKAGE #1

NOTE:
THESE STRUCTURAL DRAWINGS ARE BASED ON ARCHITECTURAL DRAWINGS DATED July 23, 2024

DIMENSIONS AND ELEVATIONS, AS THEY RELATE TO THE BUILDING IN GENERAL, i.e. GRID TO GRID DIMENSIONS OR DECK BEARING ELEVATIONS, ARE SUPPLIED BY THE ARCHITECT. THEY ARE PROVIDED ON THE STRUCTURAL PLANS AND DETAILS FOR THE CONVENIENCE OF THE CONTRACTOR. VERIFY DIMENSIONS AND ELEVATIONS WITH ARCHITECTURAL DRAWINGS.

CONCRETE SCHEDULES
SE801.1

(801) 355-5915

STEEL COLUMN SCHEDULE

STEEL COLUMN NOTES:

1. ALL ANCHOR BOLTS SHALL BE ASTM F1554 GRADE 55 (AT CONTRACTOR'S OPTION, GRADE 55 ANCHORS MAY BE SUBSTITUTED WITH GRADE 105 ANCHORS). UNLESS NOTED OTHERWISE, ALL COLUMNS SHALL BE INSTALLED WITH HEADED (OR DOUBLE NUT) ANCHOR BOLTS. PROJECT ANCHOR BOLTS 4" MINIMUM ABOVE THE TOP OF THE BASE PLATE.
2. ANCHOR BOLTS SHALL NOT BE WELDED (INCLUDING TACK WELDS).
3. IF DESIRED SPLICE LOCATIONS DIFFER FROM THOSE LEVELS SHOWN ON PLAN, NOTIFY STRUCTURAL ENGINEER PRIOR TO FABRICATION. WRITTEN APPROVAL REQUIRED.
4. ALL CAP PLATE BOLTS SHALL BE 3/4"ø BOLTS, TYPICAL UNLESS NOTED OTHERWISE.
5. ALL CAP PLATES TO BE 3/4" THICK, UNO.
7. SEE(12 / SES01.1) FOR COLUMNS WRAPPED IN CONCRETE.
8. SEE GENERAL STRUCTURAL NOTES FOR OTHER REQUIREMENTS.
9. ERECTION AIDS TO BE REMOVED AFTER COLUMN SPLICING.
10. FOR HSS14x14 AND HSS16x16 COLUMNS, ANCHOR BOLTS SHOULD BE 1" DIAMETER WITH 12" EMBEDS W/ 3/8"x3" PLATE WASHERS. FOR HSS 12x12 COLUMNS OR SMALLER, ANCHOR BOLTS SHOULD BE 3/4"ø WITH 8" EMBEDS WITH 1/4"x2" PLATE WASHERS. FOR HSS10x10 COLUMNS OR SMALLER HSS COLUMNS, ASTM F1554 GRADE 36 RODS MAY BE SUBSTITUTED.
11. OVERSIZED HOLES MAY BE USED IN BASE PLATES PROVIDED THEY DO NOT EXCEED THE FOLLOWING SIZES:
    - 3/4"ø BOLT ≤ 1 1/16"ø
    - 1"ø BOLT ≤ 1 1/2"ø
    - 1 1/4" ø BOLT ≤ 1 7/8"ø
    - 1 1/2" ø BOLT ≤ 2 1/4"ø
12. HOLES IN PLATE WASHERS SHOULD BE 1/16" GREATER THAN BOLT DIMENSION.
13. NON-SHRINK GROUT UNDER BASE PLATES SHALL BE 1 1/2" THICK UNO.
14. COLUMN LOCATIONS SHOWN ON SCHEDULE ARE APPROXIMATE. PLEASE SEE ARCHITECTURAL DRAWINGS FOR EXACT LOCATIONS.
15. DO NOT WELD IN WIDE FLANGE "K" ZONES. WELDS ARE NOT REQUIRED AT "K" ZONES.
16. WELDING OF PLATE WASHERS TO BASE PLATES MAY BE OMITTED AT SINGLE STORY COLUMNS AND HSS 8x8 COLUMNS OR SMALLER.

(A) = PLATE WASHER THICKNESS - 1/16" (MAX WELD SIZE 5/16")

(A) = 2" FOR HSS16x16 OTHERWISE 1".

17. SINGLE STORY COLUMNS DO NOT NEED TO HAVE PLATE WASHERS WELDED TO BASE PLATES.

BASE PL LEGEND:

'co' = 1/2" MINIMUM
'ed' = 2" MINIMUM
'bc' = 3" MINIMUM

CAP PL LEGEND:

'co' = 1/2" MINIMUM
'ed' = 1 1/2" MINIMUM
'bc' = BEAM OR GIRDER GAGE
'w' = BEAM OR GIRDER GAGE + 3"
OR
BEAM OR GIRDER FLANGE WIDTH + 1"
OR
COLUMN DEPTH + 1"
WHICHEVER IS GREATER
'H' = BEAM OR GIRDER GAGE + 3"
OR
BEAM OR GIRDER FLANGE WIDTH + 1"
OR
COLUMN WIDTH + 1"
WHICHEVER IS GREATER

STEEL COLUMN BASE PLATE TYPES:

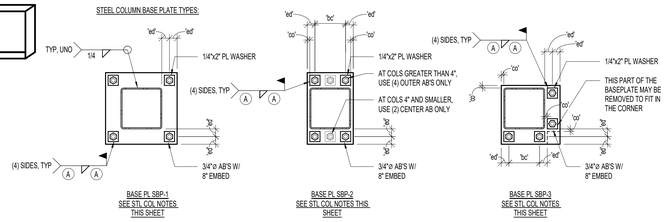

BASE PL SBP-1
SEE STL COL NOTES THIS SHEET

BASE PL SBP-2
SEE STL COL NOTES THIS SHEET

BASE PL SBP-3
SEE STL COL NOTES THIS SHEET

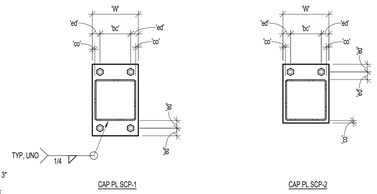

CAP PL SCP-1

CAP PL SCP-2

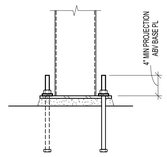

BASE PL ELEVATION

1 SE802.1 STEEL COLUMN SCHEDULE FOR SEISMIC DESIGN CATEGORIES C THRU F

NO SCALE:

T-SES-02

A-325 BOLT SCHEDULE

MAXIMUM BEAM SIZE IN EACH BEAM DEPTH GROUP	A-325N BOLTS	
	No. PER BEAM	SIZE
W8	2	7/8"Ø
W10	2	7/8"Ø
W12	3	7/8"Ø
W14	3	7/8"Ø
W16	4	7/8"Ø
W18	5	7/8"Ø
W21	6	7/8"Ø
W24	6	7/8"Ø
W27	7	7/8"Ø

(1) CLIP ANGLES: L5x3 1/2. THICKNESS SHALL BE EQUAL TO ONE HALF THE BEAM WEB THICKNESS PLUS 1/16" (1/4" MIN). FOR TWO ROWS OF BOLTS OR SKEWED CONNECTIONS, USE BENT PLATES. WHERE COLUMN WIDTH IS SMALLER THAN THE CONNECTING CLIP ANGLES, ANGLE LEGS SHALL BE REDUCED TO MATCH WIDTH OF COLUMN.

(2) BEAM WEB CONNECTION PLATE THICKNESS EQUALS
3/8" MINIMUM THICK FOR W18 BEAMS OR SMALLER
1/2" MINIMUM THICK FOR W21 BEAMS OR LARGER
3/4" MINIMUM THICK FOR BEAMS WITH WEB GREATER THAT 1" THICK

(3) FILLET WELDS SHALL BE AS FOLLOWS:
1/4" FOR 3/8" PLATES
5/16" FOR 1/2" PLATES
7/16" FOR 3/4" PLATES

(4) THICKNESS EQUALS BEAM FLANGE THICKNESS OF BEAM FRAMING INTO COLUMN WEB (3/8" MINIMUM).

(5) BOLT EDGE DISTANCE SHALL BE 1 1/2" MINIMUM AT ALL EDGES. BOLT SPACING SHALL BE AT 2". BOLT SPACING MAY BE REDUCED TO 3x THE BOLT DIAMETER IF IT IS REQUIRED FOR A SINGLE ROW OF BOLTS. A SINGLE ROW OF BOLTS IS PREFERRED.

(6) WHEN MORE THAN ONE COLUMN OF BOLTS IS NEEDED, THE FIRST COLUMN SHALL BE COMPLETE WITH THE REMAINDER OF THE BOLTS PLACED IN THE SECOND COLUMN.

(7) 1/2" PLATE THICKNESS + 5/16"

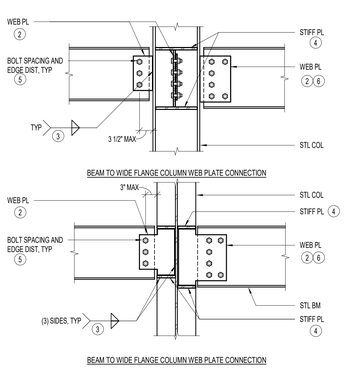

BEAM TO WIDE FLANGE COLUMN WEB PLATE CONNECTION

BEAM TO WIDE FLANGE COLUMN WEB PLATE CONNECTION

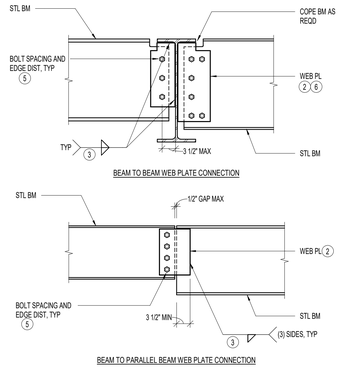

BEAM TO BEAM WEB PLATE CONNECTION

BEAM TO PARALLEL BEAM WEB PLATE CONNECTION

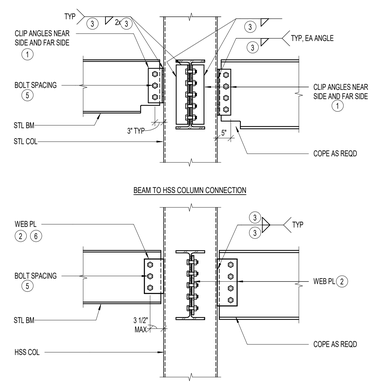

BEAM TO HSS COLUMN CONNECTION

BEAM TO HSS COLUMN CONNECTION

ALTERNATE BEAM TO HSS COLUMN CONNECTION

(THIS DETAIL MAY BE USED AS AN ALTERNATE AT LOCATIONS WHERE THE WEB PLATE THICKNESS DOES NOT EXCEED 1.6 TIMES THE COLUMN WALL THICKNESS.)
(THIS DETAIL MAY NOT BE USED AT THE FOLLOWING COLUMN SIZES.
HSS16x16x3/8, HSS16x16x5/16
HSS14x14x5/16, HSS12x12x5/16
HSS12x12x1/4, HSS10x10x1/4

2 SE802.1 TYPICAL BOLTED WEB PLATE CONNECTIONS WITH BOLT SCHEDULE (SINGLE SHEAR)

NO SCALE:

T-SES-04

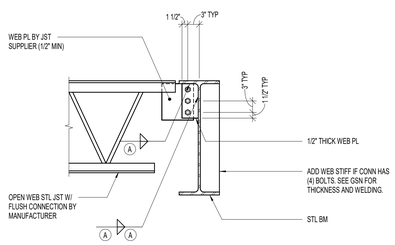

FLUSH FRAME OPEN WEB STEEL JOIST TO BEAM CONNECTION SCHEDULE

LH SIZE	NUMBER OF BOLTS	SIZE OF WELD (A)	LENGTH OF WELD (B)
18LH to 20LH	2	3/16	4
24LH TO 32LH	3	3/16	6
36LH TO 48LH	4	3/16	9

1. THE ABOVE SCHEDULE IS BASED OFF HIGHEST CATALOG VALUES. IF LOADING EXCEEDS THAT OF THE CATALOG OR IS A SPECIAL JOIST TYPE, THE ABOVE VALUES DO NOT APPLY.
2. SCHEDULE VALUES AND CAPACITIES BASED ON T1870 A325 BOLTS.
3. CONTRACTOR TO COORDINATE CONNECTION BETWEEN JOIST SUPPLIER AND STEEL SUPPLIER.

3 SE802.1 TYPICAL FLUSH FRAMED JOIST CONNECTION

NO SCALE:

T-SES-06

8/20/2024 4:15:38 PM

CRSA

PROJECT **240104**

BID PACKAGE #1 2024-08-26

REVISIONS

NO.	DATE	DESCRIPTION

REVIEWED FOR CODE COMPLIANCE
Thomas W Peterson
10/28/2024
DIVISION OF FACILITIES CONSTRUCTION AND MANAGEMENT

DTC WELDING TECH & FABRICATION BUILDING

355 SOUTH 650 EAST
KAYSVILLE, UT 84037

DAVISTECH
DAVIS TECHNICAL COLLEGE

GREGORY S. PENNY
08/28/2024
9027257
STATE OF UTAH

2024-08-26
BID PACKAGE #1

NOTE:
THESE STRUCTURAL DRAWINGS ARE BASED ON ARCHITECTURAL DRAWINGS DATED July 23, 2024

DIMENSIONS AND ELEVATIONS, AS THEY RELATE TO THE BUILDING IN GENERAL, i.e. GRID TO GRID DIMENSIONS OR DECK BEARING ELEVATIONS, ARE SUPPLIED BY THE ARCHITECT. THEY ARE PROVIDED ON THE STRUCTURAL PLANS AND DETAILS FOR THE CONVENIENCE OF THE CONTRACTOR. VERIFY DIMENSIONS AND ELEVATIONS WITH ARCHITECTURAL DRAWINGS.

STEEL SCHEDULES

SE802.1

(801) 355-5915

MASONRY WALL SCHEDULE

MARK	THICKNESS	MATERIALS	SOLID GROUT	REINFORCING			
				VERTICAL	HORIZONTAL	TYPE	JOINT REINF
MW-08	8"	CMU	NO	SEE MAS WALL ELEV	SEE MAS WALL ELEV	A	NO

MASONRY WALL NOTES:

1. COORDINATE WITH ARCHITECTURAL DRAWINGS, MASONRY WALL FINISHES, TYPES OF MATERIAL, COURSING, ETC.
2. DO NOT SOLID GROUT WALLS UNLESS NOTED OTHERWISE.
3. ALL MASONRY BELOW GRADE SHALL BE GROUTED SOLID.
4. VERTICAL REINFORCING SHALL BE CENTERED IN THE WALL UNLESS NOTED OTHERWISE.
5. PROVIDE (1) VERTICAL BAR MINIMUM AT ALL CORNERS AND END OF WALLS.
6. HORIZONTAL WALL REINFORCING SHALL BE PLACED BETWEEN VERTICAL MASONRY COLUMN REINFORCING BARS.
7. HORIZONTAL WALL REINFORCING SHALL CONTINUE THRU MASONRY LINTELS. WHERE BOTH HORIZONTAL WALL REINFORCING AND LINTEL REINFORCING OCCUR IN THE SAME COURSE, USE THE LARGER REINFORCING.
8. HORIZONTAL WALL REINFORCEMENT SPACING SHALL NOT EXCEED 48"oc. IN SPECIAL REINFORCED MASONRY SHEAR WALLS, MAX. SPACING OF HORIZONTAL AND VERTICAL BARS SHALL NOT EXCEED THE LESSER OF 48", OR WALL LENGTH / 3, OR WALL HEIGHT / 3.
9. MASONRY WALLS NOT DESIGNATED ON THE PLANS SHALL BE REINFORCED AS FOLLOWS:
10. IF JOINT REINFORCING IS REQUIRED, PROVIDE 3/16" DIAMETER GALVANIZED LADDER TO TRUSS TYPE REINFORCING.

THICKNESS	VERTICAL REINFORCING	HORIZONTAL REINFORCING
6"	#5 BARS AT 32"oc	#4 BARS AT 48"oc
8"	#5 BARS AT 32"oc	#5 BARS AT 48"oc
10"	#6 BARS AT 32"oc	#6 BARS AT 48"oc
12"	#6 BARS AT 32"oc	(2) #5 BARS AT 48"oc

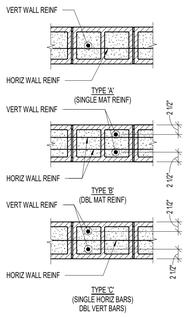

MASONRY LINTEL SCHEDULE

MARK	LINTEL DEPTH	LINTEL SPAN (MAX)	REINFORCING		COMMENTS
			HORIZONTAL	STIRRUPS	
ML-1	16"	6' - 0"	(1) #7BAR CONT T&B	NONE	—
ML-1A	16"	6' - 0"	(1) #6BAR CONT T&B	#4 AT 8"oc	EXTRACTION DUCTS
ML-2	24"	8' - 0"	(1) #7BAR CONT T&B	#4 AT 8"oc	—
ML-3	32"	10' - 0"	(1) #7BAR CONT T&B	#4 AT 8"oc	—
ML-4	48"	16' - 0"	(1) #7BAR CONT T&B	#4 AT 8"oc	—

MASONRY LINTEL NOTES:

1. LINTEL WIDTH AND MATERIAL TYPES SHALL BE THE SAME AS THE WALL IN WHICH THE LINTEL IS CONSTRUCTED.
2. GROUT MASONRY LINTELS MONOLITHICALLY WITH THE SUPPORT WALL OR COLUMN AT EA END.
3. MASONRY LINTELS ML-1 THRU ML-4 SHALL BE USED OVER OPENINGS IN MASONRY WALLS WHEN A SPECIFIC MASONRY LINTEL IS NOT OTHERWISE SPECIFIED. WHEN A LINTEL IS SPECIFIED ON THE PLANS, THE MAXIMUM SPAN AS NOTED IN THIS SCHEDULE SHALL NOT APPLY. CONSULT THE STRUCTURAL ENGINEER FOR LINTELS NOT SPECIFIED ON THE PLANS WHICH HAVE A SPAN GREATER THAN 10'-0".
4. MASONRY LINTELS ML-1 THRU ML-4 SHALL NOT BE LOCATED DIRECTLY BELOW FLOOR OR ROOF BEAMS OR GIRDERS UNLESS NOTED OTHERWISE ON THE PLANS. JOISTS SHALL NOT BEAR ON ANY LINTEL LESS THAN 16" DEEP. CONSULT THE STRUCTURAL ENGINEER FOR LINTELS NOT SHOWN ON THE PLANS WHICH ARE LOCATED DIRECTLY BELOW FLOOR OR ROOF BEAMS OR GIRDERS.
5. EXTEND ALL HORIZONTAL REINFORCING BEYOND THE EDGE OF ALL OPENINGS. IF HORIZONTAL REINFORCING CANNOT EXTEND LAP SPLICE LENGTH BEYOND EDGE OF OPENING, PROVIDE 90° STANDARD HOOK.
6. SPLICE TOP BARS AT MID-SPAN OF LINTEL ONLY AND BOTTOM BARS OVER SUPPORTS ONLY.
7. HORIZONTAL WALL REINFORCING SHALL CONTINUE THRU MASONRY LINTELS. WHERE BOTH HORIZONTAL WALL REINFORCING AND LINTEL REINFORCING OCCUR IN THE SAME COURSE, USE THE LARGER REINFORCING.
8. DOWEL VERTICAL REINFORCING OF WALL ABOVE LINTEL INTO THE FULL DEPTH OF LINTEL.
9. SEE GENERAL STRUCTURAL NOTES FOR ADDITIONAL REQUIREMENTS.

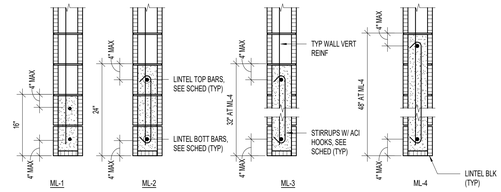

1 MASONRY WALL SCHEDULE

SE803.1 — NO SCALE:

T-860-01

MASONRY COLUMN SCHEDULE

MARK	COLUMN SIZE	REINFORCING		
		VERTICAL	TIES	TYPE
MC-1	8" x 16"	(4) #4	#3 AT 8"oc	1
MC-2	8" x 24"	(6) #4	#3 AT 8"oc	2
MC-3	8" x 32"	(8) #4	#3 AT 8"oc	3
MC-4	8" x 40"	(10) #4	#3 AT 8"oc	4
MC-5	8" x 48"	(12) #4	#3 AT 8"oc	5

MASONRY COLUMN NOTES:

1. HORIZONTAL WALL REINFORCEMENT SHALL BE LOCATED TO THE INSIDE OF VERTICAL BARS. THE CENTERLINE OF VERTICAL BARS SHALL BE LOCATED 2 1/2" FROM FACE OF THE MASONRY.
2. VERTICAL REINFORCING AND TIES SHALL EXTEND TO FULL WALL HEIGHT, UNO.
3. VERTICAL MASONRY COLUMN REINFORCING SHALL EXTEND INTO FOOTING AND TERMINATE WITH A STANDARD 90° HOOK. FOR CONCRETE FOUNDATION WALLS OVER 5'-0" TALL, VERTICAL COLUMN REINFORCING SHALL DOWEL 4'-0" MINIMUM INTO THE FOUNDATION WALL.
4. IN CONCRETE FOUNDATION WALLS, VERTICAL MASONRY COLUMN REINFORCING SHALL BE TIED WITH #3 TIES AT THE SAME SPACING AND CONFIGURATION AS MASONRY COLUMNS ABOVE.
5. #3 TIES MAY BE SUBSTITUTED WITH #2 TIES IN SEISMIC DESIGN CATEGORIES A, B AND C.

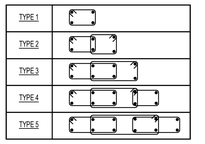

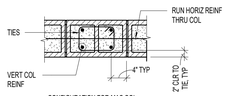

CONFIGURATION FOR MAS COL

3 MASONRY COLUMN SCHEDULE

SE803.1 — NO SCALE:

T-860-04

2 MASONRY LINTEL SCHEDULE

SE803.1 — NO SCALE:

T-860-02

MASONRY REINFORCING BAR LAP SPLICE SCHEDULE

REBAR SIZE	SINGLE BAR CENTERED IN CELL															
	THICKNESS			THICKNESS			THICKNESS			THICKNESS			THICKNESS			
	8"	10"	12"	8"	10"	12"	8"	10"	12"	8"	10"	12"	8"	10"	12"	
	f'm = 2000psi			f'm = 2500psi			f'm = 3000psi			f'm = 3500psi			f'm = 4000psi			
#3	12"			12"			12"			12"			12"			
#4	13"	12"		12"			12"			12"			12"			
#5	20"	16"	13"	18"	14"	12"	16"	13"	12"	15"	12"		14"	12"		
#6	38"	29"	24"	34"	26"	21"	31"	24"	20"	29"	22"	18"	27"	21"	17"	
#7	52"	40"	33"	47"	36"	29"	42"	33"	27"	39"	30"	25"	37"	29"	23"	
#8 *	72"	61"	50"	71"	55"	45"	65"	50"	41"	60"	46"	38"	56"	43"	35"	
#9 *	81"	78"	64"	81"	70"	57"	81"	64"	52"	78"	59"	48"	73"	56"	45"	
FLUSH WALL PILASTER OR COLUMN, TWO BARS IN EA CELL																
#3	13"			12"			12"			12"			12"			
#4	22"			20"			18"			17"			16"			
#5	35"			31"			28"			26"			25"			
#6	54"			54"			53"			49"			46"			
#7	63"			63"			63"			63"			62"			
#8 *	72"			72"			72"			72"			72"			
#9 *	81"			81"			81"			81"			81"			

MASONRY REINFORCING BAR LAP SPLICE NOTES:

1. MECHANICAL SPLICES ARE REQUIRED FOR BARS IN MASONRY GREATER THAN #9 BARS.
2. MECHANICAL SPLICES MAY BE USED IN LIEU OF LAP SPLICES SHOWN.
3. MECHANICAL SPLICES SHALL DEVELOP 125% OF SPECIFIED YIELD STRENGTH OF BAR.
4. MASONRY DEVELOPMENT LENGTHS SHOWN SHALL BE INCREASED BY 50% WHERE REBAR IS COATED WITH EPOXY.

* BARS MAY DIFFICULT TO LAP SPLICE DUE TO CONGESTION. COUPLERS RECOMMENDED.

4 MASONRY REINFORCING BAR LAP SPLICE SCHEDULE

SE803.1 — NO SCALE:

T-860-05

STEEL ANGLE LINTEL SCHEDULE (NON-STRUCTURAL)

CLEAR OPENING	(VERT x HORIZ x THICKNESS)
UP TO 5'-0"	3 1/2" x 3" x 1/4"
5'-1" TO 7'-0"	3 1/2" x 3 1/2" x 1/4"
7'-1" TO 9'-0"	5" x 3 1/2" x 1/4"
9'-1" TO 10'-0"	5" x 3 1/2" x 5/16"
10'-1" TO 11'-0"	5" x 3 1/2" x 3/8"
11'-1" TO 12'-0"	6" x 4" x 3/8"
12'-1" AND OVER	SEE DETAIL (11 / SE703.1)

NOTE:

1. LINTELS CARRY VENEER ONLY. WHERE FLOORS, ROOFS OF CONCENTRATED LOADS OCCUR, FURTHER ANALYSIS IS NECESSARY.
2. PROVIDE 1" OF BEARING EA END FOR EA FOOT OF SPAN. MINIMUM BEARING OF 6" EA SIDE OF OPENING.
3. USE THIS SCHEDULE UNLESS NOTED OTHERWISE.
4. LINTELS ARE TO BE GALVANIZED.

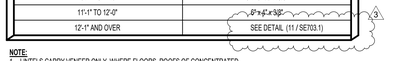

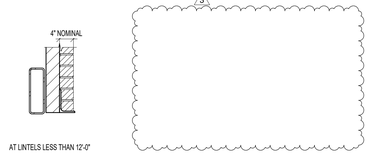

AT LINTELS LESS THAN 12'-0"

5 STEEL ANGLE LINTEL SCHEDULE (NON-STRUCTURAL)

SE803.1 — NO SCALE:

T-861-03

CRSA

PROJECT **240104**

ADDENDUM #5 2024-11-01

REVISIONS

NO.	DATE	DESCRIPTION
1	9/16/2024	ADD-02
2	10/17/2024	ADD-03
3	10/28/2024	ADD-05

DTC WELDING TECH & FABRICATION BUILDING

355 SOUTH 650 EAST
KAYSVILLE, UT 84037

DAVISTECH
DAVIS TECHNICAL COLLEGE

2024-11-01
ADDENDUM #5

NOTE:
THESE STRUCTURAL DRAWINGS ARE BASED ON ARCHITECTURAL DRAWINGS DATED July 23, 2024

DIMENSIONS AND ELEVATIONS, AS THEY RELATE TO THE BUILDING IN GENERAL, i.e. GRID TO GRID DIMENSIONS OR DECK BEARING ELEVATIONS, ARE SUPPLIED BY THE ARCHITECT. THEY ARE PROVIDED ON THE STRUCTURAL PLANS AND DETAILS FOR THE CONVENIENCE OF THE CONTRACTOR. VERIFY DIMENSIONS AND ELEVATIONS WITH ARCHITECTURAL DRAWINGS.

MASONRY SCHEDULES

SE803.1

(801) 355-5915

11/7/2024 3:50:05 PM

LIGHT GAUGE STUDWALL SCHEDULE

MARK	SIZE AND SPAN (1)	TOP & BOTT TRACK	LOAD DISTRIBUTION MEMBER	LOCATION (UNO)	BRIDGING CLIP AT EA STUD
SS-6	S600S200-68 AT 16"oc	600T200-54	(2) 600S200-54	ALL WALLS UNO	BCBCBB150

NOTES:

1. ALL NON-BEARING WALLS 400/600S125-33 (33) AT 16"oc, TYPICAL UNO.
2. ALL TRACKS SHALL BE 400/600T150-54 (50), TYPICAL UNO.
3. SEE SHEAR WALL SCHEDULE FOR SHEAR WALL SHEATHING, STUD THICKNESS, AND ATTACHMENTS.
4. ATTACH ALL TRACKS TO EACH STUD AT EACH STUD FLANGE WITH #10 SCREWS.
5. ATTACH ALL LOAD DISTRIBUTION MEMBERS TO TOP TRACK WITH #10 SCREWS AT 16"oc
6. ATTACH ALL LOAD DISTRIBUTION MEMBERS TO FLOOR/ROOF DECK WITH (2) #10 SCREWS AT 12"oc. TYPICAL AT DECK PERPENDICULAR TO WALL AND (2) #10 SCREWS AT 16"oc TYPICAL AT DECK PARALLEL TO WALL.
7. PROVIDE DECK CLOSURE ELEMENTS AS REQUIRED TO ALLOW FULL DEPTH CONCRETE OVER TOP OF WALL, TYPICAL.
8. ATTACH BOTTOM TRACK TO CONCRETE SLAB ON DECK, SUSPENDED SLABS, SLAB ON GRADE, AND/OR FOUNDATION WALLS WITH 0.157"x3/4" PAF AT 24"oc AT INTERIOR WALLS AND 12"oc AT EXTERIOR WALLS.
9. PROVIDE BB150 BRIDGING AT A MAXIMUM SPACING OF 48"oc TYPICAL
10. IN ADDITION TO BRIDGING, PROVIDE IN PLANE BRACING IN ALL LOAD BEARING WALLS: PROVIDE BOX SHAPE AT 10'-0" ON CENTER MAX. (e.g. WALLS SHORTER THAN 10'-0" REQUIRE (1) STIFFENER, WALLS 10'-0" TO 20'-0" LONG REQUIRE (2) STIFFENERS, AND SO ON.) USE (2) STUDS (SAME SIZE AS WALL STUDS) 90 DEGREES FROM TYPICAL STUDS, ONE EACH FACE OF WALL. PROVIDE A STUD EACH END OF PERPENDICULAR STUDS. ATTACH WITH (6) #10 SCREWS AT 16"oc. SEE SECTION A-A BELOW.
11. EDGE DISTANCE OF ALL SCREWS SHALL BE 3/8", MINIMUM.
12. ALL OPENINGS IN UTILITY/ELEVATOR SHAFT WALLS TO BE FRAMED USING 400/600JS-34 (33), 400/600JR-34 (33), AND 400/600ES-34 (33) AS REQ'D.

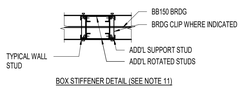

BOX STIFFENER DETAIL (SEE NOTE 11)

1 SE804.1 LIGHT GAUGE STEEL STUD WALL SCHEDULE
NO SCALE:
T-880-01

INTERIOR LIGHT GAUGE HEADER/JAMB SCHEDULE

SPAN LENGTH	HEADER SIZE	JAMB SIZE	JAMB CONNECTOR TOP	HEADER TYPE
0'-0" - 3'-6"	(2) 600S300-54 BOXED	(2) 600S200-43 BACK TO BACK	(2) SIMPSON SCB45.5	SSHDR-1
3'-6" - 8'-0"	(2) 800S300-54 BOXED	(2) 600S200-43 BOXED	(2) SIMPSON SCB45.5	SSHDR-2
8'-0"-9'-0"	(2) 800S300-54 BOXED	(4) 600S200-43 BACK TO BACK	(2) SIMPSON SCB45.5	SSHDR-3
9'-0"-10'-0"	(2) 1000S300-54 BOXED	(4) 600S200-43 BACK TO BACK	DIRECT BRG ON (2) BACK TO BACK STUDS	SSHDR-4

NOTE:

1. ALL HEADERS SHALL BE BUILT WITH (2) STUDS SIZE AS SHOWN IN THE SCHEDULE, AND (2) 400/600/800T150-54 TRACKS W/ A DEPTH TO MATCH WALL THICKNESS.
2. PLACE ONE STUD AT EACH FACE OF THE WALL, PLACE ONE TRACK ON TOP AND ONE TRACK ON BOTTOM. SCREW TOGETHER WITH (8) #10 SCREWS AT 16"oc.
3. THE WEBS OF EACH OF THE STUD MEMBERS SHALL EXTEND PAST THE EDGE OF THE OPENING TO THE FAR SIDE OF THE JAMB, EACH SIDE. COPE FLANGES AND TRACKS AS REQUIRED.
4. ALL JAMBS SHALL BE BUILT WITH (2) 400/600 STUDS AS SHOWN IN THE SCHEDULE. WHEN A BOX IS SPECIFIED MAKE THE FLANGES BUTT TOGETHER.
5. WELD JAMBS TOGETHER WITH A 1/8" BY 2" LONG WELD AT 12"oc. EACH SIDE.
6. JAMBS SHALL EXTEND FULL HEIGHT OF WALL.
7. ATTACH EACH WEB OF EACH HEADER STUD TO EACH FACE OF THE JAMBS WITH (8) #10 SCREWS AT EACH END OF THE HEADER.
8. EDGE DISTANCE OF ALL SCREWS SHALL BE 3/8" MINIMUM.
8. BACK TO BACK JAMBS TO BE SCREWED ALONG THEIR WEB WITH #8 SCREWS AT 12"oc.

SECTION A-A

2 SE804.1 LIGHT GAUGE HEADER/JAMB SCHEDULE
NO SCALE:
T-880-02

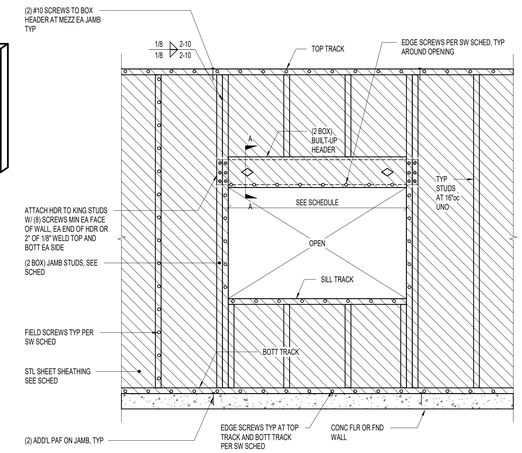

LIGHT GAUGE STEEL STUD SHEARWALL SCHEDULE (STEEL SHEATHED)

MARK	SHEATHING THICKNESS	SINGLE OR DOUBLE SHEATHED	EDGE SCREWS	FIELD SCREWS	BOTT TRACK TO SLAB	
SW-1	0.027"	DOUBLE	#8 AT 6"oc	#8 AT 12"oc	5/8"Ø THRU BOLT AT16"oc	
SW-2	0.027"	DOUBLE	#8 AT 2"oc	#8 AT 12"oc	5/8"Ø THRU BOLT AT16"oc	

NOTES:

1. ALL WALL SHEATHING SHALL BE FLAT STEEL PANEL SHEETS CONFORMING TO ASTM A1003 STRUCTURAL GRADE 33 TYPE H WITH THICKNESS AS SHOWN IN THE SCHEDULE. STANDARD WIDTH OF PANELS SHALL BE 4'-0". MINIMUM WIDTH OF ALL PANELS SHALL BE 12".
2. ALL STUDS SHALL BE AT LEAST 1-5/8" WIDE, 3-1/2" DEEP, AND 43 MILS THICK. ALL TRACKS SHALL BE A MINIMUM OF 1-1/2" WIDE, 3-1/2" DEEP AND 43 MILS THICK. ALL BLOCKING AND STRAPS SHALL BE A MINIMUM OF 1-1/2" WIDE AND 43 MILS THICK.
3. USE ASTM C1513 #10-16 METAL SCREWS. ALL SCREWS SHALL HAVE A MINIMUM OF THREE THREADS EXTENSION ON THE FAR SIDE OF THE CONNECTION. INSTALL SCREWS TIGHT TO THE SURFACE OF THE SHEATHING.
4. ALL PANEL EDGES ARE DESIGNED TO BE LAPPED. AT CONTRACTORS OPTION PANELS MAY BE BLOCKED AT JOINTS IN LIEU OF LAPS.
5. PROVIDE FIELD SCREWS AT 12" oc TYPICAL FOR ALL SHEATHED WALLS.
6. PLACE STEEL PANELS IN EITHER HORIZONTAL OR VERTICAL DIRECTION. BUTT ALL JOINTS AT COMMON STUD, STRAP, AND/OR BLOCKING. DO NOT LAP SHEETS.
7. AT WALLS WITH SHEATHING ON EACH FACE OF THE WALL, STAGGER ALL PANEL JOINTS ON ONE FACE OF THE WALL FROM THE PANEL JOINTS ON THE OTHER FACE OF THE WALL, BOTH HORIZONTAL AND VERTICAL.
8. ATTACH ALL BOTTOM PLATES OF WALLS ABOVE TO TOP PLATES OF WALLS BELOW WITH THRU-BOLTS, SIZE AND SPACING AS SHOWN IN THE SCHEDULE.
9. ALL TOP PLATES AT ROOF SHALL BE ATTACHED WITH (2) ROWS OF #10 SCREWS AT EDGE SPACING SHOWN IN THE SCHEDULE.
10. ALL BOTTOM PLATES AT CONCRETE SOLE PLATES SHALL BE ATTACHED TO CONCRETE WALLS AND/OR FOOTINGS WITH CAST IN PLACE ANCHOR BOLTS, SIZE AND SPACING AS SHOWN IN THE SCHEDULE.
11. PROVIDE A HOLD DOWN AT EACH END OF EACH SHEAR WALL. SEE THE TYPICAL SHEAR WALL AND HOLD DOWN DETAILS. PLACE DOUBLE BACK TO BACK STUDS OF HOLD DOWNS ADJACENT TO THE JAMB STUDS AT SIDES OF OPENINGS. ENDS OF SHEAR WALLS THAT ARE BOUNDED BY AN HSS COLUMN DO NOT REQUIRE A HOLD DOWN PROVIDED SHEATHING IS FASTENED TO THE HSS MEMBER WITH EDGE SCREWS AS INDICATED IN THE SCHEDULE.
12. PROVIDE BB150 BRIDGING AT A MAXIMUM SPACING OF 48"oc. TYPICAL. SEE LIGHT GAUGE STEEL STUD WALL SCHEDULE FOR CLIP INFO.
13. FOR BRIDGING SEE TYPICAL BEARING SCHEDULE.
14. FOR HOLD DOWNS, SEE PLAN AND HOLD DOWN SCHEDULE.
15. BACK TO BACK CHORDS TO BE INTERCONNECTED WITH A SPACING OF 12".
16. SOLE BOLTING AT THE TOP AND THE BOTTOM OF THE WALLS TO BE 5/8"Ø BOLTS WITH 6" EMBED AT 16"oc.

3 SE804.1 LIGHT GAUGE STEEL STUD SHEARWALL SCHEDULE (STEEL SHEATHED)
NO SCALE:
T-880-03

LIGHT GAUGE STEEL HOLD DOWN SCHEDULE

MARK	HOLD DOWN TYPE	COMP STUD TYPE	SCREWS	ANCHOR BOLT Ø	EMBED DEPTH	COMPRESSION STUD THICKNESS (MILS) (1)
HD-1	S/HDU6	D	(18) #10	7/8"	9"	68
HD-2	S/HDU9	H	(26) #10	7/8"	9"	68
HD-3	S/HDU11	A	(8) #14	1/2"	9"	97

JAMBS WITH HOLD DOWNS

HOLD DOWN NOTES:

1. ANCHOR BOLTS SHALL INCLUDE A DOUBLE NUT AND 4 x 4 x 1 1/2" PLATE WASHER.
2. INCREASE FOOTING DEPTH WHERE EMBEDMENT LENGTH PLUS 3" IS GREATER THAN FOOTING DEPTH SPECIFIED.
3. HOLD DOWN COMPRESSION POST SIZE TO MATCH WALL THICKNESS.
4. HOLD DOWN TYPES ARE SIMPSON STRONG TIE BRAND

SEE TYP COND FOR ADD'L INFO

WALL SHTG NOT SHOWN FOR CLARITY

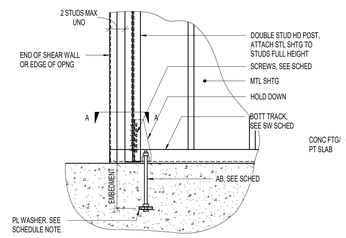

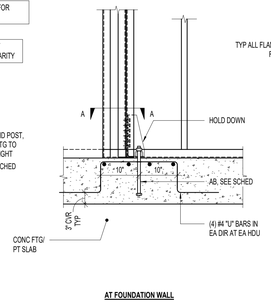

AT FOUNDATION WALL

PRE-INSTALL HD PRIOR TO WELDING BOXED JAMBS.

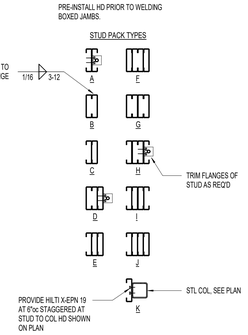

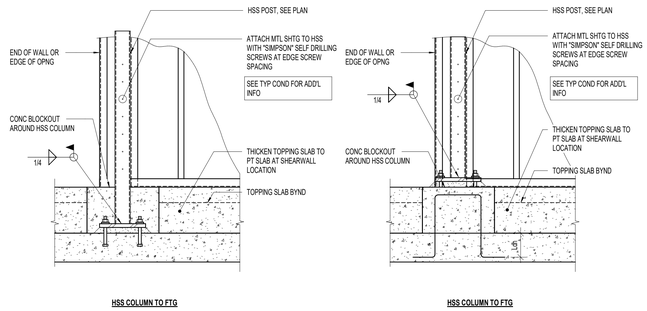

HSS COLUMN TO FTG

HSS COLUMN TO FTG

4 SE804.1 LIGHT GAUGE STEEL HOLDDOWN SCHEDULE
NO SCALE:
T-880-05

CRSA

PROJECT **240104**

BID PACKAGE #1 2024-08-26

REVISIONS

NO.	DATE	DESCRIPTION
1	10/28/2024	ADD-04

DTC WELDING TECH BUILDING & FABRICATION

355 SOUTH 650 EAST
KAYSVILLE, UT 84037

DAVISTECH
DAVIS TECHNICAL COLLEGE



2024-08-26
BID PACKAGE #1

NOTE:
THESE STRUCTURAL DRAWINGS ARE BASED ON ARCHITECTURAL DRAWINGS DATED July 23, 2024

DIMENSIONS AND ELEVATIONS, AS THEY RELATE TO THE BUILDING IN GENERAL, i.e. GRID TO GRID DIMENSIONS OR DECK BEARING ELEVATIONS, ARE SUPPLIED BY THE ARCHITECT. THEY ARE PROVIDED ON THE STRUCTURAL PLANS AND DETAILS FOR THE CONVENIENCE OF THE CONTRACTOR. VERIFY DIMENSIONS AND ELEVATIONS WITH ARCHITECTURAL DRAWINGS.

STEEL STUD SCHEDULES

SE804.1

(801) 355-5915

10/29/2024 8:33:44 AM

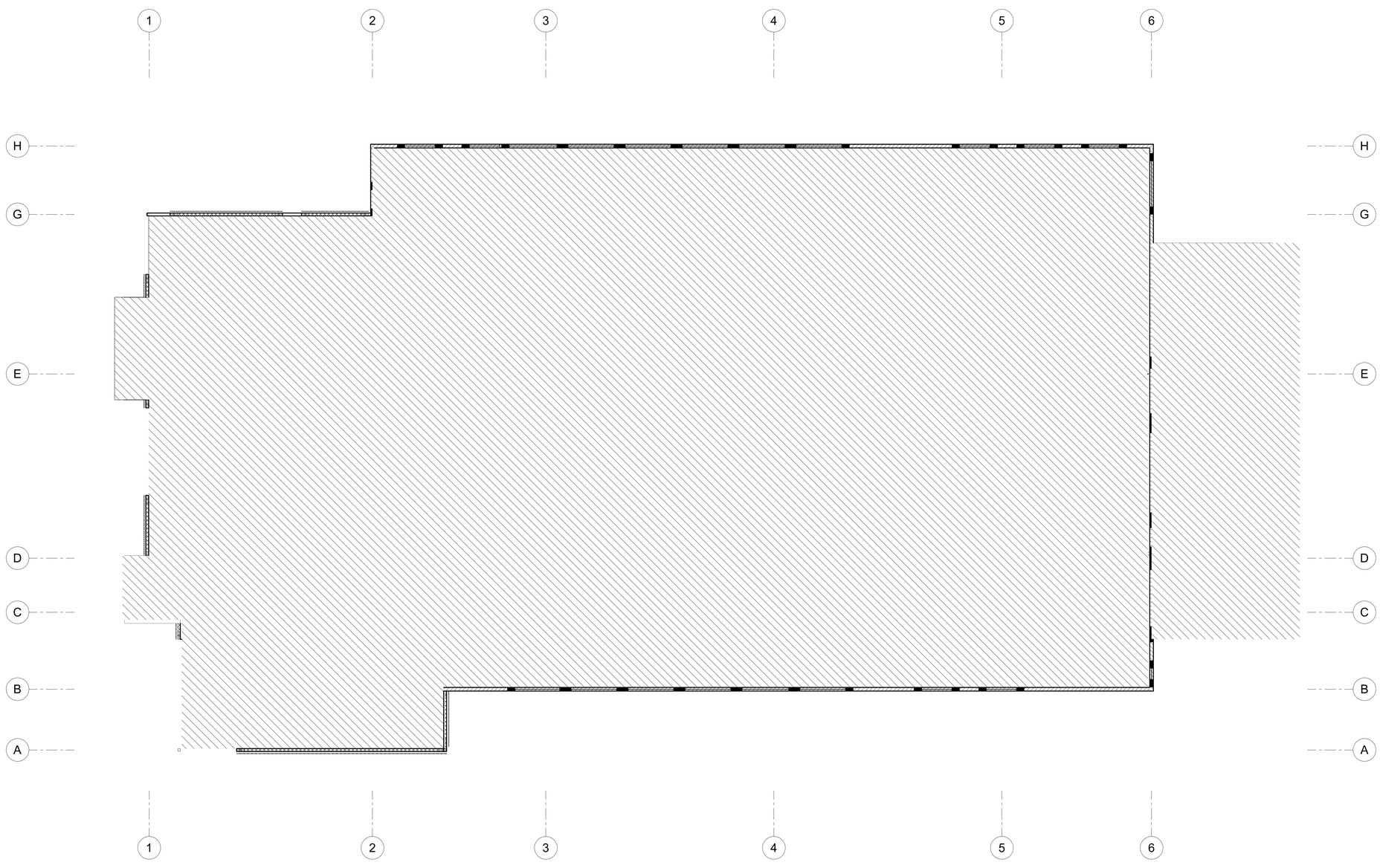

1 UPLIFT PLAN
SE805.1 NO SCALE:

STEEL DECK DIAPHRAGM GAUGE CONNECTION SCHEDULE

HATCH PATTERN	ALLOWABLE SHEAR	DECK GAGE	SUPPORT CONNECTION HILTI/PNEUTEK FASTENERS	SIDE SEAM ATTACHMENT /SSC2/DELTAGRIP SPACING	COMMENTS
	1438 plf	20 ga	7 PER 36"	8"oc	

*AT CONTRACTOR'S OPTION, WELDS MAY BE SUBSTITUTED FOR FASTENERS.

SUPPORT PATTERN TYPES

4 PER 36 — AT ALL PANEL SUPPORTS

7/4 PER 36 — AT INTERIOR PANEL SUPPORTS; AT END PANEL SUPPORTS

7 PER 36 — AT ALL PANEL SUPPORTS

9 PER 36 — AT ALL PANEL SUPPORTS

9/20/2024 11:23:45 AM

CRSA

PROJECT **240104**

BID PACKAGE #1 2024-08-26

REVISIONS

NO.	DATE	DESCRIPTION
1	10/16/2024	ADD-02

REVIEWED FOR CODE COMPLIANCE
Thomas W Peterson
10/28/2024
DIVISION OF FACILITIES CONSTRUCTION AND MANAGEMENT

DTC WELDING TECH & FABRICATION BUILDING

355 SOUTH 650 EAST
KAYSVILLE, UT 84037

DAVISTECH
DAVIS TECHNICAL COLLEGE

PROFESSIONAL STRUCTURAL ENGINEER
GREGORY S. DUNN
08/28/2024
9027257
STATE OF UTAH

2024-08-26
BID PACKAGE #1

NOTE:
THESE STRUCTURAL DRAWINGS ARE BASED ON ARCHITECTURAL DRAWINGS DATED July 23, 2024

DIMENSIONS AND ELEVATIONS, AS THEY RELATE TO THE BUILDING IN GENERAL, i.e. GRID TO GRID DIMENSIONS OR DECK BEARING ELEVATIONS, ARE SUPPLIED BY THE ARCHITECT. THEY ARE PROVIDED ON THE STRUCTURAL PLANS AND DETAILS FOR THE CONVENIENCE OF THE CONTRACTOR. VERIFY DIMENSIONS AND ELEVATIONS WITH ARCHITECTURAL DRAWINGS.

DIAPHRAGM SCHEDULE

SE805.1

(801) 355-5915

GAS FIRED DOMESTIC WATER HEATER

SYMBOL	SERVICE	TYPE	FUEL TYPE	RECOVERY RATE (90° RISE) (GPH)	INPUT CAPACITY (BTUH)	STORAGE (GALLONS)	WATER TEMP. °F		ELECTRICAL			MANUFACTURER / MODEL	EFF.	OVERALL SIZE	VENT CONNECTION SIZE	OPERATING WEIGHT (LBS.)	REMARKS
							EWT	LWT	VOLTS	HERTZ	PHASE						
DWH-1	DOMESTIC HOT WATER	POWER DIRECT VENT	NATURAL GAS	45	40,000	40	50	140	120	60	1	A.O. SMITH GPDL-40	96%	22"Ø x 58-1/4" H	3" PVC INTAKE 3" PVC EXHAUST	500	PROVIDE VENT TERMINATION KIT
SEE SPECIFICATION 221100																	

DOMESTIC WATER CIRCULATION PUMP

SYMBOL	GPM	FEET HEAD	HP	RPM	DUTY	TYPE	MOTOR ELECTRICAL CHARACTERISTICS			B&G SERIES	SIZE	REMARKS
							VOLTS	HERTZ	PHASE			
DCP-1	2	10	1/6	3450	DOMESTIC HOT WATER (140°) BUILDING RECIRC.	IN-LINE	115	60	1	PR	1-1/4" FLANGE	ALL BRONZE
SEE SPECIFICATION 221123												

DOMESTIC WATER SOFTENER (SIMPLEX)

SYMBOL	MAXIMUM CAPACITY GRAINS	CONT. FLOW GPM	PEAK FLOW GPM	ELECTRICAL			TANK DIMENSIONS		MANIFOLD SIZE	MANUFACTURER / MODEL #	REMARKS
				VOLTS	HERTZ	PHASE	SOFTENER	BRINE			
WS-1	600,000	51	69	120	60	1	14"Ø	24"Ø	2"	CALLIGAN CTM-60	
SEE SPECIFICATION 223100											

DOMESTIC EXPANSION TANK

SYMBOL	TANK VOLUME (GAL.)	ACCEPT VOLUME (GAL.)	AMTROL MODEL	ARRANGEMENT	DUTY	REMARKS
DET-1	2	0.9	ST-5	VERTICAL	DOMESTIC WATER SYSTEM	
SEE SPECIFICATION 221100						

AIR COMPRESSOR

SYMBOL	CAPACITY (AFCM)	TANK SIZE (GALLONS)	ELECTRICAL CHARACTERISTICS					QUINCY MODEL (QR-25 SERIES)	REMARKS
			VOLTS	HERTZ	PHASE	H.P.	RPM		
AC-1	84.5	200	460	60	3	25	940	FF5120HP	200 PSI SERVICE
SEE SPECIFICATION 221500									

REFRIGERATED AIR DRYER

SYMBOL	CAPACITY (SFCM)	CHARACTERISTICS				MANUFACTURER / MODEL NO.	REMARKS
		VOLTS	HERTZ	PHASE	DIAMETER W x D x H		
RAD-1	175	120	60	1		MK-U5-175	-
SEE SPECIFICATION 236213							

HOSE REELS

SYMBOL	PRESSURE (PSI)	SIZE	LENGTH (FT.)	MANUFACTURER / MODEL	SERVICE	REMARKS
HR-1	300	1/2"	50	REELCRAFT 7850 OLP	LOW PRESSURE COMPRESSED AIR (CA)	OR EQUAL BY COX REELS
HR-2	100	1/2"	50	REELCRAFT 7850 OLP	DOMESTIC WATER	OR EQUAL BY COX REELS
SEE SPECIFICATION						

THERMOSTATIC MIXING VALVE SCHEDULE

SYMBOL	MANUFACTURER / MODEL NO.	LOCATION	FLOW RATE (GPM)	ALLOWABLE PRESSURE DIFFERENTIAL (PSI)	OUTLET HOT WATER TEMP. (°F)	INLET SIZE	OUTLET SIZE	ACCESSORIES AND REMARKS
MV-1	WATTS LFUSG-B-M2	UNDER LAVATORIES	0.5	5	105°	1/2"	1/2"	ADJUSTABLE / ASSE 1070
MV-2	GUARDIAN - G3800LF	EMERGENCY SHOWER / EYEWASH	20	5	75°	1"	1"	ADJUSTABLE / ASSE 1070
SEE SPECIFICATION 221100								

WATER HAMMER ARRESTER SCHEDULE

MARK	MANUFACTURER / MODEL #	FIXTURE UNITS	INLET SIZE	REMARKS
WHA-A	PPP SC-500	1-11	1/2"	PER PDI STANDARD PDI-WH 201
WHA-B	PPP SC-750	12-32	3/4"	PER PDI STANDARD PDI-WH 201
WHA-C	PPP SC-1000	33-60	1"	PER PDI STANDARD PDI-WH 201
SEE SPECIFICATION 224200				

BACKFLOW PREVENTER SCHEDULE

SYMBOL	SERVICE	QTY.	SIZE	MANUFACTURER / MODEL #
BFP-1	BAPTISMAL FONT	1	1"	WATTS LF0095
BFP-2	LAUNDRY	2	1-1/4"	WATTS LF0095
BFP-3	WATER ENTRY	1	3"	WATTS LF909QT-FDA
BFP-4	CHILLED WATER, HEATING WATER MAKE-UP	1	2"	WATTS LF0095
BFP-5	WATER ENTRY	1	2"	WATTS LF0095
SEE SPECIFICATION 230523				

PLUMBING FIXTURE SCHEDULE

SYMBOL	DESCRIPTION	PIPE SIZE						COMMENTS
		TRAP	WASTE	VENT	C.W.	H.W.	AIR	
P-1	WATER CLOSET, FLUSH VALVE, FLOOR MOUNTED, ADA COMPLIANT	INT.	3"	2"	1"	-	-	-
P-2A	URINAL, WALL MOUNTED, STANDARD	INT.	2"	2"	3/4"	-	-	-
P-2B	URINAL, WALL MOUNTED, ADA COMPLIANT	INT.	2"	2"	3/4"	-	-	-
P-3	LAVATORY, WALL MOUNTED, ADA COMPLIANT	1-1/4"	1-1/2"	1-1/2"	1/2"	1/2"	-	-
P-4A	MOTHERS SINK, STAINLESS STEEL, SINGLE COMPARTMENT, MANUAL FAUCET	1-1/2"	2"	2"	1/2"	1/2"	-	-
P-4B	BREAK ROOM SINK, STAINLESS STEEL, SINGLE COMPARTMENT, MANUAL FAUCET	1-1/2"	2"	2"	1/2"	1/2"	-	-
P-4C	HAND SINK, STAINLESS STEEL, SINGLE COMPARTMENT, WALL MOUNTED	1-1/4"	1-1/2"	1-1/2"	1/2"	1/2"	-	-
P-4D	WASH SINK, SIX PERSON, FOOT ACTUATED	2"	2"	2"	1"	1"	-	-
P-5	SERVICE SINK, FLOOR MOUNTED	3"	3"	2"	1/2"	1/2"	-	-
P-6	ICE MAKER CONNECTION BOX	-	-	-	1/2"	-	-	-
P-7A	ELECTRIC WATER COOLER, BI-LEVEL WITH BOTTLE FILLER	1-1/2"	1-1/2"	1-1/2"	1/2"	-	-	-
P-7B	ELECTRIC WATER COOLER BOTTLE FILLER ONLY	1-1/2"	1-1/2"	1-1/2"	1/2"	-	-	-
P-8	EMERGENCY EYEWASH	-	-	-	1/2" (TEPID)	-	-	-
P-9	COMPRESSED AIR OUTLET	-	-	-	-	-	1/2"	-
HB	HOSE BIBB, INTERIOR, INTEGRALVACUUM BREAKER	-	-	-	1/2"	-	-	-
WH	WALL HYDRANT, NON-FREEZE, EXTERIOR	-	-	-	3/4"	-	-	-
WHA	WATER HAMMER ARRESTER	-	-	-	-	-	-	-
FS-1	FLOOR SINK	-	3"	-	-	-	-	-
FD-1	FLOOR DRAIN, 6" DIAMETER GRATE	2"	2"	2"	-	-	-	
FD-2	FLOOR DRAIN, 9" DIAMETER GRATE WITH SEDIMENT BUCKET		3"	2"	-	-	-	
SD	SHOWER DRAIN	2"	2"	2"	-	-	-	
RD	ROOF DRAIN	SEE DRAWINGS FOR SIZES			-	-	-	-
SRD	SECONDARY ROOF DRAIN	SEE DRAWINGS FOR SIZES			-	-	-	-
DSN	DOWNSPOUT NOZZLE	SEE DRAWINGS FOR SIZES			-	-	-	-
HD	HUB DRAIN	2"	2"	2"	-	-	-	-
CO	CLEANOUT	-	-	-	-	-	-	-
WCO	SHOWER TRIM	-	-	-	1/2"	1/2"	-	-
FCO	SHOWER TRIM	-	-	-	1/2"	1/2"	-	-
COTG	INSTRUCTION SINK	1-1/2"	1-1/2"	1-1/2"	-	1/2"	-	-
		-	-	-	-	-	3/4"	-
CB-1	CATCH BASIN 36"x36"x36"	3"	3"	2"	-	-	-	-
CB-2	CATCH BASIN 36"x36"x48"	4"	4"	2"	-	-	-	-
SEE SPECIFICATION 224200								

PLUMBING SYMBOL LEGEND

SYMBOL	DESCRIPTION
	NEW CONNECTION
	DROP IN PIPE
	RISE IN PIPE
	VALVE IN RISE
	UNION
	GAS SHUT OFF VALVE (GAS COCK)
	BALL VALVE
	CAP
WHA	GAS TYPE WATER HAMMER ARRESTOR
	THERMOMETER
PRV	PRESSURE REDUCING VALVE - (PRV)
FD	FLOOR DRAIN, FLOOR SINK OR ROOF DRAIN
FCO	FLOOR CLEAN OUT
WCO	WALL CLEAN OUT
CO	CLEAN OUT
VTR	VENT THROUGH ROOF
	COLD WATER
	DOMESTIC HOT WATER
	DOMESTIC HOT WATER RETURN
	SEWER OR WASTE
	VENT
—G—	GAS (NATURAL GAS)
—TW—	TEPID WATER
	SAFETY OR RELIEF VALVE
(E)	EXISTING
(FC #)	FIXTURE COUNT
—AR—	ARGAN GAS
—CO2—	CARBON DIOXIDE
—MG—	MIXED GASES
—CA—	COMPRESSED AIR

GENERAL PLUMBING NOTES

1. THE CONTRACTOR SHALL VERIFY ALL PLUMBING FIXTURES, EQUIPMENT REQUIREMENTS AND LOCATIONS, AND ALL RELATED UTILITIES WITH THE MECHANICAL AND ARCHITECTURAL PLANS AND SPECIFICATIONS AND SHALL PROVIDE ALL SERVICES AS REQUIRED.
2. ALL WALL-HUNG PLUMBING FIXTURES SHALL BE SECURELY ATTACHED TO AND SUPPORTED BY FLOOR-MOUNTED CARRIERS OF ALL-METAL CONSTRUCTION. FIXTURE HANGERS OR ARMS SHALL BE SUPPORTED FREE OF THE FINISHED WALL. HANGERS SHALL BE BY WADE, SMITH, JOSAM, OR ZURN.
3. EACH INDIVIDUAL FIXTURE SUPPLY SHALL BE PROVIDED WITH A CHROME-PLATED STOP VALVE WITH HAND WHEEL. VALVE SHALL BE BALL TYPE, QUARTER TURN AS APPROVED BY ENGINEER. STOPS SHALL BE ON BOTH HOT AND COLD WATER LINES.
4. FIXTURES AND ACCESSORIES SHALL BE AS SPECIFIED. EACH ITEM SHALL BE COMPLETE WITH CHROME-PLATED BRASS TRIM. SEE PLUMBING FIXTURE SCHEDULE.
5. CAULK WITH SILICONE COMPOUND AROUND ALL FIXTURES AT INTERFACE WITH WALLS AND/OR FLOOR.
6. ALL PLUMBING SHALL BE DONE IN ACCORDANCE WITH THE LATEST ADOPTED EDITION OF THE UTAH PLUMBING CODE AND/OR LOCAL ORDINANCES.

CRSA

PROJECT **24-038**

BID PACKAGE #1 2024-08-26

REVISIONS

NO.	DATE	DESCRIPTION
1	10.21.24	BP1 ADD 3

REVIEWED FOR CODE COMPLIANCE
Thomas W Peterson
10/28/2024
DIVISION OF FACILITIES CONSTRUCTION AND MANAGEMENT

DAVIS TECHNICAL COLLEGE WELDING TECHNOLOGY BUILLDING

355 SOUTH 650 EAST
KAYSVILLE, UT 84037

LICENSED PROFESSIONAL ENGINEER
No. 270896
ROBERT JACK KESLER
09/25/24
STATE OF UTAH

PLUMBING SCHEDULES AND SYMBOL LEGEND

P-001.1

(801) 355-5915

DRAWING NOTES

NOTE #	DESCRIPTION
1	SEE CIVIL SITE UTILITY PLAN FOR CONTINUATION.
2	RISE PUMPED CONDENSATE UP INTO CEILING SPACE AND CONNECT INTO THE TOP OF THE 3/4" GRAVITY CONDENSATE LINE. ROUTE AS SHOWN.
3	ROUTE 3/4" CONDENSATE HIGH IN CEILING SPACE AS SHOWN.
4	DROP 3/4" CONDENSATE DOWN ON WALL AND ROUTE TO FLOOR DRAIN. PROVIDE 1" AIR GAP AT DRAIN.
5	DROP 1" CONDENSATE DOWN THROUGH ROOF AND ROUTE AS SHOWN HIGH IN CEILING SPACE. SEE EVAPORATIVE COOLER CONNECTION DETAIL 9/PL502.
6	ROUTE 1" CONDENSATE HIGH IN CEILING SPACE AS SHOWN.
7	DROP 1" CONDENSATE DOWN ON WALL AND DRAIN INTO FLOOR SINK. TERMINATE 1" ABOVE FLOOR SINK RIM TO PROVIDE AIR GAP.
8	1/2" DRAIN FROM ROOF HYDRANT (RH). SEE PL112.2 FOR CONTINUATION.

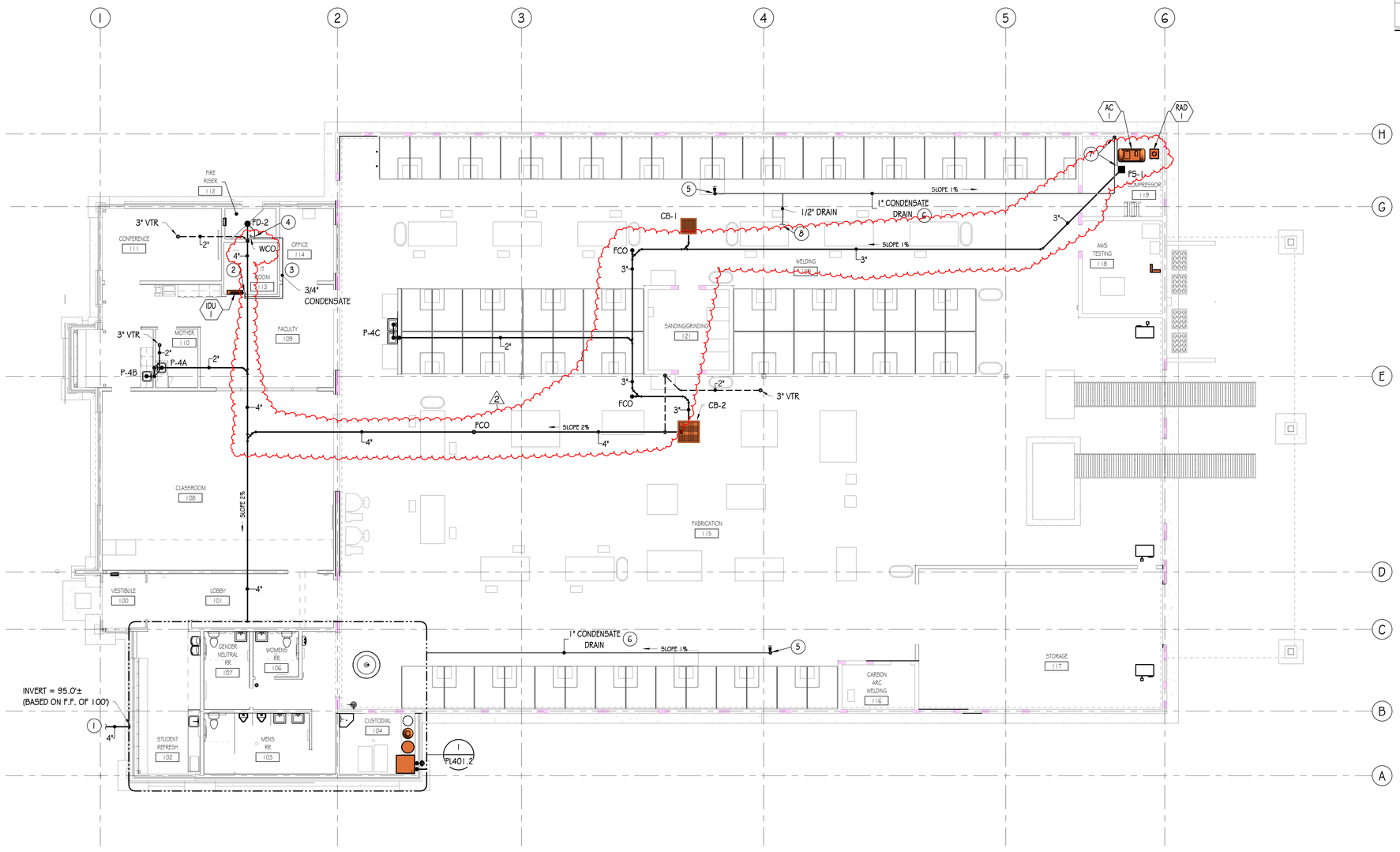

1 PL111.1 PLUMBING PLAN - DRAIN/WASTE/VENT
SCALE: 1/8" = 1'-0"

10 5 0 10 20

10/31/2024 4:05:39 AM

CRSA

PROJECT **24-038**

BID PACKAGE #1 2024-08-26

REVISIONS

NO.	DATE	DESCRIPTION
1	10.21.24	BP1 ADD 3
2	11.01.24	BP1 ADD 5

DAVIS TECHNICAL COLLEGE WELDING TECHNOLOGY BUILDING

355 SOUTH 650 EAST
KAYSVILLE, UT 84037

LICENSED PROFESSIONAL ENGINEER
No. 270896
ROBERT JACK KESLER
10/25/24
STATE OF UTAH

PLUMBING PLAN - DRAIN/WASTE/VENT

PL111.1

(801) 355-5915

DRAWING NOTES

NOTE #	DESCRIPTION

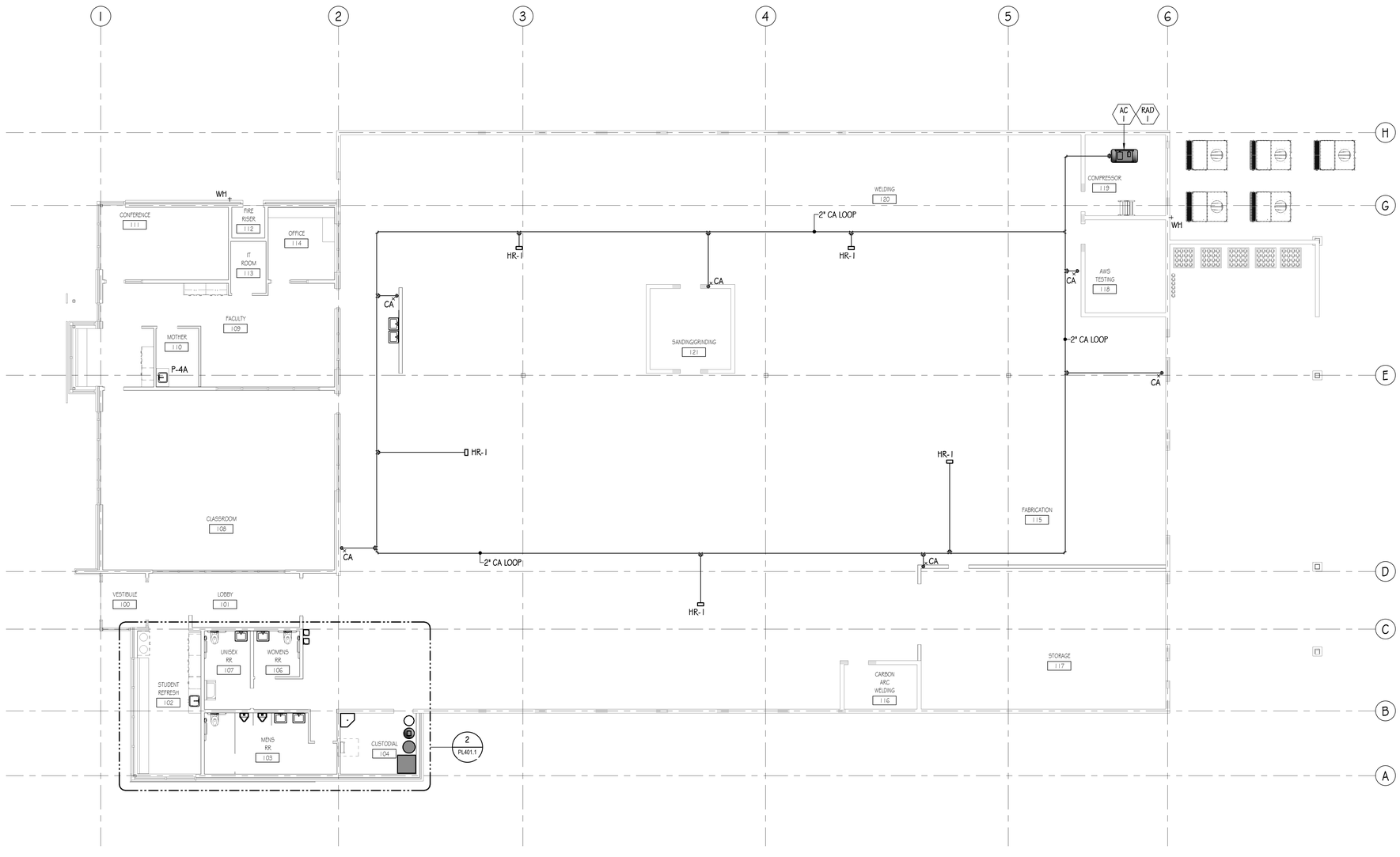

1 PL112 **PLUMBING PLAN - WATER, GAS & COMPRESSED AIR**

SCALE: 1/8" = 1'-0"

10 5 0 10 20

8/27/2024 12:20:18 PM

CRSA

PROJECT **24-038**

BID PACKAGE #1 2024-08-26

REVISIONS

NO.	DATE	DESCRIPTION

REVIEWED FOR CODE COMPLIANCE
Thomas W Peterson
10/28/2024
DIVISION OF FACILITIES CONSTRUCTION AND MANAGEMENT

DAVIS TECHNICAL COLLEGE WELDING TECHNOLOGY BUILLDING

355 SOUTH 650 EAST
KAYSVILLE, UT 84037

LICENSED PROFESSIONAL ENGINEER
No. 270896
ROBERT JACK KESLER
04/25/24
STATE OF UTAH

PLUMBING PLAN - WATER, GAS & COMPRESSED AIR

PL112.1

(801) 355-5915

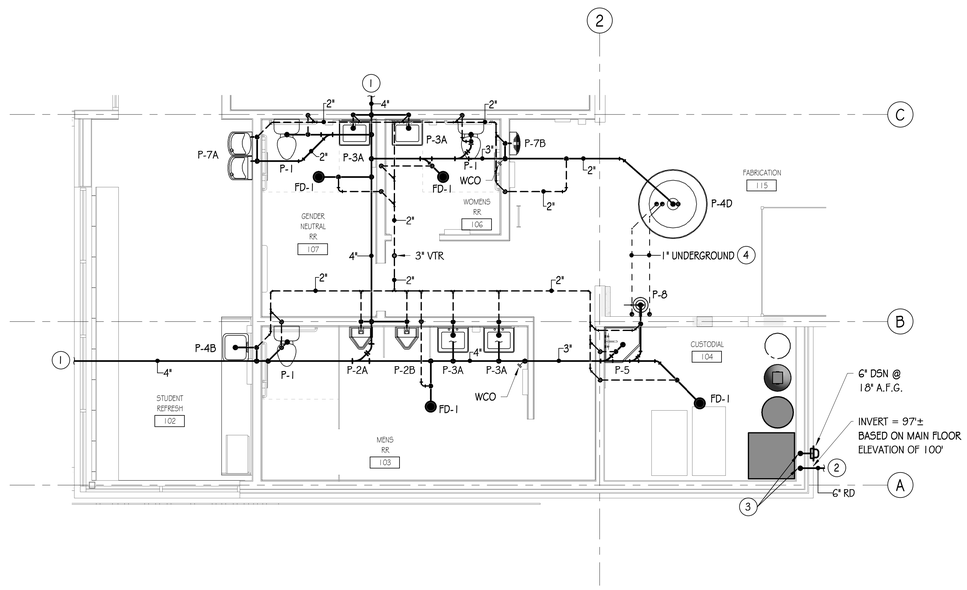

1 PL401.1 ENLARGED PLUMBING PLAN - WASTE & VENT

SCALE: 1/4" = 1'-0"

5 2.5 0 5 10

DRAWING NOTES

NOTE #	DESCRIPTION
1	SEE PL111.1 FOR CONTINUATION.
2	SEE CIVIL SITE UTILITY PLAN FOR CONTINUATION.
3	DROP 6" RD AND 6" SRD DOWN ON WALL. EXTEND 6" SRD THROUGH WALL AND DAYLIGHT WITH DOWNSPOUT NOZZLE APPROXIMATELY 18" A.F.G. CONTINUE DROPPING 6" RD DOWN TO BELOW GRADE BEFORE EXTENDING THROUGH EXTERIOR WALL.
4	ROUTE 1" DHW AND 1" DCW UNDERGROUND TO SERVE WASH SINK (P-4D). SEE UNDERFLOOR WATER PIPE DETAIL 4/PL502.

CRSA

PROJECT **24-038**

BID PACKAGE #1 2024-08-26

REVISIONS

NO.	DATE	DESCRIPTION
1	10.21.24	BP1 ADD 3

REVIEWED FOR CODE COMPLIANCE
Thomas W Peterson
10/28/2024
DIVISION OF FACILITIES CONSTRUCTION AND MANAGEMENT

DAVIS TECHNICAL COLLEGE WELDING TECHNOLOGY BUILLDING

355 SOUTH 650 EAST
KAYSVILLE, UT 84037

LICENSED PROFESSIONAL ENGINEER
No. 270896
ROBERT JACK KESLER
04/25/21
STATE OF UTAH

1 ENLARGED PLUMBING PLAN

PL401.1

(801) 355-5915

10/21/2024 11:29:47 AM

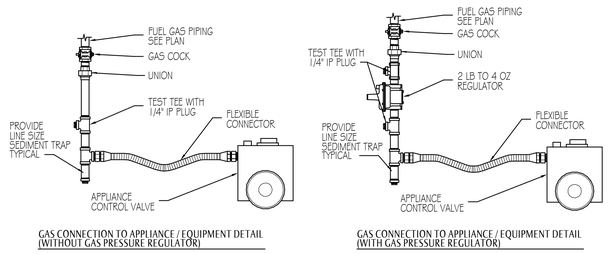

GAS CONNECTION TO APPLIANCE / EQUIPMENT DETAIL (WITHOUT GAS PRESSURE REGULATOR)

GAS CONNECTION TO APPLIANCE / EQUIPMENT DETAIL (WITH GAS PRESSURE REGULATOR)

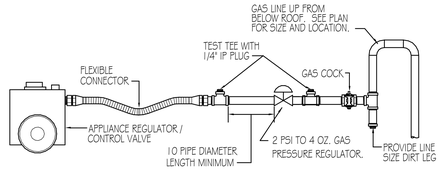

GAS CONNECTION TO RTU DETAIL

9 PL501 GAS CONNECTION DETAILS

SCALE: NONE

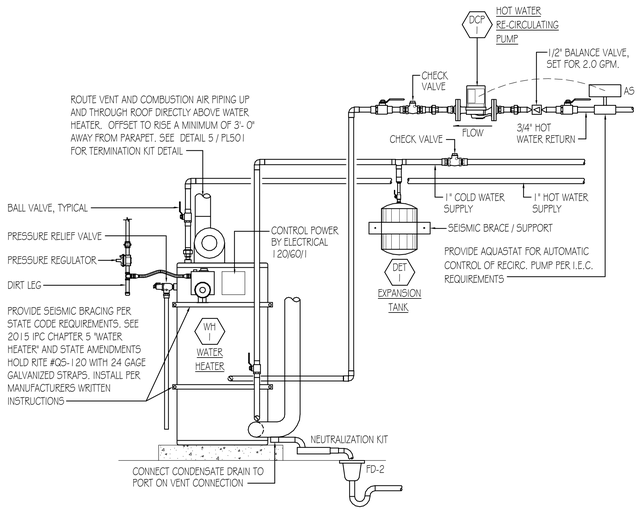

10 PL501 GAS FIRED WATER HEATER DETAIL

SCALE: NONE

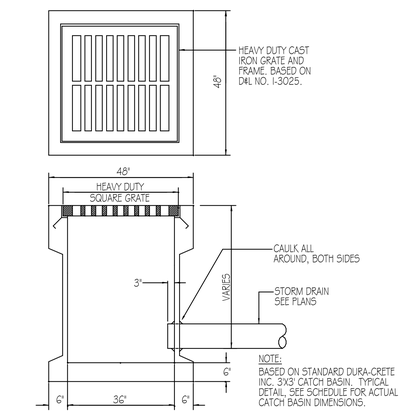

11 PL501 CATCH BASIN (CB-1) DETAIL

SCALE: NONE

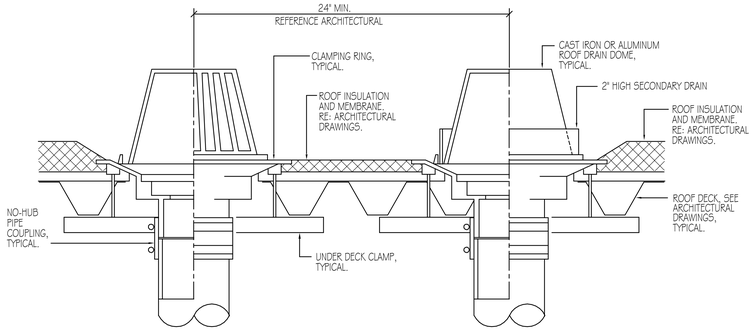

ROOF DRAIN

SECONDARY ROOF DRAIN

5 PL501 ROOF DRAIN DETAIL

SCALE: NONE

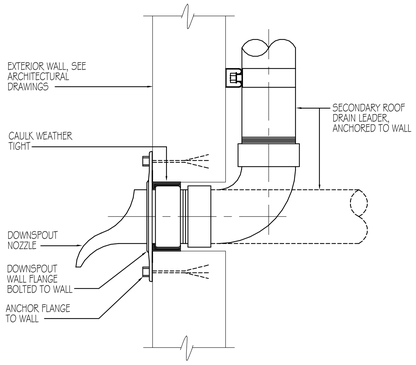

6 PL501 DOWNSPOUT NOZZLE AT WALL DETAIL

SCALE: NONE

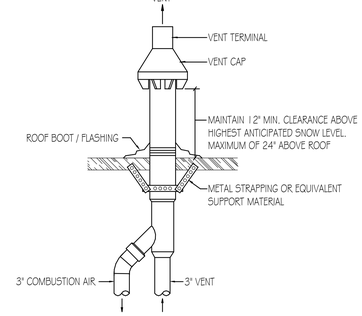

7 PL501 CONCENTRIC VENT KIT AT ROOF DETAIL

SCALE: NONE

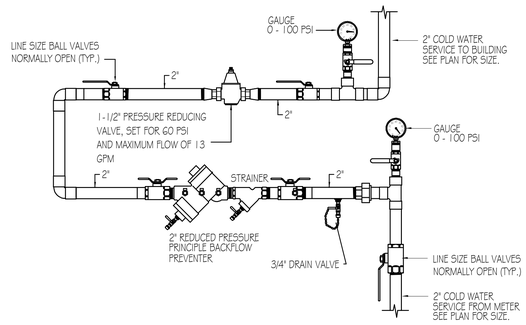

8 PL501 BUILDING WATER ENTRY DETAIL

SCALE: NONE

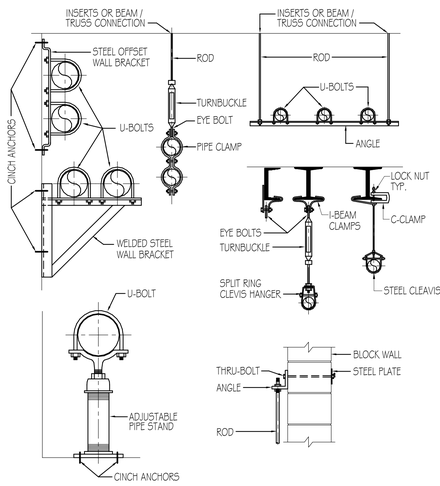

1 PL501 TYPICAL PIPE SUPPORTS DETAIL

SCALE: NONE

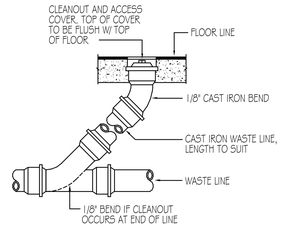

FLOOR CLEANOUT (FCO)

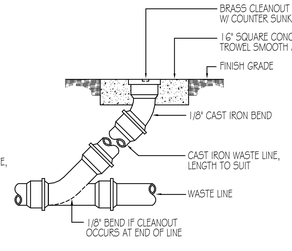

CLEANOUT TO GRADE (COTG)

2 PL501 CLEANOUT DETAILS

SCALE: NONE

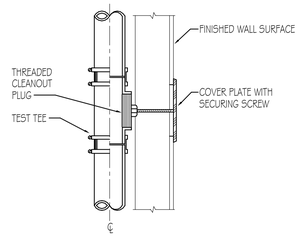

MOUNTING HEIGHT CHART	
LOCATION DESCRIPTION	CENTERLINE HEIGHT
URINAL	48"
LAVATORY	12"
SINK	12"
GENERAL WALL	12"
NOTE: COORDINATE WITH ARCHITECT PRIOR TO INSTALLING AT A HEIGHT OTHER THAN THAT LISTED ABOVE.	

3 PL501 WALL CLEANOUT DETAIL

SCALE: NONE

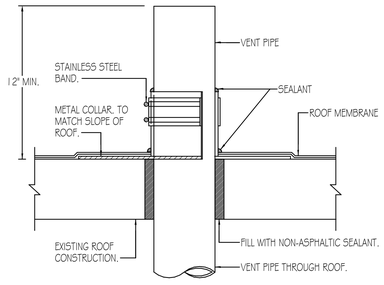

4 PL501 VENT THRU ROOF DETAIL

SCALE: NONE

CRSA

PROJECT **24-038**

BID PACKAGE #1 2024-08-26

REVISIONS

NO.	DATE	DESCRIPTION
1	10.21.24	BP1 ADD 3

REVIEWED FOR CODE COMPLIANCE
Thomas W Peterson
10/28/2024
DIVISION OF FACILITIES CONSTRUCTION AND MANAGEMENT

DAVIS TECHNICAL COLLEGE WELDING TECHNOLOGY BUILDING

355 SOUTH 650 EAST
KAYSVILLE, UT 84037

LICENSED PROFESSIONAL ENGINEER No. 270896 ROBERT JACK KESLER 04/17/24 STATE OF UTAH

1 PLUMBING DETAILS

PL501.1

(801) 355-5915

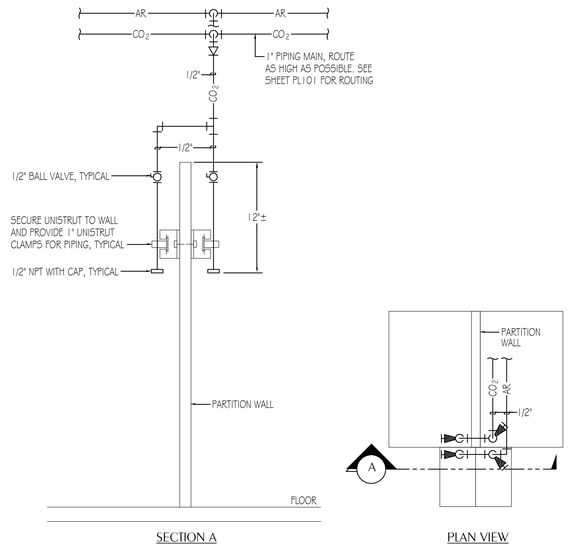

5 CO2 AND AR WELDING GAS DETAIL
PL502 — SCALE: NONE

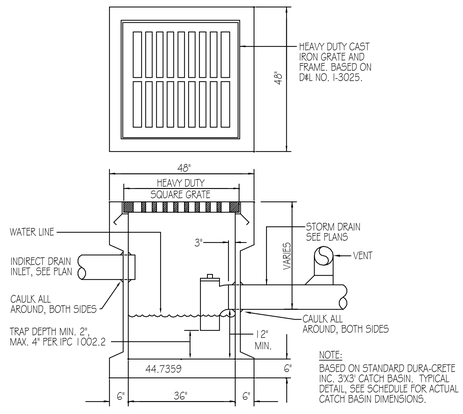

6 CATCH BASIN (CB-2) DETAIL
PL502 — SCALE: NONE

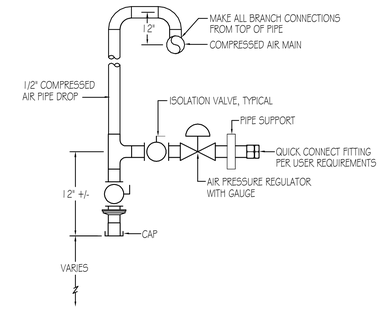

1 COMPRESSED AIR DROP WITH TEE DETAIL
PL502 — SCALE: NONE

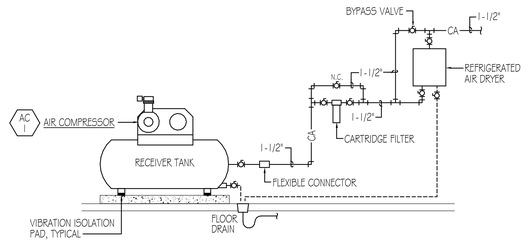

2 COMPRESSED AIR PIPING DETAIL
PL502 — SCALE: NONE

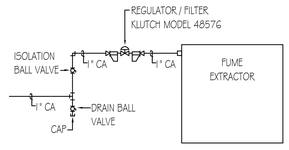

3 COMPRESSED AIR SUPPLY CONNECTION DETAIL
PL502 — SCALE: NONE

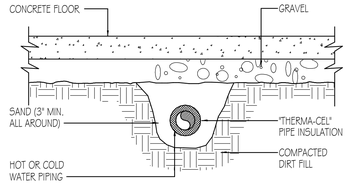

4 UNDERFLOOR WATER PIPE DETAIL
PL502 — SCALE: NONE

CRSA

PROJECT **24-038**

BID PACKAGE #1 2024-08-26

REVISIONS

NO.	DATE	DESCRIPTION
1	10.21.24	BP1 ADD 3

REVIEWED FOR CODE COMPLIANCE
Thomas W Peterson
10/28/2024
DIVISION OF FACILITIES CONSTRUCTION AND MANAGEMENT

DAVIS TECHNICAL COLLEGE WELDING TECHNOLOGY BUILLDING
355 SOUTH 650 EAST
KAYSVILLE, UT 84037

LICENSED PROFESSIONAL ENGINEER
No. 270896
ROBERT JACK KESLER
04/25/24
STATE OF UTAH

1 PLUMBING DETAILS

PL502.1

(801) 355-5915

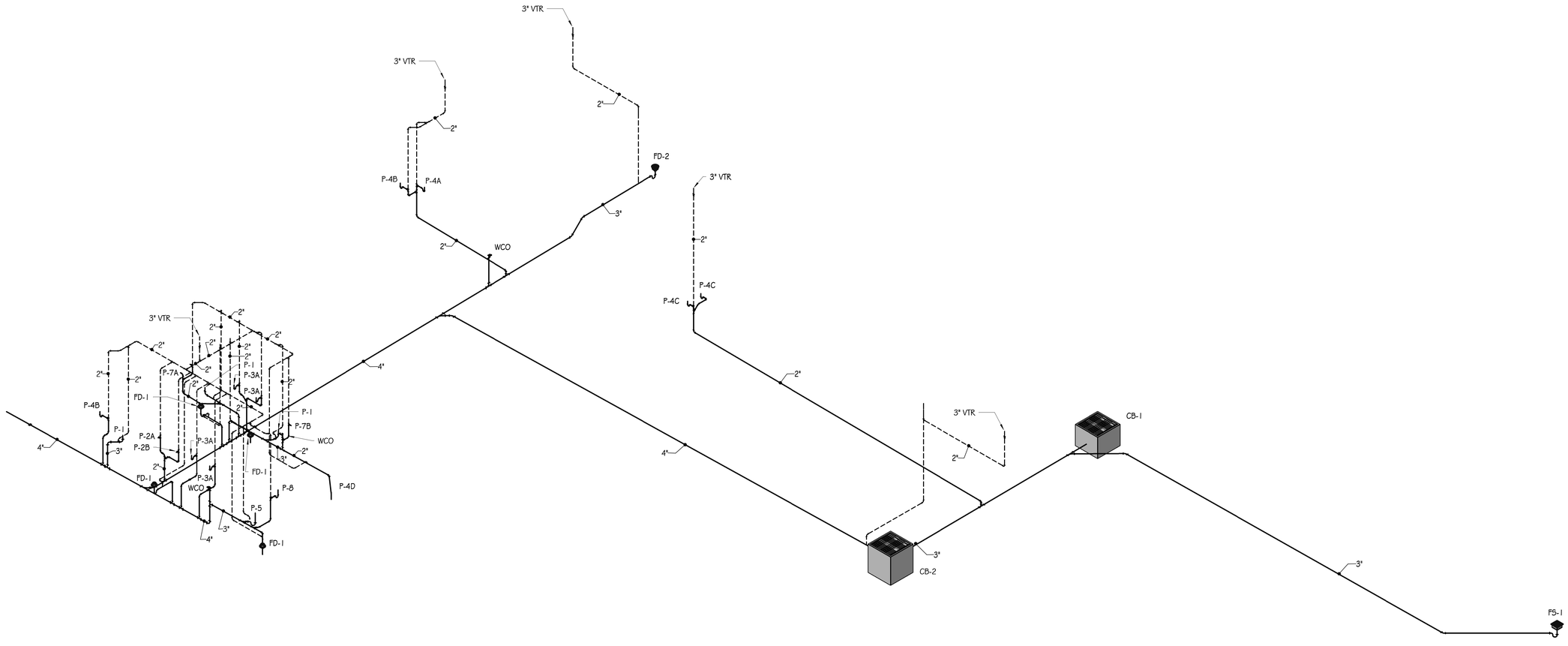

WASTE & VENT ISOMETRIC

1 / PL901.1 SCALE: NONE

CRSA

PROJECT **24-038**

BID PACKAGE #1 2024-08-26

REVISIONS

NO.	DATE	DESCRIPTION
1	10.21.24	BP1 ADD 3

REVIEWED FOR CODE COMPLIANCE
Thomas W Peterson
10/28/2024
DIVISION OF FACILITIES CONSTRUCTION AND MANAGEMENT

DAVIS TECHNICAL COLLEGE WELDING TECHNOLOGY BUILLDING

355 SOUTH 650 EAST
KAYSVILLE, UT 84037

LICENSED PROFESSIONAL ENGINEER
No. 270896
ROBERT JACK KESLER
STATE OF UTAH

WASTE & VENT ISOMETRIC

PL901.1

(801) 355-5915

10/21/2024 11:29:49 AM

SYSTEM RESPONSIBILITY MATRIX

	DESIGNED BY	FURNISHED BY	INSTALLED BY	NOTES
POWER				
MEDIUM VOLTAGE RACEWAYS	A/E	CONTRACTOR	CONTRACTOR	
MEDIUM VOLTAGE CABLING/EQUIPMENT	NIC	NIC	NIC	By Kaysville City Power
RACK MOUNTED UPS SYSTEM	OWNER	OWNER	OWNER	Eaton
EV CHARGERS	NIC	NIC	NIC	
TELECOMM				
RACEWAYS (CONDUIT AND CABLETRAY)	A/E	CONTRACTOR	CONTRACTOR	
BACKBONE FIBER	A/E	CONTRACTOR	CONTRACTOR	24ST SMF
FIBER TERMINATION SHELVES (FPP)	A/E	CONTRACTOR	CONTRACTOR	
RISER PATCH PANELS (RPP)	A/E	CONTRACTOR	CONTRACTOR	
HORIZONTAL CABLING	A/E	CONTRACTOR	CONTRACTOR	CAT 6A
RJ45 INSERTS AND FACEPLATES	A/E	CONTRACTOR	CONTRACTOR	
PATCH PANELS/INSERTS SPP	A/E	CONTRACTOR	CONTRACTOR	
FIBER AND CAT 6A PATCH CORDS	OWNER	OWNER	OWNER	
MDF RACKS & WIRE MANAGERS	A/E	CONTRACTOR	CONTRACTOR	2-2 POST RACKS PER ER/TR
MDF CABINET	NIC	NIC	NIC	NA
MDF LADDER TRAY	A/E	CONTRACTOR	CONTRACTOR	
ACTIVE NETWORK ELECTRONICS	OWNER	OWNER	OWNER	WIRELESS AP's, L2/L3 SWITCHES, ETC.
EMERGENCY DAS SYSTEM TESTING	A/E	CONTRACTOR	CONTRACTOR	Performance Spec
EMERGENCY CELLULAR DAS SYSTEM	NIC	NIC	NIC	
SECURITY AND MISC. SYSTEMS				
RACEWAYS	A/E	CONTRACTOR	CONTRACTOR	
CCTV SYSTEMS	A/E	CONTRACTOR	CONTRACTOR	MILESTONE & AXIS
ACCESS CONTROLS SYSTEMS	NIC	CONTRACTOR	CONTRACTOR	S2 SYSTEM
INTRUSION DETECTION SYSTEMS	NIC	NIC	NIC	
WIRELESS CLOCKS	NIC	NIC	NIC	
FIRE ALARM	A/E	CONTRACTOR	CONTRACTOR	SILENT KNIGHT
Audio Visual				
RACEWAYS	A/E	CONTRACTOR	CONTRACTOR	
AUDIO SYSTEM	A/E	CONTRACTOR	CONTRACTOR	
VIDEO SYSTEM	A/E	CONTRACTOR	CONTRACTOR	
FLAT SCREENS & MOUNTS	A/E	OWNER	CONTRACTOR	
PROJECTORS, MOUNTS & SCREENS	A/E	CONTRACTOR	CONTRACTOR	

SYMBOLS LEGEND

SYMBOL	DESCRIPTION
ELECTRICAL POWER AND DISTRIBUTION	
	FUSE WITH RATING (ONE-LINE DIAGRAM).
	DISCONNECT, FUSED (ONE-LINE DIAGRAM).
	DISCONNECT, NONFUSED (ONE-LINE DIAGRAM).
	DISCONNECT WITH FUSE AND MOTOR STARTER COMBINATION (ONE-LINE DIAGRAM).
	OVERLOAD RELAY (ONE-LINE DIAGRAM).
	STARTER (ONE-LINE DIAGRAM).
	CIRCUIT BREAKER, MOLDED CASE (ONE-LINE DIAGRAM).
	CIRCUIT BREAKER, MOLDED CASE WITH SHUNT TRIP (ONE-LINE DIAGRAM).
MCP	CIRCUIT BREAKER, MOTOR CIRCUIT PROTECTION (ONE-LINE DIAGRAM).
#AF #AT	CIRCUIT BREAKER, ADJUSTABLE TRIP. "225AF" REPRESENTS THE RATING AND "150AT" REPRESENTS THE TRIP SETTING. (ONE-LINE DIAGRAM).
	CIRCUIT BREAKER, SOLID STATE (ONE-LINE DIAGRAM).
GFP	CIRCUIT BREAKER, SOLID STATE WITH GROUND FAULT PROTECTION (ONE-LINE DIAGRAM).
	MOTOR.
	TRANSFORMER (ONE-LINE DIAGRAM).
"1DPHA"	DISTRIBUTION PANELBOARD, MOTOR CONTROL CENTER, PLUG-IN BUSWAY, MEDIUM VOLTAGE SWITCHBOARD (ONE-LINE DIAGRAM).
"1H"	PANELBOARD (ONE-LINE DIAGRAM).
225/3 "1H"	PANELBOARD WITH MAIN LUGS ONLY. BUS SIZE AND PHASE AS SHOWN (ONE-LINE DIAGRAM).
225/3 "1H"	PANELBOARD WITH MAIN CIRCUIT BREAKER. SIZE AND PHASE AS SHOWN (ONE-LINE DIAGRAM).
225/3 "1H" 60/3	PANELBOARD WITH MAIN AND SUB FEED CIRCUIT BREAKER (ONE-LINE DIAGRAM).
REFERENCE AND LINE SYMBOLS	
A5 E-501	DETAIL INDICATOR: A5 INDICATES DETAIL NUMBER, E-501 INDICATES DRAWING SHEET WHERE DETAIL IS SHOWN.
A5 E-201	ELEVATION OR SECTION INDICATOR, EXTERIOR: A5 INDICATES ELEVATION OR SECTION NUMBER, E-201 INDICATES DRAWING SHEET WHERE ELEVATION OR SECTION IS SHOWN.
A5 E-201	ELEVATION OR SECTION INDICATOR, INTERIOR: A5 INDICATES ELEVATION OR SECTION NUMBER, E-201 INDICATES DRAWING SHEET WHERE ELEVATION OR SECTION IS SHOWN.
ROOM NAME 100	ROOM IDENTIFIER WITH ROOM NAME AND NUMBER.
1	KEYNOTE INDICATOR.
1	REVISION INDICATOR.
CU-1	EQUIPMENT INDICATOR.
X-X XMDP	MECHANICAL EQUIPMENT INDICATOR. "X-X" INDICATES EQUIPMENT MARK SHOWN ON EQUIPMENT SCHEDULE. "XMDP" IDENTIFIES PANEL EQUIPMENT IS CIRCUITED TO. REFER TO EQUIPMENT SCHEDULE FOR ADDITIONAL INFORMATION.
	BREAK, STRAIGHT: TO BREAK PARTS OF DRAWING
	BREAK, ROUND
MATCH LINE SEE XX/X-XXX	MATCH LINE INDICATOR: CENTER, EXTRA WIDE LINE.
	NEW LINE: MEDIUM LINE.
	HIDDEN FEATURES LINE: HIDDEN, THIN LINE
	EXISTING TO REMAIN LINE: THIN LINE.
	DEMOLITION LINE: DASHED, MEDIUM LINE
	PROPERTY LINE: DASHED, WIDE LINE.
	CONTRACT LIMIT LINE: DASHDOT, WIDE LINE.
XXX EF-X	ELECTRICAL EQUIPMENT INDICATOR. "XXX" INDICATES TYPE OF EQUIPMENT OR EQUIPMENT ID. "EF-X" IDENTIFIES MECHANICAL EQUIPMENT BEING SERVED. REFER TO EQUIPMENT SCHEDULE FOR ADDITIONAL INFORMATION.
X-X 1LA-3	EQUIPMENT INDICATOR. "X-X" INDICATES EQUIPMENT MARK SHOWN ON EQUIPMENT SCHEDULE. "1LA-3" IDENTIFIES PANEL EQUIPMENT IS CIRCUITED TO. REFER TO EQUIPMENT SCHEDULE FOR ADDITIONAL INFORMATION.

SYMBOLS LEGEND

SYMBOL	DESCRIPTION
ELECTRICAL POWER AND DISTRIBUTION	
225/3 "1H" 225/3	PANELBOARD WITH MAIN LUGS ONLY AND SURGE PROTECTION WITH CIRCUIT BREAKER (ONE-LINE DIAGRAM).
225/3 "1H" 225/3 "1H"	PANELBOARD WITH SUB FEED LUGS (ONE-LINE DIAGRAM).
225/3 "1H" "1H"	PANELBOARD WITH CIRCUIT BREAKER AND SUB FEED LUGS (ONE-LINE DIAGRAM).
	CT CABINET PER UTILITY'S REQUIREMENTS (ONE-LINE DIAGRAM).
	TRANSFER SWITCH (ONE-LINE DIAGRAM).
DMM	DIGITAL MULTIMETER (ONE-LINE DIAGRAM).
	EARTH GROUND (ONE-LINE DIAGRAM).
	SERVICE ENTRANCE SURGE PROTECTION (ONE-LINE DIAGRAM).
ANN	GENERATOR, ANNUNCIATOR (ONE-LINE DIAGRAM).
PB	PUSH BUTTON, REMOTE EMERGENCY STOP.
G	GENERATOR, POWER (ONE-LINE DIAGRAM).
M	METER.
VFC VFD	VARIABLE FREQUENCY MOTOR CONTROLLER (ONE-LINE DIAGRAM).
	DISCONNECT SWITCH, FUSED.
	DISCONNECT SWITCH, UNFUSED.
	STARTER, COMBINATION WITH DISCONNECT SWITCH.
	STARTER OR MOTOR CONTROLLER.
	PUSHBUTTON.
	PUSHBUTTONS, MOTOR CONTROL.
	PANELBOARD CABINET, FLUSH MOUNTED.
	PANELBOARD CABINET, SURFACE MOUNTED, 1 SECTION.
	PANELBOARD CABINET, SURFACE MOUNTED, 2 SECTION.
DP#_	DISTRIBUTION PANEL OR SWITCHBOARD.
LP	LIGHTING RELAY, CONTACTOR PANEL, OR DIMMING ENCLOSURE.
$ST	SWITCH, TOGGLE MOTOR STARTER WITH OVERLOAD PROTECTION.
	TRANSFORMER (SEE ONE-LINE FOR SIZE)
	SWITCH, SINGLE BREAK (ONE-LINE DIAGRAM).
	SPECIALIZED TRANSFER SWITCH (ONE-LINE DIAGRAM).
	CIRCUIT BREAKER, DRAW OUT (ONE-LINE DIAGRAM).
GESM	GENERATOR ENGINE START MONITORING SYSTEM GENERATOR MODULE (ONE-LINE DIAGRAM).
ESM	GENERATOR ENGINE START MONITORING SYSTEM ATS MODULE (ONE-LINE DIAGRAM).
	ARC ENERGY REDUCTION
WIRING METHODS	
	WIRING.
	WIRING TURNED UP OR TOWARDS OBSERVER.
	WIRING TURNED DOWN OR AWAY FROM OBSERVER.
A-1	SINGLE BRANCH CIRCUIT HOME RUN TO PANELBOARD WITH DEDICATED NEUTRAL CONDUCTOR. LETTER AND NUMBER NOTATION IDENTIFY PANEL AND CIRCUIT NUMBER.
A-1,3,5	BRANCH CIRCUIT HOME RUN TO PANELBOARD: NUMBER OF ARROWS INDICATES NUMBER OF CIRCUITS. LETTER AND NUMBER NOTATIONS IDENTIFY PANEL AND CIRCUIT NUMBERS.
1 A-1,3,5	BRANCH CIRCUIT HOME RUN TO PANELBOARD: NUMBER OF ARROWS INDICATES NUMBER OF CIRCUITS. LETTER AND NUMBER NOTATIONS IDENTIFY PANEL AND CIRCUIT NUMBERS. NUMBER IN BOX REFERS TO THE CONDUCTOR AND CONDUIT SCHEDULE.
	LOW VOLTAGE WIRING: DIVIDE, MEDIUM LINE.
	CONDUIT STUB. DIMENSION RECORD DRAWINGS AND MARK.
1	CONDUCTOR & CONDUIT ("CC") SCHEDULE INDICATOR. REFER TO ONE-LINE DIAGRAM.
HC	ADA ACCESS PUSH PLATE
	JUNCTION BOX.
C	JUNCTION BOX, CEILING.
SC	JUNCTION BOX, SYSTEMS FURNITURE COMMUNICATION CONNECTION.
SP	JUNCTION BOX, SYSTEMS FURNITURE POWER CONNECTION.
PB	PULL BOX.
	MECHANICAL EQUIPMENT CONNECTION. REFER TO EQUIPMENT SCHEDULE FOR REQUIREMENTS.
EV	ELECTRIC VEHICLE CHARGING STATION.
	GROUND BUSBAR. REFER TO GROUNDING RISER DIAGRAM FOR ADDITIONAL INFORMATION.

ABBREVIATIONS

NOTE: ALL ABBREVIATIONS MAY NOT BE USED.

1P	SINGLE POLE
1PH	SINGLE-PHASE
1WAY	ONE-WAY
2/C	TWO-CONDUCTOR
2WAY	TWO-WAY
3/C	THREE-CONDUCTOR
3WAY	THREE-WAY
4OUT	QUADRUPLE RECEPTACLE OUTLET
4PDT	FOUR-POLE DOUBLE THROW
4PST	FOUR-POLE SINGLE THROW
4W	FOUR-WIRE
4WAY	FOUR-WAY
A	ABOVE COUNTER
AC	ARMORED CABLE
ACS	ACCESS CONTROL SYSTEM
ADA	AMERICANS WITH DISABILITIES ACT
ADJ	ADJACENT
AFF	ABOVE FINISHED FLOOR
AFG	ABOVE FINISHED GRADE
AIC	AMPERE INTERRUPTING CAPACITY
ALUM	ALUMINUM
AMP	AMPERE
ANN	ANNUNCIATOR
AP	ACCESS POINT (WIRELESS DATA)
AR	AS REQUIRED
ASC	AMPS SHORT CIRCUIT
ATS	AUTOMATIC TRANSFER SWITCH
AV	AUDIO VISUAL
AWG	AMERICAN WIRE GAGE
BB	BUCK-BOOST TRANSFORMER
XFMR	
BFF	BELOW FINISHED FLOOR
BFG	BELOW FINISHED GRADE
C	CEILING MOUNTED
CAT	CATEGORY
CATV	COMMUNITY ANTENNA TELEVISION
CB	CIRCUIT BREAKER
CCBA	CUSTOM COLOR AS SELECTED BY ARCHITECT
CCTV	CLOSED CIRCUIT TELEVISION
CF/CI	CONTRACTOR FURNISHED/ CONTRACTOR INSTALLED
CF/OI	CONTRACTOR FURNISHED/ OWNER INSTALLED
CFBA	CUSTOM FINISH AS SELECTED BY ARCHITECT
CI	CONTACT INDICATOR
CKT	CIRCUIT
CM	CONSTRUCTION MANAGER
CND	CONDUIT
CO	CONVENIENCE OUTLET
COR	CONTRACTING OFFICER'S REPRESENTATIVE
CP	CONTROL PANEL
CR	CARD READER
CT	CURRENT TRANSFORMER
CTV	CABLE TELEVISION
CU	COPPER
dBA	UNIT OF SOUND LEVEL
DPDT	DOUBLE POLE, DOUBLE THROW
DS	DISCONNECT SWITCH
E	ENHANCED
EA	EACH
EM	EMERGENCY
EMT	ELECTRICAL METALLIC TUBING
ENT	ELECTRIC NONMETALLIC TUBING
EPO	EMERGENCY POWER OFF
EQUIP	EQUIPMENT
ER	EQUIPMENT ROOM
EX	EXISTING
F	FURNITURE MOUNTED
FA	FIRE ALARM
FCP	FIRE ALARM CONTROL PANEL
FLA	FULL LOAD AMPS
FMC	FLEXIBLE METAL CONDUIT
FOB	FREIGHT ON BOARD
FPP	FIBER PATCH PANEL
FVNR	FULL VOLTAGE NON-REVERSING
FVR	FULL VOLTAGE REVERSING
GEN	GENERATOR
GFCI	GROUND FAULT INTERRUPTER
GFP	GROUND FAULT PROTECTION
GIG	GIGA HERTZ
GND	GROUND
HD	HEAVY DUTY
HID	HIGH INTENSITY DISCHARGE
HOA	HAND-OFF-AUTOMATIC
HP	HORSE POWER
HPF	HIGH POWER FACTOR
HPS	HIGH PRESSURE SODIUM
HV	HIGH VOLTAGE
HWM	HORIZONTAL WIRE MANAGEMENT
HZ	HERTZ
I/O	INPUT/ OUTPUT
IG	ISOLATED GROUND
IMC	INTERMEDIATE METAL CONDUIT
IN/IS	INSULATED/ ISOLATED
IR	INFRARED
J-BOX	JUNCTION BOX
KCP	KAYSVILLE CITY POWER
kV	KILOVOLT
kVA	KILOVOLT AMPERE
kVAR	KILOVOLT AMPERE REACTIVE
kW	KILOWATT
kWh	KILOWATT HOUR
LED	LIGHT EMITTING DIODE
LFMC	LIQUID TIGHT FLEXIBLE METAL CONDUIT
LFNC	LIQUID TIGHT FLEXIBLE NONMETALLIC CONDUIT
LPS	LOW PRESSURE SODIUM
LRA	LOCKED ROTOR AMPS
LTG	LIGHTING
LV	LOW VOLTAGE
MATV	MASTER ANTENNA TELEVISION SYSTEM
MAX	MAXIMUM
MC	METAL CLAD
MCA	MINIMUM CIRCUIT AMPS
MCB	MAIN CIRCUIT BREAKER
MCC	MOTOR CONTROL CENTER
MCP	MOTOR CIRCUIT PROTECTION
MDP	MAIN DISTRIBUTION PANEL
MG	MOTOR GENERATOR
MH	MANHOLE
MIN	MINIMUM
MLO	MAIN LUGS ONLY
MOCP	MAXIMUM OVERCURRENT PROTECTION
MTS	MANUAL TRANSFER SWITCH
NA	NOT APPLICABLE
NC	NORMALLY CLOSED
NEC	NATIONAL ELECTRICAL CODE
NEMA	NATIONAL ELECTRICAL MANUFACTURERS ASSOCIATION
NFC	NATIONAL FIRE CODE
NFPA	NATIONAL FIRE PROTECTION ASSOCIATION
NIC	NOT IN CONTRACT
NL	NIGHT LIGHT
NO	NORMALLY OPEN
NTS	NOT TO SCALE
OC	ON CENTER
OCP	OVER CURRENT PROTECTION
OE	OWNER ELECTRONICS
OF/CI	OWNER FURNISHED/ CONTRACTOR INSTALLED
OF/OI	OWNER FURNISHED/ OWNER INSTALLED
OFP	OBTAIN FROM PLANS
OH DR	OVERHEAD (COILING) DOOR
OL	OVERLOAD
PB	PUSHBUTTON
PF	POWER FACTOR
PH	PHASE
PNL	PANEL
PNM	PLENUM
PR	PAIR
PS	POWER SUPPLY
PT	POTENTIAL TRANSFORMER
PTZ	PAN/TILT/ZOOM
PV	PHOTO VOLTAIC
QTY	QUANTITY
R	REMOVE
RCP	REFLECTED CEILING PLAN
RMC	RIGID METAL CONDUIT
RNC	RIGID NONMETAL CONDUIT
RO	REMOTE DOOR OPEN
RPM	REVOLUTIONS PER MINUTE
RPP	RISER PATCH PANEL
RR	REMOVE AND RELOCATE
S/S	START/STOP
SCA	SHORT CIRCUIT AMPS
SCBA	STANDARD COLOR AS SELECTED BY ARCHITECT
SF	SQUARE FOOT (FEET)
SFBA	STANDARD FINISH AS SELECTED BY ARCHITECT
SPD	SURGE PROTECTIVE DEVICE
SPDT	SINGLE POLE, DOUBLE THROW
SPEC	SPECIFICATION
SPP	STATION PATCH PANEL
SPST	SINGLE POLE, SINGLE THROW
ST	SINGLE THROW
SWBD	SWITCHBOARD
SWGR	SWITCHGEAR
TL	TWIST LOCK
TP	TELEPHONE POLE
TP	TWISTED PAIR
TR	TELECOMMMUNICATIONS ROOM
TTB	TELEPHONE TERMINAL BOARD
TV	TELEVISION
TVSS	TRANSIENT VOLTAGE SURGE SUPPRESSER
TYP	TYPICAL
UF	UNDERFLOOR
UGND	UNDERGROUND
UPS	UNINTERRUPTIBLE POWER SUPPLY
V	VOLTS
VA	VOLT AMPERE
VFC/VFD	VARIABLE FREQUENCY MOTOR CONTROLLER
VIC	VIDEO INTERCOM SYSTEM
VSS	VIDEO SURVEILLANCE SYSTEM
VWM	VERTICAL WIRE MANAGEMENT
W/	WITH
W/O	WITHOUT
WP	WEATHERPROOF
WPP	WIRELESS PATCH PANEL
XFMR	TRANSFORMER

GENERAL ELECTRICAL NOTES

1. CLARIFICATION METHODS: AT THE TIME OF BIDDING, BIDDERS SHALL FAMILIARIZE THEMSELVES WITH THE DRAWINGS AND SPECIFICATIONS. ANY QUESTIONS, MISUNDERSTANDINGS, CONFLICTS, DELETIONS, DISCONTINUED PRODUCTS, CATALOG NUMBER DISCREPANCIES, DISCREPANCIES BETWEEN THE EQUIPMENT SUPPLIED AND THE INTENT OR FUNCTION OF THE EQUIPMENT, ETC, SHALL BE SUBMITTED TO THE ARCHITECT/ENGINEER IN WRITING FOR CLARIFICATION PRIOR TO ISSUANCE OF THE FINAL ADDENDUM AND BIDDING OF THE PROJECT. WHERE DISCREPANCIES OR MULTIPLE INTERPRETATIONS OCCUR, THE MOST STRINGENT (WHICH IS GENERALLY RECOGNIZED AS THE MOST COSTLY) THAT MEETS THE INTENT OF THE DOCUMENTS SHALL BE ENFORCED.
2. OWNER FURNISHED ITEMS: THE OWNER WILL FURNISH MATERIAL AND EQUIPMENT AS INDICATED IN THE CONTRACT DOCUMENTS TO BE INCORPORATED INTO THE WORK. THESE ITEMS ARE ASSIGNED TO THE INSTALLER AND COSTS FOR RECEIVING, HANDLING, STORAGE, IF REQUIRED, AND INSTALLATION ARE INCLUDED IN THE CONTRACT SUM.
   A. THE INSTALLER'S RESPONSIBILITIES ARE THE SAME AS IF THE INSTALLER FURNISHED THE MATERIALS OR EQUIPMENT.
   B. THE OWNER WILL ARRANGE AND PAY FOR DELIVERY OF OWNER FURNISHED ITEMS FREIGHT ON BOARD JOB SITE AND THE INSTALLER WILL INSPECT DELIVERIES FOR DAMAGE. IF OWNER FURNISHED ITEMS ARE DAMAGED, DEFECTIVE OR MISSING, DOCUMENT DAMAGED ITEMS WITH THE TRANSPORT COMPANY AND THE OWNER WILL ARRANGE FOR REPLACEMENT. THE OWNER WILL ALSO ARRANGE FOR MANUFACTURER'S FIELD SERVICES, AND THE DELIVERY OF MANUFACTURER'S WARRANTIES AND BONDS TO THE INSTALLER.
   C. THE INSTALLER IS RESPONSIBLE FOR DESIGNATING THE DELIVERY DATES OF OWNER FURNISHED ITEMS AND FOR RECEIVING, UNLOADING AND HANDLING OWNER FURNISHED ITEMS AT THE SITE.THE INSTALLER IS RESPONSIBLE FOR PROTECTING OWNER FURNISHED ITEMS FROM DAMAGE, INCLUDING DAMAGE FROM EXPOSURE TO THE ELEMENTS, AND TO REPAIR OR REPLACE ITEMS DAMAGED AS A RESULT OF HIS OPERATIONS.
3. EXPOSED STRUCTURE AREAS (EXCLUDING MECHANICAL, ELECTRICAL, AND COMMUNICATION SPACES): INSTALL RACEWAYS BETWEEN DECK AND STRUCTURE WHEREVER POSSIBLE IN EXPOSED STRUCTURE CEILING AREAS. ROUTE RACEWAYS IN CONCEALED AREAS WHEREVER POSSIBLE. REFER ALL CONDITIONS WHERE RACEWAYS MUST BE INSTALLED WHICH CANNOT COMPLY WITH THESE REQUIREMENTS TO THE ARCHITECT.
4. SUBMITTALS: PROVIDE ORIGINAL ELECTRONIC PDF FORMAT, BOUND, BOOKMARKED (EACH SECTION AND PRODUCT), AND HIGHLIGHTED. JOB NAME AND SUBCONTRACTOR SHALL BE ON THE FRONT COVER. PREPARE INDEX OF EQUIPMENT SUBMITTED IN EACH TAB.
5. REFLECTED CEILING PLANS: COORDINATE THE LOCATION OF LIGHT FIXTURES WITH THE ARCHITECTURAL REFLECTED CEILING PLANS. REFER ALL DISCREPANCIES TO THE ARCHITECT AND ENGINEER.
6. ALL WORK SHALL BE DONE ACCORDING TO THE CURRENT NATIONAL ELECTRIC CODE (NEC), IBC, NFPA, AND IFC. COMPLIANCE AND FINAL APPROVAL IS SUBJECT TO THE ON SITE FIELD INSPECTION OF THE AHJ.

SITE COORDINATION

THE LOCATION, CAPACITY, AND VOLTAGE OF THE LINES ARE ALL IN ACCORDANCE WITH DATA GIVEN THIS OFFICE BY THE UTILITY COMPANY. COORDINATE WITH THE LOCAL UTILITY COMPANY FOR THE INSTALLATION OF THE ELECTRICAL SERVICE. COMPLY WITH UTILITY REGULATIONS. REPORT DISCREPANCIES TO THE ENGINEER.

ELECTRIC UTILITY

KAYSVILLE CITY POWER

PERSON CONTACTED: BRIAN JOHNSON
DATE: 8/22/2024
PHONE NUMBER: 801-544-8925
EMAIL: BJOHNSON@KAYSVILLE.GOV

ELECTRICAL SHEET INDEX

EE001.1	SHEET INDEX, AND ABBREVIATIONS
ES101.1	ELECTRICAL SITE PLAN
ES501.1	ELECTRICAL DETAILS
EP601.1	ONE-LINE DIAGRAM

BID PACKAGE 1 DESCRIPTION

THE SCOPE OF THIS BID PACKAGE INCLUDES:
1. EARLY PROCUREMENT OF THE SWITCHBOARD
2. CONDUIT SLEEVES ALONG BUILDING PERIMETER
3. ROUTING OF KAYSVILLE CITY POWER CONDUITS, AND SECONDARY FEEDERS TO THE SWITCHBOARD.
4. ROUTING OF TELECOMMUNICATION RACEWAYS FROM HAND HOLES TO BUILDING.

ALL OTHER ITEMS SHOWN ON THE SET WILL BE INCLUDED IN THE FOLLOWING BID SET AND SHALL NOT BE FURNISHED OR INSTALLED.

DEFINITIONS

NOTE: ALL DEFINITIONS MAY NOT BE USED.

INDICATED: THE TERM "INDICATED" REFERS TO GRAPHIC REPRESENTATIONS, NOTES, OR SCHEDULES ON THE DRAWINGS, OTHER PARAGRAPHS OR SCHEDULES IN THE SPECIFICATIONS, AND SIMILAR REQUIREMENTS IN THE CONTRACT DOCUMENTS. WHERE TERMS SUCH AS "SHOWN", "NOTED", "SCHEDULED", AND "SPECIFIED" ARE USED, IT IS TO HELP THE READER LOCATE THE REFERENCE, NO LIMITATION ON LOCATION IS INTENDED.

DIRECTED: TERMS SUCH AS "DIRECTED", "REQUESTED", AUTHORIZED", "SELECTED", "APPROVED", "REQUIRED", AND "PERMITTED" MEAN "DIRECTED BY THE ENGINEER", "REQUESTED BY THE ENGINEER", AND SIMILAR PHRASES.

APPROVED: THE TERM "APPROVED", WHERE USED IN CONJUNCTION WITH THE ENGINEER'S ACTION ON THE CONTRACTOR'S SUBMITTALS, APPLICATIONS, AND REQUESTS, IS LIMITED TO THE ENGINEER'S DUTIES AND RESPONSIBILITIES AS STATED IN GENERAL AND SUPPLEMENTARY CONDITIONS.

FURNISH: THE TERM "FURNISH" IS USED TO MEAN "SUPPLY AND DELIVER TO THE PROJECT SITE, READY FOR UNLOADING, UNPACKING, ASSEMBLY, INSTALLATION, AND SIMILAR OPERATIONS."

INSTALL: THE TERM "INSTALL" IS USED TO DESCRIBE OPERATIONS AT PROJECT SITE INCLUDING THE ACTUAL "UNLOADING, UNPACKING, ASSEMBLY, ERECTION, PLACING, ANCHORING, APPLYING, WORKING TO DIMENSION, FINISHING, CURING, PROTECTING, CLEANING, AND SIMILAR OPERATIONS."

PROVIDE: THE TERM "PROVIDE" MEANS "TO FURNISH AND INSTALL, COMPLETE AND READY FOR THE INTENDED USE."

INSTALLER: AN "INSTALLER" IS THE CONTRACTOR OR AN ENTITY ENGAGED BY THE CONTRACTOR, EITHER AS AN EMPLOYEE, SUBCONTRACTOR, OR SUB-SUBCONTRACTOR, FOR PERFORMANCE OF A PARTICULAR CONSTRUCTION ACTIVITY, INCLUDING INSTALLATION, ERECTION, APPLICATION, AND SIMILAR OPERATIONS. INSTALLERS ARE REQUIRED TO BE EXPERIENCED IN THE OPERATIONS THEY ARE ENGAGED TO PERFORM.

TECHNOLOGY SYSTEMS: THE TERM "TECHNOLOGY SYSTEMS" IS USED TO DESCRIBE ALL LOW VOLTAGE SYSTEMS GENERALLY REFERRED TO AS "SPECIAL SYSTEMS". THESE SYSTEMS INCLUDE BUT ARE NOT NECESSARILY LIMITED TO ALL SYSTEMS WHICH UTILIZE VOLTAGES OF LESS THAN 71 VOLTS SUCH AS SOUND SYSTEMS, VIDEO SYSTEMS, TV SYSTEMS, SECURITY SYSTEMS, VOICE AND DATA CABLING SYSTEMS, ETC...

CRSA

PROJECT 24-038

BID PACKAGE #1 2024-08-26

REVISIONS

NO.	DATE	DESCRIPTION

SPECTRUM ENGINEERS
324 S. State St., Suite 400
Salt Lake City, UT 84111
801-328-5151
www.spectrum-engineers.com
SE Project # 240296

REVIEWED FOR CODE COMPLIANCE
Thomas W Peterson
10/28/2024
DIVISION OF FACILITIES CONSTRUCTION AND MANAGEMENT

DTC WELDING TECH & FABRICATION BUILLDING

355 SOUTH 650 EAST
KAYSVILLE, UT 84037

LICENSED PROFESSIONAL ENGINEER
No. 12735266
Mario Sebastian Martinez
STATE OF UTAH
08/26/2024

SHEET INDEX, AND ABBREVIATIONS

EE001.1

(801) 355-5915

8/30/2024 4:42:33 PM

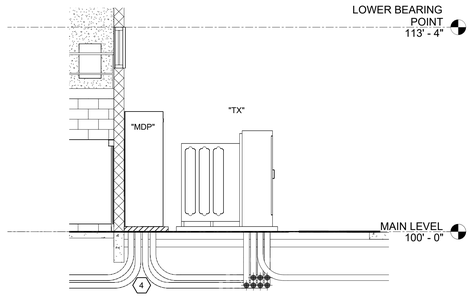

D1 CONDUIT MDP SECTION

SCALE: 1/4" = 1'-0"

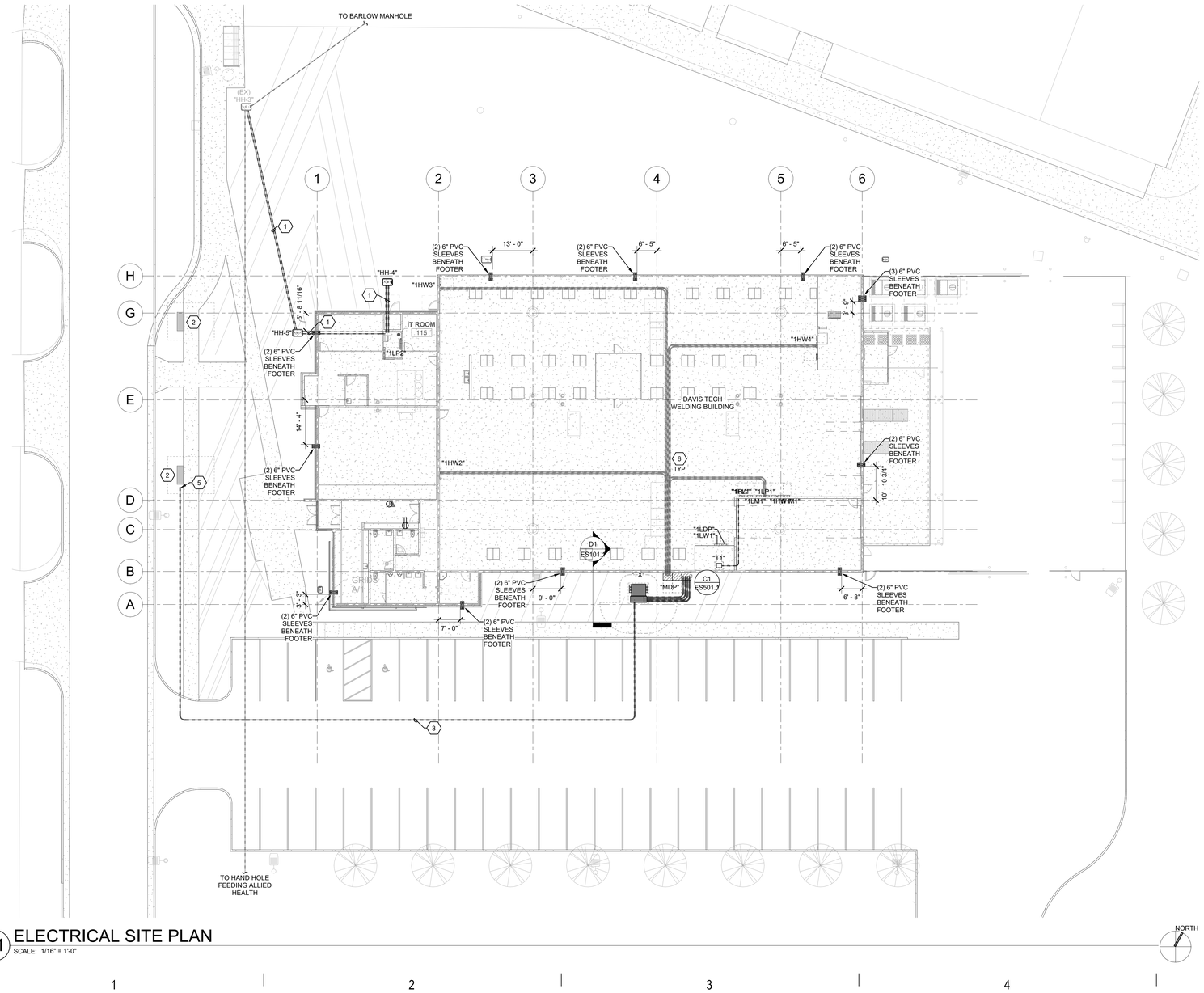

A1 ELECTRICAL SITE PLAN

SCALE: 1/16" = 1'-0"

8/30/2024 4:02:39 PM

GENERAL SHEET NOTES

1 THE ELECTRICAL CONTRACTOR SHALL MEET WITH AND COORDINATE WITH ALL SERVICE PROVIDERS (POWER, COMMUNICATION, CABLE/SATELLITE, ETC.) TO THE FACILITY ON SITE PRIOR TO ANY WORK BEING PREFORMED. CONFIRM WITH EACH SERVICE PROVIDER EXACT LOCATIONS OF EQUIPMENT AND ROUTING. COMPLY WITH ALL SERVICE PROVIDER'S CURRENT STANDARDS AND REQUIREMENTS. PROVIDE THE REQUIRED EQUIPMENT, RACEWAYS, BOXES, CABLE, ETC. AS REQUIRED BY THE SERVICE PROVIDER WHETHER SHOWN ON THE DRAWINGS OR NOT.

2 CONTRACTOR IS RESPONSIBLE FOR ALL TRENCHING, BACKFILL, AND COMPACTION ASSOCIATED TO ALL ELECTRICAL UNDERGROUND RACEWAYS AND CABLES. COORDINATE WITH ARCHITECTURAL AND CIVIL DRAWINGS. SEE UNDERGROUND RACEWAY DETAILS FOR REQUIREMENTS FOR EACH TRENCH.

3 THE ELECTRICAL CONTRACTOR SHALL HAVE ANY AND ALL CONCRETE POLE BASES AND SLABS REVIEWED BY A STRUCTURAL ENGINEER AND SHALL MODIFY DESIGN PER STRUCTURAL ENGINEER'S AND OR AHJ'S RECOMMENDATIONS.

4 THE ELECTRICAL CONTRACTOR IS RESPONSIBLE FOR ALL CONCRETE/ASPHALT CUTTING AND REPLACEMENT OF CONCRETE/ASPHALT TO MATCH EXISTING ASSOCIATED WITH UNDERGROUND RACEWAYS PROVIDED AS PART OF THIS PROJECT.

5 REFER TO PLANS FOR CONSTRAINTS ON PHYSICAL DIMENSIONS AND CLEARANCE REQUIREMENTS OF EQUIPMENT. PROVIDE EQUIPMENT DIMENSIONS THAT FALL WITHIN THE CONSTRAINTS OF EACH SPECIFIC LOCATION.

6 SERVICE EQUIPMENT SHALL BE LEGIBLY MARKED IN THE FIELD WITH THE MAXIMUM AVAILABLE FAULT CURRENT. VERIFY OR RE-CALCULATE THE AVAILABLE FAULT CURRENT AT THE SERVICE WHERE MODIFICATIONS TO THE ELECTRICAL INSTALLATION OCCUR. PLEASE INCLUDE NOTES IN THE ELECTRICAL DRAWINGS OR SUPPLY CALCULATIONS WHERE APPLICABLE. SEE NEC 110.24. (B)

7 ALL UNDERGROUND RACEWAYS SHALL UTILIZE GRADUAL SWEEPS WHERE POSSIBLE. PROVIDE FACTORY LONG SWEEP BENDS ONLY WHERE ABSOLUTELY NECESSARY OR NOTED.

8 CONTRACTOR SHALL ADJUST DEPTH OF RACEWAYS DEEPER AS NECESSARY TO AVOID CONFLICTS WITH OTHER UTILITIES AND MAINTAIN A SEPARATION OF NO LESS THAN 1 FOOT FROM ALL OTHER UTILITIES CROSSINGS UNLESS NOTED OTHERWISE.

9 ALL ELECTRICAL GEAR AND EQUIPMENT (GENERATOR, TRANSFORMER, SWITCHBOARDS, PANELBOARDS, DISCONNECTS, ENCLOSURES, ETC.) LOCATED OUTDOOR OR EXPOSED TO WEATHER SHALL BE NEMA 3R RATED UNLESS NOTED OTHERWISE.

SHEET KEYNOTES

1 PROVIDE 2 EA 4" CONDUITS WITH (1) 7 WAY 12.7X10 MM MICRODUCT, (2) WITH 3 EA. 1.25" INNERDUCT IN EACH CONDUIT.

2 EXISTING UTILITY MEDIUM VOLTAGE EQUIPMENT TO REMAIN AND BE PRESERVED.

3 APPROXIMATE ROUTING OF PRIMARY CONDUIT TO TRANSFORMER.

4 DROPPED FOOTING FOR FUTURE ACCESS OF ALL CONDUITS FROM SWITCHBOARD TO EQUIPMENT. COORDINATE WITH STRUCTURAL.

5 CONTRACTOR TO PROVIDE CONDUIT 1 FOOT AWAY FROM EXISTING SECTIONALIZER. CONTRACTOR TO COORDINATE WITH KAYSVILLE CITY POWER ONCE COMPLETED. KAYSVILLE CITY POWER TO INSTALL ELBOW INTO SECTIONALIZER.

6 HALFTONED RACEWAYS AND EQUIPMENT ARE SHOWN FOR REFERENCE ONLY AND NOT INCLUDED IN BID PACKAGE 1.

CRSA

PROJECT **24-038**

BID PACKAGE #1 2024-08-26

REVISIONS

NO.	DATE	DESCRIPTION

SPECTRUM ENGINEERS

324 S. State St., Suite 400
Salt Lake City, UT 84111
801-328-5151
www.spectrum-engineers.com
SE Project # 240296

REVIEWED FOR CODE COMPLIANCE
Thomas W Peterson
10/28/2024
DIVISION OF FACILITIES CONSTRUCTION AND MANAGEMENT

DTC WELDING TECH & FABRICATION BUILLDING

355 SOUTH 650 EAST
KAYSVILLE, UT 84037

LICENSED PROFESSIONAL ENGINEER
No. 12735266
Mario Sebastian Martinez
STATE OF UTAH
08/26/2024

ELECTRICAL SITE PLAN

ES101.1

(801) 355-5915

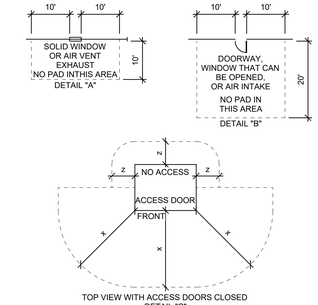

MINIMUM DISTANCE REQUIRED FROM PAD:

x = 10 FT. CLEAR AREA IN FRONT OF, ANY EQUIPMENT ACCESS DOOR OR OPENING TO ALLOW THE USE OF HOT STICKS. (SEE DIMENSIONS IN DETAIL "C". LOCATE PADMOUNTED EQUIPMENT WITH ACCESS DOORS AWAY FROM BUILDING WALLS OR OTHER BARRIERS TO ALLOW SAFE WORKING PRACTICES. IF THE EQUIPMENT ACCESS SIDE MUST FACE A WALL, ALLOW 10 FEET FOR WORKING CLEARANCE. NO VEGETATION OR TRIP HAZARDS IN THIS WORK SPACE ARE PERMITTED.)

y = 8 FT FROM ANY STRUCTURE OR ROOF OVERHANG CONSISTING OF COMBUSTIBLE MATERIAL. 3 FT TO NON-COMBUSTIBLE STRUCTURES HAVING NO OPENINGS CLOSER THAN 10 FT.

z = 3 FT CLEAR AREA ON NON-ACCESS SIDES OF THE EQUIPMENT TO ALLOW WORK SPACE. (SEE DIMENSIONS IN DETAILS "C".), 6' FROM ANY METALLIC OBJECT INCLUDING THE METERING EQUIPMENT, AND 8' FROM ANY COMBUSTIBLE SURFACE.

CLEARANCE GENERAL NOTES:

1. CLEARANCES: THE FRONT OF THE PAD SHOULD ALWAYS FACE AWAY FROM ADJACENT STRUCTURES AND BE FREE OF OBSTRUCTIONS. AT LEAST 3 FEET MUST SEPARATE THE EDGES OF THE PAD FROM ANY ADJACENT STRUCTURE. THE EDGES OF THE PAD MUST BE AT LEAST 10 FEET FROM ANY COMBUSTIBLE STRUCTURE. IF AN ADJACENT STRUCTURE HAS ANY OVERHANG OR EAVE WITHIN 27 VERTICAL FEET OF THE TOP OF THE PAD, CLEARANCES MUST BE MEASURED FROM THE OUTSIDE OF THE OVERHANG. THE PAD MUST NOT BE PLACED IN AN AREA 10 FEET IN LINE WITH OR 10 FEET TO EITHER SIDE OF ANY WINDOW IN AN ADJACENT STRUCTURE (SEE DETAIL "A"). CLEARANCE FOR A DOOR MUST BE 20 FEET IN LINE WITH IT AND 10 FEET ON THE SIDES (SEE DETAIL "B"). PADS MUST NOT BE PLACED WITHIN 15 FEET OF ANY VALVE OR WITHIN 25 FEET OF ANY PLUMBING OR STORAGE FACILITY CONTAINING FLAMMABLE MATERIAL. NO WALLS, FENCES, OR ANY OTHER OBSTRUCTIONS WILL BE PLACED WITHIN 3 FEET OF THE SIDES OR BACK OF THE PAD, OR WITHIN 10 FEET OF THE FRONT OF THE PAD (SEE DETAIL "C"). THE AREA IN FRONT OF THE PAD MUST HAVE 10 FEET OF CLEAR, LEVEL WORKING AREA FOR MAINTENANCE OF THE TRANSFORMER. THE PAD MAY NOT BE PLACED IN LINE WITH AN AIR INTAKE WITHIN 32 VERTICAL FEET OF THE SURFACE PAD. ALSO VERTICALLY, IT MUST NOT BE PLACED WITHIN 12 FEET OF A DOOR OR WINDOW. VAULTS SHALL BE LOCATED WITHIN 15 FEET OF A GRAVELED OR PAVED SURFACE SUITABLE FOR INCIDENTAL HEAVY TRUCK ACCESS.
2. BARRIERS: IF THE TRANSFORMER PAD IS TO BE LOCATED IN AREAS SUBJECT TO VEHICULAR TRAFFIC, (PARKING LOTS, DRIVEWAYS, ETC) CONTACT KAYSVILLE POWER FOR PROTECTIVE BARRIER REQUIREMENTS.
3. IF THE TRANSFORMER WILL NOT COVER THE CABLE OPENINGS ON THESE STANDARD PADS, SEAL THE SIDES OF THE CABLE OPENING TO FIT THE TRANSFORMER USING SACKRETE OR COMPARABLE.

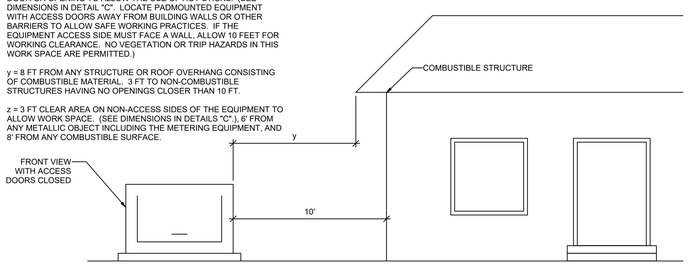

C1 TRANSFORMER CLEARANCE DETAIL

SCALE: NTS

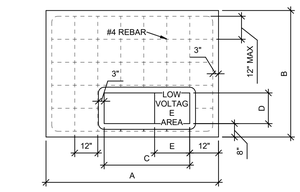

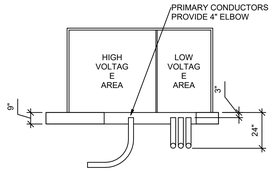

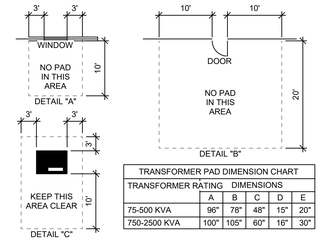

TRANSFORMER PAD DIMENSION CHART					
TRANSFORMER RATING	DIMENSIONS				
	A	B	C	D	E
75-500 KVA	96"	78"	48"	15"	20"
750-2500 KVA	100"	105"	60"	16"	30"

CONTRACTOR GENERAL NOTES:

1. SITE PREPARATION. ALL SOIL BENEATH THE PAD SITE MUST BE COMPACTED AND LEVEL PRIOR TO SETTING OR POURING THE PAD TO PREVENT SETTLING.
2. CONCRETE. STEEL REINFORCEMENT SHALL BE #4 BARS, PLACED ACCORDING TO THE DRAWING. THE PAD MUST BE POURED AT LEAST SEVEN FULL DAYS PRIOR TO SETTING THE TRANSFORMER. THE FINISHED SURFACE MUST BE COMPLETELY FLAT AND LEVEL. SEE STANDARD 73 036 FOR CONCRETE SPECIFICATIONS.
3. PREFABRICATION. THE PAD MAY EITHER BE CONSTRUCTED ON THE SITE OR PREFABRICATED ACCORDING TO SPECIFICATIONS.
4. CONDUIT WINDOW LAYOUT. LOW VOLTAGE CONDUITS SHALL BE FORMED AS TIGHTLY AS POSSIBLE AGAINST THE RIGHT SIDE OF THE OPENING AND SHALL IN NO CASE EXTEND FURTHER THAN 20" FROM THE RIGHT SIDE OF THE CONDUIT WINDOW ON THE SMALL PAD OR 30" ON THE LARGE PAD. NO MORE THAN 8 CONDUITS WILL BE USED ON THE LOW VOLTAGE SIDE (NOT INCLUDING THE METERING CONDUIT). DO NOT PUT ANY CONCRETE IN OR UNDER THE CONDUIT WINDOW. USE SOIL TO SEPARATE CONDUITS. BELL ENDS ARE REQUIRED FOR ALL METAL CONDUIT, BUT NOT FOR PLASTIC CONDUIT.
5. CLEARANCES. THE FRONT OF THE PAD SHOULD ALWAYS FACE AWAY FROM ADJACENT STRUCTURES AND BE FREE OF OBSTRUCTIONS. AT LEAST 3 FEET MUST SEPARATE THE EDGES OF THE PAD FROM ANY ADJACENT STRUCTURE. THE EDGES OF THE PAD MUST BE AT LEAST 10 FEET FROM ANY COMBUSTIBLE STRUCTURE. IF AN ADJACENT STRUCTURE HAS ANY OVERHANG OR EAVE WITHIN 27 VERTICAL FEET OF THE TOP OF THE PAD, CLEARANCES MUST BE MEASURED FROM THE OUTSIDE OF THE OVERHANG. THE PAD MUST NOT BE PLACED IN AN AREA 10 FEET IN LINE WITH OR 3 FEET TO EITHER SIDE OF ANY WINDOW IN AN ADJACENT STRUCTURE (SEE DETAIL "A"). CLEARANCE FOR A DOOR MUST BE 20 FEET IN LINE WITH IT AND 10 FEET ON THE SIDES (SEE DETAIL "B"). PADS MUST NOT BE PLACED WITHIN 15 FEET OF ANY VALVE OR WITHIN 20 FEET OF ANY PLUMBING OR STORAGE FACILITY CONTAINING FLAMMABLE MATERIAL. NO WALLS, FENCES, OR ANY OTHER OBSTRUCTIONS WILL BE PLACED WITHIN 3 FEET OF THE SIDES OR BACK OF THE PAD, OR WITHIN 10 FEET OF THE FRONT OF THE PAD (SEE DETAIL "C"). THE AREA IN FRONT OF THE PAD MUST HAVE 10 FEET OF CLEAR, LEVEL WORKING AREA FOR MAINTENANCE OF THE TRANSFORMER. THE PAD MAY NOT BE PLACED IN LINE WITH AN AIR INTAKE WITHIN 32 VERTICAL FEET OF THE SURFACE PAD. ALSO VERTICALLY, IT MUST NOT BE PLACED WITHIN 12 FEET OF A DOOR OR WINDOW.
6. BARRIERS. IF THE TRANSFORMER PAD IS TO BE LOCATED IN AREAS SUBJECT TO VEHICULAR TRAFFIC, (PARKING LOTS, DRIVEWAYS, ETC) CONTACT UTAH POWER & LIGHT FOR PROTECTIVE BARRIER REQUIREMENTS.
7. IF THE TRANSFORMER WILL NOT COVER THE CABLE OPENINGS ON THESE STANDARD PADS, SEAL THE SIDES OF THE CABLE OPENING TO FIT THE TRANSFORMER USING SAKRETE OR COMPARABLE.

A1 TRANSFORMER PAD DETAIL

SCALE: NTS

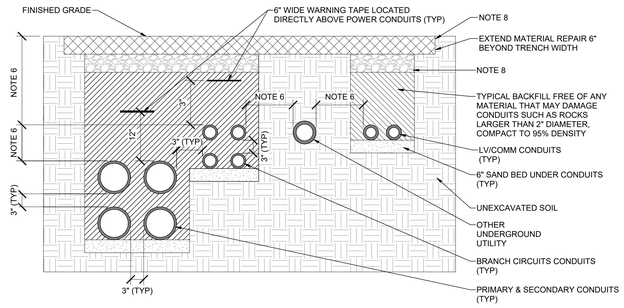

NOTES:

1. INSTALL CONDUITS PER LOCAL UTILITY REQUIREMENTS AND NEC.
2. ALL BENDS SHALL BE LARGE RADIUS.
3. PROVIDE WIDE SWEEP FIBERGLASS ELBOWS FOR UTILITY POWER CONDUITS.
4. ALL ABOVEGROUND CONDUIT IN AREAS WHERE DAMAGE MAY OCCUR, ALL STUBUPS AND THE FIRST 10' UNDERGROUND SHALL BE PVC WRAPPED RMC. ALL OTHER UNDERGROUND CONDUIT SHALL BE PVC SCH 40.
5. PROVIDE 2500-LB POLYPROPYLENE PULL ROPE WITH MEASUREMENT MARKS IN EMPTY CONDUITS.
6. TYPICAL DEPTHS UNLESS NOTED OTHERWISE: PRIMARY AND SECONDARY POWER = 36" MIN DEPTH; BRANCH CIRCUITS & LV/COMM = 24" MIN DEPTH.
7. MAINTAIN UTILITY SEPARATION AS SHOWN BELOW UNLESS NOTED OTHERWISE. FOR ALL OTHER UTILITIES NOT SHOWN, MAINTAIN A MINIMUM 18" CLEARANCE. UTILIZE VERTICAL MEASUREMENT WHEN CROSSING UTILITIES.
8. REPAIR EXISTING ASPHALT OR SURFACE REFER TO CIVIL SPECIFICATIONS, WHERE SPECIFICATIONS DO NOT DEFINE CONTRACTOR SHALL REPAIR TO MATCH EXISTING CONDITIONS OR REQUIREMENTS BELOW, WHICHEVER IS GREATER.

TURF/ PLANTER/ LANDSCAPE REPAIR
- TURF/PLANTER/LANDSCAPE
- 12" TOPSOIL

SANITARY SEWER & NON-WATER
-60" HORIZONTALLY
-18" VERTICALLY

WATER
-36" HORIZONTALLY
-18" VERTICALLY

STORM DRAIN
-60" HORIZONTALLY
-18" VERTICALLY

LOW PRESSURE GAS LINE
-36" HORIZONTALLY
-18" VERTICALLY

HIGH PRESSURE GAS LINE
-0-600V - 24" VERTICALLY
-600V - 30" VERTICALLY
-600V - 22,000V - 30" VERTICALLY
-22,001V - 40,000V - 36" VERTICALLY

TELECOM & LOW VOLTAGE
-12" HORIZONTALLY
-12" VERTICALLY

CONCRETE REPAIR
- 5" CEMENT CONCRETE
- 6" UNTREATED BASE COURSE COMPACT TO 95% MODIFIED PROCTOR
- 6" PIT RUN GRAVE COMPACT TO 95% MODIFIED PROCTOR
-12" AGGREGATE BASE COURSE UNDER ROADS, COMPACT TO 95% MODIFIED PROCTOR

ASPHALT REPAIR
- 3" STANDARD ASPHALT
- 4" UNTREATED BASE COURSE COMPACT TO 95% MODIFIED PROCTOR
- 6" PIT RUN GRAVE COMPACT TO 95% MODIFIED PROCTOR

A3 TYPICAL POWER AND TELECOM CONDUIT DIRECT BURY DETAIL

SCALE: 1/8" = 1'-0"

GENERAL SHEET NOTES

1. THE ELECTRICAL CONTRACTOR SHALL MEET WITH AND COORDINATE WITH ALL SERVICE PROVIDERS (POWER, COMMUNICATION, CABLE/SATELLITE, ETC.) TO THE FACILITY ON SITE PRIOR TO ANY WORK BEING PREFORMED. CONFIRM WITH EACH SERVICE PROVIDER EXACT LOCATIONS OF EQUIPMENT AND ROUTING. COMPLY WITH ALL SERVICE PROVIDER'S CURRENT STANDARDS AND REQUIREMENTS. PROVIDE THE REQUIRED EQUIPMENT, RACEWAYS, BOXES, CABLE, ETC. AS REQUIRED BY THE SERVICE PROVIDER WHETHER SHOWN ON THE DRAWINGS OR NOT.
2. CONTRACTOR IS RESPONSIBLE FOR ALL TRENCHING, BACKFILL, AND COMPACTION ASSOCIATED TO ALL ELECTRICAL UNDERGROUND RACEWAYS AND CABLES. COORDINATE WITH ARCHITECTURAL AND CIVIL DRAWINGS. SEE UNDERGROUND RACEWAY DETAILS FOR REQUIREMENTS FOR EACH TRENCH.
3. THE ELECTRICAL CONTRACTOR SHALL HAVE ANY AND ALL CONCRETE POLE BASES AND SLABS REVIEWED BY A STRUCTURAL ENGINEER AND SHALL MODIFY DESIGN PER STRUCTURAL ENGINEER'S AND OR AHJ'S RECOMMENDATIONS.
4. THE ELECTRICAL CONTRACTOR IS RESPONSIBLE FOR ALL CONCRETE/ASPHALT CUTTING AND REPLACEMENT OF CONCRETE/ASPHALT TO MATCH EXISTING ASSOCIATED WITH UNDERGROUND RACEWAYS PROVIDED AS PART OF THIS PROJECT.
5. REFER TO PLANS FOR CONSTRAINTS ON PHYSICAL DIMENSIONS AND CLEARANCE REQUIREMENTS OF EQUIPMENT. PROVIDE EQUIPMENT DIMENSIONS THAT FALL WITHIN THE CONSTRAINTS OF EACH SPECIFIC LOCATION.
6. SERVICE EQUIPMENT SHALL BE LEGIBLY MARKED IN THE FIELD WITH THE MAXIMUM AVAILABLE FAULT CURRENT. VERIFY OR RE-CALCULATE THE AVAILABLE FAULT CURRENT AT THE SERVICE WHERE MODIFICATIONS TO THE ELECTRICAL INSTALLATION OCCUR. PLEASE INCLUDE NOTES IN THE ELECTRICAL DRAWINGS OR SUPPLY CALCULATIONS WHERE APPLICABLE. SEE NEC 110.24. (B)
7. ALL UNDERGROUND RACEWAYS SHALL UTILIZE GRADUAL SWEEPS WHERE POSSIBLE. PROVIDE FACTORY LONG SWEEP BENDS ONLY WHERE ABSOLUTELY NECESSARY OR NOTED.
8. CONTRACTOR SHALL ADJUST DEPTH OF RACEWAYS DEEPER AS NECESSARY TO AVOID CONFLICTS WITH OTHER UTILITIES AND MAINTAIN A SEPARATION OF NO LESS THAN 1 FOOT FROM ALL OTHER UTILITIES CROSSINGS UNLESS NOTED OTHERWISE.
9. ALL ELECTRICAL GEAR AND EQUIPMENT (GENERATOR, TRANSFORMER, SWITCHBOARDS, PANELBOARDS, DISCONNECTS, ENCLOSURES, ETC.) LOCATED OUTDOOR OR EXPOSED TO WEATHER SHALL BE NEMA 3R RATED UNLESS NOTED OTHERWISE.

SHEET KEYNOTES

CRSA

PROJECT **24-038**

BID PACKAGE #1 2024-08-26

REVISIONS

NO.	DATE	DESCRIPTION

SPECTRUM ENGINEERS
324 S. State St., Suite 400
Salt Lake City, UT 84111
801-328-5151
www.spectrum-engineers.com
SE Project # 240296

REVIEWED FOR CODE COMPLIANCE
Thomas W Peterson
10/28/2024
DIVISION OF FACILITIES CONSTRUCTION AND MANAGEMENT

DTC WELDING TECH & FABRICATION BUILLDING

355 SOUTH 650 EAST
KAYSVILLE, UT 84037

LICENSED PROFESSIONAL ENGINEER No. 12735266 Mario Sebastian Martinez STATE OF UTAH
08/26/2024

ELECTRICAL DETAILS

ES501.1

(801) 355-5915

8/30/2024 4:02:43 PM

SERVICE LOAD CALCULATIONS	
480Y/277 V SERVICE CALCULATION	
NEW CONSTRUCTION AREA FT²	16,000
ELECTRICAL SERVICE VOLTAGE (V)	480
ELECTRICAL SERVICE PHASE (PH)	3

						NEC DEMAND			
DESCRIPTION:	KW	VA/FT²	HP	PF	KVA	FACTOR	LOAD (KVA)	LOAD (A)	NOTES
A. LIGHTING LOAD		1.5			24.0	125%	30	36	1
B. MOTOR & HVAC LOAD					99.5	100%	99	120	3
C. MISCELLANEOUS LOAD		0.5			8.0	100%	8	10	
D. LARGEST MOTOR			30		29.1	25%	7	9	4
E. WELDERS					903.6	100%	904	1087	
F. WELDING EQUIPMENT					537.0	100%	537	646	
G. EXTRATION SYSTEM					266.0	100%	266	320	
H. 208/120V LOAD					107.2	100%	107	129	
						TOTAL	1959	2356	
						BUILDING SERVICE SIZE (A)		2500	
						SERVICE SPARE CAPACITY (%)		6%	

208Y/120 V SERVICE CALCULATION	
NEW CONSTRUCTION AREA FT²	16,000
ELECTRICAL SERVICE VOLTAGE (V)	208
ELECTRICAL SERVICE PHASE (PH)	3

						NEC DEMAND			
DESCRIPTION:	KW	VA/FT²	HP	PF	KVA	FACTOR	LOAD (KVA)	LOAD (A)	NOTES
A. RECEPTACLE LOAD FIRST 10 KVA					10.0	100%	10	28	2
B. RECEPTACLE LOAD REMAINING >10 KVA		2			32.0	50%	16	44	2
C. MOTOR & HVAC LOAD					29.7	100%	30	82	3
D. SPECIFIC APPLIANCES OR LOADS		1			16.0	100%	16	44	
E. WELDING EQUIPMENT					19.6	100%	20	54	
F. MISCELLANEOUS LOAD		1			16.0	100%	16	44	
						TOTAL	107	298	
						BUILDING SERVICE SIZE (A)		400	
						SERVICE SPARE CAPACITY (%)		26%	

NOTES
1. LIGHTING LOADS BASED ON NEC TABLE 220.12 VALUE FOR SCHOOLS OR ACTUAL LOAD WHICHEVER IS GREATER
2. LOAD BASED ON ACTUAL CALCULATED LOAD OR 1 VA/S.F. WHICHEVER IS GREATER. RECEPTACLE DEMAND FACTOR BASED ON NEC TABLE 220.44.
3. MOTOR LOAD CALCULATED AS PER NEC 220.50, 430.24, 430.25, 430.26, AND 440.6.
4. LARGEST MOTOR LOAD AS PER NEC 220.50, 430.24.

EQUIPMENT NAMEPLATE SCHEDULE

EQUIPMENT ID SCHEME	FIRST DIGIT - BUILDING LEVEL (0, 1, 2, ETC) SECOND DIGIT - PANEL TYPE L - (120/208) H - (277/480) THIRD DIGIT - M - MECHANICAL L - LIGHTING W - WELDING EQUIP G - GENERAL POWER FOURTH DIGIT - SEQUENCE # (1,2,3,...) OR DISTRIBUTION
LABEL FORMAT	[NAME] [SYSTEM] [VOLTAGE] [FED FROM] [SOURCE(S)]
LABEL EXAMPLE	PANEL "4LA1" STANDBY POWER 120/208V FED FROM BUS-A / XFMR 4TA
OTHER	EXCEPTIONS: MDP - MAIN DISTRIBUTION BOARD

COLOR SCHEME

		NAMEPLATE COLOR	
SYSTEM	EQUIPMENT	TEXT	BACKGROUND
NORMAL POWER	ALL GEAR NOT INCLUDED BELOW	WHITE	BLACK

BRANCH CIRCUIT CONDUCTOR AND CONDUIT SIZING TABLE

CIRCUIT AMPACITY/VOLTAGE	CIRCUIT LENGTH	CONDUCTOR SIZE (PHASE, NEUTRAL AND GR)	CONDUIT SIZE
20A/120V	0' - 60'	#12 AWG	0.75" Ø
20A/120V	60' - 95'	#10 AWG	0.75" Ø
20A/120V	95' - 150'	#8 AWG	1" Ø
20A/120V	150' - 240'	#6 AWG	1.25" Ø
20A/277V	0' - 140'	#12 AWG	0.75" Ø
20A/277V	140' - 220'	#10 AWG	0.75" Ø
20A/277V	220' - 350'	#8 AWG	1" Ø
20A/277V	350' - 550'	#6 AWG	1.25" Ø

NOTES:

1. WIRE SIZING IS BASED ON COPPER CONDUCTORS SUPPLYING A 20A, 120V CIRCUIT AT THE INDICATED VOLTAGE, ASSUMED TO BE 80% LOADED (16A), WITH MAXIMUM VOLTAGE DROP OF 3% AT THE LOAD.
2. DOWN-SIZED WIRE AT DEVICE/LOAD AS REQUIRED AND TERMINATE CONDUCTORS IN A SAFE AND CODE COMPLIANT MANNER.
3. CONDUIT SIZE IS BASED ON A MAXIMUM OF 3 CIRCUITS PER CONDUIT, EACH WITH A SEPARATE NEUTRAL CONDUCTOR.

ALUMINUM CONDUCTOR AND CONDUIT SCHEDULE

SCHEDULE NUMBER
SUBSCRIPT (NOTE 5)
(E.G.) 5 IG

SYM	AMP	CONDUIT SIZE	CONDUCTOR (NOTE 1) QTY	SIZE	G	IG	SE	NOTES
1A								
2A								
3A								
4A								
5A								
6A								
7A								
8A								
9A								
10A								
11A								
12A								
13A								
14A								
15A								
16A								
17A								
18A								
19A								
20A								
21A	130	2	3	2/0	4	1/0	4	2,7
22A	130	2	4	2/0	4	1/0	4	2,7
23A	150	2	3	3/0	4	1/0	4	2,7
24A	150	2	4	3/0	4	1/0	4	2,7
25A	175	2	3	4/0	4	1/0	2	2,7
26A	175	2.50	4	4/0	4	1/0	2	2,7
27A	200	2.50	3	250	4	1/0	2	2,7
28A	200	3	4	250	4	1/0	2	2,7
29A	230	2.50	3	300	2	1/0	1/0	2,7
30A	230	3	4	300	2	1/0	1/0	2,7
31A	250	3	3	350	2	2/0	1/0	2,7
32A	250	3	4	350	2	2/0	1/0	2,7
33A	310	3	3	500	1	3/0	1/0	2,7
34A	310	4	4	500	1	3/0	1/0	2,7
35A	380	2 EA 2.50	3	250	1	4/0	3/0	2,7
36A	380	2 EA 3	4	250	1	4/0	3/0	2,7
37A	400	2 EA 2.50	3	250	1/0	4/0	3/0	2,7
38A	400	2 EA 2.50	4	250	1/0	4/0	3/0	2,7
39A	500	2 EA 3	3	350	1/0	300	3/0	2,4,7
40A	500	2 EA 3	4	350	1/0	300	3/0	2,4,7
41A	620	2 EA 3	3	500	3/0	300	3/0	2,4,7
42A	620	2 EA 4	4	500	3/0	300	3/0	2,4,7
43A	750	3 EA 3	3	350	3/0	300	4/0	2,4,7
44A	750	3 EA 3	4	350	3/0	300	4/0	2,4,7
45A	810	3 EA 3	3	400	4/0	300	250	2,4,7
46A	810	3 EA 4	4	400	4/0	300	250	2,4,7
47A	1000	4 EA 3	3	350	4/0	300	250	4,7
48A	1000	4 EA 3	4	350	4/0	300	250	4,7
49A	-	-	-	-	-	-	-	-
50A	1140	4 EA 4	4	500	250	300	250	4,7
51A	1240	4 EA 4	3	500	350	300	250	4,7
52A	1240	4 EA 4	4	500	350	300	250	4,7
53A	1620	6 EA 4	4	400	400	350	250	4,7
54A	2170	7 EA 4	4	500	400	400	500	4,7
55A	2695	7 EA 4	4	750	600	750	750	4,7
56A	3080	8 EA 4	4	750	600	750	750	4,7
57A	4235	11 EA 4	4	750	800	750	750	4,7
58A	1200	5 EA 4	-	-	-	-	-	6
59A	3000	10 EA 6	-	-	-	-	-	6
60A	-	10 EA 4	-	-	-	-	-	6

CONDUCTOR AND CONDUIT SCHEDULE NOTES

1 CONDUCTORS SHOWN ARE SHOWN FOR EACH CONDUIT WITH MODIFICATIONS AS NOTED IN NOTE 5. ALL CONDUCTORS SHOWN ARE THWN UNLESS OTHERWISE NOTED.
2 PROVIDE EQUIPMENT GROUND CONDUCTORS PER TABLE 250-122 WHEN CIRCUIT BREAKERS ARE SIZED GREATER THAN AMPERE RATING SHOWN IN TABLE.
3 PROVIDE #10 NEUTRALS FOR MULTIWIRE BRANCH CIRCUITS SERVING COMPUTERS.
4 GROUND (G) CONDUCTOR MAY BE DELETED ON SERVICE ENTRANCE CONDUCTORS.
5 SYMBOL SUBSCRIPTS:
"2N": INCLUDE TWO NEUTRAL CONDUCTORS SIZED AS SCHEDULED FOR PHASE AND NEUTRAL CONDUCTORS WHERE THE CONDUCTOR IS #1/0 OR LARGER. INCLUDE A SINGLE 200% RATED CONDUCTOR THAT IS TWICE THE AMPACITY OF THE SCHEDULED PHASE AND NEUTRAL CONDUCTOR WHERE THE CONDUCTOR IS BELOW #1/0 IN SIZE.
"CI": PROVIDE CIRCUIT INTEGRITY CABLE; TYPE TWO-HOUR FIRE RESISTIVE CABLES IN CONDUIT OR PROVIDE FEEDER ENCASED IN CONCRETE.
"FG" FULL SIZE GROUND, SIZE EQUIPMENT GROUNDING CONDUCTOR TO BE SAME SIZE AS THE PHASE CONDUCTORS.
"HH": NEUTRAL CURRENTS EXIST DUE TO HIGH HARMONIC "NONLINEAR" LOADS. CURRENT CARRYING CONDUCTORS DERATED ACCORDINGLY. PROVIDE THE IG/HH SIZE FOR THE EQUIPMENT GROUNDING CONDUCTOR.
"IG": INCLUDE IG (INSULATED/ISOLATED GROUND CONDUCTOR) SCHEDULED ALONG WITH THE GROUND OF EQUIPMENT GROUND CONDUCTOR.
"MC": PROVIDE FEEDER IN METAL-CLAD CABLE; TYPE MC IN PLACE OF SINGLE CONDUCTORS IN CONDUIT.
"SE": SUBSTITUTE "SE" CONDUCTOR FOR "G" CONDUCTOR SHOWN, WHICH IS SIZED FOR THE GROUNDING OF THE SECONDARY OF THE SEPARATELY DERIVED SYSTEM.
"SER": PROVIDE SERVICE-ENTRANCE CABLE; TYPE SE OR SER IN PLACE OF SINGLE CONDUCTORS IN CONDUIT.
6 RACEWAY ONLY. CONDUCTORS PROVIDED BY UTILITY.
7 ALUMINUM CONDUCTORS NOT TO BE USED FOR CONNECTION TO MOTORS OR MOTOR DRIVEN EQUIPMENT.

GENERAL SHEET NOTES

1 PROVIDE NEMA 3R ENCLOSURES FOR EQUIPMENT LOCATED OUTDOORS. REFER TO PLANS FOR EQUIPMENT LOCATIONS.
2 REFER TO PLANS FOR CONSTRAINTS ON PHYSICAL DIMENSIONS AND CLEARANCE REQUIREMENTS OF EQUIPMENT. PROVIDE EQUIPMENT DIMENSIONS THAT FALL WITHIN THE CONSTRAINTS OF EACH SPECIFIC LOCATION.
3 ALL EQUIPMENT SHALL BE CONSTRUCTED AND BRACED FOR THE SEISMIC CONDITIONS OF THE PROJECT. REFER TO ELECTRICAL SPECIFICATIONS FOR REQUIREMENTS.
4 PROVIDE PERFORMANCE TESTING FOR GROUND-FAULT PROTECTION SYSTEMS ON SITE WITH A WRITTEN RECORD OF THIS TEST SUBMITTED TO THE AUTHORITY HAVING JURISDICTION PER NEC 230.95(C).

SHEET KEYNOTES

1 CONTRACTOR SHALL PROVIDE 4" CONDUIT WITH PULL STRING. UTILITY TO INSTALL CABLING. CONTRACTOR SHALL PROVIDE WIDE SWEEP FIBERGLASS ELBOWS.
2 CONTRACTOR TO INSTALL TRANSFORMER PAD. UTILITY TO PROVIDE TRANSFORMER.
3 PROVIDE (2) 3" CONDUITS AND 1" CONDUIT TO OUTSIDE OF SWITCHBOARD PAD FOR FUTURE POWER FACTOR CORRECTING CAPACITORS.
4 KCP WILL FURNISH METER BASE WITH CABLING. CONTRACTOR TO INSTALL THE METER BASE AND CONDUITS. KCP TO CONNECT AND TERMINATE ALL WIRING.
5 EQUIPMENT ASSOCIATED WITH BID PACKAGE 1.
6 PROVIDE QUANTITY OF SPARE CIRCUIT BREAKERS AS SHOWN.

COPPER CONDUCTOR AND CONDUIT SCHEDULE

SCHEDULE NUMBER
SUBSCRIPT (NOTE 5)
(E.G.) 5 IG

SYM	AMP	HH AMPS	CONDUIT SIZE	CONDUCTOR (NOTE 1) QTY	SIZE	G	IG/HH	SE	NOTES
1	20	-	.75	2	12	12	12	8	2
2	20	-	.75	3	12	12	12	8	2,3
3	20	24	.75	4	12	12	12	8	2,3
4	30	-	.75	2	10	10	10	8	2
5	30	-	.75	3	10	10	10	8	2
6	30	32	.75	4	10	10	10	8	2
7	40	-	1	2	8	10	8	6	2
8	40	-	1	3	8	10	8	6	2
9	40	44	1	4	8	10	8	6	2
10	55	-	1	2	6	10	8	4	2
11	55	-	1	3	6	10	8	4	2
12	55	60	1.25	4	6	10	8	4	2
13	70	-	1	2	4	8	4	2	2
14	70	-	1.25	3	4	8	4	2	2
15	70	76	1.25	4	4	8	4	2	2
16	85	-	1.25	2	3	8	3	2	2
17	85	-	1.25	3	3	8	3	2	2
18	85	92	1.25	4	3	8	3	2	2
19	95	-	1.25	3	2	8	2	2	2
20	95	104	1.50	4	2	8	2	2	2
21	130	-	1.50	3	1	6	2	2	2
22	130	116	1.50	4	1	6	2	2	2
23	150	-	2	3	1/0	6	2	1/0	2
24	150	136	2	4	1/0	6	2	1/0	2
25	175	-	2	3	2/0	6	2	2/0	2
26	175	156	2	4	2/0	6	2	2/0	2
27	200	-	2	3	3/0	6	2	2/0	2
28	200	180	2.50	4	3/0	6	2	2/0	2
29	230	-	2.50	3	4/0	4	2	2/0	2
30	230	208	2.50	4	4/0	4	2	2/0	2
31	255	-	2.50	3	250	4	1	2/0	2
32	255	232	2.50	4	250	4	1	2/0	2
33	310	-	3	3	350	3	1/0	3/0	2
34	310	280	3	4	350	3	1/0	3/0	2
35	380	-	3.50	3	500	3	3/0	3/0	2
36	380	344	4	4	500	3	3/0	3/0	2
37	400	-	2 EA 2	3	3/0	3	3/0	3/0	2
38	400	360	2 EA 2.50	4	3/0	3	3/0	3/0	2
39	510	-	2 EA 2.50	3	250	1	4/0	3/0	2
40	510	464	2 EA 3	4	250	1	4/0	3/0	2
41	620	-	2 EA 3	3	350	1/0	4/0	3/0	2,4
42	620	560	2 EA 3	4	350	1/0	4/0	3/0	2,4
43	760	-	2 EA 3.50	3	500	1/0	4/0	3/0	2,4
44	760	688	2 EA 4	4	500	1/0	4/0	3/0	2,4
45	855	-	3 EA 3	3	300	2/0	4/0	3/0	2,4
46	855	768	3 EA 3	4	300	2/0	4/0	3/0	2,4
47	1000	-	3 EA 3.50	3	400	2/0	4/0	3/0	4
48	1000	912	3 EA 3.50	4	400	2/0	4/0	3/0	4
49	1140	-	3 EA 4	3	500	3/0	4/0	3/0	4
50	1140	1032	3 EA 4	4	500	3/0	4/0	3/0	4
51	1240	-	4 EA 3	3	350	3/0	4/0	3/0	4
52	1240	1120	4 EA 3	4	350	3/0	4/0	3/0	4
53	1675	1520	5 EA 4	4	400	4/0	4/0	4/0	4
54	2010	1824	6 EA 4	4	400	250	250	250	4
55	2660	2408	7 EA 4	4	500	350	350	350	4
56	3040	2752	8 EA 4	4	500	500	500	500	4
57	4180	3784	11 EA 4	4	500	500	500	500	4
58	1200	-	5 EA 4	-	-	-	-	-	6
59	3000	-	10 EA 6	-	-	-	-	-	6
60	-		10 EA 4	-	-	-	-	-	6

CONDUCTOR AND CONDUIT SCHEDULE NOTES

1. CONDUCTORS SHOWN ARE SHOWN FOR EACH CONDUIT WITH MODIFICATIONS AS NOTED IN NOTE 5. ALL CONDUCTORS SHOWN ARE THWN UNLESS OTHERWISE NOTED.
2. PROVIDE EQUIPMENT GROUND CONDUCTORS PER TABLE 250-122 WHEN CIRCUIT BREAKERS ARE SIZED GREATER THAN AMPERE RATING SHOWN IN TABLE.
3. PROVIDE #10 NEUTRALS FOR MULTIWIRE BRANCH CIRCUITS SERVING COMPUTERS.
4. GROUND (G) CONDUCTOR MAY BE DELETED ON SERVICE ENTRANCE CONDUCTORS.
5. SYMBOL SUBSCRIPTS:
"2N": INCLUDE TWO NEUTRAL CONDUCTORS SIZED AS SCHEDULED FOR PHASE AND NEUTRAL CONDUCTORS WHERE THE CONDUCTOR IS #1/0 OR LARGER. INCLUDE A SINGLE 200% RATED CONDUCTOR THAT IS TWICE THE AMPACITY OF THE SCHEDULED PHASE AND NEUTRAL CONDUCTOR WHERE THE CONDUCTOR IS BELOW #1/0 IN SIZE.
"CI": PROVIDE CIRCUIT INTEGRITY CABLE; TYPE TWO-HOUR FIRE RESISTIVE CABLES IN CONDUIT OR PROVIDE FEEDER ENCASED IN CONCRETE.
"FG" FULL SIZE GROUND, SIZE EQUIPMENT GROUNDING CONDUCTOR TO BE SAME SIZE AS THE PHASE CONDUCTORS.
"HH": NEUTRAL CURRENTS EXIST DUE TO HIGH HARMONIC "NONLINEAR" LOADS. CURRENT CARRYING CONDUCTORS DERATED ACCORDINGLY. PROVIDE THE IG/HH SIZE FOR THE EQUIPMENT GROUNDING CONDUCTOR.
"IG": INCLUDE IG (INSULATED/ISOLATED GROUND CONDUCTOR) SCHEDULED ALONG WITH THE GROUND OF EQUIPMENT GROUND CONDUCTOR.
"MC": PROVIDE FEEDER IN METAL-CLAD CABLE; TYPE MC IN PLACE OF SINGLE CONDUCTORS IN CONDUIT.
"SE": SUBSTITUTE "SE" CONDUCTOR FOR "G" CONDUCTOR SHOWN, WHICH IS SIZED FOR THE GROUNDING OF THE SECONDARY OF THE SEPARATELY DERIVED SYSTEM.
"SER": PROVIDE SERVICE-ENTRANCE CABLE; TYPE SE OR SER IN PLACE OF SINGLE CONDUCTORS IN CONDUIT.
6. RACEWAY ONLY. CONDUCTORS PROVIDED BY UTILITY.

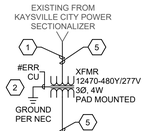

A1 ONE-LINE DIAGRAM

SCALE: NTS

8/30/2024 4:02:45 PM

CRSA

PROJECT 24-038

BID PACKAGE #1 2024-08-26

REVISIONS

NO.	DATE	DESCRIPTION

SPECTRUM ENGINEERS
324 S. State St., Suite 400
Salt Lake City, UT 84111
801-328-5151
www.spectrum-engineers.com
SE Project # 240296

REVIEWED FOR CODE COMPLIANCE
Thomas W Peterson
10/28/2024
DIVISION OF FACILITIES CONSTRUCTION AND MANAGEMENT

DTC WELDING TECH & FABRICATION BUILLDING

355 SOUTH 650 EAST
KAYSVILLE, UT 84037

LICENSED PROFESSIONAL ENGINEER
No. 12735266
Mario Sebastian Martinez
STATE OF UTAH
08/26/2024

ONE-LINE DIAGRAM

EP601.1

(801) 355-5915