DAVIS TECHNICAL COLLEGE

Davis Technical College
Welding Technology Building
DFCM Project No. 24378220

Project Manual
November 1, 2024 **Bid Package #2**

BLANK PAGE

TABLE OF CONTENTS

DIVISION 00 – PROCUREMENT AND CONTRACTING REQUIREMENTS

000000	DFCM GENERAL CONDITIONS
	DFCM SUPPLEMENTAL CONDITIONS – DEFECTIVE CONSTRUCTION
	DFCM SUPPLEMENTAL CONDITIONS – DRUG & ALCOHOL TESTING
	DFCM SUPPLEMENTAL CONDITIONS – HEALTH INSURANCE
	DFCM SUPPLEMENTAL CONDITIONS – ILLEGAL IMMIGRATION
	DFCM SUPPLEMENTAL CONDITIONS – ILLEGAL IMMIGRATION

DIVISION 01 - GENERAL REQUIREMENTS

011000	SUMMARY
012000	PRICE AND PAYMENT PROCEDURES
012100	ALLOWANCES
012500	SUBSTITUTION PROCEDURES
013000	ADMINISTRATIVE REQUIREMENTS
014000	QUALITY REQUIREMENTS
014100	REGULATORY REQUIREMENTS
015000	TEMPORARY FACILITIES AND CONTROLS
015100	TEMPORARY UTILITIES
015213	FIELD OFFICES AND SHEDS
015713	TEMPORARY EROSION AND SEDIMENT CONTROL
016000	PRODUCT REQUIREMENTS
017000	EXECUTION AND CLOSEOUT REQUIREMENTS
017419	CONSTRUCTION WASTE MANAGEMENT AND DISPOSAL
017800	CLOSEOUT SUBMITTALS
017900	DEMONSTRATION AND TRAINING
019113	GENERAL COMMISSIONING
019115	BUILDING ENCLOSURE COMMISSIONING REQUIREMENTS
019117	BUILDING ENCLOSURE FUNCTIONAL PERFORMANCE TESTING REQUIREMENTS

DIVISION 03 - CONCRETE

031000	CONCRETE FORMING AND ACCESSORIES
033000	CAST-IN-PLACE CONCRETE
033500	CONCRETE FINISHING

DIVISION 04 - MASONRY

042000	**UNIT MASONRY**
042613	**MASONRY VENEER**

DIVISION 05 - METALS

051200	**STRUCTURAL STEEL FRAMING**
052100	**STEEL JOIST FRAMING**
053100	**STEEL DECKING**
054000	**COLD-FORMED METAL FRAMING**
055000	**METAL FABRICATIONS**
055133	**METAL LADDERS**
055213	**PIPE AND TUBE RAILINGS**

DIVISION 06 - WOOD, PLASTICS, AND COMPOSITES

061053	**MISCELLANEOUS ROUGH CARPENTRY**
064100	**ARCHITECTURAL WOOD CASEWORK**

DIVISION 07 - THERMAL AND MOISTURE PROTECTION

070543	**CLADDING SUPPORT SYSTEMS**
071113	**BITUMINOUS DAMPPROOFING**
071900	**WATER REPELLENTS**
072100	**THERMAL INSULATION**
072119	**FOAMED-IN-PLACE INSULATION**
072700	**AIR BARRIERS**
074113	**METAL ROOF PANELS**
074213.16	**METAL PLATE WALL PANELS**
074213.23	**METAL COMPOSITE MATERIAL WALL PANELS**
075400	**THERMOPLASTIC MEMBRANE ROOFING**
076200	**SHEET METAL FLASHING AND TRIM**
077200	**ROOF ACCESSORIES**
079200	**JOINT SEALANTS**

DIVISION 08 - OPENINGS

081113	**HOLLOW METAL DOORS AND FRAMES**
081416	**FLUSH WOOD DOORS**
083100	**ACCESS DOORS AND PANELS**
083613	**SECTIONAL DOORS**
084313	**ALUMINUM-FRAMED STOREFRONTS**

087100 DOOR HARDWARE
088000 GLAZING

DIVISION 09 - FINISHES
092116 GYPSUM BOARD ASSEMBLIES
093000 TILING
097200 DRY-ERASE WALLCOVERING
099113 EXTERIOR PAINTING
099123 INTERIOR PAINTING
099600 HIGH-PERFORMANCE COATINGS

DIVISION 10 - SPECIALTIES
102113.13 METAL TOILET COMPARTMENTS
102600 WALL AND DOOR PROTECTION
102800 TOILET, BATH, AND LAUNDRY ACCESSORIES
104400 FIRE PROTECTION SPECIALTIES
105617 WALL MOUNTED STANDARDS AND SHELVING
105723 CLOSET AND UTILITY SHELVING

DIVISION 11 - EQUIPMENT
115213 PROJECTION SCREENS
115314 FUME EXTRACTORS
115700 VOCATIONAL SHOP EQUIPMENT

DIVISION 12 - FURNISHINGS
122413 ROLLER WINDOW SHADES
124813 ENTRANCE FLOOR MATS AND FRAMES

DIVISION 21 - FIRE SUPPRESSION
210500 COMMON WORK RESULTS FOR FIRE SUPPRESSION
210523 GENERAL-DUTY VALVES FOR WATER-BASED FIRE-SUPPRESSION PIPING
210800 FIRE SUPPRESSION SYSTEMS COMMISSIONING
211300 FIRE-SUPPRESSION SPRINKLER SYSTEMS

DIVISION 22 - PLUMBING
220000 – GENERAL PLUMBING REQUIREMENTS
220100 OPERATION AND MAINTENANCE OF PLUMBING

220519 – METERS AND GAGES FOR PLUMBING PIPING
220523 DUTY VALVES FOR PLUMBING PIPING
220529 – HANGERS AND SUPPORTS FOR PLUMBING PIPING AND EQUIPMENT
220548 VIBRATION AND SEISMIC CONTROL FOR PLUMBING PIPING AND EQUIPMENT
220553 – IDENTIFICATION FOR PLUMBING PIPING AND EQUIPMENT
220700 PLUMBING INSULATION
220800 PLUMBING SYSTEMS COMMISSIONING
221000 – GENERAL PIPES AND FITTINGS
221100 – FACILITY WATER DISTRIBUTION
221123 - NATURAL GAS PIPING
221300 – FACILITY SANITARY SEWERAGE
221400 – FACILITY STORM DRAINAGE
221500 COMPRESSED AIR SYSTEMS
221519 AIR COMPRESSORS
221800 – SPECIAL GASES PIPING SYSTEMS
223436 – COMMERCIAL GAS DOMESTIC WATER HEATERS
224000 - PLUMBING FIXTURES

DIVISION 23 - HEATING, VENTILATING, AND AIR-CONDITIONING (HVAC)
230000 GENERAL MECHANICAL REQUIREMENTS
230100 OPERATION AND MAINTENANCE MANUALS
230505 MECHANICAL FIRESTOPPING
230513 MOTORS, DRIVES AND ELECTRICAL REQUIREMENTS FOR MECHANICAL WORK
230514 ELECTRIC HEATERS
230529 MECHANICAL SUPPORTING DEVICES
230548 MECHANICAL SOUND, VIBRATION AND SEISMIC CONTROL
230553 MECHANICAL IDENTIFICATION
230593 TESTING, ADJUSTING AND BALANCING
230700 MECHANICAL INSULATION
230800 COMMISSIONING OF HVAC
230800 MECHANICAL SYSTEMS COMMISSIONING
230900 MECHANICAL CONTROL SYSTEMS
230923 DIRECT DIGITAL CONTROL SYSTEMS (DDC)
230933 ELECTRIC CONTROL SYSTEMS
232300 REFRIGERATION PIPING AND EQUIPMENT
233100 DUCTWORK

233300 DUCTWORK ACCESSORIES
233423 POWER VENTILATORS
233600 AIR TERMINAL UNITS
233713 AIR OUTLETS AND INLETS
237300 PACKAGED ROOFTOP UNITS
237350 EVAPORATIVE COOLING
238300 GAS FIRED HEATING SYSTEMS

DIVISION 26 - ELECTRICAL
260500 COMMON WORK RESULTS FOR ELECTRICAL
260519 LOW-VOLTAGE ELECTRICAL POWER CONDUCTORS AND CABLES
260526 GROUNDING AND BONDING FOR ELECTRICAL SYSTEMS
260529 HANGERS AND SUPPORTS FOR ELECTRICAL SYSTEMS
260533 RACEWAY AND BOXES FOR ELECTRICAL SYSTEMS
260536 CABLE TRAYS FOR ELECTRICAL SYSTEMS
260543 UNDERGROUND DUCTS AND RACEWAYS FOR ELECTRICAL SYSTEMS
260548 VIBRATION AND SEISMIC CONTROLS FOR ELECTRICAL SYSTEMS
260553 IDENTIFICATION FOR ELECTRICAL SYSTEMS
260574 OVERCURRENT PROTECTIVE DEVICE AND ARC-FLASH STUDY
260800 ELECTRICAL SYSTEMS COMMISSIONING
260923 DISTRIBUTED DIGITAL LIGHTING CONTROL SYSTEMS
262213 LOW-VOLTAGE DISTRIBUTION TRANSFORMERS
262413 SWITCHBOARDS
262416 PANELBOARDS
262713 ELECTRICITY METERING
262726 WIRING DEVICES
262726.10 WIRING DEVICE SCHEDULE
262813 FUSES
262816 ENCLOSED SWITCHES AND CIRCUIT BREAKERS
262913 ENCLOSED CONTROLLERS
264113 LIGHTNING PROTECTION FOR STRUCTURES
264313 SURGE PROTECTION FOR LOW-VOLTAGE ELECTRICAL POWER CIRCUITS
265100 INTERIOR LIGHTING
265619 LED EXTERIOR LIGHTING

DIVISION 27 - COMMUNICATIONS

271100	**TELECOMMUNICATIONS PATHWAYS AND SPACES**
271300	**TELECOM BACKBONE CABLING**
271500	**COMMUNICATIONS HORIZONTAL CABLING**
274100	**– GENERAL TECHNOLOGY SYSTEMS REQUIREMENTS**
274101	**– BASIC TECHNOLOGY SYSTEMS REQUIREMENTS**
274102	**– BASIC TECHNOLOGY SYSTEMS MATERIALS AND METHODS**
274113	**– AUDIO SYSTEMS**
274114	**– VIDEO SYSTEMS**
274115	**– CONTROL SYSTEMS**
275320	**PUBLIC SAFETY DISTRIBUTED ANTENNA SYSTEM TESTING**

DIVISION 28 - ELECTRONIC SAFETY AND SECURITY

281300	**ACCESS CONTROL**
282300	**VIDEO SURVEILLANCE**
283111	**DIGITAL, ADDRESSABLE FIRE-ALARM SYSTEM**

DIVISION 32 - EXTERIOR IMPROVEMENTS

323113	**CHAIN LINK FENCES AND GATES**
323300	**SITE FURNISHINGS**
328400	**IRRIGATION SYSTEM**
329300	**LANDSCAPE WORK**

APPENDIX

APWA 311100 Site Clearing and Earthwork Spec
APWA 321216.13 Paving Spec
APWA 321613 Driveway

KAYSVILLE CITY REQUIREMENTS

City Earthwork Spec
City Fire Hydrant Valves Spec
City Meter and Fire Hydrant
City Road Restoration Spec
City Trenching Spec
City Water Main Spec
City Water Service Lateral spec
City Trench detail

GENERAL CONDITIONS

August 31, 2020

Table of Contents

ARTICLE 1. GENERAL PROVISIONS

1.1 Definitions *(see revision page 8)*

ARTICLE 2. DFCM

2.1 Information and Services Required of DFCM
- 2.1.1 DFCM's Representative
- 2.1.2 Specialists and Inspectors
- 2.1.3 Surveys and Legal Description
- 2.1.4 Prompt Information and Services
- 2.1.5 Copies of Contract Documents

2.2 Construction By DFCM or By Separate Contractors
- 2.2.1 DFCM's Right To Perform Construction and to Award Separate Contracts
- 2.2.2 Coordination of the Work
- 2.2.3 Coordination of Schedules
- 2.2.4 Reporting Problems to DFCM
- 2.2.5 Contractor Remedial Work

ARTICLE 3. A/E

3.1 A/E's Administration of the Contract
- 3.1.1 In General
- 3.1.2 Site Visits
- 3.1.3 Communications Facilitating Contract Administration
- 3.1.4 A/E May Reject Work, Order Inspection, Tests
- 3.1.5 A/E Review Contractor's Submittals

3.2 Ownership and Use of A/E's Drawings, Specifications, and Other Documents

ARTICLE 4. CONTRACTOR

4.1 Review of Contract Documents and Field Conditions By Contractor
- 4.1.1 Reviewing Contract Documents, Information, Reporting Errors, Inconsistencies or Omissions
- 4.1.2 Review of Field Conditions
- 4.1.3 Subsurface Investigations
- 4.1.4 Perform in Accordance with Contract Documents and Submittals
- 4.1.5 Performance to Produce the Complete System and Intended Results
- 4.1.6 Intent and Hierarchy
- 4.1.7 Dividing Work and Contractor Representation
- 4.1.8 Planning and Priority

4.2 Supervision and Representatives
- 4.2.1 Supervision and Control
- 4.2.2 Persons Performing Work
- 4.2.3 Designated Representatives
- 4.2.4 Discipline and Competence
- 4.2.5 Responsibility
- 4.2.6 Not Relieved of Obligations
- 4.2.7 Inspections and Approvals

4.3 Payment by Contractor

4.4 Taxes and Other Payments to Government

4.5 Permits, Fees, Notices, Labor and Materials
- 4.5.1 Permits and Fees
- 4.5.2 Compliance, Notices
- 4.5.3 Correlation of Contract Documents and Laws
- 4.5.4 Failure to Give Notice

4.6 Time and Contractor's Construction Schedules
- 4.6.1 Progress and Completion
- 4.6.2 Schedule Preparation
- 4.6.3 Schedule Submittal
- 4.6.4 Schedule Content Requirements
- 4.6.5 Interim Completion Dates and Milestones
- 4.6.6 Float Time
- 4.6.7 Updates
- 4.6.8 Schedule of Submittals
- 4.6.9 Schedule Recovery
- 4.6.10 Schedule Changes and Modifications
- 4.6.11 Excusable Delay
- 4.6.12 Compensable Delay, Suspension or Interruption.
- 4.6.13 Time Extension Requests
- 4.6.14 Liquidated Damages

4.7 Documents and Samples at the Site, Certifying "As-Builts"

4.8 Shop Drawings, Product Data and Samples
- 4.8.1 Not Contract Documents
- 4.8.2 Promptness
- 4.8.3 Not Perform Until A/E Approves

4.8.4 Representations by Contractor
4.8.5 Contractor's Liability
4.8.6 Direct Specific Attention to Revisions
4.8.7 Informational Submittals
4.8.8 Professional Services
4.9 Use of Site
4.9.1 In General
4.9.2 Access to Neighboring Properties
4.10 Access to Work
4.11 Intellectual Property Licenses
4.12 Indemnification
4.12.1 Not Exclusive
4.12.2 Not Limited

ARTICLE 5. SUBCONTRACTORS

5.1 Award of Subcontracts and Other Contracts For Portions of the Work
5.1.1 Subcontracting Work Permitted; Conditions
5.1.2 Subsequent Changes
5.1.3 Business and Licensing Requirements
5.1.4 Bonding of Subcontractors
5.1.5 Subcontractor Default Insurance
5.2 Subcontractor Relations
5.2.1 Contractor Fully Responsible
5.2.2 Comply with Contact Documents
5.2.3 Rights
5.2.4 Sub-Subcontractors
5.2.5 Document Copies
5.3 Contingent Assignment of Subcontracts

ARTICLE 6. PROTECTION OF PERSONS AND PROPERTY

6.1 Safety of Persons and Property
6.1.1 Contractor Responsibility
6.1.2 Safety Program, Precautions
6.1.3 Compliance with Laws
6.1.4 Erect and Maintain Safeguards
6.1.5 Utmost Care
6.1.6 Prompt Remedy
6.1.7 Safety Designee
6.1.8 Load Safety
6.1.9 Off-Site Responsibility
6.1.10 Emergencies
6.2 Hazardous Materials
6.3 Historical and Archeological Considerations
6.4 Contractor Liability

ARTICLE 7. MODIFICATIONS, PRs & PCOs, PRE AND CLAIMS PROCESS

7.1 Modifications: In General
7.1.1 Types of Modifications and Limitations
7.1.2 By Whom Issued
7.1.3 Contractor to Proceed Unless Otherwise Stated
7.1.4 Adjusting Unit Prices
7.1.5 Concealed or Unknown Conditions
7.1.6 Increase in Contract Time
7.1.7 Allowances
7.2 Contractor Initiated Requests
7.2.1 The Request for Information, RFI, Process and Time to File
7.2.2 Proposed Change Order ("PCO")
7.2.3 Substitutions
7.3 Proposal Request Initiated by DFCM
7.3.1 If Agreement, Change Order Issued
7.3.2 If Disagreement
7.4 Change Orders
7.4.1 Adjusting Price Based Upon Agreement
7.4.2 DFCM Resolution of Price in the Absence of an Agreement Under Paragraph 7.4.1
7.4.3 Credits
7.4.4 Effect of a Change Order
7.5 Construction Change Directives
7.5.1 When Used and Contractor's Right to Challenge
7.5.2 Proceed with Work
7.5.3 Interim Payments by DFCM
7.6 ASI
7.7 Procedure for Preliminary Resolution Efforts
7.7.1 Request for Preliminary Resolution Effort (PRE)
7.7.2 Time for Filing
7.7.3 Content Requirement
7.7.4 Supplementation
7.7.5 Subcontractors
7.7.6 Information and Meetings
7.7.7 Contractor Required to Continue Performance
7.7.8 Decision
7.7.9 Decision Final Unless Claim Submitted
7.7.10 Extension Requires Mutual Agreement
7.7.11 If Decision Not Issued
7.7.12 Payment for Performance
7.8 Resolution of Claim
7.8.1 Claim
7.8.2 Subcontractors
7.8.3 Time for Filing
7.8.4 Content Requirement
7.8.5 Extension of Time to Submit Documentation
7.8.6 Contractor Required to Continue Performance
7.8.7 Agreement of Claimant on Method and Person(s) Evaluating the Claim
7.8.8 The Evaluation Process, Timeframes of Evaluator(s), Director's Determination, Administrative Appeal to the Executive Director and Judicial Review
7.8.9 Appeal Process Prerequisite for Further Consideration or Judicial Review

7.8.10 Payment of Claim
7.8.11 Allocation of Costs of Claim Resolution Process.
7.8.12 Alternative Procedures
7.8.13 Impact on Future Selections
7.8.14 DFCM's Right to Have Issues, Disputes or Claims Considered *(see revision page 41)*

ARTICLE 8. PAYMENTS AND COMPLETION

8.1 Schedule of Values
8.2 Applications for Payment
8.2.1 In General
8.2.2 Payment for Material and Equipment
8.2.3 Warranty of Title
8.2.4 Holdback by DFCM
8.3 Certificates for Payment
8.3.1 Issued by A/E
8.3.2 A/E's Representations
8.4 Decisions to Withhold Certification
8.4.1 When Withheld
8.4.2 Certification Issued When Reasons For Withholding Removed
8.4.3 Continue Work Even if Contractor Disputes A/E's Determination
8.4.4 DFCM Not in Breach
8.5 Progress Payments
8.5.1 In General, Interest on Late Payments
8.5.2 Contractor and Subcontractor Responsibility
8.5.3 Information Furnished by A/E or DFCM to Subcontractor
8.5.4 DFCM and A/E Not Liable
8.5.5 Certificate, Payment or Use Not Acceptance of Improper Work
8.6 Payment Upon Substantial Completion
8.7 Partial Occupancy or Use
8.7.1 In General
8.7.2 Inspection
8.7.3 Not Constitute Acceptance
8.7.4 Insurance
8.8 Final Payment
8.8.1 Certificate for Payment
8.8.2 Conditions for Final Payment
8.8.3 Waiver of Claims: Final Payment
8.8.4 Delays Not Contractor's Fault
8.8.5 Waiver by Accepting Final Payment

ARTICLE 9. TESTS AND INSPECTIONS, SUBSTANTIAL AND FINAL COMPLETION, UNCOVERING, CORRECTION OF WORK AND GUARANTY PERIOD

9.1 Tests and Inspections
9.1.1 In General
9.1.2 Failure of an Inspector to Appear
9.1.3 Nonconforming Work
9.1.4 Certificates
9.1.5 A/E Observing
9.1.6 Promptness
9.2 Uncovering of Work
9.2.1 Uncover Uninspected Work
9.2.2 Observation Prior to Covering
9.2.3 When an Inspector Fails to Appear or A/E or DFCM Did Not Make Prior Request
9.3 Inspections: Substantial and Final
9.3.1 Substantial Completion Inspection
9.3.2 Final Completion Inspection
9.3.3 Punchlist Completion
9.4 Correction of Work and Guaranty Period
9.4.1 Contractor Correct the Work
9.4.2 Guaranty and Correction After Substantial Completion
9.4.3 Removal of Work
9.4.4 Not Limit Other Obligations
9.5 Additional Warranties
9.5.1 In General
9.5.2 Exclusion
9.5.3 Furnish Evidence on Request
9.6 Acceptance of Nonconforming Work

ARTICLE 10. INSURANCE AND BONDS

10.1 Contractor's Liability Insurance
10.1.1 In General
10.1.2 Coverage
10.1.3 Endorsements
10.1.4 Terms
10.1.5 Failure to Provide
10.1.6 Certificates
10.1.7 No Limitation
10.2 "Builder's Risk" Insurance
10.2.1 In General
10.2.2 Deductible
10.2.3 Waiver of Subrogation
10.2.4 Special Hazards
10.2.5 Non-Eligible Projects
10.3 Performance Bond and Payment Bond

ARTICLE 11. MISCELLANEOUS PROVISIONS

11.1 A/E's Responsibilities
11.2 Successors and Assigns
11.3 Written Notice
11.3.1 Personal Delivery and Registered or Certified Mail
11.3.2 E-mail
11.4 Rights and Remedies
11.4.1 Not Limit
11.4.2 No Waiver
11.5 No Discrimination, No Sexual Harassment
11.6 Applicable Laws and Enforcement
11.7 Interpretation
11.8 Venue
11.9 Severability
11.10 Construction of Words
11.11 No Third-Party Rights

ARTICLE 12. TERMINATION OR SUSPENSION OF THE CONTRACT

12.1 Termination by Contractor for Cause
12.1.1 In General
12.1.2 Notice
12.2 Termination by DFCM for Cause
12.2.1 In General
12.2.2 DFCM's Right to Carry Out the Work Upon Termination for Cause
12.2.3 Items Required to Be Transferred or Delivered
12.2.4 Payment
12.2.5 DFCM Protection if Lienable
12.2.6 Credits and Deficits
12.2.7 If Contractor Found Not in Default or Excusable
12.2.8 Rights and Remedies Not Exclusive
12.2.9 Time Period for Claims
12.3 Termination for Convenience of DFCM
12.3.1 In General
12.3.2 Contractor Obligations
12.3.3 Termination Claim
12.3.4 Agreed Upon Payment
12.3.5 Payment Not Agreed Upon
12.3.6 Deductions
12.3.7 Partial Termination
12.3.8 Partial Payments
12.3.9 Preserve and Make Available Records
12.3.10 Suspension, Delay or Interruption of Work by DFCM for Convenience
12.4 DFCM's Right to Stop the Work

GENERAL CONDITIONS

August 31, 2020

THESE GENERAL CONDITIONS ("General Conditions") are part of and subject to the Contractor's Agreement (defined below) between DFCM (defined below) and Contractor (defined below).

ARTICLE 1. GENERAL PROVISIONS.

1.1 DEFINITIONS.

ARCHITECT/ENGINEER OR A/E. "Architect / Engineer" or "A/E" means the person or entity practicing as a design professional, including architect, engineer, interior designer, and/or landscape architect, retained under separate agreement with DFCM to act on behalf of DFCM according to the Contract Documents (defined below) and the A/E's employees, representatives and consultants. For Work (defined below) where there is no A/E hired by DFCM, references in these General Conditions to A/E shall be deemed to refer to DFCM's Representative.

ADDENDA. "Addenda" means the written or graphic instruments issued prior to the execution of the Contractor's Agreement (defined below) that clarify, correct, or change the bidding documents or the Contract Documents.

A/E's SUPPLEMENTAL INSTRUCTION OR ASI. "A/E's Supplemental Instruction" or "ASI" means a supplemental instruction issued by the A/E to Contractor that results in a clarification, correction, or minor change in the Work and does not affect the Contract Time (defined below) or the Contract Price (defined below).

AMENDMENT. "Amendment" means any document or communication that changes (or purports to change) the terms of Contractor's Agreement and/or the General Conditions, except as to: (1) scope of the Work; (2) Contract Price; and/or (3) Contract Time. With the exception of Supplemental General Conditions (defined below), no Amendment shall be valid and/or binding on DFCM unless: (1) the Amendment is set forth in a separate document, clearly titled "Amendment"; and (2) the Amendment is specifically and expressly accepted in writing by the Director (defined below).

BID. "Bid" means the offer or proposal of the bidder submitted on the prescribed form setting forth the prices for the Work to be performed.

BONDS. "Bonds" means collectively the bid bond, performance bond, payment bond, and any other instruments of security.

CHANGE ORDER. "Change Order" means a written instrument signed by both DFCM and Contractor, issued after the execution of the Contractor's Agreement on DFCM's form, authorizing: (1) a change in the Work; (2) an adjustment of the Contract Price; and/or (3) an adjustment of the Contract Time.

CLAIM. "Claim" means a dispute, demand, assertion or other matter submitted by Contractor, including a subcontractor at any tier, subject to the provisions of these General Conditions. The claimant may seek, as a matter of right, modification, adjustment or interpretation of Contract terms, payment of money, extension of time or other relief with respect to the terms of the Contract. A request for Preliminary Resolution Effort ("PRE") (defined below) shall not be considered a "Claim". A request for an amendment of the Contract Documents, requested Change Order or a Construction Change Directive ("CCD") (defined below) is not a PRE or Claim unless agreement cannot be reached, and the procedures of these General Conditions are followed.

CONSTRUCTION CHANGE DIRECTIVE. "Construction Change Directive" means a written order signed by DFCM, issued after execution of the Contractor's Agreement, directing Contractor to perform a change in the Work and stating a proposed basis for adjustment, if any, in the Contract Price and/or Contract Time.

CONTRACT DOCUMENTS. "Contract Documents" means collectively Contractor's Agreement, these General Conditions of Contractor's Agreement, applicable Supplemental General Conditions, Drawings (defined below), Specifications (defined below), Addenda, other documents listed in the Contractor's Agreement, authorized Amendments and Supplementary Conditions and Modifications (defined below) issued after execution of the Contractor's Agreement. The Contract Documents shall also include the bidding/proposal documents, including the Instructions to Bidders/Proposers, Notice to Contractors and the Bid/Proposal Form, to the extent not in conflict with the other above-stated Contract Documents and other documents and oral representations which are memorialized in writing and documented as an attachment to the Contractor's Agreement.

CONTRACT PRICE. "Contract Price" means the total amount payable by DFCM to Contractor for performance of the Work, including any authorized changes in the Work.

CONTRACT TIME. "Contract Time" means the time within which Contractor shall complete the Work, including any authorized changes in the Work

CONTRACTOR. "Contractor" means the person or entity identified as such in the Contractor's Agreement. As used in the Contract Documents, "Contractor" includes Contractor's employees, agents, representatives, subcontractors at any tier, and any other third party hired by Contractor to perform a portion of the Work and is referred to throughout the Contract Documents as if singular in number.

CONTRACTOR'S AGREEMENT. "Contractor's Agreement" means, unless the context requires otherwise, the agreement executed by the Contractor and DFCM for the Work.

DAY. "Day" or "days" means calendar day unless otherwise specifically defined.

DEFECTIVE. "Defective" is an adjective which when modifying the word "Work" refers to Work that does not conform to the Contract Documents, or does not meet the requirements of any inspection, referenced standard, code, test or approval referred to in the Contract Documents, or which fails to meet generally accepted craft standards, or which has been damaged.

DIRECTOR. "Director" means the Director of the Division of Facilities Construction and Management, unless the context requires otherwise. Director may include a designee selected by the Director for a particular function described in the Contract Documents.

DFCM. "DFCM" means the State of Utah, Division of Facilities Construction and Management. Unless the context requires otherwise, DFCM is the "Owner" as that term is commonly understood in the construction industry.

DRAWINGS. "Drawings" means the graphic and pictorial portions of the Contract Documents, wherever located and whenever issued, showing the design, location, and dimensions of the Work and generally includes drawings, elevations, sections, details, schedules, and diagrams, including electronic copies.

EXECUTIVE DIRECTOR. "Executive Director" means the Executive Director of the Utah Department of Administrative Services, including unless otherwise stated, the Executive Director's duly authorized designee.

FINAL COMPLETION. "Final Completion" means the date when all Work to be performed by Contractor has been completed and accepted in writing by DFCM.

INSPECTION. "Inspection" or its derivatives means a review of the Work, including but not limited to a visual review of the Work completed to date to ascertain if the Work is in accordance with the Contract Documents, including all applicable building codes and construction standards.

MODIFICATION. "Modification" means: (1) a Change Order; (2) a Construction Change Directive; or (3) an ASI. Contractor's Agreement may be amended or modified only by: (1) an authorized Amendment; or (2) a Modification.

NOTICE TO PROCEED. "Notice to Proceed" means a document prepared by DFCM that authorizes Contractor to commence Work. It shall be deemed issued upon being sent by DFCM to Contractor's address specified in Contractor's Bid.

PRELIMINARY RESOLUTION EFFORT OR PRE. "Preliminary Resolution Effort" or "PRE" means the processing of a request for preliminary resolution or any similar notice about an issue that could potentially lead to a Claim and is prior to reaching the status of a Claim.

PRODUCT DATA. "Product Data" means illustrations, standard schedules, performance charts, instructions, brochures, diagrams, and other information furnished by Contractor to illustrate materials or equipment for some portion of the Work.

PROPOSAL REQUEST OR PR. "Proposal Request" or "PR" means a request made by DFCM to Contractor requesting a proposal to resolve an issue as part of the Change Order process.

PROPOSED CHANGE ORDER OR PCO. "Proposed Change Order" or "PCO" means a request by Contractor submitted to the DFCM Representative to commence the Change Order process. It shall not be considered a "PRE" or a "Claim". The PCO may be related to any potential or actual delay, disruption, unforeseen condition or any other matter for which Contractor intends to seek an increase in the Contract Price and/or extension of the Contract Time.

REQUEST FOR INFORMATION OR RFI. "Request for Information" or "RFI" means a written request from Contractor to the A/E seeking information, direction, or clarification related to the Contract Documents, including Drawings and/or Specifications.

RULE. "Rule", unless the context requires otherwise, means a rule of the Utah Administrative Code.

SALES TAX AND/OR USE TAX. "Sales Tax" and/or "Use Tax", unless the context requires otherwise, means the sales tax and/or use tax collected or to be collected by the Utah State Tax Commission and shall

include any sales and/or use tax that the Utah State Tax Commission collects on behalf of any special district, local government, or political subdivision.

SAMPLES. "Samples" mean physical examples that illustrate materials, equipment or workmanship and establish standards by which the Work shall be judged.

SHOP DRAWINGS. "Shop Drawings" means drawings, diagrams, schedules and other data specially prepared for the Work by Contractor, or a subcontractor at any tier, manufacturer, supplier or distributor to illustrate some portion of the Work.

SPECIFICATIONS. "Specifications" means that portion of the Contract Documents consisting of the written requirements for materials, equipment, construction systems, standards, installation and workmanship for the Work and performance of related systems and services.

SUBCONTRACTOR. "Subcontractor" means any person or entity under contract with Contractor to provide services or labor for the Work. "Subcontractor" includes a trade contractor or specialty contractor. "Subcontractor" does not include suppliers who provide only materials, equipment or supplies to Contractor or a Subcontractor. The term "Subcontractor" is referred to throughout the Contract Documents as if singular in number and means a Subcontractor or authorized representative of the Subcontractor. The term "Sub-subcontractor" means a person or entity that has a contract with a Subcontractor to provide services or labor for the Work and also includes all lower tier sub-subcontractors. The terms "Subcontractor" and "Sub-subcontractor" do not include a separate contractor retained by DFCM or subcontractors or sub-subcontractors of a separate contractor retained by DFCM.

SUBSTANTIAL COMPLETION. "Substantial Completion" and its derivatives means the date certified in accordance with *Section 9.3** when the Work, or a designated portion thereof, is sufficiently complete, and any lack of completion or performance does not materially interfere with DFCM's intended use of the Work, in accordance with the Contract Documents, so that DFCM can occupy and use the Work for its intended use. DFCM's "intended use" or "occupy" as used in this definition, shall include any intended use or occupation by any agency or entity that DFCM intends to use or occupy the Work.
**Revised numbering from 'Section 9.2' to 'Section 9.3' as of 07122023.*

SUPPLEMENTAL GENERAL CONDITIONS. "Supplemental General Conditions" means the Supplemental General Conditions identified on DFCM's website, dfcm.utah.gov, applicable to the Work, if any, that supplements these General Conditions. Supplemental General Conditions are authorized Amendments.

SUPPLEMENTARY CONDITIONS. "Supplementary Conditions" means the part of the Contract Documents, if any, that amends or supplements these General Conditions and/or applicable Supplemental General Conditions. Supplementary Conditions, if authorized, are an Amendment.

WORK. "Work" means the construction, services, supervision, labor, tools, equipment, materials, products and transportation, to be furnished by Contractor, so as to fulfill the Contractor's obligations as required by the Contract Documents.

ARTICLE 2. DFCM.

2.1 INFORMATION AND SERVICES REQUIRED OF DFCM.

2.1.1 DFCM'S REPRESENTATIVE. DFCM shall designate a representative authorized to act on behalf of DFCM with respect to the Work ("DFCM's Representative"). Unless the context requires otherwise, "DFCM's Representative" is the "Owner's representative" as that term is commonly understood in the construction industry. DFCM's Representative shall have authority to review and approve the Work, including

the time schedule for completion, and the authority (but not a duty) to stop the Work for any reason, including, without limitation, unsafe conditions, or to direct Contractor to remedy, repair, or replace any Work, if necessary, to ensure its proper execution. DFCM and DFCM's Representative shall endeavor to render decisions pertaining to documents submitted by the A/E and/or Contractor to avoid a delay in the orderly and sequential progress of the Work. Contractor shall be responsible for time lost and the cost of correcting Work that in DFCM's judgment was executed improperly. DFCM shall be the final interpreter of the Contract Documents; the decision of DFCM in the absence of arbitrary or capricious conduct shall be conclusive. Notwithstanding anything to the contrary in the Contract Documents, DFCM's approval shall not relieve Contractor of Contractor's sole responsibility for the Work.

2.1.2 SPECIALISTS AND INSPECTORS. DFCM shall provide building inspection services in accordance with the applicable building codes, including routine and special inspections unless otherwise noted in the Contract Documents. DFCM may assign an inspector or specialist to note deviations from, or necessary adjustments to, the Contract Documents or to report deficiencies or defects in the Work. The inspector's or specialist's activities in no way relieve Contractor from the responsibilities set forth in the Contract Documents.

2.1.3 SURVEYS AND LEGAL DESCRIPTION. Except to the extent not applicable to the type of Work to be performed pursuant to Contractor's Agreement, DFCM shall furnish surveys describing physical characteristics, legal limitations and utility locations for the Work site, and a legal description of the Work site. The Contractor shall be entitled to rely on the accuracy of such survey information furnished by DFCM but shall exercise proper precautions relating to the safe performance of the Work. The Contractor recognizes that the exact location of underground or hidden utilities, plumbing and electrical runs may be somewhat different from the location indicated on such surveys furnished by DFCM or in the Contract Documents. The Contractor shall exercise reasonable skill and care to locate underground or hidden utilities, plumbing and electrical runs that are to remain to prevent damage thereto. The Contractor shall review the survey information provided by DFCM and shall promptly provide written notice to DFCM of any survey information that Contractor knows or discovers to be inaccurate.

2.1.4 PROMPT INFORMATION AND SERVICES. Upon receipt of a written request from Contractor, DFCM shall endeavor to furnish information or services under DFCM's control with reasonable promptness to avoid delay in the orderly progress of the Work.

2.1.5 COPIES OF CONTRACT DOCUMENTS. Unless otherwise provided in the Contract Documents, DFCM shall provide or make available to Contractor, free of charge, paper or electronic copies of Contract Documents, as determined by DFCM, as are reasonably necessary for execution of the Work. DFCM's website may also provide Contract Documents for the Work.

2.2 CONSTRUCTION BY DFCM OR BY SEPARATE CONTRACTORS.

2.2.1 DFCM'S RIGHT TO PERFORM CONSTRUCTION AND TO AWARD SEPARATE CONTRACTS. DFCM reserves the right to enter into contracts with third parties in connection with the Work and to perform construction or other activities itself on or about the Work site.

2.2.2 COORDINATION OF WORK. Contractor shall afford DFCM and the separate contractors or subcontractors retained by DFCM adequate opportunity for the introduction and storage of their materials and equipment and the execution of their work. Contractor shall properly connect and coordinate the Work with the work of DFCM and separate contractors or subcontractors.

2.2.3 COORDINATION OF SCHEDULES. Contractor shall cooperate with DFCM and any separate contractors and subcontractors hired by DFCM in performing the Work so that all portions of the Work may be completed in the shortest possible time within normal working hours. Contractor shall furnish separate contractors and subcontractors full information regarding time schedules for Contractor's Work. Contractor

shall coordinate the Work with the workers who may be retained by DFCM, all separate contractors and subcontractors, and their activities in the vicinity of the Work site.

2.2.4 REPORTING PROBLEMS TO DFCM. If part of Contractor's Work depends on work by DFCM or a separate contractor, Contractor shall, prior to proceeding with that portion of the Work, promptly report in writing to DFCM any apparent defects in workmanship of the work of DFCM and/or such separate contractor that would render it unsuitable for proper execution of the Work. Failure of Contractor to report defects shall constitute an acknowledgment that DFCM's or the separate contractor's completed or partially completed work is fit and proper to receive Contractor's Work, except as to defects in workmanship not then reasonably discoverable.

2.2.5 CONTRACTOR REMEDIAL WORK. If Contractor causes damage to the work of DFCM or any separate contractors or subcontractors, Contractor shall promptly remedy such damage and shall use all reasonable efforts to promptly negotiate a settlement with DFCM and such separate contractors and subcontractors.

ARTICLE 3. A/E.

3.1 A/E'S ADMINISTRATION OF THE CONTRACT.

3.1.1 IN GENERAL. The A/E shall assist DFCM in administering the Contract in accordance with the Contract Documents. The A/E shall have authority to act on behalf of DFCM, but only to the extent provided in the Contract Documents and/or A/E's agreement with DFCM.

3.1.2 SITE VISITS.

3.1.2.1 Site visits or inspections by the A/E or DFCM shall in no way limit or affect Contractor's responsibility to comply with all the requirements and the overall design concept of the Contract Documents as well as all federal, state, and local laws, rules, regulations, ordinances and orders of public authorities applicable to the Work.

3.1.2.2 The A/E shall promptly submit to DFCM a written report subsequent to each site visit detailing the visit.

3.1.3 COMMUNICATIONS FACILITATING CONTRACT ADMINISTRATION. Except as authorized by DFCM or as otherwise provided in the Contract Documents, including these General Conditions, the A/E and Contractor shall communicate through DFCM on issues regarding the timing of the Work, cost of the Work, and scope of the Work. Communications by and with the A/E's consultants shall be through the A/E. Communications by and with Subcontractors shall ordinarily be through Contractor. Communications by and with separate contractors shall be through DFCM.

3.1.4 A/E MAY REJECT WORK, ORDER INSPECTIONS, TESTS. The A/E shall have the authority to reject Work which, based upon the A/E's knowledge or what may be reasonably inferred from the A/E's site observations and review of data, does not conform to the Contract Documents. Whenever the A/E considers it necessary or advisable for implementation of the intent of the Contract Documents, the A/E shall have the authority to require additional inspections or testing of the Work in accordance with the provisions of the Contract Documents, whether or not such Work is fabricated, installed, or completed; however, the A/E must obtain DFCM's prior written approval of any such additional inspections or testing. Neither this authority of the A/E nor a decision made in good faith either to exercise or not to exercise such authority shall give rise to a duty or responsibility of the A/E to Contractor, Subcontractors, their agents or employees or other persons performing portions of the Work, including separate contractors. If Contractor disputes the rejection of any

Work and the correction thereof shall involve additional cost or time, it shall be DFCM's option to accept such Work whether it shall be conforming or nonconforming.

3.1.5 A/E REVIEW OF CONTRACTOR'S SUBMITTALS.

3.1.5.1 Contractor shall submit Shop Drawings, Product Data, and Samples and other submittals required by the Contract Documents to the A/E as required by the approved submittal schedule.

3.1.5.2 The A/E shall review and take appropriate action upon Contractor's submittals such as Shop Drawings, Product Data, and Samples, but only for the purpose of checking for conformance with the information and design concepts expressed in the Contract Documents. A/E action taken on a submittal shall not constitute a Modification.

3.1.5.3 The A/E's action shall be taken no later than fourteen (14) days following A/E's receipt of the submittal, unless agreed to otherwise by Contractor and DFCM, in order to avoid a delay in the Work of Contractor or of separate contractors while allowing sufficient time in the A/E's professional judgment to permit adequate review.

3.1.5.4 Review of such submittals shall not be conducted for the purpose of determining the accuracy and completeness of other details such as dimensions and quantities or for substantiating instructions for installation or performance of equipment or systems, all of which remain the responsibility of Contractor as required by the Contract Documents.

3.1.5.5 The A/E's review of Contractor's submittals shall not relieve Contractor of Contractor's obligations under the Contract Documents.

3.1.5.6 The A/E's review shall not constitute approval of safety precautions or, unless otherwise specifically stated by the A/E, of any construction means, methods, techniques, sequences, or procedures.

3.1.5.7 The A/E's approval of a specific item shall not indicate approval of an assembly of which the item is a component.

3.1.5.8 When professional certification of performance characteristics of materials, systems, or equipment is the responsibility of the Contractor under the Contract Documents, the A/E shall be entitled to rely upon such certifications to establish that the materials, systems or equipment shall meet the performance criteria required by the Contract Documents.

3.2 OWNERSHIP AND USE OF A/E'S DRAWINGS, SPECIFICATIONS AND OTHER DOCUMENTS. All Drawings, Specifications, and other documents prepared by the A/E for the Work are and shall remain the property of DFCM, and DFCM shall retain all common law, statutory, and other reserved rights with respect thereto. Said documents are intended for use as an integrated set for the Work. Neither Contractor nor A/E shall modify or use Contract Documents on any other project without the prior written consent of DFCM. Any such non-permissive use or modification by Contractor, Contractor's Subcontractors at any tier, or anyone else for whose acts Contractor is liable, shall be at Contractor's sole risk. To the fullest extent permitted by law, Contractor shall release, indemnify, hold harmless, and defend DFCM, and require all Subcontractors to release, indemnify, hold harmless, and defend DFCM, from and against any and all liabilities, claims, demands, actions, damages, losses, and expenses, including but not limited to attorney fees and costs of litigation, arising out of such non-permissive use or modification by Contractor or its Subcontractors. Contractor, including its Subcontractors, are granted a limited license to use and reproduce applicable portions of the Drawings, Specifications, and other documents prepared by the A/E appropriate to and for use in the execution of the Work. Contractor shall preserve the copyright notice, if any, shown on the Drawings, Specifications and other documents prepared by the A/E for the Work, on all copies. Submittals or distributions

necessary to meet official regulatory requirements or for other purposes relating to the Work shall not be construed as a publication in derogation of DFCM's copyright or other reserved rights.

ARTICLE 4. CONTRACTOR.

4.1 REVIEW OF CONTRACT DOCUMENTS AND FIELD CONDITIONS BY CONTRACTOR.

4.1.1 REVIEW OF DOCUMENTS. Contractor shall carefully study and compare the Contract Documents with each other and with information furnished by DFCM and shall at once report to DFCM and A/E all errors, omissions, inconsistencies and/or ambiguities discovered. Contractor shall not be liable to DFCM or A/E for damage resulting from errors, omissions, inconsistencies and/or ambiguities in the Contract Documents unless Contractor recognized such error, omission, inconsistency and/or ambiguity or a contractor of ordinary skill and expertise for the type of Work involved would have readily so recognized such error, omission, inconsistency and/or ambiguity, and Contractor failed to report such to DFCM and A/E. If Contractor performs any Work without such notice to DFCM and A/E and prior to resolution of the error, omission, inconsistency and/or ambiguity, Contractor shall be responsible for such performance and shall bear the costs for correction.

4.1.2 REVIEW OF FIELD CONDITIONS. Contractor shall take field measurements, verify field conditions and carefully compare such field measurements and conditions and other information known to Contractor, or information that a contractor of ordinary skill and expertise for the type of Work involved would have known, before commencing Work. Contractor shall immediately report to DFCM and A/E all errors, omissions, inconsistencies and/or ambiguities discovered. If Contractor performs any Work without such notice to DFCM and A/E and prior to resolution of the error, omission, inconsistency and/or ambiguity, Contractor shall be responsible for such performance and shall bear the costs for correction.

4.1.3 SUBSURFACE INVESTIGATIONS. If DFCM has provided the Contractor with reports of subsurface investigations and/or tests of soils at the Work site ("Geotechnical Report") as part of the Contract Documents, the Contractor may rely upon the accuracy of the technical data contained in such Geotechnical Report at the locations where the data was obtained and to the depth indicated. However, Contractor acknowledges that the conditions indicated in any Geotechnical Report of any subsurface investigations and/or tests of soils at the Work site may not be representative of conditions existing at locations and/or at depths other than where data was obtained or that conditions different than those indicated by such Geotechnical Report may exist at the Work site. Contractor shall not be entitled to any increase in the Contract Price and/or increase in the Contract Time based on any data, opinion and/or recommendation in any Geotechnical Report and/or any inaccuracy, incompleteness, mistake and/or error in any Geotechnical Report except to the extent that Contractor is entitled to an increase in the Contract Price and/or extension of the Contract Time for a concealed or unknown condition as provided in Section 7.1.5.

4.1.4 PERFORM IN ACCORDANCE WITH CONTRACT DOCUMENTS AND SUBMITTALS. Contractor shall perform the Work in accordance with the Contract Documents and submittals to which no exception has been taken in accordance with the Contract Documents.

4.1.5 PERFORMANCE TO PRODUCE THE COMPLETE SYSTEM AND INTENDED RESULTS. The Contract Documents shall be read as a whole and wherever possible, the provisions shall be construed in order that all provisions are operable. The intent of the Contract Documents is to include all items necessary for the proper execution and completion of the Work by Contractor, whether or not specifically set forth in the Contract Documents, for the Contract Price and within the Contract Time. Performance by Contractor shall be required to the extent consistent with and reasonably inferable from the Contract Documents as being necessary to allow the Work to function for its intended use.

4.1.6 INTENT AND HIERARCHY. The Contract Documents are complimentary, and what is required by one Contract Document or provisions thereof, shall be as binding as if required by all the Contract

Documents or provisions thereof. In case of an irreconcilable conflict between provisions within a Contract Document or between Contract Documents, the following priorities shall govern as listed below:

4.1.6.1 A Modification or authorized Amendment (including authorized Supplementary Conditions) shall govern over all Contract Documents listed in Sections 4.1.6.2 – 4.1.6.6 or previous Modifications or authorized Amendments (including authorized Supplementary Conditions).

4.1.6.2 The Contractor's Agreement shall govern over all Contract Documents listed in Sections 4.1.6.3 - 4.1.6.6**.**

4.1.6.3 Supplemental General Conditions shall govern over all Contract Documents listed in Sections 4.1.6.4 – 4.6.1.6.

4.1.6.4 These General Conditions shall govern over the Contract Documents listed in Sections 4.1.6.5 – 4.1.6.6.

4.1.6.5 The Drawings and Specifications shall govern over the Contract Documents listed in Section 4.1.6.6.

4.1.6.6 Attachments to the Contractor's Agreement, Contractor's management plan, bidding/proposal documents, including the Instructions to Bidders/Proposers, Notice to Contractors and the Bid/Proposal Form and/or documented interview information, if any, are Contract Documents, binding on Contractor, but are subordinate to the Contract Documents listed in Sections 4.1.6.1 – 4.1.6.5.

4.1.6.7 An Addendum shall govern over all other Contract Documents and any previously issued Addendum.

4.1.6.8 In case of a conflict or ambiguity within the same level of hierarchy of described documents, DFCM reserves the right to revise the documents to select the most stringent requirement unless the preponderance of the Contract Documents indicate a less stringent requirement.

4.1.7 DIVIDING WORK AND CONTRACTOR REPRESENTATION. Organization of the Specifications into divisions, sections and articles, and arrangement of Drawings, shall not control Contractor in dividing the Work among Subcontractors or in establishing the extent of Work to be performed by any trade. Contractor shall ensure that the Subcontractors at any tier, manufacturers and suppliers engaged or to be engaged by Contractor, are and shall be familiar with the requirements for performance by them of their obligations.

4.1.8 PLANNING AND PRIORITY. Contractor shall plan and schedule the Work and shall maintain the schedule to Substantially Complete the Work within the Contract Time.

4.2 SUPERVISION AND REPRESENTATIVES.

4.2.1 SUPERVISION AND CONTROL. Contractor shall supervise and direct the Work using Contractor's best skill and attention to complete the Work within the Contract Time. Contractor shall be solely responsible for and have control over the construction means, methods, techniques, sequences, and procedures and for coordinating all portions of the Work, except to the extent that the Contract Documents specifically and expressly state otherwise.

4.2.2 PERSONS PERFORMING WORK. Contractor shall perform the Work using qualified employees, consultants, and Subcontractors selected and paid for by Contractor, adequately trained in the requirements of their particular jobs, and skilled in the Work assigned to them. Contractor shall use all

reasonable efforts to maintain a stable project team and minimize changes in key members of the team where loss of key members could have an adverse impact on the Contract Time. Any change in key personnel assigned to the Work must be approved by DFCM in writing.

4.2.3 DESIGNATED REPRESENTATIVES. Contractor shall employ a competent superintendent and necessary assistants, fluent in spoken and written English, who shall be at the Work site during performance of the Work. Contractor's superintendent shall maintain communication between DFCM, the A/E, and Contractor and be responsible for the management of Contractor's activities and deliverables described in the Contract Documents, as well as management of any third-party resources hired by Contractor to provide services or products under the Contract Documents. Contractor's superintendent shall represent Contractor, and communications given to the superintendent shall be as binding as if given to Contractor. Important communications shall be confirmed in writing. Other communications shall be similarly confirmed in writing on written request in each case.

4.2.4 DISCIPLINE AND COMPETENCE. Contractor shall enforce safety procedures, strict discipline, and good order among Contractor's employees, Contractor's Subcontractors, agents, representatives and other persons performing the Work under the Contract Documents. If DFCM reasonably determines that a particular person does not follow safety procedures, is unfit or unskilled for the assigned Work, disregards instructions, ignores the environmental restraints of the Work, or jeopardizes the goodwill between DFCM and the public, Contractor shall immediately replace the person upon receipt of DFCM's request to do so and shall not employ the person again on the Work.

4.2.5 RESPONSIBILITY. Contractor shall be responsible to the State of Utah and DFCM for the acts and omissions of Contractor's employees, Subcontractors and their agents and employees and other persons performing portions of the Work under a contract with Contractor or on behalf of Contractor.

4.2.6 NOT RELIEVED OF OBLIGATIONS. Contractor shall not be relieved of obligations to perform the Work in accordance with the Contract Documents either by activities or duties of DFCM or DFCM's agents in DFCM's administration of the Contractor's Agreement, or by tests, inspections, or approvals required or performed by persons other than Contractor or for those that Contractor is liable.

4.2.7 INSPECTIONS AND APPROVALS.

4.2.7.1 All Work performed by Contractor shall be subject to the inspection and approval of DFCM to determine whether the Work is in accordance with the Contract Documents. Contractor shall permit and facilitate inspection of the Work at all times by DFCM, DFCM's representatives and governmental authorities having jurisdiction.

4.2.7.2 Contractor shall be responsible for requesting inspections for various stages and portions of the Work required under the Contract Documents in a timely manner in accordance with the process and document requirements of the applicable inspection authority. In the event Work is not in a condition to be inspected at the time scheduled for the inspection of such Work for causes for which the Contractor is responsible, Contractor shall bear all associated costs and expenses without reimbursement by DFCM.

4.2.7.3 If any of the Work is required to be inspected or approved by the terms of the Contract Documents, Contractor shall timely request such inspection or approval to be performed in accordance with Article 9. Except as provided in Article 9, Work shall not proceed without any required inspection and the associated authorization to proceed. Contractor shall promptly notify DFCM if the inspector fails to appear at the site.

4.2.7.4 Contractor shall work with the inspector to maintain an Open Issues Log and Contractor shall proceed diligently to resolve all open issues.

4.3 PAYMENT BY CONTRACTOR. Except to the extent it is otherwise stated in the Contract Documents, Contractor shall provide and pay for all supervision, labor, tools, equipment, materials and transportation, including, without limitation: construction equipment and machinery; water; heat; utilities; and other facilities, supplies, consumables and services necessary for the proper execution and completion of the Work, whether temporary or permanent and whether or not incorporated or to be incorporated in the Work.

4.4 TAXES AND OTHER PAYMENTS TO GOVERNMENT. Contractor shall pay Sales Tax and/or Use Tax, consumer, employment-related and similar taxes related to the Work or portions thereof provided by Contractor which are legally enacted when bids are received or negotiations concluded, whether or not yet effective or merely scheduled to go into effect. Contractor shall comply with the laws and regulations regarding the payment of Sales Tax and/or Use Tax and any exemptions. The procurement documents may have a provision regarding specific items which are exempt from State of Utah Sales Tax and/or Use Tax. Any such exemption shall be used only for the items and the project specified in the procurement documents. Any such exemption does not apply to taxes levied by the federal government or any taxing entity outside of the State of Utah. If Contractor properly relies upon a provision(s) of the bidding or proposal documents indicating exemption from State of Utah Sales Tax and/or Use Tax, and if State of Utah Sales Tax and/or Use Tax subsequently becomes due, then Contractor shall be paid such tax amount not included in the bid/proposal amount due to the reliance upon such provision.

4.5 PERMITS, FEES, NOTICES, LABOR AND MATERIALS.

4.5.1 PERMITS AND FEES. Unless otherwise required in the Contract Documents, it shall not be necessary for Contractor to obtain or pay for local building permits, plan check fees, electrical permits, plumbing permits, connection fees, or impact fees, nor shall it be necessary to pay fees for inspections pertaining thereto.

4.5.2 COMPLIANCE, NOTICES. Contractor shall comply with and give notices required by all federal, state, and local laws, rules, regulations, ordinances, and orders of public authorities applicable to the Work.

4.5.3 CORRELATION OF CONTRACT DOCUMENTS AND LAW. It is not Contractor's responsibility to ascertain that the Contract Documents are in accordance with applicable federal, state and/or local laws, rules, regulations, ordinances, and/or orders of public authorities having jurisdiction. However, if Contractor observes, or if such would be readily observable to a contractor of ordinary skill and expertise for the type of Work involved, that a portion of the Contract Documents is at variance therewith, Contractor shall promptly notify the A/E and DFCM in writing, and necessary changes shall be accomplished by appropriate Modification and/or Amendment.

4.5.4 FAILURE TO GIVE NOTICE. If Contractor, or any Subcontractor, performs Work without complying with the requirements of this Section 4.5, Contractor shall assume responsibility for such Work and shall bear the appropriate amount of the applicable costs of correction.

4.6 TIME AND CONTRACTOR'S CONSTRUCTION SCHEDULES.

4.6.1 PROGRESS AND COMPLETION.

4.6.1.1 Time is of the essence in this Contract. By executing the Contractor's Agreement, Contractor confirms that the Contract Time is adequate to perform the Work. The Contractor shall proceed expeditiously with adequate forces to achieve Substantial Completion within the Contract Time.

4.6.1.2 Contractor shall commence and complete the Work within the Contract Time and pursuant to the schedule, an initial version of which shall be prepared and provided by Contractor to DFCM and the A/E for approval, as it may be modified with DFCM's consent. Unless and except to the extent that preliminary Work at the Work site is authorized in writing by DFCM, Contractor shall not prematurely commence the Work at the Work site or elsewhere until DFCM issues a Notice to Proceed or prior to the effective date of insurance required by Article 10 to be furnished by Contractor, whichever is later. Contractor shall proceed expeditiously with adequate forces to achieve Substantial Completion within the Contract Time. All other Work shall be completed no later than the date established for Final Completion. Contractor shall notify DFCM when Contractor considers the entire Work to be completed. DFCM shall be entitled to a final inspection to determine whether the Work has been completed in accordance with the Contract Documents. The date of Substantial Completion shall be established by a certificate of Substantial Completion issued by the A/E or a written acknowledgement of Substantial Completion signed by DFCM.

4.6.1.3 INITIAL CONTRACT TIME. Unless otherwise specified in the bidding documents, the initial Contract Time shall be the time identified in the Contractor's Agreement.

4.6.2 SCHEDULE PREPARATION.

4.6.2.1 Promptly after being awarded the Work, Contractor shall prepare and submit for DFCM's and the A/E's approval, a planned progress schedule for the Work. Contractor shall plan and schedule the Work to facilitate the Work and shall maintain a schedule to place proper priority to sequence the Work to complete the Work within the Contract Time. Contractor shall commence and complete the Work by the dates set forth in the agreed upon schedule and Contractor's Agreement.

4.6.2.2 The schedule shall include a time-line for procurement, fabrication, construction, and testing activities, including interdependence of items necessary to complete the Work, duration of activities, interim completion dates, milestones, closeout and commissioning, submittals, and critical path.

4.6.2.3 Contractor shall advise and consult with DFCM during progress of the Work and keep DFCM fully informed as to the status of the Work at intervals as required by DFCM. Contractor shall provide DFCM with a daily listing of personnel and equipment used on the Work. If the Work is not on schedule, Contractor shall immediately advise DFCM in writing of Contractor's proposed action to bring it on schedule.

4.6.2.4 DFCM may take reasonable exception to activity duration, activity placement, construction logic, and time frame for any element of the Work to be scheduled and may recommend revisions.

4.6.3 SCHEDULE SUBMITTAL.

4.6.3. Contractor shall develop the CPM schedule using Primavera, MS Project or Phoenix unless otherwise authorized by DFCM. The critical path shall be identified, including the critical paths for interim completion dates and milestones.

4.6.3.2 Contractor shall update the schedule at least once a month and submit the updated schedule with each Application for Payment.

4.6.3.3 No progress payments shall be approved until Contractor has submitted a detailed CPM schedule covering the first ninety (90) days of the Work with a general CPM schedule for the entire Work. The detailed schedule for the entire Work shall be completed prior to the second Application for Payment, unless otherwise authorized in writing by DFCM.

4.6.4 SCHEDULE CONTENT REQUIREMENTS.

4.6.4.1 The schedule shall indicate the duration of activities and order, sequence and interdependence of all items known to be necessary to complete the Work, including construction, procurement, fabrication and delivery of materials and equipment, commissioning, submittals and approvals of submittals or other documents. Work items of DFCM, other contractors, utilities, and other third parties that may affect or be affected by Contractor shall be included.

4.6.4.2 If DFCM is required by the Contract Documents to furnish any materials, equipment, or other items to be incorporated into the Work by Contractor, Contractor shall submit, with the first schedule submittal, a letter clearly indicating the dates that such items are required at the Work site.

4.6.4.3 The schedule shall indicate an early Substantial Completion date for the Work that is no later than the Work's required Substantial Completion date.

4.6.4.4 The schedule, including duration of all activities, shall be given in calendar days and indicate all of the following:

4.6.4.4.1 Interfaces with the Work of outside contractors (e.g., utilities, power, and any separate contractors retained by DFCM);

4.6.4.4.2 Description of activity including activity number/numbers;

4.6.4.4.3 Estimated duration time for each activity and remaining duration;

4.6.4.4.4 Early start, late start, early finish, late finish date, and predecessor/successors including stop-start relationships with lead and lag time for each activity – all activities shall have a predecessor and a successor, except for the start milestone and finish milestone;

4.6.4.4.5 Total Float and Free Float available to each path of activities;

4.6.4.4.6 Actual start date for each activity begun;

4.6.4.4.7 Actual finish date for each activity completed;

4.6.4.4.8 The percentage complete of each activity in progress or completed;

4.6.4.4.9 Identification of all critical path activities;

4.6.4.4.10 The critical path for the Work, with the path of activities being clearly and easily recognizable on the time-scaled network diagram. The path(s) with the least amount of float must be identified. Except as may otherwise be explicitly and specifically provided in the Contract Documents, no more than forty-percent (40%) of all activities may be identified as critical path items. The relationship between non-critical activities and activities on the critical path shall be clearly shown on the network diagram. Near critical path activities shall also be identified;

4.6.4.4.11 Unless otherwise authorized by DFCM, all activities on the schedule representing construction on the site may not have a duration longer than fourteen (14) days. Construction items that require more than fourteen (14) days to complete must be broken into identifiable activities on the schedule with durations less than fourteen (14) days. The sum of these activities represents the total length required to complete that construction item; and

4.6.4.4.12 Additional requirements, if any, as specified in the Supplemental General Conditions and/or authorized Supplementary Conditions.

4.6.5 INTERIM COMPLETION DATES AND MILESTONES. The schedule must include contractually specified interim completion dates and milestones (which completion milestones must have a "finish on or before" soft constraint added). The milestones and completion dates indicated are considered essential to the satisfactory performance of the Contractor's Agreement and to the coordination of all Work. The milestone dates listed are not intended to be a complete listing of all Work or of interfaces with other contractors.

4.6.6 FLOAT TIME. "Total Float" is defined as the amount of time that an activity can be delayed from its early without delaying Substantial Completion. "Free Float" is the amount of time that an activity can be delayed without delaying the early start date of any successor activity. Total Float time and Free Float time shall belong to the project and DFCM and Contractor have the right to use the Total Float time and/or Free Float Time for non-critical path activities until Contractor has reallocated such time on a newly submitted schedule.

4.6.7 UPDATES. Prior to any approval of an Application for Payment, DFCM, A/E, and Contractor shall review Contractor's schedule compared to the Work completed. The amount of Work completed shall be approved by DFCM as supported by the schedule of values and as verified by the determination of Work completed. If necessary, Contractor shall then update and submit to DFCM the schedule with the Application for Payment; all of which shall be in accordance with DFCM's approval. All updates shall be provided in electronic and hard copy formats. At each scheduled meeting with DFCM, Contractor shall provide a four week look ahead, with long lead items identified. If the Work is not on schedule, Contractor shall immediately advise DFCM in writing of Contractor's proposed action to bring it on schedule.

4.6.8 SCHEDULE OF SUBMITTALS. Contractor shall prepare and keep current, for the A/E's and DFCM's review and approval, a schedule of submittals required by the Contract Documents, which shall be coordinated with Contractor's construction schedule and allow the A/E a reasonable time to review the submittals. The submittal schedule shall be included as part of the construction schedule. Submittals requiring expedited review must be clearly identified as such in the schedule of submittals. Contractor shall coordinate and agree upon a submittal schedule with A/E. If a submittal does not pass a second review, then a meeting will be held to determine a path to proceed and expedite approval. Contractor shall notify A/E in writing if expedited review of a submittal is critical.

4.6.9 SCHEDULE RECOVERY. If the Work represented on the critical path falls behind more than seven (7) days, Contractor shall redo the schedule within seven (7) days, showing how the Contractor shall recover the time. Contractor's schedule must have an approved baseline schedule before the schedule may be updated. A narrative that addresses the changes in the schedule from the previously submitted schedule shall be submitted along with the updated schedule in electronic .pdf format and on the written request of DFCM in native electronic copy format of the scheduling software utilized by Contractor. Contractor shall comply with the most recent schedules.

4.6.10 SCHEDULE CHANGES.

4.6.10.1 The Contract Time may only be shortened or extended by a Change Order or Construction Change Directive.

4.6.10.2 Should Contractor, after approval of the complete detailed construction schedule, desire to change Contractor's plan of construction, Contractor shall submit its requested revisions to DFCM and the A/E, along with a written statement of the revisions including a description of the sequence and duration changes for rescheduling the Work, methods of maintaining adherence to intermediate milestones and the completion dates, and the reasons for the revisions. Requested changes to the approved baseline schedule shall include a narrative that addresses the requested changes. If the requested changes are acceptable to DFCM, which acceptance shall not be unreasonably withheld, they shall be incorporated into the schedule in the next reporting period by Contractor. If after Contractor submits a request for change in the schedule, DFCM does not agree with the request, DFCM shall schedule a meeting with Contractor to discuss the differences.

4.6.10.3 The critical path schedule, as the term is used in these General Conditions, shall be based on the current version of Contractor's schedule for the Work and accepted by DFCM just prior to the an asserted change in the Work, asserted delay, suspension, or interruption. If Contractor believes it is entitled to an extension of Contract Time under the Contract Documents, Contractor shall submit a PCO in accordance with Section 7.2 to the A/E and DFCM accompanied by an analysis ("Requested Time Adjustment Schedule") in accordance with the Contract Documents for time extensions. The "Requested Time Adjustment Schedule" shall include "fragnets" that represent the added or changed Work to the schedule. The impact on unchanged activities caused by the changes and/or delays being analyzed shall be included in these fragnets. A "fragnet" as used in these General Conditions and when used in the context of project scheduling is a subset of project activities that are inter-related by predecessor and successor relationships that are tied into the main schedule with identified start and completion points. Each fragnet may or may not be on the critical path. An entire schedule consists of a series of inter-related fragnets.

4.6.11 EXCUSABLE DELAY.

4.6.11.1 If Contractor is unreasonably delayed in the progress of the Work on the critical path schedule by an act or neglect of DFCM; or separate contractors retained by DFCM; or by a Force Majeure Delay (defined below) that DFCM reasonably determines may justify delay beyond the date for Substantial Completion, then the Contract Time shall be extended by Change Order for the period of time caused by such delay. The Contract Price shall not be increased, and the Contract Time shall not be extended for any delays that are concurrent with Contractor delays.

4.6.11.1.1 For purposes of the Contractor's Agreement, a Force Majeure Delay shall mean a delay to the commencement or the progress of the Work by reason of events or causes beyond the control of DFCM, the Contractor, and the Contractor's Subcontractors and Sub-subcontractors of any tier, or anyone directly or indirectly employed by them or anyone for whose acts they may be liable. Notwithstanding anything to the contrary set forth herein, Force Majeure Delays shall not include: (1) labor disputes confined to the Work site or relating solely to the Work that are due to a breach of a collective bargaining agreement by the Contractor or its Subcontractors or Sub-subcontractors of any tier, or anyone directly or indirectly employed by them or anyone for whose acts they may be liable; (2) adverse weather conditions, except as provided in Section 4.6.11.2; (3) a failure of the Contractor or its Subcontractors or Sub-subcontractors of any tier, or anyone directly or indirectly employed by them or anyone for whose acts they may be liable, to comply with any laws, codes or orders of governmental authorities with jurisdiction of the Work; or (4) any financial inability of the Contractor or its Subcontractors or Sub-subcontractors of any tier, or anyone directly or indirectly employed by them, to perform their obligations under the Contract Documents.

4.6.11.1.2 Delays which according to the schedule do not affect any critical path milestone dates or the completion dates shown on the schedule at the time of the delay shall not be the basis for a change in the Contract Time.

4.6.11.1.3 Contractor shall immediately take all steps reasonably possible to lessen the adverse impact of delay. Notwithstanding the foregoing, to the extent any of the causes for delay were caused by Contractor, reasonably foreseeable by Contractor, or avoidable by Contractor, then to such extent the delay shall not be cause for a change in the Contract Price and/or Contract Time. For purposes of this Section, "Contractor" shall include all Subcontractors and others under the responsibility of the Contractor.

4.6.11.1.4 The determination of the total amount of time extension, if any, shall be based upon the current schedule in effect at the inception of the change and/or delay and upon all data relevant to the extension as supported by appropriate substantiating relative data in the project record. Once approved, such data shall be incorporated in the next monthly update of the schedule by Contractor.

4.6.11.2 The Contract Price shall not be increased and the Contract Time shall not be extended for normal bad weather or any weather that is reasonably foreseeable at the time of entering into the Contractor's Agreement. The Contract Time as stated in the Contract Documents includes due allowance for days on which Work cannot be performed out of doors. Contractor acknowledges that Contractor may lose days due to weather conditions. The Contract Time may be extended at no cost to DFCM if all of the following are met, which must be established by Contractor:

4.6.11.2.1 That the weather prevented Work from occurring that is on the critical path for the Work based upon a critical path schedule previously submitted to DFCM and to the extent accepted by DFCM;

4.6.11.2.2 There are no concurrent delays for which Contractor is responsible;

4.6.11.2.3 Contractor took all reasonable steps to alleviate the impact of the weather and made reasonable attempts to prevent the delay and despite such reasonable actions of Contractor, the weather impacted the critical path as described above; and

4.6.11.2.4 In connection with the weather event for which delay is claimed by Contractor, the weather was either exceptionally adverse, such as a tornado, severe wind storm, or severe hail storm, or one of the following occurred:

4.6.11.2.4.1 for any day between November 1 and March 31 for which delay is claimed by Contractor, the recorded minimum temperature at the Work site, as verifiably documented by Contractor, fell below the mean minimum temperature for the station closest to the Work site ("Proximate Station") for the applicable month according to the Western Regional Climate Center Website, http//www.wrcc.dri.edu/summary ("WRCCW"), as shown on the *Average of Minimum Temperature* chart on the WRCCW for the Proximate Station, less the mean extreme minimum temperature for the Proximate Station for the applicable month, as shown on the *Minimum of Minimum Temperature Chart* on the WRCCW for the Proximate Station, divided by Two (2);

4.6.11.2.4.2 for any day between November 1 and March 31 for which delay is claimed by Contractor, the recorded maximum temperature at the Work site, as verifiably documented by Contractor, fell below the mean minimum temperature as shown on the *Average of Minimum Temperature* chart on the WRCCW for the Proximate Station;

4.6.11.2.4.3 for any day for which delay is claimed by Contractor, the recorded precipitation at the Work site, as verifiably documented by Contractor, exceeded seventy-five percent (75%) of the daily extreme for the applicable month as shown on the *POR – Daily Precipitation Average and Extreme* chart on the WRCCW for the Proximate Station;

4.6.11.2.4.4 for any day for which delay is claimed by Contractor, the recorded snowfall at the Work site, as verifiably documented by Contractor, exceeded seventy-five percent (75%) of the daily extreme for the applicable month as shown on the *POR – Daily Snowfall Average and Extreme* chart on the WRCCW for the Proximate Station.

4.6.12 COMPENSABLE DELAY, SUSPENSION OR INTERRUPTION.

4.6.12.1 In addition to the other requirements of the Contract Documents, a compensable delay, suspension, or interruption of the Work occurs only when the following conditions are met:

4.6.12.1.1 The delay is caused by DFCM for a reason not permitted by the Contract Documents; and

4.6.12.1.2 Contractor delivers a written notice to the A/E and DFCM within seven (7) days that Contractor knows or should have known of the condition giving rise to the purported compensable delay, suspension, or interruption, and the condition affects the Contract Time as indicated by the last agreed upon critical path schedule.

4.6.12.2 To the extent of the compensable delay, Contractor's total entitlement for all compensable delay damages is the computed result of the following formula: Contract Price divided by Contract Time (in calendar days); the result of which is then multiplied by 0.05; and the result of which is multiplied by the number of calendar days of compensable days allowed under these General Conditions that are beyond the Contract Time. Notwithstanding any other provision of these General Conditions or the Contract Documents, to the extent Contractor is entitled to receive a markup under Sections 7.4.2.5.1 or 7.4.2.5.2 this provision shall be inapplicable, and the markup shall be deemed to include all the compensable delay damages provided by this Section.

4.6.12.3 The length and extent of compensable delay shall be determined, with the use of the Work's critical path schedule by ascertaining the number of additional days added to the Contract Time are needed in order to perform the Work in accordance with the Contract Documents as a result of the delay, suspension, or interruption after receipt of the written notice received by the A/E and DFCM under Section 4.6.12.1.2.

4.6.12.4 Notwithstanding any other provision of these General Conditions, to the extent a non-compensable delay occurs at the same time as a compensable delay, DFCM shall not be responsible for any compensation to Contractor and the Contract Price shall not be increased for the period of the non-compensable delay.

4.6.13 TIME EXTENSION REQUESTS. Contractor shall notify DFCM within seven (7) days of a potential delay and Contractor shall request any and all Contract Time extensions within twenty-one (21) days after Contractor knew or should have known about the delay. Contractor must support any request for a Contract Time extension with a critical path schedule analysis.

4.6.14 LIQUIDATED DAMAGES.

4.6.14.1 Time is of the essence in the Contract Documents. DFCM will suffer damages that are difficult to ascertain for each calendar day the date for Substantial Completion is delayed. Therefore, as agreed damages and not as a penalty, DFCM may offset from any payments due Contractor the sum stated in the Contractor's Agreement, as augmented in Section 4.6.14.2 in the case of continuing delay, for each day Substantial Completion is delayed beyond the date established for Substantial Completion of the Work by the Contract Documents.

4.6.14.2 For each day subsequent to the fourteenth (14th) day after the date established for Substantial Completion of the Work by the Contract Documents, the liquidated damages amount stated in the Contractor's

Agreement shall be increased by ½ percent (0.5%) of the amount stated in the Contractor's Agreement for each day Substantial Completion is delayed beyond the date established for Substantial Completion of the Work by the Contract Documents.

4.6.14.3 The sum for liquidated damages due DFCM by Contractor has been agreed upon by reason of the inconvenience and added costs of administration, engineering, supervision, and other expenses resulting from Contractor's default.

4.6.14.4 To the extent liquidated damages exceed any amounts that would otherwise be due Contractor, Contractor shall be liable for such excess to DFCM.

4.6.14.5 Notwithstanding any other provision of these General Conditions, the availability of liquidated damages to DFCM shall not limit DFCM's right to seek damages or other remedies available under law or equity to the extent such damages or remedies are not based upon delay.

4.6.15 NO WAIVER OF DFCM'S RIGHTS. Permitting Contractor to continue any part of the Work after the time fixed for completion or beyond any authorized extension thereof shall in no way operate as a waiver or estoppel on the part of DFCM of any of its rights under the Contract Documents, including the right to liquidated damages or any other remedies or compensation.

4.7 DOCUMENTS AND SAMPLES AT THE SITE, CERTIFYING "AS-BUILTS". Contractor shall maintain at the Work site one record copy of the Drawings, Specifications, Addenda, authorized Amendments and Modifications, in good order and marked weekly to record changes and selections made during construction, as well as approved Shop Drawings, Product Data, Samples and similar submittals. These items shall be available to the A/E and shall be delivered to the A/E for submittal to DFCM upon completion of the Work, signed by Contractor, certifying that they show complete and exact "as-built" conditions, stating sizes, kind of materials, piping, conduit locations, and similar matters. All notes of encountered or changed conditions shall be included.

4.8 SHOP DRAWINGS, PRODUCT DATA AND SAMPLES.

4.8.1 NOT CONTRACT DOCUMENTS. Shop Drawings, Product Data, Samples and other submittals are not Contract Documents. The submittal shall demonstrate, for those portions of the Work for which the submittal is required, the way Contractor proposes to conform to the information given and the design concept expressed in the Contract Documents.

4.8.2 PROMPTNESS. Contractor shall coordinate submittals prepared by Subcontractors and Sub-subcontractors, review, approve, and submit to the A/E, Shop Drawings, Product Data, Samples and other submittals required by the Contract Documents with reasonable promptness and according to an agreed submittal schedule in such sequence as to cause no delay in the Work, or the activities of DFCM, or separate contractors.

4.8.3 NOT PERFORM UNTIL A/E APPROVES. Contractor shall not perform any portion of the Work requiring submittal and review of Shop Drawings, Product Data, Samples, mock-ups where required or other submittals (including deferred submittals) until the applicable submittal has been approved in writing by the A/E. Contractor shall perform the Work in accordance with the approved submittals. Submittals marked "No-exceptions taken" or its equivalent by the A/E are considered approved for purposes of this Section 4.8.3.

4.8.4 REPRESENTATIONS BY CONTRACTOR. By approving and submitting Shop Drawings, Product Data, Samples, and other submittals, Contractor represents that Contractor has determined and verified materials, field measurements, field construction criteria, manufacturer installation instructions and

procurement and delivery dates related thereto and has checked and coordinated the information contained within such submittals with the requirements of the Work and of the Contract Documents.

4.8.5 CONTRACTOR'S LIABILITY. Contractor shall not be relieved of responsibility for deviations from the requirements of the Contract Documents by the A/E's approval of Shop Drawings, Product Data, Samples, or similar submittals unless Contractor has specifically informed the A/E in writing of such deviation at the time of the submittal and the A/E has given written approval to the specific deviation. Contractor shall not be relieved of responsibility for errors or omissions in Shop Drawings, Product Data, Samples, or other submittals by the A/E's review and approval.

4.8.6 DIRECT SPECIFIC ATTENTION TO REVISIONS. Contractor shall direct specific attention in writing to all revisions on resubmitted Shop Drawings, Product Data, Samples, or other submittals, except those requested by the A/E and indicated on previous submittals.

4.8.7 INFORMATIONAL SUBMITTALS. Informational submittals upon which the A/E is not expected to take responsive action may be so identified in the Contract Documents.

4.8.8 PROFESSIONAL SERVICES. The Contractor shall not be required to provide professional services that constitute the practice of architecture or engineering unless such services are specifically required by the Contract Documents for a portion of the Work or unless the Contractor needs to provide such services in order to carry out the Contractor's responsibilities for construction means, methods, techniques, sequences and procedures. The Contractor shall not be required to provide professional services in violation of applicable law. If professional design services or certifications by a design professional related to systems, materials or equipment are specifically required of the Contractor by the Contract Documents, DFCM and the A/E will specify performance and design criteria that such services must satisfy. The Contractor shall cause such services or certifications to be provided by a properly licensed Design Professional (as that term is defined in Section 4.8.8.1 of these General Conditions), whose signature and seal shall appear on all drawings, calculations, specifications, certifications, Shop Drawings and other submittals prepared by such professional. Each Design Professional providing such services shall carry professional errors and omissions insurance in an amount of at least Two Million Dollars ($2,000,000.00) per claim/annual aggregate with a deductible or self-insured retention of not greater than One Hundred Thousand Dollars ($100,000.00), unless different amounts are authorized by DFCM in writing. Shop Drawings and other submittals related to the Work designed or certified by such Design Professional, if prepared by others, shall bear such Design Professional's written approval when submitted to the A/E. DFCM and the A/E shall be entitled to rely upon the adequacy, accuracy and completeness of the services, certifications and approvals performed or provided by such Design Professional, provided DFCM and A/E have specified to the Contractor performance and design criteria that such services must satisfy. Pursuant to this Section 4.8, the A/E will review, approve or take other appropriate action on submittals only for the limited purpose of checking for conformance with information given and the design concept expressed in the Contract Documents. The Contractor shall not be responsible for the adequacy of the performance and design criteria specified in the Contract Documents.

4.8.8.1 A "Design Professional" is any and all employees or independent contractors directly or indirectly employed by the Contractor, a Subcontractor or a Sub-subcontractor of any tier to perform any professional design services required by the Contract Documents. The Contractor or its Subcontractors or Sub-subcontractors of any tier employing the Design Professional shall require the Design Professional to agree in writing to be bound by the terms of the Contract Documents insofar as they apply to the design services of the Design Professional in the performance of the Work.

4.8.8.2 The Contractor hereby assigns to DFCM all common law, statutory and other rights that the Contractor may have in the drawings, specifications and other documents prepared by the Design Professional for the Work (the "Design Documents"), including all copyrights. The Contractor shall endeavor to obtain a similar assignment to DFCM by the Design Professional and by the Subcontractors or Sub-subcontractors of

any tier employing the Design Professional of their common law, statutory and other rights (including copyrights) in the Design Documents. At the date of final payment or upon the earlier termination of the Contractor's Agreement, the Contractor shall promptly deliver to DFCM hardcopy originals of all Design Documents and all Design Documents in reproducible (not read only) electronic media.

4.8.8.3 The Contractor shall require and hereby represents and warrants to DFCM that the Design Professional is appropriately registered with and licensed by the State of Utah to perform the services required by the Contract Documents to be performed by the Design Professional.

4.8.8.4 All services provided by the Design Professional shall be performed consistent with the professional skill and care ordinarily provided by other design professionals: (1) with the same or similar license; and (2) providing the same or similar design professional service (A) in the same or similar locality, (B) at the same or similar time and (C) under the same or similar circumstances, provided that, if the nature of the project reasonably requires specialized design expertise, the Design Professional shall perform design professional services consistent with such specialized design expertise.

4.8.8.5 Notwithstanding any approval of DFCM or A/E of any Design Documents, the Contractor shall be responsible for assuring that all Design Documents (whether prepared by a Design Professional employed by the Contractor, a Subcontractor or a Sub-subcontractor of any tier) are technically adequate and accurate and are in accordance with all laws, ordinances, codes, regulations or other requirements of governmental authorities having jurisdiction of the Work applicable to the Work on the day of the issuance of such documents and on the day of the use of such documents on the Work.

4.8.8.6 The Contractor shall be responsible and liable to DFCM for any and all losses, costs, and/or expenses incurred by DFCM arising out of, related to and/or connected with errors or omissions in the services provided hereunder by the Design Professional, to the extent that such errors or omissions were caused by the failure of the Design Professional to perform services consistent with the requirements of Section 4.8.8.4 or by other fault of the Design Professional, whether or not such losses, costs and/or expenses were caused by any negligence or other fault of the Contractor. This responsibility and liability shall survive completion of the Work or termination of the Contractor's Agreement.

4.8.8.7 The Contractor shall indemnify and hold harmless DFCM and the other Indemnified Parties (as defined in Section 4.12) from and against any and all third-party claims, demands, losses, liabilities, judgments, costs, expenses and/or attorney fees arising of, related to and/or connected with errors or omissions in the services provided hereunder by the Design Professional, to the extent that such errors or omissions were caused by the failure of the Design Professional to perform services consistent with the requirements of Section 4.8.8.4 or by other fault of the Design Professional, whether or not such third-party claims, demands, losses, liabilities, judgments, costs, expenses and/or attorney fees were caused by any negligence or other fault of the Contractor. This indemnity is in addition to the indemnity provided in Section 4.12 and shall survive completion of the Work or termination of the Contractor's Agreement.

4.8.8.8 The Contractor's or its Subcontractor's or Sub-subcontractor of any tier's agreement with the Design Professional for design services in the performance of the Work shall state that DFCM and its successors and assigns are intended third-party beneficiaries of such agreement and such agreement with the Design Professional shall require the Design Professional to deliver to DFCM a separate agreement wherein the Design Professional shall expressly contract with DFCM to provide the Design Professional's professional services consistent with the standard of care established by Section 4.8.8.4.

4.8.8.9 The Contractor shall indemnify, defend and hold harmless DFCM and the other Indemnified Parties (as defined in Section 4.12 of these General Conditions) from and against any and all claims, demands, losses, liabilities, judgments, costs, expenses and/or attorney fees caused by any suits or claims of infringement of any patent rights or copyrights for materials, methods or systems depicted upon or required by Design Documents

prepared by the Design Professional. This indemnity is in addition to the indemnity provided in Sections 4.11 and 4.12 of these General Conditions and shall survive completion of the Work or termination of the Contractor's Agreement.

4.9 USE OF SITE.

4.9.1 IN GENERAL. Contractor shall confine its equipment, the storage of materials, and the operations of its workers at the Work site to areas permitted by the Contract Documents, laws, rules, regulations, ordinances, orders, and permits and shall not unreasonably encumber the Work site with materials or equipment. Contractor shall take all reasonable steps to secure the Work site and protect the Work from any damage. Upon completion of the Work, Contractor shall leave the Work site free and clear of all waste materials, rubbish, tools, equipment, and surplus materials. Contractor shall at all times keep the Work site free from spilled liquids and chemicals, toxic or otherwise. If such a spill occurs while Contractor has control of the Work site, Contractor shall be responsible to clean the affected areas on or about the Work site and pay all associated costs, fines, and penalties. Notwithstanding the foregoing, Contractor shall not be responsible for any damage to the Work site or the Work to the extent caused by DFCM or DFCM's agents.

4.9.2 ACCESS TO NEIGHBORING PROPERTIES.

4.9.2.1 Contractor shall not, except as provided in the Contract Documents or with DFCM's advance written consent when necessary to perform the Work, interfere with access to properties neighboring the Work site by the owners of such properties and their respective tenants, agents, invitees and guests.

4.9.2.2 Various federal, state, and local agencies and private landowners may own or control lands and facilities either crossed by or adjacent to the Work site. DFCM shall secure and pay for all necessary rights of access to the Work site. Contractor shall comply with all stipulations provided by DFCM and shall maintain a cooperative relationship with all agencies and landowners. Contractor shall not retain on the Work site any person who in the judgment of DFCM prejudices or tends to endanger this cooperation. Contractor shall not enter into any agreement with such agencies or landowners related to the Work without prior approval by DFCM.

4.10 ACCESS TO WORK. Contractor shall provide DFCM and the A/E access to the Work in preparation and progress, at all times and wherever located.

4.11 INTELLECTUAL PROPERTY LICENSES. Contractor shall obtain and pay for all royalties and other license fees for all equipment, property, or processes of Contractor used or purchased in connection with performance of the Work. Contractor shall defend suits or claims for infringement of intellectual property rights and shall hold DFCM and the A/E harmless from loss on account thereof but shall not be responsible for such defense or loss when a particular design, process, or product of a particular manufacturer or manufacturers is required by the Contract Documents. However, if Contractor has reason to believe that the required design, process or product is an infringement of any third party's intellectual property right, Contractor shall be responsible for such defense or loss unless such information is promptly furnished to DFCM in writing.

4.12 INDEMNIFICATION. To the fullest extent permitted by law, Contractor shall release, indemnify, hold harmless, and defend the State of Utah, the State of Utah's institutions, agencies (including, but not limited to, DFCM), departments, divisions, authorities, and instrumentalities, boards, commissions, elected or appointed officers, employees, agents and authorized volunteers (collectively "Indemnified Parties") from and against any and all claims, liabilities, demands, actions, damages, losses and expenses of any nature whatsoever, including, but not limited to, attorneys' fees and defense costs (collectively "Liabilities"), and including those events covered under the blanket Contractual Liability Coverage required under the Contract Documents, arising out of, related to, or connected with any act or omission in the performance of the Work, including the Work of all Subcontractors and their employees, provided that any Liabilities are caused in whole or in part by

the negligent, intentional, or other wrongful act or omission of Contractor, any Subcontractor, their employees, or anyone directly or indirectly employed or the agent of any of them or anyone for whose acts any of them may be liable, regardless of whether or not it is caused in part by an Indemnified Party. Without relieving Contractor of any obligation under the Contract, the Indemnified Parties shall have the right, at their option, to fully participate in the investigation, defense and settlement of any Liabilities.

4.12.1 NOT EXCLUSIVE. The foregoing obligations in this Section 4.12 shall not be construed to negate, abridge, or otherwise reduce any other right or obligation of indemnity which would otherwise exist as to any party or person under the Contract Documents.

4.12.2 NOT LIMITED. The foregoing obligations in this Section 4.12 shall not be limited by a limitation on amount or type of damages, compensation or benefits payable by or for the Contractor or Subcontractor under workers' or workmen's compensation acts, disability benefit acts or other employee benefit acts.

ARTICLE 5. SUBCONTRACTORS.

5.1 AWARD OF SUBCONTRACTS AND OTHER CONTRACTS FOR PORTIONS OF THE WORK.

5.1.1 SUBCONTRACTING WORK PERMITTED; CONDITIONS.

5.1.1.1 Contractor may subcontract portions of the Work.

5.1.1.2 DFCM reserves the right to reject on reasonable ground any Subcontractor. Contractor shall not contract with any person or entity to whom DFCM has made reasonable objection. Contractor shall not be required to contract with anyone to whom Contractor has made reasonable and timely objection, provided that any additional costs associated with Contractor replacing a Subcontractor objected to by Contractor with a replacement Subcontractor not objectionable to Contractor shall be at no cost to DFCM.

5.1.2 SUBSEQUENT CHANGES. After execution of Contractor's Agreement Subcontractors listed by Contractor in accordance with Utah Code § 63A-5b-605 and Rule R23-1-615 may be changed by Contractor only in accordance with the requirements of Utah Code § 63A-5b-605 and R23-1-615.

5.1.2.1 DFCM shall pay the additional costs for a DFCM-requested change in Subcontractor if all of the following conditions are met:

5.1.2.1.1 If DFCM in writing requests the change of a Subcontractor;

5.1.2.1.2 The original Subcontractor is a responsible subcontractor that meets the requirements of the Contract Documents; and

5.1.2.1.3 The original Subcontractor did not withdraw as a Subcontractor on the Work.

5.1.2.2 In all other circumstances, Contractor shall pay the additional cost for a change in a Subcontractor.

5.1.3 BUSINESS AND LICENSING REQUIREMENTS. All Subcontractors used by Contractor shall have secured, at their own expense, all necessary professional accreditations, registrations, and licenses in the state of Utah.

5.1.4 BONDING OF SUBCONTRACTORS. Subcontractors, as identified by DFCM in the procurement documents, may be required to submit performance and payment bonds to cover the full extent of

their portion of the Work. This provision does not in any way limit the right of Contractor to have Subcontractors at any tier be required to have a performance and/or payment bond at Contractor's expense.

5.1.5 SUBCONTRACTOR DEFAULT INSURANCE. If the Contract Price includes any amount to compensate the Contractor for Subcontractor Default Insurance ("SDI"), then, notwithstanding anything in the Contract Documents to the contrary:

5.1.5.1 DFCM shall be added to the SDI by a financial interest endorsement reasonably acceptable to DFCM at no cost to DFCM;

5.1.5.2 If the Contract Documents provide for Contractor contingency, no Contractor contingency may be expended for any Subcontractor default or for any expenses and/or losses arising out of, connected with and/or related to any Subcontractor default;

5.1.5.3 Contractor shall in no event be entitled to an increase in the Contract Price and/or extension of the Contract Time for a Subcontractor default or for expense, losses and/or delays arising out of, connected with and/or related in any way to a Subcontractor default; and

5.1.5.4 The cost of SDI is included in Contractor's overhead and profit for purposes of Article 7.

5.2 SUBCONTRACTUAL RELATIONS.

5.2.1 CONTRACTOR FULLY RESPONSIBLE. Subcontracting any portion of the Work shall not relieve Contractor of Contractor's obligations or duties under the Contract Documents, Contractor shall be fully responsible and liable to DFCM for the acts and omissions of all Subcontractors at any tier and their employees and agents and Contractor shall maintain complete control over all Subcontractors. Neither the consent of DFCM to a Subcontractor proposed by Contractor, nor anything contained in the Contract Documents shall be deemed to create a contractual relationship between a Subcontractor at any tier and DFCM.

5.2.2 COMPLY WITH CONTRACT DOCUMENTS. By appropriate enforceable agreement Contractor shall require each Subcontractor to be bound to Contractor by the terms of the Contract Documents, and to assume toward Contractor all the obligations and responsibilities that Contractor, by the Contract Documents, assumes towards DFCM and the A/E.

5.2.3 RIGHTS. Each Subcontractor agreement shall preserve and protect the rights of DFCM under the Contract Documents with respect to that portion of the Work to be performed by the Subcontractor so that subcontracting any portion of the Work shall not prejudice any rights of DFCM under the Contract Documents, and shall allow to the Subcontractor, unless specifically provided otherwise in the Subcontractor agreement, the benefit of all rights and remedies against Contractor that Contractor, by the Contract Documents, has against DFCM.

5.2.4 SUB-SUBCONTRACTORS. Contractor shall require each Subcontractor to enter into similar agreements with Sub-subcontractors and to require such Sub-subcontractors to enter into similar agreements with lower tier Sub-subcontractors that comply with the requirements of Sections 5.2.2 and 5.2.3.

5.2.5 DOCUMENT COPIES. Contractor shall make available to each proposed Subcontractor, prior to execution of the Subcontractor agreement, copies of the Contract Documents to which the Subcontractor shall be bound. Contractor shall require Subcontractors to make copies of applicable portions of the Contract Documents available to their respective proposed Sub-subcontractors.

5.3 CONTINGENT ASSIGNMENT OF SUBCONTRACTS TO DFCM. Contractor contingently assigns each Subcontractor agreement with a Subcontractor for a portion of the Work to DFCM, provided that

the assignment is effective only after termination of the Contractor's Agreement by DFCM for cause pursuant to Section 12.2 or stoppage of the Work by DFCM pursuant to Section 12.5, and only for those Subcontractor agreements that DFCM accepts by notifying the Subcontractor in writing. Contractor shall remain liable for all obligations incurred under assigned Subcontractor agreements prior to DFCM's acceptance of such assignment.

ARTICLE 6. PROTECTION OF PERSONS AND PROPERTY.

6.1 SAFETY OF PERSONS AND PROPERTY.

6.1.1 CONTRACTOR RESPONSIBILITY. Contractor shall be solely responsible for initiating, maintaining, and supervising all safety precautions and programs in connection with the performance of the Work. Contractor shall seek to minimize the risk of bodily injury, property damage, and environmental harm by taking all reasonable precautions to protect:

6.1.1.1 All persons at and/or in proximity to the Work site;

6.1.1.2 Materials and equipment to be incorporated in the Work, whether in storage on or off the Work site, under the care, custody, or control of Contractor or a Subcontractor;

6.1.1.3 Property and structures located at the Work site and adjacent to the Work site, whether or not such property and structures are part of the Work, such as trees, shrubs, lawns, walks, pavements, roadways, structures and utilities not designated for removal, relocation or replacement in the course of construction; and

6.1.1.4 The environment.

6.1.2 SAFETY PROGRAM, PRECAUTIONS. Contractor shall institute and provide to DFCM a project specific safety program at the start of the Work to minimize accidents. The program shall continue to the final completion of the Work and conform to applicable laws, rules, and regulations. including without limitation. the Utah Occupational Safety and Health Rules as published by the Utah Labor Commission - UOSH Division at Utah Administrative Code, R614. Contractor shall post signs, erect barriers, and provide those items necessary to implement the safety program. As soon as Contractor proceeds with the Work, Contractor shall have all workers and all visitors on the Work site wear safety hard hats, as well as all other appropriate safety apparel such as safety glasses and shoes, and obey all safety laws, rules, and regulations. Contractor shall post a sign in a conspicuous location indicating the necessity of wearing hard hats, and Contractor shall loan such hard hats to visitors. Contractor shall maintain a clean and orderly Work site.

6.1.3 COMPLIANCE WITH LAWS. Contractor shall give notices and comply with applicable laws, rules, regulations, ordinances, and orders of public authorities applicable to the safety of persons and property and their protection from damage, injury and loss. In particular, Contractor shall comply with all applicable provisions of federal, state and municipal safety laws, rules and regulations, specifically including, without limitation, building codes, to prevent accidents and injury to persons on, about or adjacent to the Work site.

6.1.4 ERECT AND MAINTAIN SAFEGUARDS. As required by existing conditions at the Work site and proper and safe performance of the Work, Contractor shall erect and maintain safeguards for safety and protection, including effective fences, danger signs, barricades and other warnings against hazards. Contractor shall also promulgate safety regulations and notify owners and users of adjacent sites and/or utilities before performing Work that may impact such adjacent sites and/or utilities.

6.1.5 UTMOST CARE. When use or storage of explosives or other dangerous materials or equipment or unusual methods are necessary for execution of the Work, Contractor shall exercise utmost care and carry on such activities under the supervision of properly qualified personnel.

6.1.6 PROMPT REMEDY. Contractor shall promptly remedy any damage and loss (other than damage or loss insured under property insurance required by Section 10.2) to persons, property and/or the environment arising in conjunction with the Work caused in whole or in part by Contractor, Subcontractors, or any person or entity for whose acts Contractor is responsible, without cost or expense to DFCM.

6.1.7 SAFETY DESIGNEE. Contractor shall designate a responsible member of Contractor's organization at the Work site whose duty shall be the prevention of accidents, damage, injury and loss. This person shall be Contractor's superintendent, unless otherwise designated by Contractor in writing to DFCM and the A/E.

6.1.8 LOAD SAFETY. Contractor shall not load or permit any part of the construction or Work site to be loaded so as to endanger its safety and/or the safety of persons at or in the vicinity of the Work site.

6.1.9 OFF-SITE RESPONSIBILITY. In addition to its other obligations under this Article 6, the Contractor shall, at Contractor's sole cost and expense, promptly repair any damage or disturbance to walls, utilities, streets, ways, sidewalks, curbs and the property of the State and third parties (including municipalities and other governmental agencies) resulting from the performance of the Work, whether by Contractor or by Contractor's Subcontractors at any tier. The Contractor shall not cause materials, including soil and debris, to be placed or left on streets or ways.

6.1.10 EMERGENCIES. In an emergency affecting safety of persons or property, Contractor shall act, at Contractor's discretion, to prevent threatened damage, injury or loss. Contractor shall promptly notify DFCM of the action taken.

6.2 HAZARDOUS MATERIALS. In the event Contractor encounters at the Work site material reasonably believed to be asbestos, polychlorinated biphenyl (PCB), or any other hazardous waste or substance that may endanger the health of persons performing Work or being at the Work site that is not part of the Work and/or disclosed by the Contract Documents**,** Contractor shall immediately stop Work in the area affected and immediately report the condition to DFCM and the A/E by phone with a follow-up email. Contractor shall resume the Work in the affected area upon written direction provided by DFCM. Except to the extent provided otherwise in the Contract Documents, or if the presence of hazardous materials is due to the fault of Contractor, Contractor shall not be required to perform, without Contractor's consent, any Work relating to asbestos, polychlorinated biphenyl (PCB), or any other hazardous waste or substance.

6.3 HISTORICAL AND ARCHEOLOGICAL CONSIDERATIONS. In the event Contractor discovers any cultural, historical, or archeological material that is either recognized as an item to be protected under federal, state, or local law or regulation, or is an item of obvious value to the State of Utah, Contractor shall cease any Work that would interfere with such discovery and immediately report the condition to DFCM and the A/E by phone with a follow-up email. Contractor shall resume the Work upon the direction of DFCM. Contractor shall ensure cooperation with any DFCM-recognized archaeologist or other cultural/historical expert.

6.4 CONTRACTOR LIABILITY. If Contractor fails in any of its obligations in Sections 6.2 through 6.3, Contractor shall be liable for any damages to DFCM, the State of Utah, or any third party resulting from such noncompliance. Contractor shall also be liable for any mitigation or restoration effort resulting from such noncompliance. To the extent all the following is met, the presence of hazardous material or cultural, historical, or archeological material at the Work site shall qualify as a concealed or unforeseen condition under Section 7.1.5:

6.4.1 The presence of such material is not reasonably foreseeable given the site conditions that Contractor is or should have been aware of;

6.4.2 The presence of such material is not identified in any part of the Contract Documents;

6.4.3 Contractor has undertaken all proper action to mitigate any impact of the discovery of such material on the Contract Time and/or Contract Price;

6.4.4 The discovery of such material increases the Contract Time and/or Contract Price from what is stated in the Contract Documents; and

6.4.5 The requirements of Section 7.1.5 and the Contract Documents are met.

ARTICLE 7. MODIFICATIONS, PRs & PCOs, PRE AND CLAIM PROCESS.

7.1 MODIFICATIONS: IN GENERAL.

7.1.1 TYPES OF MODIFICATIONS AND LIMITATIONS. Changes in the Work may be accomplished after execution of the Contractor's Agreement, and without invalidating the Contract Documents, by ASI, Change Order or Construction Change Directive, subject to the limitations stated in this Article 7 and elsewhere in the Contract Documents. Contractor must have a written Change Order or Construction Change Directive executed by DFCM under this Article 7 prior to proceeding with any Work for which Contractor intends to request an increase in the Contract Price and/or an extension of the Contract Time.

7.1.2 BY WHOM ISSUED. The A/E or DFCM may issue ASIs not involving an adjustment in the Contract Price or an extension of the Contract Time which are not inconsistent with the intent of the Contract Documents. A Change Order or Construction Change Directive shall be issued by DFCM. The A/E shall prepare Change Orders and Construction Change Directives with specific documentation and data for DFCM's approval and execution in accordance with the Contract Documents.

7.1.3 CONTRACTOR TO PROCEED UNLESS OTHERWISE STATED. Changes in the Work shall be performed under applicable provisions of the Contract Documents, and Contractor shall proceed promptly, unless otherwise provided in the ASI, Change Order or Construction Change Directive.

7.1.4 ADJUSTING UNIT PRICES. If unit prices are stated in the Contract Documents or subsequently agreed upon, and if quantities originally contemplated are so changed in a proposed Change Order or Construction Change Directive that application of such unit prices to quantities of Work proposed shall cause a substantial inequity to DFCM or Contractor, the applicable unit prices may be equitably adjusted.

7.1.5 CONCEALED OR UNKNOWN CONDITIONS. Contractor must file a written notice with DFCM within seven (7) calendar days of the date that Contractor knew or should have known of a site condition described below or Contractor shall be deemed to waive any right to file any PCO, PRE, or Claim for an increase in the Contract Price and/or extension of the Contract Time related to such condition:

7.1.5.1 If Contractor encounters unknown and reasonably unforeseeable subsurface or otherwise concealed physical conditions, including hazardous or historical/cultural/archeological materials under Article 6, which differ materially from those indicated by the Contract Documents or which would have been revealed by a reasonably thorough site inspection; or

7.1.5.2 If Contractor encounters unknown physical conditions of an unusual nature which differ materially from those ordinarily found to exist and generally recognized as inherent in construction activities of the character provided for in the Contract Documents.

7.1.6 INCREASE IN CONTRACT TIME. To the extent DFCM and/or the State of Utah is damaged by the failure of Contractor to provide the notice required by Section 7.1.5 after the Contractor knows or should

have known of such site condition, Contractor shall be liable for liquidated damages attributable thereto, as well as any damages to the State of Utah and/or DFCM that are allowable in addition to liquidated damages.

7.1.7 ALLOWANCES.

7.1.7.1 The Contractor has included in the Contract Price all allowances stated in the Contract Documents. Items covered by allowances shall be supplied for such amounts and by such persons or entities as DFCM may direct, but the Contractor shall not be required to employ persons or entities to whom the Contractor has reasonable objection.

7.1.7.2 Unless otherwise provided in the Contract Documents:

7.1.7.2.1 Allowances shall cover the cost to the Contractor of materials and equipment delivered at the Work site and all required taxes, less applicable trade discounts;

7.1.7.2.2 Allowances shall cover the Contractor's costs of unloading and handling at the Work site, labor, installation costs and other expenses contemplated for allowance items of the Work, including the Contractor's overhead and profit.

7.1.7.2.3 Whenever costs are more than or less than allowances, the Contract Price for the Work shall be adjusted accordingly by Change Order. The amount of the Change Order shall reflect (1) the difference between actual costs and the allowances under Section 7.1.7.2.1 and (2) changes in Contractor's costs under Section 7.1.7.2.2.

7.1.7.3 Materials and equipment under an allowance shall be selected by DFCM with reasonable promptness.

7.2 CONTRACTOR INITIATED REQUESTS.

7.2.1 THE REQUEST FOR INFORMATION ("RFI") PROCESS AND TIME TO FILE. Contractor may file an RFI with the A/E regarding any question the answer to which will assist Contractor in the proper completion of the Work, including, but not limited to, issues related to the Contract Documents, Drawings, and Specifications. The RFI shall be filed with the A/E in a timely manner so as not to prejudice DFCM as to the quality, time, or cost related to the Work.

7.2.2 PROPOSED CHANGE ORDER ("PCO"). Within seven (7) days after Contractor knows or should know of a situation or condition for which Contractor anticipates requesting an increase in the Contract Price and/or extension of the Contract Time, Contractor must file a Proposed Change Order ("PCO") with DFCM, or Contractor shall be deemed to waive any right to claim an increase in the Contract Price and/or extension of the Contract Time related to such situation or condition. The PCO shall include all documentation supporting the PCO available to Contractor at the time of filing and Contractor shall thereafter diligently pursue the supplementation(s) of such documentation and promptly deliver such supplementation(s) to DFCM.

7.2.2.1 One of the following may occur after a PCO is filed with DFCM:

7.2.2.1.1 DFCM, after considering any input by the A/E, may reach an agreement with Contractor and issue a Change Order.

7.2.2.1.2 DFCM, after considering any input by the A/E, may issue a Construction Change Directive.

7.2.2.1.3 If DFCM, after considering any input by the A/E, disagrees with Contractor's PCO, DFCM may seek additional information or verification from Contractor, the A/E, or other sources, and may negotiate with

Contractor, may issue a Change Order upon such later agreement, may issue or retract an issued PR, or may issue a Construction Change Directive.

7.2.2.2 If a Construction Change Directive is issued which identifies DFCM's position in regard to a Contract Price and/or Contract Time adjustment or if a PCO is denied by DFCM, Contractor must file a PRE no later than twenty-one (21) days after Contractor's receipt of the Construction Change Directive or such denial of the PCO. Failure to timely file a PRE shall be deemed to waive any right to an increase in the Contract Price and/or extension of the Contract Time related to a Construction Change Directive beyond that identified by DFCM in the Construction Change Directive, if any, or denial of the PCO. Such waiver shall entitle DFCM to convert a Construction Change Directive into a Change Order, whether or not executed by Contractor.

7.2.2.3 If a Construction Change Directive leaves open the determination of an increase in the Contract Price and/or extension of the Contract Time related to a change in the Work, then the time period for commencement of filing the PRE shall not accrue until such time as DFCM has conveyed to Contractor DFCM's position as to increase, if any, in the Contract Price and/or extension, if any, of the Contract Time as a result of the change in the Work.

7.2.2.4 The Contractor must continually cooperate with DFCM in providing data, documentation and efforts to resolve any issues related to a PCO.

7.2.3 SUBSTITUTIONS. The Contractor may make substitutions only with the consent of DFCM, after evaluation by the A/E and in accordance with a Change Order. Substitutions will be considered after the award of the Contractor's Agreement only when a PCO is submitted by the Contractor to substitute a non-specified product for a product specified in the Contract Documents, under the following conditions:

7.2.3.1 The PCO is accompanied by complete data on the proposed substitution substantiating compliance with the design intent and performance requirements of the Contract Documents, including product identification and description, performance and test data, references and samples where applicable, comparison of the proposed substitution with the products specified or named in the Contract Documents, and the impact of the substitution upon the Contract Time.

7.2.3.2. The PCO is accompanied by accurate cost data on the proposed substitution and comparison with the products specified, whether or not modification of the Contract Price is to be a consideration.

7.2.3.3 The Contractor is responsible for any additional costs for the A/E's additional services caused by the evaluation of the proposed substitution and/or the substitution of products.

7.2.3.4 The PCO for substitution by the Contractor shall constitute a certification by the Contractor that the Contractor has investigated the proposed substitute product and determined that it is equal or superior in all respects to that specified; the cost data presented by the Contractor is complete and includes all related costs under the Contract Documents, including the A/E's additional services; the Contractor waives all claims for additional costs related to the substitution which subsequently become apparent; the Contractor will provide the same guarantee or warranty for the substituted product that the Contractor would have provided for the product specified in the Contract Documents; and the Contractor will coordinate the installation of the accepted substitute, making such changes as may be required for the Work to be properly completed in all respects.

7.2.3.5 Substitutions will not be considered by the A/E or DFCM if they are intended or implied by submittals of Shop Drawings, Product Data or Samples without a PCO for substitution or when for their implementation they require a substantial revision of the Contract Documents in order to accommodate their use.

7.3 PROPOSAL REQUEST INITIATED BY DFCM. DFCM may submit a Proposal Request to Contractor seeking information, data, impact on the Contract Price and/or impact on the Contract Time for a change in the Work or other modification to the Contract Documents. The PR shall provide a time limit for Contractor to file a response with the A/E and DFCM. If a proposal is not timely provided by Contractor, DFCM may calculate a Change Order under Section 7.4.2. Upon timely receipt of a proposal, one of the following shall occur:

7.3.1 IF AGREEMENT, CHANGE ORDER ISSUED. DFCM, after considering any input by the A/E, may reach an agreement with the Contractor and issue a Change Order.

7.3.2 IF DISAGREEMENT. If DFCM disagrees with Contractor's proposal, after considering any input from the A/E, DFCM may seek additional information or verification from Contractor or other sources, may negotiate with Contractor, may issue a Change Order upon such later agreement, may retract the PR, or may issue a Construction Change Directive. If a Construction Change Directive is issued that identifies DFCM's position in regard to the increase, if any in the Contract Price and/or extension, if any, of the Contract Time, Contractor must file a PRE within twenty-one (21) days of Contractor's receipt of the Construction Change Directive, or Contractor shall be deemed to waive any right for an increase in the Contract Price and/or extension of the Contract Time as a result of the issuance of the Construction Change Directive beyond that identified by DFCM in the Construction Change Directive, if any. Such waiver shall entitle DFCM to convert the Construction Change Directive into a Change Order, whether or not executed by Contractor. If the Construction Change Directive leaves open the determination of an increase, if any, in the Contract Price and/or extension, if any, of the Contract Time related to the change in the Work, then the time period for commencement of filing the PRE shall not accrue until such time as DFCM has conveyed to Contractor DFCM's position as to the increase, if any, in the Contract Price and/or extension, if any, of the Contract Time resulting from the change in the Work.

7.4 CHANGE ORDERS.

7.4.1 ADJUSTING PRICE BASED UPON AGREEMENT. If a Change Order provides for an adjustment to the Contract Price, the adjustment shall be based on the mutual agreement of Contractor and DFCM, including any terms mandated by unit price agreements or other terms of the Contract Documents.

7.4.2 DFCM RESOLUTION OF PRICE IN THE ABSENCE OF AN AGREEMENT UNDER SECTION 7.4.1. In the absence of an agreement under Section 7.4.1, the adjustment in Contract Price shall be based on an itemized accounting of costs and savings supported by appropriate data. Unless otherwise provided in the Contract Documents, costs for the purposes of this Section shall be limited to the following:

7.4.2.1 All direct and indirect costs of labor; including workers' compensation insurance, social security, and other federal and state payroll-based taxes, and payroll-based fringe benefits paid by Contractor so long as they are reasonable and no higher than that charged to other clients;

7.4.2.2 Costs of materials, on-site temporary facilities, supplies, and equipment (except hand tools) required for or incorporated into the Work;

7.4.2.3 Rental costs of machinery, equipment, tools (except hand tools), and on-site temporary facilities, whether rented from Contractor or others;

7.4.2.4 Costs of permits and other fees, sales, use or similar taxes related to the Work; and

7.4.2.5 Overhead and profit. The markups stated herein for overhead and profit are intended to cover the Contractor's profit and all indirect costs associated with a change in the Work. Items covered by such markups include, but are not limited to: home office expenses, branch office and field office overhead expense of any

kind; project management; estimating, engineering; coordinating; expediting; purchasing; billing and invoicing; detailing; legal, accounting, data processing or other administrative expenses; computer and telephone costs (including computer and phone allowances); shop drawings; liability insurance premium, auto insurance premium, performance and payment bond premium and SDI; vehicle costs (including vehicle allowances); ESOP related costs; and warranty expense costs. The cost for the use of small tools is also to be considered covered by such markups. Small tools shall be defined as tools and equipment (power or non-power) with an individual purchase cost of less than Seven Hundred Fifty Dollars ($750).

7.4.2.5.1 The maximum markup percentage to be paid to any contractor (regardless of tier) including Contractor, a Subcontractor and/or Sub-subcontractor on self-performed work shall be a single markup percentage not-to-exceed fifteen percent (15%) of the net increased direct cost of: (A) direct labor and allowable labor burden costs applicable to the change in the Work; (B) the net cost of material and installed equipment incorporated into the change in the Work, and (C) net rental cost of major equipment and related fuel costs necessary to complete the change in the Work;

7.4.2.5.2 With respect to pricing the portion of Change Orders involving work performed by lower tier contractors, including Subcontractors and Sub-subcontractors, the maximum markup percentage allowable to the Contractor, Subcontractor or Sub-subcontractor supervising the lower tier contractor's work shall not exceed seven percent (7%) of the net increase of all approved changes in the Work performed by all contractors combined for any particular Change Order.

7.4.2.5.3 Contractor agrees to include these limitations on Change Order pricing in Contractor's subcontracts with Subcontractors and shall likewise require all of Contractor's Subcontractors to include the same provisions in all sub-subcontracts with their respective Sub-subcontractors of any tier.

7.4.3 CREDITS. The amount of credit to be allowed by Contractor to DFCM for a deletion or change in the Work which results in a net decrease in the Contract Price shall be actual net cost as confirmed to DFCM based upon corroboration by an appropriate source, provided, however, the application of the markup percentages referenced in Section 7.4.2.5 for overhead and profit will apply only to additive change orders. In those instances where a change in the Work involves both additive and deductive work, the additions and deductions will be netted and the markup percentage adjustments will be applied to the net additive amount, if any.

7.4.4 EFFECT OF A CHANGE ORDER. A Change Order signed by the Contractor constitutes the Contractor's agreement that, when implemented by DFCM, the adjustment in the Contract Price, if any, and/or the adjustment in the Contract Time, if any, for the change in the Work shall fully and finally compensate the Contractor and its Subcontractors and Sub-subcontractors of any tier for any and all additional costs, damages or expenses arising directly or indirectly out of the change in the Work described in the Change Order.

7.4.4.1 All Change Orders shall be conclusively presumed to constitute settlement of all Claims for direct or indirect damages of the Contractor, its Subcontractors and their respective Sub-subcontractors of any tier arising out of the change in the Work. This shall include, but is not limited to, any and all so-called "delay," "equitable adjustment," "impact," "cumulative impact," "acceleration," "constructive acceleration," "inefficiency," "interference," "indirect," "ripple" or "consequential" claims, costs or damages and all direct or indirect costs pertaining to the Contractor's home office, branch offices, or field site office and all other costs and effects whatsoever relating to the change in the Work.

7.4.4.2 Any statement unilaterally added by the Contractor to a Change Order or contained in any transmittal or separate correspondence wherein the Contractor unilaterally attempts to reserve rights to seek any further increases in the Contract Price and/or further extensions of the Contract Time for a change in the Work that is the subject of the Change Order and/or arising out of, related to and/or connected with the change in the Work described in the Change Order shall be null and void.

7.5 CONSTRUCTION CHANGE DIRECTIVES.

7.5.1 WHEN USED AND CONTRACTOR'S RIGHT TO CHALLENGE. Without invalidating the Contractor's Agreement, DFCM reserves the right to unilaterally issue, in DFCM's sole discretion, a Construction Change Directive that requires Contractor to proceed with a change in the Work. DFCM may order minor changes within the scope of Work without granting an adjustment in the Contract Price or an extension of the Contract Time if such minor changes within the scope of Work are consistent with the intent of the Contract Documents. In order to expedite the Work and avoid or minimize delays in the Work that may affect the Contract Price or Contract Time, the Contract Documents shall be amended as described below. If the Construction Change Directive leaves open the determination of an increase, if any, in the Contract Price and/or extension, if any, of the Contract Time related to the change in the Work, then the Construction Change Directive shall indicate the timeframe(s) in which Contractor shall provide further information to resolve such open issue(s). When DFCM and Contractor agree upon an increase, if any, in the Contract Price and/or extension, if any, in the Contract Time related to a Construction Change Directive, the parties shall execute a Change Order. Additionally, the Construction Change Directive may be converted to a Change Order under Section 7.2.2.2 or Section 7.3.2.

7.5.2 PROCEED WITH WORK. Upon receipt of a Construction Change Directive, Contractor shall promptly proceed with the change in the Work involved.

7.5.3 INTERIM PAYMENTS BY DFCM. Pending the final determination of the increase in the Contract Price, if any, associated with a Construction Change Directive, DFCM shall pay any undisputed amount to Contractor.

7.6 ASI. The A/E may at any time that is consistent with maintaining the quality, safety, time, budget, and function of the Work, issue to Contractor an ASI after approval from DFCM is obtained.

7.7 PROCEDURE FOR PRELIMINARY RESOLUTION EFFORTS.

7.7.1 REQUEST FOR PRELIMINARY RESOLUTION EFFORT (PRE). If Contractor wishes to raise an issue related to an alleged breach of contract by DFCM or an issue concerning time or money, Contractor shall file a PRE as a prerequisite for any consideration of the issue by DFCM. The labeling of the notice or request shall not preclude the consideration of the issue by DFCM.

7.7.2 TIME FOR FILING. The PRE must be filed in writing with DFCM within twenty-one (21) days of any of the following:

7.7.2.1 Issuance of a Construction Change Directive that states the adjustment in Contract Price and/or Contract Time, if any, if Contractor disagrees with such adjustment;

7.7.2.2 Issuance of a statement of DFCM's position with respect to the adjustment in Contract Price and/or Contract Time, if any, in a previously issued Construction Change Directive that left open the adjustment in Contract Price and/or Contract Time, if Contractor disagrees with such statement;

7.7.2.3 Issuance of a denial of a PCO by DFCM;

7.7.2.4 In the case of a Subcontractor, after the expiration of the time period for the Contractor/Subcontractor PRE process under Section 7.7.5; or

7.7.2.5 Except as provided in Section 7.2.2, when Contractor knows or should have known about any other issue where Contractor seeks an adjustment in the Contract Price, Contract Time and/or other relief from DFCM.

7.7.3 CONTENT REQUIREMENT. The PRE shall be required to include in writing to the extent information is reasonably available at the time of filing of the PRE:

7.7.3.1 A description of the issue;

7.7.3.2 The potential impact on the Work, Contract Price and/or Contract Time; and

7.7.3.3 An indication of the relief sought.

7.7.4 SUPPLEMENTATION. Additional detail of the content requirement under Section 7.7.3 shall be provided later if the detail is not yet available at the initial filing as follows:

7.7.4.1 While the issue is continuing or the impact is being determined, Contractor shall provide a written updated status report every thirty (30) days or as otherwise reasonably requested by DFCM; and

7.7.4.2 After the issue is concluded and/or the impact is determinable, complete information, including any impacts on Contract Price, Contract Time and/or other relief requested, if any, must be provided to DFCM within twenty-one (21) days of the earlier of the date the issue is concluded or the impact is determinable.

7.7.5 SUBCONTRACTORS. Contractor must include the provisions of this Section 7.7.5 in Contractor's subcontract with each Subcontractor and require each Subcontractor to do likewise in each Subcontractor's sub-subcontracts with Sub-subcontractors. At Contractor's discretion, Contractor may allow a Sub-subcontractor at the second tier and beyond to submit a PRE directly to Contractor.

7.7.5.1 In order for a Subcontractor at any tier to be involved with the PRE of DFCM, the following conditions and process shall apply:

7.7.5.1.1 The Subcontractor must have attempted to resolve the issue with Contractor, including the submission of a PRE with Contractor.

7.7.5.1.2 The Subcontractor must file a copy of the PRE with DFCM;

7.7.5.1.3 The PRE to Contractor must meet the time, content, and supplementation requirements of Sections 7.7.2, 7.7.3 and 7.7.4. The triggering event for a Subcontractor to file a PRE shall be the time at which the issue cannot be resolved through negotiation;

7.7.5.1.4 The PRE submitted to Contractor shall only be eligible for consideration in DFCM's PRE process to the extent the issue is reasonably related to the performance of DFCM or an entity for which DFCM is liable;

7.7.5.1.5 Contractor shall resolve the PRE with the Subcontractor within sixty (60) days of its submittal to Contractor or such other time period as subsequently agreed to by the Subcontractor in writing. If Contractor fails to resolve the PRE with the Subcontractor within such required time period, the Subcontractor may submit in writing the PRE with Contractor and DFCM. In order to be eligible for DFCM's consideration of the PRE, the Subcontractor must submit the PRE within twenty-one (21) days of the expiration of the time period for the Contractor/Subcontractor PRE process. DFCM shall consider the PRE as being submitted by Contractor on behalf of the Subcontractor;

7.7.5.1.6 Upon such PRE being submitted, Contractor shall cooperate with DFCM in reviewing the issue;

7.7.5.1.7 DFCM shall not be obligated to consider any submission which is not in accordance with any provision of this Section 7.7;

7.7.5.1.8 The Subcontractor may accompany Contractor in participating with DFCM regarding the PRE raised by the Subcontractor. DFCM shall not be precluded from meeting with Contractor separately, and it shall be the responsibility of Contractor to keep the Subcontractor informed of any such meetings; and

7.7.5.1.9 Notwithstanding any provision of this Section 7.7.5, a Subcontractor shall be entitled to pursue a payment bond claim.

7.7.6 INFORMATION AND MEETINGS. DFCM may request additional information and may meet with the parties involved with the issue.

7.7.7 CONTRACTOR REQUIRED TO CONTINUE PERFORMANCE. Pending the final resolution of the issue, unless otherwise agreed upon in writing by DFCM, Contractor shall proceed diligently with performance of the Work and DFCM shall continue to make payments of undisputed amounts in accordance with the Contract Documents.

7.7.8 DECISION. DFCM shall issue to Contractor, and any other third party brought into the process by DFCM as being potentially liable to DFCM, a written decision providing the basis for the decision on the issues presented by all of the parties within thirty (30) days of receipt of all the information required under Sections 7.7.3 and 7.7.4.

7.7.9 DECISION FINAL UNLESS CLAIM SUBMITTED. The decision by DFCM shall be final, and not subject to any further administrative or judicial review (not including judicial enforcement) unless a Claim is submitted in accordance with these General Conditions.

7.7.10 EXTENSION REQUIRES MUTUAL AGREEMENT. Any time period specified in Section 7.7 may be extended by mutual agreement of Contractor and DFCM.

7.7.11 IF DECISION NOT ISSUED. If the decision is not issued within the thirty (30) day period, stated in Section 7.7.8 including any agreed to extensions, the issue may be pursued as a Claim.

7.7.12 PAYMENT FOR PERFORMANCE.

7.7.12.1 Except as otherwise provided in the Contract Documents, any final decision where DFCM is to pay additional monies to Contractor, shall not be delayed by any PRE, Claim, or appeal by another party.

7.7.12.2 Payment to Contractor in accordance with any final decision shall be made by DFCM consistent with the Contract Documents.

7.7.12.3 Notwithstanding any other provision of the Contract Documents, payment to Contractor shall be subject to any set-off, claims, or counterclaims of DFCM.

7.7.12.4 Payment to Contractor for a Subcontractor issue submitted by the Contractor shall be paid by Contractor to Subcontractor in accordance with the subcontract between Contractor and Subcontractor.

7.7.12.5 Any payment or performance determined owing by Contractor to DFCM shall be made in accordance with the Contract Documents.

7.8. RESOLUTION OF CLAIM.

7.8.1 CLAIM. If the decision on the PRE is not issued within the required timeframe or if Contractor is not satisfied with the decision, Contractor, or other party brought into the process by DFCM, may submit a Claim in accordance with this Section 7.8 as a prerequisite for any further consideration by DFCM or the right to any judicial review of the issue giving rise to the Claim.

7.8.2 SUBCONTRACTORS. In order for a Subcontractor to have its issue considered in the Claim process by DFCM, the Subcontractor that had its issue considered under Section 7.7.5 may submit the issue as a Claim by filing it with Contractor and DFCM within the same timeframe and with the same content requirements as required of a Claim submitted by Contractor under this Section 7.8.2. DFCM shall consider the Claim as being submitted by Contractor on behalf of the Subcontractor. Under no circumstances shall any provision of these General Conditions or the Contract Documents be construed so as to create any contractual relationship between DFCM and any Subcontractor.

7.8.2.1 Upon such Claim being submitted, the Contractor shall fully cooperate with the Director, the person(s) evaluating the claim and any subsequent reviewing authority.

7.8.2.2 The Director shall not be obligated to consider any submission which is not in accordance with this Section 7.8.2.

7.8.2.3 The Subcontractor may accompany Contractor in participating with the Director, the person(s) evaluating the Claim and any subsequent reviewing authority regarding the Claim. The Director, the person(s) evaluating the Claim, and any subsequent reviewing authority is not precluded from meeting with Contractor separately, and it shall be the responsibility of Contractor to keep the Subcontractor informed of any such meetings and matters discussed.

7.8.2.4 Notwithstanding any provision of this Section 7.8, a Subcontractor shall be entitled to pursue a payment bond claim.

7.8.3 TIME FOR FILING. The Claim must be filed in writing promptly with the Director of DFCM, but in no case more than twenty-one (21) days after the decision is issued on the PRE under Section 7.7.8 or no more than twenty-one (21) days after the thirty (30) day period under Section 7.7.11 has expired with a decision not issued.

7.8.4 CONTENT REQUIREMENT. The written Claim shall include:

7.8.4.1 A description of the issues in dispute;

7.8.4.2 The basis for the Claim, including documentation and analysis required by the Contract Documents and applicable law and rules that allow for the proper determination of the Claim;

7.8.4.3 A detailed cost estimate for any amount sought, including copies of any related invoices; and

7.8.4.4 A specific identification of the relief sought.

7.8.5 EXTENSION OF TIME TO SUBMIT DOCUMENTATION. The time period for submitting documentation and any analysis to support a Claim may be extended by the Director upon written request of the claimant showing just cause for such extension, which request must be included in the initial Claim submittal.

7.8.6 CONTRACTOR REQUIRED TO CONTINUE PERFORMANCE. Pending the final determination of the Claim, including any judicial review or appeal process, and unless otherwise agreed upon in writing by the Director, Contractor shall proceed diligently with performance of the Contract and DFCM shall continue to make payments of undisputed amounts in accordance with the Contract Documents.

7.8.7 AGREEMENT OF CLAIMANT ON METHOD AND PERSON(S) EVALUATING THE CLAIM. The Director shall first attempt to reach agreement with the claimant on the method and person(s) to evaluate the Claim. If such agreement cannot be made within fourteen (14) days of filing of the Claim, the Director shall select the method and person(s), considering the purposes described in Rule R23-26-1. Unless agreed to by the Director and the claimant, any selected person shall not have a conflict of interest or appearance of impropriety. Any party and the person(s) evaluating the Claim has a duty to promptly raise any circumstances regarding a conflict of interest or appearance of impropriety. If such a reasonable objection is raised, and unless otherwise agreed to by the Director and the claimant, the Director shall take appropriate action to eliminate the conflict of interest or appearance of impropriety. The dispute resolution methods and person(s) may include any of the following:

7.8.7.1 A single expert and/or hearing officer qualified in the field that is the subject of the Claim;

7.8.7.2 An expert panel, consisting of members that are qualified in a field that is the subject of the Claim;

7.8.7.3 An arbitration process which may be binding if agreed to by the parties to the Claim;

7.8.7.4 A mediator; or

7.8.7.5 Any other method that best accomplishes the purposes set forth in Rule R23-26-1.

7.8.8 THE EVALUATION PROCESS, TIMEFRAMES OF EVALUATOR(S), DIRECTOR'S DETERMINATION, ADMINISTRATIVE APPEAL TO THE EXECUTIVE DIRECTOR AND JUDICIAL REVIEW. The Claim shall be evaluated, the timeframe for specific events related to the person(s) evaluating the Claim, the Director's determination, any appeal to the Executive Director and any judicial review shall be subject to the provisions of Rule R23-26-5(8), R23-26-5(9), R23-26-6 and R23-26-8. A copy of these Administrative Rules is available at https://rules.utah.gov.

7.8.9 APPEAL PROCESS PREREQUISITE FOR FURTHER CONSIDERATION OR JUDICIAL REVIEW. The administrative appeal to the Executive Director is a prerequisite for any further consideration by the State of Utah, or to judicial review of the issue giving rise to the Claim. It shall be

considered that the Contractor, or another party brought into the process by DFCM, has not exhausted its administrative remedies if such an administrative appeal is not undertaken.

7.8.10 PAYMENT OF CLAIM.

7.8.10.1 When a stand-alone component of a Claim has received a final determination, and is no longer subject to review or appeal, that amount shall be paid in accordance with the payment provisions of the Contract Documents or judicial order.

7.8.10.2 When the entire Claim has received a final determination, and is no longer subject to review or appeal, the full amount shall be paid within fourteen (14) days of the date of the final determination unless the Work or services have not been completed, in which case the amount shall be paid in accordance with the payment provisions of the Contract Documents to the point that the Work is completed.

7.8.10.3 The final determination date is the earlier of the date upon which the claimant accepted the settlement in writing with an executed customary release document and waived its rights of appeal, or the expiration of the appeal period, with no appeal filed, or the determination made resulting from the final appeal.

7.8.10.4 Any final determination where DFCM is to pay additional monies to Contractor shall not be delayed by any appeal or request for judicial review by another party brought into the process by DFCM as being liable to DFCM.

7.8.10.5 Notwithstanding any other provision of the Contract Documents, payment of all or part of a Claim shall be subject to any set-off, claims, or counterclaims of DFCM.

7.8.10.6 Payment to Contractor for a Subcontractor issue (Claim) deemed filed by Contractor, shall be paid by Contractor to the Subcontractor in accordance with the subcontract between Contractor and the Subcontractor.

7.8.10.7 The execution of a customary release document by the claimant related to any payment may be required as a condition of making the payment. Unless expressly and specifically released in writing by DFCM, settlement of a Claim by DFCM shall not be deemed a waiver of Claims reserved under Section 8.8.3.

7.8.11 ALLOCATION OF COSTS OF CLAIM RESOLUTION PROCESS.

7.8.11.1 In order to file a Claim, a claimant must pay a Fifteen Hundred Dollar ($1,500.00.00) filing fee to DFCM. When the Claim is a pass-through from a Subcontractor in accordance with Section 7.7.5, the payment of the fee shall be made by the Subcontractor.

7.8.11.2 Unless otherwise agreed to by the parties to the Claim, the costs of resolving the Claim shall be allocated among the parties on the same proportionate basis as the determination of financial responsibility for the Claim.

7.8.11.3 The costs of resolving the Claim that are subject to allocation include the claimant's filing fee, the costs of any person(s) evaluating the Claim, the costs of making any required record of the process, and any additional testing or inspection procured to investigate and/or evaluate the Claim.

7.8.11.4 Each party shall be responsible for its own attorney fees.

7.8.12 ALTERNATIVE PROCEDURES. To the extent otherwise permitted by law, if all parties to a Claim agree in writing, a protocol for resolving a Claim may be used that differs from the process described in this Section 7.8.

7.8.13 IMPACT ON FUTURE SELECTIONS.

7.8.13.1 The presentation of a good faith and non-frivolous issue or Claim shall not be considered by DFCM in DFCM's selection process for a future award of contract; and

7.8.13.2 The submission of a bad faith and frivolous issue or Claim, or the failure by a Contractor to facilitate resolution of a Claim, may be considered in DFCM's evaluation of performance.

7.8.14* **DFCM'S RIGHT TO HAVE ISSUES, DISPUTES OR CLAIMS CONSIDERED.** As stated in Rule R23-26-1(6), Sections 7.7 and 7.8 do not limit the right of DFCM to have any of DFCM's issues, disputes or claims considered. DFCM reserves all rights to pursue DFCM's issues, disputes or claims in law or equity including, but not limited to, any or all of the following: damages, delay damages and impacts, losses, liability, patent or latent defects, or failure to perform under the Contract Documents. If the Director appoints an expert or a panel to consider any such issue(s), dispute(s) or claim(s) of DFCM, Contractor shall cooperate with such expert or panel process.

**The previous 'Section 7.8.14 REPORT TO THE BUILDING BOARD' has been removed as of 07122023.*
**The previous 'Section 7.8.15 DFCM'S RIGHT TO HAVE ISSUES, DISPUTES OR CLAIMS CONSIDERED' has been renumbered to Section 7.8.14 as of 07122023.*

ARTICLE 8. PAYMENTS AND COMPLETION.

8.1 SCHEDULE OF VALUES. With the first Application for Payment, Contractor shall submit to the A/E and DFCM a schedule of values allocated to all the various portions of the Work. The schedule of values shall be submitted on the form approved and provided by DFCM. The schedule of values must consist of a detailed and specific breakdown of values actually associated with the various items of Work and shall in no event be "frontloaded". The A/E shall make recommendations to DFCM regarding the schedule of values including any suggested modifications. When approved, including any approved modifications, by DFCM, it shall be the basis for future Contractor Applications for Payment. Contractor shall be entitled to reasonably reallocate values in the schedule of values with prior written notice to DFCM. Contractor shall not be entitled to payment until receipt and acceptance of the schedule of values.

8.2 APPLICATIONS FOR PAYMENT.

8.2.1 IN GENERAL. The following general requirements shall be met:

8.2.1.1 Contractor shall submit to the A/E an itemized Application for Payment for Work completed in accordance with the schedule of values and that reflects retainage as provided for in the Contractor's Agreement. The Application for Payment shall be on a form approved and provided by DFCM.

8.2.1.2 The Application for Payment shall be supported by such data substantiating Contractor's right to payment as DFCM or the A/E may require.

8.2.1.3 The Application for Payment may include requests for payment pursuant to approved Change Orders or Construction Change Directives.

8.2.1.4 The Application for Payment shall not include requests for payment for portions of the Work performed by a Subcontractor when Contractor does not intend to pay that Subcontractor because of a dispute or other reason.

8.2.1.5 In executing the Application for Payment, Contractor shall attest that Subcontractors involved with prior Applications for Payment have been paid, unless Contractor provides a detailed explanation why such

payment has not occurred. DFCM reserves the right to require Contractor to submit a Utah Conditional Waiver and Release Upon Progress Payment form from one or more Subcontractors.

8.2.2 PAYMENT FOR MATERIAL AND EQUIPMENT. Unless otherwise provided in the Contract Documents, payments shall be made on account of materials and equipment delivered and suitably stored at the Work site for subsequent incorporation into the Work. If approved in advance by DFCM and A/E, payment may similarly be made for materials and equipment suitably stored off-site at a location agreed upon in writing. Payment for materials and equipment stored on or off-site shall be conditioned upon compliance by Contractor with procedures satisfactory to DFCM to establish DFCM's title to such materials and equipment or otherwise protect DFCM's interest, and shall include applicable insurance, storage, and transportation to the Work site for such materials and equipment stored off-site. DFCM may require copies of invoices or other suitable documentation.

8.2.3 WARRANTY OF TITLE. Contractor warrants that title to all Work covered by an Application for Payment shall pass to DFCM no later than the time for payment. Contractor further warrants that upon submittal of an Application for Payment, all Work for which Certificates for Payment have been previously issued and payments received from DFCM shall, to the best of Contractor's knowledge, information, and belief, be free and clear of liens, claims, security interests, or encumbrances in favor of the Contractor, Subcontractors, or other persons or entities making a claim by reason of having provided labor, materials, and/or equipment relating to the Work.

8.2.4 HOLDBACK BY DFCM. Notwithstanding anything to the contrary contained in the Contract Documents, DFCM may, as a result of the claims resolution process, withhold any payment to Contractor if and for so long as Contractor fails to perform any of its obligations under the Contract Documents or otherwise is in default under any of the Contract Documents.

8.3 CERTIFICATES FOR PAYMENT.

8.3.1 ISSUED BY A/E. The A/E shall within seven (7) days after receipt of Contractor's Application for Payment, either issue to DFCM a Certificate for Payment, with a copy to the Contractor, for such amount as the A/E determines due or notify Contractor and DFCM in writing of the A/E's reasons for withholding certification in whole or in part as provided in Section 8.4.1. If the A/E fails to act within said seven (7) day period, Contractor may file the Application for Payment directly with DFCM and DFCM shall thereafter have twenty-one (21) days from the date of DFCM's receipt to resolve the amount to be paid and to pay the undisputed amount. The accuracy of Contractor's Applications for Payment shall be Contractor's responsibility, not A/E's.

8.3.2 A/E'S REPRESENTATIONS. The A/E's issuance of a Certificate for Payment shall constitute a representation to DFCM that to the best of the A/E's knowledge, information and belief, based upon the A/E's observations at the site, the data comprising the Application for Payment, and what is reasonably inferable from the observations and data, that the Work has progressed to the point indicated in the Application for Payment and that the quality of the Work is in accordance with the Contract Documents. The foregoing representations are subject to minor deviations from the Contract Documents correctable prior to completion and to specific qualifications expressed by the A/E. The issuance of a Certificate for Payment shall further constitute a representation that Contractor is entitled to payment in the amount certified. However, the issuance of a Certificate for Payment shall not be a representation that the A/E has: (1) made exhaustive or continuous on-site inspections to check the quality or quantity of the Work; (2) reviewed construction means, methods, techniques, sequences or procedures; (3) reviewed copies of requisitions received from Subcontractors and material suppliers and other data requested by DFCM to substantiate Contractor's right to payment; (4) ascertained how or for what purpose Contractor used money previously paid on account of Contract Price; or (5) any duty to make such inquiries.

8.4 DECISIONS TO WITHHOLD CERTIFICATION.

8.4.1 WHEN WITHHELD. The A/E may decide not to certify payment and may withhold a Certificate for Payment in whole or in part, to the extent reasonably necessary to protect DFCM, if in the A/E's judgment the representations to DFCM required in Section 8.3.2 cannot be made. If the A/E is unable to certify payment in the amount of the Application for Payment, the A/E shall notify Contractor and DFCM as provided in Section 8.3.1. If Contractor and the A/E cannot agree on a revised amount, the A/E shall promptly issue a Certificate for Payment for the amount to which the A/E makes such representations to DFCM. The A/E may also decide not to certify payment or, because of subsequently discovered evidence or observations, may nullify the whole or part of a Certificate for Payment previously issued, to such extent as may be necessary in the A/E's opinion to protect DFCM from loss because of:

8.4.1.1 Defective Work not remedied;

8.4.1.2 Third party claims filed or reasonable evidence indicating probable filing of such claims;

8.4.1.3 Failure of Contractor to make payments properly to Subcontractors or for labor, materials, or equipment;

8.4.1.4 Reasonable evidence that the Work cannot be completed for the unpaid balance of the Contract Price;

8.4.1.5 Damage to DFCM or another contractor;

8.4.1.6 Reasonable evidence that the Work will not be completed within the Contract Time, and that the unpaid balance of the Contract Price would not be adequate to cover actual or liquidated damages for the anticipated delay; or

8.4.1.7 Failure to carry out the Work in accordance with the Contract Documents.

8.4.2 CERTIFICATION ISSUED WHEN REASONS FOR WITHHOLDING REMOVED. When the reasons stated in Section 8.4.1 for withholding certification are removed, certification shall be made for such related amounts.

8.4.3 CONTINUE WORK EVEN IF CONTRACTOR DISPUTES A/E'S DETERMINATION. If Contractor disputes any determination by the A/E or the result of the claims resolution process with regard to any Certification of Payment, Contractor nevertheless shall expeditiously continue to prosecute the Work.

8.4.4 DFCM NOT IN BREACH. DFCM shall not be deemed to be in breach of Contractor's Agreement by reason of the withholding of any payment pursuant to any provision of the Contract Documents provided DFCM's action or such withholding is consistent with the results of the dispute resolution process.

8.5 PROGRESS PAYMENTS.

8.5.1 IN GENERAL, INTEREST OR LATE PAYMENTS.

8.5.1.1 Except as provided in Section 8.3.1, DFCM shall pay any undisputed amount within twenty-eight (28) days of the date that the Application for Payment was submitted to the A/E. In no event shall DFCM be required to pay any disputed amount.

8.5.1.2 Except as otherwise provided by law, if any payment is late based upon the provisions of the Contract Documents, Contractor shall be paid interest at the rate stated in Utah Code § 15-6-3.

8.5.2 CONTRACTOR AND SUBCONTRACTOR RESPONSIBILITY. Contractor shall promptly and no later than the date established in Utah Code § 15-6-5 pay each Subcontractor, upon receipt of payment from DFCM, out of the amount paid to Contractor on account of such Subcontractor's portion of the Work, the amount to which said Subcontractor is entitled. Contractor shall, by appropriate agreement with each Subcontractor, require each Subcontractor to make payment to its Sub-subcontractors in a similar manner.

8.5.3 INFORMATION FURNISHED BY A/E OR DFCM TO SUBCONTRACTOR. The A/E or DFCM shall, on request, furnish to a Subcontractor, if practicable, information regarding percentages of completion or amounts applied for by Contractor and action taken thereon by the A/E and DFCM on account of portions of the Work done by such Subcontractor.

8.5.4 DFCM AND A/E NOT LIABLE. Neither DFCM or A/E shall have an obligation to pay, monitor, or enforce the payment of money to a Subcontractor, except to the extent as may otherwise be required by law.

8.5.5 CERTIFICATE, PAYMENT OR USE NOT ACCEPTANCE OF DEFECTIVE WORK. A Certificate for Payment, a progress payment, or partial or entire use or occupancy of the Work by DFCM shall not constitute acceptance of Work that is not in accordance with the Contract Documents.

8.6 PAYMENT UPON SUBSTANTIAL COMPLETION. Upon Substantial Completion of the Work or designated portion thereof and upon application by Contractor and certification by the A/E, DFCM shall make payment, reflecting adjustment in retainage, if any, for such Work or portion thereof as provided in the Contract Documents. To the extent allowed by law, DFCM may retain until final completion up to twice the fair market value of the Work that has not been completed in accordance with the Contract Documents, or, in the absence of applicable Contract Documents, generally accepted craft standards.

8.7 PARTIAL OCCUPANCY OR USE.

8.7.1 IN GENERAL. DFCM may occupy or use any completed or partially completed portion of the Work at any stage when such portion is designated by separate agreement with Contractor and authorized by public authorities having jurisdiction over the Work. Such partial occupancy or use may commence whether or not the portion is Substantially Complete, provided DFCM and Contractor have accepted in writing the responsibilities assigned to each of them for payments, retainage if any, security, maintenance, heat, utilities, damage to the Work and insurance, and have agreed in writing concerning the period for correction of the Work and commencement of the warranties required by the Contract Documents. When Contractor considers a portion to be Substantially Complete, Contractor shall prepare and submit a list to the A/E as previously provided for herein. Consent of Contractor to partial occupancy or use shall not be unreasonably withheld. Contractor shall have continuing responsibility to protect the Work site and the Work during such partial occupancy or use and shall be responsible for damage except to the extent caused solely by DFCM during such partial occupancy or use. The stage of progress of the Work shall be determined by written agreement between DFCM and Contractor.

8.7.2 INSPECTION. Immediately prior to such partial occupancy or use, DFCM, Contractor and A/E shall jointly inspect the area to be occupied or portion of the Work to be used in order to determine and record the condition of the Work.

8.7.3 NOT CONSTITUTE ACCEPTANCE. Except to the extent it is agreed upon in writing by DFCM, partial occupancy or use of a portion of the Work shall not constitute acceptance of Work not complying with the requirements of the Contract Documents.

8.7.4 INSURANCE. Partial occupancy or use shall not commence until the insurance company or companies providing property insurance under Section 10.2 have provided any required consent to such partial

occupancy or use by endorsement or otherwise. DFCM shall take reasonable steps to obtain any required consent of the insurance company or companies and shall, without mutual written consent, take no action with respect to partial occupancy or use that would cause cancellation, lapse or reduction of insurance.

8.8 FINAL PAYMENT.

8.8.1 CERTIFICATE FOR PAYMENT. The A/E's final Certificate for Payment shall constitute a further representation that the conditions listed in Section 8.8.2 as precedent to Contractor's being entitled to final payment have been fulfilled.

8.8.2 CONDITIONS FOR FINAL PAYMENT. Neither final payment nor any remaining retained percentage shall become due until Contractor submits to the A/E the following to the extent required by DFCM:

8.8.2.1 An affidavit that payrolls, bills for material and equipment, and other indebtedness connected with the Work (less amounts withheld by DFCM) have been paid or otherwise satisfied;

8.8.2.2 A current or additional certificate evidencing that insurance required by the Contract Documents to remain in force after final payment is currently in effect and shall not be canceled or allowed to expire until at least twenty-eight (28) days prior written notice, by certified mail, return receipt requested, has been given to DFCM;

8.8.2.3 A written statement that Contractor knows of no reason that the insurance shall not be renewable to cover the period required by the Contract Documents;

8.8.2.4 If requested by the surety in a timely manner or by DFCM, consent of surety, to final payment;

8.8.2.5 Receipt of Record Drawings, Specifications, Addenda, Change Orders and other Modifications maintained at the site; the warranties, instructions, operation and maintenance manuals, and training videos required to be furnished by the Contract Documents;

8.8.2.6 Other data establishing payment or satisfaction of obligations, such as a Utah Waiver and Release Upon Final Payment form from Contractor, Subcontractors and Sub-subcontractors, receipts, other releases and waivers of liens, claims, security interests, or encumbrances arising out of Contractor's Agreement, to the extent and in such form as may be designated by DFCM. If a Subcontractor or Sub-subcontractor refuses to furnish a release or waiver required by DFCM, DFCM may require consent of surety to the final payment. If liens, claims, security interests, or encumbrances remain unsatisfied after payments are made, Contractor shall refund to DFCM all money that DFCM may be compelled to pay in discharging such liens, claims, security interests or encumbrances including all costs and reasonable attorney fees; and

8.8.2.7 A written statement demonstrating how Contractor shall distribute interest earned on retention to Subcontractors as required by Utah Code § 13-8-5.

8.8.3 WAIVER OF CLAIMS: FINAL PAYMENT. The making of final payment shall constitute a waiver of Claims by DFCM, except those arising from:

8.8.3.1 Liens, Claims, security interests, or encumbrances arising out of the Contract Documents and unsettled;

8.8.3.2 Failure of the Work to comply with the requirements of the Contract Documents;

8.8.3.3 Terms of warranties required by the Contract Documents; or

8.8.3.4 Claims arising within the one-year period for correction of the Work and Claims to the extent not barred by Utah Code § 78B-2-225 and/or Utah Code § 78B-4-513.

8.8.4 DELAYS NOT CONTRACTOR'S FAULT. If, after Substantial Completion of the Work, Final Completion is materially delayed through no fault of Contractor or by issuance of Change Orders affecting final completion, DFCM shall, upon application by Contractor and certification by the A/E, and without terminating Contractor's Agreement, make payment of the balance due for that portion of the Work fully completed and accepted. Such payment shall be made under terms and conditions governing final payment. Unless otherwise stated by DFCM in writing, the making of final payment shall constitute a waiver of claims by DFCM as provided in Section 8.8.3 for that portion of that Work fully completed and accepted by DFCM.

8.8.5 WAIVER BY ACCEPTING FINAL PAYMENT. Acceptance of final payment by Contractor or a Subcontractor shall constitute a waiver of Claims by that payee except those Claims previously made in writing and identified by that payee as unsettled at the time of final Application for Payment.

ARTICLE 9. TESTS AND INSPECTIONS, SUBSTANTIAL AND FINAL COMPLETION, UNCOVERING, CORRECTION OF WORK AND GUARANTY PERIOD.

9.1 TESTS AND INSPECTIONS.

9.1.1 IN GENERAL. Tests, inspections, and approvals of portions of the Work required by the Contract Documents or by laws, rules, regulations, or orders of public authorities having jurisdiction shall be made at an appropriate time. Unless otherwise specifically set forth in the Contract Documents or agreed to by DFCM in writing, DFCM shall contract for such tests, inspections, and approvals with an independent entity, or with the appropriate public authority, and DFCM shall bear all related costs of tests, inspections, and approvals, except as provided below. If any of the Work is required to be inspected or approved by the terms of the Contract Documents or by any public authority, Contractor shall, at least two (2) working days prior to the time of the desired inspection, and following the procedures established by DFCM, request such inspection or approval to be performed. Contractor shall give the A/E timely notice of when and where tests and inspections are to be made so that the A/E may observe such procedures.

9.1.2 FAILURE OF AN INSPECTOR TO APPEAR. Work shall not proceed without any required inspection and the associated authorization by DFCM to proceed unless the following procedures and requirements have been met:

9.1.2.1 The inspection or approval was requested in a timely manner as provided in Section 9.1.1;

9.1.2.2 Contractor received written confirmation from the inspection entity that the inspection was scheduled;

9.1.2.3 Contractor has contacted or attempted to contact the inspector to confirm whether the inspector is able to perform the inspection as scheduled;

9.1.2.4 If the inspector informs Contractor that the inspector is unable to perform the inspection as scheduled or if Contractor is unable to contact the inspector, Contractor shall attempt to contact the A/E or DFCM for instruction; and

9.1.2.5 Contractor has documented the condition of the Work prior to being covered through photos or other means.

9.1.3 NONCONFORMING WORK. If procedures for testing, inspection, or approval under Section 9.1.1 reveal failure of portions of the Work to comply with the requirements established by the Contract

Documents, Contractor shall bear all costs made necessary by such failure including those of repeated procedures and compensation for DFCM's expenses, including the cost of retesting for verification of compliance if necessary, until DFCM accepts the Work in question as complying with the requirements of the Contract Documents.

9.1.4 CERTIFICATES. Required certificates of testing, inspection, or approval shall, unless otherwise required by the Contract Documents, be secured by Contractor and promptly delivered to the A/E.

9.1.5 A/E OBSERVING. If the A/E is to observe tests, inspections, or approvals required by the Contract Documents, the A/E shall do so with reasonable promptness and, where practicable, at the normal place of testing.

9.1.6 PROMPTNESS. Tests, inspections, and arrangements for approvals conducted pursuant to the Contract Documents shall be made promptly to avoid delay in the Work.

9.2 UNCOVERING OF WORK.

9.2.1 UNCOVER UNINSPECTED WORK. Except as provided in Section 9.2.3, if a portion of the Work is covered prior to an inspector's approval to proceed, it must be uncovered for the inspector's inspection and be replaced at Contractor's expense without change in the Contract Price and/or Contract Time.

9.2.2 OBSERVATION PRIOR TO COVERING. Except as provided in Section 9.2.3, if DFCM or the A/E has requested in writing to observe conditions prior to any Work being covered or if such observation is required by the Contract Documents, and the Work is covered without such observation, Contractor shall be required to uncover and appropriately replace the Work at Contractor's expense without change in the Contract Price and/or Contract Time. If Contractor requests an inspection and DFCM or the A/E, including any inspector of each, does not appear, Contractor shall immediately notify DFCM of such failure to appear, but shall not cover the Work without such inspection.

9.2.3 WHEN AN INSPECTOR FAILS TO APPEAR OR A/E OR DFCM DID NOT MAKE PRIOR REQUEST. If Work is performed by Contractor without an inspection as provided in Section 9.1.2 or if a portion of the Work has been covered which the A/E or DFCM has not specifically requested to observe prior to its being covered or such observation is not required by the Contract Documents, the A/E or DFCM may request to see such Work and it shall be uncovered by Contractor. If such Work is in accordance with the Contract Documents, costs of uncovering and replacement, shall, by appropriate Change Order, be charged to DFCM. If such Work is not in accordance with the Contract Documents, Contractor shall pay such costs unless the condition was caused by DFCM or a separate contractor in which event DFCM shall be responsible for payment of such costs.

9.3 INSPECTIONS: SUBSTANTIAL AND FINAL.

9.3.1 SUBSTANTIAL COMPLETION INSPECTION. Prior to requesting a Substantial Completion inspection, Contractor shall prepare a comprehensive initial punchlist, including unresolved items from prior inspections, for review by DFCM and the A/E to determine if the Work is ready for a Substantial Completion inspection. If DFCM and A/E determine that the initial punchlist indicates that the Work is not Substantially Complete, the initial punchlist shall be returned to Contractor with written comments. If DFCM and A/E determines that the initial punchlist indicates that the Work may be Substantially Complete, the A/E shall promptly organize and perform a Substantial Completion inspection in the presence of DFCM and all appropriate authorities.

9.3.1.1 If the A/E reasonably determines that the initial punchlist prepared by Contractor substantially understates the amount of the Work remaining to be completed and the Work is not Substantially Complete, the A/E shall report this promptly to DFCM, and upon concurrence of DFCM, Contractor shall be assessed the costs of the inspection and punchlist review incurred by the A/E and DFCM.

9.3.1.2 When the Work or designated portion thereof is Substantially Complete, the A/E shall prepare a Certificate of Substantial Completion which shall establish the date of Substantial Completion; shall establish responsibilities of DFCM and Contractor for security, maintenance, heat, utilities, damage to the Work, and insurance; and shall fix the time within which Contractor shall finish all items on the punchlist accompanying the Certificate ("Punchlist Completion Date"). The Certificate of Substantial Completion shall require approval by DFCM. If there is a punchlist, Contractor shall proceed promptly to complete and correct items on the punchlist. Failure to include an item on the punchlist does not alter the responsibility of Contractor to complete all Work in accordance with the Contract Documents.

9.3.1.3 Warranties required by the Contract Documents shall commence on the date of Substantial Completion of the Work or designated portion thereof except to the extent as provided otherwise in the Contract Documents or if such warranty is related to an item where the Work is not complete. Written warranties shall state the length of the warranty, which must comply with the Contract Documents.

9.3.1.4 The Certificate of Substantial Completion shall be submitted by the A/E to DFCM and Contractor for their written acceptance of responsibilities assigned to them in such Certificate.

9.3.1.5 Except to the extent DFCM otherwise approves in advance and in writing, Contractor shall submit the following documents in order to achieve Substantial Completion: written warranties, guarantees, operation and maintenance manuals, and all complete as-built drawings. Contractor shall also provide or obtain any required approvals for occupancy. Contractor shall be responsible for the guaranty of all Work, whether performed by it or by its Subcontractors and Sub-subcontractors at any tier.

9.3.2 FINAL COMPLETION INSPECTION. Prior to requesting a final inspection, Contractor shall verify all punchlist items are corrected and completed. Once all punchlist items are corrected and completed, Contractor shall notify DFCM and request a final inspection. DFCM shall notify the A/E and perform a final inspection. When all punchlist items are completed, a final Application for Payment shall be provided by Contractor, certified by the A/E, and processed by DFCM.

9.3.3 PUNCHLIST COMPLETION. As compensation to DFCM for administrative costs incurred by DFCM as a result of delay in final project close-out, for each day subsequent to the Punchlist Completion Date that Contractor fails to complete the punchlist and subject to Section 8.8.4, Contractor shall pay to DFCM five percent (5%) of the liquidated damages amount stated in the Contractor's Agreement.

9.4 CORRECTION OF WORK AND GUARANTY PERIOD.

9.4.1 CONTRACTOR CORRECT THE WORK. Contractor shall correct Work rejected by the A/E, an inspector or DFCM, or failing to conform to the requirements of the Contract Documents, whether observed before or after Substantial Completion and whether or not fabricated, installed or completed. Contractor shall bear the costs of correcting such rejected Work, including additional testing and inspections and compensation for the A/E's and inspector's services and expenses made necessary thereby.

9.4.2 GUARANTY AND CORRECTION AFTER SUBSTANTIAL COMPLETION. If within one year after the date of Substantial Completion of the Work or designated portion thereof, or after the date for commencement of warranties established under Section 9.2.1 or by terms of an applicable special warranty or guaranty required by the Contract Documents, any of the Work is found not to be in accordance with the requirements of the Contract Documents, including failure to perform for its intended purpose, Contractor shall correct it promptly after receipt of written notice from DFCM to do so, unless DFCM has previously given Contractor a written acceptance of such condition. The period of one year shall be extended with respect to portions of the Work first performed after Substantial Completion by the period of time between Substantial Completion and the actual performance of the Work. This obligation of Contractor under this Section 9.4.2 shall be operative notwithstanding the acceptance of the Work under the Contract Documents, the issuance of a final certificate of payment, partial or total occupancy and/or termination of Contractor's Agreement. DFCM shall give notice of observed defects with reasonable promptness; however, failure to give such notice shall not relieve Contractor of its obligation to correct the Work. All corrected Work shall be subject to a one-year guaranty period the same in all respects as the original Work, except that such guaranty period shall commence from the time of Substantial Completion of the corrected Work. This guaranty period does not affect DFCM's right to pursue any available remedies against Contractor, including, but not limited to, DFCM's right to pursue a cause of action for defective construction against Contractor within the time period established by Utah Code § 78B-2-225.

9.4.3 REMOVAL OF WORK.

9.4.3.1 Contractor shall promptly remove from the Work site all Work that DFCM and/or the A/E determines as being in nonconformance with the Contract Documents, whether incorporated or not.

9.4.3.2 Contractor shall promptly replace and re-execute any Work not in accordance with the Contract Documents without change in the Contract Price and/or Contract Time.

9.4.3.3 Contractor shall bear the expense of correcting destroyed or damaged construction, whether completed or partially completed, by DFCM or separate contractors destroyed or damaged by such removal or replacement.

9.4.3.4 If Contractor does not remove such rejected Work within a reasonable time, fixed by written notice, DFCM may have the Work removed and stored at the expense of Contractor.

9.4.3.5 If Contractor does not correct the nonconforming Work within a reasonable time, fixed by written notice, DFCM may correct it in accordance with Section 2.2.2 of these General Conditions.

9.4.4 NOT LIMIT OTHER OBLIGATIONS. Nothing contained in this Section 9.4 shall be construed to establish a period of limitation with respect to other obligations that Contractor may have under the Contract Documents. Establishment of the time period of one year as described in Section 9.4.2 relates only to the specific obligation of Contractor to correct the Work, and has no relationship to the time within which the obligation to comply with the Contract Documents may be sought to be enforced, nor to the time within which proceedings may be commenced to establish Contractor's liability with respect to Contractor's obligations other than specifically to correct the Work.

9.5 ADDITIONAL WARRANTIES.

9.5.1 IN GENERAL. In addition to any other provisions of this Article 9, the following warranties shall apply:

9.5.1.1 Contractor warrants to DFCM that materials and equipment furnished under the Contract Documents shall be of good quality and new, except to the extent otherwise required or expressly permitted by the Contract Documents.

9.5.1.2 Contractor also warrants to DFCM that the Work shall be free from defects not inherent in the quality required or expressly permitted and that the Work shall conform with the requirements of the Contract Documents. Work not conforming to said requirements, including substitutions not implemented by Change Order, Construction Change Directive, or ASI as provided in Article 7, may be considered defective at DFCM's option.

9.5.2 EXCLUSION. Unless due to the negligent or intentional act or omission of Contractor or those under the Contractor's control, or as otherwise stated in the Contract Documents, Contractor's guaranty excludes remedy for damage or defect caused by abuse, modifications not executed by Contractor, improper or insufficient maintenance, improper operation, or normal wear and tear under normal usage.

9.5.3 FURNISH EVIDENCE ON REQUEST. If requested by the A/E or DFCM, Contractor shall furnish satisfactory evidence as to the type and quality of materials and equipment.

9.6 ACCEPTANCE OF NONCONFORMING WORK. If DFCM prefers to accept Work that is not in accordance with the requirements of the Contract Documents, DFCM may do so in writing instead of requiring its removal and correction, in which case the Contract Price shall be reduced as appropriate. Such adjustment shall be effectuated whether or not final payment has been made.

ARTICLE 10. INSURANCE AND BONDS.

10.1 CONTRACTOR'S LIABILITY INSURANCE.

10.1.1 IN GENERAL. The Contractor shall purchase and maintain in a company or companies lawfully authorized to do business in the State of Utah such insurance as will protect the Contractor from claims set forth below which may arise out of or result from the Contractor's operations and completed operations under the Contract and for which Contractor may be legally liable, whether such operations be by the Contractor or by a Subcontractor or by a Sub-subcontractor or anyone directly employed by them, or by anyone for whose acts they may be liable:

10.1.1.1 Claims under workers' compensation, disability benefit and other similar employee benefit acts that are applicable to the Work to be performed;

10.1.1.2 Claims for damages because of bodily injury, occupational sickness or disease, or death of the Contractor's employees;

10.1.1.3 Claims for damages because of bodily injury, sickness or disease, or death of any person other than the Contractor's employees;

10.1.1.4 Claims for damages insured by usual personal injury liability coverage;

10.1.1.5 Claims for damages, other than to the Work itself, because of injury to or destruction of tangible property, including loss of use resulting therefrom;

10.1.1.6 Claims for damages because of bodily injury, death of a person or property damage arising out of ownership, maintenance or use of a motor vehicle;

10.1.1.7 Claims for bodily injury or property damage arising out of completed operations;

10.1.1.8 Claims involving contractual liability insurance applicable to the Contractor's obligations under Section 4.12; and

10.1.1.9 If the Contract Documents require the Contractor to provide and/or the Contractor provides professional services, claims for damages because of negligent errors or omissions in the performance of professional services.

10.1.2 COVERAGE. Without limiting Contractor's obligations or liabilities hereunder, the Contractor shall, at its sole expense, purchase and maintain the following insurance coverages required by Section 10.1.1 of these General Conditions from insurers authorized to do business in the state of Utah and rated "A-" or better with a financial size category of class VII or larger by the A.M. Best Company. The following insurance coverages required by Section 10.1.1 of these General Conditions shall be procured with the following terms and insurance limits unless otherwise agreed in writing by DFCM and the Contractor:

10.1.2.1 Commercial General Liability Insurance covering all liabilities for personal injury and property damage arising in connection with the Work, with limits of liability of Five Million Dollars ($5,000,000.00) per each occurrence and in the aggregate.

10.1.2.2 Workers Compensation Insurance in compliance with all applicable laws of each jurisdiction in which the Work will be performed.

10.1.2.3 Employers Liability Insurance covering all liabilities for personal injuries of the Contractor's employees, with limits of liability of Five Million Dollars ($5,000,000.00) for each occurrence and in the aggregate.

10.1.2.4 If the Contract Documents require the Contractor to provide and/or the Contractor provides professional services, Professional Liability Insurance with limits of liability of Two Million Dollars ($2,000,000.00) for each claim and in the aggregate with a retroactive or effective date not later than the effective date of the Contractor's Agreement and with a deductible or self-insured retention of not greater than One Hundred Thousand Dollars ($100,000.00) per claim.

10.1.2.5 Automobile Liability Insurance, including coverages of owned, non-owned and hired vehicles covering all liabilities for personal injury and property damage arising from the use of motor vehicles, with combined single limits of liability of Two Million Dollars ($2,000,000.00) for each occurrence and in the aggregate.

10.1.2.6 If the Contractor is unable to obtain the insurance required by this Section 10.1, Contractor may carry excess liability insurance and/or umbrella insurance that, when combined with Contractor's primary coverage in a given category of insurance, brings the total coverage in such category to be not less than the amount required by this Section 10.1 for that category of insurance.

10.1.3 ENDORSEMENTS. The Contractor shall provide the following coverage endorsements for each category of insurance required by this Section 10.1, except in the case of Workers' Compensation Insurance, Employers' Liability Insurance and Professional Liability Insurance:

10.1.3.1 An endorsement including DFCM as an additional insured;

10.1.3.2 An endorsement including a cross liability clause, noting that each of the parties comprising the insured shall be considered as a separate entity, the insurance applies as if a separate policy has been issued to each party, and no "insured-versus-insured" exclusion exists in the policy.

10.1.3.3 An endorsement waiving all expressed or implied rights of subrogation against DFCM and the State of Utah.

10.1.4 TERMS. Except as otherwise expressly provided in Section 10.1.2, the insurance of the Contractor required to be maintained pursuant to this Section 10.1 shall be on the following terms:

10.1.4.1 All insurance shall begin no later than the effective date of the Contractor's Agreement and shall continue until the final completion of the Work and for a period of two (2) years following the final completion of the Work, provided, however, if the Contractor's Agreement is terminated prior to the final completion of the Work, such insurance shall continue for a period of two (2) years following the termination of the Contractor's Agreement.

10.1.4.2 Before performing any of the Work and after each time the policies are renewed or varied, the Contractor shall provide to DFCM certificates of insurance and endorsements consistent with this Section 10.1.4 and Sections 10.1.1, 10.1.2 and 10.1.3 of these General Conditions. If required by DFCM the Contractor shall deliver copies of the insurance policies providing the insurance coverages required by this Section 10.1, and all endorsements thereto.

10.1.4.3 All insurance shall not be varied to the detriment of DFCM, cancelled or allowed to lapse until thirty (30) days' prior written notice has been given to DFCM.

10.1.5 FAILURE TO PROVIDE. Should the Contractor at any time neglect or refuse to provide the insurance required by this Section 10.1, or should such insurance be canceled, DFCM shall have the right, but not the obligation, to procure the same at the cost and expense of the Contractor, and the cost thereof may be deducted by DFCM from any monies then due or thereafter to become due to the Contractor. If DFCM or the other Indemnified Parties are damaged by the failure of the Contractor to purchase or maintain insurance as required by this Section 10.1, the Contractor shall bear all reasonable costs, expenses and damages incurred by DFCM and/or the other Indemnified Parties arising from such failure to purchase or maintain the insurance required by this Section 10.1.

10.1.6 CERTIFICATES. The acceptance of delivery of any Certificates of Insurance or copies of insurance policies required to be purchased and maintained pursuant to the Contract Documents does not constitute approval or agreement by the recipient that the insurance requirements have been met or that those Certificates of Insurance or insurance policies comply with the Contract Documents.

10.1.7 NO LIMITATION. The Contractor shall procure such insurance coverages and such insurance limits for its insurance coverages that the Contractor, in its sole discretion, after consultation with its insurance and risk advisors, determines to be sufficient for Contractor's purposes given the risks of the project. This Section 10.1 sets forth DFCM's minimum insurance requirements; the Contractor may procure additional or broader insurance coverages or greater insurance limits than required by Section 10.1 at Contractor's expense. Nothing in Section 10.1 or elsewhere in the Contract Documents is intended to limit the Contractor's liability to DFCM or the Indemnified Parties to liabilities covered by the insurance coverages required by Section 10.1 or to the minimum insurance limits required of such insurance coverages by Section 10.1.

10.2 "BUILDER'S RISK" INSURANCE.

10.2.1 IN GENERAL. Provided that the Contractor's Agreement is for new buildings, structures, or construction projects, or for the alteration or repair of, or addition to existing buildings, structures, or improvements (an "Eligible Project"), DFCM shall maintain insurance to protect the interest of the Contractor, Subcontractors, or Sub-subcontractors subject to all of the terms, conditions, limitations, exclusions, waivers and/or endorsements stated in the Commercial Property Policy Declarations and Scheduled Forms available on DFCM's website, dfcm.utah.gov ("Builder's Risk Insurance").

10.2.2 DEDUCTIBLE. To the extent that the Builder's Risk Insurance provides for a deductible (including, without limitation, a specific loss deductible, cumulative loss deductible and/or sub-deductible), with respect to any damages or losses to property covered by the Builder's Risk Insurance caused in whole or in part by the negligence, breach of contractual duty or other fault of DFCM (or those for whom DFCM is responsible, including the A/E and the A/E's consultants) or the Contractor (or those for whom the Contractor is responsible, including the Contractor's Subcontractors and Sub-subcontractors of any tier), any deductible applicable to such covered damages or losses to property shall be paid by the party, whether DFCM or the Contractor, legally responsible for the negligence, breach of contractual duty or other fault that caused the losses or damages. If both DFCM and the Contractor are legally responsible in part for the negligence, breach of contractual duty or other fault that caused such losses or damages to property, DFCM and the Contractor shall pay any deductible applicable to such covered damages or losses to property in proportion to their comparative fault. With respect to any damages or losses to property covered by the Builder's Risk Insurance caused by an act of nature, such as the weather or other natural disasters, and not caused in whole or in part by the negligence, breach of contractual duty or other fault of DFCM (or those for whom DFCM is responsible, including the A/E and the A/E's consultants) or the Contractor (or those for whom the Contractor is responsible, including the Contractor's Subcontractors and Sub-subcontractors of any tier), DFCM and Contractor shall each pay half of the amount of any deductible to such covered damages or losses to property.

10.2.3 WAIVER OF SUBROGATION. DFCM and Contractor waive all rights against: (1) each other and the other Indemnified Parties and any of their subcontractors, sub-subcontractors, agents and employees, each of the other; and (2) the A/E, A/E's consultants, separate contractors described in Section 2.2, if any, and any of their subcontractors, sub-subcontractors, agents and employees, for damages caused by fire or other causes of loss to the extent covered by Builder's Risk Insurance obtained pursuant to Section 10.2.1 and maintained during the course of construction, but only to the extent of the actual recovery of insurance proceeds by the injured party, except such rights as they have to proceeds of such insurance held by DFCM as fiduciary. DFCM or Contractor, as appropriate, shall require of the A/E, A/E's consultants, separate contractors described in Section 2.2, if any, and the subcontractors, sub-subcontractors, agents and employees of any of them, by appropriate agreements, written where legally required for validity, similar waivers each in favor of other parties enumerated herein. The policies shall provide such waivers of subrogation by endorsement or otherwise. A waiver of subrogation shall be effective as to a person or entity even though that person or entity would otherwise have a duty of indemnification, contractual or otherwise, did not pay the insurance premium directly or indirectly, and whether or not the person or entity had an insurable interest in the property damaged. The waiver of rights under this Section 10.2.3 shall not include: (1) subject to Section 10.2.2, the right to recover amounts deducted or excluded from the insurance proceeds in the form of deductibles paid by the injured party; and (2) claims arising out of design errors or omissions.

10.2.4 SPECIAL HAZARDS. If the Contractor's Agreement is for an Eligible Project, but Contractor desires insurance coverage for risks other than those covered by the Builder's Risk Insurance, the Contractor may obtain such insurance, however, the cost thereof shall be borne by the Contractor and shall not be included in the Contract Price.

10.2.5 NON-ELIGIBLE PROJECTS. If the Contractor's Agreement is not for an Eligible Project, Contractor shall bear the risk of damage and/or loss to Contractor's materials, equipment and other property,

until acceptance of the Work by DFCM in writing, and no protection from damage and/or loss of the Work (including, without limitation, so called "builders risk", "course of construction", "inland marine" and/or similar property insurance) will be provided by DFCM for the protection of Contractor. Contractor may obtain insurance to cover such risks, however, the cost thereof shall be borne by the Contractor and shall not be included in the Contract Price. Section 10.2.3 shall not apply to Non-Eligible Projects.

10.3 PERFORMANCE BOND AND PAYMENT BOND. The Contractor shall furnish a Performance and Payment Bond naming the Contractor as Principal and DFCM and DFCM's designees as Obligees written on AIA Document A312 (2010) Performance Bond and Labor and Material Payment Bond forms in a penal sum of not less than the Contract Price for the Work as the Contract Price may be modified by Change Order (the "Bonds"). The cost of the Bonds, without mark-up, may be included in the Contract Price. The Contractor shall deliver the Bonds to DFCM at least three (3) days before the commencement of any Work at the Work site. Delivery of the Bonds may be accomplished *via* email. The Bonds shall be procured from a surety authorized to do business in the State of Utah and rated A- or better by the A.M. Best Company at the time of issuance of the Bonds and holding Certificates of Authority as an acceptable surety on federal bonds as listed by the United States Department of Treasury (Circular 570, as amended) in its most recent list at the time of issuance of the Bonds. The penal sum of the Bonds shall be within the maximum specified for such surety in Circular 570, as amended. The attorney-in-fact who executes the Bonds on behalf of the surety shall affix to the Bonds a certified and current copy of his or her power of attorney. If the surety on any of the Bonds furnished by the Contractor is declared a bankrupt or becomes insolvent or its rights to do business are terminated in the State of Utah or it ceases to meet the requirements of this Section 10.3, the Contractor shall within ten (10) calendar days thereafter substitute another bond and surety, both of which must be acceptable to DFCM. Upon the request of any person or entity appearing to be a potential beneficiary of bonds covering payment of obligations arising under the Contract, the Contractor shall promptly furnish a copy of the bonds or shall authorize a copy to be furnished.

ARTICLE 11. MISCELLANEOUS PROVISIONS.

11.1 A/E'S RESPONSIBILITIES. These General Conditions are not intended to provide an exhaustive or complete list of the A/E's responsibilities. A separate agreement between DFCM and the A/E incorporates these General Conditions by reference and includes additional design and contract administration responsibilities.

11.2 SUCCESSORS AND ASSIGNS. DFCM and Contractor respectively bind themselves, their partners, successors, assigns and legal representatives to the other party hereto and to partners, successors, assigns and legal representatives of such other party in respect to covenants, agreements and obligations contained in the Contract Documents. Contractor shall not assign Contractor's Agreement without the prior written consent of DFCM, nor shall Contractor assign any amount due or to become due or any of Contractor's rights under the Contract Documents, without prior written consent of DFCM.

11.3 WRITTEN NOTICE.

11.3.1 PERSONAL DELIVERY AND REGISTERED OR CERTIFIED MAIL. Written notice shall be deemed to have been duly served if delivered in person to the individual or a member of the firm or entity or to an officer of the corporation for which it was intended, or if delivered at or sent by registered or certified mail, return receipt requested, to the last business address known to the party giving notice.

11.3.2 E-MAIL. Notwithstanding any other provision of these General Conditions, written notice shall also be deemed to have been duly served by verified use of an e-mail system by using the known and operative e-mail address of the intended recipient. Service by use of the e-mail system is encouraged when timely notice shall benefit DFCM, the A/E, or Contractor. Notice shall be considered complete and verified upon the sending and confirmation of delivery using the e-mail system, if on the same day notice is also sent by registered or

certified mail, return receipt requested, to the last business address known to the party giving notice, confirming the e-mail delivery.

11.4 RIGHTS AND REMEDIES.

11.4.1 NOT LIMIT. Duties and obligations imposed by the Contract Documents and rights and remedies available thereunder shall be in addition to and not a limitation of duties, obligations, rights, and remedies otherwise imposed or available by law.

11.4.2 NO WAIVER. Except as expressly provided elsewhere in the Contract Documents, no action or failure to act by DFCM, the A/E, or Contractor shall constitute a waiver of a right or duty afforded them under the Contract Documents, nor shall such action or failure to act constitute approval or acquiescence in a breach thereunder, except as any of the above may be specifically agreed to in writing. In no case shall Contractor or any Subcontractors be entitled to rely upon any waiver of any of these General Conditions, unless agreed to in writing by DFCM.

11.5 NO DISCRIMINATION, NO SEXUAL HARASSMENT. Pursuant to the laws of the United States and the State of Utah, Contractor, Subcontractors, or anyone for whose act any of them may be liable, shall take affirmative action to not discriminate against any employee or applicant for employment because of race, creed, color, sex, religion, ancestry or national origin. To the extent applicable, said persons shall comply with all provisions of Executive Order No. 11246 dated September 24, 1965 and rules, regulations, orders, instructions, designations and other directives promulgated pursuant thereto. Contractor, Subcontractors, or anyone for whose act any of them may be liable, shall not act in any manner as would violate the laws, regulations, and policies of the United States or the State of Utah prohibiting sexual harassment.

11.6 APPLICABLE LAWS AND ENFORCEMENT. The Contract Documents shall be governed by and construed in accordance with the laws of the State of Utah, excluding any choice of law provisions that would otherwise require application of laws of any other jurisdiction.

11.7 INTERPRETATION. In the interest of brevity, the Contract Documents frequently omit modifying words such as “all” and “any” and articles such as “the” and “an”, but the fact that a modification or an article is absent from one statement and appears in another is not intended to affect the interpretation of either statement.

11.8 VENUE. In case of any dispute that may arise under the Contract Documents, the place of venue shall be in the County of Salt Lake, State of Utah, unless otherwise agreed to by all of the parties in writing.

11.9 SEVERABILITY. The invalidity of any provision or part of a provision of the Contract Documents shall not impair or affect in any manner the validity, enforceability, or effect of the remainder of the Contract Documents.

11.10 CONSTRUCTION OF WORDS. Unless otherwise stated in the Contract Documents, words which have well-known technical or construction industry meanings shall be construed as having such recognized meanings. Unless the context requires otherwise, all other technical words shall be construed in accordance with the meaning normally established by the particular, applicable profession or industry. All other words, unless the context requires otherwise, shall be construed with an ordinary, plain meaning.

11.11 NO THIRD-PARTY RIGHTS. These General Conditions create rights and duties only as between DFCM and Contractor, and DFCM and A/E. Nothing contained herein shall be deemed as creating third party beneficiary contract rights or other actionable rights or duties as between Contractor and A/E, or as between DFCM, Contractor, or A/E on the one hand, and any other person or entity.

ARTICLE 12. TERMINATION OR SUSPENSION OF THE CONTRACT.

12.1 TERMINATION BY CONTRACTOR FOR CAUSE.

12.1.1 IN GENERAL. If the Work is stopped for a period of sixty (60) days through no act or fault of the Contractor or a Subcontractor, or their agents or employees or any other persons performing portions of the Work under contract with any of the above, the Contractor may terminate the Contractor's Agreement in accordance with Section 12.1.2 for any of the following reasons:

12.1.1.1 Because DFCM has persistently failed to fulfill material obligations of DFCM under the Contract Documents with respect to matters important to the progress of the Work;

12.1.1.2 Issuance of an order of a court or other public authority having jurisdiction which necessitates such termination, except that where the Contractor has standing, the Contractor must cooperate in efforts to stay and/or appeal such order;

12.1.1.3 An act of government, such as a declaration of national emergency, making material unavailable; or

12.1.1.4 Unavoidable casualties or other similar causes.

12.1.2 NOTICE. If one of the reasons for termination in Section 12.1.1 exists, the Contractor may, upon fourteen (14) additional days' written notice to DFCM and A/E, and such condition giving cause for termination still not cured, terminate Contractor's Agreement and recover from DFCM payment for Work properly executed as of the date of termination, including profit and overhead on Work properly completed as of the date of termination, on a percentage completion basis, along with Contractor's reasonable demobilization expenses incurred within seven (7) days of termination, but Contractor shall in no event be entitled to recover consequential damages as a result of such termination or profit and/or overhead on the Work not executed.

12.2 TERMINATION BY DFCM FOR CAUSE.

12.2.1 IN GENERAL. DFCM may terminate the Contractor's Agreement if Contractor fails to cure any of the following within a period of seven (7) days (or longer if DFCM so approves in writing) after receipt of notice from DFCM specifying the breach or failure:

12.2.1.1 Contractor refuses or fails to supply enough properly skilled workers or proper materials;

12.2.1.2 Contractor fails to make payment to Subcontractors for materials, equipment, or labor;

12.2.1.3 Contractor disregards laws, ordinances, rules, regulations, or orders of a public authority having jurisdiction;

12.2.1.4 Contractor fails to perform the Work such that the Work will be Substantially Completed within the Contract Time or Contractor fails to make progress with the Work as required by the Contract Documents;

12.2.1.5 Contractor fails to perform the Work in accordance with the Contract Documents or is otherwise in breach of a material provision of the Contract Documents;

12.2.1.6 As permissible by law for a reason to terminate, Contractor is adjudged bankrupt;

12.2.1.7 As permissible by law for a reason to terminate, Contractor should make a general assignment for the benefit of creditors;

12.2.1.8 As permissible by law for a reason to terminate, Contractor should have a receiver appointed on account of Contractor's insolvency; or

12.2.1.9 Contractor fails to follow safety requirements and precautions either as expressly provided in the Contract Documents or as consistent with the customary practices in the industry.

12.2.2 DFCM'S RIGHT TO CARRY OUT THE WORK UPON TERMINATION FOR CAUSE. If Contractor fails to remedy the breach or failure within seven (7) days or other mutually agreed period after notice from DFCM, DFCM may, without prejudice to other remedies available to DFCM and in addition to enforcement of any other of DFCM's rights, terminate the Contractor's Agreement, take possession of the Work site and all materials, finish the Work by whatever reasonable method DFCM may deem expedient, and charge Contractor, or file a claim against Contractor's bankruptcy estate, for any additional costs incurred by DFCM to complete the Work. Contractor shall not be entitled to receive any further payment until the Work is completed, nor shall Contractor be relieved from its obligations and liabilities assumed under the Contractor's Agreement. If DFCM's costs exceed the amount of any payment(s) owed by DFCM to Contractor subject to offset by DFCM, DFCM may bill Contractor for the difference, which Contractor shall pay within twenty-eight (28) days of receipt of DFCM's invoice.

12.2.3 ITEMS REQUIRED TO BE TRANSFERRED OR DELIVERED. DFCM may require Contractor to transfer title and deliver to DFCM, in the manner and to the extent directed by DFCM:

12.2.3.1 Any completed portion of the Work; and

12.2.3.2 Any partially completed portion of the Work and any parts, tools, dies, jigs, fixtures, drawings, information, and contract rights as Contractor has specifically produced or specifically acquired for the performance of such part of the Work as has been terminated; and Contractor shall, upon direction of DFCM, protect and preserve property in the possession of Contractor in which DFCM has an interest.

12.2.4 PAYMENT. When DFCM terminates Contractor's Agreement for one or more of the reasons stated in Section 12.2.1, DFCM may withhold payment and/or pursue all available remedies.

12.2.5 DFCM PROTECTION IF LIENABLE. When the Work is lienable, DFCM may withhold from amounts otherwise due Contractor for such Work such amount as DFCM determines to be necessary to protect the State against loss because of liens.

12.2.6 CREDITS AND DEFICITS. If the unpaid balance of the Contract Price exceeds the full cost of finishing the Work, including compensation for the A/E's services and expenses made necessary thereby, such excess shall be paid to Contractor. If such cost exceeds the unpaid balance of the Contract Price, Contractor shall pay the difference to DFCM and this obligation for payment shall survive the termination of Contractor's Agreement.

12.2.7 IF CONTRACTOR FOUND NOT IN DEFAULT OR EXCUSABLE. If, after notice of termination of Contractor's Agreement under the provisions of Section 12.2, it is determined for any reason that Contractor was not in default under the provisions of Section 12.2, or that the default was excusable under the provisions of Section 12.2, the rights and obligations of the parties shall be the same as if the notice of termination had been issued pursuant to the termination for convenience provisions of Section 12.3.

12.2.8 RIGHTS AND REMEDIES NOT EXCLUSIVE. The rights and remedies of DFCM provided in this Section 12.2 shall not be exclusive and are in addition to any other rights and remedies provided by law or under the Contract Documents.

12.2.9 TIME PERIOD FOR CLAIMS. Any PRE by Contractor for adjustment under this Section 12.2 must be asserted by Contractor, in writing, within twenty-one (21) days from the date of termination; provided that DFCM may, in its sole discretion, receive and act upon any such PRE asserted at any time prior to final payment under Contractor's Agreement.

12.3 TERMINATION FOR CONVENIENCE OF DFCM.

12.3.1 IN GENERAL. The performance of Work under Contractor's Agreement may be terminated by DFCM in accordance with this Section 12.3 in whole or in part, or from time to time, whenever DFCM shall determine that such termination is in the best interest of DFCM or any person or entity for whom DFCM is acting under Contractor's Agreement. Any such termination shall be effectuated by delivery to Contractor of a notice of termination specifying the extent to which performance of Work is terminated and the date upon which such termination becomes effective.

12.3.2 CONTRACTOR OBLIGATIONS. After receipt of a notice of termination, and except as otherwise directed by DFCM in writing, the Contractor shall:

12.3.2.1 Stop Work under Contractor's Agreement on the date and to the extent specified in the notice of termination;

12.3.2.2 Place no further orders or subcontracts for materials, services or facilities, except as may be necessary for completion of such portion of the Work that is not terminated;

12.3.2.3 Terminate all orders and subcontracts to the extent that they relate to performance of Work terminated by the notice of termination;

12.3.2.4 Assign to DFCM in the manner, at the times, and to the extent directed by DFCM, all of the right, title, and interest of Contractor under the orders and subcontracts so terminated, in which case DFCM shall have the right, in its discretion, to settle or pay any or all claims arising out of the termination of such orders and subcontracts;

12.3.2.5 Settle all outstanding liabilities and all claims arising out of such termination of orders and subcontracts, with the approval or ratification of DFCM, which approval or ratification shall be final for all the purposes of this Section 12.3;

12.3.2.6 Transfer title and deliver to DFCM in the manner, at the times, and to the extent, if any, directed by DFCM:

12.3.2.6.1 The fabricated or unfabricated parts, Work in process, completed Work, supplies, and other material produced as a part of, or acquired in connection with the performance of the Work terminated by the notice of termination; and

12.3.2.6.2 The completed or partially completed drawings, information, and other property which, if Contractor's Agreement had been completed, would have been required to be furnished to DFCM;

12.3.2.7 Use best efforts to sell, in the manner, at the times, to the extent, and at the price or prices directed or authorized by DFCM, any property of the types referred to in Section 12.3.2.6; provided, however, that Contractor:

12.3.2.7.1 Shall not be required to extend credit to any purchaser; and

12.3.2.7.2 Shall dispose of any such property under the conditions prescribed by and at a price or prices approved by DFCM; and provided further that the proceeds of any such transfer of or disposition shall be applied in reduction of any payments to be made by DFCM to Contractor under Contractor's Agreement or shall otherwise be credited against the Contract Price or paid in such other manner as DFCM may direct;

12.3.2.8 Complete performance of such part of the Work as shall not have been terminated by the notice of termination; and

12.3.2.9 Take such action as may be necessary, or as DFCM may direct, for the protection and preservation of the property related to Contractor's Agreement which is in the possession of Contractor in which the State of Utah has or may acquire an interest.

12.3.3 TERMINATION CLAIM. After receipt of a notice of termination, Contractor may submit to DFCM a PRE, in the form and with certification prescribed by DFCM. Such PRE shall be submitted promptly but in no event not later than twenty-one (21) days from the effective date of termination.

12.3.4 AGREED UPON PAYMENT. Subject to the provisions of Section 12.3.3 above, Contractor and DFCM may agree upon the amount to be paid to Contractor by reason of the total or partial termination of Work pursuant to this Section 12.3.

12.3.5 PAYMENT NOT AGREED UPON. In the event Contractor and DFCM fail to agree as provided in Section 12.3.4 upon the whole amount to be paid to Contractor by reason of the termination of Work pursuant to this Section 12.3, DFCM shall pay to the Contractor the amounts determined by DFCM as follows, but without duplication of any amounts agreed upon in accordance with Section 12.3.4:

12.3.5.1 With respect to all Work performed prior to effective date of termination, the total (without duplication of any items) of:

12.3.5.1.1 The cost of such Work including undisputed Claim amounts;

12.3.5.1.2 The cost of terminating, settling and paying claims arising out of the termination of Work under subcontracts or orders as provided in Section 12.3.2.5, exclusive of the amounts paid or payable on account of supplies or materials delivered or services furnished by Subcontractors prior to the effective date of termination under Contractor's Agreement, which amounts shall be included in the cost on account of which payment is made under Section 12.3.5.1.1;

12.3.5.1.3 An amount, as overhead and profit on Section 12.3.5.1.1 above, determined by DFCM to be fair and reasonable;

12.3.5.1.4 The reasonable cost of the preservation and protection of property incurred pursuant to Section 12.3.2.9; and any other reasonable cost incidental to termination of Work, including expenses incidental to the determination of the amount due to Contractor as the result of the termination of Work.

12.3.5.1.5 The total amount to be paid to Contractor under Section 12.3.5.1 above shall not exceed the Contract Price as reduced by the amount of payments otherwise made and as further reduced by the Contract Price of Work not terminated. Except for normal spoilage, and except to the extent that DFCM shall have otherwise expressly assumed the risk of loss in writing, there shall be excluded from the amounts payable to Contractor under Section 12.3.5.1 above, the fair value of property which is destroyed, lost, stolen, or damaged so as to become undeliverable to DFCM, or to a buyer pursuant to Section 12.3.2.7.

12.3.6 DEDUCTIONS. In arriving at the amount due Contractor under this Section 12.3, there shall be deducted:

12.3.6.1 All unliquidated advance or other payments on account theretofore made to the Contractor, applicable to the terminated portion of Contractor's Agreement;

12.3.6.2 Any Claim which DFCM and/or the State of Utah may have against Contractor in connection with Contractor's Agreement; and

12.3.6.3 The agreed price for, or the proceeds of sale of, any materials, supplies, or other things acquired by Contractor or sold, pursuant to the provisions of this Section 12.3, and not otherwise recovered by or credited to DFCM.

12.3.7 PARTIAL TERMINATION. If the termination is partial, Contractor may file with DFCM a PRE for the amounts specified in Contractor's Agreement relating to the continued portion of Contractor's Agreement and such equitable adjustment as may be agreed upon shall be made in such amounts. Any PRE under this Section 12.3.7 must be filed within twenty-one (21) days from the effective date of the partial termination.

12.3.8 PARTIAL PAYMENTS. DFCM may, from time to time, under such terms and conditions as it may prescribe, make partial payments and payments on account against costs incurred by Contractor in connection with the terminated portion of Contractor's Agreement whenever, in the opinion of DFCM, the aggregate of such payments shall be within the amount to which Contractor shall be entitled hereunder. If the total of such payments is in excess of the amount finally agreed or determined to be due under this Section 12.3, such excess shall be payable by Contractor to DFCM upon demand, together with interest at a rate stated in Utah Code § 15-1-1, for the period until the date such excess is repaid to DFCM; provided, however, that no interest shall be charged with respect to any such excess payment attributable to a reduction in Contractor's claim by reason of retention or other disposition of termination inventory until fourteen (14) days after the date of such retention or disposition, or such later date as determined by DFCM by reason of the circumstances.

12.3.9 PRESERVE AND MAKE AVAILABLE RECORDS. Unless otherwise provided for in Contractor's Agreement, or by applicable law, Contractor shall, from the effective date of termination until the expiration of three years after final settlement under Contractor's Agreement, preserve and make available to DFCM at all reasonable times at the office of Contractor, but without charge to DFCM, all books, records, documents, and other evidence bearing on the costs and expenses of Contractor under Contractor's Agreement and relating to the Work terminated hereunder, or, to the extent approved by DFCM, photographs, or other authentic reproductions thereof.

12.3.10 SUSPENSION, DELAY OR INTERRUPTION OF WORK BY DFCM FOR CONVENIENCE. DFCM may in writing and without cause, order Contractor to suspend, delay, or interrupt the Work, in whole or in part, for such period of time as DFCM may determine to be appropriate for the convenience of DFCM.

12.4 DFCM'S RIGHT TO STOP THE WORK. If Contractor fails to correct Work or fails to carry out Work as required by the Contract Documents or fails to comply with all required and customary safety precautions; DFCM, in writing, may order Contractor to stop the Work, or any portion thereof, until the cause for such order has been eliminated; however, the right of DFCM to stop the Work shall not give rise to a duty on the part of DFCM to exercise this right for the benefit of Contractor or any other person or entity.

SUPPLEMENTAL GENERAL CONDITIONS FOR CONSTRUCTION AGREEMENTS

July 15, 2008

Article 1. Intent and Purpose: Senate Bill 220 – 2008.
The 2008 Utah Legislature passed Senate Bill 220 entitled "Cause of Action for Defective Construction" which law became effective May 5, 2008 (hereinafter "SB220"). The intent purpose of Article 1 through 3 of these Supplement General Conditions is to provide the necessary provisions to the General Conditions as a result of such Bill.

Article 2. "Entities under the Contractor" shall mean any and all agents, independent contractors, subcontractors, suppliers, manufacturers and providers at every tier under the General Contractor.

Article 3. General Provisions

3.1 Conditions. The General Conditions impose duties and performance obligations on the parties. This includes, but is not limited to, the provisions of Article 5.2.1 (regarding subcontractor's compliance with Contract Documents), Article 4.13 (indemnification which discusses acts, omissions, and negligence responsibility) and other provisions of the General Conditions which list many performance obligations of the General Contractor and those under the General Contractor.

3.2 Third Party Beneficiary. The State of Utah and DFCM shall be an intended third party beneficiary to all contracts entered into with Entities under the Contractor. Upon written request by DFCM, DFCM shall be entitled to obtain copies of all such contracts. The General Contractor shall be responsible for assuring that all such third party beneficiary agreements are in place and shall bear the responsibility for any lack of required language in any contracts with an Entity under the Contractor which does not contain this required provision.

3.3 "Economic Loss Rule." The "Economic Loss Rule" as it has been referred to in Utah law shall be deemed to be interpreted in accordance with prevailing Utah law.

3.4 Toxic Torts. "Defective Construction" for purposes of any limitation of any cause of action or right as contemplated by SB220 does not, under these Supplemental General Conditions and for purposes of any Entities under the Contractor, include the use or installing of a defective or inherently dangerous, hazardous or toxic product, substance, or material. The State has third party beneficiary rights and other rights allowed by law to pursue a direct cause of action against the manufacturer and/or distributor of such defective or inherently dangerous, hazardous or toxic product, substance or material, except that the General Contractor and other subcontractors, exclusive of manufacturers and distributors, under the General Contractor shall not be responsible to the State of Utah for said "product, substance or material" unless the General Contractor or such subcontractor knew or should reasonably have known that the product, substance or material was defective or inherently dangerous, hazardous or toxic at the time it was provided or installed on the Project.

3.5 Subsection 3 of SB 220. For purposes of Subsection (3) of SB 220, the phrase "property damage" shall be deemed to refer to damage to "other property" meaning property that is other than the exact specific construction defect itself.

3.6 "Failure of the Construction to Function as Designed." The language "failure to function as designed" as used in SB 220 shall not be deemed to refer to the failure of the construction to be constructed in accordance with the Contract Documents.

3.7 Independent Duty. The State of Utah and DFCM maintain the right to pursue a cause of action against the General Contractor and directly against any Entities under the Contractor, for violation of any independent duty owed to the State of Utah or DFCM.

3.8 Not create Contract Right by Entity under the Contractor with State of Utah or DFCM. These Supplemental General Conditions shall not be construed in any manner which would create a contract between the State of Utah/DFCM and any Entity under the Contractor, except for the Third Party Beneficiary rights of the State of Utah/DFCM provided herein. Any pursuit of a claim by an Entity under the Contractor, including payment claims, shall be maintained either against the payment bond or the upper tier Contractor in accordance with Utah law.

Article 4. Warranties and Obligations

Every Entity under the Contractor has an obligation to comply with the requirements of this Contract, including the indemnification of the Owner for negligent or intentional construction defects and to provide materials and construction that meets all express or implied warranties under the Uniform Commercial Code, including fitness for a particular purpose, merchantability, workmanlike construction (work completed in a skillful manner and is non-defective) and habitability, and is performed with the reasonable care to protect persons and property. In regard to toxic, hazardous materials and other matters of construction where applicable statutory and case law allows, strict liability shall apply.

SUPPLEMENTAL GENERAL CONDITIONS FOR DESIGN AGREEMENTS

July 15, 2008

Article 1. Intent and Purpose: Senate Bill 220 – 2008.
The 2008 Utah Legislature passed Senate Bill 220 entitled "Cause of Action for Defective Construction" which law became effective May 5, 2008 (hereinafter "SB220"). The intent purpose of these Supplement General Conditions is to provide the necessary provisions to the General Conditions as a result of such Bill.

Article 2. "Entities under the Designer" shall mean any and all agents, independent contractors, consultants, subconsultants, subcontractors, suppliers, manufacturers and providers at every tier under the Designer.

Article 3. General Provisions

3.1 Design Agreement. The Design Agreement for the subject Project imposes duties and performance obligations on the parties. This includes, but is not limited to, the standard of care provisions provided in said Design Agreement.

3.2 Third Party Beneficiary. The State of Utah and DFCM shall be a third party beneficiary to all contracts entered into with Entities under the Designer. Upon written request by DFCM, DFCM shall be entitled to obtain copies of all such contracts. The Designer shall be responsible for assuring that all such third party beneficiary agreements are in place and shall bear the responsibility for any lack of required language in any contracts with an Entity under the Designer which does not contain this required provision.

3.3. "Economic Loss Rule." The "Economic Loss Rule" as it has been referred to in Utah law shall be deemed to be interpreted in accordance with prevailing Utah law.

3.4 Toxic Torts. "Defective Construction" for purposes of any limitation of any cause of action or right as contemplated by SB220 does not, under these Supplemental General Conditions and for purposes of any Entities under the Designer, include the use or installing of a defective or inherently dangerous,

hazardous or toxic product, substance, or material. The State has third party beneficiary rights and other rights allowed by law to pursue a direct cause of action against the manufacturer and/or distributor of such defective or inherently dangerous, hazardous or toxic product, substance or material, except that the Designer and other consultants/subconsultants under the Designer, exclusive of manufacturers and distributors, shall not be responsible to the State of Utah for said "product, substance or material" unless the Designer or such consultants/subconsultants knew or should reasonably have known that the product, substance or material was defective or inherently dangerous, hazardous or toxic at the time it was made a part of the Contract Documents by the Designer.

3.5 Subsection 3 of SB 220. For purposes of Subsection (3) of SB 220, the phrase "property damage" shall be deemed to refer to damage to "other property" meaning property that is other than the exact specific construction defect itself.

3.6 "Failure of the Construction to Function as Designed." The language "failure to function as designed" as used in SB 220 shall not be deemed to refer to the failure of the construction to be constructed in accordance with the Contract Documents.

3.7 Independent Duty. The State of Utah and DFCM maintain the right to pursue a cause of action against the Designer and directly against any Entities under the Designer, for violation of any independent duty owed to the State of Utah or DFCM.

3.8 Not create Contract Right by Entity under the Designer with State of Utah or DFCM. These Supplemental General Conditions shall not be construed in any manner which would create a contract between the State of Utah/DFCM and any Entity under the Designer, except for the Third Party Beneficiary rights of the State of Utah/DFCM provided herein. Any pursuit of a claim by an Entity under the Designer, including payment claims, shall be maintained against the upper tier entity in accordance with Utah law

SUPPLEMENTAL GENERAL CONDITIONS FOR DRUG AND ALCOHOL TESTING DESIGN AND/OR CONSTRUCTION CONTRACTS

July 1, 2010

1. These Supplemental General Conditions shall only apply to design or construction contracts in compliance with UCA Section 63G-6-604 and Utah Administrative Code Rule R23-7. (Note: the Administrative Rule is anticipated to have an effective date in early July, 2010 and will upon its being effective apply to those design and construction contracts issued on or after July 1, 2010, and the Statute itself is effective on July 1, 2010.) All applicable provisions of UCA Section 63G-6-604 and Utah Administrative Code Rule R23-7 are incorporated herein by reference as if fully set forth herein. The provisions below provide some, but not all of the provisions of said statute and administrative rule. The absence of the recitation of a provision of UCA Section 63G-6-604 or Utah Administrative Code Rule R23-7 below, shall not lesson its importance. Contractors and Designers are encouraged to read the complete UCA Section 63G-6-604 and Utah Administrative Code Rule R23-7 in order to assure compliance with all the applicable provisions.

2. Definitions. For the purpose of these Supplemental General Conditions, the definitions in UCA Section 63G-6-604 and Utah Administrative Code Rule R23-7 shall apply. For convenience, the following definitions are provided below:

a. **"Contractor" for purposes of these Supplemental General Conditions includes the Prime Contractor, a Designer (Architect/Engineer), and any of their subcontractors, consultants or subconsultants at any tier involved in design and/or construction. "Contractor" for purposes of these Supplemental General Conditions does not include a supplier who provide only materials, equipment or supplies to a Contractor, Designer or any of their subcontractors, consultants or subconsultants at any tier.**

b. "Covered Individual" means an individual who: (i) on behalf of the Contractor provides services directly related to design or construction under the contract; and (ii) is in a safety sensitive position, including a design position that has responsibilities that directly affect the safety of an improvement to real property that is the subject of a state construction contract

3. Contractor shall have a drug and alcohol testing policy in accordance with UCA Section 63G-6-604 and Utah Administrative Code Rule R23-7 during the period of the contract that applies to the "Covered Individuals" hired by the Contractor. Contractor shall post in one or more conspicuous places notice

to "Covered Individuals" hired by the Contractor that the Contractor has the drug and alcohol testing policy described in UCA Section 63G-6-604 and Utah Administrative Code Rule R23-7-4(1)(a)(i). Said "Covered Individuals" shall be subject to random drug and alcohol testing under said policy if at any time during the period of the contract there are ten (10) or more "Covered Individuals" hired by the Contractor.

4. Contractor hereby certifies the following:

a. By executing this Contract, that the Contractor, including all entities included in the definition of Contractor in paragraph 2.a. above, shall comply with all provisions of Utah Administrative Code Rule R23-7 as well as UCA 63G-6-604, including having and maintaining a drug and alcohol testing policy, the posting and random testing requirements during the period of the contract that applies to Covered Individuals hired by the Contractor, including all entities included in the definition of Contractor in paragraph 2.a. above;

b. That the Contractor, including all entities included in the definition of Contractor in paragraph 2.a. above, shall have these requirements placed in all subcontracts for design or construction at any tier, in order that all such subcontractors, consultants and subconsultants at any tier have notice of these requirements and understand the need for compliance with these requirements;

c. That the subcontractors, consultants and subconsultants at any tier referred to in paragraph 4.b. above shall comply with the same requirements as the Contractor for having and maintaining a drug and alcohol testing policy, the posting and random testing requirements during the period of their contract;

d. That the Contractor, or any entity included in the definition of Contractor in paragraph 2.a. above may be suspended or debarred in accordance with the Utah Procurement Code for failure to comply as provided in UCA Section 63G-6-604(3)(a) and Utah Administrative Code Rule R23-7-4(3)(b); and

e. That the prime contactor or prime designer shall on a semi-annual basis throughout the term of this Contract, report to the Division in writing, information that indicates compliance with the provisions of UCA Section 63G-6-604 and Utah Administrative Code Rule R23-7.

5. Reasonable notice and an opportunity to cure any violation of UCA 63G-6-604 shall be provided to the Contractor before any suspension or debarment may be undertaken by the Division against the Contractor in light of the circumstances of the Contract or the violation. The greater the risk to person(s) or property as a result of noncompliance, the shorter this notice and opportunity to cure shall be, including the possibility that the notice may provide for immediate compliance if necessary to protect person(s) or property.

6. If a Contractor meets the requirements of UCA Section 63G-6-604 and Utah Administrative Code Rule R23-7, said statute and rule may not be construed to restrict the Contractor's ability to impose or implement an otherwise lawful provision as part of a drug and alcohol testing policy.

SUPPLEMENTAL GENERAL CONDITIONS FOR HEALTH INSURANCE

Effective March 17, 2016

Article 1. Intent and Purpose.
Current law: House Bill 282, 2016 Utah Legislative Session. Legislative History: The 2009 Utah Legislature passed House Bill 331 entitled "Health Reform – Health Insurance Coverage in State Contracts" which law became effective July 1, 2009. This bill has been amended by HB20 of the 2010 Utah Legislative Session, HB 128 of the 2011 Utah Legislative Session as well as HB 282 of the 2016 Utah.

These laws require certain state entities, including DFCM, to require a contractor who contracts with the state entity to offer the contractor's employees qualified health insurance coverage as defined in Utah Code Annotated (UCA) 26-40-115, and in accordance with the commercially equivalent benchmark provided by the Department of Health, the CHIP commercial benchmark for FY 2016 and posted on the following URL: http://www.health.utah.gov/chip/PDF/2016Benchmark.pdf, in accordance with UCA 26-40-115(2), during the duration of the contract if the contract is over a certain amount, and if the contract is a construction and/or or design contract. The intent of the Articles of these Supplemental General Conditions is to provide the necessary provisions to the General Conditions as a result of such Bills. The purpose of this Supplemental General Conditions for Health Insurance is to comply with UCA 63A-5-205 as well as Utah Code Administrative Rule R23-23 which are both hereby incorporated by reference herein. In case of conflict between UCA 63A-5-205 and Rule R23-23, UCA 63A-5-205 shall control.

Article 2. Applicability of these Supplemental General Conditions.
This Supplemental General Conditions for Health Insurance only applies to those contracts as required by UCA 63A-5-205.

As stated in UCA 63A- 5-205:

(1) Except as provided in UCA 63A-5-205(4) below, UCA 63A-5- 205(3) applies to all design or construction contracts entered into by the Division or the Board on or after July 1, 2009, and
(a) applies to a prime contractor if the prime contract is in the amount of 2,000,000 or greater at the original execution of the contract; and
(b) applies to a subcontractor if the subcontract is in the amount of $1,000,000 or greater at the original execution of the contract.
(2) UCA 63A-5-205(3) does not apply if:
(a) the application of UCA 63A-5-205(3) jeopardizes the receipt of federal funds;
(b) the contract is a sole source contract;
(c) the contract is an emergency procurement;
(d) to a change order as defined in Section 63G-6a-103, or a modification to a contract, when the contract does not meet the threshold required by UCA 63A-5-205(3).

(3) A person who intentionally uses change order or contract modifications to circumvent the requirements of UCA 63A-5-205(3) is guilty of an infraction.

Article 3. Definitions.

The following definitions apply to this Supplemental General Conditions for Health Insurance:

3.1 “Contractor” means the person/entity under direct contract with the Division herein. If the direct contract includes a Design Professional, then the Design Professional is a "Contractor" for purposes of this Supplemental General Conditions for Health Insurance.

3.2 “Design Professional” means the Architect or Engineer, its Subconsultants or Subcontractors at any tier, or any of their agents, employees, including those employed directly or indirectly, or other persons or entities for whose acts the Design Professional or its Subconsultants/Subcontractors at any tier may be liable.

3.3 “Employee(s)” means an “employee.” “worker” or “operative” as defined in UCA 34A-2-104 who:

(i) works at least 30 hours per calendar week; and

(ii) meets employer eligibility waiting requirements for health care insurance which may not exceed the first day of the calendar month following 60 days from the date of hire.

3.4 "Health benefit plan" means the same as that term is defined in UCA 31A-1-301.

3.5 "Qualified health insurance coverage" means the same as that term is defined in UCA 26-40-115.

3.6 "Subcontractor" means the same as that term is defined in Section 63A-5-208.

3.7 "State" means the State of Utah.

3.8 “Director” includes an authorized designee of the Director.

Article 4. Health Insurance Certification.

4.1 A Contractor (including Design Professional) shall demonstrate compliance with UCA 63A-5-205 (6)(a) or (b) at the time of execution of each initial contract described in UCA 63A-5-205(3). The compliance is subject to an audit by DAS, DFCM or the Office of the Legislative Auditor General. A Contractor (including Design Professional) subject to UCA Section 63A-5-205(3) shall demonstrate to the director that the Contractor has and will maintain an offer of qualified health insurance coverage for the Contractor’s employees and employees’ dependents. Such Certification shall be on the form provided by DFCM.

4.2 If a subcontractor of the contractor is subject to Subsection (3) of UCA 63A-5-205, the contractor shall:

(a) place a requirement in the subcontract that the subcontractor shall obtain and maintain an offer of qualified health insurance coverage for the subcontractor's employees and the employees' dependents during the duration of the subcontract; and

(b) certify to the director that the subcontractor has and will maintain an offer of qualified health insurance coverage for the subcontractor's employees and the employees’ dependents during the duration of the prime contract.

4.3 The actuarially equivalent determination required for the qualified health insurance coverage is met by the Contractor if the Contractor provides the department or division with a written statement of actuarial equivalency, which is no more than one year old, regarding the contractor's offer of qualified health coverage from an actuary selected by the contractor or the contractor's insurer, or an underwriter who is responsible for developing the employer group's premium rates;

Rule R-23-23. (this will be updated by the Building Board to comply with HB 282).

SUPPLEMENTAL GENERAL CONDITIONS FOR ILLEGAL IMMIGRATION

July 1, 2009

Article 1. Intent and Purpose. Senate Bill 81 modified by Senate Bill 39 – 2009. The 2009 Utah Legislature passed Senate Bills 81 and 39 regarding "**Illegal Immigration**" which laws became effective July 1, 2009 (hereinafter "SB81/39"). These bills deal with provisions related to the immigration status of individuals within the state. The intent of Articles 1 through 3 of these Supplemental General Conditions is to provide the necessary provisions to the General Conditions as a result of such bills.

Article 2. Applicability. These "Supplemental General Conditions for Illegal Immigration" under SB 39 of the 2009 Utah General Legislative Session, only applies to Request for Proposals and includes sole sources that are part of Requests for Proposals. This document does not apply to procurements that are done by the Competitive Sealed Bidding process (often referred to as "low-bid"), the Multi-Step Process, direct awards, sole sources awards that are not part of Requests for Proposals, and emergency procurements. This document also does not apply to good faith contract modifications to contracts that existed prior to July 1, 2009.

Article 3. E-Verify Clause. Certify registration and use of employment "Status Verification System".

3.1 Each offeror and each person signing on behalf of any offeror certifies as to its own entity, under penalty of perjury, that the named Contractor has registered and is participating in the Status Verification System to verify the work eligibility status of the Contractor's new employees that are employed in the State of Utah in accordance with UCA Section 63G-11-103. *(A copy of 63G-11-103 is provided at the end of this document for your convenience. *)*

3.2 The Contractor shall require that the following provision be placed in each subcontract at every tier: "The subcontractor shall certify to the main (prime or general) contractor by affidavit that the subcontractor has verified through the Status Verification System the employment status of each new employee of the respective subcontractor, all in accordance with Section 63G-11-103 and to comply with all applicable employee status verification laws. Such affidavit must be provided prior to the notice to proceed for the subcontractor to perform the work."

3.3 The State of Utah or DFCM will not consider a proposal for award, nor will it make any award where there has not been compliance with this Article.

3.4 Manually or electronically signing the Proposal is deemed the Contractor's certification of compliance with all provisions of this employment status verification certification required by all applicable status verification laws including UCA Section 63G-11-103.

Article 4. Indemnity

4.1 Contractor (includes, but is not limited to any Contractor, Design Professional, Designer or Consultant) shall protect, indemnify and hold harmless, the State of Utah, the DFCM and its officers, employees, agents, representatives and anyone that the State of Utah or the DFCM may be liable for, against any claim, damages or liability arising out of or resulting from violations of Article 2 whether violated by employees, agents, or contractors of the following:

4.1.1 Contractor;
4.1.2. Subcontractor at any tier; and/or
4.1.3 any entity or person for whom the Contractor or Subcontractor may be liable.

4.2 Notwithstanding 3.1 above, Design Professionals or Designers under direct contract with the DFCM shall only be required to indemnify the State of Utah or the DFCM for a liability claim that arises out of the design professional's services, unless the liability claim arises from the Design Professional's negligent act, wrongful act, error or omission, or other liability imposed by law except that the Design Professional shall be required to indemnify the State of Utah or the DFCM in regard to subcontractors or subconsultants at any tier that are under the direct or indirect control or responsibility of the Design Professional, and includes all independent contractors, agents, employees or anyone else for whom the Design Professional may be liable at any tier.

*** The following is provided for your convenience from the Utah Code.**

63G-11-103 (Effective 07/01/09). Status verification system -- Registration and use -- Performance of services -- Unlawful practice.

(1) As used in this section:

(a) "Contract" means an agreement for the procurement of goods or services that is awarded through a request for proposals process with a public employer and includes a sole source contract.

(b) "Contractor" means a subcontractor, contract employee, staffing agency, or any contractor regardless of its tier.

(c) "Public employer" means a department, agency, instrumentality, or political subdivision of the state.

(d) (i) "Status Verification System" means an electronic system operated by the federal government, through which an authorized official of a state agency or a political subdivision of the state may inquire by exercise of authority delegated pursuant to 8 U.S.C., Sec. 1373, to verify the citizenship or immigration status of an individual within the jurisdiction of the agency or political subdivision for a purpose authorized under this section.

(ii) "Status Verification System" includes:

(A) the electronic verification of the work authorization program of the Illegal Immigration Reform and Immigration Responsibility Act of 1996, 8 U.S.C., Sec. 1324a, known as the E-verify Program;

(B) an equivalent federal program designated by the United States Department of Homeland Security or other federal agency authorized to verify the work eligibility status of a newly hired employee pursuant to the Immigration Reform and Control Act of 1986;

(C) the Social Security Number Verification Service or similar online verification process implemented by the United States Social Security Administration; or

(D) an independent third-party system with an equal or higher degree of reliability as the programs, systems, or processes described in Subsection (1)[~~(c)~~](d)(ii)(A), (B), or (C).

(e) "Unauthorized alien" means an alien as defined in 8 U.S.C., Sec. 1324a(h)(3).

(2) (a) Each public employer shall register with and use a Status Verification System to verify the federal employment authorization status of a new employee.

(b) This section shall be enforced without regard to race, religion, gender, ethnicity, or national origin.

(3) (a) Beginning July 1, 2009:

(i) a public employer may not enter into a contract for the physical performance of services within the state with a contractor unless the contractor registers and participates in the Status Verification System to verify the work eligibility status of the contractor's new employees that are employed in the state; and

(ii) a contractor shall register and participate in the Status Verification System in order to enter into a contract with a public employer.

(b) (i) For purposes of compliance with Subsection (3)(a), a contractor is individually responsible for verifying the employment status of only new employees who work under the contractor's supervision or direction and not those who work for another contractor or subcontractor, except as otherwise provided in Subsection (3)(b)(ii).

(ii) Each contractor or subcontractor who works under or for another contractor shall certify to the main contractor by affidavit that the contractor or subcontractor has verified through the Status Verification System the employment status of each new employee of the respective contractor or subcontractor.

(c) Subsection (3)(a) does not apply to a contract:

(i) entered into by the entities referred to in Subsection (3)(a) prior to July 1, 2009, even though the contract may involve the physical performance of services within the state on or after July 1, 2009; or

(ii) that involves underwriting, remarketing, broker-dealer activities, securities placement, investment advisory, financial advisory, or other financial or investment banking services.

(4) (a) It is unlawful for an employing entity in the state to discharge an employee working in Utah who is a United States citizen or permanent resident alien and replace the employee with, or have the employee's duties assumed by, an employee who:

(i) the employing entity knows, or reasonably should have known, is an unauthorized alien hired on or after July 1, 2009; and

(ii) is working in the state in a job category:

(A) that requires equal skill, effort, and responsibility; and

(B) which is performed under similar working conditions, as defined in 29 U.S.C., Sec. 206 (d)(1), as the job category held by the discharged employee.

(b) An employing entity, which on the date of a discharge in question referred to in Subsection (4)(a) is enrolled in and using the Status Verification System to verify the employment eligibility of its employees in Utah who are hired on or after July 1, 2009, is exempt from liability, investigation, or lawsuit arising from an action under this section.

(c) A cause of action for a violation of this Subsection (4) arises exclusively from the provisions of this Subsection (4).

SUPPLEMENTAL GENERAL CONDITIONS REGARDING ILLEGAL IMMIGRATION

May 10, 2011

Article 1. Intent and Purpose. Senate Bill 81 modified by Senate Bill 39 – 2009. The 2009 Utah Legislature passed Senate Bills 81 and 39 regarding "**Illegal Immigration**" which laws became effective July 1, 2009 (hereinafter "SB81/39"). The 2011 Utah Legislature made further amendments that relate to this document in HB 116. These bills deal with provisions related to the immigration status of individuals within the state. The intent of Articles 1 through 3 of these Supplemental General Conditions is to provide the necessary provisions to the General Conditions as a result of such bills.

Article 2. Applicability. These "Supplemental General Conditions for Illegal Immigration" under SB 39 of the 2009 Utah General Legislative Session and HB 116 of the 2011 Utah General Legislative Session, only applies to Request for Proposals and includes sole sources that are part of Requests for Proposals. However, all entities under contract with DFCM as well as all others that are subject to applicable immigration laws, including their subcontractors/subconsultants, at any tier, shall comply with all applicable immigration laws. This document does not apply to procurements that are done by the Competitive Sealed Bidding process (often referred to as "low-bid"), the Multi-Step Process, direct awards, sole sources awards that are not part of Requests for Proposals, and emergency procurements. This document also does not apply to good faith contract modifications to contracts that existed prior to July 1, 2009.

There is a Program Start Date defined in said HB 116 of the 2011 Utah General Legislative Session. At such time that knowledge is obtained about when that Program Start Date is, DFCM will post an amendment to this "Supplemental General Conditions Regarding Illegal Immigration."

Article 3. E-Verify Clause. Certify registration and use of employment "Status Verification System".

3.1 Each offeror and each person signing on behalf of any offeror certifies as to its own entity, under penalty of perjury, that the named Contractor has registered and is participating in the Status Verification System to verify the work eligibility status of the Contractor's new employees that are employed in the State of Utah in accordance with 63G-12-302 as described in HB 116 of the 2011 Utah General Legislative Session. *(A copy of 63G-12-302 is provided at the end of this document for your convenience.)*

3.2 The Contractor shall require that the following provision be placed in each subcontract at every tier: "The subcontractor shall certify to the main (prime or general) contractor by affidavit that the subcontractor has verified through the Status Verification System the employment status of each

new employee of the respective subcontractor, all in accordance with Section 63G-11-103 and to comply with all applicable employee status verification laws. Such affidavit must be provided prior to the notice to proceed for the subcontractor to perform the work."

3.3 The State of Utah or DFCM will not consider a proposal for award, nor will it make any award where there has not been compliance with this Article.

3.4 Manually or electronically signing the Proposal is deemed the Contractor's certification of compliance with all provisions of this employment status verification certification required by all applicable status verification laws including UCA Section 63G-12-302 as described in HB 116 of the 2011 Utah General Legislative Session. *(A copy of 63G-12-302 is provided at the end of this document for your convenience.)*

Article 4. Indemnity

4.1 Contractor (includes, but is not limited to any Contractor, Design Professional, Designer or Consultant) shall protect, indemnify and hold harmless, the State of Utah, the DFCM and its officers, employees, agents, representatives and anyone that the State of Utah or the DFCM may be liable for, against any claim, damages or liability arising out of or resulting from violations of these Supplemental General Conditions Regarding Illegal Immigration whether violated by employees, agents, or contractors of the following:

4.1.1 Contractor;
4.1.2. Subcontractor at any tier; and/or
4.1.3 any entity or person for whom the Contractor or Subcontractor may be liable.

4.2 Notwithstanding 4.1 above, Design Professionals or Designers under direct contract with the DFCM shall only be required to indemnify the State of Utah or the DFCM for a liability claim that arises out of the design professional's services, unless the liability claim arises from the Design Professional's negligent act, wrongful act, error or omission, or other liability imposed by law except that the Design Professional shall be required to indemnify the State of Utah or the DFCM in regard to subcontractors or subconsultants at any tier that are under the direct or indirect control or responsibility of the Design Professional, and includes all independent contractors, agents, employees or anyone else for whom the Design Professional may be liable at any tier.

*** The following is provided for your convenience: Note: The definitions of "Public Employer," "Status Verification System," "Unauthorized Alien," and "Program Start Date" as well as other relevant definitions are located in Section 63G-12-102. Other provisions of Utah Code Title 63G, Chapter 12, should be read as well as all applicable immigration laws.)**

63G-12-302. Status verification system -- Registration and use -- Performance of services -- Unlawful practice.

(1) As used in this section:

(a) "Contract" means an agreement for the procurement of goods or services that is awarded through a request for proposals process with a public employer and includes a sole source contract.

(b) "Contractor" means a subcontractor, contract employee, staffing agency, or any contractor regardless of its tier.

(2) (a) Subject to Subsection (5), a public employer shall register with and use a Status Verification System to verify the federal employment authorization status of a new employee.

(b) This section shall be enforced without regard to race, religion, gender, ethnicity, or national origin.

(3) (a) Subject to Subsection (5), beginning July 1, 2009:

(i) a public employer may not enter into a contract for the physical performance of services within the state with a contractor unless the contractor registers and participates in the Status Verification System to verify the work eligibility status of the contractor's new employees that are employed in the state; and

(ii) a contractor shall register and participate in the Status Verification System in order to enter into a contract with a public employer.

(b) (i) For purposes of compliance with Subsection (3)(a), a contractor is individually responsible for verifying the employment status of only new employees who work under the contractor's supervision or direction and not those who work for another contractor or subcontractor, except as otherwise provided in Subsection (3)(b)(ii).

(ii) Each contractor or subcontractor who works under or for another contractor shall certify to the main contractor by affidavit that the contractor or subcontractor has verified through the Status Verification System the employment status of each new employee of the respective contractor or subcontractor.

(c) Subsection (3)(a) does not apply to a contract:

(i) entered into by the entities referred to in Subsection (3)(a) prior to July 1, 2009, even though the contract may involve the physical performance of services within the state on or after July 1, 2009; or

(ii) that involves underwriting, remarketing, broker-dealer activities, securities placement, investment advisory, financial advisory, or other financial or investment banking services.

(4) (a) It is unlawful for an employing entity in the state to discharge an employee working in Utah who is a United States citizen or permanent resident alien and replace the employee with, or have the employee's duties assumed by, an employee who:

(i) the employing entity knows, or reasonably should have known, is an unauthorized alien hired on or after July 1, 2009; and

(ii) is working in the state in a job category:

(A) that requires equal skill, effort, and responsibility; and

(B) which is performed under similar working conditions, as defined in 29 U.S.C., Sec. 206 (d)(1), as the job category held by the discharged employee.

(b) An employing entity, which on the date of a discharge in question referred to in Subsection (4)(a) is enrolled in and using the Status Verification System to verify the employment eligibility of its employees in Utah who are hired on or after July 1, 2009, is exempt from liability, investigation, or lawsuit arising from an action under this section.

(c) A cause of action for a violation of this Subsection (4) arises exclusively from the provisions of this Subsection (4).

(5) On and after the program start date:

(a) a public employer, after hiring an employee, shall verify the employment eligibility of the new employee:

(i) through the status verification system if the individual does not hold a permit; and

(ii) through the u-verify program if the individual holds a permit; and

(b) a contractor is considered to be in compliance with this section if, after hiring an employee, the contractor verifies the employment eligibility of the new employee:

(i) through the status verification system if the individual does not hold a permit; and

(ii) through the u-verify program if the individual holds a permit.

Renumbered and Amended by Chapter 18, 2011 General Session

SECTION 011000
SUMMARY

PART 1 GENERAL

1.01 PROJECT

A. Project Name: DTC Welding Technology Building

B. Owner's Name: DFCM.

C. Architect's Name: CRSA.

D. The Project consists of the construction of a new 17,042 s.f. welding technology and fabrication teaching facility on the Davis Technical College campus. The facility will accommodate a total of 68 welding booths, along with the required fabrication tools and machinery. In addition to the welding program, the building will also accommodate a classroom space, instructor offices, and associated spaces required for a standalone building. There will be an exterior partially covered material storage and laydown yard..

1.02 CONTRACT DESCRIPTION

A. Contract Type: A single prime contract based on GMP as described in Document 005000 - Contracting Forms and Supplements.

1.03 WORK BY OWNER

A. Items noted NIC (Not in Contract) will be supplied and installed by Owner before Date of Substantial Completion. Some items include:
   1. Movable cabinets.
   2. Furnishings.
   3. Vending machines
   4. Shop related small and heavy equipment

B. Owner will supply the following for installation by Contractor:
   1. Paper towel dispensers
   2. Toilet paper dispeners
   3. Soap dispensers
   4. Feminine hygene product dispenser
   5. Seat protector product dispenser
   6. Waste receptacles
   7. Sanitary napkin receptacle
   8.

1.04 FUTURE WORK

1.05 OWNER OCCUPANCY

A. Owner intends to occupy the Project upon Substantial Completion.

B. Cooperate with Owner to minimize conflict and to facilitate Owner's operations.

C. Schedule the Work to accommodate Owner occupancy.

1.06 CONTRACTOR USE OF SITE AND PREMISES

A. Construction Operations: Limited to areas noted on Drawings.

B. Provide access to and from site as required by law and by Owner:
   1. Emergency Building Exits During Construction: Keep all exits required by code open during construction period; provide temporary exit signs if exit routes are temporarily altered.
   2. Do not obstruct roadways, sidewalks, or other public ways without permit.

C. Utility Outages and Shutdown:
   1. Limit shutdown of utility services to 2 hours at a time, arranged at least 24 hours in advance with Owner.

2. Prevent accidental disruption of utility services to other facilities.

PART 2 PRODUCTS - NOT USED

PART 3 EXECUTION - NOT USED

END OF SECTION 011000

SECTION 012000
PRICE AND PAYMENT PROCEDURES

PART 1 GENERAL

1.01 SECTION INCLUDES

A. Procedures for preparation and submittal of applications for progress payments.

B. Documentation of changes in Contract Price and Contract Time.

C. Change procedures.

D. Correlation of Contractor submittals based on changes.

E. Procedures for preparation and submittal of application for final payment.

1.02 RELATED REQUIREMENTS

A. Section 005000 - Contracting Forms and Supplements: Forms to be used.

B. Section 012100 - Allowances: Payment procedures relating to allowances.

C. Section 017800 - Closeout Submittals: Project record documents.

1.03 SCHEDULE OF VALUES

A. Electronic media printout including equivalent information will be considered in lieu of standard form specified; submit draft to Architect for approval.

B. Forms filled out by hand will not be accepted.

1.04 APPLICATIONS FOR PROGRESS PAYMENTS

A. Payment Period: Submit at intervals stipulated in the Agreement.

B. Electronic media printout including equivalent information will be considered in lieu of standard form specified; submit sample to Architect for approval.

C. Forms filled out by hand will not be accepted.

D. For each item, provide a column for listing each of the following:
   1. Item Number.
   2. Description of work.
   3. Scheduled Values.
   4. Previous Applications.
   5. Work in Place and Stored Materials under this Application.
   6. Authorized Change Orders.
   7. Total Completed and Stored to Date of Application.
   8. Balance to Finish.
   9. Retainage.

E. Execute certification by signature of authorized officer.

F. Use data from approved Schedule of Values. Provide dollar value in each column for each line item for portion of work performed and for stored products.

G. List each authorized Change Order as a separate line item, listing Change Order number and dollar amount as for an original item of work.

H. Submit one electronic and three hard-copies of each Application for Payment.

I. Include the following with the application:
   1. Transmittal letter as specified for submittals in Section 013000.
   2. Partial release of liens from major subcontractors and vendors.

1.05 MODIFICATION PROCEDURES

A. Submit name of the individual authorized to receive change documents and who will be responsible for informing others in Contractor's employ or subcontractors of changes to Contract Documents.

B. For minor changes not involving an adjustment to the Contract Price or Contract Time, Architect will issue instructions directly to Contractor.

C. For other required changes, Architect will issue a document signed by Owner instructing Contractor to proceed with the change, for subsequent inclusion in a Change Order.
   1. The document will describe the required changes and will designate method of determining any change in Contract Price or Contract Time.
   2. Promptly execute the change.

D. For changes for which advance pricing is desired, Architect will issue a document that includes a detailed description of a proposed change with supplementary or revised drawings and specifications, a change in Contract Time for executing the change with a stipulation of any overtime work required and the period of time during which the requested price will be considered valid. Contractor shall prepare and submit a fixed price quotation within 14 days.

E. Computation of Change in Contract Amount: As specified in the Agreement and Conditions of the Contract.
   1. For change requested by Architect for work falling under a fixed price contract, the amount will be based on Contractor's price quotation.
   2. For change requested by Contractor, the amount will be based on the Contractor's request for a Change Order as approved by Architect.

F. Substantiation of Costs: Provide full information required for evaluation.
   1. On request, provide the following data:
      a. Quantities of products, labor, and equipment.
      b. Taxes, insurance, and bonds.
      c. Overhead and profit.
      d. Justification for any change in Contract Time.
      e. Credit for deletions from Contract, similarly documented.
   2. Support each claim for additional costs with additional information:
      a. Origin and date of claim.
      b. Dates and times work was performed, and by whom.
      c. Time records and wage rates paid.
      d. Invoices and receipts for products, equipment, and subcontracts, similarly documented.
   3. For Time and Material work, submit itemized account and supporting data after completion of change, within time limits indicated in the Conditions of the Contract.

G. Execution of Change Orders: Architect will issue Change Orders for signatures of parties as provided in the Conditions of the Contract.

H. After execution of Change Order, promptly revise Schedule of Values and Application for Payment forms to record each authorized Change Order as a separate line item and adjust the Contract Sum.

I. Promptly revise progress schedules to reflect any change in Contract Time, revise sub-schedules to adjust times for other items of work affected by the change, and resubmit.

J. Promptly enter changes in Project Record Documents.

1.06 APPLICATION FOR FINAL PAYMENT

A. Prepare Application for Final Payment as specified for progress payments, identifying total adjusted Contract Price, previous payments, and sum remaining due.

B. Application for Final Payment will not be considered until the following have been accomplished:
   1. All closeout procedures specified in Section 017000.

PART 2 PRODUCTS - NOT USED

PART 3 EXECUTION - NOT USED

END OF SECTION 012000

This page intentionally left blank

SECTION 012100
ALLOWANCES

PART 1 GENERAL

1.01 SECTION INCLUDES

A. Cash allowances.

1.02 CASH ALLOWANCES

1.03 ALLOWANCES SCHEDULE

A. Section 115314 Fume Extractors: Include the stipulated sum of $750,000.00 for purchase and delivery of Extraction and Exhaust System.

PART 2 PRODUCTS - NOT USED

PART 3 EXECUTION - NOT USED

END OF SECTION 012100

This page intentionally left blank

SECTION 012500
SUBSTITUTION PROCEDURES

PART 1 GENERAL

1.01 SECTION INCLUDES

A. Procedural requirements for proposed substitutions.

1.02 RELATED REQUIREMENTS

A. Section 004325 - Substitution Request Form - During Procurement: Required form for substitution requests made prior to award of contract (During procurement).

B. Section 006325 - Substitution Request Form - During Construction: Required form for substitution requests made after award of contract (During construction).

C. Section 012100 - Allowances, for cash allowances affecting this section.

1.03 DEFINITIONS

A. Substitutions: Changes from Contract Documents requirements proposed by Contractor to materials, products, assemblies, and equipment.
   1. Substitutions for Cause: Proposed due to changed Project circumstances beyond Contractor's control.
      a. Unavailability.
      b. Regulatory changes.
   2. Substitutions for Convenience: Proposed due to possibility of offering substantial advantage to the Project.
      a. Substitution requests offering advantages solely to the Contractor will not be considered.

1.04 REFERENCE STANDARDS

A. CSI/CSC Form 1.5C - Substitution Request (During the Bidding/Negotiating Stage); Current Edition.

B. CSI/CSC Form 13.1A - Substitution Request (After the Bidding/Negotiating Phase); Current Edition.

PART 2 PRODUCTS - NOT USED

PART 3 EXECUTION

3.01 GENERAL REQUIREMENTS

A. A Substitution Request for products, assemblies, materials, and equipment constitutes a representation that the submitter:
   1. Has investigated proposed product and determined that it meets or exceeds the quality level of the specified product, equipment, assembly, or system.
   2. Agrees to provide the same warranty for the substitution as for the specified product.
   3. Agrees to provide same or equivalent maintenance service and source of replacement parts, as applicable.
   4. Agrees to coordinate installation and make changes to other work that may be required for the work to be complete, with no additional cost to Owner.
   5. Waives claims for additional costs or time extension that may subsequently become apparent.

B. Document each request with complete data substantiating compliance of proposed substitution with Contract Documents. Burden of proof is on proposer.

C. Content: Include information necessary for tracking the status of each Substitution Request, and information necessary to provide an actionable response.
   1. No specific form is required. Contractor's Substitution Request documentation must include the following:
      a. Project Information:

1) Official project name and number, and any additional required identifiers established in Contract Documents.
2) Owner's, Architect's, and Contractor's names.

b. Substitution Request Information:
1) Discrete and consecutive Substitution Request number, and descriptive subject/title.
2) Indication of whether the substitution is for cause or convenience.
3) Issue date.
4) Reference to particular Contract Document(s) specification section number, title, and article/paragraph(s).
5) Description of Substitution.
6) Reason why the specified item cannot be provided.
7) Differences between proposed substitution and specified item.

c. Attached Comparative Data: Provide point-by-point, side-by-side comparison addressing essential attributes specified, as appropriate and relevant for the item:
1) Physical characteristics.
2) In-service performance.
3) Expected durability.
4) Visual effect.
5) Sustainable design features.
6) Warranties.
7) Other salient features and requirements.
8) Include, as appropriate or requested, the following types of documentation:
(a) Product Data:
(b) Samples.
(c) Certificates, test, reports or similar qualification data.
(d) Drawings, when required to show impact on adjacent construction elements.

d. Impact of Substitution:
1) Savings to Owner for accepting substitution.
2) Change to Contract Time due to accepting substitution.

D. Limit each request to a single proposed substitution item.

3.02 SUBSTITUTION PROCEDURES DURING PROCUREMENT

A. Submittal Time Restrictions:
1. Instructions to Bidders specifies time restrictions and the documents required for submitting substitution requests during the bidding period.

3.03 SUBSTITUTION PROCEDURES DURING CONSTRUCTION

A. Submit request for Substitution for Cause within 14 days of discovery of need for substitution, but not later than 14 days prior to time required for review and approval by Architect, in order to stay on approved project schedule.

B. Submit request for Substitution for Convenience within 14 days of discovery of its potential advantage to the project, but not later than 14 days prior to time required for review and approval by Architect, in order to stay on approved project schedule.
1. In addition to meeting general documentation requirements, document how the requested substitution benefits the Owner through cost savings, time savings, greater energy conservation, or in other specific ways.
2. Document means of coordinating of substitution item with other portions of the work, including work by affected subcontractors.
3. Bear the costs engendered by proposed substitution of:
a. Owner's compensation to the Architect for any required redesign, time spent processing and evaluating the request.

3.04 RESOLUTION

A. Architect may request additional information and documentation prior to rendering a decision. Provide this data in an expeditious manner.

B. Architect will notify Contractor in writing of decision to accept or reject request.

3.05 ACCEPTANCE

A. Accepted substitutions change the work of the Project. They will be documented and incorporated into work of the project by Change Order, Construction Change Directive, Architectural Supplementary Instructions, or similar instruments provided for in the Conditions of the Contract.

3.06 CLOSEOUT ACTIVITIES

3.07 ATTACHMENTS

END OF SECTION 012500

This page intentionally left blank

SECTION 013000
ADMINISTRATIVE REQUIREMENTS

PART 1 GENERAL

1.01 SECTION INCLUDES

A. General administrative requirements.

B. Web-based project software service.

C. Preconstruction meeting.

D. Site mobilization meeting.

E. Progress meetings.

F. Construction progress schedule.

G. Contractor's daily reports.

H. Progress photographs.

I. Submittals for review, information, and project closeout.

J. Number of copies of submittals.

K. Requests for Interpretation (RFI) procedures.

L. Submittal procedures.

1.02 RELATED REQUIREMENTS

A. Section 007200 - General Conditions: Dates for applications for payment.

B. Section 016000 - Product Requirements: General product requirements.

C. Section 019113 - General Commissioning Requirements: Additional procedures for submittals relating to commissioning.
   1. Where submittals are indicated for review by both Architect and the Commissioning Authority, submit one extra and route to Architect first, for forwarding to the Commissioning Authority.
   2. Where submittals are not indicated to be reviewed by Architect, submit directly to the Commissioning Authority; otherwise, the procedures specified in this section apply to commissioning submittals.

1.03 REFERENCE STANDARDS

A. AIA G716 - Request for Information; 2004.

B. CSI/CSC Form 12.1A - Submittal Transmittal; Current Edition.

1.04 GENERAL ADMINISTRATIVE REQUIREMENTS

A. Comply with requirements of Section 017000 - Execution and Closeout Requirements for coordination of execution of administrative tasks with timing of construction activities.

B. Make the following types of submittals to Architect:
   1. Requests for Interpretation (RFI).
   2. Requests for substitution.
   3. Shop drawings, product data, and samples.
   4. Test and inspection reports.
   5. Design data.
   6. Manufacturer's instructions and field reports.
   7. Applications for payment and change order requests.
   8. Progress schedules.
   9. Coordination drawings.
   10. Correction Punch List and Final Correction Punch List for Substantial Completion.
   11. Closeout submittals.

PART 2 PRODUCTS - NOT USED

PART 3 EXECUTION

3.01 CONTRACTOR DESIGNATED SUBMITTAL SERVICE

A. Contractor will determine which type of tramission service for contraction administration.

B. Permissions for access will be provided for the architect, owner and user.

3.02 PRECONSTRUCTION MEETING

A. Schedule meeting after Notice of Award.

B. Attendance Required:
   1. Owner.
   2. Architect.
   3. Contractor.

C. Agenda:
   1. Execution of Owner-Contractor Agreement.
   2. Submission of executed bonds and insurance certificates.
   3. Distribution of Contract Documents.
   4. Submission of list of subcontractors, list of products, schedule of values, and progress schedule.
   5. Designation of personnel representing the parties to Contract, _____ and Architect.
   6. Procedures and processing of field decisions, submittals, substitutions, applications for payments, proposal request, Change Orders, and Contract closeout procedures.
   7. Scheduling.

D. Record minutes and distribute copies within two days after meeting to participants, with two copies to Architect, Owner, participants, and those affected by decisions made.

3.03 SITE MOBILIZATION MEETING

A. Attendance Required:
   1. Contractor.
   2. Owner.
   3. Architect.
   4. Contractor's superintendent.
   5. Major subcontractors.

B. Agenda:
   1. Use of premises by Owner and Contractor.
   2. Owner's requirements.
   3. Construction facilities and controls provided by Owner.
   4. Temporary utilities provided by Owner.
   5. Survey and building layout.
   6. Security and housekeeping procedures.
   7. Schedules.
   8. Application for payment procedures.
   9. Procedures for testing.
   10. Procedures for maintaining record documents.
   11. Requirements for start-up of equipment.
   12. Inspection and acceptance of equipment put into service during construction period.

C. Record minutes and distribute copies within two days after meeting to participants, with two copies to Architect, Owner, participants, and those affected by decisions made.

3.04 PROGRESS MEETINGS

A. Schedule and administer meetings throughout progress of the work at maximum monthly intervals.

B. Attendance Required:
   1. Contractor.
   2. Owner.
   3. Architect.
   4. Contractor's superintendent.
   5. Major subcontractors.

C. Agenda:
   1. Review minutes of previous meetings.
   2. Review of work progress.
   3. Field observations, problems, and decisions.
   4. Identification of problems that impede, or will impede, planned progress.
   5. Review of submittals schedule and status of submittals.
   6. Maintenance of progress schedule.
   7. Corrective measures to regain projected schedules.
   8. Planned progress during succeeding work period.
   9. Maintenance of quality and work standards.
   10. Effect of proposed changes on progress schedule and coordination.
   11. Other business relating to work.

D. Record minutes and distribute copies within two days after meeting to participants, with two copies to Architect, Owner, participants, and those affected by decisions made.

3.05 CONSTRUCTION PROGRESS SCHEDULE

A. If preliminary schedule requires revision after review, submit revised schedule within 10 days.

B. Within 20 days after review of preliminary schedule, submit draft of proposed complete schedule for review.
   1. Include written certification that major contractors have reviewed and accepted proposed schedule.

C. Within 10 days after joint review, submit complete schedule.

D. Submit updated schedule with each Application for Payment.

3.06 DAILY CONSTRUCTION REPORTS

A. Include only factual information. Do not include personal remarks or opinions regarding operations and/or personnel.

B. Prepare a daily construction report recording the following information concerning events at Project site and project progress:
   1. Date.
   2. High and low temperatures, and general weather conditions.
   3. List of subcontractors at Project site.
   4. Approximate count of personnel at Project site.
   5. Major equipment at Project site.
   6. Material deliveries.
   7. Safety, environmental, or industrial relations incidents.
   8. Meetings and significant decisions.
   9. Unusual events (submit a separate special report).
   10. Stoppages, delays, shortages, and losses. Include comparison between scheduled work activities (in Contractor's most recently updated and published schedule) and actual activities. Explain differences, if any. Note days or periods when no work was in progress and explain the reasons why.
   11. Directives and requests of Authority(s) Having Jurisdiction (AHJ).
   12. Change Orders received and implemented.
   13. Testing and/or inspections performed.
   14. Signature of Contractor's authorized representative.

3.07 PROGRESS PHOTOGRAPHS

A. Submit photographs with each application for payment, taken not more than 3 days prior to submission of application for payment.

B. Photography Type: Digital; electronic files.

C. Provide photographs of site and construction throughout progress of work produced by an experienced photographer, acceptable to Architect.

D. In addition to periodic, recurring views, take photographs of each of the following events:
   1. Excavations in progress.
   2. Foundations in progress and upon completion.
   3. Structural framing in progress and upon completion.
   4. Enclosure of building, upon completion.
   5. Final completion, minimum of ten (10) photos.

E. Views:
   1. Provide non-aerial photographs from four cardinal views at each specified time, until date of Substantial Completion.
   2. Consult with Architect for instructions on views required.
   3. Provide factual presentation.
   4. Provide correct exposure and focus, high resolution and sharpness, maximum depth of field, and minimum distortion.

F. Digital Photographs: 24 bit color, minimum resolution of 1024 by 768, in JPG format; provide files unaltered by photo editing software.
   1. Delivery Medium: Via email.
   2. File Naming: Include project identification, date and time of view, and view identification.
   3. PDF File: Assemble all photos into printable pages in PDF format, with 2 to 3 photos per page, each photo labeled with file name; one PDF file per submittal.
   4. Hard Copy: Printed hardcopy (grayscale) of PDF file and point of view sketch.

3.08 REQUESTS FOR INTERPRETATION (RFI)

A. Definition: A request seeking one of the following:
   1. An interpretation, amplification, or clarification of some requirement of Contract Documents arising from inability to determine from them the exact material, process, or system to be installed; or when the elements of construction are required to occupy the same space (interference); or when an item of work is described differently at more than one place in Contract Documents.
   2. A resolution to an issue which has arisen due to field conditions and affects design intent.

B. Whenever possible, request clarifications at the next appropriate project progress meeting, with response entered into meeting minutes, rendering unnecessary the issuance of a formal RFI.

C. Reason for the RFI: Prior to initiation of an RFI, carefully study all Contract Documents to confirm that information sufficient for their interpretation is definitely not included.
   1. Include in each request Contractor's signature attesting to good faith effort to determine from Contract Documents information requiring interpretation.
   2. Unacceptable Uses for RFIs: Do not use RFIs to request the following::
      a. Approval of submittals (use procedures specified elsewhere in this section).
      b. Approval of substitutions (see Section - 016000 - Product Requirements)
      c. Changes that entail change in Contract Time and Contract Sum (comply with provisions of the Conditions of the Contract).
   3. Improper RFIs: Requests not prepared in compliance with requirements of this section, and/or missing key information required to render an actionable response. They will be returned without a response, with an explanatory notation.
   4. Frivolous RFIs: Requests regarding information that is clearly indicated on, or reasonably inferable from, Contract Documents, with no additional input required to clarify the

question. They will be returned without a response, with an explanatory notation.

a. The Owner reserves the right to assess the Contractor for the costs (on time-and-materials basis) incurred by the Architect, and any of its consultants, due to processing of such RFIs.

D. Content: Include identifiers necessary for tracking the status of each RFI, and information necessary to provide an actionable response.
   1. Official Project name and number, and any additional required identifiers established in Contract Documents.
   2. Owner's, Architect's, and Contractor's names.
   3. Discrete and consecutive RFI number, and descriptive subject/title.
   4. Issue date, and requested reply date.
   5. Reference to particular Contract Document(s) requiring additional information/interpretation. Identify pertinent drawing and detail number and/or specification section number, title, and paragraph(s).
   6. Annotations: Field dimensions and/or description of conditions which have engendered the request.
   7. Contractor's suggested resolution: A written and/or a graphic solution, to scale, is required in cases where clarification of coordination issues is involved, for example; routing, clearances, and/or specific locations of work shown diagrammatically in Contract Documents. If applicable, state the likely impact of the suggested resolution on Contract Time or the Contract Sum.

E. Attachments: Include sketches, coordination drawings, descriptions, photos, submittals, and other information necessary to substantiate the reason for the request.

F. RFI Log: Prepare and maintain a tabular log of RFIs for the duration of the project.
   1. Indicate current status of every RFI. Update log promptly and on a regular basis.
   2. Note dates of when each request is made, and when a response is received.
   3. Highlight items requiring priority or expedited response.
   4. Highlight items for which a timely response has not been received to date.

G. Review Time: Architect will respond and return RFIs to Contractor within 10 calendar days of receipt. For the purpose of establishing the start of the mandated response period, RFIs received after 12:00 noon will be considered as having been received on the following regular working day.
   1. Response period may be shortened or lengthened for specific items, subject to mutual agreement, and recorded in a timely manner in progress meeting minutes.

H. Responses: Content of answered RFIs will not constitute in any manner a directive or authorization to perform extra work or delay the project. If in Contractor's belief it is likely to lead to a change to Contract Sum or Contract Time, promptly issue a notice to this effect, and follow up with an appropriate Change Order request to Owner.
   1. Response may include a request for additional information, in which case the original RFI will be deemed as having been answered, and an amended one is to be issued forthwith. Identify the amended RFI with an R suffix to the original number.
   2. Do not extend applicability of a response to specific item to encompass other similar conditions, unless specifically so noted in the response.
   3. Upon receipt of a response, promptly review and distribute it to all affected parties, and update the RFI Log.
   4. Notify Architect within seven calendar days if an additional or corrected response is required by submitting an amended version of the original RFI, identified as specified above.

3.09 SUBMITTAL SCHEDULE

A. Submit to Architect for review a schedule for submittals in tabular format.
   1. Submit at the same time as the preliminary schedule specified in Section - 013216 - Construction Progress Schedule.

2. Coordinate with Contractor's construction schedule and schedule of values.
3. Format schedule to allow tracking of status of submittals throughout duration of construction.
4. Arrange information to include scheduled date for initial submittal, specification number and title, submittal category (for review or for information), description of item of work covered, and role and name of subcontractor.
5. Account for time required for preparation, review, manufacturing, fabrication and delivery when establishing submittal delivery and review deadline dates.
    a. For assemblies, equipment, systems comprised of multiple components and/or requiring detailed coordination with other work, allow for additional time to make corrections or revisions to initial submittals, and time for their review.

3.10 SUBMITTALS FOR REVIEW

A. When the following are specified in individual sections, submit them for review:
    1. Product data.
    2. Shop drawings.
    3. Samples for selection.
    4. Samples for verification.

B. Submit to Architect for review for the limited purpose of checking for compliance with information given and the design concept expressed in Contract Documents.

C. Samples will be reviewed for aesthetic, color, or finish selection.

D. After review, provide copies and distribute in accordance with SUBMITTAL PROCEDURES article below and for record documents purposes described in Section 017800 - Closeout Submittals.

3.11 SUBMITTALS FOR INFORMATION

A. When the following are specified in individual sections, submit them for information:
    1. Design data.
    2. Certificates.
    3. Test reports.
    4. Inspection reports.
    5. Manufacturer's instructions.
    6. Manufacturer's field reports.
    7. Other types indicated.

B. Submit for Architect's knowledge as contract administrator or for Owner.

3.12 SUBMITTALS FOR PROJECT CLOSEOUT

A. Submit Correction Punch List for Substantial Completion.

B. Submit Final Correction Punch List for Substantial Completion.

C. When the following are specified in individual sections, submit them at project closeout in compliance with requirements of Section 017800 - Closeout Submittals:
    1. Project record documents.
    2. Operation and maintenance data.
    3. Warranties.
    4. Bonds.
    5. Other types as indicated.

D. Submit for Owner's benefit during and after project completion.

3.13 NUMBER OF COPIES OF SUBMITTALS

A. Electronic Documents: Submit one electronic copy in PDF format; an electronically-marked up file will be returned. Create PDFs at native size and right-side up; illegible files will be rejected.

B. Samples: Submit the number specified in individual specification sections; one of which will be retained by Architect.

1. After review, produce duplicates.
2. Retained samples will not be returned to Contractor unless specifically so stated.

3.14 SUBMITTAL PROCEDURES

A. General Requirements:
   1. Use a single transmittal for related items.
   2. Transmit using approved form.
      a. Use form generated by Electronic Document Submittal Service software.
   3. Sequentially identify each item. For revised submittals use original number and a sequential numerical suffix.
   4. Identify: Project; Contractor; subcontractor or supplier; pertinent drawing and detail number; and specification section number and article/paragraph, as appropriate on each copy.
   5. Apply Contractor's stamp, signed or initialed certifying that review, approval, verification of products required, field dimensions, adjacent construction work, and coordination of information is in accordance with the requirements of the work and Contract Documents.
      a. Submittals from sources other than the Contractor, or without Contractor's stamp will not be acknowledged, reviewed, or returned.
   6. Deliver each submittal on date noted in submittal schedule, unless an earlier date has been agreed to by all affected parties, and is of the benefit to the project.
      a. Deliver submittals to Gramoll Construction at business address.
   7. Schedule submittals to expedite the Project, and coordinate submission of related items.
      a. For each submittal for review, allow 15 days excluding delivery time to and from the Contractor.
      b. For sequential reviews involving Architect's consultants, Owner, or another affected party, allow an additional 7 days.
   8. Identify variations from Contract Documents and product or system limitations that may be detrimental to successful performance of the completed work.
   9. Provide space for Contractor and Architect review stamps.
   10. When revised for resubmission, identify all changes made since previous submission.

B. Product Data Procedures:
   1. Submit only information required by individual specification sections.
   2. Collect required information into a single submittal.
   3. Do not submit (Material) Safety Data Sheets for materials or products.

C. Shop Drawing Procedures:
   1. Prepare accurate, drawn-to-scale, original shop drawing documentation by interpreting Contract Documents and coordinating related work.
   2. Do not reproduce Contract Documents to create shop drawings.
   3. Generic, non-project-specific information submitted as shop drawings do not meet the requirements for shop drawings.

D. Samples Procedures:
   1. Transmit related items together as single package.
   2. Identify each item to allow review for applicability in relation to shop drawings showing installation locations.
   3. Include with transmittal high-resolution image files of samples to facilitate electronic review and approval. Provide separate submittal page for each item image.

3.15 SUBMITTAL REVIEW

A. Submittals for Review: Architect will review each submittal, and approve, or take other appropriate action.

B. Submittals for Information: Architect will acknowledge receipt and review. See below for actions to be taken.

C. Architect's actions will be reflected by marking each returned submittal using virtual stamp on electronic submittals.
   1. Notations may be made directly on submitted items and/or listed on appended Submittal Review cover sheet.

D. Architect's and consultants' actions on items submitted for review:
   1. Authorizing purchasing, fabrication, delivery, and installation:
      a. "Approved", or language with same legal meaning.
      b. "Approved as Noted, Resubmission not required", or language with same legal meaning.
         1) At Contractor's option, submit corrected item, with review notations acknowledged and incorporated.
      c. "Approved as Noted, Resubmit for Record", or language with same legal meaning.
   2. Not Authorizing fabrication, delivery, and installation:

E. Architect's and consultants' actions on items submitted for information:
   1. Items for which no action was taken:
      a. "Received" - to notify the Contractor that the submittal has been received for record only.
   2. Items for which action was taken:
      a. "Reviewed" - no further action is required from Contractor.

END OF SECTION 013000

SECTION 014000
QUALITY REQUIREMENTS

PART 1 GENERAL

1.01 SECTION INCLUDES

A. Submittals.

B. Quality assurance.

C. References and standards.

D. Testing and inspection agencies and services.

E. Contractor's design-related professional design services.

F. Control of installation.

G. Mock-ups.

H. Tolerances.

I. Manufacturers' field services.

J. Defect Assessment.

1.02 RELATED REQUIREMENTS

A. Section 012100 - Allowances: Allowance for payment of testing services.

1.03 REFERENCE STANDARDS

A. ASTM C1021 - Standard Practice for Laboratories Engaged in Testing of Building Sealants; 2008 (Reapproved 2023).

B. ASTM C1077 - Standard Practice for Agencies Testing Concrete and Concrete Aggregates for Use in Construction and Criteria for Testing Agency Evaluation; 2024.

C. ASTM C1093 - Standard Practice for Accreditation of Testing Agencies for Masonry; 2023.

D. ASTM D3740 - Standard Practice for Minimum Requirements for Agencies Engaged in Testing and/or Inspection of Soil and Rock as Used in Engineering Design and Construction; 2023.

E. ASTM E329 - Standard Specification for Agencies Engaged in Construction Inspection, Testing, or Special Inspection; 2023.

F. ASTM E543 - Standard Specification for Agencies Performing Nondestructive Testing; 2021.

G. ASTM E699 - Standard Specification for Agencies Involved in Testing, Quality Assurance, and Evaluating of Manufactured Building Components; 2016.

1.04 DEFINITIONS

A. Contractor's Quality Control Plan: Contractor's management plan for executing the Contract for Construction.

B. Contractor's Professional Design Services: Design of some aspect or portion of the project by party other than the design professional of record. Provide these services as part of the Contract for Construction.

1. Design Services Types Required:
    a. Design-Related: Design services explicitly required to be performed by another design professional due to highly-technical and/or specialized nature of a portion of the project. Services primarily involve engineering analysis, calculations, and design, and are not intended to alter the aesthetic aspects of the design.

1.05 CONTRACTOR'S DESIGN-RELATED PROFESSIONAL DESIGN SERVICES

A. Coordination: Contractor's professional design services are subject to requirements of project's Conditions for Construction Contract.

B. Base design on performance and/or design criteria indicated in individual specification sections.

C. Scope of Contractor's Professional Design Services: Provide for the following items of work:
   1. Sprinkler Layout: Coordinate with ceiling installation, detailed pipe layout, and hydraulic calculations as described in Section 211300 - Fire-Suppression Sprinkler Systems.

1.06 SUBMITTALS

A. See Section 013000 - Administrative Requirements, for submittal procedures.

B. Certificates: When specified in individual specification sections, submit certification by the manufacturer and Contractor or installation/application subcontractor to Architect, in quantities specified for Product Data.
   1. Indicate material or product complies with or exceeds specified requirements. Submit supporting reference data, affidavits, and certifications as appropriate.

1.07 QUALITY ASSURANCE

A. Contractor's Quality Control (CQC) Plan:
   1. Prior to start of work, submit a comprehensive plan describing how contract deliverables will be produced. Tailor CQC plan to specific requirements of the project. Include the following information:
      a. Management Approach: Define, describe, and include in the plan specific methodologies used in executing the work.

1.08 REFERENCES AND STANDARDS

A. For products and workmanship specified by reference to a document or documents not included in the Project Manual, also referred to as reference standards, comply with requirements of the standard, except when more rigid requirements are specified or are required by applicable codes.

B. Comply with reference standard of date of issue current on date of Contract Documents, except where a specific date is established by applicable code.

C. Obtain copies of standards where required by product specification sections.

D. Maintain copy at project site during submittals, planning, and progress of the specific work, until Substantial Completion.

E. Should specified reference standards conflict with Contract Documents, request clarification from Architect before proceeding.

F. Neither the contractual relationships, duties, or responsibilities of the parties in Contract nor those of Architect shall be altered from Contract Documents by mention or inference otherwise in any reference document.

1.09 TESTING AND INSPECTION AGENCIES AND SERVICES

A. Owner will employ services of an independent testing agency to perform certain specified testing; payment for cost of services will be derived from allowance specified in Section 012100; see Section 012100 and applicable sections for description of services included in allowance.

B. As indicated in individual specification sections, Owner or Contractor shall employ and pay for services of an independent testing agency to perform other specified testing.

C. Employment of agency in no way relieves Contractor of obligation to perform Work in accordance with requirements of Contract Documents.

D. Contractor Employed Agency:
   1. Testing agency: Comply with requirements of ASTM E329, ASTM E543, ASTM E699, ASTM C1021, ASTM C1077, ASTM C1093, and ASTM D3740.

PART 3 EXECUTION

2.01 CONTROL OF INSTALLATION

A. Monitor quality control over suppliers, manufacturers, products, services, site conditions, and workmanship, to produce work of specified quality.

B. Comply with manufacturers' instructions, including each step in sequence.

C. Should manufacturers' instructions conflict with Contract Documents, request clarification from Architect before proceeding.

D. Comply with specified standards as minimum quality for the work except where more stringent tolerances, codes, or specified requirements indicate higher standards or more precise workmanship.

E. Have work performed by persons qualified to produce required and specified quality.

F. Verify that field measurements are as indicated on shop drawings or as instructed by the manufacturer.

G. Secure products in place with positive anchorage devices designed and sized to withstand stresses, vibration, physical distortion, and disfigurement.

2.02 MOCK-UPS

A. Accepted mock-ups establish the standard of quality the Architect will use to judge the Work.

B. Tests shall be performed under provisions identified in this section and identified in the respective product specification sections.

C. Assemble and erect specified items with specified attachment and anchorage devices, flashings, seals, and finishes.

D. Architect will use accepted mock-ups as a comparison standard for the remaining Work.

E. Where mock-up has been accepted by Architect and is specified in product specification sections to be removed, protect mock-up throughout construction, remove mock-up and clear area when directed to do so by Architect.

2.03 TOLERANCES

A. Monitor fabrication and installation tolerance control of products to produce acceptable Work. Do not permit tolerances to accumulate.

B. Comply with manufacturers' tolerances. Should manufacturers' tolerances conflict with Contract Documents, request clarification from Architect before proceeding.

C. Adjust products to appropriate dimensions; position before securing products in place.

2.04 TESTING AND INSPECTION

A. Testing Agency Duties:
   1. Provide qualified personnel at site. Cooperate with Architect and Contractor in performance of services.
   2. Perform specified sampling and testing of products in accordance with specified standards.
   3. Ascertain compliance of materials and mixes with requirements of Contract Documents.
   4. Promptly notify Architect and Contractor of observed irregularities or non-compliance of Work or products.
   5. Perform additional tests and inspections required by Architect.
   6. Submit reports of all tests/inspections specified.

B. Limits on Testing/Inspection Agency Authority:
   1. Agency may not release, revoke, alter, or enlarge on requirements of Contract Documents.
   2. Agency may not approve or accept any portion of the Work.
   3. Agency may not assume any duties of Contractor.
   4. Agency has no authority to stop the Work.

C. Contractor Responsibilities:
   1. Deliver to agency at designated location, adequate samples of materials proposed to be used that require testing, along with proposed mix designs.

2. Cooperate with laboratory personnel, and provide access to the Work and to manufacturers' facilities.
3. Provide incidental labor and facilities:
    a. To provide access to Work to be tested/inspected.
    b. To obtain and handle samples at the site or at source of Products to be tested/inspected.
    c. To facilitate tests/inspections.
    d. To provide storage and curing of test samples.
4. Notify Architect and laboratory 24 hours prior to expected time for operations requiring testing/inspection services.
5. Employ services of an independent qualified testing laboratory and pay for additional samples, tests, and inspections required by Contractor beyond specified requirements.
6. Arrange with Owner's agency and pay for additional samples, tests, and inspections required by Contractor beyond specified requirements.

D. Re-testing required because of non-compliance with specified requirements shall be performed by the same agency on instructions by Architect.

E. Re-testing required because of non-compliance with specified requirements shall be paid for by Contractor.

2.05 MANUFACTURERS' FIELD SERVICES

A. When specified in individual specification sections, require material or product suppliers or manufacturers to provide qualified staff personnel to observe site conditions, conditions of surfaces and installation, quality of workmanship, start-up of equipment, test, adjust, and balance equipment as applicable, and to initiate instructions when necessary.

B. Report observations and site decisions or instructions given to applicators or installers that are supplemental or contrary to manufacturers' written instructions.

2.06 DEFECT ASSESSMENT

A. Replace Work or portions of the Work not complying with specified requirements.

B. If, in the opinion of Owner, it is not practical to remove and replace the work, Owner will direct an appropriate remedy or adjust payment.

END OF SECTION 014000

SECTION 014100
REGULATORY REQUIREMENTS

PART 1 GENERAL

1.01 SUMMARY OF REFERENCE STANDARDS

A. Regulatory requirements applicable to this project are the following:

B. State of Utah DFCM High Performance Standards

C. ADA Standards - 2010 ADA Standards for Accessible Design; 2010.

D. 29 CFR 1910 - Occupational Safety and Health Standards; Current Edition.

E. ICC A117.1 - Accessible and Usable Buildings and Facilities; 2017.

F. ICC (IFC) - International Fire Code; Most Recent Edition Adopted by Authority Having Jurisdiction, Including All Applicable Amendments and Supplements.

G. NFPA 101 - Life Safety Code; Most Recent Edition Adopted by Authority Having Jurisdiction, Including All Applicable Amendments and Supplements.

H. ICC (IBC) - International Building Code; Most Recent Edition Adopted by Authority Having Jurisdiction, Including All Applicable Amendments and Supplements.

I. ICC (IPC) - International Plumbing Code; Most Recent Edition Adopted by Authority Having Jurisdiction, Including All Applicable Amendments and Supplements.

J. ICC (IMC) - International Mechanical Code; Most Recent Edition Adopted by Authority Having Jurisdiction, Including All Applicable Amendments and Supplements.

K. ICC (IFGC) - International Fuel Gas Code; Most Recent Edition Adopted by Authority Having Jurisdiction, Including All Applicable Amendments and Supplements.

L. NFPA 70 - National Electrical Code; Most Recent Edition Adopted by Authority Having Jurisdiction, Including All Applicable Amendments and Supplements.

M. ICC (IECC) - International Energy Conservation Code; Most Recent Edition Adopted by Authority Having Jurisdiction, Including All Applicable Amendments and Supplements.

1.02 RELATED REQUIREMENTS

A. Section 014000 - Quality Requirements.

PART 2 PRODUCTS - NOT USED

PART 3 EXECUTION - NOT USED

END OF SECTION 014100

This page intentionally left blank

SECTION 015000
TEMPORARY FACILITIES AND CONTROLS

PART 1 GENERAL

1.01 SECTION INCLUDES

A. Temporary sanitary facilities.

B. Security requirements.

C. Vehicular access and parking.

D. Waste removal facilities and services.

E. Project identification sign.

1.02 RELATED REQUIREMENTS

A. Section 015100 - Temporary Utilities.

B. Section 015213 - Field Offices and Sheds.

1.03 TEMPORARY UTILITIES - SEE SECTION 015100

A. Owner will provide the following:
   1. Electrical power, consisting of connection to existing facilities.
   2. Water supply, consisting of connection to existing facilities.

1.04 TEMPORARY SANITARY FACILITIES

A. Provide and maintain required facilities and enclosures. Provide at time of project mobilization.

B. Maintain daily in clean and sanitary condition.

1.05 BARRIERS

A. Provide barriers to prevent unauthorized entry to construction areas, to prevent access to areas that could be hazardous to workers or the public, to allow for owner's use of site and to protect existing facilities and adjacent properties from damage from construction operations and demolition.

B. Protect non-owned vehicular traffic, stored materials, site, and structures from damage.

1.06 FENCING

A. Construction: Contractor's option.

B. Provide 6 foot (1.8 m) high fence around construction site; equip with vehicular and pedestrian gates with locks.

1.07 SECURITY - SEE SECTION 013553

A. Provide security and facilities to protect Work, and Owner's operations from unauthorized entry, vandalism, or theft.

B. Coordinate with Owner's security program.

1.08 VEHICULAR ACCESS AND PARKING

A. Coordinate access and haul routes with governing authorities and Owner.

B. Provide and maintain access to fire hydrants, free of obstructions.

C. Provide means of removing mud from vehicle wheels before entering streets.

D. Provide temporary parking areas to accommodate construction personnel. When site space is not adequate, provide additional off-site parking.

1.09 WASTE REMOVAL

A. See Section 017419 - Construction Waste Management and Disposal, for additional requirements.

B. Provide waste removal facilities and services as required to maintain the site in clean and orderly condition.

C. Provide containers with lids. Remove trash from site periodically.

D. If materials to be recycled or re-used on the project must be stored on-site, provide suitable non-combustible containers; locate containers holding flammable material outside the structure unless otherwise approved by the authorities having jurisdiction.

E. Open free-fall chutes are not permitted. Terminate closed chutes into appropriate containers with lids.

1.10 PROJECT IDENTIFICATION

A. Provide project identification sign of design and construction indicated on drawings.

B. Erect on site at location indicated.

C. No other signs are allowed without Owner permission except those required by law.

1.11 FIELD OFFICES - SEE SECTION 015213

A. Office: Weathertight, with lighting, electrical outlets, heating, cooling equipment, and equipped with sturdy furniture, drawing rack, and drawing display table.

B. Provide space for Project meetings, with table and chairs to accommodate 6 persons.

C. Locate offices a minimum distance of 30 feet (10 m) from existing and new structures.

1.12 REMOVAL OF UTILITIES, FACILITIES, AND CONTROLS

A. Remove temporary utilities, equipment, facilities, materials, prior to Date of Substantial Completion inspection.

B. Remove underground installations to a minimum depth of 2 feet (600 mm). Grade site as indicated.

C. Clean and repair damage caused by installation or use of temporary work.

PART 2 PRODUCTS - NOT USED

PART 3 EXECUTION - NOT USED

END OF SECTION 015000

SECTION 015100
TEMPORARY UTILITIES

PART 1 GENERAL

1.01 SECTION INCLUDES

A. Temporary Utilities: Provision of electricity, lighting, and water.

1.02 REFERENCE STANDARDS

A. 29 CFR 1926 - Safety and Health Regulations for Construction; Current Edition.

1.03 TEMPORARY ELECTRICITY

A. Cost: By Owner.

B. Connect to Owner's existing power service.
   1. Do not disrupt Owner's need for continuous service.

C. Provide temporary electric feeder from existing building electrical service at location as directed.

D. Power Service Characteristics: 115 volt, 50 ampere, three phase, four wire.

E. Complement existing power service capacity and characteristics as required.

F. Provide power outlets for construction operations, with branch wiring and distribution boxes located at each floor. Provide flexible power cords as required.

G. Provide main service disconnect and over-current protection at convenient location and meter.

H. Provide adequate distribution equipment, wiring, and outlets to provide single phase branch circuits for power and lighting.

1.04 TEMPORARY LIGHTING FOR CONSTRUCTION PURPOSES

A. Provide and maintain LED, compact fluorescent, or high-intensity discharge lighting as suitable for the application for construction operations in accordance with requirements of 29 CFR 1926 and authorities having jurisdiction.

B. Provide branch wiring from power source to distribution boxes with lighting conductors, pigtails, and lamps as required.

C. Maintain lighting and provide routine repairs.

1.05 TEMPORARY WATER SERVICE

A. Cost of Water Used: By Owner.

B. Provide and maintain suitable quality water service for construction operations at time of project mobilization.

C. Connect to existing water source.

PART 2 PRODUCTS - NOT USED

PART 3 EXECUTION - NOT USED

END OF SECTION 015100

This page intentionally left blank

SECTION 015213
FIELD OFFICES AND SHEDS

PART 1 GENERAL

1.01 SECTION INCLUDES

A. Temporary field offices for use of Contractor.

1.02 RELATED REQUIREMENTS

A. Section 015000 - Temporary Facilities and Controls:
   1. Temporary sanitary facilities required by law.

PART 2 PRODUCTS

2.01 MATERIALS, EQUIPMENT, FURNISHINGS

2.02 CONSTRUCTION

A. Portable or mobile buildings, or buildings constructed with floors raised above ground, securely fixed to foundations, with steps and landings at entrance doors.

B. Construction: Structurally sound, secure, weather tight enclosures for office. Maintain during progress of Work; remove when no longer needed.

C. Temperature Transmission Resistance of Floors, Walls, and Ceilings: Compatible with occupancy requirements.

D. Exterior Materials: Weather resistant, finished in one color.

E. Interior Materials in Offices: Sheet type materials for walls and ceilings, prefinished or painted; resilient floors and bases.

F. Lighting for Offices: 50 fc (538 lx) at desk top height, exterior lighting at entrance doors.

2.03 ENVIRONMENTAL CONTROL

A. Heating, Cooling, and Ventilating: Automatic equipment to maintain comfort conditions.

2.04 CONTRACTOR OFFICE AND FACILITIES

A. Size: For Contractor's needs and to provide space for project meetings.

B. Other Furnishings: Contractor's option.

C. Equipment: Six adjustable band protective helmets for visitors, one 10 inch (250 mm) outdoor weather thermometer and six eye protection PPE.

PART 3 EXECUTION

3.01 PREPARATION

A. Fill and grade sites for temporary structures to provide drainage away from buildings.

3.02 INSTALLATION

A. Install office spaces ready for occupancy 15 days after date fixed in Notice to Proceed.

3.03 MAINTENANCE AND CLEANING

3.04 REMOVAL

A. At completion of Work remove buildings, foundations, utility services, and debris. Restore areas.

END OF SECTION 015213

This page intentionally left blank

SECTION 015713
TEMPORARY EROSION AND SEDIMENT CONTROL

PART 1 GENERAL

1.01 SECTION INCLUDES

A. Prevention of erosion due to construction activities.

B. Prevention of sedimentation of waterways, open drainage ways, and storm and sanitary sewers due to construction activities.

C. Restoration of areas eroded due to insufficient preventive measures.

D. Performance bond.

E. Compensation of Owner for fines levied by authorities having jurisdiction due to non-compliance by Contractor.

1.02 RELATED REQUIREMENTS

A. APWA Section 311000 - Site Clearing: Limits on clearing; disposition of vegetative clearing debris.

B. Section 321500 - Aggregate Surfacing: Temporary and permanent roadways.

1.03 REFERENCE STANDARDS

A. ASTM D4355/D4355M - Standard Test Method for Deterioration of Geotextiles by Exposure to Light, Moisture, and Heat in a Xenon Arc-Type Apparatus; 2021.

B. ASTM D4491/D4491M - Standard Test Methods for Water Permeability of Geotextiles by Permittivity; 2022.

C. ASTM D4533/D4533M - Standard Test Method for Trapezoid Tearing Strength of Geotextiles; 2015 (Reapproved 2023).

D. ASTM D4632/D4632M - Standard Test Method for Grab Breaking Load and Elongation of Geotextiles; 2015a (Reapproved 2023).

E. ASTM D4751 - Standard Test Methods for Determining Apparent Opening Size of a Geotextile; 2021a.

F. ASTM D4873/D4873M - Standard Guide for Identification, Storage, and Handling of Geosynthetic Rolls and Samples; 2017 (Reapproved 2021).

G. EPA (NPDES) - National Pollutant Discharge Elimination System (NPDES), Construction General Permit; Current Edition.

1.04 PERFORMANCE REQUIREMENTS

A. Comply with requirements of EPA (NPDES) for erosion and sedimentation control, as specified by the NPDES, for Phases I and II, and in compliance with requirements of Construction General Permit (CGP), whether the project is required by law to comply or not.

B. Develop and follow an Erosion and Sedimentation Prevention Plan and submit periodic inspection reports.

C. Do not begin clearing, grading, or other work involving disturbance of ground surface cover until applicable permits have been obtained; furnish all documentation required to obtain applicable permits.

D. Provide to Owner a Performance Bond covering erosion and sedimentation preventive measures only, in an amount equal to 100 percent of the cost of erosion and sedimentation control work.

E. Timing: Put preventive measures in place as soon as possible after disturbance of surface cover and before precipitation occurs.

F. Storm Water Runoff: Control increased storm water runoff due to disturbance of surface cover due to construction activities for this project.

1. Prevent runoff into storm and sanitary sewer systems, including open drainage channels, in excess of actual capacity or amount allowed by authorities having jurisdiction, whichever is less.
2. Anticipate runoff volume due to the most extreme short term and 24-hour rainfall events that might occur in 25 years.

G. Erosion On Site: Minimize wind, water, and vehicular erosion of soil on project site due to construction activities for this project.
1. Control movement of sediment and soil from temporary stockpiles of soil.
2. Prevent development of ruts due to equipment and vehicular traffic.
3. If erosion occurs due to non-compliance with these requirements, restore eroded areas at no cost to Owner.

H. Erosion Off Site: Prevent erosion of soil and deposition of sediment on other properties caused by water leaving the project site due to construction activities for this project.
1. Prevent windblown soil from leaving the project site.
2. Prevent tracking of mud onto public roads outside site.
3. Prevent mud and sediment from flowing onto sidewalks and pavements.
4. If erosion occurs due to non-compliance with these requirements, restore eroded areas at no cost to Owner.

I. Sedimentation of Waterways On Site: Prevent sedimentation of waterways on the project site, including rivers, streams, lakes, ponds, open drainage ways, storm sewers, and sanitary sewers.
1. If sedimentation occurs, install or correct preventive measures immediately at no cost to Owner; remove deposited sediments; comply with requirements of authorities having jurisdiction.
2. If sediment basins are used as temporary preventive measures, pump dry and remove deposited sediment after each storm.

J. Sedimentation of Waterways Off Site: Prevent sedimentation of waterways off the project site, including rivers, streams, lakes, ponds, open drainage ways, storm sewers, and sanitary sewers.
1. If sedimentation occurs, install or correct preventive measures immediately at no cost to Owner; remove deposited sediments; comply with requirements of authorities having jurisdiction.

K. Open Water: Prevent standing water that could become stagnant.

L. Maintenance: Maintain temporary preventive measures until permanent measures have been established.

1.05 SUBMITTALS

A. See Section 013000 - Administrative Requirements, for submittal procedures.

B. Erosion and Sedimentation Control Plan:
1. Include:
a. Site plan identifying soils and vegetation, existing erosion problems, and areas vulnerable to erosion due to topography, soils, vegetation, or drainage.
b. Site plan showing grading; new improvements; temporary roads, traffic accesses, and other temporary construction; and proposed preventive measures.
c. Where extensive areas of soil will be disturbed, include storm water flow and volume calculations, soil loss predictions, and proposed preventive measures.
d. Schedule of temporary preventive measures, in relation to ground disturbing activities.
e. Other information required by law.
f. Format required by law is acceptable, provided any additional information specified is also included.
2. Obtain the approval of the Plan by authorities having jurisdiction.

3. Obtain the approval of the Plan by Owner.

C. Certificate: Mill certificate for silt fence fabric attesting that fabric and factory seams comply with specified requirements, signed by legally authorized official of manufacturer; indicate actual minimum average roll values; identify fabric by roll identification numbers.

D. Inspection Reports: Submit report of each inspection; identify each preventive measure, indicate condition, and specify maintenance or repair required and accomplished.

PART 2 PRODUCTS

2.01 MATERIALS

A. Bales: Air dry, rectangular straw bales.
1. Cross Section: 14 by 18 inches (350 by 450 mm), minimum.
2. Bindings: Wire or string, around long dimension.

B. Bale Stakes: One of the following, minimum 3 feet (1 m) long:
1. Steel U- or T-section, with minimum mass of 1.33 pound per linear foot (1.98 kg per linear m).
2. Wood, 2 by 2 inches (50 by 50 mm) in cross section.

C. Silt Fence Fabric: Polypropylene geotextile resistant to common soil chemicals, mildew, and insects; non-biodegradable; in longest lengths possible; fabric including seams with the following minimum average roll lengths:
1. Average Opening Size: 30 U.S. Std. Sieve (0.600 mm), maximum, when tested in accordance with ASTM D4751.
2. Permittivity: 0.05 sec^-1, minimum, when tested in accordance with ASTM D4491/D4491M.
3. Ultraviolet Resistance: Retaining at least 70 percent of tensile strength, when tested in accordance with ASTM D4355/D4355M after 500 hours exposure.
4. Tensile Strength: 100 pounds-force (450 N), minimum, in cross-machine direction; 124 pounds-force (550 N), minimum, in machine direction; when tested in accordance with ASTM D4632/D4632M.
5. Elongation: 15 to 30 percent, when tested in accordance with ASTM D4632/D4632M.
6. Tear Strength: 55 pounds-force (245 N), minimum, when tested in accordance with ASTM D4533/D4533M.
7. Color: Manufacturer's standard, with embedment and fastener lines preprinted.

D. Silt Fence Posts: One of the following, minimum 5 feet (1500 mm) long:
1. Steel U- or T-section, with minimum mass of 1.33 pound per linear foot (1.98 kg per linear m).

E. Gravel: See Section 312323 for aggregate.

PART 3 EXECUTION

3.01 EXAMINATION

A. Examine site and identify existing features that contribute to erosion resistance; maintain such existing features to greatest extent possible.

3.02 PREPARATION

A. Schedule work so that soil surfaces are left exposed for the minimum amount of time.

3.03 SCOPE OF PREVENTIVE MEASURES

A. In all cases, if permanent erosion resistant measures have been installed temporary preventive measures are not required.

B. Construction Entrances: Traffic-bearing aggregate surface.
1. Width: As required; 20 feet (7 m), minimum.
2. Length: 50 feet (16 m), minimum.
3. Provide at each construction entrance from public right-of-way.

4. Where necessary to prevent tracking of mud onto right-of-way, provide wheel washing area out of direct traffic lane, with drain into sediment trap or basin.

C. Linear Sediment Barriers: Made of silt fences.
   1. Provide linear sediment barriers:
      a. Along downhill perimeter edge of disturbed areas, including soil stockpiles.
      b. Across the entrances to culverts that receive runoff from disturbed areas.
   2. Space sediment barriers with the following maximum slope length upslope from barrier:
      a. Slope of Less Than 2 Percent: 100 feet (30 m)..
      b. Slope Between 2 and 5 Percent: 75 feet (23 m).
      c. Slope Between 5 and 10 Percent: 50 feet (15 m).
      d. Slope Between 10 and 20 Percent: 25 feet (7.5 m).
      e. Slope Over 20 Percent: 15 feet (4.5 m).

D. Storm Drain Curb Inlet Sediment Trap: Protect each curb inlet using one of the following measures:
   1. Filter fabric wrapped around hollow concrete blocks blocking entire inlet face area; use one piece of fabric wrapped at least 1-1/2 times around concrete blocks and secured to prevent dislodging; orient cores of blocks so runoff passes into inlet.
   2. Straw bale row blocking entire inlet face area; anchor into pavement.

E. Storm Drain Drop Inlet Sediment Traps: As detailed on drawings.

F. Temporary Splash Pads: Stone aggregate over filter fabric; size to suit application; provide at downspout outlets and storm water outlets.

G. Soil Stockpiles: Protect using one of the following measures:
   1. Cover with polyethylene film, secured by placing soil on outer edges.
   2. Cover with mulch at least 4 inches (100 mm) thickness of pine needles, sawdust, bark, wood chips, or shredded leaves, or 6 inches (150 mm) of straw or hay.

H. Mulching: Use only for areas that may be subjected to erosion for less than 6 months.

I. Temporary Seeding: Use where temporary vegetated cover is required.

3.04 INSTALLATION

A. Traffic-Bearing Aggregate Surface:
   1. Excavate minimum of 6 inches (150 mm).
   2. Place geotextile fabric full width and length, with minimum 12 inch (300 mm) overlap at joints.
   3. Place and compact at least 6 inches (150 mm) of 1 1/2 to 3 1/2 inch (40 to 90 mm) diameter stone.

B. Silt Fences:
   1. Store and handle fabric in accordance with ASTM D4873/D4873M.
   2. Where slope gradient is less than 3:1 or barriers will be in place less than 6 months, use nominal 16 inch (405 mm) high barriers with minimum 36 inch (905 mm) long posts spaced at 6 feet (1830 mm) maximum, with fabric embedded at least 4 inches (100 mm) in ground.
   3. Where slope gradient is steeper than 3:1 or barriers will be in place over 6 months, use nominal 28 inch (710 mm) high barriers, minimum 48 inch (1220 mm) long posts spaced at 6 feet (1830 mm) maximum, with fabric embedded at least 6 inches (150 mm) in ground.
   4. Where slope gradient is steeper than 3:1 and vertical height of slope between barriers is more than 20 feet (6 m), use nominal 32 inch (810 mm) high barriers with woven wire reinforcement and steel posts spaced at 4 feet (1220 mm) maximum, with fabric embedded at least 6 inches (150 mm) in ground.
   5. Install with top of fabric at nominal height and embedment as specified.
   6. Do not splice fabric width; minimize splices in fabric length; splice at post only, overlapping at least 18 inches (460 mm), with extra post.

7. Fasten fabric to steel posts using wire, nylon cord, or integral pockets.
8. Wherever runoff will flow around end of barrier or over the top, provide temporary splash pad or other outlet protection; at such outlets in the run of the barrier, make barrier not more than 12 inches (300 mm) high with post spacing not more than 4 feet (1220 mm).

C. Straw Bale Rows:
1. Install bales in continuous rows with ends butting tightly, with one bale at each end of row turned uphill.
2. Install bales so that bindings are not in contact with the ground.
3. Embed bales at least 4 inches (100 mm) in the ground.
4. Anchor bales with at least two stakes per bale, driven at least 18 inches (450 mm) into the ground; drive first stake in each bale toward the previously placed bale to force bales together.
5. Fill gaps between ends of bales with loose straw wedged tightly.
6. Place soil excavated for trench against bales on the upslope side of the row, compacted.

3.05 MAINTENANCE

A. Inspect preventive measures weekly, within 24 hours after the end of any storm that produces 0.5 inches (13 mm) or more rainfall at the project site, and daily during prolonged rainfall.

B. Repair deficiencies immediately.

C. Silt Fences:
1. Promptly replace fabric that deteriorates unless need for fence has passed.
2. Remove silt deposits that exceed one-third of the height of the fence.
3. Repair fences that are undercut by runoff or otherwise damaged, whether by runoff or other causes.

D. Straw Bale Rows:
1. Promptly replace bales that fall apart or otherwise deteriorate unless need has passed.
2. Remove silt deposits that exceed one-half of the height of the bales.
3. Repair bale rows that are undercut by runoff or otherwise damaged, whether by runoff or other causes.

E. Clean out temporary sediment control structures weekly and relocate soil on site.

F. Place sediment in appropriate locations on site; do not remove from site.

3.06 CLEAN UP

A. Remove temporary measures after permanent measures have been installed, unless permitted to remain by Architect.

B. Clean out temporary sediment control structures that are to remain as permanent measures.

C. Where removal of temporary measures would leave exposed soil, shape surface to an acceptable grade and finish to match adjacent ground surfaces.

END OF SECTION 015713

This page intentionally left blank

SECTION 016000
PRODUCT REQUIREMENTS

PART 1 GENERAL

1.01 SECTION INCLUDES

A. General product requirements.

B. Transportation, handling, storage and protection.

C. Product option requirements.

D. Substitution limitations.

E. Procedures for Owner-supplied products.

F. Maintenance materials, including extra materials, spare parts, tools, and software.

1.02 RELATED REQUIREMENTS

A. Section 011000 - Summary: Identification of Owner-supplied products.

B. Section 012500 - Substitution Procedures: Substitutions made during procurement and/or construction phases.

C. Section 017419 - Construction Waste Management and Disposal: Waste disposal requirements potentially affecting product selection, packaging and substitutions.

1.03 SUBMITTALS

A. Product Data Submittals: Submit manufacturer's standard published data. Mark each copy to identify applicable products, models, options, and other data. Supplement manufacturers' standard data to provide information specific to this Project.

B. Shop Drawing Submittals: Prepared specifically for this Project; indicate utility and electrical characteristics, utility connection requirements, and location of utility outlets for service for functional equipment and appliances.

C. Sample Submittals: Illustrate functional and aesthetic characteristics of the product, with integral parts and attachment devices. Coordinate sample submittals for interfacing work.
   1. For selection from standard finishes, submit samples of the full range of the manufacturer's standard colors, textures, and patterns.

PART 2 PRODUCTS

2.01 NEW PRODUCTS

A. Provide new products unless specifically required or permitted by Contract Documents.

B. Use of products having any of the following characteristics is not permitted:
   1. Made using or containing CFC's or HCFC's.
   2. Containing lead, cadmium, or asbestos.

2.02 PRODUCT OPTIONS

A. Products Specified by Reference Standards or by Description Only: Use any product meeting those standards or description.

B. Products Specified by Naming One or More Manufacturers: Use a product of one of the manufacturers named and meeting specifications, no options or substitutions allowed.

C. Products Specified by Naming One or More Manufacturers with a Provision for Substitutions: Submit a request for substitution for any manufacturer not named.

2.03 MAINTENANCE MATERIALS

A. Furnish extra materials, spare parts, tools, and software of types and in quantities specified in individual specification sections.

B. Deliver to Project site; obtain receipt prior to final payment.

PART 3 EXECUTION

3.01 SUBSTITUTION LIMITATIONS

A. See Section 012500 - Substitution Procedures.

3.02 OWNER-SUPPLIED PRODUCTS

A. See Section 011000 - Summary for identification of Owner-supplied products.

B. Owner's Responsibilities:
   1. Arrange for and deliver Owner reviewed shop drawings, product data, and samples, to Contractor.
   2. Arrange and pay for product delivery to site.
   3. On delivery, inspect products jointly with Contractor.
   4. Submit claims for transportation damage and replace damaged, defective, or deficient items.
   5. Arrange for manufacturers' warranties, inspections, and service.

C. Contractor's Responsibilities:
   1. Review Owner reviewed shop drawings, product data, and samples.
   2. Receive and unload products at site; inspect for completeness or damage jointly with Owner.
   3. Handle, store, install and finish products.
   4. Repair or replace items damaged after receipt.

3.03 TRANSPORTATION AND HANDLING

A. Package products for shipment in manner to prevent damage; for equipment, package to avoid loss of factory calibration.

B. If special precautions are required, attach instructions prominently and legibly on outside of packaging.

C. Coordinate schedule of product delivery to designated prepared areas in order to minimize site storage time and potential damage to stored materials.

D. Transport and handle products in accordance with manufacturer's instructions.

E. Transport materials in covered trucks to prevent contamination of product and littering of surrounding areas.

F. Promptly inspect shipments to ensure that products comply with requirements, quantities are correct, and products are undamaged.

G. Provide equipment and personnel to handle products by methods to prevent soiling, disfigurement, or damage, and to minimize handling.

H. Arrange for the return of packing materials, such as wood pallets, where economically feasible.

3.04 STORAGE AND PROTECTION

A. Designate receiving/storage areas for incoming products so that they are delivered according to installation schedule and placed convenient to work area in order to minimize waste due to excessive materials handling and misapplication. See Section 017419.

B. Store and protect products in accordance with manufacturers' instructions.

C. Store with seals and labels intact and legible.

D. Store sensitive products in weathertight, climate-controlled enclosures in an environment favorable to product.

E. For exterior storage of fabricated products, place on sloped supports above ground.

F. Protect products from damage or deterioration due to construction operations, weather, precipitation, humidity, temperature, sunlight and ultraviolet light, dirt, dust, and other contaminants.

G. Comply with manufacturer's warranty conditions, if any.

H. Cover products subject to deterioration with impervious sheet covering. Provide ventilation to prevent condensation and degradation of products.

I. Prevent contact with material that may cause corrosion, discoloration, or staining.

J. Provide equipment and personnel to store products by methods to prevent soiling, disfigurement, or damage.

K. Arrange storage of products to permit access for inspection. Periodically inspect to verify products are undamaged and are maintained in acceptable condition.

END OF SECTION 016000

This page intentionally left blank

SECTION 017000
EXECUTION AND CLOSEOUT REQUIREMENTS

PART 1 GENERAL

1.01 SECTION INCLUDES

A. Examination, preparation, and general installation procedures.

B. Requirements for alterations work, including selective demolition, _____.

C. Pre-installation meetings.

D. Cutting and patching.

E. Surveying for laying out the work.

F. Cleaning and protection.

G. Starting of systems and equipment.

H. Demonstration and instruction of Owner personnel.

I. Closeout procedures, including Contractor's Correction Punch List, except payment procedures.

J. General requirements for maintenance service.

1.02 RELATED REQUIREMENTS

A. Section 011000 - Summary: Limitations on working in existing building; continued occupancy; work sequence; identification of salvaged and relocated materials.

B. Section 013000 - Administrative Requirements: Submittals procedures, Electronic document submittal service.

C. Section 017900 - Demonstration and Training: Demonstration of products and systems to be commissioned and where indicated in specific specification sections

D. Section 078400 - Firestopping.

1.03 SUBMITTALS

A. See Section 013000 - Administrative Requirements, for submittal procedures.

B. Survey work: Submit name, address, and telephone number of Surveyor before starting survey work.
   1. On request, submit documentation verifying accuracy of survey work.
   2. Submit a copy of site drawing signed by the Land Surveyor, that the elevations and locations of the work are in compliance with Contract Documents.
   3. Submit surveys and survey logs for the project record.

C. Cutting and Patching: Submit written request in advance of cutting or alteration that affects:
   1. Structural integrity of any element of Project.
   2. Integrity of weather exposed or moisture resistant element.
   3. Efficiency, maintenance, or safety of any operational element.
   4. Visual qualities of sight exposed elements.
   5. Work of Owner or separate Contractor.

1.04 QUALIFICATIONS

A. For surveying work, employ a professional engineer registered in the State in which the Project is located and acceptable to Architect. Submit evidence of surveyor's Errors and Omissions insurance coverage in the form of an Insurance Certificate. Employ only individual(s) trained and experienced in collecting and recording accurate data relevant to ongoing construction activities,

1.05 PROJECT CONDITIONS

A. Use of explosives is not permitted.

B. Protect site from puddling or running water. Provide water barriers as required to protect site from soil erosion.

C. Ventilate enclosed areas to assist cure of materials, to dissipate humidity, and to prevent accumulation of dust, fumes, vapors, or gases.

D. Erosion and Sediment Control: Plan and execute work by methods to control surface drainage from cuts and fills, from borrow and waste disposal areas. Prevent erosion and sedimentation.
   1. Provide temporary measures such as berms, dikes, and drains, to prevent water flow.

E. Noise Control: Provide methods, means, and facilities to minimize noise produced by construction operations.
   1. Outdoors: Limit conduct of especially noisy exterior work to the hours of 8 am to 5 pm.

1.06 COORDINATION

A. Coordinate scheduling, submittals, and work of the various sections of the Project Manual to ensure efficient and orderly sequence of installation of interdependent construction elements, with provisions for accommodating items installed later.

B. Notify affected utility companies and comply with their requirements.

C. Verify that utility requirements and characteristics of new operating equipment are compatible with building utilities. Coordinate work of various sections having interdependent responsibilities for installing, connecting to, and placing in service, such equipment.

D. Coordinate space requirements, supports, and installation of mechanical and electrical work that are indicated diagrammatically on drawings. Follow routing indicated for pipes, ducts, and conduit, as closely as practicable; place runs parallel with lines of building. Utilize spaces efficiently to maximize accessibility for other installations, for maintenance, and for repairs.

E. In finished areas except as otherwise indicated, conceal pipes, ducts, and wiring within the construction. Coordinate locations of fixtures and outlets with finish elements.

F. Coordinate completion and clean-up of work of separate sections.

G. After Owner occupancy of premises, coordinate access to site for correction of defective work and work not in accordance with Contract Documents, to minimize disruption of Owner's activities.

PART 2 PRODUCTS

2.01 PATCHING MATERIALS

A. New Materials: As specified in product sections; match existing products and work for patching and extending work.

B. Type and Quality of Existing Products: Determine by inspecting and testing products where necessary, referring to existing work as a standard.

C. Product Substitution: For any proposed change in materials, submit request for substitution described in Section 016000 - Product Requirements.

PART 3 EXECUTION

3.01 EXAMINATION

A. Verify that existing site conditions and substrate surfaces are acceptable for subsequent work. Start of work means acceptance of existing conditions.

B. Verify that existing substrate is capable of structural support or attachment of new work being applied or attached.

C. Examine and verify specific conditions described in individual specification sections.

D. Take field measurements before confirming product orders or beginning fabrication, to minimize waste due to over-ordering or misfabrication.

E. Verify that utility services are available, of the correct characteristics, and in the correct locations.

F. Prior to Cutting: Examine existing conditions prior to commencing work, including elements subject to damage or movement during cutting and patching. After uncovering existing work, assess conditions affecting performance of work. Beginning of cutting or patching means acceptance of existing conditions.

3.02 PREPARATION

A. Clean substrate surfaces prior to applying next material or substance.

B. Seal cracks or openings of substrate prior to applying next material or substance.

C. Apply manufacturer required or recommended substrate primer, sealer, or conditioner prior to applying any new material or substance in contact or bond.

3.03 PREINSTALLATION MEETINGS

A. When required in individual specification sections, convene a preinstallation meeting at the site prior to commencing work of the section.

B. Require attendance of parties directly affecting, or affected by, work of the specific section.

C. Notify Architect four days in advance of meeting date.

D. Prepare agenda and preside at meeting:
1. Review conditions of examination, preparation and installation procedures.
2. Review coordination with related work.

E. Record minutes and distribute copies within two days after meeting to participants, with two copies to Architect, Owner, participants, and those affected by decisions made.

3.04 LAYING OUT THE WORK

A. Verify locations of survey control points prior to starting work.

B. Promptly notify Architect of any discrepancies discovered.

C. Contractor shall locate and protect survey control and reference points.

D. Control datum for survey is that indicated on drawings.

E. Protect survey control points prior to starting site work; preserve permanent reference points during construction.

F. Promptly report to Architect the loss or destruction of any reference point or relocation required because of changes in grades or other reasons.

G. Replace dislocated survey control points based on original survey control. Make no changes without prior written notice to Architect.

H. Utilize recognized engineering survey practices.

I. Establish elevations, lines and levels. Locate and lay out by instrumentation and similar appropriate means:
1. Site improvements including pavements; stakes for grading, fill and topsoil placement; utility locations, slopes, and invert elevations; and _____.
2. Grid or axis for structures.
3. Building foundation, column locations, ground floor elevations, and _____.

J. Periodically verify layouts by same means.

K. Maintain a complete and accurate log of control and survey work as it progresses.

3.05 GENERAL INSTALLATION REQUIREMENTS

A. Install products as specified in individual sections, in accordance with manufacturer's instructions and recommendations, and so as to avoid waste due to necessity for replacement.

B. Make vertical elements plumb and horizontal elements level, unless otherwise indicated.

C. Install equipment and fittings plumb and level, neatly aligned with adjacent vertical and horizontal lines, unless otherwise indicated.

D. Make consistent texture on surfaces, with seamless transitions, unless otherwise indicated.

E. Make neat transitions between different surfaces, maintaining texture and appearance.

3.06 ALTERATIONS

A. Drawings showing existing construction and utilities are based on casual field observation and existing record documents only.
   1. Verify that construction and utility arrangements are as indicated.
   2. Report discrepancies to Architect before disturbing existing installation.
   3. Beginning of alterations work constitutes acceptance of existing conditions.

B. Remove existing work as indicated and as required to accomplish new work.
   1. Remove items indicated on drawings.

C. Services (Including but not limited to Plumbing, Fire Protection, Electrical, and Telecommunications): Remove, relocate, and extend existing systems to accommodate new construction.
   1. Maintain existing active systems that are to remain in operation; maintain access to equipment and operational components; if necessary, modify installation to allow access or provide access panel.
   2. Where existing systems or equipment are not active and Contract Documents require reactivation, put back into operational condition; repair supply, distribution, and equipment as required.
   3. Where existing active systems serve occupied facilities but are to be replaced with new services, maintain existing systems in service until new systems are complete and ready for service.
      a. Disable existing systems only to make switchovers and connections; minimize duration of outages.
      b. See Section 011000 for other limitations on outages and required notifications.
      c. Provide temporary connections as required to maintain existing systems in service.
   4. Verify that abandoned services serve only abandoned facilities.
   5. Remove abandoned pipe, ducts, conduits, and equipment ; remove back to source of supply where possible, otherwise cap stub and tag with identification; patch holes left by removal using materials specified for new construction.

D. Refinish existing surfaces as indicated:

E. Clean existing systems and equipment.

F. Remove demolition debris and abandoned items from alterations areas and dispose of off-site; do not burn or bury.

G. Do not begin new construction in alterations areas before demolition is complete.

H. Comply with all other applicable requirements of this section.

3.07 CUTTING AND PATCHING

A. Whenever possible, execute the work by methods that avoid cutting or patching.

B. See Alterations article above for additional requirements.

C. Perform whatever cutting and patching is necessary to:
   1. Complete the work.
   2. Fit products together to integrate with other work.
   3. Provide openings for penetration of mechanical, electrical, and other services.
   4. Match work that has been cut to adjacent work.
   5. Repair areas adjacent to cuts to required condition.
   6. Repair new work damaged by subsequent work.
   7. Remove samples of installed work for testing when requested.
   8. Remove and replace defective and non-complying work.

D. Execute work by methods that avoid damage to other work and that will provide appropriate surfaces to receive patching and finishing. In existing work, minimize damage and restore to original condition.

E. Employ original installer to perform cutting for weather exposed and moisture resistant elements, and sight exposed surfaces.

F. Cut rigid materials using masonry saw or core drill. Pneumatic tools not allowed without prior approval.

G. Restore work with new products in accordance with requirements of Contract Documents.

H. Fit work air tight to pipes, sleeves, ducts, conduit, and other penetrations through surfaces.

I. At penetrations of fire rated walls, partitions, ceiling, or floor construction, completely seal voids with fire rated material in accordance with Section 078400, to full thickness of the penetrated element.

J. Patching:
   1. Finish patched surfaces to match finish that existed prior to patching. On continuous surfaces, refinish to nearest intersection or natural break. For an assembly, refinish entire unit.
   2. Match color, texture, and appearance.
   3. Repair patched surfaces that are damaged, lifted, discolored, or showing other imperfections due to patching work. If defects are due to condition of substrate, repair substrate prior to repairing finish.

3.08 PROGRESS CLEANING

A. Maintain areas free of waste materials, debris, and rubbish. Maintain site in a clean and orderly condition.

B. Remove debris and rubbish from pipe chases, plenums, attics, crawl spaces, and other closed or remote spaces, prior to enclosing the space.

C. Broom and vacuum clean interior areas prior to start of surface finishing, and continue cleaning to eliminate dust.

D. Collect and remove waste materials, debris, and trash/rubbish from site periodically and dispose off-site; do not burn or bury.

3.09 PROTECTION OF INSTALLED WORK

A. Protect installed work from damage by construction operations.

B. Provide special protection where specified in individual specification sections.

C. Provide temporary and removable protection for installed products. Control activity in immediate work area to prevent damage.

D. Provide protective coverings at walls, projections, jambs, sills, and soffits of openings.

E. Protect finished floors, stairs, and other surfaces from traffic, dirt, wear, damage, or movement of heavy objects, by protecting with durable sheet materials.

F. Prohibit traffic or storage upon waterproofed or roofed surfaces. If traffic or activity is necessary, obtain recommendations for protection from waterproofing or roofing material manufacturer.

G. Remove protective coverings when no longer needed; reuse or recycle coverings if possible.

3.10 SYSTEM STARTUP

A. Coordinate with requirements of Section 019113 - General Commissioning Requirements.

B. Coordinate schedule for start-up of various equipment and systems.

C. Verify that each piece of equipment or system has been checked for proper lubrication, drive rotation, belt tension, control sequence, and for conditions that may cause damage.

D. Verify tests, meter readings, and specified electrical characteristics agree with those required by the equipment or system manufacturer.

E. Verify that wiring and support components for equipment are complete and tested.

F. Execute start-up under supervision of applicable Contractor personnel and manufacturer's representative in accordance with manufacturers' instructions.

G. Submit a written report that equipment or system has been properly installed and is functioning correctly.

3.11 DEMONSTRATION AND INSTRUCTION

A. See Section 017900 - Demonstration and Training.

3.12 ADJUSTING

A. Adjust operating products and equipment to ensure smooth and unhindered operation.

B. Testing, adjusting, and balancing HVAC systems: See Section 230593 - Testing, Adjusting, and Balancing for HVAC.

3.13 FINAL CLEANING

A. Use cleaning materials that are nonhazardous.

B. Clean interior and exterior glass, surfaces exposed to view; remove temporary labels, stains and foreign substances, polish transparent and glossy surfaces, vacuum carpeted and soft surfaces.

C. Remove all labels that are not permanent. Do not paint or otherwise cover fire test labels or nameplates on mechanical and electrical equipment.

D. Clean equipment and fixtures to a sanitary condition with cleaning materials appropriate to the surface and material being cleaned.

E. Clean filters of operating equipment.

F. Clean debris from roofs, gutters, downspouts, scuppers, overflow drains, area drains, drainage systems, and _____.

G. Clean site; sweep paved areas, rake clean landscaped surfaces.

H. Remove waste, surplus materials, trash/rubbish, and construction facilities from the site; dispose of in legal manner; do not burn or bury.

3.14 CLOSEOUT PROCEDURES

A. Make submittals that are required by governing or other authorities.
   1. Provide copies to Architect and Owner.

B. Accompany Project Coordinator on preliminary inspection to determine items to be listed for completion or correction in the Contractor's Correction Punch List for Contractor's Notice of Substantial Completion.

C. Notify Architect when work is considered ready for Architect's Substantial Completion inspection.

D. Submit written certification containing Contractor's Correction Punch List, that Contract Documents have been reviewed, work has been inspected, and that work is complete in accordance with Contract Documents and ready for Architect's Substantial Completion inspection.

E. Conduct Substantial Completion inspection and create Final Correction Punch List containing Architect's and Contractor's comprehensive list of items identified to be completed or corrected and submit to Architect.

F. Correct items of work listed in Final Correction Punch List and comply with requirements for access to Owner-occupied areas.

G. Notify Architect when work is considered finally complete and ready for Architect's Substantial Completion final inspection.

H. Complete items of work determined by Architect listed in executed Certificate of Substantial Completion.

3.15 MAINTENANCE

A. Provide service and maintenance of components indicated in specification sections.

B. Maintenance Period: As indicated in specification sections or, if not indicated, not less than one year from the Date of Substantial Completion or the length of the specified warranty, whichever is longer.

C. Examine system components at a frequency consistent with reliable operation. Clean, adjust, and lubricate as required.

D. Include systematic examination, adjustment, and lubrication of components. Repair or replace parts whenever required. Use parts produced by the manufacturer of the original component.

E. Maintenance service shall not be assigned or transferred to any agent or subcontractor without prior written consent of the Owner.

END OF SECTION 017000

This page intentionally left blank

SECTION 017419
CONSTRUCTION WASTE MANAGEMENT AND DISPOSAL

PART 1 GENERAL

1.01 WASTE MANAGEMENT REQUIREMENTS

A. Owner requires that this project generate the least amount of trash and waste possible.

B. Employ processes that ensure the generation of as little waste as possible due to error, poor planning, breakage, mishandling, contamination, or other factors.

C. Minimize trash/waste disposal in landfills; reuse, salvage, or recycle as much waste as economically feasible.

D. Required Recycling, Salvage, and Reuse: The following may not be disposed of in landfills or by incineration:
   1. Aluminum and plastic beverage containers.
   2. Corrugated cardboard.
   3. Wood pallets.
   4. Clean dimensional wood.
   5. Land clearing debris, including brush, branches, logs, and stumps; see Section 311000 - Site Clearing for use options.
   6. Metals, including packaging banding, metal studs, sheet metal, structural steel, piping, reinforcing bars, door frames, and other items made of steel, iron, galvanized steel, stainless steel, aluminum, copper, zinc, lead, brass, and bronze.

E. Develop and follow a Waste Management Plan designed to implement these requirements.

F. Methods of trash/waste disposal that are not acceptable are:
   1. Burning on the project site.
   2. Burying on the project site.
   3. Dumping or burying on other property, public or private.
   4. Other illegal dumping or burying.

G. Regulatory Requirements: Contractor is responsible for knowing and complying with regulatory requirements, including but not limited to Federal, state and local requirements, pertaining to legal disposal of all construction and demolition waste materials.

1.02 RELATED REQUIREMENTS

A. Section 011000 - Summary: List of items to be salvaged from the existing building for relocation in project or for Owner.

B. Section 012500 - Substitution Procedures.

C. Section 013000 - Administrative Requirements: Additional requirements for project meetings, reports, submittal procedures, and project documentation.

D. Section 015000 - Temporary Facilities and Controls: Additional requirements related to trash/waste collection and removal facilities and services.

E. Section 016000 - Product Requirements: Waste prevention requirements related to product substitutions.

F. Section 016000 - Product Requirements: Waste prevention requirements related to delivery, storage, and handling.

G. Section 017000 - Execution and Closeout Requirements: Trash/waste prevention procedures related to demolition, cutting and patching, installation, protection, and cleaning.

H. APWA 311000 - Site Clearing: Handling and disposal of land clearing debris.

I. State of Utah DFCM High Performance Building Standards

1.03 DEFINITIONS

A. Clean: Untreated and unpainted; not contaminated with oils, solvents, caulk, or the like.

B. Construction and Demolition Waste: Solid wastes typically including building materials, packaging, trash, debris, and rubble resulting from construction, remodeling, repair and demolition operations.

C. Hazardous: Exhibiting the characteristics of hazardous substances, i.e., ignitibility, corrosivity, toxicity or reactivity.

D. Nonhazardous: Exhibiting none of the characteristics of hazardous substances, i.e., ignitibility, corrosivity, toxicity, or reactivity.

E. Nontoxic: Neither immediately poisonous to humans nor poisonous after a long period of exposure.

F. Recyclable: The ability of a product or material to be recovered at the end of its life cycle and remanufactured into a new product for reuse by others.

G. Recycle: To remove a waste material from the project site to another site for remanufacture into a new product for reuse by others.

H. Recycling: The process of sorting, cleansing, treating and reconstituting solid waste and other discarded materials for the purpose of using the altered form. Recycling does not include burning, incinerating, or thermally destroying waste.

I. Return: To give back reusable items or unused products to vendors for credit.

J. Reuse: To reuse a construction waste material in some manner on the project site.

K. Salvage: To remove a waste material from the project site to another site for resale or reuse by others.

L. Sediment: Soil and other debris that has been eroded and transported by storm or well production run-off water.

M. Source Separation: The act of keeping different types of waste materials separate beginning from the first time they become waste.

N. Toxic: Poisonous to humans either immediately or after a long period of exposure.

O. Trash: Any product or material unable to be reused, returned, recycled, or salvaged.

P. Waste: Extra material or material that has reached the end of its useful life in its intended use. Waste includes salvageable, returnable, recyclable, and reusable material.

1.04 SUBMITTALS

A. See Section 013000 - Administrative Requirements for submittal procedures.

B. Waste Management Plan: Include the following information:
   1. Analysis of the trash and waste projected to be generated during the entire project construction cycle, including types and quantities.
   2. Landfill Options: The name, address, and telephone number of the landfill(s) where trash/waste will be disposed of, the applicable landfill tipping fee(s), and the projected cost of disposing of all project trash/waste in the landfill(s).
   3. Landfill Alternatives: List all waste materials that will be diverted from landfills by reuse, salvage, or recycling.
   4. Meetings: Describe regular meetings to be held to address waste prevention, reduction, recycling, salvage, reuse, and disposal.
   5. Materials Handling Procedures: Describe the means by which materials to be diverted from landfills will be protected from contamination and prepared for acceptance by designated facilities; include separation procedures for recyclables, storage, and packaging.
   6. Transportation: Identify the destination and means of transportation of materials to be recycled; i.e. whether materials will be site-separated and self-hauled to designated centers, or whether mixed materials will be collected by a waste hauler.

PART 2 PRODUCTS

2.01 PRODUCT SUBSTITUTIONS

A. See Section 016000 and Section 012500.

B. For each proposed product substitution, submit the following information in addition to requirements specified in Section 016000:
   1. Relative amount of waste produced, compared to specified product.
   2. Cost savings on waste disposal, compared to specified product, to be deducted from the Contract Price.
   3. Proposed disposal method for waste product.
   4. Markets for recycled waste product.

PART 3 EXECUTION

3.01 WASTE MANAGEMENT PROCEDURES

A. See Section 013000 for additional requirements for project meetings, reports, submittal procedures, and project documentation.

B. See Section 015000 for additional requirements related to trash/waste collection and removal facilities and services.

C. See Section 016000 for waste prevention requirements related to delivery, storage, and handling.

D. See Section 017000 for trash/waste prevention procedures related to demolition, cutting and patching, installation, protection, and cleaning.

3.02 WASTE MANAGEMENT PLAN IMPLEMENTATION

A. Manager: Designate an on-site person or persons responsible for instructing workers and overseeing and documenting results of the Waste Management Plan.

B. Communication: Distribute copies of the Waste Management Plan to job site foreman, each subcontractor, Owner, and Architect.

C. Instruction: Provide on-site instruction of appropriate separation, handling, and recycling, salvage, reuse, and return methods to be used by all parties at the appropriate stages of the project.

D. Meetings: Discuss trash/waste management goals and issues at project meetings.
   1. Prebid meeting.
   2. Preconstruction meeting.
   3. Regular job-site meetings.

E. Facilities: Provide specific facilities for separation and storage of materials for recycling, salvage, reuse, return, and trash disposal, for use by all contractors and installers.
   1. As a minimum, provide:
      a. Separate dumpsters for each category of recyclable.
      b. Recycling bins at worker lunch area.
   2. Provide containers as required.
   3. Provide adequate space for pick-up and delivery and convenience to subcontractors.
   4. Keep recycling and trash/waste bin areas neat and clean and clearly marked in order to avoid contamination of materials.

F. Hazardous Wastes: Separate, store, and dispose of hazardous wastes according to applicable regulations.

G. Recycling: Separate, store, protect, and handle at the site identified recyclable waste products in order to prevent contamination of materials and to maximize recyclability of identified materials. Arrange for timely pickups from the site or deliveries to recycling facility in order to prevent contamination of recyclable materials.

H. Reuse of Materials On-Site: Set aside, sort, and protect separated products in preparation for reuse.

I. Salvage: Set aside, sort, and protect products to be salvaged for reuse off-site.

END OF SECTION 017419

SECTION 017800
CLOSEOUT SUBMITTALS

PART 1 GENERAL

1.01 SECTION INCLUDES

A. Project record documents.

B. Operation and maintenance data.

C. Warranties and bonds.

1.02 RELATED REQUIREMENTS

A. Section 007200 - General Conditions and 007300 - Supplementary Conditions: Performance bond and labor and material payment bonds, warranty, and correction of work.

B. Section 013000 - Administrative Requirements: Submittals procedures, shop drawings, product data, and samples.

C. Section 017000 - Execution and Closeout Requirements: Contract closeout procedures.

D. Individual Product Sections: Specific requirements for operation and maintenance data.

E. Individual Product Sections: Warranties required for specific products or Work.

1.03 SUBMITTALS

A. Project Record Documents: Submit documents to Architect with claim for final Application for Payment.

B. Operation and Maintenance Data:
   1. For equipment, or component parts of equipment put into service during construction and operated by Owner, submit completed documents within ten days after acceptance.
   2. Submit one copy of completed documents 15 days prior to final inspection. This copy will be reviewed and returned after final inspection, with Architect comments. Revise content of all document sets as required prior to final submission.
   3. Submit two sets of revised final documents in final form within 10 days after final inspection.

C. Warranties and Bonds:
   1. For equipment or component parts of equipment put into service during construction with Owner's permission, submit documents within 10 days after acceptance.
   2. Make other submittals within 10 days after Date of Substantial Completion, prior to final Application for Payment.
   3. For items of Work for which acceptance is delayed beyond Date of Substantial Completion, submit within 10 days after acceptance, listing the date of acceptance as the beginning of the warranty period.

PART 2 PRODUCTS - NOT USED

PART 3 EXECUTION

3.01 PROJECT RECORD DOCUMENTS

A. Maintain on site one set of the following record documents; record actual revisions to the Work:
   1. Drawings.
   2. Specifications.
   3. Addenda.
   4. Change Orders and other modifications to the Contract.
   5. Reviewed shop drawings, product data, and samples.

B. Ensure entries are complete and accurate, enabling future reference by Owner.

C. Store record documents separate from documents used for construction.

D. Record information concurrent with construction progress.

E. Specifications: Legibly mark and record at each product section description of actual products installed, including the following:
   1. Changes made by Addenda and modifications.

F. Record Drawings and Shop Drawings: Legibly mark each item to record actual construction including:
   1. Field changes of dimension and detail.
   2. Details not on original Contract drawings.

3.02 OPERATION AND MAINTENANCE DATA

A. Product Data: Mark each sheet to clearly identify specific products and component parts, and data applicable to installation. Delete inapplicable information.

B. Drawings: Supplement product data to illustrate relations of component parts of equipment and systems, to show control and flow diagrams. Do not use Project Record Documents as maintenance drawings.

C. Typed Text: As required to supplement product data. Provide logical sequence of instructions for each procedure, incorporating manufacturer's instructions.

3.03 OPERATION AND MAINTENANCE DATA FOR MATERIALS AND FINISHES

A. For Each Product, Applied Material, and Finish:
   1. Product data, with catalog number, size, composition, and color and texture designations.

B. Instructions for Care and Maintenance: Manufacturer's recommendations for cleaning agents and methods, precautions against detrimental cleaning agents and methods, and recommended schedule for cleaning and maintenance.

C. Where additional instructions are required, beyond the manufacturer's standard printed instructions, have instructions prepared by personnel experienced in the operation and maintenance of the specific products.

3.04 OPERATION AND MAINTENANCE DATA FOR EQUIPMENT AND SYSTEMS

A. For Each Item of Equipment and Each System:
   1. Description of unit or system, and component parts.
   2. Identify function, normal operating characteristics, and limiting conditions.
   3. Include performance curves, with engineering data and tests.
   4. Complete nomenclature and model number of replaceable parts.

B. Where additional instructions are required, beyond the manufacturer's standard printed instructions, have instructions prepared by personnel experienced in the operation and maintenance of the specific products.

C. Operating Procedures: Include start-up, break-in, and routine normal operating instructions and sequences. Include regulation, control, stopping, shut-down, and emergency instructions. Include summer, winter, and any special operating instructions.

D. Include manufacturer's printed operation and maintenance instructions.

E. Provide original manufacturer's parts list, illustrations, assembly drawings, and diagrams required for maintenance.

3.05 WARRANTIES AND BONDS

A. Obtain warranties and bonds, executed in duplicate by responsible Subcontractors, suppliers, and manufacturers, within 10 days after completion of the applicable item of work. Except for items put into use with Owner's permission, leave date of beginning of time of warranty until Date of Substantial completion is determined.

B. Verify that documents are in proper form, contain full information, and are notarized.

C. Co-execute submittals when required.

D. Retain warranties and bonds until time specified for submittal.

END OF SECTION 017800

This page intentionally left blank

SECTION 017900
DEMONSTRATION AND TRAINING

PART 1 GENERAL

1.01 SUMMARY

A. Demonstration of products and systems to be commissioned and where indicated in specific specification sections.

B. Training of Owner personnel in operation and maintenance is required for:
   1. HVAC systems and equipment.
   2. Plumbing equipment.
   3. Electrical systems and equipment.
   4. Items specified in individual product Sections.

C. Training of Owner personnel in care, cleaning, maintenance, and repair is required for:
   1. Finishes, including flooring, wall finishes, ceiling finishes.
   2. Items specified in individual product Sections.

1.02 RELATED REQUIREMENTS

A. Section 017800 - Closeout Submittals: Operation and maintenance manuals.

B. Section 019113 - General Commissioning Requirements: Additional requirements applicable to demonstration and training.

C. Other Specification Sections: Additional requirements for demonstration and training.

1.03 SUBMITTALS

A. See Section 013000 - Administrative Requirements, for submittal procedures; except:
   1. Make all submittals specified in this section, and elsewhere where indicated for commissioning purposes, directly to the Commissioning Authority.
   2. Submit one copy to the Commissioning Authority, not to be returned.
   3. Make commissioning submittals on time schedule specified by Commissioning Authority.
   4. Submittals indicated as "Draft" are intended for the use of the Commissioning Authority in preparation of overall Training Plan; submit in editable electronic format, Microsoft Word 2003 preferred.

B. Draft Training Plans: Owner will designate personnel to be trained; tailor training to needs and skill-level of attendees.
   1. Submit to Commissioning Authority for review and inclusion in overall training plan.
   2. Submit not less than four weeks prior to start of training.
   3. Revise and resubmit until acceptable.
   4. Provide an overall schedule showing all training sessions.
   5. Include at least the following for each training session:
      a. Identification, date, time, and duration.
      b. Description of products and/or systems to be covered.
      c. Name of firm and person conducting training; include qualifications.
      d. Intended audience, such as job description.
      e. Objectives of training and suggested methods of ensuring adequate training.
      f. Methods to be used, such as classroom lecture, live demonstrations, hands-on, etc.
      g. Media to be used, such a slides, hand-outs, etc.
      h. Training equipment required, such as projector, projection screen, etc., to be provided by Contractor.

C. Training Manuals: Provide training manual for each attendee; allow for minimum of two attendees per training session.
   1. Include applicable portion of O&M manuals.
   2. Include copies of all hand-outs, slides, overheads, video presentations, etc., that are not included in O&M manuals.

3. Provide one extra copy of each training manual to be included with operation and maintenance data.

D. Training Reports:
1. Identification of each training session, date, time, and duration.
2. Sign-in sheet showing names and job titles of attendees.
3. List of attendee questions and written answers given, including copies of and references to supporting documentation required for clarification; include answers to questions that could not be answered in original training session.
4. Include Commissioning Authority's formal acceptance of training session.

1.04 QUALITY ASSURANCE

A. Instructor Qualifications: Familiar with design, operation, maintenance and troubleshooting of the relevant products and systems.
1. Provide as instructors the most qualified trainer of those contractors and/or installers who actually supplied and installed the systems and equipment.
2. Where a single person is not familiar with all aspects, provide specialists with necessary qualifications.

PART 2 PRODUCTS - NOT USED

PART 3 EXECUTION

3.01 DEMONSTRATION - GENERAL

A. Demonstrations conducted during system start-up do not qualify as demonstrations for the purposes of this section, unless approved in advance by Owner.

B. Demonstrations conducted during Functional Testing need not be repeated unless Owner personnel training is specified.

C. Demonstration may be combined with Owner personnel training if applicable.

D. Operating Equipment and Systems: Demonstrate operation in all modes, including start-up, shut-down, seasonal changeover, emergency conditions, and troubleshooting, and maintenance procedures, including scheduled and preventive maintenance.
1. Perform demonstrations not less than two weeks prior to Substantial Completion.
2. For equipment or systems requiring seasonal operation, perform demonstration for other season within six months.

E. Non-Operating Products: Demonstrate cleaning, scheduled and preventive maintenance, and repair procedures.
1. Perform demonstrations not less than two weeks prior to Substantial Completion.

3.02 TRAINING - GENERAL

A. Commissioning Authority will prepare the Training Plan based on draft plans submitted.

B. Conduct training on-site unless otherwise indicated.

C. Owner will provide classroom and seating at no cost to Contractor.

D. Do not start training until Functional Testing is complete, unless otherwise specified or approved by the Commissioning Authority.

E. Provide training in minimum two hour segments.

F. The Commissioning Authority is responsible for determining that the training was satisfactorily completed and will provide approval forms.

G. Training schedule will be subject to availability of Owner's personnel to be trained; re-schedule training sessions as required by Owner; once schedule has been approved by Owner failure to conduct sessions according to schedule will be cause for Owner to charge Contractor for personnel "show-up" time.

H. Review of Facility Policy on Operation and Maintenance Data: During training discuss:

1. The location of the O&M manuals and procedures for use and preservation; backup copies.
2. Typical contents and organization of all manuals, including explanatory information, system narratives, and product specific information.
3. Typical uses of the O&M manuals.

I. Product- and System-Specific Training:
1. Review the applicable O&M manuals.
2. For systems, provide an overview of system operation, design parameters and constraints, and operational strategies.
3. Review instructions for proper operation in all modes, including start-up, shut-down, seasonal changeover and emergency procedures, and for maintenance, including preventative maintenance.
4. Provide hands-on training on all operational modes possible and preventive maintenance.
5. Emphasize safe and proper operating requirements; discuss relevant health and safety issues and emergency procedures.
6. Discuss common troubleshooting problems and solutions.
7. Discuss any peculiarities of equipment installation or operation.
8. Discuss warranties and guarantees, including procedures necessary to avoid voiding coverage.
9. Review recommended tools and spare parts inventory suggestions of manufacturers.
10. Review spare parts and tools required to be furnished by Contractor.
11. Review spare parts suppliers and sources and procurement procedures.

J. Be prepared to answer questions raised by training attendees; if unable to answer during training session, provide written response within three days.

END OF SECTION 017900

This page intentionally left blank

SECTION 019113
GENERAL COMMISSIONING

PART 1 - GENERAL

1.01 RELATED DOCUMENTS

A. Drawings and general provisions of the Contract, including General and Supplementary Conditions and other Division 01 Specification Sections, apply to this Section.

B. OPR and BOD documentation

1.02 SUMMARY

A. Prepared by Owner and Architect contains requirements that apply to this Section.

B. This Section includes:
   1. General requirements that apply to implementation of commissioning without regard to systems, subsystems, and equipment being commissioned.
   2. Commissioning Team
   3. Commissioning Meetings
   4. Construction Checklist Overview
   5. Controls Verification
   6. Functional Performance Testing
   7. Training Development
   8. Commissioning Plan

C. Related Sections
   1. Division 1 Section “Sustainable Design Requirements” for specific requirements
      a. relating to the Utah State High Performance Building Standard.
   2. Division 1 Section "Fire Sprinkler Systems Commissioning requirements" for specific requirements for commissioning Fire Sprinkler systems.
   3. Division 1 Section "Plumbing Systems Commissioning requirements" for specific requirements for commissioning Plumbing systems.
   4. Division 1 Section "HVAC Systems Commissioning requirements" for specific requirements for commissioning HVAC systems.
   5. Division 1 Section "Electrical Systems Commissioning Requirements" for specific requirements for commissioning Electrical Systems.

1.03 DEFINITIONS

A. BOD: Basis of Design.

B. CxA: Commissioning Authority.

C. OPR: Owner's Project Requirements.

D. Systems, Subsystems, and Equipment: Where these terms are used together or separately, they shall mean "as-built" systems, subsystems, and equipment.

E. TAB: Testing, Adjusting, and Balancing.

F. DFCM: Division for Construction and Management (State of Utah)

1.04 DESCRIPTION

A. The owner has chosen to use the Commissioning Process as part of their quality process to plan, design, construct and operate this building.
   1. As with any quality process, Commissioning provides tools to enable everyone involved in the construction of a building to ensure that the final building meets the original intent of the Owner.
   2. A primary tool used is the completion of construction checklists by individual workers. The checklists are simple to fill out and easily track the current state of work by providing the key criteria in the specifications the Owner has defined as important for the successful installation and long-term operation of systems and equipment.

B. A key component of Commissioning is the verification of the operation of systems, including electrical, plumbing, and heating and cooling systems in all modes of operation to ensure the building is ready for year-round occupancy.

C. Commissioning provides focused training of operation and maintenance personnel by ensuring that detailed training agendas are utilized and requiring detailed submittal requirements from Contractors prior to accomplishing any training.

D. The owner is financially responsible for contracting the services of the CxA to perform the CxA duties as specified in this section.

E. The contractor is responsible for delivering a quality, functionally complete system as specified in the project documents. If the contractor has certified that systems are complete and functional, and then the systems fail inspection or verification, the contractor will be financially responsible for the additional services of the CxA to retest equipment.

F. Systems to be commissioned:
   1. Electrical:
      a. Normal Power Systems
      b. Emergency Power
      c. Lighting Control Systems
      d. Daylight Dimming Control Systems
   2. Mechanical Systems:
      a. Building HVAC System and Controls
      b. Plumbing Systems
   3. Fire Suppression:
      a. Installation
      b. Required Testing

1.05 COMMISSIONING TEAM

A. Members Appointed by Contractor(s):
   1. Individuals, each having authority to act on behalf of the entity he or she represents, explicitly organized to implement the commissioning process through coordinated actions.
   2. The commissioning team shall consist of, but not be limited to, representatives of Contractor, including Project superintendent and subcontractors, installers, suppliers, and specialists believed appropriate by the CxA.

B. Members Appointed by Owner:
   1. CxA: UNVC is the designated company that plans, schedules, and coordinates the commissioning team to implement the commissioning process. Owner has engaged the CxA under a separate contract.
   2. Representatives of the Owner’s facility user and operation and maintenance
      a. personnel.
   3. Architect and engineering design professionals.

1.06 OWNER'S RESPONSIBILITIES

A. Supply the OPR documentation to the CxA and Contractor for use in developing the commissioning plan; systems manual; operation and maintenance training plan; and testing plans and checklists.

B. Assign operation and maintenance personnel and schedule them to take part in commissioning team activities including, but not limited to the following:
   1. Training in operation and maintenance of systems, subsystems, and equipment.
   2. On-Site Inspections
   3. Demonstration of operation of systems, subsystems, and equipment.

C. Supply the BOD documents, prepared by Architect and approved by Owner, to the CxA and Contractor for use in developing the commissioning plan, and operation and maintenance training plan.

1.07 CONTRACTOR'S RESPONSIBILITIES

A. Coordinate this Article with requirements specified in Division 01 Section "Multiple Contract Summary" for Project Coordinator's responsibilities.

B. Supply utility services required for the commissioning process.

C. Contractor shall assign representatives with ability and authority to act on behalf of the Contractor and schedule them to participate in and perform commissioning team activities including, but not limited to, the following:
   1. Participate in design- and construction-phase coordination meetings.
   2. Integrate all commissioning activities into the master schedule.
   3. Participate in maintenance orientation and inspection.
   4. Participate in operation and maintenance training sessions.
   5. Certify that Work is complete, and systems are operational per the Contract Documents, including calibration of instrumentation and controls.
   6. Evaluate performance deficiencies found in test reports and, in collaboration with entity responsible for system and equipment installation, recommend corrective action.
   7. Review and approve final commissioning documentation.
   8. Participate in the Six and Ten-Month Reviews as required by DFCM.

D. Subcontractors shall assign representatives with ability and authority to act on behalf of subcontractors and schedule them to participate in and perform commissioning team activities including, but not limited to, the following:
   1. Participate in design- and construction-phase coordination meetings.
   2. Participate in maintenance orientation and inspection.
   3. Provide scheduling input to the Contractor.
   4. Provide schedule for operation and maintenance data submittals, equipment startup, and testing to CxA for incorporation into the commissioning plan. Update schedule on a weekly basis throughout the construction period.
   5. Provide information to the CxA for developing construction-phase commissioning plan.
   6. Participate in training sessions for Owner's operation and maintenance personnel.
   7. Gather and submit operation and maintenance data for systems, subsystems, and equipment to the CxA, as specified in Division 01 Section "Operation and Maintenance Data."
   8. Provide technicians who are familiar with the construction and operation of installed systems and who shall develop specific test procedures and take part in testing of installed systems, subsystems, and equipment.
   9. Participate in the Six and Ten-Month Reviews as required by DFCM.

1.08 CXA RESPONSIBILITIES

A. Organize and lead the commissioning team.

B. Prepare a construction-phase commissioning plan. Collaborate with Contractor and with subcontractors to develop test and inspection procedures. Include design changes and scheduled commissioning activities coordinated with overall Project schedule. Identify commissioning team member responsibilities, by name, firm, and trade specialty, for performance of each commissioning task.

C. Review and comment on submittals from Contractor for compliance with the OPR, BOD, Contract Documents, and construction-phase commissioning plan. Review and comment on performance expectations of systems and equipment and interfaces between systems relating to the OPR and BOD.

D. At the beginning of the construction phase, conduct a first construction-phase coordination meeting. The purpose of this meeting is to review the commissioning activities and setting up tentative schedules for operation and maintenance submittals; operation and maintenance training sessions; TAB Work; and Project completion.

E. Observe and inspect construction and report progress and deficiencies. In addition to compliance with the OPR, BOD, and Contract Documents, inspect systems and equipment installation for adequate accessibility for maintenance and part replacement or repair.

F. Prepare Project-specific test and inspection procedures and checklists.

G. Develop an enhanced start-up and initial systems checkout plan with Subs.

H. Schedule, direct, witness, and document tests, inspections, and systems startup.

I. Compile test data, inspection reports, and certificates and include them in the commissioning report.

J. Review Project Record Documents for accuracy. Request revisions from Contractor to achieve accuracy. Project Record Documents requirements are specified in Division 01 Section "Project Record Documents."

K. Review and comment on operation and maintenance documentation for compliance with the OPR, BOD, and Contract Documents. Operation and maintenance documentation requirements are specified in Division 01 Section "Operation and Maintenance Data."

L. Prepare operation and maintenance training program and supply qualified instructors to conduct operation and maintenance training. Operation and maintenance training are specified in Division 01 Section "Demonstration and Training."

M. Prepare commissioning report.

1.09 COMMISSIONING DOCUMENTATION

A. OPR: A written document, prepared by Owner, which details the functional requirements of Project and expectations of how it will be used and operated. This document includes Project and design goals, measurable performance criteria, budgets, schedules, success criteria, and supporting information.

B. BOD Document: A document, prepared by Architect, that records concepts, calculations, decisions, and product selections used to meet the OPR and to satisfy applicable regulatory requirements, standards, and guidelines. The document includes both narrative descriptions and lists of individual items that support the design process.

C. Commissioning Plan: A document, prepared by CxA, that outlines the schedule, allocation of resources, and documentation requirements of the commissioning process, and shall include, but is not limited to the following:
   1. Description of the organization, layout, and content of commissioning documentation (including systems manual) and a detailed description of documents to be provided along with identification of responsible parties.
   2. Description of schedules for testing procedures along with identification of parties involved in performing and verifying tests.
   3. Description of responsibilities of commissioning team members.
   4. Process and schedule for completing prestart and startup checklists for systems, subsystems, and equipment to be verified and tested.
   5. Communications channels that will be used during the commissioning process.
   6. Identification of systems and equipment to be commissioned.

D. Test Checklists:
   1. CxA, with aid of Architect/Engineers, shall:
      a. Develop test checklists for each system, subsystem, or equipment including interfaces and interlocks, and include a separate entry, with space for comments, for each item to be tested.
      b. Prepare separate checklists for each mode of operation and supply space to show whether the mode under test responded as required. Provide space for testing personnel to sign off on each checklist. Each checklist, regardless of system, subsystem, or equipment being tested, shall include, but not be limited to, the following:

1) Name and nomenclature of tested item.
2) Indication of whether the record is for a first test or retest following correction of a problem or issue.
3) Dated signatures of the person performing test and of the witness, if applicable.
4) Individuals present for test.
5) Deficiencies.

2. Contractor, Subcontractor(s), and Installer(s) shall,
   a. Provide on-site startup reports by factory representative where required in the specification.
   b. Provide Certificate of Readiness: Certificate of Readiness shall be signed certifying that systems, subsystems, equipment, and associated controls are ready for testing. Completed test checklists signed by the responsible parties shall accompany this certificate.

E. Test and Inspection Reports:
   1. CxA shall record test data, observations, and measurements on test checklists. Photographs, forms, and other means appropriate for the application shall be included with data.
   2. CxA shall compile test and inspection reports and test and inspection certificates and include them in systems manual and commissioning report.

F. Corrective Action Documents:
   1. CxA shall document corrective action taken for systems and equipment that fail tests. Include required modifications to systems and equipment and revisions to test procedures, if any.
   2. Retest systems and equipment requiring corrective action and document retest results.

G. Commissioning Report:
   1. CxA shall document results of the commissioning process including unresolved issues and performance of systems, subsystems, and equipment.
   2. The commissioning report shall indicate whether systems, subsystems, and equipment have been completed and are performing per the OPR, BOD, and Contract Documents.
   3. The commissioning report shall include, but is not limited to, the following:
      a. Lists and explanations of substitutions; compromises; variances in the OPR, BOD, and Contract Documents; record of conditions; and, if appropriate, recommendations for resolution.
      b. This report shall be used to evaluate systems, subsystems, and equipment and shall serve as a future reference document during Owner occupancy and operation.
      c. It may also include a recommendation for accepting or rejecting systems, subsystems, and equipment.
      d. OPR and BOD documentation.
      e. Commissioning plan.
      f. Project Correspondence
      g. Completed test checklists. h.

1.10 SUBMITTALS

A. Commissioning Plan Preliminary Submittal:
   1. CxA shall submit three hard copies of preliminary commissioning plan. Deliver one copy to Contractor, one to Owner, and one to Architect.
   2. Present submittal in enough detail to evaluate data collection and arrangement process. One copy, with review comments, will be returned to the CxA for preparation of the final construction-phase commissioning plan.

B. Commissioning Plan Final Submittal:
   1. CxA shall submit two hard copies and two sets of electronically formatted information of final commissioning plan.

2. Deliver one hard copy and one set of discs to Architect. The final submittal must address previous review comments. The final submittal shall include a copy of the preliminary submittal review comments along with a response to each item.

C. Test Checklists and Report Forms:
1. CxA shall submit sample checklists and forms to Contractor quality-control manager and subcontractors for review and comment.
2. Submit two copies of each checklist and report form.

D. Test and Inspection Reports: CxA shall submit test and inspection reports.

E. Commissioning Report Submittal:
1. CxA shall submit two hard copies and two sets of electronically formatted information of the final commissioning report.
2. CxA shall deliver one hard copy and one set of discs to Architect.

1.11 COORDINATION

A. Testing Coordination: CxA shall coordinate sequence of testing activities to accommodate required quality-assurance and -control services with a minimum of delay and to avoid necessity of removing and replacing construction to accommodate testing and inspecting and schedule times for tests, inspections, obtaining samples, and similar activities.

B. Manufacturers' Field Services: Contractor shall coordinate services of manufacturers' field services personnel.

PART 2 - PRODUCTS

2.01 TEST EQUIPMENT

A. Standard Testing Equipment: All standard testing equipment required to perform startup and initial checkout and needed functional performance testing shall be provided by the Division contractor for the equipment being tested. For example, the mechanical contractor of Division 23 shall ultimately be responsible for all standard testing equipment for the HVAC system and controls system in Division 23, except for equipment specific to and used by TAB in their commissioning responsibilities. Two-way radios shall be provided by the Division Contractor as needed and as directed by the CxA.

B. Special Equipment: Special equipment, tools and instruments (only available from vendor, specific to a piece of equipment) required for testing equipment, per these Contract Documents shall be included in the base bid price to the Contractor and left on site, except for stand-alone datalogging equipment that may be used by the CA.

C. Data Logging Equipment: Data Logging equipment, software and services needed to test equipment will be provided by the contractor but shall not become the property of the Owner.

D. Equipment Quality: All testing equipment shall be of enough quality and accuracy to test and/or measure system performance with the tolerances specified in the Specifications. If not otherwise noted, the following minimum requirements apply: Temperature sensors and digital thermometers shall have a certified calibration within the past year to an accuracy of 0.5□F and a resolution of + or - 0.1□F. Pressure sensors shall have an accuracy of + or - 2.0% of the value range being measured (not full range of meter) and have been calibrated within the last year. All equipment shall be calibrated per the manufacturer’s recommended intervals and when dropped or damaged. Calibration tags shall be affixed or certificates readily available.

PART 3 - EXECUTION

3.01 OPERATION AND MAINTENANCE TRAINING REQUIREMENTS

A. Training Preparation Conference:
1. Before operation and maintenance training, CxA shall convene a training preparation conference to include Owner's operation and maintenance personnel, Contractor, and subcontractors.

B. Training Modules:

1. An instruction program that includes individual training modules for each system, subsystem, and equipment as specified in Division 01 Section "Demonstration and Training" will be developed.
2. Each module shall be developed per the format established for this project, by the individuals responsible for that system or component.

3.02 DEFERRED TESTING

A. Unforeseen Deferred Tests. If any check or test cannot be completed due to the building structure, required occupancy or other deficiency, execution of checklists and functional testing may be delayed upon approval of the Contractor. These tests will be conducted in the same manner as the seasonal tests as soon as possible. Services of necessary parties will be negotiated.

B. Seasonal Testing. During the warranty period, seasonal testing (tests delayed until weather conditions are closer to the system’s design) shall be completed as part of this contract. The CxA shall coordinate this activity. Tests will be executed, documented and deficiencies corrected by the appropriate Subs, with facilities staff and the CxA witnessing. Any final adjustments to the O&M manuals and as-builds due to the testing will be made by the contractor.

END OF SECTION 019113

This page intentionally left blank

SECTION 019115
BUILDING ENCLOSURE COMMISSIONING REQUIREMENTS

PART 1 GENERAL

1.01 RELATED DOCUMENTS

A. Drawings and general provisions of the Contract, including General and Supplementary Conditions and other Division 01 Specification Sections, apply to this Section.

B. State of Utah, DFCM HPBS Functional Mockup Design, Preparation, and Testing Guide

1.02 SUMMARY

A. The work under this Section is subject to requirements of the Contract Documents, including the Owner's General Conditions and articles of the Construction Manager's General Conditions.

B. This Section summarizes the Building Enclosure Commissioning requirements and includes general requirements that apply to implementation of building enclosure commissioning without regard to specific products, systems, assemblies, or components. Refer to Section 019117 for Building Enclosure Functional Performance Testing Requirements.
   1. The Building Enclosure Commissioning requirements in this Section are entirely separate from, and in addition to, the General Commissioning Requirements.

C. Building Enclosure Commissioning (BECx) is a quality control process designed to provide the Owner and General Contractor an assurance the enclosure systems responsible for environmental separation have been installed correctly in accordance with the Contract Documents, manufacturers installation instructions, and good industry practice. The BECx process is intended to achieve the following specific objectives:
   1. Provide the Owner with an unbiased and objective view of the building enclosure installation, operation, and performance.
   2. Verify building enclosure systems responsible for environmental separation, with respect to air, moisture, and thermal performance, perform interactively within the performance guidelines set forth in the design intent.
   3. Verify and document the correct installation and acceptable performance of building enclosure products and systems.
   4. Provide assurance to the Owner the building enclosure will have minimal performance issues within the warranty period for the products and systems commissioned.

D. Building Enclosure Commissioning does not take away from, or reduce responsibility of, system designers or installing contractors to provide a finished and fully functioning product. This Section shall in no way diminish the responsibility of installers in performing all aspects of work and testing as outlined in the Contract Documents. Where conflicts occur regarding enclosure functional performance testing criteria Section 019117 shall supersede. Where conflicts occur regarding required enclosure functional performance testing the Architect, in consultation with the BECxA, will be the authority.

1.03 RELATED SECTIONS

A. Specific building enclosure commissioning requirements are given in this specification. The following specification sections are related to the work specified in this Section:
   1. Division 01 – General Commissioning Requirements
   2. Division 01 – Building Enclosure Functional Performance Requirements
   3. Division 03 – Concrete
   4. Division 04 – Masonry
   5. Division 07 – Thermal and Moisture Protection
   6. Division 08 – Openings

1.04 DEFINITIONS

A. Building Enclosure Commissioning Agent (BECxA): Contracted directly by the Owner. BECxA directs building enclosure commissioning activities, communicates directly with representatives of the project team, and leads efforts toward meeting the enclosure design intent.

B. Building Enclosure Testing Agent (BETA): Contracted directly by the owner. The BETA performs enclosure functional performance testing as directed by the BECxA. The BETA is often the same entity as the BECxA.

C. Commissioning Agent (CxA): Contracted to Owner. CxA directs building commissioning activities (typically mechanical and electrical systems) excluding BECx activities.

D. Building Enclosure Commissioning Plan (BECx Plan): Overall plan of building enclosure commissioning activities to provide information, criteria, schedule, and coordination.

E. Functional Performance Test (FPT): A standardized test of enclosure products, systems, or assemblies to determine the performance levels under simulated environmental conditions.

F. Test Specimen: The entire assembled unit submitted for test, including the joints and/or interfaces with adjacent products

G. Functional Mockup: A system of interfacing exterior components, representative of the enclosure, built specifically for performance testing. A mockup may be a stand alone structure or in-situ.

H. Deficiency: Condition of a building enclosure product, system, or assembly that is not in compliance with the Contract Documents, product installation instructions, or good industry practice.

I. Final Building Enclosure Commissioning Record (Final BECx Record): Overall record of all building enclosure commissioning activities provided at the conclusion of BECx activities.

1.05 COORDINATION

A. The BECxA shall receive a copy of all building enclosure related construction documents, submittals and shop drawings, addenda, and change orders directly from the Architect or General Contractor.

B. The BECxA shall distribute information and documentation to all responsible parties relative to the nature and extent of the communication.

C. The BECxA is primarily responsible to the Owner, and as such, shall regularly appraise the Owner, Architect, and General Contractor of enclosure progress, pending problems and/or deficiencies. Any potential change in the contractual and/or financial obligations of the Owner (credits, change orders, schedule changes, etc.) shall be identified as soon as possible.

D. The General Contractor shall incorporate BECx activities into the master construction schedule. The General Contractor is responsible for scheduling, notifications, and meeting minutes for these activities.

PART 2 – PRODUCTS (NOT USED)

PART 3 – EXECUTION

3.01 SYSTEMS TO BE COMMISSIONED

A. Systems to be commissioned include all building enclosure products, systems, and assemblies responsible for providing environmental separation including but not limited to:
   1. Below grade systems, such as foundation wall and slab on grade systems.
   2. Roofing systems, such as membrane and vegetative roof systems.
   3. Opaque wall and cladding systems, such as air barriers and metal panel systems.
   4. Fenestrations, such as windows and skylights.
   5. The interfaces between enclosure systems, such as sealants and expansion joints.

3.02 BUILDING ENCLOSURE COMMISSIONING IMPLEMENTATION

A. Design Phase Activities
   1. Architect to schedule a Design BECx Kickoff Meeting to review the Building Enclosure Commissioning process specifically focused on Design Phase activities including milestones, responsibilities, point of contact and distribution, expectations, and preliminary design advice based on Owner priorities.

2. The BECxA will review the Owners Project Requirements regarding air, moisture, and thermal performance and make recommendations to meet the design intent.
3. BECxA to develop a preliminary Building Enclosure Commissioning Plan (BECx Plan) to be updated throughout the project.
4. The Architect will provide the BECxA with drawings and specifications, in an electronic format, at outlined milestones. The BECxA will provide a review based on air, moisture, and thermal performance of the enclosure. The review will consist of marked up conditions and general design advice. The BECxA will attend a BECx Design Meeting corresponding to each design review.
5. Responses to all review comments is required. While the Architect is under no obligation to accept and incorporate all comments, an explanation for non-acceptance is expected.
6. All drawing and specification review comments and responses will be reported to the Owner in the Final BECx Record closeout documentation.
7. The BECxA will assist in the value engineering effort regarding possible modifications to the proposed enclosure systems.
8. The BECxA will provide a Building Enclosure Commissioning Requirements specification to the Architect for incorporation into the Contract Documents.
9. The BECxA will provide a Functional Performance Testing Requirements specification to the Architect for incorporation into the Contract Documents.

B. Preconstruction Phase Activities
1. The Architect or General Contractor shall provide the BECxA with enclosure related documentation (submittals, manufacture's performance data, shop drawings, etc.) for review against the Contract Documents and design intent. This review should be performed prior to or concurrent with the Architect review.
2. The BECxA will assist in the review of Contract Document modifications, substitution requests, ASIs, and Change Orders for enclosure related products, systems, and assemblies.
3. The BECxA will develop a schedule of BECx activities and functional performance testing milestones for inclusion into the master construction schedule.
4. The BECxA will conduct a Preconstruction BECx Kickoff Meeting to review the Building Enclosure Commissioning process specifically focused on Construction activities including milestones, responsibilities, point of contact and distribution, expectations, testing, and common enclosure deficiency items.
5. The Preconstruction BECx Kickoff Meeting should include representative of the Owner, Architect, General Contractor, and all enclosure related subcontractors (installers of the roof, sheathing, air barrier, masonry, glazing, and waterproofing systems)

C. Construction Phase Activities
1. The BECxA will participate in periodic enclosure meetings with representative of the Owner, Architect, General Contractor, and related subcontractors to discuss details and design considerations, scheduling, answer enclosure related questions, review ongoing deficiency list, and review functional performance testing.
2. The BECxA will review the mockup prior to the BETA functional performance testing to ensure the installation meets the requirements of the Contract Documents and is representative of the products and systems submitted.
3. The BECxA will participate in the functional performance testing of the mockup conducted by the BETA (the BECxA and BETA may be the same entity). Mockup testing will be conducted in accordance with specification section 019117 Building Enclosure Functional Performance Testing Requirements.
4. The BECx will assist the General Contractor and related subcontractors in the determination of failure conditions and the appropriate method of remediation.
5. Where testing indicates performance requirements are not met, the contractor shall repair or replace the failed sections. All costs associated with the repair and re-testing shall be the responsibility of the contractor. Retesting shall be conducted by the BETA under similar conditions which resulted in the initial failure, or as directed by the BECxA.

6. The BECxA will perform periodic site inspections to observe the ongoing installation of the building enclosure. Deviations from the Contract Documents, product installation instructions, or good industry practice will be noted in a BECx Observation Report.
7. Conditions noted in the BECx Observation Report will be discussed with the General Contractor while on site. If a condition can be remediated during the site inspection it will be issued as closed.
8. The BECx Observation Report will be distributed by the BECxA to the project team within 72 hours of the site inspection.
9. Written responses to all noted conditions are required. While the General Contractor is under no obligation to accept and remediate all conditions, an explanation for non-acceptance is expected.
10. All costs associated with the remediation of noted conditions shall be the responsibility of the contractor.
11. The General Contractor shall verify, and allow the BECxA to verify, remediation of noted conditions prior to concealment or removal of access.
12. All BECx Observation Reports and responses will be reported to the Owner in the Final BECx Record closeout documentation. Unresolved conditions may result in significant re-work time and cost if the Owner determines the condition deficient.
13. The BECxA will participate in the functional performance testing of the building conducted by the BETA (the BECxA and BETA may be the same entity). Building testing will be conducted in accordance with specification section 019117 Building Enclosure Functional Performance Testing Requirements.
14. The BECx will assist the General Contractor and related subcontractors in the determination of failure conditions and the appropriate method of remediation.
15. Where testing indicates performance requirements are not met, the contractor shall repair or replace the failed sections. All costs associated with the repair and re-testing shall be the responsibility of the contractor. Retesting shall be conducted by the BETA under similar conditions which resulted in the initial failure, or as directed by the BECxA.
16. Failed tests typically result in testing of additional similar locations at the discretion of the Owner. The costs of additional testing shall be the responsibility of the contractor. Testing shall be concluded only when satisfactory results are achieved.
17. If deficient conditions are observed during functional performance testing the testing may require re-scheduling. All costs associated with the re-scheduled testing shall be the responsibility of the contractor. The BECxA shall not overlook deficient work or loosen acceptance criteria to satisfy scheduling or cost concerns unless directed to do so in writing by the Owner.
18. At the owner’s discretion, the BECxA will participate in the E779 Whole Building Air Test (WBAT) conducted by the BETA (the BECxA and BETA may be the same entity). The Whole Building Air Test will be conducted in accordance with specification section 019117 Building Enclosure Functional Performance Testing Requirements.
19. The BECxA will conduct a WBAT Preparation Meeting approximately 1 month prior to the WBAT to explain the test procedure, preparation requirements, expectations, test requirements, and scheduling. The meeting should include representative of the Owner, Architect, General Contractor, CxA, controls, mechanical subcontractor, electrical subcontractor, and glazing subcontractor.
20. The BECxA will perform a site inspection in conjunction with the WBAT Preparation Meeting to address concerns specifically related to WBAT performance.
21. Results of the WBAT will be available immediately upon completion of testing. The BETA will provide a WBAT Field Test Report to the Owner, BECxA, Architect, and General Contractor, within 28 days of the conclusion of the testing activity.
22. If the results of the WBAT indicate the functional performance requirements have not been met the BECxA will assist the Owner and General Contractor in the development of a remediation plan. All costs associated with the remediation shall be the responsibility of the contractor, including but not limited to, selective demolition and repair, occupancy

delays, additional BECx site inspections and testing, and other costs as determined by the Owner.

D. Closeout Activities
   1. The General Contractor shall provide the BECxA with enclosure related operation and maintenance plans for review against the Contract Documents and design intent.
   2. The BECxA will issue a Final BECx Record at the completion of all BECx activities. The Final BECx Record will include a summary of all BECx activities and an overall opinion to the buildings ability to meet performance goals. The Final BECx Record will include all drawing and specification reviews, comments and responses, BECx and FPT specifications, submittal reviews, observation reports, noted condition responses, functional performance test reports, and reviewed operational and maintenance plans.

END OF SECTION 019115

This page intentionally left blank

SECTION 019117
BUILDING ENCLOSURE FUNCTIONAL PERFORMANCE TESTING REQUIREMENTS

PART 1 GENERAL

1.01 REFERENCE STANDARDS

A. AAMA 501.2 - Quality Assurance and Diagnostic Water Leakage Field Check of Installed Storefronts, Curtain Walls, and Sloped Glazing Systems; 2015.

B. ASTM C1521 - Standard Practice for Evaluating Adhesion of Installed Weatherproofing Sealant Joints; 2019 (Reapproved 2020).

C. ASTM D4541 - Standard Test Method for Pull-Off Strength of Coatings Using Portable Adhesion Testers; 2022.

D. ASTM E779 - Standard Test Method for Determining Air Leakage Rate by Fan Pressurization; 2019.

E. ASTM E783 - Standard Test Method for Field Measurement of Air Leakage Through Installed Exterior Windows and Doors; 2002 (Reapproved 2018).

F. ASTM E1105 - Standard Test Method for Field Determination of Water Penetration of Installed Exterior Windows, Skylights, Doors, and Curtain Walls, by Uniform or Cyclic Static Air Pressure Difference; 2015 (Reapproved 2023).

G. ASTM E1186 - Standard Practices for Air Leakage Site Detection in Building Envelopes and Air Barrier Systems; 2017.

1.02 RELATED DOCUMENTS

A. Drawings and general provisions of the Contract, including General and Supplementary Conditions and other Division 01 Specification Sections, apply to this Section.

B. State of Utah, DFCM HPBS Functional Mockup Design, Preparation, and Testing Guide

1.03 SUMMARY

A. The work under this Section is subject to requirements of the Contract Documents, including the Owner’s General Conditions and articles of the Construction Manager’s General Conditions.

B. This Section includes the functional performance testing requirements for the Building Enclosure systems. Refer to Section 019115 for Building Enclosure Commissioning Requirements

C. Building Enclosure Functional Performance Testing does not take away from, or reduce responsibility of, system designers or installing contractors to provide a finished and fully functioning product. This Section shall in no way diminish the responsibility of installers in performing all aspects of work and testing as outlined in the Contract Documents. Where conflicts occur regarding enclosure functional performance testing criteria this Section shall supersede. Where conflicts occur regarding required enclosure functional performance testing the Architect, in consultation with the BECxA, will be the authority.

1.04 RELATED SECTIONS

A. Specific building enclosure functional performance testing requirements are given in this Section. The following specification sections are related to the work specified in this Section:
   1. Division 01 – General Commissioning Requirements
   2. Division 01 – Building Enclosure Commissioning Requirements
   3. Division 03 – Concrete
   4. Division 04 – Masonry
   5. Division 07 – Thermal and Moisture Protection
   6. Division 08 – Openings

1.05 DEFINITIONS

A. Building Enclosure Commissioning Agent (BECxA): Contracted directly by the Owner. BECxA directs building enclosure commissioning activities, communicates directly with representatives

of the project team, and leads efforts toward meeting the enclosure design intent.

B. Building Enclosure Testing Agent (BETA): Contracted directly by the owner. The BETA performs enclosure functional performance testing as directed by the BECxA. The BETA is often the same entity as the BECxA.

C. Commissioning Agent (CxA): Contracted to Owner. CxA directs building commissioning activities (typically mechanical and electrical systems) excluding BECx activities.

D. Functional Performance Test (FPT): A standardized test of enclosure products, systems, or assemblies to determine the performance levels under simulated environmental conditions.

E. Test Specimen: The entire assembled unit submitted for test, including the joints and/or interfaces with adjacent products

F. Functional Mockup: A system of interfacing exterior components, representative of the enclosure, built specifically for performance testing. A mockup may be a stand alone structure or in-situ.

G. Deficiency: Condition of a building enclosure product, system, or assembly that is not in compliance with the Contract Documents, product installation instructions, or good industry practice.

1.06 COORDINATION

A. The General Contractor shall coordinate the testing activities with the BECxA. Testing activities should be attended by representatives of the Owner, Architect, General Contractor, and all enclosure related subcontractors whose systems are being evaluated. The General Contractor is responsible for testing activity scheduling and notifications.

B. The General Contractor shall coordinate the sequencing of installation to allow testing of the products and systems prior to the installation of exterior claddings and insulation. Additionally, interior insulation and gypsum wall board should not be installed within 3 feet (91.44 cm) of the test locations.

1.07 REPORTING

A. The BETA will provide a Field Test Report to the Owner, BECxA, Architect, and General Contractor, within 14 days of the conclusion of the testing activity. Field Test Reports shall be in conformance with the reporting requirements of the Test Method(s) utilized.

B. The BETA shall provide a final summary report to the BECxA at the conclusion of all testing to be included in the BECxA closeout documentation.

1.08 PERFORMANCE REQUIREMENTS

A. The functional performance criteria below apply to all mockup and field testing of exterior enclosure components.
   1. Curtain Wall/Storefront/Window Wall/Fenestrations
      a. ASTM E783 – Maximum air leakage of 0.09 cfm/sf when tested under a differential air pressure of 6.24 psf.
      b. ASTM E1105 – No uncontrolled water leakage when tested under a differential air pressure of 8.0 psf.
      c. AAMA 501.2 – No uncontrolled water leakage when tested at 30 psi (206.84 kPa) water pressure (used diagnostically to assist in leakage identification).
      d. ASTM E1521 (Method A) – Cohesive failure after sealant elongation percentage requirement.
   2. Skylights
      a. AAMA 501.2 – No uncontrolled water leakage when tested at 30 psi (206.84 kPa) water pressure.
   3. Air Barrier/Air Barrier Assemblies
      a. ASTM E783 – Maximum air leakage of 0.04 cfm/sf when tested under a differential air pressure of 1.57 psf.

b. ASTM E1186 (4.2.6) – Qualitative air testing performed in conjunction with ASTM E783. No performance requirements.
c. ASTM E1186 (4.2.7) – No bubbles shall be observed in the leak detection liquid.
d. ASTM D4541 – Minimum adhesion strength of 16 lbf/sq. inch.
e. ASTM E1105 – No uncontrolled water leakage when tested under a differential air pressure of 8.0 psf.

4. Roof Systems
   a. ASTM E1186 (4.2.7) – No bubbles shall be observed in the leak detection liquid.
5. Whole Building
   a. ASTM E779 – Maximum air leakage of 0.25 cfm/sf when tested under a differential air pressure of 75 Pa.
   b. ASTM E1186 (4.2.1) – Qualitative infrared thermography performed in conjunction with ASTM E779. No performance requirements.
   c. The ASTM E779 and ASTM E1186 (4.2.1), Whole Building Air Test (WBAT) and Infrared Thermography, to be performed at the owner's discretion.

B. Water leakage is only acceptable if all the following conditions are satisfied:
   1. Water is contained and drained to the exterior through the correct operation of the system.
   2. There is no wetting of a surface that would be visible to the building occupants.
   3. There would be no staining or other damage to the completed building or finishes.

C. Where testing indicates performance requirements are not met, the contractor shall repair or replace the failed sections. All costs associated with the repair and re-testing shall be the responsibility of the contractor. Retesting shall be conducted by the BETA under similar conditions which resulted in the initial failure, or as directed by the BECxA.

D. Failed tests typically result in testing of additional similar locations at the discretion of the Owner. The costs of additional testing shall be the responsibility of the contractor. Testing shall be concluded only when satisfactory results are achieved.

1.09 MOCKUP TEST REQUIREMENTS

A. An in-situ functional performance mockup of the enclosure shall be constructed. The in-situ mockup is typically a section of the building completed ahead of the schedule for the purpose of testing. The mockup shall be constructed air and water tight using the same materials, installation, personnel, and details as the building.
   1. The in-situ mockup should include:
      a. At least two window systems representative of the typical window type to be used on the building,
      b. wall-to-foundation interfaces,
      c. a representative sample of each cladding attachment mechanism, testing requires special installation of continuous z-girts or cladding receptors as they must be installed in a section no longer than 13 inches (330.2 mm),
      d. no less than 100 sf of opaque wall surrounding the window systems,
      e. typical air barrier penetrations such as pipe and conduits (these may be removed and patched after testing is complete if they are not in proper position),
      f. access to the interior.
   2. Exterior claddings and insulation should not be installed prior to testing.
   3. Interior finishes, interior gypsum wall board, or insulation should not be installed prior to mockup testing.

B. The coordination and construction of the mockup is the responsibility of the General Contractor.

C. Further enclosure elements should not be installed on the building prior to the completion of all functional performance tests on the mockup.

D. The General Contractor is required to provide the BETA: free and clear access to the test areas, lifts and/or scaffolding as required to fully access the interior and exterior of the test specimens, a water source capable of providing 5 gallons of water per hour per square foot of

the test specimen (within 200 ft of the test area), a 110-volt power supply (within 100 ft of the test area), and temporary protection of venerable areas from excess moisture related to functional performance testing.

E. The functional performance testing of the mockup may include:
   1. AAMA 501.2, Quality Assurance and Diagnostic Water Leakage Field Check of Installed Storefronts, Curtain Walls and Sloped Glazing Systems
   2. ASTM C1521 (Method A), Standard Practice for Evaluating Adhesion of Installed Weatherproofing Sealant Joints
   3. ASTM D4541, Standard Test Method for Pull-Off Strength of Coatings Using Portable Adhesion Testers
   4. ASTM E783 (modified), Standard Test Method for Field Measurement of Air Leakage Through Installed Exterior Windows and Doors
   5. ASTM E1105, Standard Test Method for Field Determination of Water Penetration of Installed Exterior Windows, Skylights, Doors, and Curtain Walls, by Uniform or Cyclic Static Air Pressure Difference
   6. ASTM E1186 (Practice 4.2.6), Standard Practices for Air Leakage Site Detection in Building Envelopes and Air Barrier Systems – Smoke Tracers
   7. ASTM E1186 (Practice 4.2.7), Standard Practices for Air Leakage Site Detection in Building Envelopes and Air Barrier Systems – Bubble Test

1.10 FIELD TEST REQUIREMENTS

A. Field testing should be completed prior to the installation of exterior claddings and insulation. Additionally, interior insulation and gypsum wall board should not be installed within 3 feet (91.44 cm) of the test locations.

B. The General Contractor is required to provide the BETA: free and clear access to the test areas, lifts and/or scaffolding as required to fully access the interior and exterior of the test specimens, a water source capable of providing 5 gallons of water per hour per square foot of the test specimen (within 200 ft of the test area), a 110-volt power supply (within 100 ft of the test area), and temporary protection of venerable areas from excess moisture related to functional performance testing.

C. The functional performance testing of the building may include:
   1. AAMA 501.2, Quality Assurance and Diagnostic Water Leakage Field Check of Installed Storefronts, Curtain Walls and Sloped Glazing Systems
   2. ASTM C1521 (Method A), Standard Practice for Evaluating Adhesion of Installed Weatherproofing Sealant Joints
   3. ASTM D4541, Standard Test Method for Pull-Off Strength of Coatings Using Portable Adhesion Testers
   4. ASTM E779, Standard Test Method for Determining Air Leakage Rate by Fan Pressurization.
      a. Enclosure area square footage calculations are required from the Architect at least 30 days prior to the test.
      b. Significant preparations of the building are required by the General Contractor prior to the E779 Whole Building Air Test, including but not limited to:
         1) the building to remain unoccupied for the duration of the testing,
         2) intentional openings such as air intakes, louvers, damper, and vents must be sealed,
         3) exterior doors and windows closed and locked,
         4) interior doors and selected ceiling tiles must be opened to allow consistent pressurization,
         5) plumbing traps primed,
         6) mechanical equipment must be disabled or put in standby mode.
   5. ASTM E783 (modified), Standard Test Method for Field Measurement of Air Leakage Through Installed Exterior Windows and Doors

6. ASTM E1105, Standard Test Method for Field Determination of Water Penetration of Installed Exterior Windows, Skylights, Doors, and Curtain Walls, by Uniform or Cyclic Static Air Pressure Difference
7. ASTM E1186 (Practice 4.2.1), Standard Practices for Air Leakage Site Detection in Building Envelopes and Air Barrier Systems – Infrared Thermography (performed in conjunction with ((ASTM E779)))
8. ASTM E1186 (Practice 4.2.6), Standard Practices for Air Leakage Site Detection in Building Envelopes and Air Barrier Systems – Smoke Tracers
9. ASTM E1186 (Practice 4.2.7), Standard Practices for Air Leakage Site Detection in Building Envelopes and Air Barrier Systems – Bubble Test

PART 2 – PRODUCTS (NOT USED)

PART 3 – EXECUTION (NOT USED)

END OF SECTION 019117

This page intentionally left blank

SECTION 031000
CONCRETE FORMING AND ACCESSORIES

PART 1 GENERAL

1.01 SECTION INCLUDES

A. Formwork for cast-in-place concrete, with shoring, bracing and anchorage.

B. Openings for other work.

C. Form accessories.

D. Form stripping.

1.02 RELATED REQUIREMENTS

A. Section 032000 - Concrete Reinforcing.

B. Section 033000 - Cast-in-Place Concrete.

C. Section 042000 - Unit Masonry: Reinforcement for masonry.

D. Section 051200 - Structural Steel Framing: Placement of embedded steel anchors and plates in cast-in-place concrete.

E. Section 052100 - Steel Joist Framing: Placement of embedded steel anchors, plates and joist seats in cast-in-place concrete.

F. Section 053100 - Steel Decking: Placement of steel anchors in composite decking.

1.03 REFERENCE STANDARDS

A. ACI CODE-318 - Building Code Requirements for Structural Concrete and Commentary; 2019 (Reapproved 2022).

B. ACI SPEC-117 - Specification for Tolerances for Concrete Construction and Materials; 2010 (Reapproved 2015).

C. ACI SPEC-301 - Specifications for Concrete Construction; 2020.

PART 2 PRODUCTS

2.01 FORMWORK - GENERAL

A. Provide concrete forms, accessories, shoring, and bracing as required to accomplish cast-in-place concrete work.

B. Design and construct concrete that complies with design with respect to shape, lines, and dimensions.

C. Comply with applicable state and local codes with respect to design, fabrication, erection, and removal of formwork.

2.02 REMOVABLE PREFABRICATED FORMS

A. Manufacturers:
   1. Molded Fiber Glass Construction Products Co: www.mfgcp.com/#sle.
   2. S-Form; Aluminum Formwork Systems: www.s-form.us/#sle.
   3. SureVoid Products, Inc: www.surevoid.com/#sle.
   4. Substitutions: See Section 016000 - Product Requirements.

2.03 FORMWORK ACCESSORIES

A. Form Ties: Snap-off type, galvanized metal, fixed length, 1 inch back break dimension, (25 mm back break dimension,) free of defects that could leave holes larger than 1 inch (25 mm) in concrete surface.

B. Form Release Agent: Capable of releasing forms from hardened concrete without staining or discoloring concrete or forming bugholes and other surface defects, compatible with concrete and form materials, and not requiring removal for satisfactory bonding of coatings to be applied.
   1. Do not use materials containing diesel oil or petroleum-based compounds.

2. Composition: Colorless, reactive, water-based compound.

C. Waterstops: Bentonite and butyl rubber.
1. Configuration: As indicated on drawings.
2. Size: As indicated on drawings.

PART 3 EXECUTION

3.01 EXAMINATION

A. Verify lines, levels and centers before proceeding with formwork. Ensure that dimensions agree with drawings.

3.02 ERECTION - FORMWORK

A. Erect formwork, shoring and bracing to achieve design requirements, in accordance with requirements of ACI SPEC-301.

B. Provide bracing to ensure stability of formwork. Shore or strengthen formwork subject to overstressing by construction loads.

C. Coordinate this section with other sections of work that require attachment of components to formwork.

3.03 APPLICATION - FORM RELEASE AGENT

A. Apply form release agent on formwork in accordance with manufacturer's recommendations.

B. Apply prior to placement of reinforcing steel, anchoring devices, and embedded items.

3.04 INSERTS, EMBEDDED PARTS, AND OPENINGS

A. Provide formed openings where required for items to be embedded in passing through concrete work.

B. Locate and set in place items that will be cast directly into concrete.

C. Install waterstops in accordance with manufacturer's instructions, so they are continuous without displacing reinforcement.

3.05 FORM CLEANING

A. Clean forms as erection proceeds, to remove foreign matter within forms.

B. Clean formed cavities of debris prior to placing concrete.

3.06 FORMWORK TOLERANCES

A. Construct formwork to maintain tolerances required by ACI SPEC-117, unless otherwise indicated.

3.07 FORM REMOVAL

A. Do not remove forms or bracing until concrete has gained sufficient strength to carry its own weight and imposed loads.

B. Loosen forms carefully. Do not wedge pry bars, hammers, or tools against finish concrete surfaces scheduled for exposure to view.

END OF SECTION 031000

SECTION 033000
CAST-IN-PLACE CONCRETE

PART 1 GENERAL

1.01 SECTION INCLUDES

A. Concrete formwork.

B. Floors and slabs on grade.

C. Concrete shear walls, elevator shaft walls, and foundation walls.

D. Concrete reinforcement.

E. Miscellaneous concrete elements, including equipment pads, equipment pits, light pole bases, flagpole bases, thrust blocks, and manholes.

1.02 RELATED REQUIREMENTS

A. Section 031000 - Concrete Forming and Accessories: Forms and accessories for formwork.

B. Section 032000 - Concrete Reinforcing.

C. Section 033511 - Concrete Floor Finishes: Densifiers, hardeners, applied coatings, and polishing.

D. Section 079200 - Joint Sealants: Products and installation for sealants and joint fillers for saw cut joints and isolation joints in slabs.

1.03 REFERENCE STANDARDS

A. ACI CODE-318 - Building Code Requirements for Structural Concrete and Commentary; 2019 (Reapproved 2022).

B. ACI PRC-211.1 - Selecting Proportions for Normal-Density and High Density-Concrete - Guide; 2022.

C. ACI PRC-302.1 - Guide to Concrete Floor and Slab Construction; 2015.

D. ACI PRC-347 - Guide to Formwork for Concrete; 2014 (Reapproved 2021).

E. ACI SPEC-301 - Specifications for Concrete Construction; 2020.

F. ASTM A615/A615M - Standard Specification for Deformed and Plain Carbon-Steel Bars for Concrete Reinforcement; 2022.

G. ASTM C33/C33M - Standard Specification for Concrete Aggregates; 2023.

H. ASTM C39/C39M - Standard Test Method for Compressive Strength of Cylindrical Concrete Specimens; 2023.

I. ASTM C94/C94M - Standard Specification for Ready-Mixed Concrete; 2024.

J. ASTM C150/C150M - Standard Specification for Portland Cement; 2022.

K. ASTM C476 - Standard Specification for Grout for Masonry; 2023.

L. ASTM C618 - Standard Specification for Coal Ash and Raw or Calcined Natural Pozzolan for Use in Concrete; 2023, with Editorial Revision.

M. ASTM C1240 - Standard Specification for Silica Fume Used in Cementitious Mixtures; 2020.

N. ASTM C1602/C1602M - Standard Specification for Mixing Water Used in the Production of Hydraulic Cement Concrete; 2022.

O. ASTM E1745 - Standard Specification for Plastic Water Vapor Retarders Used in Contact with Soil or Granular Fill under Concrete Slabs; 2017 (Reapproved 2023).

1.04 SUBMITTALS

A. See Section 013000 - Administrative Requirements for submittal procedures.

B. Product Data: Submit manufacturers' data on manufactured products showing compliance with specified requirements and installation instructions.

1. For curing compounds, provide data on method of removal in the event of incompatibility with floor covering adhesives.

C. Mix Design: Submit proposed concrete mix design.
   1. Indicate proposed mix design complies with requirements of ACI SPEC-301, Section 4 - Concrete Mixtures.
   2. Indicate proposed mix design complies with requirements of ACI CODE-318, Chapter 5 - Concrete Quality, Mixing and Placing.

D. Samples: Submit samples of underslab vapor retarder to be used.

E. Test Reports: Submit report for each test or series of tests specified.

PART 2 PRODUCTS

2.01 FORMWORK

A. Comply with requirements of Section 031000.

2.02 REINFORCEMENT MATERIALS

A. Comply with requirements of Section 032000.

B. Reinforcing Steel: See General Structural Notes

C. Reinforcement Accessories:
   1. Tie Wire: Annealed, minimum 16 gauge, 0.0508 inch (1.29 mm).
   2. Chairs, Bolsters, Bar Supports, Spacers: Sized and shaped for adequate support of reinforcement during concrete placement.

2.03 CONCRETE MATERIALS

A. Cement: See General Structural Notes

B. Fine and Coarse Aggregates: See General Structural Notes

C. Fly Ash: ASTM C618, Class C or F.

D. Silica Fume: ASTM C1240, proportioned in accordance with ACI PRC-211.1.

E. Water: ASTM C1602/C1602M; clean, potable, and not detrimental to concrete.

2.04 ACCESSORY MATERIALS

A. Underslab Vapor Retarder:
   1. Sheet Material: ASTM E1745, Class A; stated by manufacturer as suitable for installation in contact with soil or granular fill under concrete slabs. Single-ply polyethylene is prohibited.
   2. Accessory Products: Vapor retarder manufacturer's recommended tape, adhesive, mastic, prefabricated boots, etc., for sealing seams and penetrations.
   3. Products:
      a. Henry Company; Moistop Ultra 15: www.henry.com/#sle.
      b. ISI Building Products; Viper VaporCheck II 15-mil (Class A): www.isibp.com/#sle.
      c. Stego Industries, LLC; ____: www.stegoindustries.com/#sle.
      d. W. R. Meadows, Inc; PERMINATOR Class A - 15 mils (0.38 mm): www.wrmeadows.com/#sle.

END OF SECTION 033000

SECTION 033500
CONCRETE FINISHING

PART 1 GENERAL

1.01 REFERENCE STANDARDS

A. ASTM D3359 - Standard Test Methods for Rating Adhesion by Tape Test; 2023.

B. ASTM F150 - Standard Test Method for Electrical Resistance of Conductive and Static Dissipative Resilient Flooring; 2006 (Reapproved 2018).

1.02 SUMMARY

A. Section Includes:
   1. Single application cure-densifier-hardener for new and existing concrete floors.
   2. Precautions for avoiding staining concrete before and after application.

B. Related Section:
   1. Cast-In-Place Concrete: Division 03 Cast-In-Place Concrete sections.

1.03 REFERENCES

A. American National Standards Institute (ANSI):
   1. ANSI B101.1 Test Method for Measuring Wet SCOF of Common Hard-Surface Floors.
   2. ANSI B101.3 Test Method for Measuring Wet DCOF of Common Hard-Surface Floors.

B. ASTM International (ASTM):
   1. ASTM C779 Standard Test Method for Abrasion Resistance of Horizontal Concrete Surfaces.
   2. ASTM C805 Standard Test Method for Rebound Number of Hardened Concrete.
   3. ASTM D3359 Standard Test Methods for Measuring Adhesion by Tape Test.
   4. ASTM F150-06(2018) Standard Test Method for Electrical Resistance of Conductive and Static Dissipative Resilient Flooring.
   5. ASTM G23 Practice for Operating Light-Exposure Apparatus (Carbon-Arc Type) With and Without Water for Exposure of Nonmetallic Materials (Withdrawn 2000).

C. National Floor Safety Institute (NFSI):
   1. Certified as High Traction by the National Floor Safety Institute (NFSI), Phase 2 testing.

D. State of Utah DFCM High Performance Building Standard.

E. Health Product Declaration Collaborative (HPD)
   1. HPD v1.0.
   2. HPD v2.1.

1.04 SUBMITTALS

A. General: Submit listed submittals in accordance with Conditions of the Contract and Section 01 60 00 – Product Requirements for Submittal Procedures.

B. Product Data: Submit product data, including manufacturer’s Spec-Data® sheet, installation instructions and technical bulletins for specified products.

C. Certificates: Manufacturer’s certification that the installer is acceptable.

D. Maintenance Data: Maintenance instructions, including precautions for avoiding staining after application.

1.05 QUALITY ASSURANCE

A. Installer Qualifications: Acceptable to the manufacturer.

B. Regulatory Requirements: In accordance with Section [01 41 00 - Regulatory Requirements.

1.06 DELIVERY, STORAGE & HANDLING

A. General: Comply with Division 01 Product Requirements section.

B. Delivery: Deliver materials in manufacturer's original, unopened, undamaged containers with identification labels intact.

C. Storage and Protection: Store materials protected from exposure to harmful environmental conditions and at temperature and humidity conditions recommended by the manufacturer.

D. Handling: Protect materials from dirt, corrosion, oil, grease and other contaminants.

PART 2 PRODUCTS

2.01 MATERIAL

A. Manufacturer: Basis of Design: Curecrete Distribution, Inc.
   1. Contact: 1203 Spring Creek Place, Springville, UT 84663-0551; Telephone: (800) 998-5664, (801) 489-5663; Fax: (801) 489-3307; Email: info@ashfordformula.com; Website: www.ashfordformula.com.

B. Cure-Densifier-Hardener: Ashford Formula is a transparent, chemically reactive, water-based treatment that penetrates into the concrete surface, forming a chemical reaction of crystalline growth that fills in the natural pores and voids in the concrete surface.
   1. Abrasion Resistance to Revolving Disks: At least a 32.5% improvement over untreated samples when tested in accordance with ASTM C779.
   2. Surface Adhesion: At least a 22% increase in adhesion for epoxy when tested in accordance with ASTM D3359.
   3. Hardening: As follows when tested in accordance with ASTM C39:
      a. After 7 Days: An increase of at least 40% over untreated samples.
      b. After 28 Days: An increase of at least 38% over untreated samples.
   4. Rebound Number: An increase of at least 13.3% over untreated samples when tested in accordance with ASTM C805.
   5. Electrical Resistance: To ASTM F150.
   6. Light Exposure Degradation: No evidence of adverse effects on treated samples when tested in accordance with ASTM G23.
   7. Test Method for Measuring Wet SCOF of Common Hard-Surface Floors in accordance with ANSI B101.1.
   8. Test Method for Measuring Wet DCOF of Common Hard-Surface Floors in accordance with ANSI B101.3.
   9. Certified as High Traction by the National Floor Safety Institute (NFSI), Phase 2 testing.
   10. Certified Compliant according to California Department of Public Health CDPH/EHLB/Standard Method Version 1.2, 2017.

2.02 PRODUCT SUBSTITUTIONS

A. Substitutions: Substitutions in accordance with Section 01 25 00 - Product Substitution Procedures.

PART 3 EXECUTION

3.01 MANUFACTURER'S INSTRUCTIONS

A. Compliance: Comply with manufacturer's product data, including product technical bulletins, product catalog installation instructions and product carton instructions for installation.

3.02 EXAMINATION

A. Do not begin installation until substrates have been properly prepared and are suitable for application of product.

B. If substrate preparation is the responsibility of another installer, notify Architect of unsatisfactory preparation before proceeding.

3.03 PREPARATION

A. Clean surfaces thoroughly prior to installation.

B. Prepare surfaces using the methods recommended by the manufacturer for achieving the best result for the substrate under the project conditions.

C. Do not use frozen material. Thaw and agitate prior to use.

D. If construction equipment must be used for application, diaper all components that might drip oil, hydraulic fluid or other liquids.

3.04 INSTALLATION

A. New Concrete: Apply cure-densifier hardener to new concrete as soon as the concrete is firm enough to work on after troweling; with colored concrete, wait a minimum of 30 days before application.
   1. Spray on at rate of 2002 feet (61020.96 cm)/gal (5 sq yard (5 sq m)/L).
   2. Keep surface wet with cure-densifier-hardener for a minimum soak-in period of 30 minutes without allowing it to dry or become slippery. If slipperiness occurs before the 30 minute time period has elapsed, apply additional cure-densifier-hardener, as needed, to keep the entire surface in a non-slippery state for the first 15 minutes; for the remaining 15 minutes, mist the surface as needed with water to keep the material in a non-slippery state. In hot weather conditions, follow manufacturer's special application procedures.
   3. When the treated surface becomes slippery after this period, lightly mist with water until slipperiness disappears.
   4. Wait for surface to become slippery again, and then flush entire surface with water to remove all cure-densifier-hardener residue.
   5. Squeegee surface completely dry, flushing any remaining slippery areas until no residue remains.
   6. Wet vacuum or scrubbing machines can be used in accordance with manufacturer's instructions to remove residue.

3.05 PROTECTION

A. Protect installed floors for at least 3 months until chemical reaction process is complete.
   1. Do not allow traffic on floors for 3 hours after application.
   2. Do not allow parking of vehicles on concrete slab.
   3. If vehicles must be temporarily parked on slab, place drop cloths under vehicles during entire time parked.
   4. Do not allow pipe cutting using pipe cutting machinery on concrete slab.
   5. Do not allow temporary placement and storage of steel members on concrete slabs.
   6. Clean up spills immediately and spot-treat stains with degreaser or oil emulsifier.
   7. Clean floor regularly in accordance with manufacturer's recommendations.

END OF SECTION 033500

This page intentionally left blank

SECTION 042000
UNIT MASONRY

PART 1 GENERAL

1.01 SECTION INCLUDES

A. Concrete block.

B. Mortar and grout.

C. Reinforcement and anchorage.

D. Flashings.

E. Accessories.

1.02 RELATED REQUIREMENTS

A. Section 031000 - Concrete Forming and Accessories: Dovetail slots for masonry anchors.

B. Section 032000 - Concrete Reinforcing: Reinforcing steel for grouted masonry.

C. Section 033000 - Cast-in-Place Concrete: Installation of dovetail slots for masonry anchors.

D. Section 040511 - Masonry Mortaring and Grouting.

E. Section 055000 - Metal Fabrications: Loose steel lintels.

F. Section 079200 - Joint Sealants: Sealing control and expansion joints.

1.03 REFERENCE STANDARDS

A. ASTM A240/A240M - Standard Specification for Chromium and Chromium-Nickel Stainless Steel Plate, Sheet, and Strip for Pressure Vessels and for General Applications; 2023a.

B. ASTM A615/A615M - Standard Specification for Deformed and Plain Carbon-Steel Bars for Concrete Reinforcement; 2022.

C. ASTM A641/A641M - Standard Specification for Zinc-Coated (Galvanized) Carbon Steel Wire; 2019.

D. ASTM A951/A951M - Standard Specification for Steel Wire for Masonry Joint Reinforcement; 2022.

E. ASTM A1064/A1064M - Standard Specification for Carbon-Steel Wire and Welded Wire Reinforcement, Plain and Deformed, for Concrete; 2022.

F. ASTM C90 - Standard Specification for Loadbearing Concrete Masonry Units; 2023.

G. ASTM C91/C91M - Standard Specification for Masonry Cement; 2023.

H. ASTM C140/C140M - Standard Test Methods for Sampling and Testing Concrete Masonry Units and Related Units; 2023a.

I. ASTM C144 - Standard Specification for Aggregate for Masonry Mortar; 2018.

J. ASTM C150/C150M - Standard Specification for Portland Cement; 2022.

K. ASTM C270 - Standard Specification for Mortar for Unit Masonry; 2019a, with Editorial Revision.

L. ASTM C404 - Standard Specification for Aggregates for Masonry Grout; 2024.

M. ASTM C476 - Standard Specification for Grout for Masonry; 2023.

N. ASTM C780 - Standard Test Methods for Preconstruction and Construction Evaluation of Mortars for Plain and Reinforced Unit Masonry; 2023.

O. ASTM C979/C979M - Standard Specification for Pigments for Integrally Colored Concrete; 2016.

P. ASTM C1072 - Standard Test Methods for Measurement of Masonry Flexural Bond Strength; 2022.

Q. ASTM C1314 - Standard Test Method for Compressive Strength of Masonry Prisms; 2023b.

R. ASTM E514/E514M - Standard Test Method for Water Penetration and Leakage Through Masonry; 2020.

S. BIA Technical Notes No. 7 - Water Penetration Resistance – Design and Detailing; 2017.

T. BIA Technical Notes No. 13 - Ceramic Glazed Brick Exterior Walls; 2017.

U. TMS 402/602 - Building Code Requirements and Specification for Masonry Structures; 2022, with Errata (2024).

1.04 SUBMITTALS

A. See Section 013000 - Administrative Requirements for submittal procedures.

B. Product Data: Provide data for masonry units, mortar, and masonry accessories.

C. Manufacturer's Certificate: Certify that water repellent admixture manufacturer has certified masonry unit manufacturer as an approved user of water repellent admixture in the manufacture of concrete block.

1.05 QUALITY ASSURANCE

A. Comply with provisions of TMS 402/602, except where exceeded by requirements of Contract Documents.

1.06 DELIVERY, STORAGE, AND HANDLING

A. Deliver, handle, and store masonry units by means that will prevent mechanical damage and contamination by other materials.

PART 2 PRODUCTS

2.01 CONCRETE MASONRY UNITS

A. Concrete Block: Comply with referenced standards and as follows:
   1. Size: Standard units with nominal face dimensions of 16 by 8 inches (400 by 200 mm) and nominal depth of 8 inches (200 mm).
   2. Load-Bearing Units: ASTM C90, normal weight.
   3. Units with Integral Water Repellent: Concrete block units as specified in this section with polymeric liquid admixture added to concrete masonry units at time of manufacture.
      a. Performance of Units with Integral Water Repellent:
         1) Water Permeance: When tested per ASTM E514/E514M and for a minimum of 72 hours.
            (a) No water visible on back of wall above flashing at the end of 24 hours.
            (b) No flow of water from flashing equal to or greater than 0.032 gallons per hour (0.05 L per hour) at the end of 24 hours.
            (c) No more than 25 percent of wall area above flashing visibly damp at end of test.
         2) Flexural Bond Strength: ASTM C1072; minimum 10 percent increase.
         3) Compressive Strength: ASTM C1314; maximum 5 percent decrease.
      b. Use only in combination with mortar that also has integral water repellent admixture.
      c. Use water repellent admixtures for masonry units and mortar by a single manufacturer.
   4. Standard Units with Factory-Installed Insulation Inserts: ASTM C90, normal weight.
      a. Insulation Type: Manufacturer's standard expanded polystyrene (XPS).

2.02 MORTAR AND GROUT MATERIALS

A. Portland Cement: ASTM C150/C150M, Type I; color as required to produce approved color sample.

B. Pigments for Colored Mortar: Pure, concentrated mineral pigments specifically intended for mixing into mortar and complying with ASTM C979/C979M.
   1. Manufacturers:
      a. Davis Colors, a division of Venator Materials PLC: www.daviscolors.com/#sle.

b. Lambert Corporation: www.lambertusa.com/#sle.
c. Solomon Colors, Inc: www.solomoncolors.com/#sle.

C. Water: Clean and potable.

D. Integral Water Repellent Admixture for Mortar: Polymeric liquid admixture added to mortar at the time of manufacture.
1. Use only in combination with masonry units manufactured with integral water repellent admixture.
2. Use only water repellent admixture for mortar from the same manufacturer as water repellent admixture in masonry units.
3. Meet or exceed performance specified for water repellent admixture used in masonry units.

2.03 REINFORCEMENT AND ANCHORAGE

A. Manufacturers:
1. 3GEN Masonry Products: www.3genmp.com.
2. Blok-Lok Limited: www.blok-lok.com/#sle.
3. Hohmann & Barnard, Inc; X-Seal Anchor: www.h-b.com/#sle.
4. TruFast Walls, a division of Altenloh, Brinck & Co. US, Inc; Thermal-Grip MVA: www.trufastwalls.com/#sle.
5. WIRE-BOND: www.wirebond.com/#sle.
6. Substitutions: See Section 016000 - Product Requirements.

B. Reinforcing Steel: Type _____ , as specified in Section 032000; size as indicated on drawings; galvanized finish.

C. Single Wythe Joint Reinforcement: ASTM A951/A951M.
1. Type: Truss or ladder.
2. Material: ASTM A1064/A1064M steel wire, mill galvanized to ASTM A641/A641M Class 3.

D. Masonry Veneer Anchors: See General Structural Notes.

2.04 FLASHINGS

A. Combination Non-Asphaltic Flashing Materials - Stainless Steel:
1. Stainless Steel Flashing - Self-adhering: ASTM A240/A240M; 2 mil (0.05 mm) type 304 stainless steel sheet with 8 mil (0.20 mm) of butyl adhesive and a removable release liner.
a. Manufacturers:
1) STS Coatings, Inc: www.stscoatings.com/#sle.
2) VaproShield, LLC: www.vaproshield.com/#sle.
3) WIRE-BOND: www.wirebond.com/#sle.
4) York Manufacturing, Inc; York 304: www.yorkmfg.com/#sle.

B. Drip Edge: Stainless steel; angled drip with hemmed edge; compatible with membrane and adhesives.
1. Manufacturers:
a. Hohmann & Barnard, Inc: www.h-b.com/#sle.
b. Mortar Net Solutions; Metal Drip Edges: www.mortarnet.com/#sle.
c. York Manufacturing, Inc: www.yorkmfg.com/#sle.
d. Substitutions: See Section 016000 - Product Requirements.

2.05 ACCESSORIES

A. Cavity Mortar Control: Semi-rigid polyethylene or polyester mesh panels, sized to thickness of wall cavity, and designed to prevent mortar droppings from clogging weeps and cavity vents and allow proper cavity drainage.

B. Weeps:
1. Type: Extruded propylene with honeycomb design.

2. Color(s): As selected by Architect from manufacturer's full range.
3. Manufacturers:
   a. Advanced Building Products, Inc: www.advancedbuildingproducts.com/#sle.
   b. Blok-Lok Limited: www.blok-lok.com/#sle.
   c. CavClear, a Division of Archovations Inc: www.cavclear.com/#sle.
   d. Hohmann & Barnard, Inc: www.h-b.com/#sle.
   e. Masonry Technology, Inc; Cavity Weep: www.mtidry.com/#sle.
   f. Mortar Net Solutions; WeepVent: www.mortarnet.com/#sle.
   g. Substitutions: See Section 016000 - Product Requirements.

C. Cleaning Solution: Non-acidic, not harmful to masonry work or adjacent materials.

2.06 MORTAR AND GROUT MIXING

A. Mortar for Unit Masonry: ASTM C270, using the Proportion Specification.
   1. Masonry below grade and in contact with earth: Type M.
   2. Exterior, loadbearing masonry: Type S.
   3. Interior, loadbearing masonry: Type S.

B. Grout: ASTM C476; consistency required to fill completely volumes indicated for grouting; fine grout for spaces with smallest horizontal dimension of 2 inches (50 mm) or less; coarse grout for spaces with smallest horizontal dimension greater than 2 inches (50 mm).

C. Admixtures: Add to mixture at manufacturer's recommended rate and in accordance with manufacturer's instructions; mix uniformly.

PART 3 EXECUTION

3.01 EXAMINATION

A. Verify that field conditions are acceptable and are ready to receive masonry.

B. Verify that related items provided under other sections are properly sized and located.

C. Verify that built-in items are in proper location, and ready for roughing into masonry work.

3.02 PREPARATION

A. Direct and coordinate placement of metal anchors supplied for installation under other sections.

3.03 COLD AND HOT WEATHER REQUIREMENTS

A. Comply with requirements of TMS 402/602 or applicable building code, whichever is more stringent.

3.04 COURSING

A. Establish lines, levels, and coursing indicated. Protect from displacement.

B. Maintain masonry courses to uniform dimension. Form vertical and horizontal joints of uniform thickness.

C. Concrete Masonry Units:
   1. Bond: Running.

3.05 PLACING AND BONDING

A. Lay solid masonry units in full bed of mortar, with full head joints, uniformly jointed with other work.

B. Lay hollow masonry units with face shell bedding on head and bed joints.

C. Buttering corners of joints or excessive furrowing of mortar joints is not permitted.

D. Remove excess mortar and mortar smears as work progresses.

E. Remove excess mortar with water repellent admixture promptly. Do not use acids, sandblasting or high pressure cleaning methods.

F. Interlock intersections and external corners.

G. Do not shift or tap masonry units after mortar has achieved initial set. Where adjustment must be made, remove mortar and replace.

H. Perform job site cutting of masonry units with proper tools to provide straight, clean, unchipped edges. Prevent broken masonry unit corners or edges.

3.06 WEEPS/CAVITY VENTS

A. Install weeps in veneer and cavity walls at 24 inches (600 mm) on center horizontally on top of through-wall flashing above shelf angles and lintels and at bottom of walls.

3.07 CAVITY MORTAR CONTROL

A. Do not permit mortar to drop or accumulate into cavity air space or to plug weep/cavity vents.

B. Install cavity mortar diverter at base of cavity and at other flashing locations as recommended by manufacturer to prevent mortar droppings from blocking weep/cavity vents.

3.08 REINFORCEMENT AND ANCHORAGE - GENERAL AND SINGLE WYTHE MASONRY

A. Unless otherwise indicated on drawings or specified under specific wall type, install horizontal joint reinforcement 16 inches (400 mm) on center.

B. Place masonry joint reinforcement in first and second horizontal joints above and below openings. Extend minimum 16 inches (400 mm) each side of opening.

C. Embed longitudinal wires of joint reinforcement in mortar joint with at least 5/8 inch (16 mm) mortar cover on each side.

D. Lap joint reinforcement ends minimum 6 inches (150 mm).

3.09 REINFORCEMENT AND ANCHORAGE - MASONRY VENEER - SEE GENERAL STRUCTURAL NOTES

3.10 MASONRY FLASHINGS

A. Whether or not specifically indicated, install masonry flashing to divert water to exterior at all locations where downward flow of water will be interrupted.

1. Extend flashings full width at such interruptions and at least 6 inches (152 mm), minimum, into adjacent masonry or turn up flashing ends at least 1 inch (25.4 mm), minimum, to form watertight pan at nonmasonry construction.

3.11 LINTELS

A. Install loose steel lintels over openings per General Structural Notes

3.12 GROUTED COMPONENTS

A. Lap splices minimum 24 bar diameters.

B. Support and secure reinforcing bars from displacement. Maintain position within 1/2 inch (13 mm) of dimensioned position.

C. Place and consolidate grout fill without displacing reinforcing.

3.13 CONTROL AND EXPANSION JOINTS

A. Continue horizontal joint reinforcement through control or expansion joints.

3.14 TOLERANCES

A. Install masonry within the site tolerances found in TMS 402/602.

3.15 FIELD QUALITY CONTROL

A. An independent testing agency will perform field quality control tests, as specified in Section 014000 - Quality Requirements.

3.16 CLEANING

A. Clean soiled surfaces with cleaning solution.

3.17 PROTECTION

A. Without damaging completed work, provide protective boards at exposed external corners that are subject to damage by construction activities.

END OF SECTION 042000

SECTION 042613
MASONRY VENEER

PART 1 GENERAL

1.01 SECTION INCLUDES

A. Clay facing brick.

B. Mortar and grout.

C. Reinforcement and anchorage.

D. Flashings.

E. Installation of lintels.

F. Accessories.

1.02 RELATED REQUIREMENTS

A. Section 04200 - Unit Masonry for single wyth masonry

B. Section 054000 - Cold-Formed Metal Framing: Steel stud backup for masonry veneer.

C. Section 076200 - Sheet Metal Flashing and Trim: Through-wall masonry flashings.

D. Section 079200 - Joint Sealants: Sealing control and expansion joints.

E. Section 072100 Thermal Insulation for continious insuation behind masonry veneer and exterior wall panels.

1.03 REFERENCE STANDARDS

A. ASTM A153/A153M - Standard Specification for Zinc Coating (Hot-Dip) on Iron and Steel Hardware; 2023.

B. ASTM A240/A240M - Standard Specification for Chromium and Chromium-Nickel Stainless Steel Plate, Sheet, and Strip for Pressure Vessels and for General Applications; 2023a.

C. ASTM A615/A615M - Standard Specification for Deformed and Plain Carbon-Steel Bars for Concrete Reinforcement; 2022.

D. ASTM A641/A641M - Standard Specification for Zinc-Coated (Galvanized) Carbon Steel Wire; 2019.

E. ASTM A653/A653M - Standard Specification for Steel Sheet, Zinc-Coated (Galvanized) or Zinc-Iron Alloy-Coated (Galvannealed) by the Hot-Dip Process; 2023.

F. ASTM A951/A951M - Standard Specification for Steel Wire for Masonry Joint Reinforcement; 2022.

G. ASTM A1064/A1064M - Standard Specification for Carbon-Steel Wire and Welded Wire Reinforcement, Plain and Deformed, for Concrete; 2022.

H. ASTM C55 - Standard Specification for Concrete Building Brick; 2023.

I. ASTM C73 - Standard Specification for Calcium Silicate Brick (Sand-Lime Brick); 2023.

J. ASTM C90 - Standard Specification for Loadbearing Concrete Masonry Units; 2023.

K. ASTM C91/C91M - Standard Specification for Masonry Cement; 2023.

L. ASTM C150/C150M - Standard Specification for Portland Cement; 2022.

M. ASTM C207 - Standard Specification for Hydrated Lime for Masonry Purposes; 2018.

N. ASTM C216 - Standard Specification for Facing Brick (Solid Masonry Units Made from Clay or Shale); 2023.

O. ASTM C270 - Standard Specification for Mortar for Unit Masonry; 2019a, with Editorial Revision.

P. ASTM C404 - Standard Specification for Aggregates for Masonry Grout; 2024.

Q. ASTM C476 - Standard Specification for Grout for Masonry; 2023.

R. ASTM C652 - Standard Specification for Hollow Brick (Hollow Masonry Units Made from Clay or Shale); 2022.

S. BIA Technical Notes No. 7 - Water Penetration Resistance – Design and Detailing; 2017.

T. BIA Technical Notes No. 28B - Brick Veneer/Steel Stud Walls; 2005.

U. BIA Technical Notes No. 46 - Maintenance of Brick Masonry; 2017.

V. TMS 402/602 - Building Code Requirements and Specification for Masonry Structures; 2022, with Errata (2024).

1.04 SUBMITTALS

A. See Section 013000 - Administrative Requirements, for submittal procedures.

B. Product Data: Provide data for masonry units, fabricated wire reinforcement, and mortar.

C. Samples: Submit four samples of facing brick units to illustrate color, texture, and extremes of color range.

D. Manufacturer's Certificate: Certify that masonry units meet or exceed specified requirements.

1.05 MOCK-UP

A. Construct a masonry wall as a mock-up panel sized 8 feet (2.4 m) long by 6 feet (1.8 m) high; include mortar and accessories and structural backup in mock-up.

B. Locate where directed.

C. Mock-up may remain as part of the Work.

1.06 DELIVERY, STORAGE, AND HANDLING

A. Deliver, handle, and store masonry units by means that will prevent mechanical damage and contamination by other materials.

1.07 FIELD CONDITIONS

A. Cold and Hot Weather Requirements: Comply with requirements of TMS 402/602 or applicable building code, whichever is more stringent.

PART 2 PRODUCTS

2.01 UNIT MASONRY - GENERAL

2.02 BRICK UNITS

A. Manufacturers:
   1. Basis of Design - Interstate Brick https://interstatebrick.com/
   2. Substitutions: See Section 016000 - Product Requirements.

B. Facing Brick: ASTM C216, Type FBS Smooth, Grade SW.
   1. Color and texture to match Architect's sample.
   2. Nominal Size: Emperor 4 x 4 x 16
   3. Home / Face Brick / Sizes
   4. Special Shapes: Molded units as required by conditions indicated, unless standard units can be sawn to produce equivalent effect.

2.03 MORTAR AND GROUT MATERIALS

A. Masonry Cement: ASTM C91/C91M Type N.
   1. Colored Mortar: Premixed cement as required to match Architect's color sample.

B. Portland Cement: ASTM C150/C150M, Type I; color as required to produce approved color sample.

C. Hydrated Lime: ASTM C207, Type S.

D. Grout Aggregate: ASTM C404.

E. Water: Clean and potable.

2.04 REINFORCEMENT AND ANCHORAGE

A. Reinforcing Steel: ASTM A615/A615M, Grade 40 (40,000 psi) (280 MPa) yield strength, deformed billet bars; galvanized.

B. Joint Reinforcement Type: Use ladder type joint reinforcement where vertical reinforcement is involved and truss type elsewhere, unless otherwise indicated.

C. Joint Reinforcement Standard: ASTM A951/A951M.
   1. Type: Truss or ladder.
   2. Material: ASTM A1064/A1064M steel wire, mill galvanized to ASTM A641/A641M Class 3.
   3. Size: 0.1483 inch (3.8 mm) side rods with 0.1483 inch (3.8 mm) cross rods; width as required to provide not less than 5/8 inch (16 mm) of mortar coverage on each exposure.
   4. Manufacturers:
      a. 3GEN Masonry Products: www.3genmp.com.
      b. Hohmann & Barnard, Inc; HB 213 Veneer Anchor: www.h-b.com/#sle.
      c. WIRE-BOND: www.wirebond.com/#sle.
      d. Substitutions: See Section 016000 - Product Requirements.

D. Masonry Veneer Anchors: 2-piece anchors that permit differential movement between masonry veneer and structural backup, hot dip galvanized to ASTM A 153/A 153M, Class B.
   1. Anchor plates: Not less than 0.075 inch (1.91 mm) thick, designed for fastening to structural backup through sheathing by two fasteners; provide design with legs that penetrate sheathing and insulation to provide positive anchorage.
   2. Wire ties: Manufacturer's standard shape, 0.1875 inch (4.75 mm) thick.
   3. Vertical adjustment: Not less than 3-1/2 inches (89 mm).
   4. Seismic Feature: Provide lip, hook, or clip on end of wire ties to engage or enclose not less than one continuous horizontal joint reinforcement wire of 0.1483 inch (3.8 mm) diameter.
   5. Manufacturers:
      a. *Basis of Design* Hohmann & Barnard, Inc; Thermal 2-seal Tie: www.h-b.com/#sle.
      b. 3GEN Masonry Products: www.3genmp.com.
      c. TruFast Walls, a division of Altenloh, Brinck & Co. US, Inc; Thermal-Grip MVA: www.trufastwalls.com/#sle.
      d. Substitutions: See Section 016000 - Product Requirements.

2.05 FLASHINGS

A. Metal Flashing Materials: Stainless Steel, as specified in Section 076200.

B. Combination Non-Asphaltic Flashing Materials - Stainless Steel:
   1. Stainless Steel Flashing - Self-adhering: ASTM A240/A240M; 2 mil (0.05 mm) type 304 stainless steel sheet with 8 mil (0.20 mm) of butyl adhesive and a removable release liner.
      a. Manufacturers:
         1) 3GEN Masonry Products; GENFLASH SS SA: www.3genmp.com/#sle.
         2) STS Coatings, Inc: www.stscoatings.com/#sle.
         3) VaproShield, LLC: www.vaproshield.com/#sle.
         4) York Manufacturing, Inc; York 304: www.yorkmfg.com/#sle.
         5) Substitutions: See Section 016000 - Product Requirements.

2.06 ACCESSORIES

A. Weeps:
   1. Type: Extruded propylene with honeycomb design.
   2. Color(s): As selected by Architect from manufacturer's full range.

B. Cavity Vents:
   1. Type: Polyester mesh.

C. Cavity Mortar Control: Semi-rigid polyethylene or polyester mesh panels, sized to thickness of wall cavity, and designed to prevent mortar droppings from clogging weeps and cavity vents and allow proper cavity drainage.
   1. Mortar Diverter: Panels installed at flashing locations.
      a. Manufacturers:
         1) 3GEN Masonry Products; Wall Defender: www.3genmp.com/#sle.
         2) Advanced Building Products, Inc: www.advancedbuildingproducts.com/#sle.
         3) CavClear, a Division of Archovations Inc: www.cavclear.com/#sle.

D. Cleaning Solution: Non-acidic, not harmful to masonry work or adjacent materials.

2.07 MORTAR AND GROUT MIXING

A. Mortar for Unit Masonry: ASTM C270, Proportion Specification.

B. Colored Mortar: Proportion selected pigments and other ingredients to match Architect's sample, without exceeding manufacturer's recommended pigment-to-cement ratio.

C. Grout: ASTM C476; consistency as required to fill volumes completely for grouting; fine grout for spaces with smallest horizontal dimension of 2 inches (50 mm) or less; coarse grout for spaces with smallest horizontal dimension greater than 2 inches (50 mm).

PART 3 EXECUTION

3.01 EXAMINATION

A. Verify that field conditions are acceptable and are ready to receive masonry.

B. Verify that related items provided under other sections are properly sized and located.

C. Verify that built-in items are in proper location, and ready for roughing into masonry work.

3.02 COURSING

A. Establish lines, levels, and coursing indicated. Protect from displacement.

B. Maintain masonry courses to uniform dimension. Form vertical and horizontal joints of uniform thickness.

C. Brick Units:
   1. Bond: Running.
   2. Mortar Joints: Concave.

3.03 PLACING AND BONDING

A. Lay solid masonry units in full bed of mortar, with full head joints, uniformly jointed with other work.

B. Lay hollow masonry units with face shell bedding on head and bed joints.

C. Remove excess mortar as work progresses.

D. Interlock intersections and external corners.

E. Do not shift or tap masonry units after mortar has achieved initial set. Where adjustment must be made, remove mortar and replace.

F. Perform job site cutting of masonry units with proper tools to provide straight, clean, unchipped edges. Prevent broken masonry unit corners or edges.

3.04 WEEPS/CAVITY VENTS

A. Install weeps in veneer walls at 24 inches (600 mm) on center horizontally on top of through-wall flashing above shelf angles and lintels and at bottom of walls.

B. Install cavity vents in veneer walls at 32 inches (800 mm) on center horizontally below shelf angles and lintels and at top of walls.

3.05 CAVITY MORTAR CONTROL

A. Do not permit mortar to drop or accumulate into cavity air space or to plug weep/cavity vents.

B. For cavity walls, build inner wythe ahead of outer wythe to accommodate accessories.

C. Install cavity mortar diverter at base of cavity and at other flashing locations as recommended by manufacturer to prevent mortar droppings from blocking weep/cavity vents.

3.06 REINFORCEMENT AND ANCHORAGE - MASONRY VENEER

A. Install horizontal joint reinforcement 16 inches (400 mm) on center.

B. Place masonry joint reinforcement in first and second horizontal joints above and below openings. Extend minimum 16 inches (400 mm) each side of opening.

C. Place continuous joint reinforcement in first and second joint below top of walls.

D. Seismic Reinforcement: Connect veneer anchors with continuous horizontal wire reinforcement before embedding anchors in mortar.

3.07 MASONRY FLASHINGS

A. Whether or not specifically indicated, install masonry flashing to divert water to exterior at all locations where downward flow of water will be interrupted.
   1. Extend flashings full width at such interruptions and at least 6 inches (152 mm), minimum, into adjacent masonry or turn up at least 1 inch (25.4 mm), minimum, to form watertight pan at non-masonry construction.
   2. Seal lapped ends and penetrations of flashing before covering with mortar.

B. Install flashing in accordance with manufacturer's instructions and BIA Technical Notes No. 7.

C. Extend metal flashings through exterior face of masonry and terminate in an angled drip with hemmed edge. Install joint sealer below drip edge to prevent moisture migration under flashing.

D. Lap end joints of flashings at least 6 inches (152 mm), minimum, and seal watertight with flashing sealant/adhesive.

3.08 LINTELS

3.09 CONTROL AND EXPANSION JOINTS

A. Do not continue horizontal joint reinforcement through control or expansion joints.

3.10 TOLERANCES

A. Install masonry within the site tolerances found in TMS 402/602.

B. Maximum Variation From Unit to Adjacent Unit: 1/16 inch (1.6 mm).

C. Maximum Variation from Plane of Wall: 1/4 inch in 10 ft (6 mm in 3 m) and 1/2 inch in 20 ft (13 mm in 6 m) or more.

D. Maximum Variation from Plumb: 1/4 inch (6 mm) per story non-cumulative; 1/2 inch (13 mm) in two stories or more.

E. Maximum Variation from Level Coursing: 1/8 inch in 3 ft (3 mm in 1 m) and 1/4 inch in 10 ft (6 mm in 3 m); 1/2 inch in 30 ft (13 mm in 9 m).

3.11 CUTTING AND FITTING

A. Cut and fit for pipes and conduit. Coordinate with other sections of work to provide correct size, shape, and location.

3.12 CLEANING

A. Replace defective mortar. Match adjacent work.

B. Clean soiled surfaces with cleaning solution.

C. Use non-metallic tools in cleaning operations.

3.13 PROTECTION

A. Without damaging completed work, provide protective boards at exposed external corners that are subject to damage by construction activities.

END OF SECTION 042613

SECTION 051200
STRUCTURAL STEEL FRAMING

PART 1 GENERAL

1.01 SECTION INCLUDES

A. Structural steel framing members.

B. Structural steel support members and struts.

C. Base plates, shear stud connectors and _____.

D. Grouting under base plates.

1.02 RELATED REQUIREMENTS

A. Section 051213 - Architecturally-Exposed Structural Steel Framing: Additional requirements for structural steel members designated as architecturally-exposed structural steel (AESS).

B. Section 052100 - Steel Joist Framing.

C. Section 053100 - Steel Decking: Support framing for small openings in deck.

D. Section 055000 - Metal Fabrications: Steel fabrications affecting structural steel work.

1.03 REFERENCE STANDARDS

A. AISC (MAN) - Steel Construction Manual; 2023.

B. AISC 303 - Code of Standard Practice for Steel Buildings and Bridges; 2022.

C. AISC 325 - Steel Construction Manual; 2017.

D. ASTM A53/A53M - Standard Specification for Pipe, Steel, Black and Hot-Dipped, Zinc-Coated, Welded and Seamless; 2022.

E. ASTM A307 - Standard Specification for Carbon Steel Bolts, Studs, and Threaded Rod 60 000 PSI Tensile Strength; 2021.

F. ASTM A500/A500M - Standard Specification for Cold-Formed Welded and Seamless Carbon Steel Structural Tubing in Rounds and Shapes; 2023.

G. ASTM A992/A992M - Standard Specification for Structural Steel Shapes; 2022.

H. ASTM E94/E94M - Standard Guide for Radiographic Examination Using Industrial Radiographic Film; 2017.

I. ASTM E164 - Standard Practice for Contact Ultrasonic Testing of Weldments; 2019.

J. ASTM E165/E165M - Standard Practice for Liquid Penetrant Testing for General Industry; 2023.

K. ASTM E709 - Standard Guide for Magnetic Particle Testing; 2021.

L. AWS A2.4 - Standard Symbols for Welding, Brazing, and Nondestructive Examination; 2020.

M. AWS B2.1/B2.1M - Specification for Welding Procedure and Performance Qualification; 2021.

N. AWS D1.1/D1.1M - Structural Welding Code - Steel; 2020, with Errata (2023).

O. IAS AC172 - Accreditation Criteria for Fabricator Inspection Programs for Structural Steel AC172; 2019.

P. RCSC (HSBOLT) - Specification for Structural Joints Using High-Strength Bolts; Research Council on Structural Connections; 2020.

Q. SSPC-SP 1 - Solvent Cleaning; 2015, with Editorial Revision (2016).

1.04 SUBMITTALS

A. See Section 013000 - Administrative Requirements, for submittal procedures.

B. Shop Drawings:

1. Indicate profiles, sizes, spacing, locations of structural members, openings, attachments, and fasteners.
2. Connections.
3. Indicate cambers.
4. Indicate welded connections with AWS A2.4 welding symbols. Indicate net weld lengths.

C. Manufacturer's Mill Certificate: Certify that products meet or exceed specified requirements.

D. Mill Test Reports: Indicate structural strength, destructive test analysis and non-destructive test analysis.

E. Welders' Qualification Statement: Welders' certificates in accordance with AWS B2.1/B2.1M and dated no more than 12 months before start of scheduled welding work.

F. Fabricator's Qualification Statement.

1.05 QUALITY ASSURANCE

A. Fabricate structural steel members in accordance with AISC (MAN) "Steel Construction Manual."

B. Welder Qualifications: Welding processes and welding operators qualified in accordance with AWS D1.1/D1.1M and no more than 12 months before start of scheduled welding work.

C. Fabricator Qualifications: A qualified steel fabricator that is accredited by the International Accreditation Service (IAS) Fabricator Inspection Program for Structural Steel in accordance with IAS AC172.

PART 2 PRODUCTS

2.01 MATERIALS - SEE GENERAL STRUCTURAL NOTES

2.02 FABRICATION

A. Shop fabricate to greatest extent possible.

B. Continuously seal joined members by continuous welds. Grind exposed welds smooth.

C. Fabricate connections for bolt, nut, and washer connectors.

D. Develop required camber for members.

2.03 FINISH

A. Prepare structural component surfaces in accordance with SSPC-SP 1.

2.04 SOURCE QUALITY CONTROL

A. High-Strength Bolts: Provide testing and verification of shop-bolted connections in accordance with RCSC (HSBOLT) "Specification for Structural Joints Using High-Strength Bolts" .

B. Welded Connections: Visually inspect all shop-welded connections using one of the following:
1. Radiographic testing performed in accordance with ASTM E94/E94M.
2. Ultrasonic testing performed in accordance with ASTM E164.
3. Liquid penetrant inspection performed in accordance with ASTM E165/E165M.
4. Magnetic particle inspection performed in accordance with ASTM E709.

PART 3 EXECUTION

3.01 EXAMINATION

A. Verify that conditions are appropriate for erection of structural steel and that the work may properly proceed.

3.02 ERECTION

A. Erect structural steel in compliance with AISC 303.

B. Allow for erection loads and provide sufficient temporary bracing to maintain structure in safe condition, plumb, and in true alignment until completion of erection and installation of permanent bracing.

C. Field weld components and shear studs indicated on shop drawings.

D. Do not field cut or alter structural members without approval of Architect.

3.03 FIELD QUALITY CONTROL

A. An independent testing agency will perform field quality control tests, as specified in Section 014000 - Quality Requirements.

B. High-Strength Bolts: Provide testing and verification of field-bolted connections in accordance with RCSC (HSBOLT) "Specification for Structural Joints Using High-Strength Bolts".

C. Welded Connections: Visually inspect all field-welded connections using one of the following:
   1. Radiographic testing performed in accordance with ASTM E94/E94M.
   2. Ultrasonic testing performed in accordance with ASTM E164.
   3. Liquid penetrant inspection performed in accordance with ASTM E165/E165M.
   4. Magnetic particle inspection performed in accordance with ASTM E709.

END OF SECTION 051200

This page intentionally left blank

SECTION 052100
STEEL JOIST FRAMING

PART 1 GENERAL

1.01 SECTION INCLUDES

A. Open web steel joists and shear stud connectors, with bridging, attached seats and anchors.

B. Loose bearing members, such as plates or angles, and anchor bolts for site placement.

C. Supplementary framing for roof openings greater than 18 inches (450 mm).

1.02 RELATED REQUIREMENTS

A. Section 051200 - Structural Steel Framing: Grouting base plates and bearing plates. Superstructure framing.

B. Section 051200 - Structural Steel Framing: Superstructure framing.

C. Section 053100 - Steel Decking: Bearing plates and angles.

D. Section 053100 - Steel Decking: Support framing for openings less than 18 inches (450 mm) in decking.

E. Section 055000 - Metal Fabrications: Non-framing steel fabrications attached to joists.

1.03 REFERENCE STANDARDS

A. ASTM A36/A36M - Standard Specification for Carbon Structural Steel; 2019.

B. ASTM A108 - Standard Specification for Steel Bar, Carbon and Alloy, Cold-Finished; 2018.

C. ASTM A123/A123M - Standard Specification for Zinc (Hot-Dip Galvanized) Coatings on Iron and Steel Products; 2017.

D. ASTM A153/A153M - Standard Specification for Zinc Coating (Hot-Dip) on Iron and Steel Hardware; 2023.

E. ASTM A307 - Standard Specification for Carbon Steel Bolts, Studs, and Threaded Rod 60 000 PSI Tensile Strength; 2021.

F. ASTM A563/A563M - Standard Specification for Carbon and Alloy Steel Nuts (Inch and Metric); 2021a.

G. ASTM E94/E94M - Standard Guide for Radiographic Examination Using Industrial Radiographic Film; 2017.

H. ASTM E164 - Standard Practice for Contact Ultrasonic Testing of Weldments; 2019.

I. ASTM E165/E165M - Standard Practice for Liquid Penetrant Testing for General Industry; 2023.

J. ASTM E709 - Standard Guide for Magnetic Particle Testing; 2021.

K. ASTM F436/F436M - Standard Specification for Hardened Steel Washers Inch and Metric Dimensions; 2019.

L. ASTM F3125/F3125M - Standard Specification for High Strength Structural Bolts and Assemblies, Steel and Alloy Steel, Heat Treated, Inch Dimensions 120 ksi and 150 ksi Minimum Tensile Strength, and Metric Dimensions 830 MPa and 1040 MPa Minimum Tensile Strength; 2023.

M. AWS B2.1/B2.1M - Specification for Welding Procedure and Performance Qualification; 2021.

N. AWS D1.1/D1.1M - Structural Welding Code - Steel; 2020, with Errata (2023).

O. IAS AC172 - Accreditation Criteria for Fabricator Inspection Programs for Structural Steel AC172; 2019.

P. RCSC (HSBOLT) - Specification for Structural Joints Using High-Strength Bolts; Research Council on Structural Connections; 2020.

Q. SJI 100 - Standard Specifications for K-Series, LH-Series, and DLH-Series Open Web Steel Joists, and for Joist Girders; 2020.

R. SJI Technical Digest No. 9 - Handling and Erection of Steel Joists and Joist Girders; 2008.

S. SSPC-Paint 15 - Steel Joist Shop Primer/Metal Building Primer; 2004.

T. SSPC-Paint 20 - Zinc-Rich Coating (Type I - Inorganic, and Type II - Organic); 2019.

U. SSPC-SP 2 - Hand Tool Cleaning; 2018.

1.04 SUBMITTALS

A. See Section 013000 - Administrative Requirements, for submittal procedures.

B. Shop Drawings: Indicate standard designations, joist coding, configurations, sizes, spacings, cambers, locations of joists, joist leg extensions, bridging, connections, and attachments.

C. Welders' Qualification Statement: Welders' certificates in accordance with AWS B2.1/B2.1M and dated no more than 12 months before start of scheduled welding work.

D. Manufacturer's Qualification Statement.

E. Fabricator's Qualification Statement.

1.05 QUALITY ASSURANCE

A. Design connections not detailed on drawings under direct supervision of a Professional Structural Engineer experienced in design of this work and licensed in the State in which the Project is located.

B. Welder Qualifications: Welding processes and welding operators qualified in accordance with AWS D1.1/D1.1M and dated no more than 12 months before start of scheduled welding work.

C. Fabricator Qualifications: A qualified steel fabricator that is accredited by the International Accreditation Service (IAS) Fabricator Inspection Program for Structural Steel in accordance with IAS AC172.

1.06 DELIVERY, STORAGE, AND HANDLING

A. Transport, handle, store, and protect products to SJI requirements.

PART 2 PRODUCTS

2.01 MATERIALS

A. Open Web Joists: SJI Type K Joists:
   1. Minimum End Bearing on Steel Supports: Comply with referenced SJI standard.
   2. Minimum End Bearing on Concrete or Masonry Supports: Comply with referenced SJI standard.

B. Open Web Joists: SJI 100 Type LH Joists:
   1. Minimum End Bearing on Steel Supports: Comply with referenced SJI standards.
   2. Minimum End Bearing on Masonry or Concrete Supports: Comply with referenced SJI standards.

C. Anchor Bolts, Nuts and Washers: ASTM A307 hot-dip galvanized per ASTM A153/A153M Class C.

D. High-Strength Structural Bolts, Nuts, and Washers: ASTM F3125/F3125M, Type 1, with matching compatible ASTM A563/A563M nuts and ASTM F436/F436M washers.

E. Shear Stud Connectors: Made from ASTM A108 Grade 1015 bars.

F. Structural Steel For Supplementary Framing and Joist Leg Extensions: ASTM A36/A36M.

G. Welding Materials: AWS D1.1/D1.1M; type required for materials being welded.

H. Shop and Touch-Up Primer: SSPC-Paint 15, complying with VOC limitations of authorities having jurisdiction.

I. Touch-Up Primer for Galvanized Surfaces: SSPC-Paint 20 Type I - Inorganic, complying with VOC limitations of authorities having jurisdiction.

2.02 FINISH

A. Galvanize joists as specified.
   1. Do not prime surfaces that will be fireproofed.
   2. Galvanize steel ledge angles.
   3. Leave other steel members unprimed.

B. Prepare surfaces to be finished in accordance with SSPC-SP 2.

C. Galvanizing: Provide minimum 1.7 oz/sq ft (530 g/sq m) galvanized coating to ASTM A123/A123M requirements.

2.03 SOURCE QUALITY CONTROL

A. Provide shop testing of steel components as follows:

B. High-Strength Bolts: Provide testing and verification of shop-bolted connections in accordance with RCSC (HSBOLT) "Specification for Structural Joints Using High-Strength Bolts".

C. Welded Connections: Visually inspect all shop-welded connections using one of the following:
   1. Radiographic testing performed in accordance with ASTM E94/E94M.
   2. Ultrasonic testing performed in accordance with ASTM E164.
   3. Liquid penetrant inspection performed in accordance with ASTM E165/E165M.
   4. Magnetic particle inspection performed in accordance with ASTM E709.

PART 3 EXECUTION

3.01 EXAMINATION

A. Verify existing conditions prior to beginning work.

3.02 ERECTION

A. Erect joists with correct bearing on supports.

B. Allow for erection loads. Provide sufficient temporary bracing to maintain framing safe, plumb, and in true alignment.

C. Coordinate the placement of anchors for securing loose bearing members furnished as part of the work of this section.

D. After joist alignment and installation of framing, field weld joist seats to steel bearing surfaces.

E. Install supplementary framing for floor and roof openings greater than 18 inches (450 mm).

F. Do not permit erection of decking until joists are braced, bridged, and secured or until completion of erection and installation of permanent bridging and bracing.

G. Do not field cut or alter structural members without approval of joist manufacturer.

3.03 FIELD QUALITY CONTROL

A. An independent testing agency will perform field quality control tests, as specified in Section 014000 - Quality Requirements.

B. High-Strength Bolts: Provide testing and verification of field-bolted connections in accordance with RCSC (HSBOLT) "Specification for Structural Joints Using High-Strength Bolts".

C. Welded Connections: Visually inspect all field-welded connections using one of the following:
   1. Radiographic testing performed in accordance with ASTM E94/E94M.
   2. Ultrasonic testing performed in accordance with ASTM E164.
   3. Liquid penetrant inspection performed in accordance with ASTM E165/E165M.
   4. Magnetic particle inspection performed in accordance with ASTM E709.

END OF SECTION 052100

This page intentionally left blank

SECTION 053100
STEEL DECKING

PART 1 GENERAL

1.01 SECTION INCLUDES

A. Roof deck.

B. Supplementary framing for openings up to and including 18 inches (450 mm).

C. Bearing plates and angles.

D. Stud shear connectors.

1.02 RELATED REQUIREMENTS

A. Section 042000 - Unit Masonry: Placement of anchors for bearing plates embedded in unit masonry assemblies.

B. Section 051200 - Structural Steel Framing: Support framing for openings larger than 18 inches (450 mm) and shear stud connectors.

C. Section 051200 - Structural Steel Framing: Placement of embedded steel anchors for bearing plates in cast-in-place concrete.

D. Section 052100 - Steel Joist Framing: Support framing for openings larger than 18 inches (450 mm) and shear stud connectors.

E. Section 052100 - Steel Joist Framing: Placement of embedded steel anchors for bearing plates and joist seats in cast-in-place concrete.

1.03 REFERENCE STANDARDS

A. ASTM A36/A36M - Standard Specification for Carbon Structural Steel; 2019.

B. ASTM A108 - Standard Specification for Steel Bar, Carbon and Alloy, Cold-Finished; 2018.

C. AWS B2.1/B2.1M - Specification for Welding Procedure and Performance Qualification; 2021.

D. AWS D1.1/D1.1M - Structural Welding Code - Steel; 2020, with Errata (2023).

E. AWS D1.3/D1.3M - Structural Welding Code - Sheet Steel; 2018, with Errata (2022).

F. ICC-ES AC43 - Acceptance Criteria for Steel Deck Roof and Floor Systems; 2022.

G. ICC-ES AC70 - Acceptance Criteria for Power-Actuated Fasteners Driven into Concrete, Steel and Masonry Elements; 2019, with Editorial Revision (2021).

H. SDI (DM) - Publication No.30, Design Manual for Composite Decks, Form Decks, and Roof Decks; 2007.

1.04 SUBMITTALS

A. See Section 013000 - Administrative Requirements, for submittals procedures.

B. Product Data: Provide deck profile characteristics, dimensions, structural properties, and finishes.

C. Shop Drawings: Indicate deck plan, support locations, projections, openings, reinforcement, pertinent details, and accessories.

D. Welders' Qualification Statement: Welders' certificates in accordance with AWS B2.1/B2.1M and dated no more than 12 months before start of scheduled welding work.

1.05 QUALITY ASSURANCE

A. Welder Qualifications: Welding processes and welding operators qualified in accordance with AWS D1.1/D1.1M and AWS D1.3/D1.3M and dated no more than 12 months before start of scheduled welding work.

1.06 DELIVERY, STORAGE, AND HANDLING

A. Cut plastic wrap to encourage ventilation.

B. Separate sheets and store deck on dry wood sleepers; slope for positive drainage.

PART 2 PRODUCTS

2.01 STEEL DECK

A. Roof Deck: Non-composite type, fluted steel sheet per General Structural Notes

2.02 ACCESSORY MATERIALS

A. Bearing Plates and Angles: ASTM A36/A36M steel, galvanized per ASTM A123/A123M.

B. Stud Shear Connectors: Made from ASTM A108 Grade 1015 bars.

C. Welding Materials: AWS D1.1/D1.1M.

D. Fasteners: Galvanized hardened steel, self tapping.

E. Mechanical Fasteners: Steel; hex washer head, self-drilling, self-tapping.

F. Weld Washers: Mild steel, uncoated, 3/4 inch (19 mm) outside diameter, 1/8 inch (3 mm) thick.

PART 3 EXECUTION

3.01 EXAMINATION

A. Verify existing conditions prior to beginning work.

3.02 INSTALLATION

A. Erect metal deck in accordance with SDI Design Manual and manufacturer's instructions. Align and level. Provide minimum bearing per General Structural Notes

B. Fasten deck to steel support members at ends and intermediate supports as indicated, parallel with the deck flute and at each transverse flute using methods specified.
   1. Welding: Use fusion welds through weld washers.
   2. Place and secure special deep fluted sections for integral concrete bridging.

C. Drive mechanical sidelap connectors completely through adjacent lapped sheets; positively engage adjacent sheets with minimum three-thread penetration.

D. Weld deck in accordance with AWS D1.3/D1.3M.

E. Weld stud shear connectors through steel deck to structural members below.

F. Immediately after welding deck and other metal components in position, coat welds, burned areas, and damaged surface coating, with touch-up primer.

END OF SECTION 053100

SECTION 054000
COLD-FORMED METAL FRAMING

PART 1 GENERAL

1.01 SECTION INCLUDES

A. Formed steel stud exterior wall and interior wall framing.

B. Exterior wall sheathing.

C. Water-resistive barrier over sheathing.

1.02 RELATED REQUIREMENTS

A. Section 042613 - Masonry Veneer: Veneer masonry supported by wall stud metal framing.

B. Section 053100 - Steel Decking.

C. Section 061000 - Rough Carpentry: Wood blocking and miscellaneous framing.

D. Section 092116 - Gypsum Board Assemblies: Gypsum-based sheathing.

1.03 REFERENCE STANDARDS

A. AISI S100 - North American Specification for the Design of Cold-Formed Steel Structural Members; 2016, with Supplement (2020).

B. AISI S201 - North American Standard for Cold-Formed Steel Framing - Product Data; 2017.

C. AISI S240 - North American Standard for Cold-Formed Steel Structural Framing; 2015, with Errata (2020).

D. ASTM A153/A153M - Standard Specification for Zinc Coating (Hot-Dip) on Iron and Steel Hardware; 2023.

E. ASTM A780/A780M - Standard Practice for Repair of Damaged and Uncoated Areas of Hot-Dip Galvanized Coatings; 2020.

F. ASTM A1003/A1003M - Standard Specification for Steel Sheet, Carbon, Metallic- and Nonmetallic-Coated for Cold-Formed Framing Members; 2015.

G. ASTM C1007 - Standard Specification for Installation of Load Bearing (Transverse and Axial) Steel Studs and Related Accessories; 2020.

H. AWS D1.3/D1.3M - Structural Welding Code - Sheet Steel; 2018, with Errata (2022).

I. ICC-ES AC38 - Acceptance Criteria for Water-Resistive Barriers; 2016, with Editorial Revision (2021).

1.04 ADMINISTRATIVE REQUIREMENTS

A. Coordinate with work of other sections that is to be installed in or adjacent to metal framing systems, including but not limited to structural anchors, cladding anchors, utilities, insulation, and firestopping.

1.05 SUBMITTALS

A. See Section 013000 - Administrative Requirements for submittal procedures.

B. Product Data: Provide data on cold-formed steel structural members; include material descriptions and base steel thickness.

C. Product Data: Provide manufacturer's data on factory-made connectors and mechanical fasteners, showing compliance with requirements.

D. Product Data: For lateral-force resisting systems, provide product data sheets on hold-down, showing compliance with requirements.

E. Shop Drawings: Indicate component details, framed openings, bearing, anchorage, loading, welds, and type and location of fasteners, and accessories or items required of related work.

F. Inspection Reports: Provide material verification Inspection Reports in accordance with requirements of AISI S240.

G. Inspection Reports: Provide Inspection Reports for welding, mechanical fastening, and cold-formed steel light-frame construction in accordance with requirements of AISI S240.

H. Manufacturer's Installation Instructions: Provide installation instructions for connectors.

1.06 QUALITY ASSURANCE

A. See Section 014000 - Quality Requirements for additional requirements.

B. Welder Qualifications: Welding processes and welding operators qualified in accordance with AWS D1.1/D1.1M and AWS D1.3/D1.3M and dated no more than 12 months before start of scheduled welding work.

PART 2 PRODUCTS

2.01 PERFORMANCE REQUIREMENTS

A. Comply with requirements for Contractor's design-related professional design services indicated in Section 014000 - Quality Requirements.

B. Design Criteria: In accordance with applicable codes.
   1. Live load deflection meeting the following, unless otherwise indicated:
      a. Floors: Maximum vertical deflection under live load of 1/480 of span.
      b. Exterior Walls: Maximum horizontal deflection under wind load of 1/180 of span.
      c. Design nonaxial loadbearing framing to accommodate not less than 1/2 in (13 mm) vertical deflection.

2.02 MATERIALS

A. Material and Product Requirements Criteria: AISI S201.

B. Steel Sheet: ASTM A1003/A1003M, subject to the ductility limitations indicated in AISI S240.
   1. Structural Grade: As required to meet design criteria.

2.03 STRUCTURAL FRAMING COMPONENTS

A. Wall Studs and Track Sections: AISI S240; c-shaped studs and u-shaped track sections in stud-matching nominal width and compatible height.
   1. Thickness and Depth: As indicated on drawings.

B. Jamb Studs: AISI S240; manufactured, engineered, c-shaped with wide flanges, designed to replace conventional double-stud framing at openings.
   1. Thickness and Depth: As indicated on drawings.

C. Headers: AISI S240; manufactured, engineered one-member or two-member assemblies, with wide flanges, designed to replace conventional box or nested header framing at openings.
   1. Thickness and Depth: As indicated on drawings.
   2. Jamb Mounting Clips: Manufacturer's standard.

2.04 LATERAL FORCE-RESISTING SYSTEMS

A. Steel Sheet: ASTM A1003/A1003M, subject to the ductility limitations indicated in AISI S240.

2.05 CONNECTIONS

A. Performance Requirements: Provide connections in compliance with requirements of AISI S240.

B. Steel Sheet: ASTM A1003/A1003M, subject to the ductility limitations indicated in AISI S240.

C. Structural Performance: Maintain load and movement capacity required by applicable building code and specified design criteria.

D. Movement Connections: Provide mechanical anchorage devices that accommodate movement using slotted holes, shouldered screws or screws and anti-friction or stepped bushings, while maintaining structural performance of framing. Provide movement connections where indicated on drawings.

2.06 MISCELLANEOUS CONNECTIONS

A. Self-Drilling, Self-Tapping Screws, Bolts, Nuts and Washers: Hot-dip galvanized per ASTM A153/A153M.

2.07 SHEATHING

A. Gypsum Board Wall Sheathing: See Section 092116.

2.08 ACCESSORIES

A. Bracing, Furring, Bridging: Formed sheet steel, thickness determined for conditions encountered; finish to match framing components.

B. Galvanizing Repair: Touch up bare steel with zinc-rich paint in compliance with ASTM A780/A780M.

C. Water-Resistive Barrier: ICC-ES AC38 Grade D and 60-minute plastic sheet.

PART 3 EXECUTION

3.01 EXAMINATION

A. Verify that substrate surfaces are ready to receive work.

3.02 PREPARATION

A. Structural Wall Foundations: For gaps between wall bottom track and top of foundation 1/4 inch (6.4 mm) or greater, level substrate with loadbearing shims or grout between track and foundation.

3.03 INSTALLATION - GENERAL

A. Install structural members and connections in compliance with ASTM C1007.

3.04 INSTALLATION OF STUDS

A. Install wall studs plumb and level.

B. Construct corners using minimum of three studs. Install double studs at wall openings, door and window jambs.

C. Install load-bearing studs full length in one piece. Splicing of studs is not permitted.

D. Install load-bearing studs; brace, and reinforce to develop full strength and achieve design requirements.

E. Install framing between studs for attachment of mechanical and electrical items, and to prevent stud rotation.

F. Touch-up field welds and damaged corrosion-protected surfaces zinc-rich paint in compliance with ASTM A780/A780M.

3.05 INSTALLATION OF WALL SHEATHING

A. Install wall sheathing with long dimension perpendicular to wall studs, with ends over firm bearing and staggered, using self-tapping screws.
   1. Provide steel diagonal bracing at corners with foam insulation or gypsum board wall sheathing.
   2. Place water-resistive barrier horizontally over wall sheathing, weather lapping edges, and ends.

3.06 FIELD QUALITY CONTROL

A. See Section 014000 - Quality Requirements, for additional requirements.

3.07 TOLERANCES

A. Studs - Vertical Alignment (Plumbness): 1/960 of span or 1/8 inch in 10 ft (3.2 mm in 3000 mm), in accordance with ASTM C1007.

END OF SECTION 054000

This page intentionally left blank

SECTION 055000
METAL FABRICATIONS

PART 1 GENERAL

1.01 SECTION INCLUDES

A. Shop fabricated steel items.

B. Steel Base Board

C. Hot Rolled Steel Corner Guards

1.02 RELATED REQUIREMENTS

A. Section 042000 - Unit Masonry: Placement of metal fabrications in masonry.

1.03 REFERENCE STANDARDS

A. ASTM A36/A36M - Standard Specification for Carbon Structural Steel; 2019.

B. ASTM A53/A53M - Standard Specification for Pipe, Steel, Black and Hot-Dipped, Zinc-Coated, Welded and Seamless; 2022.

C. ASTM A283/A283M - Standard Specification for Low and Intermediate Tensile Strength Carbon Steel Plates; 2018.

D. IAS AC172 - Accreditation Criteria for Fabricator Inspection Programs for Structural Steel AC172; 2019.

E. SSPC-Paint 15 - Steel Joist Shop Primer/Metal Building Primer; 2004.

F. SSPC-SP 2 - Hand Tool Cleaning; 2018.

1.04 SUBMITTALS

A. See Section 013000 - Administrative Requirements, for submittal procedures.

B. Shop Drawings: Indicate profiles, sizes, connection attachments, reinforcing, anchorage, size and type of fasteners, and accessories. Include erection drawings, elevations, and details where applicable.

1.05 QUALITY ASSURANCE

A. Fabricator Qualifications: A qualified steel fabricator that is accredited by IAS AC172.

PART 2 PRODUCTS

2.01 MATERIALS - STEEL

A. Steel Sections: ASTM A36/A36M.

B. Plates: ASTM A283/A283M.

C. Pipe: ASTM A53/A53M, Grade B Schedule 40, hot-dip galvanized finish.

D. Shop and Touch-Up Primer: SSPC-Paint 15, complying with VOC limitations of authorities having jurisdiction.

2.02 FABRICATION

A. Fit and shop assemble items in largest practical sections, for delivery to site.

B. Fabricate items with joints tightly fitted and secured.

C. Continuously seal joined members by intermittent welds and plastic filler.

D. Grind exposed joints flush and smooth with adjacent finish surface. Make exposed joints butt tight, flush, and hairline. Ease exposed edges to small uniform radius.

E. Furnish components required for anchorage of fabrications. Fabricate anchors and related components of same material and finish as fabrication, except where specifically noted otherwise.

2.03 FABRICATED ITEMS

A. Bollards: Steel pipe, concrete filled, crowned cap, as detailed; prime paint finish.

B. Lintels: As detailed; prime paint finish.

C. Door Frames for Overhead Door Openings: Channel sections; prime paint finish.

D. Corner Guards

E. Countertops

2.04 FINISHES - STEEL

A. Prepare surfaces to be primed in accordance with SSPC-SP2.

B. Clean surfaces of rust, scale, grease, and foreign matter prior to finishing.

C. Prime Painting: One coat.

D. Powder Coating: Clear high gloss

2.05 FABRICATION TOLERANCES

A. Squareness: 1/8 inch (3 mm) maximum difference in diagonal measurements.

B. Maximum Offset Between Faces: 1/16 inch (1.5 mm).

C. Maximum Misalignment of Adjacent Members: 1/16 inch (1.5 mm).

D. Maximum Bow: 1/8 inch (3 mm) in 48 inches (1.2 m).

E. Maximum Deviation From Plane: 1/16 inch (1.5 mm) in 48 inches (1.2 m).

PART 3 EXECUTION

3.01 EXAMINATION

A. Verify that field conditions are acceptable and are ready to receive work.

3.02 PREPARATION

A. Clean and strip primed steel items to bare metal where site welding is required.

3.03 INSTALLATION

A. Install items plumb and level, accurately fitted, free from distortion or defects.

B. Provide for erection loads, and for sufficient temporary bracing to maintain true alignment until completion of erection and installation of permanent attachments.

C. Obtain approval prior to site cutting or making adjustments not scheduled.

3.04 TOLERANCES

A. Maximum Variation From Plumb: 1/4 inch (6 mm) per story, non-cumulative.

B. Maximum Offset From True Alignment: 1/4 inch (6 mm).

C. Maximum Out-of-Position: 1/4 inch (6 mm).

END OF SECTION 055000

SECTION 055133
METAL LADDERS

PART 1 GENERAL

1.01 SECTION INCLUDES

A. Prefabricated ship ladders.

1.02 REFERENCE STANDARDS

A. AAMA 2604 - Voluntary Specification, Performance Requirements and Test Procedures for High Performance Organic Coatings on Aluminum Extrusions and Panels (with Coil Coating Appendix); 2022.

B. ANSI A14.3 - American National Standard for Ladders -- Fixed -- Safety Requirements; 2008 (Reaffirmed 2018).

C. ASTM A36/A36M - Standard Specification for Carbon Structural Steel; 2019.

D. ASTM A53/A53M - Standard Specification for Pipe, Steel, Black and Hot-Dipped, Zinc-Coated, Welded and Seamless; 2022.

E. ASTM A283/A283M - Standard Specification for Low and Intermediate Tensile Strength Carbon Steel Plates; 2018.

F. ASTM A307 - Standard Specification for Carbon Steel Bolts, Studs, and Threaded Rod 60 000 PSI Tensile Strength; 2021.

G. ASTM A500/A500M - Standard Specification for Cold-Formed Welded and Seamless Carbon Steel Structural Tubing in Rounds and Shapes; 2023.

H. ASTM B211/B211M - Standard Specification for Aluminum and Aluminum-Alloy Rolled or Cold Finished Bar, Rod, and Wire; 2019.

I. ASTM F3125/F3125M - Standard Specification for High Strength Structural Bolts and Assemblies, Steel and Alloy Steel, Heat Treated, Inch Dimensions 120 ksi and 150 ksi Minimum Tensile Strength, and Metric Dimensions 830 MPa and 1040 MPa Minimum Tensile Strength; 2023.

J. AWS D1.1/D1.1M - Structural Welding Code - Steel; 2020, with Errata (2023).

K. SSPC-Paint 15 - Steel Joist Shop Primer/Metal Building Primer; 2004.

PART 2 PRODUCTS

2.01 MATERIALS - STEEL

A. Steel Sections: ASTM A36/A36M.

B. Steel Tubing: ASTM A500/A500M Grade B cold-formed structural tubing.

C. Plates: ASTM A283/A283M.

D. Pipe: ASTM A53/A53M, Grade B Schedule 40, black finish.

E. Mechanical Fasteners: Same material or compatible with materials being fastened; type consistent with design and specified quality level.

F. Bolts, Nuts, and Washers: ASTM A307, plain.

G. Bolts, Nuts, and Washers: ASTM F3125/F3125M, Type 1, plain.

H. Welding Materials: AWS D1.1/D1.1M; type required for materials being welded.

I. Shop and Touch-Up Primer: SSPC-Paint 15, complying with VOC limitations of authorities having jurisdiction.

2.02 MATERIALS - ALUMINUM

A. Extruded Aluminum: ASTM B211/B211M, 6063 alloy, T6 temper.

2.03 FABRICATION

A. Fit and shop assemble items in largest practical sections, for delivery to site.

B. Fabricate items with joints tightly fitted and secured.

C. Grind exposed joints flush and smooth with adjacent finish surface. Make exposed joints butt tight, flush, and hairline. Ease exposed edges to small uniform radius.

D. Supply components required for anchorage of fabrications. Fabricate anchors and related components of same material and finish as fabrication, except where specifically noted otherwise.

2.04 PREFABRICATED LADDERS

A. Prefabricated Ladder: Welded metal unit complying with ANSI A14.3; factory fabricated to greatest degree practical and in the largest components possible.
   1. Components: Manufacturer's standard rails, rungs, treads, handrails. returns, platforms and safety devices complying with the requirements of the MATERIALS article of this section.
   2. Materials: Aluminum; ASTM B211/B211M 6063 alloy, T52 temper.
   3. Finish: Powder coat; color to be selected by Architect from manufacturer's standard range.
   4. Manufacturers:
      a. Industrial Ladder & Scaffolding, Inc.; _____: www.anyladder.com/#sle.
      b. O'Keeffe's Inc; Model 500: www.okeeffes.com/#sle.
      c. Precision Ladders, LLC; Fixed Alumnium Wall Ladder: www.precisionladders.com/#sle.
      d. Substitutions: See Section 016000 - Product Requirements.
   5. Location: Exterior roof access.

B. Prefabricated Ship Ladder: Welded metal unit complying with ANSI A14.3; factory fabricated to greatest degree practical and in the largest components possible.
   1. Components: Manufacturer's standard rails, rungs, treads, handrails. returns, platforms and safety devices complying with the requirements of the MATERIALS article of this section.
   2. Materials: Aluminum; ASTM B211/B211M 6063 alloy, T52 temper.
   3. Incline: 60 degrees.
   4. Finish: Powder coat; color to be selected by Architect from manufacturer's standard range.
   5. Manufacturers:
      a. O'Keeffe's Inc; Model 520: www.okeeffes.com/#sle.
      b. Precision Ladders, LLC; Alumnium Ship Stairs: www.precisionladders.com/#sle.
      c. SixAxis; ErectaStep - Ships Ladder: www.sixaxisllc.com/#sle.
      d. Substitutions: See Section 016000 - Product Requirements.

2.05 FINISHES - STEEL

A. Prime paint steel items.

B. Prime Painting: One coat.

2.06 FINISHES - ALUMINUM

A. Exterior Aluminum Surfaces: High performance organic coating.

B. High Performance Organic Coating System: AAMA 2604 multiple coat, thermally cured fluoropolymer system; color as indicated.

2.07 FABRICATION TOLERANCES

A. Squareness: 1/8 inch (3 mm) maximum difference in diagonal measurements.

B. Maximum Offset Between Faces: 1/16 inch (1.5 mm).

C. Maximum Misalignment of Adjacent Members: 1/16 inch (1.5 mm).

D. Maximum Bow: 1/8 inch (3 mm) in 48 inches (1.2 m).

E. Maximum Deviation From Plane: 1/16 inch (1.5 mm) in 48 inches (1.2 m).

PART 3 EXECUTION

3.01 EXAMINATION

A. Verify that field conditions are acceptable and are ready to receive work.

3.02 PREPARATION

3.03 INSTALLATION

A. Install items plumb and level, accurately fitted, free from distortion or defects.

B. Provide for erection loads, and for sufficient temporary bracing to maintain true alignment until completion of erection and installation of permanent attachments.

C. Obtain approval prior to site cutting or making adjustments not scheduled.

3.04 TOLERANCES

A. Maximum Variation From Plumb: 1/4 inch (6 mm) per story, non-cumulative.

B. Maximum Offset From True Alignment: 1/4 inch (6 mm).

C. Maximum Out-of-Position: 1/4 inch (6 mm).

END OF SECTION 055133

This page intentionally left blank

SECTION 055213
PIPE AND TUBE RAILINGS

PART 1 GENERAL

4.01 SECTION INCLUDES

A. Free-standing railings at steps and ramps.

4.02 RELATED REQUIREMENTS

A. Section 099113 - Exterior Painting: Paint finish.

4.03 REFERENCE STANDARDS

A. ASTM A53/A53M - Standard Specification for Pipe, Steel, Black and Hot-Dipped, Zinc-Coated, Welded and Seamless; 2022.

B. ASTM A123/A123M - Standard Specification for Zinc (Hot-Dip Galvanized) Coatings on Iron and Steel Products; 2017.

C. ASTM A500/A500M - Standard Specification for Cold-Formed Welded and Seamless Carbon Steel Structural Tubing in Rounds and Shapes; 2023.

D. ASTM A780/A780M - Standard Practice for Repair of Damaged and Uncoated Areas of Hot-Dip Galvanized Coatings; 2020.

E. ASTM E935 - Standard Test Methods for Performance of Permanent Metal Railing Systems and Rails for Buildings; 2021.

F. ASTM E985 - Standard Specification for Permanent Metal Railing Systems and Rails for Buildings; 2024.

G. AWS D1.1/D1.1M - Structural Welding Code - Steel; 2020, with Errata (2023).

H. SSPC-Paint 15 - Steel Joist Shop Primer/Metal Building Primer; 2004.

I. SSPC-Paint 20 - Zinc-Rich Coating (Type I - Inorganic, and Type II - Organic); 2019.

4.04 SUBMITTALS

A. See Section 013000 - Administrative Requirements, for submittal procedures.

B. Shop Drawings: Indicate profiles, sizes, connection attachments, anchorage, size and type of fasteners, and accessories.

4.05 QUALITY ASSURANCE

A. Structural Designer Qualifications: Professional Structural Engineer experienced in design of this work and licensed in the State in which the Project is located, or personnel under direct supervision of such an engineer.

PART 2 PRODUCTS

5.01 RAILINGS - GENERAL REQUIREMENTS

A. Design, fabricate, and test railing assemblies in accordance with the most stringent requirements of applicable local code.

B. Comply with ASTM E985.

C. Distributed Loads: Design railing assembly, wall rails, and attachments to resist distributed force of 75 pounds per linear foot (1095 N/m) applied to the top of the assembly and in any direction, without damage or permanent set. Test in accordance with ASTM E935

D. Allow for expansion and contraction of members and building movement without damage to connections or members.

E. Dimensions: See drawings for configurations and heights.
   1. Top Rails and Wall Rails: 1-1/2 inches (38 mm) diameter, round.
   2. Intermediate Rails: 1-1/2 inches (38 mm) diameter, round.
   3. Posts: 1-1/2 inches (38 mm) diameter, round.

F. Provide anchors and other components as required to attach to structure, made of same materials as railing components unless otherwise indicated; where exposed fasteners are unavoidable provide flush countersunk fasteners.

G. Provide welding fittings to join lengths, seal open ends, and conceal exposed mounting bolts and nuts, including but not limited to elbows, T-shapes, splice connectors, flanges, escutcheons, and wall brackets.

5.02 STEEL RAILING SYSTEM

A. Steel Tube: ASTM A500/A500M Grade B cold-formed structural tubing.

B. Steel Pipe: ASTM A53/A53M Grade B Schedule 80, black finish.

C. Non-Weld Mechanical Fittings: Slip-on, galvanized malleable iron castings, for Schedule 40 pipe, with flush setscrews for tightening by standard hex wrench, no bolts or screw fasteners.

D. Welding Fittings: Factory- or shop-welded from matching pipe or tube; seams continuously welded; joints and seams ground smooth.

E. Exposed Fasteners: No exposed bolts or screws.

F. Galvanizing: In accordance with requirements of ASTM A123/A123M.
   1. Touch-Up Primer for Galvanized Surfaces: SSPC-Paint 20 Type I - Inorganic.

G. Shop and Touch-Up Primer: SSPC-Paint 15, complying with VOC limitations of authorities having jurisdiction.

5.03 FABRICATION

A. Accurately form components to suit specific project conditions and for proper connection to building structure.

B. Fit and shop assemble components in largest practical sizes for delivery to site.

C. Fabricate components with joints tightly fitted and secured. Provide spigots and sleeves to accommodate site assembly and installation.

D. Welded Joints:
   1. Exterior Components: Continuously seal joined pieces by intermittent welds and plastic filler. Drill condensate drainage holes at bottom of members at locations that will not encourage water intrusion.
   2. Interior Components: Continuously seal joined pieces by intermittent welds and plastic filler.
   3. Grind exposed joints flush and smooth with adjacent finish surface. Make exposed joints butt tight, flush, and hairline. Ease exposed edges to small uniform radius.

E. Weld connections that cannot be shop welded due to size limitations.
   1. Weld in accordance with AWS D1.1/D1.1M.
   2. Match shop welding and bolting.
   3. Clean welds, bolted connections, and abraded areas.
   4. Touch up shop primer and factory-applied finishes.
   5. Repair galvanizing with galvanizing repair paint per ASTM A780/A780M.

PART 3 EXECUTION

6.01 EXAMINATION

A. Verify that field conditions are acceptable and are ready to receive work.

6.02 PREPARATION

A. Clean and strip primed steel items to bare metal where site welding is required.

B. Supply items required to be cast into concrete or embedded in masonry with setting templates, for installation as work of other sections.

6.03 INSTALLATION

A. Install in accordance with manufacturer's instructions.

B. Install components plumb and level, accurately fitted, free from distortion or defects, with tight joints.

C. Anchor railings securely to structure.

6.04 TOLERANCES

A. Maximum Variation From Plumb: 1/4 inch (6 mm) per floor level, non-cumulative.

B. Maximum Offset From True Alignment: 1/4 inch (6 mm).

C. Maximum Out-of-Position: 1/4 inch (6 mm).

END OF SECTION 055213

This page intentionally left blank

SECTION 061053
MISCELLANEOUS ROUGH CARPENTRY

PART 1 GENERAL

7.01 SECTION INCLUDES

A. Roofing nailers.

B. Preservative treated wood materials.

C. Communications and electrical room mounting boards.

D. Concealed wood blocking, nailers, and supports.

7.02 REFERENCE STANDARDS

A. ASTM E84 - Standard Test Method for Surface Burning Characteristics of Building Materials; 2023d.

B. AWPA U1 - Use Category System: User Specification for Treated Wood; 2024.

C. PS 1 - Structural Plywood; 2023.

D. PS 20 - American Softwood Lumber Standard; 2021.

PART 2 PRODUCTS

8.01 GENERAL REQUIREMENTS

A. Dimension Lumber: Comply with PS 20 and requirements of specified grading agencies.
   1. If no species is specified, provide species graded by the agency specified; if no grading agency is specified, provide lumber graded by grading agency meeting the specified requirements.

8.02 DIMENSION LUMBER FOR CONCEALED APPLICATIONS

A. Sizes: Nominal sizes as indicated on drawings, S4S.

B. Moisture Content: S-dry or MC19.

C. Miscellaneous Framing, Blocking, Nailers, Grounds, and Furring:
   1. Lumber: S4S, No.2 or Standard Grade.
   2. Boards: Standard or No.3.

8.03 CONSTRUCTION PANELS

A. Communications and Electrical Room Mounting Boards: PS 1, A-D plywood, or medium density fiberboard; 3/4 inch (19 mm) thick; flame spread index of 25 or less, smoke developed index of 450 or less, when tested in accordance with ASTM E84.

8.04 FACTORY WOOD TREATMENT

A. Treated Lumber and Plywood: Comply with requirements of AWPA U1 - Use Category System for wood treatments determined by use categories, expected service conditions, and specific applications.

PART 3 EXECUTION

9.01 PREPARATION

9.02 INSTALLATION - GENERAL

A. Select material sizes to minimize waste.

B. Reuse scrap to the greatest extent possible; clearly separate scrap for use on site as accessory components, including: shims, bracing, and blocking.

C. Where treated wood is used on interior, provide temporary ventilation during and immediately after installation sufficient to remove indoor air contaminants.

9.03 BLOCKING, NAILERS, AND SUPPORTS

A. Provide framing and blocking members as indicated or as required to support finishes, fixtures, specialty items, and trim.

B. In walls, provide blocking attached to studs as backing and support for wall-mounted items, unless item can be securely fastened to two or more studs or other method of support is explicitly indicated.

C. Where ceiling-mounting is indicated, provide blocking and supplementary supports above ceiling, unless other method of support is explicitly indicated.

D. Provide the following specific nonstructural framing and blocking:
   1. Cabinets and shelf supports.
   2. Wall brackets.
   3. Handrails.
   4. Grab bars.
   5. Towel and bath accessories.
   6. Wall-mounted door stops.
   7. Chalkboards and marker boards.

9.04 ROOF-RELATED CARPENTRY

A. Coordinate installation of roofing carpentry with deck construction, framing of roof openings, and roofing assembly installation.

9.05 INSTALLATION OF CONSTRUCTION PANELS

A. Communications and Electrical Room Mounting Boards: Secure with screws to studs with edges over firm bearing; space fasteners at maximum 24 inches (610 mm) on center on edges and into studs in field of board.
   1. At fire-rated walls, install board over wall board indicated as part of the fire-rated assembly.
   2. Where boards are indicated as full floor-to-ceiling height, install with long edge of board parallel to studs.
   3. Install adjacent boards without gaps.

9.06 CLEANING

A. Waste Disposal: See Section 017419 - Construction Waste Management and Disposal.
   1. Comply with applicable regulations.
   2. Do not burn scrap on project site.
   3. Do not burn scraps that have been pressure treated.
   4. Do not send materials treated with pentachlorophenol, CCA, or ACA to co-generation facilities or “waste-to-energy” facilities.

B. Do not leave wood, shavings, sawdust, etc. on the ground or buried in fill.

C. Prevent sawdust and wood shavings from entering the storm drainage system.

END OF SECTION 061053

SECTION 064100
ARCHITECTURAL WOOD CASEWORK

PART 1 GENERAL

1.01 SECTION INCLUDES

A. Specially fabricated cabinet units.

B. Countertops.

C. Hardware.

1.02 RELATED REQUIREMENTS

A. Section 099123 - Interior Painting: Field finishing of cabinet exterior.

1.03 REFERENCE STANDARDS

A. AWI (QCP) - Quality Certification Program; Current Edition.

B. AWI/AWMAC/WI (AWS) - Architectural Woodwork Standards, 2nd Edition; 2014, with Errata (2016).

C. AWMAC/WI (NAAWS) - North American Architectural Woodwork Standards; 2021, with Errata.

D. BHMA A156.9 - Cabinet Hardware; 2020.

E. HPVA HP-1 - American National Standard for Hardwood and Decorative Plywood; 2020.

1.04 ADMINISTRATIVE REQUIREMENTS

A. Preinstallation Meeting: Convene a preinstallation meeting not less than one week before starting work of this section; require attendance by all affected installers.

1.05 SUBMITTALS

A. See Section 013000 - Administrative Requirements for submittal procedures.

B. Shop Drawings: Indicate materials, component profiles, fastening methods, jointing details, and accessories.
   1. Scale of Drawings: 1-1/2 inch to 1 foot (125 mm to 1 m), minimum.

C. Product Data: Provide data for hardware accessories.

D. Samples: Submit actual samples of architectural cabinet construction, minimum 12 inches (300 mm) square, illustrating proposed cabinet, countertop, and shelf unit substrate and finish.

1.06 QUALITY ASSURANCE

A. Fabricator Qualifications: Company specializing in fabricating the products specified in this section with minimum five years of documented experience.
   1. Accredited participant in the specified certification program prior to the commencement of fabrication and throughout the duration of the project.

B. Quality Certification:
   1. Comply with AWI (QCP) woodwork association quality certification service/program in accordance with requirements for work specified in this section: www.awiqcp.org/#sle.
   2. Provide labels or certificates indicating that the installed work complies with AWI/AWMAC/WI (AWS) or AWMAC/WI (NAAWS) requirements for grade or grades specified.
   3. Provide designated labels on shop drawings as required by certification program.
   4. Provide designated labels on installed products as required by certification program.
   5. Submit certifications upon completion of installation that verifies this work is in compliance with specified requirements.
   6. Replace, repair, or rework all work for which certification is refused.

1.07 DELIVERY, STORAGE, AND HANDLING

A. Protect units from moisture damage.

1.08 FIELD CONDITIONS

A. During and after installation of custom cabinets, maintain temperature and humidity conditions in building spaces at same levels planned for occupancy.

PART 2 PRODUCTS

2.01 MANUFACTURERS

A. Single Source Responsibility: Provide and install this work from single fabricator.

2.02 CABINETS

A. Quality Standard: Custom Grade, in accordance with AWI/AWMAC/WI (AWS) or AWMAC/WI (NAAWS), unless noted otherwise.

B. Cabinets
   1. Finish - Exposed Exterior Surfaces: Wood.
   2. Finish - Exposed Interior Surfaces: Wood.
   3. Door and Drawer Front Edge Profiles: Square Edge with Natural Grain.
   4. Casework Construction Type: Type A - Frameless.
   5. Grained Face Layout for Cabinet and Door Fronts: Flush panel.
      a. Premium Grade:
         1) Cathedral Grain: Point grain crown up and run in the same direction for entire project.
   6. Cabinet Design Series: As indicated on drawings.
   7. Adjustable Shelf Loading: 40 psf (19.5 gm/sq cm).
   8. Cabinet Style: Flush overlay.
   9. Drawer Side Construction: Multiple-dovetailed.

2.03 WOOD-BASED COMPONENTS

A. Wood fabricated from old growth timber is not permitted.

2.04 HARDWOOD PLYWOOD PANELS

A. Hardwood Plywood: Plywood manufactured for nonstructural decorative applications; consisting of faces and backs applied to a variety of core types; comply with HPVA HP-1.
   1. Woodwork Quality Standard: Panels complying with specified woodwork quality standard.
   2. Face: Birch; Baltic; grade AA.
   3. Back: Birch; plain-sliced.
   4. Panel: Type II plywood with interior bond line.
   5. Products:
      a. American Modern Cabinetry; Hardwood Plywood Panels: www.americanmoderncabinetryllc.com/#sle.
      b. Roseburg Forest Products; SkyPly Hardwood Plywood: www.roseburg.com/#sle.
      c. Substitutions: See Section 016000 - Product Requirements.

2.05 COUNTERTOPS

A. Countertops: 20 Gauge mild hot rooled steel. Ulta-clear powder coated

2.06 ACCESSORIES

A. Adhesive: Type recommended by fabricator to suit application.

B. Fasteners: Size and type to suit application.

C. Bolts, Nuts, Washers, Lags, Pins, and Screws: Of size and type to suit application; galvanized finish in concealed locations and stainless steel finish in exposed locations.

D. Grommets: Standard rubber grommets for cut-outs, in color to match adjacent surface.

2.07 HARDWARE

A. Cabinet Hardware: Comply with BHMA A156.9 for hardware types and grades indicated below:
   1. Hardware Types: As indicated on drawings.

2. Product Grade: Grade 2.

B. Adjustable Shelf Supports: Standard side-mounted system using multiple holes for pin supports and coordinated self rests, satin chrome finish, for nominal 1 inch (25 mm) spacing adjustments.

C. Countertop Support Brackets: Fixed, L-shaped, face-of-stud mounting.
1. Materials: Steel; T-shape cross-section.
a. Finish: Manufacturer's standard, factory-applied, powder coat.
b. Color: Black.
c. Height: 9 inches (230 mm).
d. Support Length: 9 inches (230 mm).
e. Width: 1 inch (25 mm).

D. Drawer and Door Pulls: Tab Pull sold metal satin nickel finish.

E. Cabinet Catches and Latches:
1. Manufacturers:
a. Knape & Vogt Manufacturing Company: www.knapeandvogt.com/#sle.
b. Titus Cabinet Hardware; Push Latch: www.titusplus.com/us/en/#sle.
2. Substitutions: See Section 016000 - Product Requirements.

F. Mechanical Fasteners:
1. Manufacturers:
a. Titus Cabinet Hardware; Cabinet Connectors: www.titusplus.com/us/en/#sle.

G. Drawer Slides:
1. Type: Full extension.
2. Static Load Capacity: Heavy Duty grade.
3. Mounting: Side mounted.
4. Stops: Integral type.
5. Features: Provide self closing/stay closed type.
6. Manufacturers:
a. Accuride International, Inc; Heavy-Duty Drawer Slides: www.accuride.com/#sle.
b. Blum, Inc: www.blum.com/#sle.
c. Knape & Vogt Manufacturing Company; Heavy-Duty Drawer Slides: www.knapeandvogt.com/#sle.

H. Soft-Close, Door and Drawer Adjustable Dampers:
1. Manufacturers:
a. Grass America Inc: www.grassusa.com/#sle.
b. Titus Cabinet Hardware: www.titusplus.com/us/en/#sle.
c. Substitutions: See Section 016000 - Product Requirements.

I. Hinges: European style concealed self-closing type, steel with nickel-plated finish.
1. Manufacturers:
a. Blum, Inc: www.blum.com/#sle.
b. Grass America Inc: www.grassusa.com/#sle.

2.08 FABRICATION

A. Assembly: Shop assemble cabinets for delivery to site in units easily handled and to permit passage through building openings.

B. Fitting: When necessary to cut and fit on site, provide materials with ample allowance for cutting. Provide matching trim for scribing and site cutting.

C. Matching Wood Grain: Comply with requirements of quality standard for specified Grade and as follows:
1. Provide balance matched panels at each elevation.
2. Provide sequence matching across each elevation.

3. Carry figure of cabinet fronts to toe kicks.

D. Provide cutouts for plumbing fixtures. Verify locations of cutouts from on-site dimensions. Seal cut edges.

2.09 SHOP FINISHING

A. Sand work smooth and set exposed nails and screws.

B. On items to receive transparent finishes, use wood filler matching or blending with surrounding surfaces and of types recommended for applied finishes.

C. Finish work in accordance with AWI/AWMAC/WI (AWS) or AWMAC/WI (NAAWS), Section 5 - Finishing for grade specified and as follows:
1. Transparent:
a. Sheen: Satin.

PART 3 EXECUTION

3.01 EXAMINATION

A. Verify adequacy of backing and support framing.

B. Verify location and sizes of utility rough-in associated with work of this section.

3.02 INSTALLATION

A. Install work in accordance with AWI/AWMAC/WI (AWS) or AWMAC/WI (NAAWS) requirements for grade indicated.

B. Set and secure custom cabinets in place, assuring that they are rigid, plumb, and level.

3.03 ADJUSTING

A. Adjust installed work.

B. Adjust moving or operating parts to function smoothly and correctly.

3.04 CLEANING

A. Clean casework, counters, shelves, hardware, fittings, and fixtures.

END OF SECTION 064100

SECTION 070543
CLADDING SUPPORT SYSTEMS

PART 1 GENERAL

1.01 SECTION INCLUDES

A. Cladding support systems, directly attached to substrates.

B. Cladding support systems, insulation penetrating.

C. Cladding support systems, dual systems.

1.02 RELATED REQUIREMENTS

A. Section 042600 - Single-Wythe Unit Masonry.

B. Section 054000 - Cold-Formed Metal Framing.

C. Section 061000 - Rough Carpentry.

D. Section 072100 - Thermal Insulation.

E. Section 072700 - Air Barriers.

F. Section 074213.16 - Metal Plate Wall Panels.

G. Section 074213.23 - Metal Composite Material Wall Panels.

1.03 ABBREVIATIONS AND ACRONYMS

A. FRP: Fiber-reinforced polymer.

B. PVDF: Polyvinylidene Fluoride.

C. Zn-Al-Mg: Zinc-aluminum-magnesium.

1.04 DEFINITIONS

A. Continuous Insulation: As defined by ASHRAE Std 90.1 I-P.

1.05 REFERENCE STANDARDS

A. ASHRAE Std 90.1 I-P - Energy Standard for Buildings Except Low-Rise Residential Buildings; Most Recent Edition Adopted by Authority Having Jurisdiction, Including All Applicable Amendments and Supplements.

B. ASTM A653/A653M - Standard Specification for Steel Sheet, Zinc-Coated (Galvanized) or Zinc-Iron Alloy-Coated (Galvannealed) by the Hot-Dip Process; 2023.

C. ICC (IECC) - International Energy Conservation Code; Most Recent Edition Adopted by Authority Having Jurisdiction, Including All Applicable Amendments and Supplements.

1.06 ADMINISTRATIVE REQUIREMENTS

A. Coordination: Coordinate cladding support system manufacturer's requirements with requirements of exterior structural wall assemblies.

B. Preinstallation Meetings:
   1. Schedule meeting to occur after final approval of submittals by Architect.
   2. Agenda: Review exterior structural wall assembly requirements and cladding fastening requirements.
   3. Required Attendees: Contractor, cladding support system subcontractors and cladding subcontractors.
   4. Invited Attendees: Owner and Architect.

1.07 SUBMITTALS

A. See Section 013000 - Administrative Requirements for submittal procedures.

B. Samples:
   1. Rails Per Type: Two units, 12 inches (300 mm) long.
   2. Clips Per Type: Two units.

C. Certificate: Certify cladding support systems of this section meet or exceed specified design criteria.

D. Design Data: Submit for information, project-specific thermal performance values for above-grade walls; prepared by professional engineer; substantiate values based on alternative compliance methods described in ASHRAE Std 90.1 I-P and acceptable by AHJ.
   1. Submit comprehensive, three-dimensional, thermal modeling report indicating framing system's impact on continuous insulation U-factors.

1.08 QUALITY ASSURANCE

A. Manufacturer Qualifications: Company specializing in manufacturing products specified in this section, with at least three years of documented experience.

B. Documents at Project Site: Maintain at project site one copy of manufacturer's installation instructions and shop drawings.

1.09 MOCK-UPS

A. See Section 014000 - Quality Requirements for additional requirements.

B. Construct cladding support system mock-up, 12 feet (3.7 m) long by 8 feet (2.4 m) high.

C. Mock-up may remain as part of work.

1.10 DELIVERY, STORAGE, AND HANDLING

A. See Section 017419 - Construction Waste Management and Disposal for packaging waste requirements.

B. Deliver products to project site in wrapped, protected, unbroken packaging with product identification labeling.

C. Store products under cover and elevated above grade.

D. Handle products without damaging; prevent bending, warping, and twisting to surfaces, edges, or corners.

1.11 WARRANTY

A. See Section 017800 - Closeout Submittals for additional warranty requirements.

B. Manufacturer's Special Warranty: Provide 10-year warranty for cladding support system components, including structural failure of components, commencing on Date of Substantial Completion. Complete forms in Owner's name and register with warrantor.

PART 2 PRODUCTS

2.01 MANUFACTURERS

A. Advanced Architectural Products, LLC; Green Girt: www.smartcisystems.com/#sle.

B. Hohmann & Barnard, Inc; HB RS EZclad Rainscreen Support System: www.h-b.com/#sle.

C. Strongwell, Strongirt: www.strongirt.com.

D. Armatherm, Armagirt: www.armatherm.com

E. Substitutions: See Section 016000 - Product Requirements.

F. Source Limitations: Provide complete cladding support system including wall fasteners and wall anchors from single manufacturer.

2.02 EXTERIOR WALL ASSEMBLIES WITH CLADDING SUPPORT SYSTEMS

A. Cladding Support System Applications:
   1. Direct-attached-to-substrate cladding support systems.
   2. Insulation-penetrating cladding support systems.
   3. Dual-system cladding support systems.

B. Exterior Continuous Thermal Insulation:
   1. See Section 072100.

C. Air Barriers: See Section 072700.

D. Sheathing: See Section 061000.

E. Exterior Structural Wall Assemblies: See Section 042000 Unit Masonry.

2.03 CLADDING SUPPORT SYSTEMS, DIRECTLY ATTACHED TO SUBSTRATE

A. Perforated Metal, Hat-Shaped, Cladding Attachment Rails:
   1. Attachments to Substrate: Manufacturers recommended anchors fasten rails to substrates through attachment holes of flanges.
   2. Applications:
      a. Direct-attached-to-substrate cladding support systems; attaches directly to exterior structural wall assemblies.
   3. Material: Zn-Al-Mg-coated steel sheet.
   4. Thickness: 18 gauge, 0.048 inch (1.2 mm).
   5. Flange Width: Two equal flanges, each 1 inch (25 mm) wide, nominal.

2.04 CLADDING SUPPORT SYSTEMS, INSULATION PENETRATING

A. Z-Shaped, Thermally Improved Fiber-Reinforced Polymer (FRP) Girts With Steel Inserts:
   1. Description: Z-shaped, FRP girts with outboard and inboard faces; reinforced with integral, continuous, zinc-coated, steel sheet inserts.
   2. Attachment to Substrate: Girts penetrate continuous insulation; wall fasteners attach inboard faces of girts to steel-framed exterior wall assemblies.
   3. Rigid Foam Insulation Applications:
   4. Girt Depth: As indicated on drawings.
   5. Orientation: As indicated on drawings.
   6. Rail Spacing: In accordance with Contractor-provided structural design.
   7. Products:
      a. Advanced Architectural Products, LLC; SMARTci GreenGirt: www.smartcisystems.com/#sle.
      b. Armatherm, Armagirt: www.armatherm.com
      c. Strongwell, Strongirt: www.strongirt.com
      d. Substitutions: See Section 016000 - Product Requirements.

B. Bracket-and-Rail Systems:
   1. Description, Primary Components:
      a. Thermally isolated wall brackets attached to steel-framed wall assemblies.
   2. Attachments to Substrate: Brackets penetrate insulation; manufacturers recommend wall fasteners attach rails to steel-framed exterior wall assemblies through attachment holes of inboard face of brackets.
   3. Wall Brackets: Preassembled assemblies composed of polyoxymethylene, thermal-isolating base plates, formed steel brackets, and stem isolators.
   4. Rail to Bracket Connection: Fixed.
   5. Spacing: 16 inches (410 mm).
   6. Products:
      a. Knight Wall Systems; MFI System: www.knightwallsystems.com/#sle.
      b. Substitutions: See Section 016000 - Product Requirements.

2.05 CLADDING SUPPORT SYSTEMS, DUAL SYSTEMS

A. Description: Cladding support systems composed of primary and secondary systems; secondary system attached to and outboard of primary system.

B. Locations: Where indicated on drawings.

C. Inboard Primary Systems:
   1. Description: Thermally improved, insulation-penetrating, cladding support rails; attached to steel-framed wall assemblies; supports secondary cladding support system.
   2. Material: FRP (fiberglass) pultruded composite.

3. Depth: As indicated on drawings.
4. Thickness: Manufacturer's standard.
5. Rail Orientation: As indicated on drawings.

D. Outboard Secondary Rail Systems:
1. Description: Attached to and outboard of primary rail support systems.
2. Material: Zn-Al-Mg-coated steel sheet.
3. Depth: As indicated on drawings.
4. Thickness: 16 gauge, 0.060 inch (1.5 mm).
5. Orientation: As indicated on drawings.
6. Outward Face Width: 2 inches (51 mm).
7. Spacing: As indicated on drawings.
8. Products:
a. Cladding manufacter's standard compatible product
b. Substitutions: See Section 016000 - Product Requirements.

2.06 MATERIALS

A. Zinc-Aluminum-Magnesium (Zn-Al-Mg)-Coated Steel Sheet:

B. Zinc-Coated Steel Sheet:
1. Galvanized G90 coating designation; in accordance with ASTM A653/A653M.

C. Fiberglass Reinforced Polymer (FRP):

2.07 FABRICATION

A. Shop fabricate to greatest extent possible.

2.08 ACCESSORIES

A. Miscellaneous Nonstructural Accessories: Provide nonstructural accessories; flashings, sealants, tapes, and shims as recommended by manufacturer, suitable for project-specific applications, and compatible with system components.

B. Miscellaneous Structural Metal Accessories: For metal accessories under superimposed structural loads, provide corrosion-resistant-coated steel bracing, furring, and clips in accordance with Contractor-provided structural design of cladding system.

C. Metal Accessories: Provide transition units as recommended by manufacturer, suitable for project-specific applications, and compatible with system components.

D. Miscellaneous Thermal Isolation Accessories: Manufacturer's thermoplastic shims that do not decrease thermal or structural system performance, thickness, shape, and structural compressive strength suitable for project-specific applications.

E. Fasteners Between Claddings and Cladding Support Systems:

F. Wall Anchors:
1. Manufacturer's corrosion-resistant-coated steel wall anchors with recommended washers for anchoring cladding support systems to concrete structural wall assemblies.
2. Concrete Wall Substrates: Manufacturers recommended masonry or concrete screw anchors in predrilled holes.

G. Wall Fasteners:
1. Manufacturer's corrosion-resistant-coated steel wall fasteners for attaching cladding support systems to steel-framed structural wall assemblies.
2. Cold-Formed Steel Substrates: Manufacturer's recommended self-tapping metal screws.

PART 3 EXECUTION

3.01 EXAMINATION

A. Verification of Conditions:
1. Verify substrates comply with contract documents, including specified tolerances, and are ready to receive work of this section.

2. Verify air barrier, wall flashing, and rigid insulation work comply with contract documents.

B. Do not commence installation until noncompliant conditions have been corrected.

3.02 PREPARATION

A. Protection of In-Place Conditions: Protect air barrier work from damage.

B. Surface Preparation:
1. Prepare substrate surfaces using methods in accordance with cladding support system manufacturer's written instructions.

3.03 INSTALLATION

A. Installation of Cladding Support System Substrates.
1. See Section 042600 for installation of concrete masonry wall substrates.
2. See Section 054000 for installation of cold-formed, steel-stud framing wall substrates.

B. Installation of cladding systems:
1. See Section 074213.16 for installation of metal plate wall panels.
2. See Section 074213.23 for installation of metal composite wall panels.

3.04 TOLERANCES

A. Install cladding support systems plumb with noncumulative maximum variation of:
1. 1/4 inch in 20 feet (1 mm in 1 m).

B. Install cladding support systems level with noncumulative maximum variation of:
1. 1/4 inch in 20 feet (1 mm in 1 m).

3.05 FIELD QUALITY CONTROL

A. See Section 014000 - Quality Requirements for additional requirements.

3.06 CLEANING

A. See Section 017000 - Execution and Closeout Requirements for additional requirements.

3.07 PROTECTION

A. Protect installed cladding support systems from subsequent construction operations.

END OF SECTION 070543

This page intentionally left blank

SECTION 071113
BITUMINOUS DAMPPROOFING

PART 1 GENERAL

1.01 SECTION INCLUDES

A. Bituminous dampproofing.

B. Protection boards.

1.02 RELATED REQUIREMENTS

A. Section 072100 - Thermal Insulation: Rigid insulation board used as protection board.

B. Section 312323 - Fill.

1.03 REFERENCE STANDARDS

A. ASTM D41/D41M - Standard Specification for Asphalt Primer Used in Roofing, Dampproofing, and Waterproofing; 2011 (Reapproved 2023).

B. ASTM D449/D449M - Standard Specification for Asphalt Used in Dampproofing and Waterproofing; 2003 (Reapproved 2021).

C. ASTM D4479/D4479M - Standard Specification for Asphalt Roof Coatings - Asbestos-Free; 2007 (Reapproved 2018).

D. ASTM D4586/D4586M - Standard Specification for Asphalt Roof Cement, Asbestos-Free; 2007 (Reapproved 2018).

1.04 SUBMITTALS

A. See Section 013000 - Administrative Requirements for submittal procedures.

B. Product Data: Provide properties of primer, bitumen, and mastics.

1.05 FIELD CONDITIONS

A. Maintain ambient temperatures above 40 degrees F (5 degrees C) for 24 hours before and during application until dampproofing has cured.

PART 2 PRODUCTS

2.01 MANUFACTURERS

A. Karnak Corporation: www.karnakcorp.com/#sle.

B. Mar-flex Waterproofing & Building Products: www.mar-flex.com/#sle.

C. W. R. Meadows, Inc: www.wrmeadows.com/#sle.

D. Substitutions: See Section 016000 - Product Requirements.

2.02 BITUMINOUS DAMPPROOFING

A. Bituminous Dampproofing: Cold-applied, spray-grade; asphalt base, volatile petroleum solvents, and other content, suitable for application by spray, brush, roller, or squeegee; asbestos-free; suitable for application on vertical and horizontal surfaces.
   1. Composition: ASTM D4479/D4479M Type I, asbestos free.
   2. VOC Content: Not more than permitted by local, State, and federal regulations.
   3. Applied Thickness: 1/16 inch (1.5 mm), minimum, wet film.

2.03 BITUMEN MATERIALS

A. Hot Asphaltic Type:
   1. Asphalt: ASTM D449/D449M, Type I.
   2. Primer: ASTM D41/D41M, compatible with substrate.
   3. Asphalt Roof Cement: ASTM D4586/D4586M, Type I, asbestos-free.

PART 3 EXECUTION

3.01 EXAMINATION

A. Verify existing conditions are acceptable prior to starting this work.

B. Verify substrate surfaces are durable, free of matter detrimental to adhesion or application of dampproofing system.

C. Verify that items penetrating surfaces to receive dampproofing are securely installed.

3.02 PREPARATION

A. Protect adjacent surfaces not designated to receive dampproofing.

B. Clean and prepare surfaces to receive dampproofing in accordance with manufacturer's instructions.

C. Do not apply dampproofing to surfaces unacceptable to manufacturer.

D. Apply mastic to seal penetrations, small cracks, or minor honeycombs in substrate.

3.03 APPLICATION

A. Foundation Walls: Apply two coats of asphalt dampproofing.

B. Apply bitumen by spray application. or Roller or Brush

C. Apply bitumen at a temperature limited by equiviscous temperature (EVT) plus or minus 25 degrees F (14 degrees C); do not exceed finish blowing temperature for four hours.

D. Apply from 2 inches (50 mm) below finish grade elevation down to top of footings.

E. Seal items watertight with mastic, that project through dampproofing surface.

F. Place protection board directly over dampproofing, butt joints, and adhere to tacky dampproofing.

G. Scribe and cut boards around projections, penetrations, and interruptions.

END OF SECTION 071113

SECTION 071900
WATER REPELLENTS

PART 1 GENERAL

1.01 SECTION INCLUDES

A. Water repellents applied to exterior, masonry surfaces.

B. Pressure washing.

1.02 REFERENCE STANDARDS

A. ASTM D5095 - Standard Test Method for Determination of the Nonvolatile Content in Silanes, Siloxanes and Silane-Siloxane Blends Used in Masonry Water Repellent Treatments; 1991 (Reapproved 2022).

1.03 ADMINISTRATIVE REQUIREMENTS

A. Preinstallation Meeting: Convene a meeting at least one week prior to starting work; require attendance of affected installers; invite Architect and Owner.

1.04 SUBMITTALS

A. See Section 013000 - Administrative Requirements for submittal procedures.

1.05 QUALITY ASSURANCE

A. Manufacturer Qualifications: Company specializing in manufacturing products specified in this section, with not less than three years documented experience.

B. Installer Qualifications: Company specializing in performing work of type specified and with at least three years of documented experience

C. Owner reserves the right to provide continuous independent inspection of surface preparation and application of water repellent.

1.06 MOCK-UPS

A. See Section 014000 - Quality Requirements for additional requirements.

B. Prepare representative surface 36 by 36 inches (0.91 by 0.91 m) in size using specified materials and preparation and application methods on surfaces identical to those to be coated; approved mock-up constitutes standard for workmanship.

C. For proposed substitutions, prepare side-by-side mock-ups of specified and substitute products.

D. Locate where directed.

E. Mock-up may remain as part of work.

1.07 FIELD CONDITIONS

A. Protect liquid materials from freezing.

B. Do not apply water repellent when ambient temperature is lower than 50 degrees F (10 degrees C) or higher than 100 degrees F (38 degrees C).

1.08 WARRANTY

A. See Section 017800 - Closeout Submittals for additional warranty requirements.

PART 2 PRODUCTS

2.01 MANUFACTURERS

A. Silane, Siloxane, Silane-Siloxane Blend, and Siliconate Water Repellents:
   1. BASF Construction Chemicals: www.buildingsystems.basf.com/#sle.
   2. Pecora Corporation: www.pecora.com/#sle.
   3. PROSOCO, Inc: www.prosoco.com/#sle.
   4. Sherwin-Williams Company: www.sherwin-williams.com/#sle.
   5. W. R. Meadows, Inc: www.wrmeadows.com/#sle.
   6. Substitutions: See Section 016000 - Product Requirements.

2.02 MATERIALS

A. Specific product to be used will be determined by side-by-side mock-up testing of at least three products meeting specified requirements; prepare mock-ups as specified above; submit cost breakdown for each product used in mock-up, including both unit and total costs.

B. Water Repellent: Non-glossy, colorless, penetrating, water-vapor-permeable, non-yellowing sealer, that dries invisibly leaving appearance of substrate unchanged.
   1. Applications: Vertical surfaces and non-traffic horizontal surfaces.
   2. Number of Coats: One.
   3. Maintains dry appearance when wetted.
   4. Silane, siloxane, silane-siloxane blend, or siliconate that reacts chemically with concrete and masonry.
      a. Manufacturers:
         1) PROSOCO, Inc; Consolideck SL100 Water Repellent, with VOC of 400 g/L or less: www.prosoco.com/#sle.

PART 3 EXECUTION

3.01 EXAMINATION

A. Verify existing conditions before starting work.

B. Verify joint sealants are installed and cured.

C. Verify surfaces to be coated are dry, clean, and free of efflorescence, oil, or other matter detrimental to application of water repellent.

3.02 PREPARATION

A. Protection of Adjacent Work:
   1. Protect adjacent landscaping, property, and vehicles from drips and overspray.
   2. Protect adjacent surfaces not intended to receive water repellent.

B. Prepare surfaces to be coated as recommended by water repellent manufacturer for best results.

C. Do not start work until masonry mortar substrate is cured a minimum of 60 days.

D. Remove oil and foreign substances with a chemical solvent that will not affect water repellent.

E. Pressure wash surfaces to be coated.
   1. Firm Masonry (Concrete Masonry Units): High pressure wash at 1,500 to 4,000 psi (10 to 30 MPa), at 6 to 12 inches (150 to 300 mm) from surface.

F. Allow surfaces to dry completely to degree recommended by water repellent manufacturer before starting coating work.

3.03 APPLICATION

A. Apply water repellent in accordance with manufacturer's instructions, using procedures and application methods recommended as producing the best results.

B. Apply one coat, minimum.

C. Remove water repellent from unintended surfaces immediately by a method instructed by water repellent manufacturer.

END OF SECTION 071900

SECTION 072100
THERMAL INSULATION

PART 1 GENERAL

4.01 SECTION INCLUDES

A. Board insulation at cavity wall construction, perimeter foundation wall, and exterior wall behind Masonry veneer wall finish.

B. Batt insulation and vapor retarder in exterior wall, ceiling, and roof construction.

C. Batt insulation for filling perimeter window and door shim spaces and crevices in exterior wall and roof.

4.02 RELATED REQUIREMENTS

A. Section 075400 - Thermoplastic Membrane Roofing: Installation requirements for board insulation over low slope roof deck.

4.03 DEFINITIONS

A. Mineral Fiber Material Composition: Insulation referred to as mineral fiber block, board, and blanket insulation is composed of fibers from mineral based substances such as rock, slag, or glass and processed from the molten state into fibrous form.
   1. Based on type of insulation substance, the material will be referred to as a mineral fiber when having a rock or slag base, and glass fiber with a glass or silica sand base, also considered a mineral.
   2. Insulation blankets are flexible units consisting of felted, bonded, or unbonded fibers formed into rolls or flat cut pieces referred to as batts; rolls are simply longer versions of batts.
   3. For additional information about mineral fiber and the various classification types, refer to the following reference standards; ASTM C553, ASTM C612, ASTM C665, and ASTM C726.

4.04 REFERENCE STANDARDS

A. ASTM C518 - Standard Test Method for Steady-State Thermal Transmission Properties by Means of the Heat Flow Meter Apparatus; 2021.

B. ASTM C553 - Standard Specification for Mineral Fiber Blanket Thermal Insulation for Commercial and Industrial Applications; 2013 (Reapproved 2019).

C. ASTM C578 - Standard Specification for Rigid, Cellular Polystyrene Thermal Insulation; 2023.

D. ASTM C612 - Standard Specification for Mineral Fiber Block and Board Thermal Insulation; 2014 (Reapproved 2019).

E. ASTM C665 - Standard Specification for Mineral-Fiber Blanket Thermal Insulation for Light Frame Construction and Manufactured Housing; 2023.

F. ASTM C726 - Standard Specification for Mineral Wool Roof Insulation Board; 2017.

G. ASTM C1289 - Standard Specification for Faced Rigid Cellular Polyisocyanurate Thermal Insulation Board; 2023a.

H. ASTM E84 - Standard Test Method for Surface Burning Characteristics of Building Materials; 2023d.

4.05 SUBMITTALS

A. See Section 013000 - Administrative Requirements for submittal procedures.

PART 2 PRODUCTS

5.01 APPLICATIONS

A. Insulation at Perimeter of Foundation: Extruded polystyrene (XPS) board.

B. Insulation Inside Masonry Cavity Walls: Polyisocyanurate board.

C. Insulation Over Metal Stud Framed Walls, Continuous: Polyisocyanurate board.

D. Insulation in Wood Framed Walls: Batt insulation with no vapor retarder.

5.02 FOAM BOARD INSULATION MATERIALS

A. Extruded Polystyrene (XPS) Board Insulation: Comply with ASTM C578 with either natural skin or cut cell surfaces.
   1. Flame Spread Index (FSI): Class A - 0 to 25, when tested in accordance with ASTM E84.
   2. Smoke Developed Index (SDI): 450 or less, when tested in accordance with ASTM E84.
   3. Type and Thermal Resistance, R-value (RSI-value): Type IV, 5.0 (0.88), minimum, per 1 inch (25.4 mm) thickness at 75 degrees F (24 degrees C) mean temperature.

B. Polyisocyanurate (ISO) Board Insulation: Rigid cellular foam, comply with ASTM C1289.
   1. Classifications:
      a. Type II: Faced with either cellulosic facers or glass fiber mat facers on both major surfaces of the core foam.
         1) Class 1 - Faced with glass fiber reinforced cellulosic facers on both major surfaces of core foam.
         2) Compressive Strength: Classes 1-2-3, Grade 1 - 16 psi (110 kPa), minimum.
         3) Thermal Resistance, R-value (RSI-value): At 1-1/2 inch (38.1 mm) thick; Class 1, Grades 1-2-3 - 8.4 (1.48), minimum, at 75 degrees F (24 degrees C).
   2. Board Size: 48 inch by 96 inch (1220 mm by 2440 mm).
   3. Board Thickness: 2.0 inch (50 mm).
   4. Board Edges: Square.

5.03 MINERAL FIBER BOARD INSULATION MATERIALS

A. Mineral Wool Block and Board Thermal Insulation: Complying with ASTM C612.
   1. Facing: None, unfaced.
   2. Flame Spread Index: 25 or less, when tested with facing, if any, in accordance with ASTM E84.
   3. Smoke Developed Index: 50 or less, when tested with facing, if any, in accordance with ASTM E84.
   4. Board Thickness: 2 inches (51 mm).
   5. Board Edges: Square.
   6. Thermal Conductivity (k-factor): Btu inch/hr sq ft degrees F (W/m K) of 0.26 (0.037) per inch, minimum, at 75 degrees F (24 degrees C) when tested in accordance with ASTM C518.
   7. Products:
      a. CertainTeed Corporation: www.certainteed.com/#sle.
      b. Johns Manville: www.jm.com/#sle.
      c. Owens Corning Corporation: www.ocbuildingspec.com/#sle.
      d. ROCKWOOL; COMFORTBOARD 80: www.rockwool.com/#sle.

5.04 MINERAL FIBER BLANKET INSULATION MATERIALS

A. Mineral Wool Blanket Thermal Insulation: Flexible or semi-rigid preformed insulation, complying with ASTM C665.
   1. Flame Spread Index: 25 or less, when tested in accordance with ASTM E84.
   2. Smoke Developed Index: 450 or less, when tested in accordance with ASTM E84.
   3. Thickness: Fill cavity space shown on drawings
   4. Products:
      a. Johns Manville; MinWool Sound Attenuation Fire Batts: www.jm.com/#sle.
      b. ROCKWOOL; COMFORTBATT: www.rockwool.com/#sle.
      c. Thermafiber, Inc; SAFB: www.thermafiber.com/#sle.
      d. Substitutions: See Section 016000 - Product Requirements.

5.05 ACCESSORIES

A. Sill Plate Sealer: Closed-cell foam tape with rubberized adhesive membrane; bridges gap between foundation structure and sill plate or skirt board.
   1. Width: 5-1/2 inches (140 mm).
   2. Ultraviolet (UV) and Weathering Resistance: Approved in writing by manufacturer for up to 30 days of weather exposure.

PART 3 EXECUTION

6.01 EXAMINATION

A. Verify that substrate, adjacent materials, and insulation materials are dry and that substrates are ready to receive insulation.

B. Verify substrate surfaces are flat, free of honeycomb, fins, irregularities, or materials or substances that may impede adhesive bond.

6.02 BOARD INSTALLATION AT FOUNDATION PERIMETER

A. Install boards horizontally on foundation perimeter.

B. Cut and fit insulation tightly to protrusions or interruptions to the insulation plane.

6.03 BOARD INSTALLATION AT EXTERIOR WALLS

A. Install boards horizontally on walls.
   1. Place boards to maximize adhesive contact.
   2. Butt edges and ends tightly to adjacent boards and protrusions.

B. Cut and fit insulation tightly to protrusions or interruptions to the insulation plane.

6.04 BOARD INSTALLATION AT CAVITY WALLS

A. Install boards to fit snugly between wall ties.

B. Install boards horizontally on walls.

C. Cut and fit insulation tightly to protrusions or interruptions to the insulation plane.

6.05 BATT INSTALLATION

A. Install insulation in accordance with manufacturer's instructions.

B. Install in exterior wall spaces without gaps or voids. Do not compress insulation.

C. Trim insulation neatly to fit spaces. Insulate miscellaneous gaps and voids.

D. Fit insulation tightly in cavities and tightly to exterior side of mechanical and electrical services within the plane of the insulation.

6.06 FIELD QUALITY CONTROL

A. See Section 014000 - Quality Requirements for additional requirements.

6.07 PROTECTION

A. Do not permit installed insulation to be damaged prior to its concealment.

END OF SECTION 072100

This page intentionally left blank

SECTION 072119
FOAMED-IN-PLACE INSULATION

PART 1 GENERAL

1.01 SECTION INCLUDES

A. Foamed-in-place insulation.
   1. In exterior wall crevices.
   2. At junctions of dissimilar wall and roof materials.

B. Protective intumescent coating.

1.02 REFERENCE STANDARDS

A. ASTM C518 - Standard Test Method for Steady-State Thermal Transmission Properties by Means of the Heat Flow Meter Apparatus; 2021.

B. ASTM D1621 - Standard Test Method for Compressive Properties of Rigid Cellular Plastics; 2016 (Reapproved 2023).

C. ASTM D1622 - Standard Test Method for Apparent Density of Rigid Cellular Plastics; 2020.

D. ASTM D1623 - Standard Test Method for Tensile and Tensile Adhesion Properties of Rigid Cellular Plastics; 2017 (Reapproved 2023).

E. ASTM D2842 - Standard Test Method for Water Absorption of Rigid Cellular Plastics; 2019.

F. ASTM E84 - Standard Test Method for Surface Burning Characteristics of Building Materials; 2023d.

G. ASTM E96/E96M - Standard Test Methods for Gravimetric Determination of Water Vapor Transmission Rate of Materials; 2023.

H. ASTM E2178 - Standard Test Method for Determining Air Leakage Rate and Calculation of Air Permeance of Building Materials; 2021a.

I. FM 4880 - Examination Standard for Class 1 Fire Rating of Building Panels or Interior Finish Materials; 2022.

J. NFPA 286 - Standard Methods of Fire Tests for Evaluating Contribution of Wall and Ceiling Interior Finish to Room Fire Growth; 2024.

1.03 SUBMITTALS

A. See Section 013000 - Administrative Requirements for submittal procedures.

B. Product Data: Provide product description, insulation properties, overcoat properties, and preparation requirements.

C. Manufacturer's Installation Instructions: Indicate special procedures, and perimeter conditions requiring special attention.

D. Manufacturer Qualification: Submit documentation of current evaluation of proposed manufacturer and materials.

E. Installer Qualification: Submit documentation of current contractor accreditation and current installer certification. Keep copies of all contractor accreditation and installer certification on site during and after installation. Present on-site documentation upon request.

PART 2 PRODUCTS

2.01 MANUFACTURERS

A. Foamed-In-Place Insulation:
   1. BASF Corporation; WALLTITE US Series Closed Cell: www.spf.basf.com/#sle.
   2. Carlisle Spray Foam Insulation: www.carlislesfi.com/#sle.
   3. Henry Company; _____: www.henry.com/#sle.
   4. Huntsman Building Solutions; Heatlok HFO Pro: www.huntsmanbuildingsolutions.com/#sle.

5. Substitutions: See Section 016000 - Product Requirements.

2.02 MATERIALS

A. Foamed-In-Place Insulation: Medium-density, rigid or semi-rigid, closed cell polyurethane foam; foamed on-site, using blowing agent of water or non-ozone-depleting gas.
   1. Thermal Resistance: R-value (RSI-value) of 5.0 (0.88), minimum, per 1 inch (25.4 mm) thickness at 75 degrees F (24 degrees C) mean temperature when tested in accordance with ASTM C518.
   2. Water Vapor Permeance: Vapor retarder; 2 perms (115 ng/(Pa s sq m)), maximum, when tested at intended thickness in accordance with ASTM E96/E96M, desiccant method.
   3. Water Absorption: Less than 2 percent by volume, maximum, when tested in accordance with ASTM D2842.
   4. Air Permeance: 0.04 cfm per square foot (0.2 L/(s/sq m)), maximum, when tested at intended thickness in accordance with ASTM E2178 at 1.57 psf (75 Pa).
   5. Closed Cell Content: At least 90 percent.
   6. Surface Burning Characteristics: Flame spread/smoke developed index of 25/450, maximum, when tested in accordance with ASTM E84.

2.03 ACCESSORIES

A. Primer: As required by insulation manufacturer.

B. Protective Coating: Intumescent coating of type recommended by insulation manufacturer and as required to comply with applicable codes.
   1. Coating Type: Single component, water-based.
   2. Protected Insulation Type: Spray polyurethane foam (SPF).
   3. Application: Apply using brush, roller, or airless sprayer.
   4. Surface Burning Characteristics: Flame spread/smoke developed index of 25/450, maximum, when tested in accordance with ASTM E84.
   5. Color: White.

PART 3 EXECUTION

3.01 EXAMINATION

A. Verify work within construction spaces or crevices is complete before insulation application.

B. Verify that surfaces are clean, dry, and free of matter that may inhibit insulation adhesion.

3.02 PREPARATION

A. Mask and protect adjacent surfaces from over spray or dusting.

B. Apply primer in accordance with manufacturer's instructions.

3.03 APPLICATION

A. Apply insulation in accordance with manufacturer's instructions.

B. Apply insulation by spray method, to a uniform monolithic density without voids.

3.04 FIELD QUALITY CONTROL

A. See Section 014000 - Quality Requirements for additional requirements.

B. Field inspections and tests will be performed by an independent testing agency.

3.05 PROTECTION

A. Do not permit subsequent construction work to disturb applied insulation.

END OF SECTION 072119

SECTION 072700
AIR BARRIERS

PART 1 GENERAL

1.01 SECTION INCLUDES

A. Air barriers.

1.02 RELATED REQUIREMENTS

A. Section 061000 - Rough Carpentry: Air barrier under exterior cladding.

1.03 REFERENCE STANDARDS

A. ASTM D412 - Standard Test Methods for Vulcanized Rubber and Thermoplastic Elastomers--Tension; 2016 (Reapproved 2021).

B. ASTM D1970/D1970M - Standard Specification for Self-Adhering Polymer Modified Bituminous Sheet Materials Used as Steep Roofing Underlayment for Ice Dam Protection; 2021.

C. ASTM E84 - Standard Test Method for Surface Burning Characteristics of Building Materials; 2023d.

D. ASTM E96/E96M - Standard Test Methods for Gravimetric Determination of Water Vapor Transmission Rate of Materials; 2023.

E. ASTM E2178 - Standard Test Method for Determining Air Leakage Rate and Calculation of Air Permeance of Building Materials; 2021a.

F. NFPA 285 - Standard Fire Test Method for Evaluation of Fire Propagation Characteristics of Exterior Wall Assemblies Containing Combustible Components; 2023.

1.04 SUBMITTALS

A. See Section 013000 - Administrative Requirements for submittal procedures.

1.05 QUALITY ASSURANCE

A. Air Barrier Association of America (ABAA) Evaluated Air Barrier Assemblies; www.airbarrier.org/#sle: Use evaluated materials from a single manufacturer regularly engaged in air barrier material manufacture, and use secondary materials approved in writing by primary material manufacturer.

1.06 FIELD CONDITIONS

A. Maintain temperature and humidity recommended by materials manufacturers before, during, and after installation.

PART 2 PRODUCTS

2.01 AIR BARRIER MATERIALS (AIR IMPERMEABLE AND WATER VAPOR PERMEABLE)

A. Air Barrier, Fluid Applied: Vapor permeable, elastomeric waterproofing.
   1. Air Barrier Coating:
      a. Material: Acrylic.
      b. Dry Film Thickness (DFT): 20 mil, 0.020 inch (0.508 mm), minimum.
      c. Air Permeance: 0.004 cfm/sq ft (0.02 L/(s sq m)), maximum, when tested in accordance with ASTM E2178.
      d. Water Vapor Permeance: 11 perms (629 ng/(Pa s sq m)), minimum, when tested in accordance with ASTM E96/E96M using Procedure B - Water Method, at 73.4 degrees F (23 degrees C).
      e. Ultraviolet (UV) and Weathering Resistance: Approved by manufacturer for up to 90 days of weather exposure.
      f. Elongation: 300 percent, minimum, when tested in accordance with ASTM D412.
      g. Surface Burning Characteristics: Flame spread index of 25 or less, smoke developed index of 450 or less, Class A when tested in accordance with ASTM E84.
      h. Comply with NFPA 285 requirements for wall assembly.

i. Nail Sealability: Pass, when tested in accordance with ASTM D1970/D1970M.
j. Sealants, Tapes and Accessories: As recommended by coating manufacturer.
k. Products:
1) 3M Company: www.3M.com/construction/#sle.
2) Dow Chemical Company: consumer.dow.com/en-us/industry/ind-building-construction.html/#sle.
3) Henry Company: www.henry.com/#sle.
4) PROSOCO, Inc: www.prosoco.com/r-guard/#sle.
5) Soprema, Inc: www.soprema.us/#sle.
6) W. R. Meadows, Inc: www.wrmeadows.com/#sle.

2.02 ACCESSORIES

A. Sealants, Tapes, and Accessories for Sealing Air Barrier and Adjacent Substrates: As indicated or in compliance with air barrier manufacturer's installation instructions.

B. Stainless Steel Flashing: Flexible flashing with 2 mil, 0.002 inch (0.051 mm) thick Type 304 stainless steel sheet, 8 mil, 0.008 inch (0.203 mm) of butyl adhesive and siliconized release liner.
1. Roll Length: 50 feet (15.2 m) long.
2. Width: 6 inches (152 mm) wide.

PART 3 EXECUTION

3.01 EXAMINATION

A. Verify that surfaces and conditions are ready for work of this section.

B. Where existing conditions are responsibility of another installer, notify Architect of unsatisfactory conditions.

C. Do not proceed with this work until unsatisfactory conditions have been corrected.

3.02 PREPARATION

A. Remove projections, protruding fasteners, and loose or foreign matter that might interfere with proper installation.

B. Clean and prime substrate surfaces to receive adhesives and sealants in accordance with manufacturer's installation instructions.

3.03 INSTALLATION

A. Install materials in accordance with manufacturer's installation instructions.

B. Air Barriers: Install continuous airtight barrier over surfaces indicated, with sealed seams and with sealed joints to adjacent surfaces.

C. Apply sealants and adhesives within recommended temperature range in accordance with manufacturer's installation instructions.

D. Fluid-Applied Coatings or Membranes:
1. Prepare substrate in accordance with manufacturer's installation instructions; treat joints in substrate and between dissimilar materials as indicated.
2. Where exterior masonry veneer is being installed, install masonry anchors before installing air barrier over masonry; provide airtight seal around anchors.
3. Use flashing to seal to adjacent construction and to bridge joints in coating substrate.

E. Openings and Penetrations in Exterior Air Barriers:
1. Install flashing over sills, covering entire sill frame member, extending at least 5 inches (125 mm) onto air barrier and at least 6 inches (150 mm) up jambs; mechanically fasten stretched edges.
2. At openings with frames having nailing flanges, seal head and jamb flanges using a continuous bead of sealant compressed by flange and cover flanges with sealing tape at least 4 inches (100 mm) wide; do not seal sill flange.

3. At openings with nonflanged frames, seal air barrier to each side of framing at opening using flashing at least 9 inches (230 mm) wide, and covering entire depth of framing.
4. At head of openings, install flashing under air barrier extending at least 2 inches (50 mm) beyond face of jambs; seal air barrier to flashing.
5. At interior face of openings, seal gap between window/door frame and rough framing, using joint sealant over backer rod.
6. Service and Other Penetrations: Form flashing around penetrating item and seal to air barrier surface.

3.04 FIELD QUALITY CONTROL

A. See Section 014000 - Quality Requirements for additional requirements.

B. Coordination of ABAA Tests and Inspections:
1. Provide testing and inspection required by ABAA QAP.
2. Notify ABAA in writing of schedule for air barrier work, and allow adequate time for testing and inspection.
3. Cooperate with ABAA testing agency.
4. Allow access to air barrier work areas and staging.
5. Do not cover air barrier work until tested, inspected, and accepted.

C. Do not cover installed air barriers until required inspections have been completed.

3.05 PROTECTION

A. Do not leave materials exposed to weather longer than recommended by manufacturer.

END OF SECTION 072700

This page intentionally left blank

SECTION 074113
METAL ROOF PANELS

PART 1 GENERAL

1.01 SECTION INCLUDES

A. Metal roof panel system of preformed steel panels.

1.02 RELATED REQUIREMENTS

A. Section 051200 - Structural Steel Framing: Roof framing and purlins.

B. Section 077200 Roof Accesories Snow Guard Fencing

1.03 REFERENCE STANDARDS

A. AAMA 2605 - Voluntary Specification, Performance Requirements and Test Procedures for Superior Performing Organic Coatings on Aluminum Extrusions and Panels (with Coil Coating Appendix); 2022.

B. ASCE 7 - Minimum Design Loads and Associated Criteria for Buildings and Other Structures; Most Recent Edition Cited by Referring Code or Reference Standard.

C. ASTM A653/A653M - Standard Specification for Steel Sheet, Zinc-Coated (Galvanized) or Zinc-Iron Alloy-Coated (Galvannealed) by the Hot-Dip Process; 2023.

D. ASTM D1970/D1970M - Standard Specification for Self-Adhering Polymer Modified Bituminous Sheet Materials Used as Steep Roofing Underlayment for Ice Dam Protection; 2021.

E. ASTM E96/E96M - Standard Test Methods for Gravimetric Determination of Water Vapor Transmission Rate of Materials; 2023.

F. ASTM E1592 - Standard Test Method for Structural Performance of Sheet Metal Roof and Siding Systems by Uniform Static Air Pressure Difference; 2005 (Reapproved 2017).

G. IAS AC472 - Accreditation Criteria for Inspection Programs for Manufacturers of Metal Building Systems; 2018, with Editorial Revision (2019).

H. ICC-ES AC188 - Acceptance Criteria for Roof Underlayments; 2023.

I. PS 2 - Performance Standard for Wood Structural Panels; 2018.

J. UL 580 - Standard for Tests for Uplift Resistance of Roof Assemblies; Current Edition, Including All Revisions.

1.04 SUBMITTALS

A. See Section 013000 - Administrative Requirements for submittal procedures.

B. Shop Drawings: Include layouts of roof panels, details of edge and penetration conditions, spacing and type of connections, flashings, underlayments, and special conditions.
   1. Show work to be field-fabricated or field-assembled.

C. Test Reports: Indicate compliance of metal roofing system to specified requirements.

D. Warranty: Submit specified manufacturer's warranty and ensure that forms have been completed in Owner's name and are registered with manufacturer.

1.05 QUALITY ASSURANCE

A. Manufacturer Qualifications: Company specializing in manufacturing products specified in this section and with at least three years of documented experience.
   1. Accredited by IAS in accordance with IAS AC472.

1.06 MOCK-UPS

A. See Section 014000 - Quality Requirements for additional requirements.

B. Provide mock-up of 10 sq ft (.929 sq m), including underlayment and associated flashings.

C. Locate as directed by Architect.

D. Mock-up may remain as part of the work.

1.07 DELIVERY, STORAGE, AND HANDLING

A. See Section 017419 - Construction Waste Management and Disposal for packaging waste requirements.

B. Provide strippable plastic protection on prefinished roofing panels for removal after installation.

C. Store roofing panels on project site as recommended by manufacturer to minimize damage to panels prior to installation.

1.08 FIELD CONDITIONS

A. Do not install metal roof panels, underlayment when surface, ambient air, or wind chill temperatures are below 45 degrees F (7 degrees C).

1.09 WARRANTY

A. See Section 017800 - Closeout Submittals for additional warranty requirements.

B. Finish Warranty: Provide 5-year manufacturer warranty against excessive degradation of exterior finish. Include provision for replacement of units with excessive fading, chalking, or flaking. Complete forms in Owner's name and register with warrantor.

PART 2 PRODUCTS

2.01 MANUFACTURERS

A. Architectural Metal Roof Panel Manufacturers:
   1. ATAS International, Inc: www.atas.com/#sle.
   2. Berridge Manufacturing Company: www.berridge.com/#sle.
   3. MBCI, a Cornerstone Building Brands Company; Double-Lok Standing Seam Panel: www.mbci.com/#sle.
   4. Substitutions: See Section 016000 - Product Requirements.

2.02 PERFORMANCE REQUIREMENTS

A. Metal Roof Panels: Provide complete roofing assemblies, including roof panels, clips, fasteners, connectors, and miscellaneous accessories, tested for compliance with the following minimum standards:
   1. Structural Design Criteria: Provide panel assemblies designed to safely support design loads at support spacing indicated, with deflection not to exceed L/180 of span length(L) when tested in accordance with ASTM E1592.
   2. Overall: Complete weathertight system tested and approved in accordance with ASTM E1592.
   3. Wind Uplift: Class 90 wind uplift resistance of UL 580.
   4. Thermal Movement: Design system to accommodate without deformation anticipated thermal movement over ambient temperature range of 100 degrees F (56 degrees C).

2.03 METAL ROOF PANELS

A. Metal Roof Panels: Provide complete engineered system complying with specified requirements and capable of remaining weathertight while withstanding anticipated movement of substrate and thermally induced movement of roofing system.

B. Metal Panels: Factory-formed panels with factory-applied finish.
   1. Steel Panels:
      a. Zinc-coated steel complying with ASTM A653/A653M; minimum G60 (Z180) galvanizing.
      b. Steel Thickness: Minimum 24 gauge, 0.024 inch (0.61 mm).
   2. Profile: Standing seam, with minimum 1-inch (25.4 mm) seam height; concealed fastener system for field seaming with special tool.
   3. Texture: Smooth.
   4. Length: Full length of roof slope, without lapped horizontal joints.
   5. Width: Maximum panel coverage of 24 inches (610 mm).

2.04 ATTACHMENT SYSTEM

A. Concealed System: Provide manufacturer's standard stainless steel or nylon-coated aluminum concealed anchor clips designed for specific roofing system and engineered to meet performance requirements, including anticipated thermal movement.

2.05 FABRICATION

A. Panels: Provide factory or field fabricated panels with applied finish and accessory items, using manufacturer's standard processes as required to achieve specified appearance and performance requirements.

2.06 FINISHES

A. Fluoropolymer Coil Coating System: Polyvinylidene fluoride (PVDF) multi-coat superior performing organic coatings system complying with AAMA 2605, including at least 70 percent PVDF resin, and at least 80 percent of coil coated metal surfaces having minimum total dry film thickness (DFT) of 0.9 mil, 0.0009 inch (0.023 mm); color and gloss as selected by Architect from manufacturer’s standard line.

2.07 ACCESSORIES

A. Miscellaneous Sheet Metal Items: Provide flashings, trim, closure strips, caps, and equipment curbs of the same material, thickness, and finish as used for the roofing panels. Items completely concealed after installation may optionally be made of stainless steel.

B. Rib and Ridge Closures: Provide prefabricated, close-fitting components of steel with corrosion resistant finish or combination steel and closed-cell foam.

C. Sealants:
   1. Exposed Sealant: Elastomeric; silicone, polyurethane, or silyl-terminated polyether/polyurethane.
   2. Concealed Sealant: Non-curing butyl sealant or tape sealant.

D. Underlayment: Self-adhering polymer modified asphalt sheet complying with ASTM D1970/D1970M, with strippable release film and top surface of woven polypropylene sheet.
   1. Sheet Thickness: 22 mils, 0.022 inch (0.55 mm), minimum.
   2. Self Sealability: Nail sealability in accordance with ASTM D1970/D1970M.
   3. Water Vapor Permeance: 0.1 perm (5.72 ng/Pa s sq m), maximum, when tested in accordance with ASTM E96/E96M using Desiccant Method (Method A).
   4. Functional Temperature Range: Minus 45 degrees F (Minus 42.8 degrees C) to 250 degrees F (121 degrees C).
   5. Products:
      a. Certainteed Roofing: www.certainteed.com/#sle.
      b. Henry Company: www.henry.com/#sle.
      c. GCP Applied Technologies : Grace Ice and Water Shield.
      d. Substitutions: See Section 016000 - Product Requirements.

E. Roof Sheathing, CDX: PS 2 type, rated Structural I Sheathing.
   1. Bond Classification: Exterior.
   2. Span Rating: 60.
   3. Performance Category: 3/4 PERF CAT.

PART 3 EXECUTION

3.01 EXAMINATION

A. Do not begin installation of preformed metal roof panels until substrates have been properly prepared.

B. If substrate preparation is the responsibility of another installer, notify Architect of unsatisfactory preparation before proceeding.

3.02 PREPARATION

A. Coordinate roofing work with provisions for roof drainage, flashing, trim, penetrations, and other adjoining work to ensure that completed roof will be free of leaks.

B. Remove protective film from surface of roof panels immediately prior to installation; strip film carefully to avoid damage to prefinished surfaces.

C. Separate dissimilar metals by applying a bituminous coating, self-adhering rubberized asphalt sheet, or other permanent method approved by metal roof panel manufacturer.

D. At locations where metal will be in contact with wood or other absorbent material subject to wetting, seal joints with sealing compound and apply one coat of heavy-bodied bituminous paint.

3.03 INSTALLATION

A. Overall: Install roofing system in accordance with approved shop drawings and metal roof panel manufacturer's instructions and recommendations, as applicable to specific project conditions; securely anchor components of roofing system in place allowing for thermal and structural movement.
   1. Install roofing system with concealed clips and fasteners, except as otherwise recommended by manufacturer for specific circumstances.
   2. Minimize field cutting of panels. Where field cutting is required, use methods that will not distort panel profiles. Use of torches for field cutting is prohibited.

B. Accessories: Install necessary components that are required for complete roofing assembly, including flashings, trim, closure strips, rib closures, similar roof accessory items, and snow guard fencing.

C. Roof Panels: Install metal roof panels in accordance with manufacturer's installation instructions, minimizing transverse joints except at junction with penetrations.
   1. Install sealant or sealant tape at end laps and side joints as recommended by metal roof panel manufacturer.

3.04 CLEANING

A. See Section 017000 - Execution and Closeout Requirements for additional requirements.

B. Clean exposed sheet metal work at completion of installation. Remove grease and oil films, excess joint sealer, handling marks, and debris from installation, leaving the work clean and unmarked, free from dents, creases, waves, scratch marks, or other damage to the finish.

3.05 PROTECTION

A. Do not permit storage of materials or roof traffic on installed roof panels. Provide temporary walkways or planks as necessary to avoid damage to completed work. Protect roofing until completion of project.

B. Touch-up, repair, or replace damaged roof panels or accessories before Date of Substantial Completion.

END OF SECTION 074113

SECTION 074213.16
METAL PLATE WALL PANELS

PART 1 GENERAL

1.01 SECTION INCLUDES

A. Metal plate panels for walls and soffits, with related flashings and accessory components.
   1. Exterior weathering sheet metal wall panels.
   2. Perforated sheet metal panels

1.02 RELATED REQUIREMENTS

A. Section 042000 Unit Masonry

B. Section 042613 Masonry Veneer

C. Section 061000 - Rough Carpentry: Wall panel substrate sheathing.

D. Section 061000 - Rough Carpentry: Water-resistive barrier (WRB) behind wall panels.

E. Section 070543 Cladding Support System: Panel support.

F. Section 072100 - Thermal Insulation.

G. Section 072700 Air Barriers: Weather-resistive barrier behine wall panels.

1.03 REFERENCE STANDARDS

A. ASTM E330/E330M - Standard Test Method for Structural Performance of Exterior Windows, Doors, Skylights and Curtain Walls by Uniform Static Air Pressure Difference; 2014 (Reapproved 2021).

1.04 ADMINISTRATIVE REQUIREMENTS

A. Coordination: Coordinate panel installation with adjoining work such as water-resistive barrier (WRB), water drainage, flashing, trim, stud back-up, and soffits.

B. Preinstallation Meeting: Convene one week before starting work related to installation of wall panel substrate.
   1. Require attendance of parties directly effecting work of this section, as follows:
      a. Architect.
      b. Contractor.
   2. Review procedures for coordinated installation of wall assembly components by multiple installers and to maintain proper water-resistive barrier (WRB) and panel substrate performance requirements.

1.05 SUBMITTALS

A. See Section 013000 - Administrative Requirements for submittal procedures.

B. Product Data - Wall System: Manufacturer's data sheets on each product to be used, including:
   1. Physical characteristics of components shown on shop drawings.
   2. Storage and handling requirements and recommendations.
   3. Installation instructions and recommendations.

C. Shop Drawings: Indicate dimensions, layout, joints, construction details, support clips, pattern confirmation, and methods of anchorage.

D. Samples: Submit two samples of wall panel and soffit panel, 16 inch (406.4 mm) by 16 inch (406.4 mm) in size illustrating finish color, sheen, and texture.

E. Manufacturer's qualification statement.

F. Installer's qualification statement.

G. Warranty Documentation: Submit manufacturer warranty and ensure that forms have been completed in Owner's name and registered with manufacturer.

H. Warranty Documentation for Installation of Building Rainscreen Assembly: Submit installer warranty and ensure that forms have been completed in Owner's name and registered with installer.

1.06 QUALITY ASSURANCE

A. Manufacturer Qualifications: Company specializing in manufacturing products specified in this section with not less than three years of documented experience.

B. Installer Qualifications: Company specializing in performing work of the type specified with minimum three years of documented experience.

1.07 MOCK-UPS

A. See Section 014000 - Quality Requirements for additional requirements.

B. Construct mock-up, 10 feet (.929 m) long by 10 feet (.929 m) wide; include panel and soffit system, glazing, attachments to building frame, associated air/water barrier materials, weep drainage system, sealants and seals, and related wall insulation in mock-up.

C. Mock-up may remain as part of work.

1.08 DELIVERY, STORAGE, AND HANDLING

A. See Section 017419 - Construction Waste Management and Disposal for packaging waste requirements.

B. Protect panels from accelerated weathering by removing or venting sheet plastic shipping wrap.

C. Store prefinished material off ground and protected from weather; prevent twisting, bending, or abrasion, and provide ventilation to stored materials; slope metal sheets to ensure drainage.

D. Prevent contact with materials that may cause discoloration or staining of products.

1.09 FIELD CONDITIONS

A. Do not install panels when air temperature or relative humidity are outside manufacturer's limits.

1.10 WARRANTY

A. See Section 017800 - Closeout Submittals for additional warranty requirements.

B. Finish Warranty: Provide 5-year manufacturer warranty against excessive degradation of exterior finish. Include provision for replacement of units with excessive fading, chalking, or flaking. Complete forms in Owner's name and register with warrantor.

PART 2 PRODUCTS

2.01 MANUFACTURERS

A. Mild steel plate wall panels for weathering:
   1. Suitable fabrication shop that can fabricate the size and configuration of panels indicated on drawings

B. Pre-finished perforated sheet steel with custom pattern as indicated on drawings.
   1. Suitable fabrication shop that can fabricate the size and configuration of panels indicated on drawings.

2.02 PERFORMANCE REQUIREMENTS

A. Metal Plate Wall Panels System: Factory fabricated prefinished metal panel system, site assembled.
   1. Type of Wall Panel System: Component Rain Screen..
   2. Provide exterior wall panels, soffit panels, and subgirt framing assembly.
   3. Design and size components to support assembly dead loads, and to withstand live loads caused by positive and negative wind pressure acting normal to plane of wall.
   4. Design Pressure: In accordance with applicable codes.
   5. Wind Load Testing: In compliance with ASTM E330/E330M to obtain the following results:

a. Maximum Allowable Deflection of Non-Exposed Panels: L/60 for length(L) of span; no permanent deformation of panel system is allowed.
b. Maximum Allowable Deflection of Highly Visible Panels: L/175 for length(L) of span or 3/4 inch (19 mm) whichever is less, normal to plane of wall between supports of secured perimeter framing members.

6. Intermediate Panel Stiffeners: Provide as required by design loads applied to panels, and secured to rear face of panel with silicone based adhesive and of size and strength to maintain panel flatness; stiffener material is compatible with silicone.
7. Movement: Accommodate movement within system without damage to components or deterioration of seals, movement between system and perimeter components when subject to 100 degrees F (56 degrees C) seasonal temperature cycling; dynamic loading and release of loads; and deflection of structural support framing.
8. Drainage: Provide positive drainage to exterior for moisture entering or condensation occurring within panel system.
9. Fabrication: Formed true to shape, accurate in size, square, and free from distortion or defects; pieces of longest practical lengths.
10. Corners: Factory-fabricated in one continuous piece with minimum 2 inch (51 mm) returns.
11. Provide continuity of air/water barrier (AWB) seal at wall panel substrate and/or wall sheathing in coordination with material requirements; see Section 072500 and Section 061000.

2.03 COMPONENTS

A. Metal Plate Wall Panels:
1. Orientation: Vertical; style as indicated.
2. Joint Layout: As indicated on Drawings.
3. Material: Mild steel
a. Weathering Steel: 11 gauge, .125 inch (3.175 mm) minimum thickness
b. Perforated steel panel, 3/16 plate, (4.7625 mm).
4. Panel Width: As indicated on drawings.

B. Subgirts: Wall panel manufacturer's standard profile; to attach wall panel system to face of building structural wall.
1. See section 070543 Cladding Support Systems

C. Fasteners: Weathering Panels: Type 3 (weathering steel) versions of ASTM A325 and A490 bolts, nuts and washers

D. Fasteners: Perforated Sheet Steel Panels: Concealed fastening system according to manufacturer's standard installation.

2.04 MATERIALS

A. Air Barrier: See Section 072700

B. Substrate Wall Sheathing: See Section 061000.

C. Substrate Wall Insulation: See Section 072100.

2.05 FINISHES

A. Perforated steel sheet panel: Powder Coated

2.06 ACCESSORIES

A. See Section 070543 Cladding Support System

2.07 SOURCE QUALITY CONTROL

A. See Section 014000 - Quality Requirements for additional requirements.

PART 3 EXECUTION

3.01 EXAMINATION

A. Verify substrate framing members are ready to receive panels.

3.02 PREPARATION

A. Install subgirts perpendicular to panel length, securely fastened to substrates, shimmed and leveled to uniform plane, and spaced at intervals indicated.

B. Protect surrounding areas and adjacent surfaces from damage during execution of this work.

3.03 INSTALLATION

A. Install panels on walls in accordance with manufacturer's instructions and approved shop drawings.

B. Fasten panels to substrate structural supports; aligned, level, and plumb.

3.04 TOLERANCES

A. Maximum Offset From True Alignment Between Adjacent Members Butting or In Line: 1/16 inch (1.6 mm).

B. Maximum Variation from Plane or Location Indicated on Drawings: 1/4 inch (6.4 mm).

3.05 FIELD QUALITY CONTROL

A. See Section 014000 - Quality Requirements for additional requirements.

B. Do not cover installed air/water barriers until required inspections have been completed.

3.06 CLEANING

A. See Section 017000 - Execution and Closeout Requirements for additional requirements.

B. Clean and wash prefinished surfaces with mild soap and water; rinse with clean water.

3.07 PROTECTION

A. Protect installed products from damage until Date of Substantial Completion.

END OF SECTION 074213.16

SECTION 074213.23
METAL COMPOSITE MATERIAL WALL PANELS

PART 1 GENERAL

1.01 SECTION INCLUDES

A. Exterior cladding consisting of formed metal composite material (MCM) sheet, secondary supports, and anchors to structure, attached to solid backup.

B. Matching flashing and trim.

1.02 RELATED REQUIREMENTS

A. Section 054000 - Cold-Formed Metal Framing: Panel support framing.

B. Section 070543 Cladding Support Systems Panel support.

C. Section 076200 - Sheet Metal Flashing and Trim: Metal flashing components integrated with this wall system.

1.03 REFERENCE STANDARDS

A. ASHRAE Std 90.1 I-P - Energy Standard for Buildings Except Low-Rise Residential Buildings; Most Recent Edition Adopted by Authority Having Jurisdiction, Including All Applicable Amendments and Supplements.

B. ASTM B209/B209M - Standard Specification for Aluminum and Aluminum-Alloy Sheet and Plate; 2021a.

C. ASTM B221 - Standard Specification for Aluminum and Aluminum-Alloy Extruded Bars, Rods, Wire, Profiles, and Tubes; 2021.

D. ASTM B221M - Standard Specification for Aluminum and Aluminum-Alloy Extruded Bars, Rods, Wire, Profiles, and Tubes (Metric); 2021.

E. ASTM D1781 - Standard Test Method for Climbing Drum Peel for Adhesives; 1998 (Reapproved 2021).

F. ASTM D1929 - Standard Test Method for Determining Ignition Temperature of Plastics; 2023.

G. ASTM D4145 - Standard Test Method for Coating Flexibility of Prepainted Sheet; 2010 (Reapproved 2022).

H. ASTM E84 - Standard Test Method for Surface Burning Characteristics of Building Materials; 2023d.

I. ASTM E330/E330M - Standard Test Method for Structural Performance of Exterior Windows, Doors, Skylights and Curtain Walls by Uniform Static Air Pressure Difference; 2014 (Reapproved 2021).

J. NFPA 285 - Standard Fire Test Method for Evaluation of Fire Propagation Characteristics of Exterior Wall Assemblies Containing Combustible Components; 2023.

1.04 ADMINISTRATIVE REQUIREMENTS

A. Pre-Installation Meeting: Convene one week before starting work of this section to verify project requirements, coordinate with installers of other work, establish condition and completeness of building substrate, and review manufacturers' installation instructions and warranty requirements.
   1. Require attendance by the installer and relevant sub-contractors.
   2. Include MCM sheet manufacturer’s representative and wall system manufacturer’s representative to review storage and handling procedures.
   3. Review in detail truck transportation, parking, vertical transportation, schedule, personnel, installation of adjacent materials and substrate.
   4. Review procedures for protection of work and other construction.

1.05 SUBMITTALS

A. See Section 013000 - Administrative Requirements for submittal procedures.

B. Product Data - MCM Sheets: Manufacturer's data sheets on each product to be used, including thickness, physical characteristics, and finish, and:
   1. Finish manufacturer's data sheet showing physical and performance characteristics.
   2. Storage and handling requirements and recommendations.
   3. Fabrication instructions and recommendations.
   4. Specimen warranty for finish, as specified herein.

C. Product Data - Wall System: Manufacturer's data sheets on each product to be used, including:
   1. Physical characteristics of components shown on shop drawings.
   2. Storage and handling requirements and recommendations.
   3. Installation instructions and recommendations.
   4. Specimen warranty for wall system, as specified herein.

D. Shop Drawings: Show layout and elevations, dimensions and thickness of panels, connections, details and location of joints, sealants and gaskets, method of anchorage, support clips, exposed fasteners, number of anchors, supports, reinforcement, trim, flashings, and accessories.
   1. Indicate panel numbering system.
   2. Differentiate between shop and field fabrication.
   3. Indicate substrates and adjacent work with which the wall system must be coordinated.
   4. Include large-scale details of anchorages and connecting elements.
   5. Include large-scale details or schematic, exploded or isometric diagrams to fully explain flashing at a scale of not less than 1-1/2 inches per 12 inches (1:10).
   6. Include design engineer's stamp or seal on shop drawings for attachments and anchors.

E. Selection Samples: For each finish product specified, submit at least three sample color chips representing manufacturer's standard range of available colors and patterns.

F. Design Data: Submit structural calculations stamped by design engineer, for Architect's information and project record.

G. Test Report: Submit report of full-size mock-up tests for air infiltration, water penetration, and wind performance.

H. Test Report: Submit test report verifying compliance with NFPA 285 for previously-tested exterior wall assembly.

I. Manufacturer's Field Reports: Provide within 48 hours of field review. State what was observed and what changes, if any, were requested or required.

J. Installer's qualification statement.

K. Testing agency's qualification statement.

L. Maintenance Data: Care of finishes and warranty requirements.

1.06 QUALITY ASSURANCE

A. Field Measurements: Verify actual dimensions by field measurement before fabrication; show recorded measurements on shop drawings.

B. Design Engineer's Qualifications: Design structural supports and anchorages under direct supervision of a Structural Engineer experienced in design of this type of work and licensed in the State in which the Project is located.

C. Manufacturer Qualifications: Company specializing in manufacturing wall panel systems specified in this section.
   1. With not less than three years of documented experience.
   2. Approved by MCM sheet manufacturer.

D. Installer Qualifications: Company specializing in performing work of type specified in this section.
   1. With minimum three years of documented experience.

E. Testing Agency Qualifications: Independent agency experienced in testing assemblies of the type required for this project and having the necessary facilities for full-size mock-up testing of the type specified.

1.07 MOCK-UPS

A. See Section 014000 - Quality Requirements for additional requirements.

B. Provide a mock-up for evaluation of fabrication workmanship.

C. Provide specified finish on panels.

D. Mock-up may remain as part of work.

1.08 DELIVERY, STORAGE, AND HANDLING

A. See Section 017419 - Construction Waste Management and Disposal for packaging waste requirements.

B. Deliver products in manufacturer's original, unopened, undamaged containers with identification labels intact.
   1. Protect finishes by applying heavy-duty removable plastic film during production.
   2. Package for protection against transportation damage.
   3. Provide markings to identify components consistently with drawings.
   4. Exercise care in unloading, storing, and installing panels to prevent bending, warping, twisting, and surface damage.

C. Store products protected from exposure to harmful weather conditions and at temperature conditions recommended by manufacturer.
   1. Store in well-ventilated space out of direct sunlight.
   2. Protect from moisture and condensation with tarpaulins or other suitable weathertight covering installed to provide ventilation.
   3. Store at a slope to ensure positive drainage of accumulated water.
   4. Do not store in enclosed space where ambient temperature can exceed 120 degrees F (49 degrees C).
   5. Avoid contact with other materials that might cause staining, denting, or other surface damage.

1.09 FIELD CONDITIONS

A. Do not install panels when air temperature or relative humidity are outside manufacturer's limits.

1.10 WARRANTY

A. See Section 017800 - Closeout Submittals for additional warranty requirements.

B. Finish Warranty: Provide 30 year manufacturer warranty against excessive degradation of exterior finish. Include provision for replacement of units with excessive fading, chalking, or flaking. Complete forms in Owner's name and register with warrantor.

PART 2 PRODUCTS

2.01 MANUFACTURERS

A. Metal Composite Material (MCM) Sheet Manufacturers:
   1. ALUCOBOND by 3A Composites USA; ALUCOBOND PLUS: www.alucobondusa.com/#sle.
   2. ALPOLIC Materials; ALPOLIC/fr (Fire Retardant core): www.alpolic-americas.com/#sle.
   3. Substitutions: See Section 016000 - Product Requirements.

B. Wall Panel System Manufacturers:
   1. ACM Panelworx Inc; PX-10 Dry Joint Rain Screen: www.acmpanelworx.com/#sle.
   2. Citadel Architectural Products, Inc; Envelope 2000 Rainscreen (RS) System: www.citadelap.com/#sle.
   3. DAMS Incorporated; CCRS Series: www.damsinc.com/#sle.

4. Petersen Aluminum Corporation; PAC-3000 RS: www.pac-clad.com/#sle.
5. Substitutions: See Section 016000 - Product Requirements.

2.02 WALL PANEL SYSTEM

A. Wall Panel System: Metal panels, fasteners, and anchors designed to be supported by framing or other substrate provided by others; provide installed panel system capable of maintaining specified performance without defects, damage, or failure.
   1. Provide structural design by or under direct supervision of a Structural Engineer licensed in the State in which the Project is located.
   2. Provide panel jointing and weatherseal using a "wet", sealant-sealed system.
   3. Anchor panels to supporting framing without exposed fasteners.

2.03 PERFORMANCE REQUIREMENTS

A. Thermal Movement: Provide for free and noiseless vertical and horizontal thermal movement due to expansion and contraction under material temperature range of minus 20 degrees F (minus 29 degrees C) to 180 degrees F (82 degrees C) without buckling, opening of joints, undue stress on fasteners, or other detrimental effects; allow for ambient temperature at time of fabrication, assembly, and erection procedures.
   1. Wind Performance: Provide system tested in accordance with ASTM E330/E330M without permanent deformation or failures of structural members under the following conditions:
   2. Design Wind Pressure: In accordance with local building code.
   3. Maximum deflection of perimeter framing member of L/175 normal to plane of the wall; maximum deflection of individual panels of L/60.
   4. Maximum anchor deflection in any direction of 1/16 inch (1.6 mm) at connection points of framing members to anchors.

B. Fire Performance: Use test method complying with NFPA 285.

C. Building Envelope Performance: Comply with ASHRAE Std 90.1 I-P when tested as part of building envelope assembly.

2.04 PANELS

A. Panels: 1 inch (25.4 mm) deep pans formed of metal composite material sheet by routing back edges of sheet, removing corners, and folding edges.
   1. Reinforce corners with riveted aluminum angles.
   2. Provide concealed attachment to supporting structure by adhering attachment members to back of panel; attachment members may also function as stiffeners.
   3. Maintain maximum panel bow of 0.8 percent of panel dimension in width and length; provide stiffeners of sufficient size and strength to maintain panel flatness without showing local stresses or read-through on panel face.
   4. Secure members to back face of panels using structural silicone sealant approved by MCM sheet manufacturer.
   5. Fabricate panels under controlled shop conditions.
   6. Where final dimensions cannot be established by field measurement before commencement of manufacturing, make allowance for field adjustments without requiring field fabrication of panels.
   7. Fabricate as indicated on drawings and as recommended by MCM sheet manufacturer.
      a. Make panel lines, breaks, curves, and angles sharp and true.
      b. Keep plane surfaces free from warp or buckle.
      c. Keep panel surfaces free of scratches or marks caused during fabrication.
   8. Provide joint details providing a watertight and structurally sound wall panel system that allows no uncontrolled water penetration on inside face of panel system.
   9. For "dry" jointing, secure extrusions to returned pan edges with stainless steel rivets; provide means of concealed drainage with baffles and weeps for water that might accumulate in members of system.

2.05 MATERIALS

A. Metal Composite Material (MCM) Sheet: Two sheets of aluminum sandwiching a core of extruded thermoplastic material; no foamed insulation material content.
   1. Overall Sheet Thickness: 0.118 inch (3 mm), minimum.
   2. Face Sheet Thickness: 0.019 inch (0.50 mm), minimum.
   3. Alloy: Manufacturer's standard, selected for best appearance and finish durability.
   4. Bond and Peel Strength: No adhesive failure of the bond between the core and the skin nor cohesive failure of the core itself below 22.4 inch-pound/inch (100 N-mm/mm) with no degradation in bond performance, when tested in accordance with ASTM D1781, simulating resistance to panel delamination, after 8 hours of submersion in boiling water and after 21 days of immersion in water at 70 degrees F (21 degrees C).
   5. Surface Burning Characteristics: Flame spread index of 25, maximum; smoke developed index of 450, maximum; when tested in accordance with ASTM E84.
   6. Flammability: Self-ignition temperature of 650 degrees F (343 degrees C) or greater when tested in accordance with ASTM D1929.

B. Metal Framing Members: Include sub-girts, zee-clips, base and sill angles and channels, hat-shaped and rigid channels, and furring channels required for complete installation.
   1. Provide material strength, dimensions, configuration as required to meet applied loads and in compliance with applicable building code.
   2. Aluminum Components: ASTM B209/B209M; or ASTM B221 (ASTM B221M).
   3. Panel Support Framing: See Section 054000.

2.06 FINISHES

A. Factory Finish: Two coat fluoropolymer resin coating, approved by coating manufacturer for length of warranty specified for project, and applied by coil manufacturing facility that specializes in coil applied finishes.
   1. Coating Flexibility: Pass ASTM D4145 minimum 1T Bend at time of manufacturing.
   2. Long-Term Performance: Not less than that specified under WARRANTY in PART 1.

B. Color/Texture: As selected by Architect from manufacturer's standard range.

2.07 ACCESSORIES

A. Flashing: Sheet aluminum; 0.040 inch (1.0 mm) thick, minimum; finish and color to match MCM sheet; see Section 076200 for additional requirements.

B. Provide panel system manufacturer's and installer’s standard corrosion resistant accessories, including fasteners, clips, anchorage devices, and attachments.

PART 3 EXECUTION

3.01 EXAMINATION

A. Examine dimensions, tolerances, and interfaces with other work.

B. Examine substrate on-site to determine that conditions are acceptable for product installation in accordance with manufacturer's written instructions.

C. If substrate preparation is the responsibility of another installer, notify Architect of unsatisfactory preparation before proceeding.

D. Notify Architect in writing of conditions detrimental to proper and timely completion of work, and do not proceed with erection until unsatisfactory conditions have been corrected.

3.02 PREPARATION

A. Protect adjacent work areas and finish surfaces from damage during installation.

3.03 INSTALLATION

A. Do not install products that are defective, including warped, bowed, dented, and broken members, and members with damaged finishes.

B. Comply with instructions and recommendations of MCM sheet manufacturer and wall system manufacturer, as well as with approved shop drawings.

C. Install wall system securely allowing for necessary thermal and structural movement; comply with wall system manufacturer's instructions for installation of concealed fasteners.

D. Do not handle or tool products during erection in manner that damages finish, decreases strength, or results in visual imperfection or failure in performance. Return component parts that require alteration to shop for refabrication, if possible, or for replacement with new parts.

E. Do not form panels in field unless required by wall system manufacturer and approved by the Architect; comply with MCM sheet manufacturer's instructions and recommendations for field forming.

F. Separate dissimilar metals; use gasket fasteners, isolation shims, or isolation tape where needed to eliminate possibility of electrolytic action between metals.

G. Where joints are designed for field-applied sealant, seal joints completely with specified sealant.

H. Install flashings as indicated on shop drawings. At flashing butt joints, provide a lap strap under flashing and seal lapped surfaces with a full bed of non-hardening sealant.

I. Install square, plumb, straight, and true, accurately fitted, with tight joints and intersections maintaining the following installation tolerances:
   1. Variation From Plane or Location: 1/2 inch in 30 feet (10 mm in 10 m) of length and up to 3/4 inch in 300 feet (20 mm in 100 m), maximum.
   2. Deviation of Vertical Member From True Line: 0.1 inch in 25 feet (3 mm in 9 m) run, maximum.
   3. Deviation of Horizontal Member From True Line: 0.1 inch in 25 feet (3 mm in 9 m) run, maximum.
   4. Offset From True Alignment Between Two Adjacent Members Abutting End To End, In Line: 0.03 inch (0.75 mm), maximum.

J. Replace damaged products.
   1. Field Repairs to Finishes: Using materials and methods sufficient that repairs are not discernible when viewed at distance of 10 feet (3 m) under all typical light conditions experienced at the project.

3.04 FIELD QUALITY CONTROL

A. See Section 014000 - Quality Requirements for additional requirements.

B. Wall System Manufacturer's Field Services: Provide field services consisting of product use recommendations and periodic site visits for inspection of product installation in accordance with instructions.

3.05 CLEANING

A. Ensure weep holes and drainage channels are unobstructed and free of dirt and sealants.

B. Remove protective film after installation of joint sealers, after cleaning of adjacent materials, and immediately prior to completion of work.

C. Remove temporary coverings and protection of adjacent work areas.

D. Clean installed products in accordance with manufacturer's instructions.

3.06 PROTECTION

A. Protect installed panel system from damage until Date of Substantial Completion.

END OF SECTION 074213.23

SECTION 075400
THERMOPLASTIC MEMBRANE ROOFING

PART 1 GENERAL

1.01 SECTION INCLUDES

A. Adhered system with thermoplastic roofing membrane.

B. Insulation, flat and tapered.

C. Cover boards.

D. Flashings.

E. Roofing stack boots and walkway pads.

1.02 RELATED REQUIREMENTS

A. Section 053100 - Steel Decking: Placement of acoustical insulation for deck flutes.

B. Section ?????? Snow Melt systems.

1.03 REFERENCE STANDARDS

A. ASCE 7 - Minimum Design Loads and Associated Criteria for Buildings and Other Structures; Most Recent Edition Cited by Referring Code or Reference Standard.

B. ASTM C177 - Standard Test Method for Steady-State Heat Flux Measurements and Thermal Transmission Properties by Means of the Guarded-Hot-Plate Apparatus; 2019, with Editorial Revision (2023).

C. ASTM C1177/C1177M - Standard Specification for Glass Mat Gypsum Substrate for Use as Sheathing; 2017.

D. ASTM C1289 - Standard Specification for Faced Rigid Cellular Polyisocyanurate Thermal Insulation Board; 2023a.

E. ASTM D6878/D6878M - Standard Specification for Thermoplastic Polyolefin-Based Sheet Roofing; 2021.

F. ASTM E96/E96M - Standard Test Methods for Gravimetric Determination of Water Vapor Transmission Rate of Materials; 2023.

G. ASTM E1980 - Standard Practice for Calculating Solar Reflectance Index of Horizontal and Low-Sloped Opaque Surfaces; 2011 (Reapproved 2019).

H. FM (AG) - FM Approval Guide; Current Edition.

I. FM DS 1-28 - Wind Design; 2015, with Editorial Revision (2024).

J. NRCA (RM) - The NRCA Roofing Manual; 2024.

K. NRCA (WM) - The NRCA Waterproofing Manual; 2021.

L. UL (FRD) - Fire Resistance Directory; Current Edition.

1.04 ADMINISTRATIVE REQUIREMENTS

A. Preinstallation Meeting: Convene one week before starting work of this section.
   1. Review preparation and installation procedures and coordinating and scheduling required with related work.

1.05 SUBMITTALS

A. See Section 013000 - Administrative Requirements for submittal procedures.

B. Product Data: Provide data indicating membrane materials, flashing materials, insulation, vapor retarder, surfacing, and fasteners.

C. Shop Drawings: Submit drawings that indicate joint or termination detail conditions, conditions of interface with other materials, setting plan for tapered insulation, and Roof plan of additional required termination bars for uplift..

D. Manufacturer's Installation Instructions: Indicate membrane seaming precautions and perimeter conditions requiring special attention.

E. Manufacturer's Field Reports: Indicate procedures followed, ambient temperatures, humidity, wind velocity during application, and supplementary instructions given.

F. Manufacturer's qualification statement.

G. Installer's qualification statement.

H. Specimen Warranty: For approval.

I. Warranty Documentation:
   1. Submit manufacturer warranty and ensure that forms have been completed in Owner's name and registered with manufacturer.
   2. Submit installer's written verification that installation complies with warranty conditions for waterproof membrane.

1.06 QUALITY ASSURANCE

A. Manufacturer Qualifications: Company specializing in manufacturing products specified in this section with minimum three years of documented experience.

B. Installer Qualifications: Company specializing in performing work of this section with at least three years of documented experience.

1.07 DELIVERY, STORAGE, AND HANDLING

A. See Section 017419 - Construction Waste Management and Disposal for packaging waste requirements.

B. Deliver materials in manufacturer's original containers, dry and undamaged, with seals and labels intact, unless otherwise indicated.

C. Store materials in weather protected environment, clear of ground and moisture.

D. Ensure storage and staging of materials does not exceed static and dynamic load-bearing capacities of roof decking.

E. Protect foam insulation from direct exposure to sunlight.

1.08 FIELD CONDITIONS

A. Do not apply roofing membrane during unsuitable weather.

B. Do not apply roofing membrane when ambient temperature is below 40 degrees F (5 degrees C) or above manufacturer's recommended abient temperature.

C. Do not apply roofing membrane to damp or frozen deck surface or when precipitation is expected or occurring.

D. Do not expose materials vulnerable to water or sun damage in quantities greater than can be weatherproofed the same day.

E. Schedule applications so that no partially completed sections of roof are left exposed at end of workday.

1.09 WARRANTY

A. See Section 017800 - Closeout Submittals for additional warranty requirements.

B. System Warranty: Provide manufacturer's system warranty agreeing to repair or replace roofing that leaks or is damaged due to wind or other natural causes.
   1. Warranty Term: 20 years.
   2. For repair and replacement include costs of both material and labor in warranty.
   3. Exceptions are not Permitted:

PART 2 PRODUCTS

2.01 MANUFACTURERS

A. Thermoplastic Polyolefin (TPO) Membrane Roofing Materials:
   1. Carlisle SynTec Systems: www.carlisle-syntec.com/#sle.
   2. GenFlex Roofing Systems, LLC: www.genflex.com/#sle.
   3. Mule-Hide Products Co, Inc: www.mulehide.com/#sle.
   4. Versico Roofing Systems: www.versico.com/#sle.
   5. Substitutions: See Section 016000 - Product Requirements.

B. Insulation:
   1. BASF Corporation; BASF Neopor GPS: www.neopor.basf.us/#sle.
   2. Carlisle SynTec Systems: www.carlisle-syntec.com/#sle.
   3. GAF: www.gaf.com/#sle.
   4. Owens Corning Corporation: www.ocbuildingspec.com/#sle.
   5. Versico Roofing Systems: www.versico.com/#sle.
   6. Substitutions: See Section 016000 - Product Requirements.

2.02 ROOFING - UNBALLASTED APPLICATIONS

A. Thermoplastic Membrane Roofing: One ply membrane, fully adhered, over insulation.

B. Roofing Assembly Requirements:
   1. Solar Reflectance Index (SRI): Minimum of 64 based on three-year aged value; if three-year aged data is not available, minimum of 82 initial value.
      a. Calculate SRI in accordance with ASTM E1980.
      b. Field applied coating may not be used to achieve specified SRI.
   2. Roof Covering External Fire Resistance Classification: UL (FRD) Class A.
   3. Factory Mutual Classification: Class 1 and windstorm resistance of 1-90, in accordance with FM DS 1-28.

C. Acceptable Insulation Types - Constant Thickness Application: Any type that meets requirements and is approved by membrane manufacturer for application.
   1. Minimum 2 layers of polyisocyanurate board.

D. Acceptable Insulation Types - Tapered Application:
   1. Tapered polyisocyanurate board.

2.03 MEMBRANE ROOFING AND ASSOCIATED MATERIALS

A. Membrane Roofing Materials:
   1. TPO: Thermoplastic polyolefin (TPO) complying with ASTM D6878/D6878M, sheet contains reinforcing fabrics or scrims.
      a. Thickness: 60 mil, 0.060 inch (1.5 mm), minimum.
   2. Sheet Width:
      a. Adhered Application: Limit width to 120 inches (3,048 mm), maximum, when ambient temperatures are less than 40 degrees F (4.4 degress C) for extended period of time during installation.
   3. Color: As selected by Architect from manufacturer's full color range.

B. Seaming Materials: As recommended by membrane manufacturer.

C. Flexible Flashing Material: Same material as membrane.

2.04 COVER BOARDS

A. Cover Boards: Glass-mat faced gypsum panels complying with ASTM C1177/C1177M.
   1. Thickness: 1/2 inch (12.7 mm), fire-resistant.
   2. Products:
      a. As recommended by roofing manufacturer
      b. Substitutions: See Section 016000 - Product Requirements.

2.05 INSULATION

A. Polyisocyanurate (ISO) Board Insulation: Rigid cellular foam, complying with ASTM C1289.
   1. Classifications:
      a. Type II: Faced with either cellulosic facers or glass fiber mat facers on both major surfaces of the core foam.
         1) Class 1 - Faced with glass fiber reinforced cellulosic facers on both major surfaces of the core foam.
         2) Compressive Strength: Classes 1-2-3, Grade 1, 16 psi (110 kPa), minimum.
         3) Thermal Resistance, R-value (RSI-value): At 1-1/2 inches (38 mm) thick; Class 1, Grades 1-2-3, 8.4 (1.48), minimum, at 75 degrees F (24 degrees C).
   2. Board Size: 48 by 96 inches (1220 by 2440 mm).
   3. Board Thickness: 2.5 inches (64 mm).
   4. Tapered Board: Slope as indicated; minimum thickness 1/4 inch (7 mm); fabricate of fewest layers possible.
   5. Board Edges: Square.
   6. Products:
      a. As recommended by roofing manufacturer.

2.06 ACCESSORIES

A. Stack Boots: Prefabricated flexible boot and collar for pipe stacks through membrane; same material as membrane.

B. Insulation Joint Tape: Glass fiber reinforced type as recommended by insulation manufacturer, compatible with roofing materials; 6 inches (152 mm) wide; self adhering.

C. Insulation Fasteners: Appropriate for purpose intended and approved by roofing manufacturer.
   1. Length as required for thickness of insulation material and penetration of deck substrate, with metal washers.

D. Membrane Adhesive: As recommended by membrane manufacturer.

E. Surface Conditioner for Adhesives: Compatible with membrane and adhesives.

F. Thinners and Cleaners: As recommended by adhesive manufacturer, compatible with membrane.

G. Insulation Adhesive: As recommended by insulation manufacturer.

H. Strip Reglet Devices: Galvanized steel, maximum possible lengths per location, with attachment flanges.

I. Sealants: As recommended by membrane manufacturer.

J. Walkway Protection
   1. Open Grid Mat: 5/8 inch (15.8 mm) thick, rolled-out, open grid walkway mat of flexible PVC used to protect roof membrane from regular foot traffic.
      a. Color: Gray.
      b. Width: 33 inches (0.838 m), nominal.
      c. Crossgrip XTRA

PART 3 EXECUTION

3.01 EXAMINATION

A. Verify that surfaces and site conditions are ready to receive work.

B. Verify deck is supported and secure.

C. Verify deck is clean and smooth, flat, free of depressions, waves, or projections, properly sloped and suitable for installation of roof system.

D. Verify deck surfaces are dry and free of snow or ice.

E. Verify that roof openings, curbs, and penetrations through roof are solidly set, and cant strips are in place.

3.02 PREPARATION - METAL DECK

3.03 INSTALLATION, GENERAL

A. Perform work in accordance with manufacturer's instructions, NRCA (RM), and NRCA (WM) applicable requirements.

B. Do not apply roofing membrane during cold or wet weather conditions.

C. Do not apply roofing membrane when ambient temperature is outside the temperature range recommended by manufacturer.

D. Do not apply roofing membrane to damp or frozen deck surface or when precipitation is expected or occurring.

3.04 FIELD QUALITY CONTROL

A. Do not expose materials vulnerable to water or sun damage in quantities greater than can be weatherproofed the same day.

3.05 INSTALLATION - INSULATION, UNDER MEMBRANE

A. Attachment of Insulation:
   1. Mechanically fasten insulation to deck in accordance with roofing manufacturer's instructions and FM DS 1-28 Factory Mutual requirements.

B. Cover Boards: Mechanically fasten cover boards in accordance with roofing manufacturer's instructions and FM (AG) Factory Mutual requirements.

C. Lay subsequent layers of insulation with joints staggered minimum 6 inches (152 mm) from joints of preceding layer.

D. Place tapered insulation to the required slope pattern in accordance with manufacturer's instructions.

E. On metal deck, place boards parallel to flutes with insulation board edges bearing on deck flutes.

F. Lay boards with edges in moderate contact without forcing. Cut insulation to fit neatly to perimeter blocking and around penetrations through roof.

G. Tape joints of insulation in accordance with roofing and insulation manufacturers' instructions.

H. Do not install more insulation than can be covered with membrane in same day.

3.06 INSTALLATION - MEMBRANE

A. Roll out membrane, free from wrinkles or tears. Place sheet into place without stretching.

B. Shingle joints on sloped substrate in direction of drainage.

C. Fully Adhered Application: Apply adhesive to substrate at rate specified by roofing manufacturer. Fully embed membrane in adhesive except in areas directly over or within 3 inches (76 mm) of expansion joints. Fully adhere one roll before proceeding to adjacent rolls.

D. Overlap edges and ends and seal seams by contact adhesive, minimum 3 inches (76 mm). Seal permanently waterproof. Apply uniform bead of sealant to joint edge.

E. At intersections with vertical surfaces:
   1. Extend membrane over cant strips and up a minimum of 6 inches (154 mm) onto vertical surfaces.
   2. Fully adhere flexible flashing over membrane and up to reglets.

F. Around roof penetrations, seal flanges and flashings with flexible flashing.

G. Coordinate installation of roof drains and sumps and related flashings.

3.07 FIELD QUALITY CONTROL

A. See Section 014000 - Quality Requirements for additional requirements.

B. Owner will provide testing services, and Contractor to provide temporary construction and materials for testing in accordance with requirements.

C. Provide daily on-site attendance of roofing and insulation manufacturer's representative during installation of this work.

3.08 CLEANING

A. See Section 017000 - Execution and Closeout Requirements for additional requirements.

B. Remove bituminous markings from finished surfaces.

C. In areas where finished surfaces are soiled by work of this section, consult manufacturer of surfaces for cleaning advice and comply with their documented instructions.

D. Repair or replace defaced or damaged finishes caused by work of this section.

3.09 PROTECTION

A. Protect installed roofing and flashings from construction operations.

B. Where traffic must continue over finished roof membrane, protect surfaces using durable materials.

END OF SECTION 075400

SECTION 076200
SHEET METAL FLASHING AND TRIM

PART 1 GENERAL

1.01 SECTION INCLUDES

A. Fabricated sheet metal items, including flashings, counterflashings, exterior penetrations, and other items indicated in Schedule.

B. Sealants for joints within sheet metal fabrications.

1.02 REFERENCE STANDARDS

A. AAMA 2605 - Voluntary Specification, Performance Requirements and Test Procedures for Superior Performing Organic Coatings on Aluminum Extrusions and Panels (with Coil Coating Appendix); 2022.

B. ASTM A653/A653M - Standard Specification for Steel Sheet, Zinc-Coated (Galvanized) or Zinc-Iron Alloy-Coated (Galvannealed) by the Hot-Dip Process; 2023.

C. ASTM A666 - Standard Specification for Annealed or Cold-Worked Austenitic Stainless Steel Sheet, Strip, Plate, and Flat Bar; 2023.

D. ASTM C920 - Standard Specification for Elastomeric Joint Sealants; 2018.

E. SMACNA (ASMM) - Architectural Sheet Metal Manual; 2012.

1.03 SUBMITTALS

A. See Section 013000 - Administrative Requirements for submittal procedures.

B. Shop Drawings: Indicate material profile, jointing pattern, jointing details, fastening methods, flashings, terminations, and installation details.

C. Samples: Submit two samples, 6 by 6 inches (152.4 by 152.4 mm) in size, illustrating metal finish color.

1.04 QUALITY ASSURANCE

A. Perform work in accordance with SMACNA (ASMM) and CDA A4050 requirements and standard details, except as otherwise indicated.

1.05 DELIVERY, STORAGE, AND HANDLING

A. See Section 017419 - Construction Waste Management and Disposal for packaging waste requirements.

B. Stack material to prevent twisting, bending, and abrasion, and to provide ventilation. Slope metal sheets to ensure drainage.

C. Prevent contact with materials that could cause discoloration or staining.

PART 2 PRODUCTS

2.01 MANUFACTURERS

A. Sheet Metal Flashing and Trim:
   1. ALUCOBOND by 3A Composites USA: www.alucobondusa.com/#sle.
   2. Fairview Architectural LLC: www.fairview-na.com/#sle.
   3. Hickman Edge Systems: www.hickmanedgesystems.com/#sle.
   4. Tamlyn: www.tamlyn.com/#sle.
   5. Taylor Metal Products: www.taylormetal.com/#sle.
   6. Substitutions: See Section 016000 - Product Requirements.

2.02 SHEET MATERIALS

A. Pre-Finished Galvanized Steel: ASTM A653/A653M, with G90/Z275 zinc coating; minimum 24-gauge, 0.0239-inch (0.61 mm) thick base metal, shop pre-coated with PVDF coating.
   1. Polyvinylidene Fluoride (PVDF) Coating: Superior performing organic powder coating, AAMA 2605; multiple coat, thermally cured fluoropolymer finish system.

2. Color: As selected by Architect from manufacturer's standard colors.

B. Stainless Steel: ASTM A666, Type 304 alloy, soft temper, 28 gauge, 0.0156 inch (0.40 mm) thick; smooth No. 4 - Brushed finish.

2.03 FABRICATION

A. Form sections true to shape, accurate in size, square, and free from distortion or defects.

B. Form pieces in longest possible lengths.

C. Hem exposed edges on underside 1/2 inch (13 mm); miter and seam corners.

D. Form material with flat lock seams, except where otherwise indicated; at moving joints, use sealed lapped, bayonet-type or interlocking hooked seams.

E. Fabricate corners from one piece with minimum 18-inch (450 mm) long legs; seam for rigidity, seal with sealant.

F. Fabricate flashings to allow toe to extend 2 inches (50 mm) over roofing gravel. Return and brake edges.

2.04 FLASHING

A. Flashing Panels for Exterior Wall Penetrations: Premanufactured components and accessories as required to preserve integrity of building envelope; suitable for conduits and facade materials to be installed.

2.05 ACCESSORIES

A. Fasteners: Galvanized steel, with soft neoprene washers.

B. Underlayment: Polyethylene, 6 mil, 0.006 inch (0.15 mm) thick.

C. Primer Type: Zinc chromate.

D. Concealed Sealants: Non-curing butyl sealant.

E. Exposed Sealants: ASTM C920; elastomeric sealant, with minimum movement capability as recommended by manufacturer for substrates to be sealed; color to match adjacent material.

F. Fenestration Perimeter Flashing Attachments: Two-piece flashing receiver and clip of extruded aluminum, at least 0.045 inch (1.14 mm) thick, for attaching flashing at perimeter of exterior wall fenestration openings.

1. Provide flashing receiver profile appropriate for flashing applications.

PART 3 EXECUTION

3.01 EXAMINATION

A. Verify roof openings, curbs, pipes, sleeves, ducts, and vents through roof are solidly set, reglets in place, and nailing strips located.

B. Verify roofing termination and base flashings are in place, sealed, and secure.

3.02 PREPARATION

A. Install starter and edge strips, and cleats before starting installation.

B. Back paint concealed metal surfaces with protective backing paint to a minimum dry film thickness of 15 mil, 0.015 inch (0.38 mm).

3.03 INSTALLATION

A. Secure flashings in place using concealed fasteners, and use exposed fasteners only where permitted..

B. Apply plastic cement compound between metal flashings and felt flashings.

C. Fit flashings tight in place; make corners square, surfaces true and straight in planes, and lines accurate to profiles.

D. Exterior Flashing Receivers: Install in accordance with manufacturer's recommendations, and in proper relationship with adjacent construction, and as follows:

E. Seal metal joints watertight.

3.04 FIELD QUALITY CONTROL

A. See Section 014000 - Quality Requirements for field inspection requirements.

B. Inspection will involve surveillance of work during installation to ascertain compliance with specified requirements.

3.05 SCHEDULE

A. Through-Wall Flashing in Masonry:

B. Scuppers:

C. Coping, Cap, Parapet, Sill and Ledge Flashings:

D. Counterflashings at Roofing Terminations (over roofing base flashings):

E. Counterflashings at Curb-Mounted Roof Items, including skylights and roof hatches:

F. Snow Guards:

END OF SECTION 076200

This page intentionally left blank

SECTION 077200
ROOF ACCESSORIES

PART 1 GENERAL

1.01 SECTION INCLUDES

A. Snow guards.

1.02 RELATED REQUIREMENTS

A. Section 077100 - Roof Specialties: Other manufactured roof specialty items.

1.03 REFERENCE STANDARDS

A. 29 CFR 1910.29 - Fall Protection Systems and Falling Object Protection - Criteria and Practices; Current Edition.

B. 29 CFR 1926.502 - Fall protection systems criteria and practices; Current Edition.

C. ASTM A153/A153M - Standard Specification for Zinc Coating (Hot-Dip) on Iron and Steel Hardware; 2023.

D. ASTM A653/A653M - Standard Specification for Steel Sheet, Zinc-Coated (Galvanized) or Zinc-Iron Alloy-Coated (Galvannealed) by the Hot-Dip Process; 2023.

E. ASTM B221M - Standard Specification for Aluminum and Aluminum-Alloy Extruded Bars, Rods, Wire, Profiles, and Tubes (Metric); 2021.

F. FM (AG) - FM Approval Guide; Current Edition.

1.04 SUBMITTALS

A. See Section 013000 - Administrative Requirements for submittal procedures.

B. Product Data: Manufacturer's data sheets on each product to be used.
   1. Preparation instructions and recommendations.
   2. Storage and handling requirements and recommendations.
   3. Installation methods.
   4. Maintenance requirements.

C. Warranty Documentation:
   1. Submit manufacturer warranty.
   2. Ensure that forms have been completed in Owner's name and registered with manufacturer.

1.05 DELIVERY, STORAGE, AND HANDLING

A. Store products in manufacturer's unopened packaging until ready for installation.

B. Store products under cover and elevated above grade.

1.06 WARRANTY

A. See Section 017800 - Closeout Submittals for additional warranty requirements.

B. Manufacturer Warranty: Provide 2-year manufacturer warranty for Roof Hatch. Complete forms in Owner's name and register with manufacturer.

PART 2 PRODUCTS

2.01 SNOW GUARDS

A. Unit Snow Guards: Individual projecting polycarbonate shapes, set between roofing shingles/tiles, and mechanically fastened to roof deck.
   1. Projecting Polycarbonate Shapes: Clear polycarbonate plastic with UV stabilizers, semi-circular design.

B. Roof Membrane Fence Type Snow Guards: Base plate attached on top of EPDM, TPO, or PVC roof membrane and anchored to roof deck with mounting bracket that supports flat-faced bar or single tube snow guard.

1. Base Plate: Stainless steel plate with holes for mounting with anchor bolts through membrane to roof deck.
2. Bracket: Aluminum mounting bracket bolted to base plate.

C. Fence Type Snow Guard: Continuous snow guard; manufacturer's standard pipe, bar, channel, or solid rod, set in brackets or posts, with optional plates and metal trim to match roof.
1. Brackets: Aluminum.
2. Pipe or Square Tube: Mill finish.
   a. Outside Diameter, Round: 1 inch (25.4 mm), nominal.
   b. Sleeve Couplings: Manufacturer's standard material.
   c. End Collars and Caps: Metal to match tube.
3. Clamps for Standing Seam Roof: Aluminum clamps attached to standing seams of roof panels; for attachment of fence type snow guard.
   a. Seam Profile: Selected by Architect from manufacturer's standard range; match profile of metal roof.
   b. Finish: Mill finish.
4. Products:
   a. Alpine SnowGuards; ASG4025-AL Standing Seam Two-Pipe Snow Guard: www.alpinesnowguards.com/#sle.
   b. Substitutions: See Section 016000 - Product Requirements.

PART 3 EXECUTION

3.01 EXAMINATION

A. Do not begin installation until substrates have been properly prepared.

B. If substrate preparation is the responsibility of another installer, notify Architect of unsatisfactory preparation before proceeding.

3.02 PREPARATION

A. Clean surfaces thoroughly prior to installation.

B. Prepare surfaces using methods recommended by manufacturer for achieving acceptable results for applicable substrate under project conditions.

3.03 INSTALLATION

A. Install in accordance with manufacturer's instructions, in manner that maintains roofing system weather-tight integrity.

3.04 CLEANING

A. Clean installed work to like-new condition.

3.05 PROTECTION

A. Protect installed products until completion of project.

B. Touch-up, repair or replace damaged products before Date of Substantial Completion.

END OF SECTION 077200

SECTION 079200
JOINT SEALANTS

PART 1 GENERAL

1.01 RELATED DOCUMENTS

A. Drawings and general provisions of the Contract, including General and Supplementary Conditions and Division 01 Specification Sections, apply to this Section.

1.02 SUMMARY

A. Section Includes:
   1. Silicone joint sealants.
   2. Nonstaining silicone joint sealants.
   3. Urethane joint sealants.

B. Related Requirements:
   1. Section 079219 "Acoustical Joint Sealants" for sealing joints in sound-rated construction.
   2. Section 321373 "Concrete Paving Joint Sealants" for sealing joints in paved roads, parking lots, walkways, and curbing.

1.03 ACTION SUBMITTALS

A. Product Data: For each joint-sealant product.

B. Samples for Initial Selection: Manufacturer's color charts consisting of strips of cured sealants showing the full range of colors available for each product exposed to view.

C. Samples for Verification: For each kind and color of joint sealant required, provide Samples with joint sealants in 1/2-inch- (13-mm-) wide joints formed between two 6-inch- (150-mm-) long strips of material matching the appearance of exposed surfaces adjacent to joint sealants.

D. Joint-Sealant Schedule: Include the following information:
   1. Joint-sealant application, joint location, and designation.
   2. Joint-sealant manufacturer and product name.
   3. Joint-sealant formulation.
   4. Joint-sealant color.

1.04 INFORMATIONAL SUBMITTALS

A. Qualification Data: For qualified testing agency.

B. Product Test Reports: For each kind of joint sealant, for tests performed by manufacturer and witnessed by a qualified testing agency.

C. Preconstruction Laboratory Test Schedule: Include the following information for each joint sealant and substrate material to be tested:
   1. Joint-sealant location and designation.
   2. Manufacturer and product name.
   3. Type of substrate material.
   4. Proposed test.
   5. Number of samples required.

D. Preconstruction Laboratory Test Reports: From sealant manufacturer, indicating the following:
   1. Materials forming joint substrates and joint-sealant backings have been tested for compatibility and adhesion with joint sealants.
   2. Interpretation of test results and written recommendations for primers and substrate preparation are needed for adhesion.

E. Preconstruction Field-Adhesion-Test Reports: Indicate which sealants and joint preparation methods resulted in optimum adhesion to joint substrates based on testing specified in "Preconstruction Testing" Article.

F. Field-Adhesion-Test Reports: For each sealant application tested.

G. Sample Warranties: For special warranties.

1.05 QUALITY ASSURANCE

A. Installer Qualifications: An authorized representative who is trained and approved by manufacturer.

B. Product Testing: Test joint sealants using a qualified testing agency.
   1. Testing Agency Qualifications: Qualified according to ASTM C 1021 to conduct the testing indicated.

C. Mockups: Install sealant in mockups of assemblies specified in other Sections that are indicated to receive joint sealants specified in this Section. Use materials and installation methods specified in this Section.

1.06 PRECONSTRUCTION TESTING

A. Preconstruction Laboratory Testing: Submit to joint-sealant manufacturers, for testing indicated below, samples of materials that will contact or affect joint sealants.
   1. Adhesion Testing: Use ASTM C 794 to determine whether priming and other specific joint preparation techniques are required to obtain rapid, optimum adhesion of joint sealants to joint substrates.
   2. Compatibility Testing: Use ASTM C 1087 to determine sealant compatibility when in contact with glazing and gasket materials.
   3. Stain Testing: Use ASTM C 1248 to determine stain potential of sealant when in contact with masonry substrates.
   4. Submit manufacturer's recommended number of pieces of each type of material, including joint substrates, joint-sealant backings, and miscellaneous materials.
   5. Schedule sufficient time for testing and analyzing results to prevent delaying the Work.
   6. For materials failing tests, obtain joint-sealant manufacturer's written instructions for corrective measures, including use of specially formulated primers.
   7. Testing will not be required if joint-sealant manufacturers submit data that are based on previous testing, not older than 24 months, of sealant products for adhesion to, staining of, and compatibility with joint substrates and other materials matching those submitted.

B. Preconstruction Field-Adhesion Testing: Before installing sealants, field test their adhesion to Project joint substrates as follows:
   1. Locate test joints where indicated on Project or, if not indicated, as directed by Architect.
   2. Conduct field tests for each kind of sealant and joint substrate.
   3. Notify Architect seven days in advance of dates and times when test joints will be erected.
   4. Arrange for tests to take place with joint-sealant manufacturer's technical representative present.
      a. Test Method: Test joint sealants according to Method A, Field-Applied Sealant Joint Hand Pull Tab, in Appendix X1.1 in ASTM C 1193 or Method A, Tail Procedure, in ASTM C 1521.
         1) For joints with dissimilar substrates, verify adhesion to each substrate separately; extend cut along one side, verifying adhesion to opposite side. Repeat procedure for opposite side.
   5. Report whether sealant failed to adhere to joint substrates or tore cohesively. Include data on pull distance used to test each kind of product and joint substrate. For sealants that fail adhesively, retest until satisfactory adhesion is obtained.
   6. Evaluation of Preconstruction Field-Adhesion-Test Results: Sealants not evidencing adhesive failure from testing, in absence of other indications of noncompliance with requirements, will be considered satisfactory. Do not use sealants that fail to adhere to joint substrates during testing.

1.07 FIELD CONDITIONS

A. Do not proceed with installation of joint sealants under the following conditions:

1. When ambient and substrate temperature conditions are outside limits permitted by joint-sealant manufacturer or are below 40 deg F (5 deg C).
2. When joint substrates are wet.
3. Where joint widths are less than those allowed by joint-sealant manufacturer for applications indicated.
4. Where contaminants capable of interfering with adhesion have not yet been removed from joint substrates.

1.08 WARRANTY

A. Special Installer's Warranty: Installer agrees to repair or replace joint sealants that do not comply with performance and other requirements specified in this Section within specified warranty period.
   1. Warranty Period: Two years from date of Substantial Completion.

B. Special Manufacturer's Warranty: Manufacturer agrees to furnish joint sealants to repair or replace those joint sealants that do not comply with performance and other requirements specified in this Section within specified warranty period.
   1. Warranty Period: Twenty years from date of Substantial Completion.

C. Special warranties specified in this article exclude deterioration or failure of joint sealants from the following:
   1. Movement of the structure caused by stresses on the sealant exceeding sealant manufacturer's written specifications for sealant elongation and compression.
   2. Disintegration of joint substrates from causes exceeding design specifications.
   3. Mechanical damage caused by individuals, tools, or other outside agents.
   4. Changes in sealant appearance caused by accumulation of dirt or other atmospheric contaminants.

PART 2 PRODUCTS

2.01 JOINT SEALANTS, GENERAL

A. Compatibility: Provide joint sealants, backings, and other related materials that are compatible with one another and with joint substrates under conditions of service and application, as demonstrated by joint-sealant manufacturer, based on testing and field experience.

B. Colors of Exposed Joint Sealants: As selected by Architect from manufacturer's full range.

2.02 SILICONE JOINT SEALANTS

A. Silicone, S, NS, 100/50, T, NT: Single-component, nonsag, plus 100 percent and minus 50 percent movement capability, traffic- and nontraffic-use, neutral-curing silicone joint sealant; ASTM C 920, Type S, Grade NS, Class 100/50, Uses T and NT.
   1. Manufacturers: Subject to compliance with requirements, available manufacturers offering products that may be incorporated into the Work include, but are not limited to the following:
      a. Dow Corning Corporation.
      b. May National Associates, Inc.; a subsidiary of Sika Corporation.
      c. Pecora Corporation.
      d. Sika Corporation; Joint Sealants.

2.03 URETHANE JOINT SEALANTS

A. Urethane, S, NS, 100/50, T, NT: Single-component, nonsag, plus 100 percent and minus 50 percent movement capability, traffic- and nontraffic-use, urethane joint sealant; ASTM C 920, Type S, Grade NS, Class 100/50, Uses T and NT.
   1. Manufacturers: Subject to compliance with requirements, available manufacturers offering products that may be incorporated into the Work include, but are not limited to the following:
      a. Sika Corporation; Joint Sealants.
      b. BASF Corp. – Construction Chemicals.

2.04 BUTYL JOINT SEALANTS

A. Butyl-Rubber-Based Joint Sealants: ASTM C 1311.
   1. Manufacturers: Subject to compliance with requirements, available manufacturers offering products that may be incorporated into the Work include, but are not limited to the following:
      a. Bostik, Inc.
      b. Pecora Corporation.

2.05 JOINT-SEALANT BACKING

A. Sealant Backing Material, General: Nonstaining; compatible with joint substrates, sealants, primers, and other joint fillers; and approved for applications indicated by sealant manufacturer based on field experience and laboratory testing.
   1. Manufacturers: Subject to compliance with requirements, available manufacturers offering products that may be incorporated into the Work include, but are not limited to the following:
      a. Adfast.
      b. Alcot Plastics Ltd.
      c. BASF Corp. - Construction Chemicals.
      d. Construction Foam Products; a division of Nomaco, Inc.

B. Cylindrical Sealant Backings: ASTM C 1330, Type C (closed-cell material with a surface skin) or any of the preceding types, as approved in writing by joint-sealant manufacturer for joint application indicated, and of size and density to control sealant depth and otherwise contribute to producing optimum sealant performance.

C. Bond-Breaker Tape: Polyethylene tape or other plastic tape recommended by sealant manufacturer for preventing sealant from adhering to rigid, inflexible joint-filler materials or joint surfaces at back of joint. Provide self-adhesive tape where applicable.

2.06 MISCELLANEOUS MATERIALS

A. Primer: Material recommended by joint-sealant manufacturer where required for adhesion of sealant to joint substrates indicated, as determined from preconstruction joint-sealant-substrate tests and field tests.

B. Cleaners for Nonporous Surfaces: Chemical cleaners acceptable to manufacturers of sealants and sealant backing materials, free of oily residues or other substances capable of staining or harming joint substrates and adjacent nonporous surfaces in any way, and formulated to promote optimum adhesion of sealants to joint substrates.

C. Masking Tape: Nonstaining, nonabsorbent material compatible with joint sealants and surfaces adjacent to joints.

PART 3 EXECUTION

3.01 EXAMINATION

A. Examine joints indicated to receive joint sealants, with Installer present, for compliance with requirements for joint configuration, installation tolerances, and other conditions affecting performance of the Work.

B. Proceed with installation only after unsatisfactory conditions have been corrected.

3.02 PREPARATION

A. Surface Cleaning of Joints: Clean out joints immediately before installing joint sealants to comply with joint-sealant manufacturer's written instructions and the following requirements:
   1. Remove all foreign material from joint substrates that could interfere with adhesion of joint sealant, including dust, paints (except for permanent, protective coatings tested and approved for sealant adhesion and compatibility by sealant manufacturer), old joint sealants, oil, grease, waterproofing, water repellents, water, surface dirt, and frost.

2. Clean porous joint substrate surfaces by brushing, grinding, mechanical abrading, or a combination of these methods to produce a clean, sound substrate capable of developing optimum bond with joint sealants. Remove loose particles remaining after cleaning operations above by vacuuming or blowing out joints with oil-free compressed air. Porous joint substrates include the following:
   a. Concrete.
   b. Masonry.
   c. Unglazed surfaces of ceramic tile.
3. Remove laitance and form-release agents from concrete.
4. Clean nonporous joint substrate surfaces with chemical cleaners or other means that do not stain, harm substrates, or leave residues capable of interfering with adhesion of joint sealants. Nonporous joint substrates include the following:
   a. Metal.
   b. Glass.
   c. Porcelain enamel.
   d. Glazed surfaces of ceramic tile.

B. Joint Priming: Prime joint substrates where recommended by joint-sealant manufacturer or as indicated by preconstruction joint-sealant-substrate tests or prior experience. Apply primer to comply with joint-sealant manufacturer's written instructions. Confine primers to areas of joint-sealant bond; do not allow spillage or migration onto adjoining surfaces.

C. Masking Tape: Use masking tape where required to prevent contact of sealant or primer with adjoining surfaces that otherwise would be permanently stained or damaged by such contact or by cleaning methods required to remove sealant smears. Remove tape immediately after tooling without disturbing joint seal.

3.03 INSTALLATION OF JOINT SEALANTS

A. General: Comply with joint-sealant manufacturer's written installation instructions for products and applications indicated, unless more stringent requirements apply.

B. Sealant Installation Standard: Comply with recommendations in ASTM C 1193 for use of joint sealants as applicable to materials, applications, and conditions indicated.

C. Install sealant backings of kind indicated to support sealants during application and at position required to produce cross-sectional shapes and depths of installed sealants relative to joint widths that allow optimum sealant movement capability.
   1. Do not leave gaps between ends of sealant backings.
   2. Do not stretch, twist, puncture, or tear sealant backings.
   3. Remove absorbent sealant backings that have become wet before sealant application and replace them with dry materials.

D. Install bond-breaker tape behind sealants where sealant backings are not used between sealants and backs of joints.

E. Install sealants using proven techniques that comply with the following and at the same time backings are installed:
   1. Place sealants so they directly contact and fully wet joint substrates.
   2. Completely fill recesses in each joint configuration.
   3. Produce uniform, cross-sectional shapes and depths relative to joint widths that allow optimum sealant movement capability.

F. Tooling of Nonsag Sealants: Immediately after sealant application and before skinning or curing begins, tool sealants according to requirements specified in subparagraphs below to form smooth, uniform beads of configuration indicated; to eliminate air pockets; and to ensure contact and adhesion of sealant with sides of joint.
   1. Remove excess sealant from surfaces adjacent to joints.
   2. Use tooling agents that are approved in writing by sealant manufacturer and that do not discolor sealants or adjacent surfaces.

3. Provide concave joint profile per Figure 8A in ASTM C 1193 unless otherwise indicated.
4. Provide flush joint profile at locations indicated on Drawings according to Figure 8B in ASTM C 1193.
5. Provide recessed joint configuration of recess depth and at locations indicated on Drawings according to Figure 8C in ASTM C 1193.
    a. Use masking tape to protect surfaces adjacent to recessed tooled joints.

3.04 FIELD QUALITY CONTROL

A. Field-Adhesion Testing: Field test joint-sealant adhesion to joint substrates as follows:
1. Extent of Testing: Test completed and cured sealant joints as follows:
    a. Perform 10 tests for the first 1000 feet (30480 cm) of joint length for each kind of sealant and joint substrate.
    b. Perform one test for each 1000 feet (30480 cm) of joint length thereafter or one test per each floor per elevation.
2. Test Method: Test joint sealants according to Method A, Field-Applied Sealant Joint Hand Pull Tab, in Appendix X1 in ASTM C 1193 or Method A, Tail Procedure, in ASTM C 1521.
    a. For joints with dissimilar substrates, verify adhesion to each substrate separately; extend cut along one side, verifying adhesion to opposite side. Repeat procedure for opposite side.
3. Inspect tested joints and report on the following:
    a. Whether sealants filled joint cavities and are free of voids.
    b. Whether sealant dimensions and configurations comply with specified requirements.
    c. Whether sealants in joints connected to pulled-out portion failed to adhere to joint substrates or tore cohesively. Include data on pull distance used to test each kind of product and joint substrate. Compare these results to determine if adhesion complies with sealant manufacturer's field-adhesion hand-pull test criteria.
4. Record test results in a field-adhesion-test log. Include dates when sealants were installed, names of persons who installed sealants, test dates, test locations, whether joints were primed, adhesion results and percent elongations, sealant material, sealant configuration, and sealant dimensions.
5. Repair sealants pulled from test area by applying new sealants following same procedures used originally to seal joints. Ensure that original sealant surfaces are clean and that new sealant contacts original sealant.

B. Evaluation of Field-Adhesion-Test Results: Sealants not evidencing adhesive failure from testing or noncompliance with other indicated requirements will be considered satisfactory. Remove sealants that fail to adhere to joint substrates during testing or to comply with other requirements. Retest failed applications until test results prove sealants comply with indicated requirements.

3.05 CLEANING

A. Clean off excess sealant or sealant smears adjacent to joints as the Work progresses by methods and with cleaning materials approved in writing by manufacturers of joint sealants and of products in which joints occur.

3.06 PROTECTION

A. Protect joint sealants during and after curing period from contact with contaminating substances and from damage resulting from construction operations or other causes so sealants are without deterioration or damage at time of Substantial Completion. If, despite such protection, damage or deterioration occurs, cut out, remove, and repair damaged or deteriorated joint sealants immediately so installations with repaired areas are indistinguishable from original work.

3.07 JOINT-SEALANT SCHEDULE

A. Joint-Sealant Application: Exterior and interior joints in horizontal traffic surfaces.
1. Joint Locations:

a. Isolation and contraction joints in cast-in-place concrete slabs.
b. Other joints as indicated on Drawings.

2. Joint Sealant: Urethane, S, NS, 100/50, T, NT
3. Joint-Sealant Color: As selected by Architect from manufacturer's full range of colors.

B. Joint-Sealant Application: Exterior joints in vertical surfaces and horizontal nontraffic surfaces.
1. Joint Locations:
a. Perimeter joints between frames of doors windows and louvers.
b. Control and expansion joints in ceilings and other overhead surfaces.
c. Other joints as indicated on Drawings.
2. Joint Sealant: Silicone, S, NS, 100/50, T, NT.
3. Joint-Sealant Color: As selected by Architect from manufacturer's full range of colors .

C. Joint-Sealant Application: Interior joints in vertical surfaces and horizontal nontraffic surfaces.
1. Joint Locations:
a. Control and expansion joints on exposed interior surfaces of exterior walls.
b. Vertical joints on exposed surfaces of unit masonry walls.
c. Other joints as indicated on Drawings.
2. Joint Sealant: Urethane, S, NS, 100/50, T, NT.
3. Joint-Sealant Color: As selected by Architect from manufacturer's full range of colors.

D. Joint-Sealant Application: Mildew-resistant interior joints in vertical surfaces and horizontal nontraffic surfaces.
1. Joint Locations:
a. Joints between plumbing fixtures and adjoining walls, floors, and counters.
b. Tile control and expansion joints where indicated.
c. Other joints as indicated on Drawings.
2. Joint Sealant: Silicone, S, NS, 100/50, T, NT.
3. Joint-Sealant Color: As selected by Architect from manufacturer's full range of colors.

E. Joint-Sealant Application: Concealed mastics.
1. Joint Locations:
a. Aluminum thresholds.
b. Sill plates.
c. Other joints as indicated on Drawings.
2. Joint Sealant: Butyl-rubber based.
3. Joint-Sealant Color: As selected by Architect from manufacturer's full range of colors.

END OF SECTION 079200

This page intentionally left blank

SECTION 081113
HOLLOW METAL DOORS AND FRAMES

PART 1 GENERAL

4.01 SECTION INCLUDES

A. Non-fire-rated hollow metal doors and frames.

B. Hollow metal frames for wood doors.

C. Thermally insulated hollow metal doors with frames.

D. Accessories, including glazing, louvers, and matching panels.

4.02 RELATED REQUIREMENTS

A. Section 087100 - Door Hardware.

B. Section 088000 - Glazing: Glass for doors and borrowed lites.

4.03 ABBREVIATIONS AND ACRONYMS

A. ANSI: American National Standards Institute.

B. HMMA: Hollow Metal Manufacturers Association.

C. NFPA: National Fire Protection Association.

D. SDI: Steel Door Institute.

E. UL: Underwriters Laboratories.

4.04 REFERENCE STANDARDS

A. ADA Standards - 2010 ADA Standards for Accessible Design; 2010.

B. ANSI/SDI A250.4 - Test Procedure and Acceptance Criteria for Physical Endurance for Steel Doors, Frames and Frame Anchors; 2022.

C. ANSI/SDI A250.8 - Specifications for Standard Steel Doors and Frames (SDI-100); 2023.

D. ANSI/SDI A250.10 - Test Procedure and Acceptance Criteria for Prime Painted Steel Surfaces for Steel Doors and Frames; 2020.

E. ASTM A653/A653M - Standard Specification for Steel Sheet, Zinc-Coated (Galvanized) or Zinc-Iron Alloy-Coated (Galvannealed) by the Hot-Dip Process; 2023.

F. ASTM A1008/A1008M - Standard Specification for Steel, Sheet, Cold-Rolled, Carbon, Structural, High-Strength Low-Alloy, High-Strength Low-Alloy with Improved Formability, Required Hardness, Solution Hardened, and Bake Hardenable; 2023, with Editorial Revision.

G. ASTM A1011/A1011M - Standard Specification for Steel, Sheet and Strip, Hot-Rolled, Carbon, Structural, High-Strength Low-Alloy, High-Strength Low-Alloy with Improved Formability, and Ultra-High Strength; 2023.

H. ASTM C143/C143M - Standard Test Method for Slump of Hydraulic-Cement Concrete; 2020.

I. ASTM C476 - Standard Specification for Grout for Masonry; 2023.

J. ASTM E84 - Standard Test Method for Surface Burning Characteristics of Building Materials; 2023d.

K. BHMA A156.115 - Hardware Preparation in Steel Doors and Frames; 2016.

L. ICC A117.1 - Accessible and Usable Buildings and Facilities; 2017.

M. NAAMM HMMA 830 - Hardware Selection for Hollow Metal Doors and Frames; 2002.

N. NAAMM HMMA 831 - Hardware Locations for Hollow Metal Doors and Frames; 2011.

O. NAAMM HMMA 840 - Guide Specifications For Receipt, Storage and Installation of Hollow Metal Doors and Frames; 2017.

P. NAAMM HMMA 861 - Guide Specifications for Commercial Hollow Metal Doors and Frames; 2014.

Q. SDI 117 - Manufacturing Tolerances for Standard Steel Doors and Frames; 2023.

4.05 SUBMITTALS

A. See Section 013000 - Administrative Requirements for submittal procedures.

B. Product Data: Materials and details of design and construction, hardware locations, reinforcement type and locations, anchorage and fastening methods, and finishes.

C. Shop Drawings: Details of each opening, showing elevations, glazing, frame profiles, and any indicated finish requirements.

4.06 DELIVERY, STORAGE, AND HANDLING

A. Comply with NAAMM HMMA 840 or ANSI/SDI A250.8 (SDI-100) in accordance with specified requirements.

B. Protect with resilient packaging; avoid humidity build-up under coverings; prevent corrosion and adverse effects on factory applied painted finish.

PART 2 PRODUCTS

5.01 MANUFACTURERS

A. Hollow Metal Doors and Frames:
1. Ceco Door, an Assa Abloy Group company; _____: www.assaabloydss.com/#sle.
2. Curries, an Assa Abloy Group company; _____: www.assaabloydss.com/#sle.
3. Republic Doors, an Allegion brand; ____: www.republicdoor.com/#sle.
4. Steelcraft, an Allegion brand; ____: www.allegion.com/#sle.
5. Technical Glass Products; SteelBuilt Window & Door Systems: www.tgpamerica.com/#sle.
6. Substitutions: See Section 016000 - Product Requirements.

5.02 PERFORMANCE REQUIREMENTS

A. Requirements for Hollow Metal Doors and Frames:
1. Steel Sheet: Comply with one or more of the following requirements; galvannealed steel complying with ASTM A653/A653M, cold-rolled steel complying with ASTM A1008/A1008M, or hot-rolled pickled and oiled (HRPO) steel complying with ASTM A1011/A1011M, commercial steel (CS) Type B, for each.
2. Accessibility: Comply with ICC A117.1 and ADA Standards.
3. Exterior Door Top Closures: Flush end closure channel, with top and door faces aligned.
4. Door Edge Profile: Beveled, both sides.
5. Typical Door Face Sheets: Flush.
6. Glazed Lights: Non-removable stops on non-secure side; sizes and configurations as indicated on drawings. Style: Manufacturer's standard.
7. Hardware Preparations, Selections and Locations: Comply with NAAMM HMMA 830 and NAAMM HMMA 831 or BHMA A156.115 and ANSI/SDI A250.8 (SDI-100) in accordance with specified requirements.
8. Zinc Coating for Typical Interior and/or Exterior Locations: Provide metal components zinc-coated (galvanized) and/or zinc-iron alloy-coated (galvannealed) by the hot-dip process in accordance with ASTM A653/A653M, with manufacturer's standard coating thickness, unless noted otherwise for specific hollow metal doors and frames.
    a. Based on SDI Standards: Provide at least A40/ZF120 (galvannealed) when necessary, coating not required for typical interior door applications, and at least A60/ZF180 (galvannealed) for corrosive locations.

B. Combined Requirements: If a particular door and frame unit is indicated to comply with more than one type of requirement, comply with the specified requirements for each type; for instance, an exterior door that is also indicated as being sound-rated must comply with the requirements specified for exterior doors and for sound-rated doors; where two requirements conflict, comply with the most stringent.

5.03 HOLLOW METAL DOORS

A. Exterior Doors: Thermally insulated.
   1. Based on SDI Standards: ANSI/SDI A250.8 (SDI-100).
      a. Level 2 - Heavy-duty.
      b. Physical Performance Level B, 500,000 cycles; in accordance with ANSI/SDI A250.4.
      c. Model 1 - Full Flush.
      d. Door Face Metal Thickness: 16 gauge, 0.053 inch (1.3 mm), minimum.
      e. Zinc Coating: A60/ZF180 galvannealed coating; ASTM A653/A653M.
   2. Door Core Material: Polyurethane, 1.8 lbs/cu ft minimum density.
      a. Foam Plastic Insulation: Manufacturer's standard board insulation with maximum flame spread index (FSI) of 75, and maximum smoke developed index (SDI) of 450 in accordance with ASTM E84, and completely enclosed within interior of door.
   3. Door Thermal Resistance: R-Value of 8.7, minimum, for installed thickness of polyurethane.
   4. Door Thickness: 1-3/4 inches (44.5 mm), nominal.
   5. Top Closures for Outswinging Doors: Flush with top of faces and edges.
   6. Door Face Sheets: Flush.
   7. Weatherstripping: Refer to Section 087100.
   8. Door Finish: Factory primed.

B. Interior Doors, Non-Fire-Rated:
   1. Based on SDI Standards: ANSI/SDI A250.8 (SDI-100).
      a. Level 1 - Standard-duty.
      b. Physical Performance Level C, 250,000 cycles; in accordance with ANSI/SDI A250.4.
      c. Model 1 - Full Flush.
      d. Door Face Metal Thickness: 18 gauge, 0.042 inch (1.0 mm), minimum.
   2. Door Core Material: Manufacturers standard core material/construction and in compliance with requirements.
   3. Door Thickness: 1-3/4 inches (44.5 mm), nominal.
   4. Door Face Sheets: Flush.
   5. Door Finish: Factory Primed.

5.04 HOLLOW METAL FRAMES

A. Comply with standards and/or custom guidelines as indicated for corresponding door in accordance with applicable door frame requirements.

B. Exterior Door Frames: Knock-down type.
   1. Galvanizing: Components hot-dipped zinc-iron alloy-coated (galvannealed) in accordance with ASTM A653/A653M, with A40/ZF120 coating.
   2. Frame Metal Thickness: 14 gauge, 0.067 inch (1.7 mm), minimum.
   3. Frame Finish: Factory primed and field finished..
   4. Weatherstripping: Separate, see Section 087100.

C. Interior Door Frames, Non-Fire Rated: Slip-on type at gypsum board walls, and knock-down type at masonry walls.
   1. Terminated Stops: Provide at interior doors; closed end stop terminated 6 inch (150 mm), maximum, above floor at 45 degree angle.
   2. Frame Metal Thickness: 16 gauge, 0.053 inch (1.3 mm), minimum.
   3. Frame Finish: Factory primed and field finished.

5.05 FINISHES

A. Primer: Rust-inhibiting, complying with ANSI/SDI A250.10, door manufacturer's standard.

5.06 ACCESSORIES

A. Door Window Frames: Door window frames with glazing securely fastened within door opening.

1. Size: As indicated on drawings.
2. Frame Material: 18 gauge, 0.0478 inch (1.21 mm), galvanized steel.
3. Glazing: 1/4 inch (6.4 mm) thick, tempered glass, in compliance with requirements of authorities having jurisdiction.

B. Grout for Frames: Mortar grout complying with ASTM C476 with maximum slump of 4 inches (102 mm) as measured in accordance with ASTM C143/C143M for hand troweling in place; plaster grout and thinner pumpable grout are prohibited.

C. Temporary Frame Spreaders: Provide for factory- or shop-assembled frames.

PART 3 EXECUTION

6.01 EXAMINATION

A. Verify existing conditions before starting work.

B. Verify that opening sizes and tolerances are acceptable.

C. Verify that finished walls are in plane to ensure proper door alignment.

6.02 PREPARATION

A. Coat inside of frames to be installed in masonry or to be grouted, with bituminous coating, prior to installation.

6.03 INSTALLATION

A. Install doors and frames in accordance with manufacturer's instructions and related requirements of specified door and frame standards or custom guidelines indicated.

B. Coordinate frame anchor placement with wall construction.

C. Grout frames in masonry construction, using hand trowel methods; brace frames so that pressure of grout before setting will not deform frames.

D. Install door hardware as specified in Section 087100.

E. Coordinate installation of electrical connections to electrical hardware items.

F. Touch up damaged factory finishes.

6.04 TOLERANCES

A. Clearances Between Door and Frame: Comply with related requirements of specified frame standards or custom guidelines indicated in accordance with SDI 117 or NAAMM HMMA 861.

B. Maximum Diagonal Distortion: 1/16 inch (1.6 mm) measured with straight edge, corner to corner.

6.05 ADJUSTING

A. Adjust for smooth and balanced door movement.

B. Adjust sound control doors so that seals are fully engaged when door is closed.

C. Test sound control doors for force to close, latch, and unlatch; adjust as necessary in compliance with requirements.

6.06 SCHEDULE

A. Refer to Door and Frame Schedule on the drawings.

END OF SECTION 081113

SECTION 081416
FLUSH WOOD DOORS

PART 1 GENERAL

1.01 SECTION INCLUDES

A. Flush wood doors; flush and flush glazed configuration; _____.

1.02 RELATED REQUIREMENTS

A. Section 081113 - Hollow Metal Doors and Frames.

B. Section 087100 - Door Hardware.

C. Section 088000 - Glazing.

1.03 REFERENCE STANDARDS

A. ANSI A135.4 - Basic Hardboard; 2012 (Reaffirmed 2020).

B. ANSI A208.1 - American National Standard for Particleboard; 2022.

C. AWI/AWMAC/WI (AWS) - Architectural Woodwork Standards, 2nd Edition; 2014, with Errata (2016).

D. AWMAC/WI (NAAWS) - North American Architectural Woodwork Standards; 2021, with Errata.

1.04 SUBMITTALS

A. See Section 013000 - Administrative Requirements for submittal procedures.

B. Product Data: Indicate door core materials and construction; veneer species, type and characteristics.

C. Shop Drawings: Show doors and frames, elevations, sizes, types, swings, undercuts, beveling, blocking for hardware, factory machining, factory finishing, cutouts for glazing and other details.
   1. Provide information as required by AWI/AWMAC/WI (AWS) or AWMAC/WI (NAAWS).

D. Certificate: Submit labels and certificates required by quality assurance and quality control programs.

E. Manufacturer's Installation Instructions: Indicate special installation instructions.

F. Warranty, executed in Owner's name.

1.05 QUALITY ASSURANCE

A. Maintain one copy of the specified door quality standard on site for review during installation and finishing.

B. Woodwork Quality Assurance Program:
   1. Provide labels indicating that the installed work complies with AWI/AWMAC/WI (AWS) or AWMAC/WI (NAAWS) requirements for grade or grades specified.
   2. Provide designated labels on shop drawings as required by quality assurance program.
   3. Provide designated labels on installed products as required by quality assurance program.
   4. Submit documentation upon completion of installation that verifies this work is in compliance with specified requirements.

1.06 DELIVERY, STORAGE, AND HANDLING

A. Package, deliver and store doors in accordance with specified quality standard.

B. Accept doors on site in manufacturer's packaging, and inspect for damage.

C. Protect doors with resilient packaging sealed with heat shrunk plastic; do not store in damp or wet areas or areas where sunlight might bleach veneer; seal top and bottom edges with tinted sealer if stored more than one week, and break seal on site to permit ventilation.

1.07 WARRANTY

A. See Section 017800 - Closeout Submittals for additional warranty requirements.

PART 2 PRODUCTS

2.01 MANUFACTURERS

A. Wood Veneer Faced Doors:
   1. Horton Automatics, a division of Overhead Door Corporation: www.overheaddoor.com/#sle.
   2. Masonite Architectural; Aspiro Select Wood Veneer Doors: www.architectural.masonite.com/#sle.
   3. VT Industries, Inc: www.vtindustries.com/#sle.
   4. Substitutions: See Section 016000 - Product Requirements.
   5. Approved Suppliers
      a. ABS
      b. Beadon Metals
      c. Robert I Merrill

2.02 DOORS

A. Doors: See drawings for locations and additional requirements.
   1. Quality Standard: Custom Grade, Heavy Duty performance, in accordance with AWI/AWMAC/WI (AWS) or AWMAC/WI (NAAWS), unless noted otherwise.
   2. Wood Veneer Faced Doors: 5-ply unless otherwise indicated.

B. Interior Doors: 1-3/4 inches (44 mm) thick unless otherwise indicated; flush construction.
   1. Provide solid core doors at each location.

2.03 DOOR AND PANEL CORES

A. Non-Rated Solid Core and 20 Minute Rated Doors: Type particleboard core (PC), plies and faces as indicated.

2.04 DOOR FACINGS

A. Veneer Facing for Transparent Finish: White birch, veneer grade in accordance with quality standard indicated, plain sliced (flat cut), with book match between leaves of veneer, running match of spliced veneer leaves assembled on door or panel face.
   1. Vertical Edges: Same species as face veneer.
   2. "Running Match" each pair of doors and doors in close proximity to each other.
   3. "Pair Match" each pair of doors; "Set Match" pairs of doors within 10 feet (3 m) of each other when doors are closed.

2.05 DOOR CONSTRUCTION

A. Fabricate doors in accordance with door quality standard specified.

B. Cores Constructed with stiles and rails:
   1. Provide solid blocks at lock edge and top of door for closer for hardware reinforcement.

C. Glazed Openings: Non-removable stops on non-secure side; sizes and configurations as indicated on drawings.

D. Factory machine doors for hardware other than surface-mounted hardware, in accordance with hardware requirements and dimensions.

E. Factory fit doors for frame opening dimensions identified on shop drawings, with edge clearances in accordance with specified quality standard.

F. Provide edge clearances in accordance with the quality standard specified.

2.06 FINISHES - WOOD VENEER DOORS

A. Finish work in accordance with AWI/AWMAC/WI (AWS) or AWMAC/WI (NAAWS), Section 5 - Finishing for grade specified and as follows:
   1. Transparent:
      a. System - 12, Polyurethane, Water-based.
      b. Stain: As selected by Architect.

c. Sheen: Satin.

B. Factory finish doors in accordance with approved sample.

C. Seal door top edge with color sealer to match door facing.

2.07 ACCESSORIES

A. Glazed Openings:
1. Glazing: Single vision units, 1/4 inch (6.4 mm) thick glass.
2. Tint: Clear.

B. Door Window Frames: Door window frames with glazing securely fastened within door opening.
1. Size: As indicated on drawings.
2. Frame Material: 18 gauge, 0.0478 inch (1.21 mm), galvanized steel.
3. Metal Finish: Dark Bronze polyester powder coating.
4. Glazing: 1/4 inch (6.4 mm) thick, tempered glass, in compliance with requirements of authorities having jurisdiction.

PART 3 EXECUTION

3.01 EXAMINATION

A. Verify existing conditions before starting work.

B. Verify that opening sizes and tolerances are acceptable.

C. Do not install doors in frame openings that are not plumb or are out-of-tolerance for size or alignment.

3.02 INSTALLATION

A. Install doors in accordance with manufacturer's instructions and specified quality standard.

B. Factory-Finished Doors: Do not field cut or trim; if fit or clearance is not correct, replace door.

C. Use machine tools to cut or drill for hardware.

D. Coordinate installation of doors with installation of frames and hardware.

3.03 TOLERANCES

A. Comply with specified quality standard for fit and clearance tolerances.

B. Comply with specified quality standard for telegraphing, warp, and squareness.

3.04 ADJUSTING

A. Adjust doors for smooth and balanced door movement.

B. Adjust closers for full closure.

END OF SECTION 081416

This page intentionally left blank

SECTION 083100
ACCESS DOORS AND PANELS

PART 1 GENERAL

1.01 SECTION INCLUDES

A. Ceiling-mounted access units.

1.02 RELATED REQUIREMENTS

A. Section 099123 - Interior Painting: Field paint finish.

1.03 SUBMITTALS

A. See Section 013000 - Administrative Requirements for submittal procedures.

1.04 QUALITY ASSURANCE

A. Manufacturer Qualifications: Company specializing in manufacturing the products specified in this section with minimum three years documented experience.

B. Installer Qualifications: Company specializing in performing work of the type specified and with at least three years documented experience.

PART 2 PRODUCTS

2.01 ACCESS DOORS AND PANELS ASSEMBLIES

A. Ceiling-Mounted Units with Return Air Grille:
   1. Location: As indicated on drawings.
   2. Panel Material: Aluminum extrusion with gypsum board inlay.
   3. Size - Other Ceilings: 12 by 12 inches (305 by 305 mm).
   4. Door/Panel: Hinged, standard duty, with tool-operated spring or cam lock and no handle.

2.02 CEILING-MOUNTED ACCESS UNITS

A. Manufacturers:
   1. Activar Construction Products Group, Inc. - JL Industries: www.activarcpg.com/#sle.
   2. ACUDOR Products Inc: www.acudor.com/#sle.
   3. Babcock-Davis: www.babcockdavis.com/#sle.
   4. BAUCO Access Panel Solutions Inc: www.bauco.com/#sle.
   5. Best Access Doors: www.bestaccessdoors.com/#sle.
   6. Substitutions: See Section 016000 - Product Requirements.

B. Ceiling-Mounted Units: Factory-fabricated door and frame, fully assembled units with corner joints welded, filled and ground flush; square and without rack or warp; coordinate requirements with type of installation assembly being used for each unit.
   1. Door Style: Single thickness with rolled or turned in edges.
   2. Hardware:
      a. Hinges for Non-Fire-Rated Units: Concealed, constant force closure spring type.
      b. Latch/Lock: Tamperproof tool-operated cam latch.
      c. Number of Locks/Latches Required: As recommended by manufacturer for size of unit.

PART 3 EXECUTION

3.01 EXAMINATION

A. Verify that rough openings are correctly sized and located.

B. Begin installation only after substrates have been properly prepared, and if the responsibility of another installer, notify Architect of unsatisfactory preparation before proceeding.

3.02 PREPARATION

A. Clean surfaces thoroughly prior to proceeding with this work.

B. Prepare surfaces using methods recommended by manufacturer for applicable substrates in accordance with project conditions.

3.03 INSTALLATION

A. Install units in accordance with manufacturer's instructions.

B. Install frames plumb and level in openings, and secure units rigidly in place.

C. Position units to provide convenient access to concealed equipment when necessary.

END OF SECTION 083100

SECTION 083613
SECTIONAL DOORS

PART 1 GENERAL

1.01 SECTION INCLUDES

A. Overhead sectional doors, electrically operated.

B. Operating hardware and supports.

C. Electrical controls.

1.02 RELATED REQUIREMENTS

A. Section 079200 - Joint Sealants: Sealing joints between frames and adjacent construction.

B. Section 260533.13 - Conduit for Electrical Systems: Conduit from electric circuit to operator and from operator to control station.

C. Section 260533.13 - Conduit for Electrical Systems: Empty conduit from control units to door operator.

D. Section 260583 - Wiring Connections.

1.03 REFERENCE STANDARDS

A. ASTM A653/A653M - Standard Specification for Steel Sheet, Zinc-Coated (Galvanized) or Zinc-Iron Alloy-Coated (Galvannealed) by the Hot-Dip Process; 2023.

B. ASTM C1036 - Standard Specification for Flat Glass; 2021.

C. DASMA 102 - American National Standard Specifications for Sectional Doors; 2018.

D. ITS (DIR) - Directory of Listed Products; Current Edition.

E. NEMA ICS 2 - Industrial Control and Systems Controllers, Contactors and Overload Relays Rated 600 Volts; 2008 (Reaffirmed 2020).

F. NEMA 250 - Enclosures for Electrical Equipment (1000 Volts Maximum); 2020.

G. NFPA 70 - National Electrical Code; Most Recent Edition Adopted by Authority Having Jurisdiction, Including All Applicable Amendments and Supplements.

H. UL (DIR) - Online Certifications Directory; Current Edition.

I. UL 325 - Standard for Door, Drapery, Gate, Louver, and Window Operators and Systems; Current Edition, Including All Revisions.

1.04 SUBMITTALS

A. See Section 013000 - Administrative Requirements for submittal procedures.

B. Shop Drawings: Indicate opening dimensions and required tolerances, connection details, anchorage spacing, hardware locations, and installation details.

1.05 QUALITY ASSURANCE

1.06 WARRANTY

A. Extended Correction Period: Correct defective work within a 2-year period commencing on Date of Substantial Completion.

PART 2 PRODUCTS

2.01 MANUFACTURERS

A. Sectional Doors:
   1. Basis of Design: Overhead Door Corporation; Model 430 - Sectional Steel Door: www.overheaddoor.com/#sle.
   2. Raynor Garage Doors; EnergyCore Series, Model that meets basis of deign: www.raynor.com/#sle.

3. Wayne-Dalton, a Division of Overhead Door Corporation; Thermospan 125: www.wayne-dalton.com/#sle.

2.02 PERFORMANCE REQUIREMENTS

A. DFCM Hign Performance Building Standard

2.03 STEEL DOORS

A. Type SSD-1 - Doors: Flush steel, insulated; standard lift operating style with track and hardware; complying with DASMA 102, Commercial application.
   1. Door Panels: Steel construction; outer steel sheet of 20 gauge, 0.0359 inch (0.91 mm) minimum thickness, flush profile; inner steel sheet of 20 gauge, 0.0359 inch (0.91 mm) minimum thickness, flat profile; core reinforcement ___ inch (___ mm) sheet steel roll formed to channel shape, rabbeted weather joints at meeting rails; polyurethane insulation.
   2. Door Nominal Thickness: 2 inches (51 mm) thick.
   3. Exterior Finish:
      a. Factory finished with acrylic baked enamel; color as selected by Architect.
   4. Interior Finish:
      a. Factory finished with acrylic baked enamel; color as selected from manufacturers standard line.
   5. Glazed Lites: Full panel width, 2 row; set in place with resilient glazing channel.
      a. Glazing: Annealed float glass; insulated glass units; clear; 1/8 inch (3 mm) nominal overall thickness.
   6. Electric Operation: Electric control station.

2.04 COMPONENTS

A. Track: Rolled galvanized steel, 0.090 inch (2.3 mm) minimum thickness; 2 inch (50 mm) wide, continuous one piece per side; galvanized steel mounting brackets 1/4 inch (6 mm) thick.

B. Hinge and Roller Assemblies: Heavy duty hinges and adjustable roller holders of galvanized steel; floating hardened steel bearing rollers, located at top and bottom of each panel, each side.

C. Lift Mechanism: Torsion spring on cross head shaft, with braided galvanized steel lifting cables.

D. Sill Weatherstripping: Resilient hollow rubber strip, one piece; fitted to bottom of door panel, full length contact.

E. Jamb Weatherstripping: Roll formed steel section full height of jamb, fitted with resilient weatherstripping, placed in moderate contact with door panels.

F. Head Weatherstripping: EPDM rubber seal, one piece full length.

G. Panel Joint Weatherstripping: Neoprene foam seal, one piece full length.

H. Lock: Inside center mounted, adjustable keeper, spring activated latch bar with feature to retain in locked or retracted position; interior and exterior handle.

2.05 MATERIALS

A. Sheet Steel: Hot-dipped galvanized steel sheet, ASTM A653/A653M, with G60/Z180 coating, plain surface.

B. Float Glass: Provide float glass glazing, unless noted otherwise.
   1. Annealed Type: ASTM C1036, Type I, transparent flat, Class 1 clear, Quality Q3 (glazing select).

C. Insulation: Foamed-in-place polyurethane, bonded to facing.

2.06 ELECTRIC OPERATION

A. Operator, Controls, Actuators, and Safeties: Comply with UL 325; provide products listed by ITS (DIR), UL (DIR), or testing agency acceptable to authorities having jurisdiction.

1. Provide interlock switches on motor operated units.

B. Electric Operators:
1. Mounting: Side mounted on cross head shaft.
2. Motor Enclosure:
3. Motor Rating: 1/3 hp (250 W); continuous duty.
4. Motor Voltage: 120 volts, single phase, 60 Hz.
5. Motor Controller: NEMA ICS 2, full voltage, reversing magnetic motor starter.
6. Controller Enclosure: NEMA 250, Type 1.
7. Opening Speed: 12 inches per second (300 mm/s).
8. Brake: Adjustable friction clutch type, activated by motor controller.
9. Manual override in case of power failure.
10. See Section 260583 for electrical connections.

C. Wiring Terminations: Provide terminal lugs to match branch circuit conductor quantities, sizes, and materials indicated; enclose terminal lugs in terminal box sized to comply with NFPA 70.

D. Control Station: Provide standard three button (Open-Close-Stop) momentary-contact control device for each operator complying with UL 325.
1. 24 volt circuit.
2. Surface mounted, at interior door jamb.
3. Entrapment Protection Devices: Provide sensing devices and safety mechanisms complying with UL 325.
a. Primary Device: Provide electric sensing edge, wireless sensing, NEMA 1 photo eye sensors, or NEMA 4X photo eye sensors as required with momentary-contact control device.

E. Safety Edge: Located at bottom of sectional door panel, full width; electro-mechanical sensitized type, wired to stop and reverse door direction upon striking object; hollow neoprene covered to provide weatherstrip seal.

PART 3 EXECUTION

3.01 EXAMINATION

A. Verify that wall openings are ready to receive work and opening dimensions and tolerances are within specified limits.

B. Verify that electric power is available and of the correct characteristics.

3.02 PREPARATION

A. Prepare opening to permit correct installation of door unit to perimeter air and vapor barrier seal.

B. Apply primer to wood frame.

3.03 INSTALLATION

A. Install door unit assembly in accordance with manufacturer's instructions.

B. Anchor assembly to wall construction and building framing without distortion or stress.

C. Securely brace door tracks suspended from structure. Secure tracks to structural members only.

D. Fit and align door assembly including hardware.

E. Coordinate installation of electrical service. Complete power and control wiring from disconnect to unit components.

F. Install perimeter trim.

3.04 TOLERANCES

A. Maximum Variation from Plumb: 1/16 inch (1.5 mm).

B. Maximum Variation from Level: 1/16 inch (1.5 mm).

C. Longitudinal or Diagonal Warp: Plus or minus 1/8 inch (3 mm) from 10 ft (3 m) straight edge.

D. Maintain dimensional tolerances and alignment with adjacent work.

3.05 ADJUSTING

A. Adjust door assembly for smooth operation and full contact with weatherstripping.

3.06 CLEANING

A. Clean doors and frames and glazing.

B. Remove temporary labels and visible markings.

3.07 PROTECTION

A. Protect installed products from damage until Date of Substantial Completion.

B. Do not permit construction traffic through overhead door openings after adjustment and cleaning.

END OF SECTION 083613

SECTION 084313
ALUMINUM-FRAMED STOREFRONTS

PART 1 GENERAL

1.01 RELATED DOCUMENTS

A. Drawings and general provisions of the Contract, including General and Supplementary Conditions and Division 01 Specification Sections, apply to this Section.

1.02 SUMMARY

A. Section Includes:
   1. Storefront framing.

B. Related Requirements:

1.03 ALLOWANCES

A. Preconstruction laboratory mockup source quality control and field quality control is part of testing and inspecting allowance.

1.04 PREINSTALLATION MEETINGS

A. Pre-installation Conference: Conduct conference at Project site.

1.05 ACTION SUBMITTALS

A. Product Data: For each type of product.
   1. Include construction details, material descriptions, dimensions of individual components and profiles, and finishes.

B. Shop Drawings: For aluminum-framed storefronts. Include plans, elevations, sections, full-size details, and attachments to other work.
   1. Include details of provisions for assembly expansion and contraction and for draining moisture occurring within the assembly to the exterior.
   2. Include full-size isometric details of each type of vertical-to-horizontal intersection of aluminum-framed storefronts, showing the following:
      a. Joinery, including concealed welds.
      b. Anchorage.
      c. Expansion provisions.
      d. Glazing.
      e. Flashing and drainage.
   3. Show connection to and continuity with adjacent thermal, weather, air, and vapor barriers.

C. Samples for Initial Selection: For units with factory-applied color finishes.

D. Samples for Verification: For each type of exposed finish required, in manufacturer's standard sizes.

E. Fabrication Sample: Of each vertical-to-horizontal intersection of assemblies, made from 12-inch (300-mm) lengths of full-size components and showing details of the following:
   1. Joinery, including concealed welds.
   2. Anchorage.
   3. Expansion provisions.
   4. Glazing.
   5. Flashing and drainage.

1.06 INFORMATIONAL SUBMITTALS

A. Preconstruction Laboratory Mockup Testing Submittals:
   1. Testing Program: Developed specifically for Project.
   2. Test Reports: Prepared by a qualified preconstruction testing agency for each mockup test.
   3. Record Drawings: As-built drawings of preconstruction laboratory mockups showing changes made during preconstruction laboratory mockup testing.

B. Qualification Data: For Installer and field testing agency.

C. Energy Performance Certificates: For aluminum-framed storefronts, accessories, and components, from manufacturer.
   1. Basis for Certification: NFRC-certified energy performance values for each aluminum-framed storefront.

D. Product Test Reports: For aluminum-framed storefronts, for tests performed by manufacturer and witnessed by a qualified testing agency.

E. Quality-Control Program: Developed specifically for Project, including fabrication and installation, according to recommendations in ASTM C 1401. Include periodic quality-control reports.

F. Source quality-control reports.

G. Field quality-control reports.

H. Sample Warranties: For special warranties.

1.07 CLOSEOUT SUBMITTALS

A. Maintenance Data: For aluminum-framed storefronts to include in maintenance manuals.

B. Maintenance Data for Structural Sealant: For structural-sealant-glazed storefront to include in maintenance manuals. Include ASTM C 1401 recommendations for post-installation-phase quality-control program.

1.08 QUALITY ASSURANCE

A. Installer Qualifications: An entity that employs installers and supervisors who are trained and approved by manufacturer.

B. Laboratory Mockup Testing Agency Qualifications: Qualified according to ASTM E 699 for testing indicated.

C. Testing Agency Qualifications: Qualified according to ASTM E 699 for testing indicated.

D. Product Options: Information on Drawings and in Specifications establishes requirements for aesthetic effects and performance characteristics of assemblies. Aesthetic effects are indicated by dimensions, arrangements, alignment, and profiles of components and assemblies as they relate to sightlines, to one another, and to adjoining construction.
   1. Do not change intended aesthetic effects, as judged solely by Architect, except with Architect's approval. If changes are proposed, submit comprehensive explanatory data to Architect for review.

E. Structural-Sealant Glazing: Comply with ASTM C 1401 for design and installation of storefront systems.

1.09 MOCKUPS

A. Mockups: Build mockups to verify selections made under Sample submittals and to demonstrate aesthetic effects and set quality standards for fabrication and installation.
   1. Subject to compliance with requirements, approved mockups may become part of the completed Work if undisturbed at time of Substantial Completion.
   2. Testing will not be required if data based on previous testing of current sealant products match those submitted.

1.10 WARRANTY

A. Special Warranty: Installer agrees to repair or replace components of aluminum-framed storefronts that do not comply with requirements or that fail in materials or workmanship within specified warranty period.
   1. Failures include, but are not limited to, the following:
      a. Structural failures, including, but not limited to, excessive deflection.
      b. Noise or vibration created by wind and thermal and structural movements.

c. Deterioration of metals, metal finishes, and other materials beyond normal weathering.
d. Water penetration through fixed glazing and framing areas.
e. Failure of operating components.

2. Warranty Period: Two years from date of Substantial Completion.

B. Special Finish Warranty: Standard form in which manufacturer agrees to repair finishes or replace aluminum that shows evidence of deterioration of factory-applied finishes within specified warranty period.
1. Deterioration includes, but is not limited to, the following:
a. Color fading more than 5 Hunter units when tested according to ASTM D 2244.
b. Chalking in excess of a No. 8 rating when tested according to ASTM D 4214.
c. Cracking, checking, peeling, or failure of paint to adhere to bare metal.
2. Warranty Period: 20 years from date of Substantial Completion.

PART 2 PRODUCTS

2.01 MANUFACTURERS

A. Manufacturers: Subject to compliance with requirements, provide products by one of the following:
1. Arcadia, Inc.
2. EFCO Corporation.
3. Kawneer North America, an Arconic company.
4. Manko

B. Source Limitations: Obtain all components of aluminum-framed storefront system, including framing spandrel panels and accessories, from single manufacturer.

C. Basis-of-Design Product:
1. 1. Kawneer Company Inc.: Trifab™ 451UT (Thermal) Framing System

2.02 PERFORMANCE REQUIREMENTS

A. General Performance: Comply with performance requirements specified, as determined by testing of aluminum-framed storefronts representing those indicated for this Project without failure due to defective manufacture, fabrication, installation, or other defects in construction.
1. Aluminum-framed storefronts shall withstand movements of supporting structure, including, but not limited to, twist, column shortening, long-term creep, and deflection from uniformly distributed and concentrated live loads.
2. Failure also includes the following:
a. Thermal stresses transferring to building structure.
b. Glass breakage.
c. Noise or vibration created by wind and thermal and structural movements.
d. Loosening or weakening of fasteners, attachments, and other components.
e. Failure of operating units.

B. Structural Loads:
1. Wind Loads: As indicated on Drawings.
2. Other Design Loads: As indicated on Drawings.

C. Deflection of Framing Members: At design wind pressure, as follows:
1. Deflection Normal to Wall Plane: Limited to edge of glass in a direction perpendicular to glass plane not exceeding 1/175 of the glass edge length for each individual glazing lite or an amount that restricts edge deflection of individual glazing lites to 3/4 inch (19.1 mm), whichever is less.
2. Deflection Parallel to Glazing Plane: Limited to 1/360 of clear span or 1/8 inch (3.2 mm), whichever is smaller.
a. Operable Units: Provide a minimum 1/16-inch (1.6-mm) clearance between framing members and operable units.

3. Cantilever Deflection: Where framing members overhang an anchor point, as follows:
   a. Perpendicular to Plane of Wall: No greater than 1/240 of clear span plus 1/4 inch (6.35 mm) for spans greater than 11 feet 8-1/4 inches (3.6 m) or 1/175 times span, for spans less than 11 feet 8-1/4 inches (3.6 m).

D. Structural: Test according to ASTM E 330/E 330M as follows:
   1. When tested at positive and negative wind-load design pressures, storefront assemblies do not evidence deflection exceeding specified limits.
   2. When tested at 150 percent of positive and negative wind-load design pressures, storefront assemblies, including anchorage, do not evidence material failures, structural distress, or permanent deformation of main framing members exceeding 0.2 percent of span.
   3. Test Durations: As required by design wind velocity, but not less than 10 seconds.

E. Air Infiltration: Test according to ASTM E 283 for infiltration as follows:
   1. Fixed Framing and Glass Area:
      a. Air Leakage: The test specimen shall be tested in accordance with ASTM E 283. Air Leakage rate shall not exceed 0.06 cfm/ft2 (0.3 l/s · m2) at a static air pressure differential of 6.2 psf (300 Pa) with interior seal, or, rate shall not exceed 0.06 cfm/ft2 (0.3 l/s · m2) at a static air pressure differential of 1.6 psf (75 Pa) without interior seal. CSA A440 Fixed Rating.

F. Water Penetration under Static Pressure: Test according to ASTM E 331 as follows:
   1. Water Infiltration Tests: Conduct tests in accordance with ASTM E 1105. There shall be no leakage at a minimum static air pressure differential of 8 psf (383 Pa) as defined in AAMA 501.

G. Uniform Load: A static air design load of 35 psf (1680 Pa) shall be applied in the positive and negative direction in accordance with ASTM E 330. There shall be no deflection in excess of L/175 of the span of any framing member. At a structural test load equal to 1.5 times the specified design load, no glass breakage or permanent set in the framing members in excess of 0.2% of their clear spans shall occur.

H. Seismic Performance: Aluminum-framed storefronts shall withstand the effects of earthquake motions determined according to ASCE/SEI 7.
   1. Seismic Drift Causing Glass Fallout: Complying with criteria for passing based on building occupancy type when tested to AAMA 501.4, system must meet design displacement of 0.010 x the story height and ultimate displacement of 1.5 x the design displacement..

I. Energy Performance: Certify and label energy performance according to NFRC as follows:
   1. Thermal Transmittance (U-factor): Fixed glazing and framing areas as a system shall have U-factor of not more than 0.24 Btu/sq. ft. x h x deg F as determined according to NFRC 100.
   2. Solar Heat Gain Coefficient (SHGC): Fixed glazing and framing areas as a system shall have a SHGC of no greater than 0.26 as determined according to NFRC 200.
   3. Condensation Resistance: Fixed glazing and framing areas as a system shall have an NFRC-certified condensation resistance rating of no less than 75 as determined according to NFRC 500.
   4. Outdoor-Indoor Transmission Class: Minimum 26.

J. Thermal Movements: Allow for thermal movements resulting from ambient and surface temperature changes.
   1. Allow for thermal movements resulting from the following maximum change (range) in ambient and surface temperatures:
      a. a. Temperature Change (Range): 0 deg F (-18 deg C); 180 deg F (82 deg C).
      b. b. Test Interior Ambient-Air Temperature: .
      c. c. Test Performance: No buckling; stress on glass; sealant failure; excess stress on framing, anchors, and fasteners; or reduction of performance when tested according to AAMA 501.5 for a minimum 3 cycles.

2.03 STOREFRONT SYSTEMS

A. Thermal Barrier (Trifab™ VG 451UT):
   1. 1. Kawneer IsoLock™ Thermal Break with a 1/4" (6.4 mm) separation consisting of a two-part chemically curing, high-density polyurethane, which is mechanically and adhesively joined to aluminum storefront sections.
   2. a. Thermal Break shall be designed in accordance with AAMA TIR-A8 and tested in accordance with AAMA 505.

B. Brackets and Reinforcements: Manufacturer's standard high-strength aluminum with non-staining, nonferrous shims for aligning system components.

C. Fasteners and Accessories: Manufacturer's standard corrosion-resistant, non-staining, nonbleeding fasteners and accessories compatible with adjacent materials. Where exposes shall be stainless steel.

D. Perimeter Anchors: When steel anchors are used, provide insulation between steel material and aluminum material to prevent galvanic action

E. Packing, Shipping, Handling and Unloading: Deliver materials in manufacturer's original, unopened, undamaged containers with identification labels intact.

F. Storage and Protection: Store materials protected from exposure to harmful weather conditions. Handle storefront material and components to avoid damage. Protect storefront material against damage from elements, construction activities, and other hazards before, during and after storefront installation. Framing Members: Manufacturer's extruded- or formed-aluminum framing members of thickness required and reinforced as required to support imposed loads.
   1. Exterior Framing Construction: Thermally broken.
   2. Interior Vestibule Framing Construction: Non-thermal.
   3. Glazing System: Retained mechanically with gaskets on four sides.
   4. Glazing Plane: Center.
   5. Finish: Class I color anodized.
      a. Factory finish all surfaces that will be exposed in completed assemblies.
      b. Touch-up surfaces cut during fabrication so that no natural aluminum is visible in completed assemblies, including joint edges.
      c. Coat concealed metal surfaces that will be in contact with cementitious materials or dissimilar metals with bituminous paint.
   6. Finish Color: Dark bronze.
   7. Fabrication Method: Field-fabricated stick system.
   8. Aluminum: Alloy and temper recommended by manufacturer for type of use and finish indicated.
   9. Steel Reinforcement: As required by manufacturer.

G. Backer Plates: Manufacturer's standard, continuous backer plates for framing members, if not integral, where framing abuts adjacent construction.

H. Brackets and Reinforcements: Manufacturer's standard high-strength aluminum with nonstaining, nonferrous shims for aligning system components.

2.04 GLAZING

A. Glazing: Comply with Section 088000 "Glazing."

B. Glazing Gaskets: Manufacturer's standard sealed-corner pressure-glazing system of Manufacturer's standard compression types; replaceable, extruded EPDM rubber, setting blocks, and shims or spacers.

C. Glazing Sealants: As recommended by manufacturer.

D. Weatherseal Sealants: ASTM C 920 for Type S; Grade NS; Class 25; Uses NT, G, A, and O; chemically curing silicone formulation that is compatible with structural sealant and other system components with which it comes in contact; recommended by structural-sealant, weatherseal-sealant, and structural-sealant-glazed storefront manufacturers for this use.

2.05 MATERIALS

A. Aluminum Extrusions: Alloy and temper recommended by aluminum storefront manufacturer for strength, corrosion resistance, and application of required finish and not less than 0.070" (1.8 mm) wall thickness at any location for the main frame and complying with ASTM B 221: 6063-T6 alloy and temper.

B. Fasteners: Aluminum, nonmagnetic stainless steel or other materials to be non-corrosive and compatible with aluminum framing members, trim hardware, anchors, and other components.

C. Anchors, Clips, and Accessories: Aluminum, nonmagnetic stainless steel, or zinc-coated steel or iron complying with ASTM B 633 for SC 3 severe service conditions or other suitable zinc coating; provide sufficient strength to withstand design pressure indicated.

D. Reinforcing Members: Aluminum, nonmagnetic stainless steel, or nickel/chrome-plated steel complying with ASTM B 456 for Type SC 3 severe service conditions, or zinc-coated steel or iron complying with ASTM B 633 for SC 3 severe service conditions or other suitable zinc coating; provide sufficient strength to withstand design pressure indicated.

E. Sealant: For sealants required within fabricated storefront system, provide permanently elastic, non-shrinking, and non-migrating type recommended by sealant manufacturer for joint size and movement.

F. Tolerances: Reference to tolerances for wall thickness and other cross-sectional dimensions of storefront members are nominal and in compliance with AA Aluminum Standards and Data. Sheet and Plate: ASTM B 209 (ASTM B 209M).

G. Extruded Bars, Rods, Profiles, and Tubes: ASTM B 221 (ASTM B 221M).

H. Extruded Structural Pipe and Tubes: ASTM B 429/B 429M.

I. Structural Profiles: ASTM B 308/B 308M.

J. Steel Reinforcement:
   1. Structural Shapes, Plates, and Bars: ASTM A 36/A 36M.
   2. Cold-Rolled Sheet and Strip: ASTM A 1008/A 1008M.
   3. Hot-Rolled Sheet and Strip: ASTM A 1011/A 1011M.
   4. Primer: Manufacturer's standard zinc-rich, corrosion-resistant primer complying with SSPC-PS Guide No. 12.00; applied immediately after surface preparation and pretreatment. Select surface preparation methods according to recommendations in SSPC-SP COM, and prepare surfaces according to applicable SSPC standard.

2.06 ACCESSORIES

A. Fasteners and Accessories: Manufacturer's standard corrosion-resistant, non-staining, nonbleeding fasteners and accessories compatible with adjacent materials.
   1. Use self-locking devices where fasteners are subject to loosening or turning out from thermal and structural movements, wind loads, or vibration.
   2. Reinforce members as required to receive fastener threads.
   3. Use exposed fasteners with countersunk Phillips screw heads, finished to match framing system.

B. Window Shadow Boxes: Flat bar or cut sheet alloy and temper recommended by aluminum storefront manufacturer for strength, corrosion resistance, and application of required finish and not less than 0.1443" (3.67 mm) wall thickness at any location for the main frame and complying with ASTM B 221: 6063-T6 alloy and temper.
   1. Weld corners even an such that no grinding is necessary.
   2. Slope at head and sill are to be parallel at a maximum slope of 1%.
   3. Side pieces are to be square and plumb at leading edge. Top and bottom edge are to be sloped.
   4. Affix completed box to opening prior to window installation.

C. Anchors: Three-way adjustable anchors with minimum adjustment of 1 inch (25.4 mm) that accommodate fabrication and installation tolerances in material and finish compatible with

adjoining materials and recommended by manufacturer.

1. Concrete and Masonry Inserts: Hot-dip galvanized cast-iron, malleable-iron, or steel inserts complying with ASTM A 123/A 123M or ASTM A 153/A 153M requirements.

D. Concealed Flashing: Dead-soft, 0.018-inch- (0.457-mm-) thick stainless steel, complying with ASTM A 240/A 240M, of type recommended by manufacturer.

E. Bituminous Paint: Cold-applied asphalt-mastic paint containing no asbestos, formulated for 30-mil (0.762-mm) thickness per coat.

F. Rigid PVC Filler.

2.07 FABRICATION

A. Form or extrude aluminum shapes before finishing.

B. Weld in concealed locations to greatest extent possible to minimize distortion or discoloration of finish. Remove weld spatter and welding oxides from exposed surfaces by descaling or grinding.

C. Fabricate components that, when assembled, have the following characteristics:

1. Profiles that are sharp, straight, and free of defects or deformations.
2. Accurately fitted joints with ends coped or mitered.
3. Physical and thermal isolation of glazing from framing members.
4. Accommodations for thermal and mechanical movements of glazing and framing to maintain required glazing edge clearances.
5. Provisions for field replacement of glazing from interior.
6. Fasteners, anchors, and connection devices that are concealed from view to greatest extent possible.

D. Mechanically Glazed Framing Members: Fabricate for flush glazing without projecting stops.

E. Structural-Sealant-Glazed Framing Members: Include accommodations for using temporary support device to retain glazing in place while structural sealant cures.

F. After fabrication, clearly mark components to identify their locations in Project according to Shop Drawings.

2.08 ALUMINUM FINISHES

A. Class I Color Anodized Finish: AAMA 611 AA-M12C22A44 Electrolytically deposited colored anodic coating not less than 0.7 mils (0.018 mm) thick.

2.09 SOURCE QUALITY CONTROL

A. Structural Sealant: Perform quality-control procedures complying with ASTM C 1401 recommendations, including, but not limited to, assembly material qualification procedures, sealant testing, and assembly fabrication reviews and checks.

PART 3 EXECUTION

3.01 EXAMINATION

A. Examine areas, with Installer present, for compliance with requirements for installation tolerances and other conditions affecting performance of the Work.

B. Proceed with installation only after unsatisfactory conditions have been corrected.

3.02 PREPARATION

A. Prepare surfaces that are in contact with structural sealant according to sealant manufacturer's written instructions, to ensure compatibility and adhesion. Preparation includes, but is not limited to, cleaning and priming surfaces.

3.03 INSTALLATION

A. General:

1. Comply with manufacturer's written instructions.
2. Do not install damaged components.

3. Fit joints to produce hairline joints free of burrs and distortion.
4. Rigidly secure non-movement joints.
5. Install anchors with separators and isolators to prevent metal corrosion and electrolytic deterioration and to prevent impeding movement of moving joints.
6. Seal perimeter and other joints watertight unless otherwise indicated.

B. Metal Protection:
1. Where aluminum is in contact with dissimilar metals, protect against galvanic action by painting contact surfaces with materials recommended by manufacturer for this purpose or by installing nonconductive spacers.
2. Where aluminum is in contact with concrete or masonry, protect against corrosion by painting contact surfaces with bituminous paint.

C. Set continuous sill members and flashing in full sealant bed, as specified in Section 079200 "Joint Sealants," to produce weathertight installation.

D. Install components plumb and true in alignment with established lines and grades.

E. Install operable units level and plumb, securely anchored, and without distortion. Adjust weather-stripping contact and hardware movement to produce proper operation.

F. Install glazing as specified in Section 088000 "Glazing."

G. Install weather-seal sealant according to Section 079200 "Joint Sealants" and according to sealant manufacturer's written instructions to produce weatherproof joints. Install joint filler behind sealant as recommended by sealant manufacturer.

3.04 ERECTION TOLERANCES

A. Erection Tolerances: Install aluminum-framed storefronts to comply with the following maximum tolerances:
1. Plumb: 1/8 inch in 10 feet (3.2 mm in 3 m); 1/4 inch in 40 feet (6.35 mm in 12.2 m).
2. Level: 1/8 inch in 20 feet (3.2 mm in 6 m); 1/4 inch in 40 feet (6.35 mm in 12.2 m).
3. Alignment:
a. Where surfaces abut in line or are separated by reveal or protruding element up to 1/2 inch (12.7 mm) wide, limit offset from true alignment to 1/16 inch (1.6 mm).
b. Where surfaces are separated by reveal or protruding element from 1/2 to 1 inch (12.7 to 25.4 mm) wide, limit offset from true alignment to 1/8 inch (3.2 mm).
c. Where surfaces are separated by reveal or protruding element of 1 inch (25.4 mm) wide or more, limit offset from true alignment to 1/4 inch (6 mm).
4. Location: Limit variation from plane to 1/8 inch in 12 feet (3.2 mm in 3.6 m); 1/2 inch (12.7 mm) over total length.

3.05 FIELD QUALITY CONTROL

A. Testing Agency: Owner will engage a qualified testing agency to perform tests and inspections.

B. Field Quality-Control Testing: Perform the following test on representative areas of aluminum-framed storefronts.
1. In accordance with Section 019117 Functional Performance Testing.

C. Aluminum-framed storefronts will be considered defective if they do not pass tests and inspections.

D. Prepare test and inspection reports.

END OF SECTION 084313

SECTION 087100
DOOR HARDWARE

PART 1 GENERAL

1.01 REFERENCE STANDARDS

A. ASTM B117 - Standard Practice for Operating Salt Spray (Fog) Apparatus; 2019.

B. BHMA A156.1 - Standard for Butts and Hinges; 2021.

C. BHMA A156.2 - Bored and Preassembled Locks and Latches; 2022.

D. BHMA A156.3 - Exit Devices; 2020.

E. BHMA A156.4 - Door Closers and Pivots; 2024.

F. BHMA A156.19 - Power Assist and Low Energy Power Operated Swinging Doors; 2019.

G. BHMA A156.26 - Standard for Continuous Hinges; 2021.

H. BHMA A156.28 - Standard for Recommended Practices for Mechanical Keying Systems; 2023.

I. BHMA A156.31 - Electric Strikes and Frame Mounted Actuators; 2024.

J. ISO 9000 - Quality Management Systems -- Fundamentals and Vocabulary; 2015.

K. NFPA 70 - National Electrical Code; Most Recent Edition Adopted by Authority Having Jurisdiction, Including All Applicable Amendments and Supplements.

L. NFPA 80 - Standard for Fire Doors and Other Opening Protectives; 2022.

M. NFPA 101 - Life Safety Code; Most Recent Edition Adopted by Authority Having Jurisdiction, Including All Applicable Amendments and Supplements.

N. NFPA 105 - Standard for Smoke Door Assemblies and Other Opening Protectives; 2022.

O. NFPA 252 - Standard Methods of Fire Tests of Door Assemblies; 2022.

P. UL 10B - Standard for Fire Tests of Door Assemblies; Current Edition, Including All Revisions.

Q. UL 10C - Standard for Positive Pressure Fire Tests of Door Assemblies; Current Edition, Including All Revisions.

R. UL 305 - Standard for Panic Hardware; Current Edition, Including All Revisions.

S. UL 1784 - Standard for Air Leakage Tests of Door Assemblies; Current Edition, Including All Revisions.

T. WDMA I.S. 1A - Interior Architectural Wood Flush Doors; 2021, with Errata (2022).

1.02 SUMMARY

A. Section includes:
   1. Mechanical and electrified door hardware
   2. Electronic access control system components

B. Section excludes:
   1. Windows
   2. Cabinets (casework), including locks in cabinets
   3. Signage
   4. Toilet accessories
   5. Overhead doors

C. Related Sections:
   1. Division 01 "General Requirements" sections for Allowances, Alternates, Owner Furnished Contractor Installed, Project Management and Coordination.
   2. Division 06 Section "Rough Carpentry"
   3. Division 06 Section "Finish Carpentry"
   4. Division 07 Section "Joint Sealants" for sealant requirements applicable to threshold installation specified in this section.

5. Division 08 Sections:
    a. "Metal Doors and Frames"
    b. "Flush Wood Doors"
    c. "Interior Aluminum Doors and Frames"
    d. "Aluminum-Framed Entrances and Storefronts"
6. Division 26 feet (792.48 cm)'Electrical" sections for connections to electrical power system and for low-voltage wiring.
7. Division 28 feet (853.44 cm)'Electronic Safety and Security" sections for coordination with other components of electronic access control system and fire alarm system.

1.03 REFERENCES

A. UL LLC
1. UL 10B - Fire Test of Door Assemblies
2. UL 10C - Positive Pressure Test of Fire Door Assemblies
3. UL 1784 - Air Leakage Tests of Door Assemblies
4. UL 305 - Panic Hardware

B. DHI - Door and Hardware Institute
1. Sequence and Format for the Hardware Schedule
2. Recommended Locations for Builders Hardware
3. Keying Systems and Nomenclature
4. Installation Guide for Doors and Hardware

C. NFPA – National Fire Protection Association
1. NFPA 70 – National Electric Code
2. NFPA 80 – 2016 Edition – Standard for Fire Doors and Other Opening Protectives
3. NFPA 101 – Life Safety Code
4. NFPA 105 – Smoke and Draft Control Door Assemblies
5. NFPA 252 – Fire Tests of Door Assemblies

D. ANSI - American National Standards Institute
1. ANSI A117.1 – 2017 Edition – Accessible and Usable Buildings and Facilities
2. ANSI/BHMA A156.1 - A156.29, and ANSI/BHMA A156.31 - Standards for Hardware and Specialties
3. ANSI/BHMA A156.28 - Recommended Practices for Keying Systems
4. ANSI/WDMA I.S. 1A - Interior Architectural Wood Flush Doors
5. ANSI/SDI A250.8 - Standard Steel Doors and Frames

1.04 SUBMITTALS

A. General:
1. Submit in accordance with Conditions of Contract and Division 01 Submittal Procedures.
2. Prior to forwarding submittal:
    a. Review drawings and Sections from related trades to verify compatibility with specified hardware.
    b. Highlight, encircle, or otherwise specifically identify on submittals: deviations from Contract Documents, issues of incompatibility or other issues which may detrimentally affect the Work.

B. Action Submittals:
1. Product Data: Submit technical product data for each item of door hardware, installation instructions, maintenance of operating parts and finish, and other information necessary to show compliance with requirements.
2. Riser and Wiring Diagrams: After final approval of hardware schedule, submit details of electrified door hardware, indicating:
    a. Wiring Diagrams: For power, signal, and control wiring and including:
        1) Details of interface of electrified door hardware and building safety and security systems.

2) Schematic diagram of systems that interface with electrified door hardware.
3) Point-to-point wiring.
4) Risers.

3. Samples for Verification: If requested by Architect, submit production sample of requested door hardware unit in finish indicated and tagged with full description for coordination with schedule.
   a. Samples will be returned to supplier. Units that are acceptable to Architect may, after final check of operations, be incorporated into Work, within limitations of key coordination requirements.
4. Door Hardware Schedule:
   a. Submit concurrent with submissions of Product Data, Samples, and Shop Drawings. Coordinate submission of door hardware schedule with scheduling requirements of other work to facilitate fabrication of other work critical in Project construction schedule.
   b. Submit under direct supervision of a Door Hardware Institute (DHI) certified Architectural Hardware Consultant (AHC) or Door Hardware Consultant (DHC) with hardware sets in vertical format as illustrated by Sequence of Format for the Hardware Schedule published by DHI.
   c. Indicate complete designations of each item required for each opening, include:
      1) Door Index: door number, heading number, and Architect's hardware set number.
      2) Quantity, type, style, function, size, and finish of each hardware item.
      3) Name and manufacturer of each item.
      4) Fastenings and other pertinent information.
      5) Location of each hardware set cross-referenced to indications on Drawings.
      6) Explanation of all abbreviations, symbols, and codes contained in schedule.
      7) Mounting locations for hardware.
      8) Door and frame sizes and materials.
      9) Degree of door swing and handing.
      10) Operational Description of openings with electrified hardware covering egress, ingress (access), and fire/smoke alarm connections.

C. Informational Submittals:
   1. Provide Qualification Data for Supplier, Installer and Architectural Hardware Consultant.
   2. Provide Product Data:
      a. Certify that door hardware approved for use on types and sizes of labeled fire-rated doors complies with listed fire-rated door assemblies.
      b. Include warranties for specified door hardware.

D. Closeout Submittals:
   1. Operations and Maintenance Data: Provide in accordance with Division 01 and include:
      a. Complete information on care, maintenance, and adjustment; data on repair and replacement parts, and information on preservation of finishes.
      b. Catalog pages for each product.
      c. Final approved hardware schedule edited to reflect conditions as installed.
      d. Final keying schedule
      e. Copy of warranties including appropriate reference numbers for manufacturers to identify project.
      f. As-installed wiring diagrams for each opening connected to power, both low voltage and 110 volts.

E. Inspection and Testing:
   1. Submit written reports to the Owner and Authority Having Jurisdiction (AHJ) of the results of functional testing and inspection for:
      a. Fire door assemblies, in compliance with NFPA 80.
      b. Required egress door assemblies, in compliance with NFPA 101.

1.05 QUALITY ASSURANCE

A. Qualifications and Responsibilities:
   1. Supplier: Recognized architectural hardware supplier with a minimum of 5 years documented experience supplying both mechanical and electromechanical door hardware similar in quantity, type, and quality to that indicated for this Project. Supplier to be recognized as a factory direct distributor by the manufacturer of the primary materials with a warehousing facility in the Project's vicinity. Supplier to have on staff, a certified Architectural Hardware Consultant (AHC) or Door Hardware Consultant (DHC) available to Owner, Architect, and Contractor, at reasonable times during the Work for consultation.
   2. Installer: Qualified tradesperson skilled in the application of commercial grade hardware with experience installing door hardware similar in quantity, type, and quality as indicated for this Project.
   3. Architectural Hardware Consultant: Person who is experienced in providing consulting services for door hardware installations that are comparable in material, design, and extent to that indicated for this Project and meets these requirements:
      a. For door hardware: DHI certified AHC or DHC.
      b. Can provide installation and technical data to Architect and other related subcontractors.
      c. Can inspect and verify components are in working order upon completion of installation.
      d. Capable of producing wiring diagram and coordinating installation of electrified hardware with Architect and electrical engineers.
   4. Single Source Responsibility: Obtain each type of door hardware from single manufacturer.

B. Certifications:
   1. Fire-Rated Door Openings:
      a. Provide door hardware for fire-rated openings that complies with NFPA 80 and requirements of authorities having jurisdiction.
      b. Provide only items of door hardware that are listed products tested by UL LLC, Intertek Testing Services, or other testing and inspecting organizations acceptable to authorities having jurisdiction for use on types and sizes of doors indicated, based on testing at positive pressure and according to NFPA 252 or UL 10C and in compliance with requirements of fire-rated door and door frame labels.
   2. Smoke and Draft Control Door Assemblies:
      a. Provide door hardware that meets requirements of assemblies tested according to UL 1784 and installed in compliance with NFPA 105
      b. Comply with the maximum air leakage of 0.3 cfm/sq. ft. (3 cu. m per minute/sq. m) at tested pressure differential of 0.3-inch wg (75 Pa) of water.
   3. Electrified Door Hardware
      a. Listed and labeled as defined in NFPA 70, Article 100, by testing agency acceptable to authorities having jurisdiction.
   4. Accessibility Requirements:
      a. Comply with governing accessibility regulations cited in "REFERENCES" article 087100, 1.02.D3 herein for door hardware on doors in an accessible route. This project must comply with all Federal Americans with Disability Act regulations and all Local Accessibility Regulations.

C. Pre-Installation Meetings
   1. Pre-installation Conference
      a. Review and finalize construction schedule and verify availability of materials, Installer's personnel, equipment, and facilities needed to make progress and avoid delays.
      b. Inspect and discuss preparatory work performed by other trades.
      c. Inspect and discuss electrical roughing-in for electrified door hardware.

d. Review sequence of operation for each type of electrified door hardware.
e. Review required testing, inspecting, and certifying procedures.
f. Review questions or concerns related to proper installation and adjustment of door hardware.

2. Electrified Hardware Coordination Conference:
   a. Prior to ordering electrified hardware, schedule and hold meeting to coordinate door hardware with security, electrical, doors and frames, and other related suppliers.

1.06 DELIVERY, STORAGE, AND HANDLING

A. Inventory door hardware on receipt and provide secure lock-up for hardware delivered to Project site. Promptly replace products damaged during shipping.

B. Tag each item or package separately with identification coordinated with final door hardware schedule, and include installation instructions, templates, and necessary fasteners with each item or package. Deliver each article of hardware in manufacturer's original packaging.

C. Maintain manufacturer-recommended environmental conditions throughout storage and installation periods.

D. Provide secure lock-up for door hardware delivered to Project. Control handling and installation of hardware items so that completion of Work will not be delayed by hardware losses both before and after installation.

E. Handle hardware in manner to avoid damage, marring, or scratching. Correct, replace or repair products damaged during Work. Protect products against malfunction due to paint, solvent, cleanser, or any chemical agent.

F. Deliver keys to manufacturer of key control system for subsequent delivery to Owner.

1.07 COORDINATION

A. Coordinate layout and installation of floor-recessed door hardware with floor construction. Cast anchoring inserts into concrete.

B. Installation Templates: Distribute for doors, frames, and other work specified to be factory or shop prepared. Check Shop Drawings of other work to confirm that adequate provisions are made for locating and installing door hardware to comply with indicated requirements.

C. Security: Coordinate installation of door hardware, keying, and access control with Owner's security consultant.

D. Electrical System Roughing-In: Coordinate layout and installation of electrified door hardware with connections to power supplies and building safety and security systems.

1.08 WARRANTY

A. Manufacturer's standard form in which manufacturer agrees to repair or replace components of door hardware that fail in materials or workmanship within published warranty period.
   1. Warranty does not cover damage or faulty operation due to improper installation, improper use or abuse.
   2. Warranty Period: Beginning from date of Substantial Completion, for durations indicated in manufacturer's published listings.
      a. Mechanical Warranty
         1) Locks
            (a) 10 years
         2) Exit Devices
            (a) 10 years
         3) Closers
            (a) 30 years
         4) Automatic Operators
            (a) LCN: 2 years

1.09 MAINTENANCE

A. Furnish complete set of special tools required for maintenance and adjustment of hardware, including changing of cylinders.

B. Turn over unused materials to Owner for maintenance purposes.

PART 2 PRODUCTS

2.01 MANUFACTURERS

A. Approval of alternate manufacturers and/or products other than those listed as "Scheduled Manufacturer" or "Acceptable Manufacturers" in the individual article for the product category are only to be considered by official substitution request in accordance with section 01 25 00.

B. Approval of products from manufacturers indicated in "Acceptable Manufacturers" is contingent upon those products providing all functions and features and meeting all requirements of scheduled manufacturer's product.

C. Where specified hardware is not adaptable to finished shape or size of members requiring hardware, furnish suitable types having same operation and quality as type specified, subject to Architect's approval.

2.02 MATERIALS

A. Fabrication
   1. Provide door hardware manufactured to comply with published templates generally prepared for machine, wood, and sheet metal screws. provide screws according to manufacturer’s recognized installation standards for application intended.
   2. Finish exposed screws to match hardware finish, or, if exposed in surfaces of other work, to match finish of this other work including prepared for paint surfaces to receive painted finish.
   3. Provide concealed fasteners wherever possible for hardware units exposed when door is closed. Coordinate with “Metal Doors and Frames”, “Flush Wood Doors”, “Stile and Rail Wood Doors” to ensure proper reinforcements. Advise the Architect where visible fasteners, such as thru bolts, are required.

B. Provide screws, bolts, expansion shields, drop plates and other devices necessary for hardware installation.
   1. Where fasteners are exposed to view: Finish to match adjacent door hardware material.

C. Cable and Connectors:
   1. Where scheduled in the hardware sets, provide each item of electrified hardware and wire harnesses with number and gage of wires enough to accommodate electric function of specified hardware.
   2. Provide Molex connectors that plug directly into connectors from harnesses, electric locking and power transfer devices.
   3. Provide through-door wire harness for each electrified locking device installed in a door and wire harness for each electrified hinge, electrified continuous hinge, electrified pivot, and electric power transfer for connection to power supplies.

2.03 HINGES

A. Manufacturers and Products:
   1. Scheduled Manufacturer and Product:
      a. Ives 5BB series
   2. Acceptable Manufacturers and Products:
      a. Hager BB1191/1279 series
      b. McKinney TB series
      c. Best FBB series

B. Requirements:
   1. Provide hinges conforming to ANSI/BHMA A156.1.

2. Provide five knuckle, ball bearing hinges.
3. 1-3/4 inch (44 mm) thick doors, up to and including 36 inches (914.4 mm) wide:
   a. Exterior: Standard weight, bronze or stainless steel, 4-1/2 inches (114 mm) high
   b. Interior: Standard weight, steel, 4-1/2 inches (114 mm) high
4. 1-3/4 inch (44 mm) thick doors over 36 inches (914.4 mm) wide:
   a. Exterior: Heavy weight, bronze/stainless steel, 5 inches (127 mm) high
   b. Interior: Heavy weight, steel, 5 inches (127 mm) high
5. 2 inches (50.8 mm) or thicker doors:
   a. Exterior: Heavy weight, bronze or stainless steel, 5 inches (127 mm) high
   b. Interior: Heavy weight, steel, 5 inches (127 mm) high
6. Adjust hinge width for door, frame, and wall conditions to allow proper degree of opening.
7. Provide three hinges per door leaf for doors 90 inches (2286 mm) or less in height, and one additional hinge for each 30 inches (762 mm) of additional door height.
8. Hinge Pins: Except as otherwise indicated, provide hinge pins as follows:
   a. Steel Hinges: Steel pins
   b. Non-Ferrous Hinges: Stainless steel pins
   c. Out-Swinging Exterior Doors: Non-removable pins
   d. Out-Swinging Interior Lockable Doors: Non-removable pins
   e. Interior Non-lockable Doors: Non-rising pins
9. Provide hinges with electrified options as scheduled in the hardware sets. Provide with number and gage of wires enough to accommodate electric function of specified hardware. Locate electric hinge at second hinge from bottom or nearest to electrified locking component. Provide mortar guard for each electrified hinge specified.

2.04 CONTINUOUS HINGES

A. Manufacturers:
   1. Scheduled Manufacturer:
      a. Ives
   2. Acceptable Manufacturers:
      a. Select
      b. Best
      c. Roton
      d. ABH
      e. Hager

B. Requirements:
   1. Provide aluminum geared continuous hinges conforming to ANSI/BHMA A156.26, Grade 1.
   2. Provide aluminum geared continuous hinges, where specified in the hardware sets, fabricated from 6063-T6 aluminum.
   3. Provide split nylon bearings at each hinge knuckle for quiet, smooth, self-lubricating operation.
   4. Provide hinges capable of supporting door weights up to 450 pounds, and successfully tested for 1,500,000 cycles.
   5. On fire-rated doors, provide aluminum geared continuous hinges classified for use on rated doors by testing agency acceptable to authority having jurisdiction.
   6. Provide aluminum geared continuous hinges with electrified option scheduled in the hardware sets. Provide with number and gage of wires enough to accommodate electric function of specified hardware.
   7. Provide hinges 1 inch (25.4 mm) shorter in length than nominal height of door, unless otherwise noted or door details require shorter length and with symmetrical hole pattern.

2.05 CYLINDRICAL LOCKS – GRADE 1

A. Manufacturers and Products:
   1. Scheduled Manufacturer and Product:

a. Schlage ND series With Indicator

B. Requirements:
1. Provide cylindrical locks conforming to ANSI/BHMA A156.2 Series 4000, Grade 1, and UL Listed for 3-hour fire doors.
2. Indicators: Where specified, provide escutcheon with lock status indicator window on top of lockset rose:
a. Escutcheon height (including rose) 6.05 inches (153.67 mm) high by 3.68 inches (93.47 mm) wide.
b. Indicator window measuring a minimum 3.52-inch by .60 inch (15.24 mm) with 1.92 square-inches of front facing viewing area and 180-degree visibility with a total of .236 square-inches of total viewable area.
c. Provide snap-in serviceable window to prevent tampering. Lock must function if indicator is compromised.
d. Provide messages color-coded with full text and symbol, as scheduled, for easy visibility.
e. Unlocked and Unoccupied message will display on white background, and Locked and Occupied message will display on red background.
3. Cylinders: Refer to "KEYING" article, herein.
4. Provide locks with standard 2-3/4 inches (70 mm) backset, unless noted otherwise, with 1/2-inch latch throw. Provide proper latch throw for UL listing at pairs.
5. Provide locksets with separate anti-rotation thru-bolts, and no exposed screws.
6. Provide independently operating levers with two external return spring cassettes mounted under roses to prevent lever sag.
7. Provide standard ASA strikes unless extended lip strikes are necessary to protect trim.
8. Provide electrified options as scheduled in the hardware sets.
9. Lever Trim: Solid cast levers without plastic inserts and wrought roses on both sides.
a. Provide levers that return to within 1/2 inch (12.7 mm) of door face.
b. Vandlgard: Provide levers with vandal resistant technology for use at heavy traffic or abusive applications.
c. Lever Design: Rhodes

2.06 CYLINDRICAL LOCKS – GRADE 1

A. Manufacturers and Products:
1. Scheduled Manufacturer and Product:
a. Best 9K series (Owner Preference)

B. Requirements:
1. Provide cylindrical locks conforming to ANSI/BHMA A156.2 Series 4000, Grade 1, and UL Listed for 3-hour fire doors.
2. Cylinders: Refer to "KEYING" article, herein.
3. Provide locks with standard 2-3/4 inches (70 mm) backset, unless noted otherwise, with 1/2-inch latch throw. Provide proper latch throw for UL listing at pairs.
4. Provide locksets with separate anti-rotation thru-bolts, and no exposed screws.
5. Provide independently operating levers with two external return spring cassettes mounted under roses to prevent lever sag.
6. Provide standard ASA strikes unless extended lip strikes are necessary to protect trim.
7. Provide electrified options as scheduled in the hardware sets.
8. Lever Trim: Solid cast levers without plastic inserts and wrought roses on both sides.
a. Provide levers that return to within 1/2 inch (12.7 mm) of door face.
b. Lever Design: 15

2.07 EXIT DEVICES

A. Manufacturers and Products:
1. Scheduled Manufacturer and Product:
a. Von Duprin 78/75A series

2. Acceptable Manufacturers and Products:
   a. Precision 2100 Series
   b. Sargent PE80Series Series

B. Requirements
1. Provide exit devices tested to ANSI/BHMA A156.3 Grade 1 and UL listed for Panic Exit or Fire Exit Hardware with manufacturer's approved strikes.
2. Cylinders: Refer to "KEYING" article, herein.
3. Provide exit devices with deadlatching feature for security and for future addition of alarm kits and/or other electrified requirements. No plastic inserts are allowed in touchpads.
4. Provide exit devices cut to door width and height. Install exit devices at height recommended by exit device manufacturer, allowable by governing building codes, and approved by Architect. Touchpad must extend a minimum of one half of door width.
5. Mount mechanism case flush on face of doors or provide spacers to fill gaps behind devices. Where glass trim or molding projects off face of door, provide glass bead kits.
6. Removable Mullions: 2 inches (50.8 mm) x 3 inches (76.2 mm) steel tube. Where scheduled as keyed removable mullion, provide type that can be removed by use of a keyed cylinder, which is self-locking when re-installed.
7. Provide factory drilled weep holes for exit devices used in full exterior application, highly corrosive areas, and where noted in hardware sets.
8. Provide electrified options as scheduled.
9. Top latch mounting: double- or single-tab mount for steel doors, face mount for aluminum doors eliminating requirement of tabs, and double tab mount for wood doors.
10. Provide exit devices with optional trim designs to match other lever and pull designs used on the project.

2.08 ELECTRIC STRIKES

A. Manufacturers and Products:
1. Scheduled Manufacturer and Product:
   a. HES 9600 / 1500 (Owner Preference)

B. Requirements:
1. Provide electric strikes designed for use with type of locks shown at each opening.
2. Provide electric strikes UL Listed as burglary resistant that are tested to a minimum endurance test of 1,000,000 cycles.
3. Where required, provide electric strikes UL Listed for fire doors and frames.
4. Provide transformers and rectifiers for each strike as required. Verify voltage with electrical contractor.

2.09 CYLINDERS

A. Manufacturers:
1. Scheduled Manufacturer and Product:
   a. SFIC Provided and installed by owner
2. Acceptable Manufacturers and Products:

B. Requirements:
1. Provide cylinders/cores to match Owner's existing key system, compliant with ANSI/BHMA A156.5; latest revision; cylinder face finished to match lockset, manufacturer's series as indicated. Refer to "KEYING" article, herein.

2.10 DOOR CLOSERS

A. Manufacturers and Products:
1. Scheduled Manufacturer and Product:
   a. LCN 4040XP series (Owner Preference)

B. Requirements:

1. Provide door closers conforming to ANSI/BHMA A156.4 Grade 1 requirements by BHMA certified independent testing laboratory. ISO 9000 certify closers. Stamp units with date of manufacture code.
2. Provide door closers with fully hydraulic, full rack and pinion action with high strength cast iron cylinder, and full complement bearings at shaft.
3. Cylinder Body: 1-1/2-inch (1.5 inch (38 mm)) diameter piston with 5/8-inch (0.63 inch (16 mm)) diameter double heat-treated pinion journal. QR code with a direct link to maintenance instructions.
4. Hydraulic Fluid: Fireproof, passing requirements of UL10C, and requiring no seasonal closer adjustment for temperatures ranging from 120 degrees Fahrenheit (48.89 degrees Celsius) to -30 degrees Fahrenheit (-1.11 degrees Celsius).
5. Spring Power: Continuously adjustable over full range of closer sizes, and providing reduced opening force as required by accessibility codes and standards. Provide snap-on cover clip, with plastic covers, that secures cover to spring tube.
6. Hydraulic Regulation: By tamper-proof, non-critical valves, with separate adjustment for latch speed, general speed, and backcheck. Provide graphically labelled instructions on the closer body adjacent to each adjustment valve. Provide positive stop on reg valve that prevents reg screw from being backed out.
7. Provide closers with solid forged steel main arms and factory assembled heavy-duty forged forearms for parallel arm closers.
8. Pressure Relief Valve (PRV) Technology: Not permitted.
9. Finish for Closer Cylinders, Arms, Adapter Plates, and Metal Covers: Powder coating finish which has been certified to exceed 100 hours salt spray testing as described in ANSI Standard A156.4 and ASTM B117, or has special rust inhibitor (SRI).
10. Provide special templates, drop plates, mounting brackets, or adapters for arms as required for details, overhead stops, and other door hardware items interfering with closer mounting.
11. Closers shall be capable of being upgraded by adding modular mechanical or electronic components in the field.

2.11 ELECTRO-HYDRAULIC AUTOMATIC OPERATORS

A. Manufacturers and Products:
   1. Scheduled Manufacturer and Product:
      a. LCN 4600 series (Owner Preference)

B. Requirements:
   1. Provide low energy automatic operator units with hydraulic closer complying with ANSI/BHMA A156.19.
   2. Hydraulic Fluid: Fireproof, passing requirements of UL10C, and requiring no seasonal closer adjustment for temperatures ranging from 120 degrees Fahrenheit (48.89 degrees Celsius) to -30 degrees Fahrenheit (-1.11 degrees Celsius).
   3. Provide units with conventional door closer opening and closing forces unless power operator motor is activated. Provide door closer assembly with adjustable spring size, back-check, and opening and closing speed adjustment valves to control door
   4. Provide units with on/off switch for manual operation, motor start up delay, vestibule interface delay, electric lock delay, and door hold open delay.
   5. Provide drop plates, brackets, and adapters for arms as required for details.
   6. Provide actuator switches and receivers for operation as specified.
   7. Provide weather-resistant actuators at exterior applications.
   8. Provide key switches with LED's, recommended and approved by manufacturer of automatic operator as required for function described in operation description of hardware group below. Cylinders: Refer to "KEYING" article, herein.
   9. Provide complete assemblies of controls, switches, power supplies, relays, and parts/material recommended and approved by manufacturer of automatic operator for each individual leaf. Actuators control both doors simultaneously at pairs. Sequence

operation of exterior and vestibule doors with automatic operators to allow ingress or egress through both sets of openings as directed by Architect. Locate actuators, key switches, and other controls as directed by Architect.

10. Provide units with vestibule inputs that allow sequencing operation of two units, and SPDT relay for interfacing with latching or locking devices.

2.12 PROTECTION PLATES

A. Manufacturers:
   1. Scheduled Manufacturer:
      a. Ives
   2. Acceptable Manufacturers:
      a. Burns
      b. Trimco
      c. Rockwood

B. Requirements:
   1. Provide protection plates with a minimum of 0.050 inch (1.27 mm) thick, beveled four edges as scheduled. Furnish with sheet metal or wood screws, finished to match plates.
   2. Sizes plates 2 inches (50.8 mm) less width of door on single doors, pairs of doors with a mullion, and doors with edge guards. Size plates 1 inch (25.4 mm) less width of door on pairs without a mullion or edge guards.
   3. At fire rated doors, provide protection plates over 16 inches (406.4 mm) high with UL label.

2.13 OVERHEAD STOPS AND OVERHEAD STOP/HOLDERS

A. Manufacturers:
   1. Scheduled Manufacturers:
      a. Glynn-Johnson
   2. Acceptable Manufacturers:
      a. Rixson
      b. Sargent
      c. ABH

B. Requirements:
   1. Provide overhead stop at any door where conditions do not allow for a wall stop or floor stop presents tripping hazard.

2.14 DOOR STOPS AND HOLDERS

A. Manufacturers:
   1. Scheduled Manufacturer:
      a. Ives
   2. Acceptable Manufacturers:
      a. Burns
      b. Trimco
      c. Rockwood

B. Provide door stops at each door leaf:
   1. Provide wall stops wherever possible. Provide concave type where lockset has a push button of thumbturn.
   2. Where a wall stop cannot be used, provide universal floor stops.
   3. Where wall or floor stop cannot be used, provide overhead stop.
   4. Provide roller bumper where doors open into each other and overhead stop cannot be used.

2.15 THRESHOLDS, SEALS, DOOR SWEEPS, AUTOMATIC DOOR BOTTOMS, AND GASKETING

A. Manufacturers:
   1. Scheduled Manufacturer:

a. Zero International
2. Acceptable Manufacturers:
a. National Guard
b. Reese
c. DHSI
d. Legacy
e. Pemko

B. Requirements:
1. Provide thresholds, weather-stripping, and gasketing systems as specified and per architectural details. Match finish of other items.
2. Smoke- and Draft-Control Door Assemblies: Where smoke- and draft-control door assemblies are required, provide door hardware that meets requirements of assemblies tested according to UL 1784 and installed in compliance with NFPA 105.
3. Provide door sweeps, seals, astragals, and auto door bottoms only of type where resilient or flexible seal strip is easily replaceable and readily available.
4. Size thresholds 1/2 inch (12.7 mm) high by 5 inches (127 mm) wide by door width unless otherwise specified in the hardware sets or detailed in the drawings.

2.16 DOOR POSITION SWITCHES

A. Manufacturers:
1. Scheduled Manufacturer:
a. Schlage
2. Acceptable Manufacturers:
a. GE-Interlogix
b. Sargent

B. Requirements:
1. Provide recessed or surface mounted type door position switches as specified.
2. Coordinate door and frame preparations with door and frame suppliers. If switches are being used with magnetic locking device, provide minimum of 4 inches (101.6 mm) between switch and magnetic locking device.

2.17 FINISHES

A. FINISH: BHMA 626/652 (US26D); EXCEPT:
1. Hinges at Exterior Doors: BHMA 630 (US32D)
2. Aluminum Geared Continuous Hinges: BHMA 628 (US28)
3. Push Plates, Pulls, and Push Bars: BHMA 630 (US32D)
4. Protection Plates: BHMA 630 (US32D)
5. Overhead Stops and Holders: BHMA 630 (US32D)
6. Door Closers: Powder Coat to Match
7. Wall Stops: BHMA 630 (US32D)
8. Latch Protectors: BHMA 630 (US32D)
9. Weatherstripping: Clear Anodized Aluminum
10. Thresholds: Mill Finish Aluminum

PART 3 EXECUTION

3.01 EXAMINATION

A. Prior to installation of hardware, examine doors and frames, with Installer present, for compliance with requirements for installation tolerances, labeled fire-rated door assembly construction, wall and floor construction, and other conditions affecting performance. Verify doors, frames, and walls have been properly reinforced for hardware installation.

B. Examine roughing-in for electrical power systems to verify actual locations of wiring connections before electrified door hardware installation.

C. Submit a list of deficiencies in writing and proceed with installation only after unsatisfactory conditions have been corrected.

3.02 INSTALLATION

A. Mount door hardware units at heights to comply with the following, unless otherwise indicated or required to comply with governing regulations.
   1. Standard Steel Doors and Frames: ANSI/SDI A250.8.
   2. Custom Steel Doors and Frames: HMMA 831.
   3. Interior Architectural Wood Flush Doors: ANSI/WDMA I.S. 1A
   4. Installation Guide for Doors and Hardware: DHI TDH-007-20

B. Install door hardware in accordance with NFPA 80, NFPA 101 and provide post-install inspection, testing as specified in section 1.03.E unless otherwise required to comply with governing regulations.

C. Install each hardware item in compliance with manufacturer's instructions and recommendations, using only fasteners provided by manufacturer.

D. Do not install surface mounted items until finishes have been completed on substrate. Protect all installed hardware during painting.

E. Set units level, plumb and true to line and location. Adjust and reinforce attachment substrate as necessary for proper installation and operation.

F. Drill and countersink units that are not factory prepared for anchorage fasteners. Space fasteners and anchors according to industry standards.

G. Install operating parts so they move freely and smoothly without binding, sticking, or excessive clearance.

H. Hinges: Install types and in quantities indicated in door hardware schedule but not fewer than quantity recommended by manufacturer for application indicated.

I. Wiring: Coordinate with Division 26, ELECTRICAL and Division 28 ELECTRONIC SAFETY AND SECURITY sections for:
   1. Conduit, junction boxes and wire pulls.
   2. Connections to and from power supplies to electrified hardware.
   3. Connections to fire/smoke alarm system and smoke evacuation system.
   4. Connection of wire to door position switches and wire runs to central room or area, as directed by Architect.
   5. Connections to panel interface modules, controllers, and gateways.
   6. Testing and labeling wires with Architect's opening number.

J. Key Control System: Tag keys and place them on markers and hooks in key control system cabinet, as determined by final keying schedule.

K. Continuous Hinges: Re-locate the door and frame fire rating labels where they will remain visible so that the hinge does not cover the label once installed.

L. Door Closers & Auto Operators: Mount closers/operators on room side of corridor doors, inside of exterior doors, and stair side of stairway doors from corridors. Mount closers/operators so they are not visible in corridors, lobbies and other public spaces unless approved by Architect.

M. Overhead Stops/Holders: Mount overhead stops/holders on room side of corridor doors, inside of exterior doors, and stair side of stairway doors.

N. Power Supplies: Locate power supplies as indicated or, if not indicated, above accessible ceilings or in equipment room, or alternate location as directed by Architect.

O. Thresholds: Set thresholds in full bed of sealant complying with requirements specified in Division 07 Section "Joint Sealants."

P. Stops: Provide floor stops for doors unless wall or other type stops are indicated in door hardware schedule. Do not mount floor stops where they may impede traffic or present tripping

hazard.

Q. Perimeter Gasketing: Apply to head and jamb, forming seal between door and frame.

R. Meeting Stile Gasketing: Fasten to meeting stiles, forming seal when doors are closed.

S. Door Bottoms and Sweeps: Apply to bottom of door, forming seal with threshold when door is closed.

3.03 ADJUSTING

A. Initial Adjustment: Adjust and check each operating item of door hardware and each door to ensure proper operation or function of every unit. Replace units that cannot be adjusted to operate as intended. Adjust door control devices to compensate for final operation of heating and ventilating equipment and to comply with referenced accessibility requirements.
   1. Spring Hinges: Adjust to achieve positive latching when door can close freely from an open position of 30 degrees.
   2. Electric Strikes: Adjust horizontal and vertical alignment of keeper to properly engage lock bolt.
   3. Door Closers: Adjust sweep period to comply with accessibility requirements and requirements of authorities having jurisdiction.

B. Occupancy Adjustment: Approximately three to six months after date of Substantial Completion, examine and readjust each item of door hardware, including adjusting operating forces, as necessary to ensure function of doors and door hardware.

3.04 CLEANING AND PROTECTION

A. Clean adjacent surfaces soiled by door hardware installation.

B. Clean operating items per manufacturer's instructions to restore proper function and finish.

C. Provide final protection and maintain conditions that ensure door hardware is without damage or deterioration at time of Substantial Completion.

3.05 DOOR HARDWARE SCHEDULE

A. The intent of the hardware specification is to specify the hardware for interior and exterior doors, and to establish a type, continuity, and standard of quality. However, it is the door hardware supplier's responsibility to thoroughly review existing conditions, schedules, specifications, drawings, and other Contract Documents to verify the suitability of the hardware specified.

B. Discrepancies, conflicting hardware, and missing items are to be brought to the attention of the architect with corrections made prior to the bidding process. Omitted items not included in a hardware set should be scheduled with the appropriate additional hardware required for proper application.

C. Hardware items are referenced in the following hardware schedule. Refer to the above specifications for special features, options, cylinders/keying, and other requirements.

D. Hardware Sets:

Abbreviation	Name
BES	Best Locking Systems
GLY	Glynn-Johnson Corp
HES	Hes Inc
IVE	H.B. Ives
LCN	LCN Commercial Division
SCE	Schlage Electronic Security
SCH	Schlage Lock Company
VON	Von Duprin
ZER	Zero International Inc

122320 OPT0396243 VERSION 1

HW SET: 01

FOR USE ON DOOR #(S):

115F						

EACH TO HAVE:

3	EA	HINGE	5BB1HW 4.5 X 4.5 NRP		630	IVE
1	EA	PANIC HARDWARE	CD-78-NL		626	VON
1	EA	SFIC MORTISE HOUSING	80-102		626	SCH
1	EA	SFIC RIM HOUSING	80-129		626	SCH
2	EA	SFIC CORE	PROVIDED AND INSTALLED BY OWNER		626	
1	EA	ELECTRIC STRIKE	9600 FSE 12/24VDC	~	630	HES
1	EA	OH STOP	90S		630	GLY
1	EA	SURFACE CLOSER	4040XP RW/62A		689	LCN
1	EA	KICK PLATE	8400 10" X 2" LDW B-CS		630	IVE
1	EA	RAIN DRIP	142AA		AA	ZER
1	EA	GASKETING	429AA-S		AA	ZER
1	EA	DOOR SWEEP	39A		A	ZER
1	EA	THRESHOLD	655A-223		A	ZER
1	EA	CREDENTIAL READER.	BY DIVISION 28	~		
1	EA	DOOR CONTACT	679-05HM	~	BLK	SCE
1	EA	LOW VOLTAGE POWER.	BY DIVISION 28	~		

OPERATION:
DOOR NORMALLY CLOSED AND LOCKED.
ENTRY BY CREDENTIAL READER TO TEMPORARILY RELEASE THE ELECTRIC STRIKE, USER OPENS DOOR TO ENTER.
DOOR POSITION IS MONITORED THROUGH ACCESS CONTROL SYSTEM.
EGRESS AT ALL TIMES BY EXIT DEVICE.
DOOR MAY BE DOGGED OPEN BT KEY CYLINDER

HW SET: 02

FOR USE ON DOOR #(S):

112						

EACH TO HAVE:

3	EA	HINGE	5BB1HW 4.5 X 4.5 NRP		630	IVE
1	EA	PANIC HARDWARE	78-NL		626	VON
1	EA	SFIC RIM HOUSING	80-129		626	SCH
1	EA	SFIC CORE	PROVIDED AND INSTALLED BY OWNER		626	
1	EA	OH STOP	90S		630	GLY
1	EA	SURFACE CLOSER	4040XP RW/62A		689	LCN
1	EA	KICK PLATE	8400 10" X 2" LDW B-CS		630	IVE
1	EA	RAIN DRIP	142AA		AA	ZER
1	EA	GASKETING	429AA-S		AA	ZER

1	EA	DOOR SWEEP	39A		A	ZER
1	EA	THRESHOLD	655A-223		A	ZER

HW SET: 03

FOR USE ON DOOR #(S):

115B					

EACH TO HAVE:

3	EA	HINGE	5BB1HW 4.5 X 4.5 NRP		630	IVE
1	EA	PANIC HARDWARE	78-L-NL-06		626	VON
1	EA	SFIC RIM HOUSING	80-129		626	SCH
1	EA	SFIC CORE	PROVIDED AND INSTALLED BY OWNER		626	
1	EA	SURFACE CLOSER	4040XP EDA		689	LCN
1	EA	KICK PLATE	8400 10" X 2" LDW B-CS		630	IVE
1	EA	FLOOR STOP	FS18S		BLK	IVE
1	EA	RAIN DRIP	142AA		AA	ZER
1	EA	GASKETING	429AA-S		AA	ZER
1	EA	DOOR SWEEP	39A		A	ZER
1	EA	THRESHOLD	655A-223		A	ZER

HW SET: 04

FOR USE ON DOOR #(S):

101						

EACH TO HAVE:

6	EA	HINGE	5BB1HW 4.5 X 4.5 NRP		652	IVE
1	EA	REMOVABLE MULLION	KR4854B		689	VON
1	EA	PANIC HARDWARE	CD-78-L-DT-06		626	VON
1	EA	PANIC HARDWARE	CD-78-L-NL-06		626	VON
3	EA	SFIC MORTISE HOUSING	80-102		626	SCH
1	EA	SFIC RIM HOUSING	80-129		626	SCH
4	EA	SFIC CORE	PROVIDED AND INSTALLED BY OWNER		626	
1	EA	ELECTRIC STRIKE	9600 FSE 12/24VDC	~	630	HES
2	EA	KICK PLATE	8400 10" X 1" LDW B-CS		630	IVE
2	EA	WALL STOP	WS406/407CCV		630	IVE
1	EA	GASKETING	488SBK PSA		BK	ZER
1	EA	CREDENTIAL READER.	BY DIVISION 28	~		
1	EA	LOW VOLTAGE POWER.	BY DIVISION 28	~		

OPERATION:
DOOR NORMALLY CLOSED AND LOCKED.
ENTRY BY CREDENTIAL READER TO TEMPORARILY RELEASE THE ELECTRIC STRIKE, USER OPENS DOOR TO ENTER.
DOOR POSITION IS MONITORED THROUGH ACCESS CONTROL SYSTEM.
EGRESS AT ALL TIMES BY EXIT DEVICE.
DOOR MAY BE DOGGED OPEN BT KEY CYLINDER

HW SET: 05

FOR USE ON DOOR #(S):

108C	117A				

EACH TO HAVE:

3	EA	HINGE	5BB1HW 4.5 X 4.5		652	IVE
1	EA	STOREROOM LOCK	9K3 7D 15D S3 LC		626	BES
1	EA	SFIC CORE	PROVIDED AND INSTALLED BY OWNER		626	
1	EA	ELECTRIC STRIKE	1500C	~	630	HES
1	EA	SURFACE CLOSER	4040XP RW/PA		689	LCN
1	EA	KICK PLATE	8400 10" X 2" LDW B-CS		630	IVE
1	EA	WALL STOP	WS406/407CCV		630	IVE
1	EA	GASKETING	488SBK PSA		BK	ZER
1	EA	CREDENTIAL READER.	BY DIVISION 28	~		
1	EA	LOW VOLTAGE POWER.	BY DIVISION 28	~		

OPERATION:
DOOR NORMALLY CLOSED AND LOCKED.
ENTRY BY CARD READER TO TEMPORARILY RELEASE THE ELECTRIC STRIKE, USER OPENS DOOR TO ENTER.
EGRESS AT ALL TIMES BY INSIDE LEVER.

HW SET: 06

FOR USE ON DOOR #(S):

109					

EACH TO HAVE:

3	EA	HINGE	5BB1HW 4.5 X 4.5		652	IVE
1	EA	CLASSROOM LOCK	9K3 7R 15D S3 LC		626	BES
1	EA	SFIC CORE	PROVIDED AND INSTALLED BY OWNER		626	
1	EA	ELECTRIC STRIKE	1500C	~	630	HES
1	EA	SURFACE CLOSER	4040XP RW/PA		689	LCN
1	EA	KICK PLATE	8400 10" X 2" LDW B-CS		630	IVE
1	EA	WALL STOP	WS406/407CCV		630	IVE
1	EA	GASKETING	488SBK PSA		BK	ZER

1	EA	CREDENTIAL READER.	BY DIVISION 28	~		
1	EA	LOW VOLTAGE POWER.	BY DIVISION 28	~		

OPERATION:
DOOR NORMALLY CLOSED AND LOCKED.
ENTRY BY CARD READER TO TEMPORARILY RELEASE THE ELECTRIC STRIKE, USER OPENS DOOR TO ENTER.
EGRESS AT ALL TIMES BY INSIDE LEVER.
DOOR MAY BE MANUALLY UNLOCKED BY KEY AND WILL NEED TO BE RE-LOCKED BY KEY

HW SET: 07

FOR USE ON DOOR #(S):

104	113	119			

EACH TO HAVE:

3	EA	HINGE	5BB1 4.5 X 4.5	□	652	IVE
1	EA	STOREROOM LOCK	9K3 7D 15D S3 LC		626	BES
1	EA	SFIC CORE	PROVIDED AND INSTALLED BY OWNER		626	
1	EA	OH STOP	90S	□	630	GLY
1	EA	SURFACE CLOSER	4040XP RW/62A	□	689	LCN
1	EA	KICK PLATE	8400 10" X 2" LDW B-CS	□	630	IVE
1	EA	GASKETING	488SBK PSA	□	BK	ZER

HW SET: 08

FOR USE ON DOOR #(S):

108A	108B				

EACH TO HAVE:

3	EA	HINGE	5BB1 4.5 X 4.5		652	IVE
1	EA	CLASSROOM LOCK	9K3 7R 15D S3 LC		626	BES
1	EA	SFIC CORE	PROVIDED AND INSTALLED BY OWNER		626	
1	EA	OH STOP	90S		630	GLY
1	EA	SURFACE CLOSER	4040XP RW/PA		689	LCN
1	EA	KICK PLATE	8400 10" X 2" LDW B-CS		630	IVE
1	EA	GASKETING	488SBK PSA		BK	ZER

HW SET: 09

FOR USE ON DOOR #(S):

118					

EACH TO HAVE:

4	EA	HINGE	5BB1 4.5 X 4.5		652	IVE
1	EA	CLASSROOM LOCK	9K3 7R 15D S3 LC		626	BES
1	EA	SFIC CORE	PROVIDED AND INSTALLED BY OWNER		626	
1	EA	OH STOP	90S		630	GLY
1	EA	SURFACE CLOSER	4040XP RW/PA		689	LCN
1	EA	KICK PLATE	8400 10" X 2" LDW B-CS		630	IVE

1	EA	GASKETING	488SBK PSA		BK	ZER

HW SET: 10

FOR USE ON DOOR #(S):

114					

EACH TO HAVE:

3	EA	HINGE	5BB1 4.5 X 4.5		652	IVE
1	EA	OFFICE LOCK	9K3 7AB 15D S3 LC		626	BES
1	EA	WALL STOP	WS406/407CCV		630	IVE
1	EA	GASKETING	488SBK PSA		BK	ZER

HW SET: 11

FOR USE ON DOOR #(S):

106	107	110			

EACH TO HAVE:

3	EA	HINGE	5BB1 4.5 X 4.5		652	IVE
1	EA	KEYED PRIVACY W IND	ND52BD RHO OS-OCC		626	SCH
1	EA	SFIC CORE	PROVIDED AND INSTALLED BY OWNER		626	
1	EA	SURFACE CLOSER	4040XP RW/PA		689	LCN
1	EA	KICK PLATE	8400 10" X 2" LDW B-CS		630	IVE
1	EA	GASKETING	488SBK PSA		BK	ZER

KEY IS FOR EMERGENCY ENTRY WHEN DOOR IS LOCKED FROM THE INSIDE BY PUSH BUTTON. KEY WILL NOT LOCK THE DOOR

HW SET: 12

FOR USE ON DOOR #(S):

111					

EACH TO HAVE:

3	EA	HINGE	5BB1 4.5 X 4.5		652	IVE
1	EA	PASSAGE	9K3 0N 15D S3		626	BES
1	EA	SURFACE CLOSER	4040XP RW/PA		689	LCN
1	EA	KICK PLATE	8400 10" X 2" LDW B-CS		630	IVE
1	EA	WALL STOP	WS406/407CCV		630	IVE
1	EA	GASKETING	488SBK PSA		BK	ZER

HW SET: 13

FOR USE ON DOOR #(S):

116	121A	121B			

EACH TO HAVE:

3	EA	HINGE	5BB1 4.5 X 4.5		652	IVE
1	EA	PASSAGE	9K3 0N 15D S3		626	BES
1	EA	SURFACE CLOSER	4040XP RW/PA		689	LCN
1	EA	KICK PLATE	8400 10" X 2" LDW B-CS		630	IVE
1	EA	WALL STOP	WS406/407CCV		630	IVE
1	EA	GASKETING	488SBK PSA		BK	ZER
1	EA	DOOR SWEEP	339WAA		AA	ZER

HW SET: A1

FOR USE ON DOOR #(S):

100A						

EACH TO HAVE:

2	EA	CONT. HINGE	112XY		628	IVE
1	EA	REMOVABLE MULLION	KR4854B STAB		689	VON
1	EA	PANIC HARDWARE	CD-78-DT		626	VON
1	EA	PANIC HARDWARE	CD-78-NL		626	VON
3	EA	SFIC MORTISE HOUSING	80-102		626	SCH
1	EA	SFIC RIM HOUSING	80-129		626	SCH
4	EA	SFIC CORE	PROVIDED AND INSTALLED BY OWNER		626	
1	EA	ELECTRIC STRIKE	9600 FSE 12/24VDC	~	630	HES
2	EA	OH STOP	100S ADJ		630	GLY
1	EA	SURFACE CLOSER	4040XP EDAW/62G		689	LCN
1	EA	SURF. AUTO OPERATOR	4642 CS FC WMS 120 VAC	~	689	LCN
1	EA	PA MOUNTING PLATE	4040XP-18PA		689	LCN
1	EA	5TH SCREW SUPPORT	4040XP-30		689	LCN
1	EA	ACTUATOR, TOUCH	8310-853		630	LCN
1	EA	VESTIBULE ACTUATOR	8310-855		630	LCN
1	EA	BOLLARD POST	8310-866			LCN
1	EA	CREDENTIAL READER.	BY DIVISION 28	~		
2	EA	DOOR CONTACT	679-05HM	~	BLK	SCE
1	EA	LOW VOLTAGE POWER.	BY DIVISION 28	~		

OPERATION:
DOORS NORMALLY CLOSED AND LOCKED.
ENTRY BY CREDENTIAL READER TO TEMPORARILY RELEASE ELECTRIC STRIKE, USER PULLS DOOR TO OPEN.
OUTSIDE ACTUATOR IS ACTIVE WHEN STRIKE IS UNLOCKED, INSIDE ACTUATOR ALWAYS ACTIVE.
DOOR POSITION IS MONITORED BY SECURITY SYSTEM
EGRESS AT ALL TIMES BY PANIC HARDWARE
DOORS MAY BE MANUALLY DOGGED OPEN BY KEY CYLINDER

HW SET: A2

FOR USE ON DOOR #(S):

100B						

EACH TO HAVE:

2	EA	CONT. HINGE	112XY		628	IVE
2	EA	DUMMY PUSH BAR	350-DT-990		626	VON
1	EA	SURFACE CLOSER	4040XP EDAW/62G		689	LCN
1	EA	SURF. AUTO OPERATOR	4642 CS FC WMS 120 VAC	~	689	LCN
1	EA	PA MOUNTING PLATE	4040XP-18PA		689	LCN

1	EA	5TH SCREW SUPPORT	4040XP-30		689	LCN
1	EA	ACTUATOR, TOUCH	8310-853		630	LCN

OPERATION:
DOORS NORMALLLY CLOSED.
USING EITHER ACTUATOR ENGAGES THE OPERATOR TO OPEN THE DOOR

HW SET: R1

FOR USE ON DOOR #(S):

115C	115D	117B	117C		

EACH TO HAVE:

	EA	NOTE	ALL HARDWARE BY ROLL UP / OVERHEAD DOOR MANUFACTURER			

END OF SECTION 087100

This page intentionally left blank

SECTION 088000
GLAZING

ADDENDUM #001, MARCH 25, 2024

PART 1 GENERAL

1.01 SECTION INCLUDES

A. Insulating glass units.

B. Glazing units.

C. Laminated glass interlayers.

D. Glazing compounds.

1.02 RELATED REQUIREMENTS

A. Section 081113 - Hollow Metal Doors and Frames: Glazed lites in doors and borrowed lites.

B. Section 083200 - Sliding Glass Doors: Glazing provided by door manufacturer.

C. Section 083613 - Sectional Doors: Glazed lites in doors.

D. Section 084313 - Aluminum-Framed Storefronts: Glazing provided as part of storefront assembly.

E. Section 084413 - Glazed Aluminum Curtain Walls: Glazing provided as part of wall assembly.

F. Section 085113 - Aluminum Windows: Glazing provided by window manufacturer.

1.03 REFERENCE STANDARDS

A. 16 CFR 1201 - Safety Standard for Architectural Glazing Materials; Current Edition.

B. AAMA 501.6 - Recommended Dynamic Test Method for Determining the Seismic Drift Causing Glass Fallout from Window Wall, Curtain Wall and Storefront Systems; 2018.

C. ANSI Z97.1 - American National Standard for Safety Glazing Materials Used in Buildings - Safety Performance Specifications and Methods of Test; 2015 (Reaffirmed 2020).

D. ASCE 7 - Minimum Design Loads and Associated Criteria for Buildings and Other Structures; Most Recent Edition Cited by Referring Code or Reference Standard.

E. ASTM C864 - Standard Specification for Dense Elastomeric Compression Seal Gaskets, Setting Blocks, and Spacers; 2005 (Reapproved 2019).

F. ASTM C920 - Standard Specification for Elastomeric Joint Sealants; 2018.

G. ASTM C1036 - Standard Specification for Flat Glass; 2021.

H. ASTM C1048 - Standard Specification for Heat-Strengthened and Fully Tempered Flat Glass; 2018.

I. ASTM C1172 - Standard Specification for Laminated Architectural Flat Glass; 2019.

J. ASTM C1193 - Standard Guide for Use of Joint Sealants; 2016 (Reapproved 2023).

K. ASTM C1376 - Standard Specification for Pyrolytic and Vacuum Deposition Coatings on Flat Glass; 2021a.

L. ASTM E1300 - Standard Practice for Determining Load Resistance of Glass in Buildings; 2016.

M. ASTM E2190 - Standard Specification for Insulating Glass Unit Performance and Evaluation; 2019.

N. ASTM F476 - Standard Test Methods for Security of Swinging Door Assemblies; 2023.

O. GANA (GM) - GANA Glazing Manual; 2022.

P. GANA (SM) - GANA Sealant Manual; 2008.

Q. GANA (LGRM) - Laminated Glazing Reference Manual; 2019.

R. IGMA TM-3000 - North American Glazing Guidelines for Sealed Insulating Glass Units for Commercial & Residential Use; 1990 (Reaffirmed 2016).

S. NFRC 100 - Procedure for Determining Fenestration Product U-factors; 2023.

T. NFRC 200 - Procedure for Determining Fenestration Product Solar Heat Gain Coefficient and Visible Transmittance at Normal Incidence; 2023.

U. NFRC 300 - Test Method for Determining the Solar Optical Properties of Glazing Materials and Systems; 2023.

1.04 SUBMITTALS

A. See Section 013000 - Administrative Requirements for submittal procedures.

B. Product Data on Insulating Glass Unit Glazing Types: Provide structural, physical and environmental characteristics, size limitations, special handling and installation requirements.

C. Product Data on Glazing Compounds and Accessories: Provide chemical, functional, and environmental characteristics, limitations, special application requirements, and identify available colors.

D. Samples: Submit two samples 12 by 12 inch (304.8 by 304.8 mm) in size of glass units.

E. Certificate: Certify that products of this section meet or exceed specified requirements.

F. Warranty Documentation: Submit manufacturer warranty and ensure that forms have been completed in Owner's name and registered with manufacturer.

1.05 QUALITY ASSURANCE

A. Perform Work in accordance with GANA (GM), GANA (SM), GANA (LGRM), and IGMA TM-3000 for glazing installation methods. Maintain one copy on site.

B. Manufacturer Qualifications: Company specializing in manufacturing the products specified in this section with minimum three years of documented experience.
   1. Provide certified glass products through ANSI accredited certifications that include plant audits and independent laboratory performance testing.
      a. Insulating Glass Certification Council (IGCC).
      b. Safety Glazing Certification Council (SGCC).

C. Installer Qualifications: Company specializing in performing work of the type specified and with at least three years documented experience.

1.06 FIELD CONDITIONS

A. Do not install glazing when ambient temperature is less than 40 degrees F (4 degrees C).

B. Maintain minimum ambient temperature before, during and 24 hours after installation of glazing compounds.

1.07 WARRANTY

A. See Section 017800 - Closeout Submittals for additional warranty requirements.

B. Insulating Glass Units: Provide a five (5) year manufacturer warranty to include coverage for seal failure, interpane dusting or misting, including providing products to replace failed units.

C. Heat Soaked Tempered Glass: Provide a five (5) year manufacturer warranty to include coverage for spontaneous breakage of fully tempered glass caused by nickel sulfide (NiS) inclusions.

PART 2 PRODUCTS

2.01 MANUFACTURERS

A. Glass Fabricators:
   1. GGI - General Glass International: www.generalglass.com/#sle.
   2. Tecnoglass; Insulating Glass: www.tecnoglass.com/#sle.
   3. Trulite Glass & Aluminum Solutions, LLC: www.trulite.com/#sle.

4. Viracon, Inc: www.viracon.com/#sle.
5. *Vitro (Formally PPG)*
6. Substitutions: See Section 016000 - Product Requirements.

B. Float Glass Manufacturers:
1. Cardinal Glass Industries: www.cardinalcorp.com/#sle.
2. Guardian Glass, LLC: www.guardianglass.com/#sle.
3. Pilkington North America Inc: www.pilkington.com/na/#sle.
4. Saint Gobain North America: www.saint-gobain.com/#sle.
5. Vitro Architectural Glass (formerly PPG Glass): www.vitroglazings.com/#sle.
6. Substitutions: See Section 016000 - Product Requirements.

2.02 PERFORMANCE REQUIREMENTS - EXTERIOR GLAZING ASSEMBLIES

A. Provide type and thickness of exterior glazing assemblies to support assembly dead loads, and to withstand live loads caused by positive and negative wind pressure acting normal to plane of glass.
1. Design Pressure: Calculated in accordance with ASCE 7.
2. Comply with ASTM E1300 for design load resistance of glass type, thickness, dimensions, and maximum lateral deflection of supported glass.
3. Provide glass edge support system sufficiently stiff to limit the lateral deflection of supported glass edges to less than 1/175 of their lengths under specified design load.
4. Glass thicknesses listed are minimum.

B. Weather-Resistive Barrier Seals: Provide completed assemblies that maintain continuity of building enclosure water-resistive barrier, vapor retarder, and/or air barrier.
1. In conjunction with weather barrier related materials described in other sections, as follows:

C. Thermal and Optical Performance: Provide exterior glazing products with performance properties as indicated. Performance properties are in accordance with manufacturer's published data as determined with the following procedures and/or test methods:
1. Center of Glass U-Value: Comply with NFRC 100 using Lawrence Berkeley National Laboratory (LBNL) WINDOW 6.3 computer program.
2. Center of Glass Solar Heat Gain Coefficient (SHGC): Comply with NFRC 200 using Lawrence Berkeley National Laboratory (LBNL) WINDOW 6.3 computer program.
3. Solar Optical Properties: Comply with NFRC 300 test method.

2.03 GLASS MATERIALS

A. Float Glass: Provide float glass based glazing unless otherwise indicated.
1. Annealed Type: ASTM C1036, Type I - Transparent Flat, Class 1 - Clear, Quality - Q3.
2. Kind HS - Heat-Strengthened Type: Complies with ASTM C1048.
3. Kind FT - Fully Tempered Type: Complies with ASTM C1048.
4. Fully Tempered Safety Glass: Complies with ANSI Z97.1 or 16 CFR 1201 criteria for safety glazing used in hazardous locations.
5. Heat-Soak Testing (HST): Provide HST of fully tempered glass used on canopy, point-supported, spider wall, high-risk, sloping overhead, horizontal overhead, free-standing glass protective barrier, or other demanding applications of project, to reduce risks of spontaneous breakage due to nickel sulfide (NiS) induced fractures in accordance with industry established testing requirements.

B. Laminated Glass: Float glass laminated in accordance with ASTM C1172.
1. Laminated Safety Glass: Complies with ANSI Z97.1 - Class B or 16 CFR 1201 - Category I impact test requirements.

2.04 INSULATING GLASS UNITS

A. Manufacturers:
1. Glass: Any of the manufacturers specified for float glass.
2. Cardinal Glass Industries: www.cardinalcorp.com/#sle.

3. Guardian Glass, LLC: www.guardianglass.com/#sle.
4. Viracon, Apogee Enterprises, Inc: www.viracon.com/#sle.
5. Vitro Architectural Glass (formerly PPG Glass): www.vitroglazings.com/#sle.
6. Substitutions: See Section 016000 - Product Requirements.

B. Fabricator: Certified by glass manufacturer for type of glass, coating, and treatment involved and capable of providing specified warranty.

C. Insulating Glass Units: Types as indicated.
1. Durability: Certified by an independent testing agency to comply with ASTM E2190.
2. Coated Glass: Comply with requirements of ASTM C1376 for pyrolytic (hard-coat) or magnetic sputter vapor deposition (soft-coat) type coatings on flat glass; coated vision glass, Kind CV; coated overhead glass, Kind CO; or coated spandrel glass, Kind CS.
3. Warm-Edge Spacers: Low-conductivity thermoplastic with desiccant warm-edge technology design.
   a. Spacer Width: As required for specified insulating glass unit.
   b. Spacer Height: Manufacturer's standard.
4. Spacer Color: Black.
5. Edge Seal:
   a. Dual-Sealed System: Provide polyisobutylene sealant as primary seal applied between spacer and glass panes, and silicone, polysulfide, or polyurethane sealant as secondary seal applied around perimeter.
   b. Color: Black.
6. Purge interpane space with dry air, hermetically sealed.
7. Capillary Tubes: Provide tubes from air space for insulating glass units without inert type gas that have a change of altitude greater than 2500 feet (762 m) between point of fabrication and point of installation to permit pressure equalization of air space.
   a. Capillary Tubes: Tubes to remain open and be of length and material type in accordance with insulating glass fabricator's requirements.

2.05 BASIS OF DESIGN - INSULATING GLASS UNITS

A. Basis of Design - Insulating Glass Units: Vision glazing, with low-e coating.
1. Applications: Exterior insulating glass glazing unless otherwise indicated.
2. *Space between lites filled with argon.*
3. *Total Thickness: 1 inch (25.4 mm).*
4. *Thermal Transmittance (U-Value), Summer - Center of Glass: 0.24, nominal.*
5. *Visible Light Transmittance (VLT): 34 percent, nominal.*
6. *Solar Heat Gain Coefficient (SHGC): .20, nominal.*
7. *Visible Light Reflectance, Outside: 34 percent, nominal.*
8. *Durability: Certified by an independent testing agency to comply with ASTM E2190.*
9. *Coated Glass: Comply with requirements of ASTM C1376 for pyrolytic (hard-coat) or magnetic sputter vapor deposition (soft-coat) type coatings on flat glass; coated vision glass, Kind CV; coated overhead glass, Kind CO; or coated spandrel glass, Kind CS.*
10. *Spacer Color: Black.*
11. *Edge Seal:*
    a. *Dual-Sealed System: Provide polyisobutylene sealant as primary seal applied between spacer and glass panes, and silicone, polysulfide, or polyurethane sealant as secondary seal applied around perimeter.*
12. Color: Black.
13. Purge interpane space with dry air, hermetically sealed.
14. Capillary Tubes: Provide tubes from air space for insulating glass units without inert type gas that have a change of altitude greater than 2500 feet (762 m) between point of fabrication and point of installation to permit pressure equalization of air space.
    a. Capillary Tubes: Tubes to remain open and be of length and material type in accordance with insulating glass fabricator's requirements.

15. *Basis of Design - Vitro Architectural Glass (formerly PPG Glass): www.vitroglazings.com/#sle.*
16. *Outboard Lite: Annealed float glass, 1/4 inch (6.4 mm) thick, minimum.*
    a. *Low-E Coating: Vitro Architectural Glass (formerly PPG Glass) Solarban 70 glass on #2 surface.*
    b. *Glass: Clear.*
17. *Inboard Lite: Heat-strengthened float glass, 1/4 inch (6.4 mm) thick.*
    a. *Glass: Clear.*

2.06 GLAZING UNITS

A. Vision panel - Monolithic Safety Glazing: Non-fire-rated.
   1. Applications:
      a. Glazed lites in doors, except fire doors.
      b. Glazed sidelights to doors, except in fire-rated walls and partitions.
      c. Other locations required by applicable federal, state, and local codes and regulations.
      d. Other locations indicated on drawings.
   2. Glass Type: Fully tempered safety glass as specified.
   3. Tint: Clear.
   4. Thickness: 1/4 inch (6.4 mm), nominal.

B. Sound Control - Security Glazing: Laminated glass, 2-Ply.
   1. Applications: Locations as indicated on drawings.
   2. Tint: Clear.
   3. Thickness: 1/2 inch (12.7 mm).
   4. Outer Lite: Tempered glass.
   5. Interlayer: Polyvinyl butyral (PVB), thickness as required to meet performance criteria.
   6. Inside Lite: Tempered glass.

2.07 GLAZING COMPOUNDS

A. Type GC-5 - Silicone Sealant: Single component; neutral curing; capable of water immersion without loss of properties; nonbleeding, nonstaining; ASTM C920 Type S, Grade NS, Class 25, Uses M, A, and G; with cured Shore A hardness range of 15 to 25; _____ color.

2.08 ACCESSORIES

A. Setting Blocks: Silicone, with 80 to 90 Shore A durometer hardness; ASTM C864 Option II. Length of 0.1 inch for each square foot (25 mm for each square meter) of glazing or minimum 4 inch (100 mm) by width of glazing rabbet space minus 1/16 inch (1.5 mm) by height to suit glazing method and pane weight and area.

B. Glazing Splines: Resilient silicone extruded shape to suit glazing channel retaining slot; ASTM C864 Option II; color black.

PART 3 EXECUTION

3.01 VERIFICATION OF CONDITIONS

A. Verify that openings for glazing are correctly sized and within tolerances, including those for size, squareness, and offsets at corners.

B. Verify that surfaces of glazing channels or recesses are clean, free of obstructions that may impede moisture movement, weeps are clear, and support framing is ready to receive glazing system.

3.02 PREPARATION

A. Clean contact surfaces with appropriate solvent and wipe dry within maximum of 24 hours before glazing. Remove coatings that are not tightly bonded to substrates.

B. Seal porous glazing channels or recesses with substrate compatible primer or sealer.

C. Prime surfaces scheduled to receive sealant where required for proper sealant adhesion.

3.03 INSTALLATION, GENERAL

A. Install glazing sealants in accordance with ASTM C1193, GANA (SM), and manufacturer's instructions.

3.04 INSTALLATION - DRY GLAZING METHOD (GASKET GLAZING)

A. Application - Exterior and/or Interior Glazed: Set glazing infills from either the exterior or the interior of the building.

B. Place setting blocks at 1/4 points with edge block no more than 6 inch (152 mm) from corners.

C. Rest glazing on setting blocks and push against fixed stop with sufficient pressure on gasket to attain full contact.

D. Install removable stops without displacing glazing gasket; exert pressure for full continuous contact.

3.05 CLEANING

A. Remove excess glazing materials from finish surfaces immediately after application using solvents or cleaners recommended by manufacturers.

B. Remove nonpermanent labels immediately after glazing installation is complete.

C. Clean glass and adjacent surfaces after sealants are fully cured.

D. Clean glass on both exposed surfaces not more than 4 days prior to Date of Substantial Completion in accordance with glass manufacturer's written recommendations.

3.06 PROTECTION

A. After installation, mark pane with an 'X' by using removable plastic tape or paste; do not mark heat absorbing or reflective glass units.

B. Remove and replace glass that is damaged during construction period prior to Date of Substantial Completion.

END OF SECTION 088000

SECTION 092116
GYPSUM BOARD ASSEMBLIES

PART 1 GENERAL

1.01 SECTION INCLUDES

A. Performance criteria for gypsum board assemblies.

B. Metal stud wall framing.

C. Acoustic insulation.

D. Gypsum sheathing.

E. Cementitious backing board.

F. Gypsum wallboard.

G. Joint treatment and accessories.

1.02 RELATED REQUIREMENTS

A. Section 061000 - Rough Carpentry: Wood blocking product and execution requirements.

B. Section 072100 - Thermal Insulation: Acoustic insulation.

C. Section 072500 - Weather Barriers: Water-resistive barrier over sheathing.

1.03 REFERENCE STANDARDS

A. AISI S100 - North American Specification for the Design of Cold-Formed Steel Structural Members; 2016, with Supplement (2020).

B. AISI S220 - North American Standard for Cold-Formed Steel Nonstructural Framing; 2020.

C. AISI S240 - North American Standard for Cold-Formed Steel Structural Framing; 2015, with Errata (2020).

D. ASTM A653/A653M - Standard Specification for Steel Sheet, Zinc-Coated (Galvanized) or Zinc-Iron Alloy-Coated (Galvannealed) by the Hot-Dip Process; 2023.

E. ASTM A1003/A1003M - Standard Specification for Steel Sheet, Carbon, Metallic- and Nonmetallic-Coated for Cold-Formed Framing Members; 2015.

F. ASTM C1007 - Standard Specification for Installation of Load Bearing (Transverse and Axial) Steel Studs and Related Accessories; 2020.

G. ASTM C475/C475M - Standard Specification for Joint Compound and Joint Tape for Finishing Gypsum Board; 2017 (Reapproved 2022).

H. ASTM C557 - Standard Specification for Adhesives for Fastening Gypsum Wallboard to Wood Framing; 2003 (Reapproved 2017).

I. ASTM C754 - Standard Specification for Installation of Steel Framing Members to Receive Screw-Attached Gypsum Panel Products; 2020.

J. ASTM C840 - Standard Specification for Application and Finishing of Gypsum Board; 2023.

K. ASTM C954 - Standard Specification for Steel Drill Screws for the Application of Gypsum Panel Products or Metal Plaster Bases to Steel Studs from 0.033 in. (0.84 mm) to 0.112 in. (2.84 mm) in Thickness; 2022.

L. ASTM C1002 - Standard Specification for Steel Self-Piercing Tapping Screws for Application of Gypsum Panel Products or Metal Plaster Bases to Wood Studs or Steel Studs; 2022.

M. ASTM C1047 - Standard Specification for Accessories for Gypsum Wallboard and Gypsum Veneer Base; 2019.

N. ASTM C1177/C1177M - Standard Specification for Glass Mat Gypsum Substrate for Use as Sheathing; 2017.

O. ASTM C1280 - Standard Specification for Application of Exterior Gypsum Panel Products for Use as Sheathing; 2018 (Reapproved 2023).

P. ASTM C1396/C1396M - Standard Specification for Gypsum Board; 2017.

Q. ASTM C1658/C1658M - Standard Specification for Glass Mat Gypsum Panels; 2019, with Editorial Revision (2020).

R. ASTM E90 - Standard Test Method for Laboratory Measurement of Airborne Sound Transmission Loss of Building Partitions and Elements; 2023.

S. ASTM E413 - Classification for Rating Sound Insulation; 2022.

T. GA-216 - Application and Finishing of Gypsum Panel Products; 2021.

1.04 SUBMITTALS

A. See Section 013000 - Administrative Requirements for submittal procedures.

B. Product Data:
   1. Provide manufacturer's data on partition head to structure connectors, showing compliance with requirements.

1.05 DELIVERY, STORAGE, AND HANDLING

A. Store gypsum products and accessories indoors and keep above freezing. Elevate boards above floor, on nonwicking supports, in accordance with manufacturer's recommendations.

B. Store metal products to prevent corrosion.

PART 2 PRODUCTS

2.01 GYPSUM BOARD ASSEMBLIES

A. Provide completed assemblies complying with ASTM C840 and GA-216.

B. Interior Partitions: Provide completed assemblies with the following characteristics:
   1. Acoustic Attenuation: STC of 50-54 calculated in accordance with ASTM E413, based on tests conducted in accordance with ASTM E90.

2.02 METAL FRAMING MATERIALS

A. Steel Sheet: ASTM A1003/A1003M, subject to the ductility limitations indicated in AISI S220 or equivalent.
   1. Structural Grade: As required to meet design criteria.
   2. Corrosion Protection Coating Designation: G40, or equivalent in accordance with AISI S220.

B. Manufacturers - Metal Framing, Connectors, and Accessories:
   1. ClarkDietrich: www.clarkdietrich.com/#sle.
   2. Jaimes Industries: www.jaimesind.com/#sle.
   3. Phillips Manufacturing Co; ____: www.phillipsmfg.com/#sle.
   4. SCAFCO Corporation; _____: www.scafco.com/#sle.
   5. Steel Construction Systems; _____: www.steelconsystems.com/#sle.

C. Nonstructural Framing System Components: AISI S220; galvanized sheet steel, of size and properties necessary to comply with ASTM C754 for the spacing indicated, with maximum deflection of wall framing of L/120 at 5 psf (L/120 at 240 Pa).
   1. Studs: C-shaped with knurled or embossed faces.
      a. Products:
         1) MBA Building Supplies: www.mbastuds.com/#sle.
         2) R-stud: www.rstud.com/#sle.
   2. Runners: U shaped, sized to match studs.

D. Partition Head to Structure Connections: Provide mechanical anchorage devices that accommodate deflection and prevent rotation of studs while maintaining structural performance of partition.
   1. Structural Performance: Maintain lateral load resistance and vertical movement capacity required by applicable code, when evaluated in accordance with AISI S100.

2. Material: ASTM A653/A653M steel sheet, SS Grade 50/340, with G60/Z180 hot-dipped galvanized coating.

2.03 BOARD MATERIALS

A. Manufacturers - Gypsum-Based Board:
   1. American Gypsum Company: www.americangypsum.com/#sle.
   2. CertainTeed Corporation: www.certainteed.com/#sle.
   3. Georgia-Pacific Gypsum: www.gpgypsum.com/#sle.
   4. Gold Bond Building Products, LLC provided by National Gypsum Company; ____: www.goldbondbuilding.com/#sle.
   5. PABCO Gypsum: www.pabcogypsum.com/#sle.
   6. USG Corporation: www.usg.com/#sle.
   7. Substitutions: See Section 016000 - Product Requirements.

B. Gypsum Wallboard: Paper-faced gypsum panels as defined in ASTM C1396/C1396M; sizes to minimize joints in place; ends square cut.
   1. Application: Use for vertical surfaces and ceilings, unless otherwise indicated.
   2. Glass mat faced gypsum panels, as defined in ASTM C1658/C1658M, suitable for paint finish, of the same core type and thickness may be substituted for paper-faced board.
   3. Thickness:
      a. Vertical Surfaces: 5/8 inch (16 mm).
      b. Ceilings: 5/8 inch (16 mm).
      c. Multi-Layer Assemblies: Thicknesses as indicated on drawings.

C. Backing Board For Non-Wet Areas: Water-resistant gypsum backing board as defined in ASTM C1396/C1396M; sizes to minimum joints in place; ends square cut.
   1. Application: Vertical surfaces behind thinset tile, except in wet areas.
   2. Regular Board Thickness: 5/8 inch (16 mm).
   3. Edges: Tapered.

D. Exterior Sheathing Board: Sizes to minimize joints in place; ends square cut.
   1. Application: Exterior sheathing, unless otherwise indicated.
   2. Glass Mat Faced Sheathing: Glass mat faced gypsum substrate as defined in ASTM C1177/C1177M.
   3. Core Type: Regular.
   4. Regular Board Thickness: 1/2 inch (13 mm).
   5. Edges: Square.

2.04 GYPSUM BOARD ACCESSORIES

A. Acoustic Insulation: See Section 072100.

B. Acoustic Sealant: Acrylic emulsion latex or water-based elastomeric sealant; do not use solvent-based non-curing butyl sealant.
   1. Products:
      a. Franklin International, Inc; Titebond Acoustical Smoke & Sound Sealant: www.titebond.com/#sle.
      b. Specified Technologies Inc; Smoke N Sound Acoustical Sealant: www.stifirestop.com/#sle.
      c. Substitutions: See Section 016000 - Product Requirements.

C. Water-Resistive Barrier: See Section 072500.

D. Beads, Joint Accessories, and Other Trim: ASTM C1047, galvanized steel or rolled zinc, unless noted otherwise.
   1. Corner Beads: Low profile, for 90 degree outside corners.
   2. L-Trim: Sized to fit th gypsum wallboard.

E. Joint Materials: ASTM C475/C475M and as recommended by gypsum board manufacturer for project conditions.

1. Fiberglass Tape: 2 inch (50 mm) wide, coated glass fiber tape for joints and corners, except as otherwise indicated.
2. Paper Tape: 2 inch (50 mm) wide, creased paper tape for joints and corners, except as otherwise indicated.
3. Joint Compound: Drying type, vinyl-based, ready-mixed.
4. Joint Compound: Setting type, field-mixed.

F. Screws for Fastening of Gypsum Panel Products to Cold-Formed Steel Studs Less than 0.033 inches (0.84 mm) in Thickness and Wood Members: ASTM C1002; self-piercing tapping screws, corrosion-resistant.

G. Screws for Fastening of Gypsum Panel Products to Steel Members from 0.033 to 0.112 inch (0.84 to 2.84 mm) in Thickness: ASTM C954; steel drill screws, corrosion-resistant.

H. Adhesive for Attachment to Wood, ASTM C557 and Metal:
1. Products:
a. Franklin International, Inc; Titebond Drywall Construction Adhesive: www.titebond.com/#sle.
b. Liquid Nails, a brand of PPG Architectural Coatings; ____: www.liquidnails.com/#sle.
c. Substitutions: See Section 016000 - Product Requirements.

PART 3 EXECUTION

3.01 EXAMINATION

A. Verify that project conditions are appropriate for work of this section to commence.

3.02 FRAMING INSTALLATION

A. Metal Framing: Install in accordance with ASTM C1007AISI S220 and manufacturer's instructions.

B. Studs: Space studs at 16 inches on center (at 406 mm on center).
1. Extend partition framing to structure where indicated and to ceiling in other locations.
2. Partitions Terminating at Ceiling: Attach ceiling runner securely to ceiling track in accordance with manufacturer's instructions.
3. Partitions Terminating at Structure: Attach top runner to structure, maintain clearance between top of studs and structure, and connect studs to track using specified mechanical devices in accordance with manufacturer's instructions; verify free movement of top of stud connections; do not leave studs unattached to track.

C. Blocking: Install wood blocking for support of:
1. Framed openings.
2. Wall-mounted cabinets.
3. Plumbing fixtures.
4. Toilet partitions.
5. Toilet accessories.
6. Wall-mounted door hardware.

3.03 ACOUSTIC ACCESSORIES INSTALLATION

A. Acoustic Insulation: Place tightly within spaces, around cut openings, behind and around electrical and mechanical items within partitions, and tight to items passing through partitions.

B. Acoustic Sealant: Install in accordance with manufacturer's instructions.

3.04 BOARD INSTALLATION

A. Comply with ASTM C840, GA-216, and manufacturer's instructions. Install to minimize butt end joints, especially in highly visible locations.

B. Exterior Sheathing: Comply with ASTM C1280. Install sheathing vertically, with edges butted tight and ends occurring over firm bearing.
1. Paper-Faced Sheathing: Immediately after installation, protect from weather by application of water-resistive barrier.

3.05 INSTALLATION OF TRIM AND ACCESSORIES

A. Control Joints: Place control joints consistent with lines of building spaces and as indicated.

B. Corner Beads: Install at external corners, using longest practical lengths.

C. Edge Trim: Install at locations where gypsum board abuts dissimilar materials.

3.06 JOINT TREATMENT

A. Finish gypsum board in accordance with levels defined in ASTM C840, as follows:
   1. Level 5: Walls and ceilings to receive semi-gloss or gloss paint finish and other areas specifically indicated.
   2. Level 4: Walls and ceilings to receive paint finish or wall coverings, unless otherwise indicated.
   3. Level 3: Walls to receive textured wall finish.
   4. Level 2: In utility areas, behind cabinetry, and on backing board to receive tile finish.
   5. Level 1: Fire-resistance-rated wall areas above finished ceilings, whether or not accessible in the completed construction.

B. Tape, fill, and sand exposed joints, edges, and corners to produce smooth surface ready to receive finishes.
   1. Feather coats of joint compound so that camber is maximum 1/32 inch (0.8 mm).
   2. Taping, filling, and sanding are not required at surfaces behind adhesive applied ceramic tile and fixed cabinetry.

C. Where Level 5 finish is indicated, spray apply high build drywall surfacer over entire surface after joints have been properly treated; achieve a flat and tool mark-free finish.

3.07 TOLERANCES

A. Maximum Variation of Finished Gypsum Board Surface from True Flatness: 1/8 inch in 10 feet (3 mm in 3 m) in any direction.

3.08 CLEANING

A. Clean _____.

3.09 PROTECTION

A. Protect installed gypsum board assemblies from subsequent construction operations.

END OF SECTION 092116

This page intentionally left blank

SECTION 093000
TILING

PART 1 GENERAL

1.01 SECTION INCLUDES

A. Tile for wall applications.

1.02 RELATED REQUIREMENTS

A. Section 079200 - Joint Sealants: Sealing joints between tile work and adjacent construction and fixtures.

1.03 REFERENCE STANDARDS

A. ANSI A118.15 - American National Standard Specifications for Improved Modified Dry-Set Cement Mortar; 2023.

B. ANSI A137.1 - American National Standard Specifications for Ceramic Tile; 2022.

C. ASTM D4551 - Standard Specification for Poly(Vinyl Chloride) (PVC) Plastic Flexible Concealed Water-Containment Membrane; 2022.

D. TCNA (HB) - Handbook for Ceramic, Glass, and Stone Tile Installation; 2024.

1.04 SUBMITTALS

A. See Section 013000 - Administrative Requirements for submittal procedures.

B. Shop Drawings: Indicate tile layout, patterns, ceramic accessories, and setting details.

1.05 QUALITY ASSURANCE

A. Maintain one copy of ANSI A108/A118/A136 and TCNA (HB) on site.

1.06 FIELD CONDITIONS

A. Maintain ambient and substrate temperature above 50 degrees F (10 degrees C) and below 100 degrees F (38 degrees C) during installation and curing of setting materials.

PART 2 PRODUCTS

2.01 TILE

A. Manufacturers: All products of each type by the same manufacturer.
   1. Dal-Tile Corporation: www.daltile.com/#sle.
   2. Substitutions: See Section 016000 - Product Requirements.

B. Glazed Wall Tile: ANSI A137.1 standard grade.
   1. Size: 2 bu 8 inch, nominal.
   2. Surface Finish: High gloss.
   3. Color(s): As indicated on drawings.
   4. Trim Units: Matching bead, bullnose, cove, and base shapes in sizes coordinated with field tile.
   5. Products:
      a. Dal-Tile Corporation: www.daltile.com/#sle.
         1) For style and pattern, color finish - see finish legend on plans

C. Porcelain Tile: ANSI A137.1 standard grade.
   1. Size: 24x48 inch, nominal.
   2. Thickness: 5/16 inch (8 mm).
   3. Edges: Square.
   4. Surface Finish: Unpolished.
   5. Trim Units: Matching bullnose, cove base, and cove shapes in sizes coordinated with field tile.
   6. Products:
      a. Dal-Tile Corporation: www.daltile.com/#sle.
         1) For style and pattern, color finish - see finish legend on plans

2.02 TRIM AND ACCESSORIES

A. Ceramic Accessories: Glazed finish, same color and finish as adjacent field tile; same manufacturer as tile.

2.03 SETTING MATERIALS

A. Provide setting and grout materials from same manufacturer.

B. Manufacturers:
   1. ARDEX Engineered Cements; _____: www.ardexamericas.com/#sle.
   2. Custom Building Products; _____: www.custombuildingproducts.com/#sle.
   3. LATICRETE International, Inc; _____: www.laticrete.com/#sle.
   4. Substitutions: See Section 016000 - Product Requirements.

C. Improved Latex-Portland Cement Mortar Bond Coat: ANSI A118.15.
   1. Applications: Use this type of bond coat where indicated, and where no other type of bond coat is indicated.

2.04 GROUTS

A. Provide setting and grout materials from same manufacturer.

B. High Performance Polymer Modified Grout: ANSI A118.7 polymer modified cement grout.
   1. Applications: Use this type of grout where indicated and where no other type of grout is indicated.
   2. Use sanded grout for joints 1/8 inch (3.2 mm) wide and larger; use unsanded grout for joints less than 1/8 inch (3.2 mm) wide.
   3. Color(s): As indicated on drawings.

2.05 MAINTENANCE MATERIALS

A. Grout Sealer: Liquid-applied, moisture and stain protection for existing or new Portland cement grout.
   1. Composition: Water-based colorless silicone.

2.06 ACCESSORY MATERIALS

PART 3 EXECUTION

3.01 EXAMINATION

A. Verify that wall surfaces are smooth and flat within the tolerances specified for that type of work, are dust-free, and are ready to receive tile.

3.02 PREPARATION

A. Protect surrounding work from damage.

B. Vacuum clean surfaces and damp clean.

C. Seal substrate surface cracks with filler. Level existing substrate surfaces to acceptable flatness tolerances.

3.03 INSTALLATION - GENERAL

A. Lay tile to pattern indicated. Do not interrupt tile pattern through openings.

B. Cut and fit tile to penetrations through tile, leaving sealant joint space. Form corners neatly. Align floor joints.

C. Place tile joints uniform in width, subject to variance in tolerance allowed in tile size. Make grout joints without voids, cracks, excess mortar or excess grout, or too little grout.

D. Form internal angles square and external angles square.

E. Install ceramic accessories rigidly in prepared openings.

F. Sound tile after setting. Replace hollow sounding units.

G. Keep control and expansion joints free of mortar, grout, and adhesive.

H. Prior to grouting, allow installation to completely cure; minimum of 48 hours.

I. Grout tile joints unless otherwise indicated.

J. At changes in plane and tile-to-tile control joints, use tile sealant instead of grout, with either bond breaker tape or backer rod as appropriate to prevent three-sided bonding.

3.04 INSTALLATION - WALL TILE

A. Over coated glass mat backer board on studs, install in accordance with TCNA (HB) Method W245.

3.05 CLEANING

A. Clean tile and grout surfaces.

3.06 PROTECTION

A. Do not permit traffic over finished floor surface for 4 days after installation.

END OF SECTION 093000

This page intentionally left blank

SECTION 097200
DRY-ERASE WALLCOVERING

PART 1 GENERAL

1.01 REFERENCE STANDARDS

A. ASTM E84 - Standard Test Method for Surface Burning Characteristics of Building Materials; 2023d.

B. GA-214 - Levels of Finish for Gypsum Panel Products; 2021.

1.02 SUMMARY

A. Division Includes:
   1. Dry Erase Wallcovering.
   2. Adhesive Backed Dry Erase Wallcovering.
   3. Tray and Trim
   4. Accessories.

B. Related Divisions:
   1. Interior Lighting.
   2. Plaster and Gypsum Board: Wall substrate.
   3. Interior Painting: Priming for vinyl wall coverings.
   4. Division 09 72 16.13 Flexible Vinyl Wall Coverings.
   5. Visual Display Surfaces: Chalk and markerboards.

1.03 REFERENCES

A. American Society for Testing and Materials (ASTM):
   a. Test Method for Surface Burning Characteristics of Building Materials.

B. Gypsum Association
   a. Recommended Levels of Gypsum Board Finish.

1.04 SUBMITTALS

A. Manufacturer’s product data and installation instructions for each type of dry erase wallcovering, adhesive, and accessories required.

B. Manufacturer’s written product data indicating compliance with specified materials required.

C. Manufacturer’s written installation instructions.

D. Manufacturer’s written instructions for recommended maintenance of each type of dry erase wall covering required.

E. Samples:
   1. 7 inch (177.8 mm) x 9 inch (228.6 mm) samples of each dry erase material required.
   2. 6 inch (152.4 mm) samples of trim, tray, and end caps required.

1.05 QUALITY ASSURANCE

A. Manufacturer: Provide each type of dry erase wallcovering required produced by one manufacturer.

B. Installer: Installation by skilled commercial wallcovering contractor with no less than three years of documented experience installing dry erase wallcovering of the types and extent required.

C. Composition:
   a. Nu-Vu-Rite™: Provide non-woven backing, pigmented vinyl capped with matte, projectable, dry erase film, embossed with a bi-directional lenticular pattern that meets California Indoor Air Quality Specification 01350.
   b. Project-Rite™: Provide non-woven backing, pigmented vinyl capped with matte, projectable, dry erase and slight emboss that meets California Indoor Air Quality Specification 01350.

c. Matte-Rite™: Provide specific backing: non-woven or adhesive backing with white pigmented vinyl capped with matte, projectable, dry erase film that meets California Indoor Air Quality Specification 01350.
d. Projectable Mag-Rite™: Provide woven backing, ferrous sheet bonded with white pigmented vinyl capped with matte, projectable, dry erase film.
e. Mag-Rite®: Provide woven backing, ferrous sheet bonded with white pigmented vinyl and capped with semi-gloss, dry erase film that meets California Indoor Air Quality Specification 01350.
f. Mag-Rite® 59: Provide woven backed, ferrous sheet bonded with white pigmented vinyl and capped with semi-gloss, dry erase film that meets California Indoor Air Quality Specification 01350.
g. Just-Rite®: Provide woven backing, white pigmented vinyl capped with semi-gloss, dry erase film that meets California Indoor Air Quality Specification 01350. (Note: Just-Rite 60 meets California Indoor Air Quality Specification 01350; Just-Rite 48 has not been tested to that standard.)
h. EZ-Rite®: Provide specific backing: non-woven or adhesive backing, white pigmented vinyl capped with high-gloss, dry erase film that meets California Indoor Air Quality Specification 01350.
i. Koro-Rite®: Provide non-woven backing, pigmented vinyl capped with high-gloss, dry erase film that meets California Indoor Air Quality Specification 01350.

D. Surface Burning Characteristics Classification: Provide materials that meet Class I/A rating when tested in accordance with ASTM E84 for flame spread and smoke developed

E. Field Samples: Prepare field samples for architect's review and establish requirements for seaming and finish trim.
a. Install sample panel of each type presentation wallcovering specified in area designated by architect.
b. Maintain corrected and approved samples to serve as a standard of performance for the project.

1.06 PRODUCT DELIVERY, STORAGE, AND HANDLING

A. Deliver presentation wallcoverings to the project site in unbroken and undamaged original factory packaging and clearly labeled with the manufacturer's identification label, quality or grade, and lot number.

B. Store materials in a clean, dry storage area with temperature maintained above 55°F (13°C) with normal humidity.

C. Store material within original packaging to prevent damage.

1.07 PROJECT CONDITIONS

A. Do not apply presentation wallcoverings when surface and ambient temperatures are outside the temperature ranges required by the wallcovering manufacturer.

B. Provide continuous ventilation and heating facilities to maintain substrate surface and ambient temperatures above 55°F (13°C) unless required otherwise by manufacturer's instructions.

C. Apply adhesive when substrate surface temperature and ambient temperature is above 55°F (13°C) and relative humidity is below forty percent.

D. Maintain constant recommended temperature and humidity for at least 72 hours prior to and throughout the installation period, and for 72 hours after wallcovering installation completion.

E. Provide not less than 80-foot-candles per square foot lighting level measured mid-height at substrate surfaces.

1.08 WARRANTY

A. Submit manufacturer's limited ten-year written warranty against manufacturing defects.

1.09 MAINTENANCE

A. Maintenance instructions: Include precautions against cleaning materials and methods that may be detrimental to finishes and performance.

PART 2 PRODUCTS

2.01 MANUFACTURER

A. . Contact sales representative at .

2.02 MATERIALS

A. Walltalkers Nu-Vu-Rite: Non-woven backed, pigmented vinyl capped with matte, projectable, dry erase film, embossed with a bi-directional lenticular pattern. Patent # 5,361,164.
   a. NV60: 59/60 inch (24.98 mm) width, non-woven backing.

B. Walltalkers Project-Rite: Non-woven backed, pigmented vinyl capped with matte, projectable, dry erase and slight emboss.
   a. PE50: 49/50 inch (24.89 mm) width, non-woven backing, white only.
   b. PE60: 59/60 inch (24.98 mm) width, non-woven backing, specify color.

C. Walltalkers Matte-Rite: Specify backing: non-woven or adhesive backing with white pigmented vinyl capped with matte, projectable, dry erase film.
   a. MP50: 49/50 inch (24.89 mm) width, non-woven backing, white only.
   b. MP60: 59/60 inch (24.98 mm) width, non-woven backing, white only
   c. MA50: 49/50 inch (24.89 mm) width, self-adhesive backing, white only.

D. Walltalkers Projectable Mag-Rite: Woven backed, ferrous sheet bonded with white pigmented vinyl capped with matte, projectable, dry erase film.
   a. M2PR: 47/48 inch (24.87 mm) width, scrim backing.

E. Walltalkers Mag-Rite: Woven backed, ferrous sheet bonded with white pigmented vinyl and capped with semi-gloss, dry erase film.
   a. M248: 47/48 inch (24.87 mm) width, woven backing.
   b. M259: 59/60 inch (24.98 mm) wide, woven backing.

F. Walltalkers Just-Rite: Woven backed, white pigmented vinyl capped with semi-gloss, dry erase film.
   a. JR48: 47/48 inch (24.87 mm) width (1.19/1.22m), scrim backing.
      1) 7. JR60: 59/60 inch (24.98 mm) width, scrim backing.

G. Walltalkers EZ-Rite: Specify backing: non-woven or self-adhesive backing, white pigmented vinyl capped with high-gloss, dry erase film
   a. ZA50: 49/50 inch (24.89 mm) width, self-adhesive backing.
   b. ZP50: 49/50 inch (24.89 mm) width, non-woven backing.

H. Walltalkers Koro-Rite: Non-woven backed, pigmented vinyl capped with high-gloss, dry erase film.
   a. KR60: 59/60-inch (1.50/1.52m), non-woven backing, white only

2.03 TRIM & TRAY

A. Aluminum Tray: Clear satin, anodized aluminum, snap-on marker and eraser tray with clips. Specify length: 4’ length (TY04-00), 8’ length (TY08-00), 12’ length (TY12-00)

B. Aluminum Trim: Clear satin, anodized aluminum, snap-on trim with clips. Specify length: 4’ length (TY04-00), 8’ length (TY08-00), 12’ length (TY12-00)

C. End Caps:
   a. ET02-00: 1/4 inch (6.35 mm) box tray end cap set for marker and eraser tray.
   b. ET03-00: 1/2 inch (12.7 mm) anodized tray end cap set for marker and eraser tray.

D. J Cap Wallcovering Trim: JC12-00: Clear satin, anodized aluminum, low profile trim Also available in Black and White powder coat

E. Quantum Tray: Aluminum blade style marker and eraser tray with angled, smooth-finished ends and installation hardware kit. Specify finish and length:
   a. QA18TY-00: Silver anodized aluminum, 18 inch (457.2 mm) length only.
   b. QA36TY-00: Silver anodized aluminum, 36 inch (914.4 mm) length only.
   c. QA48TY-00: Silver anodized aluminum, 48 inch (1219.2 mm) length only.
   d. QP18TY-05: White powder coated aluminum, 18 inch (457.2 mm) length only.
   e. QP36TY-05: White powder coated aluminum, 36 inch (914.4 mm) length only.
   f. QP48TY-05: White powder coated aluminum, 48 inch (1219.2 mm) length only.
   g. QP18TY-04: Black powder coated aluminum, 18 inch (457.2 mm) length only.
   h. QP36TY-04: Black powder coated aluminum, 36 inch (914.4 mm) length only.
   i. QP48TY-04: Black powder coated aluminum, 48 inch (1219.2 mm) length only.

F. Quantum Mag Tray: Aluminum blade style marker and eraser tray with magnetic backing. Specify finish:
   a. QM18TY-00: Silver anodized aluminum, 18 inch (457.2 mm) length only.
   b. QM36TY-00: Silver anodized aluminum, 36 inch (914.4 mm) length only.
   c. QM48TY-00: Silver anodized aluminum, 48 inch (1219.2 mm) length only.
   d. QM18TY-05: White powder coated aluminum, 18 inch (457.2 mm) length only.
   e. QM36TY-05: White powder coated aluminum, 36 inch (914.4 mm) length only.
   f. QM48TY-05: White powder coated aluminum, 48 inch (1219.2 mm) length only.
   g. QM18TY-04: Black powder coated aluminum, 18 inch (457.2 mm) length only.
   h. QM36TY-04: Black powder coated aluminum, 36 inch (914.4 mm) length only.
   i. QM48TY-04: Black powder coated aluminum, 48 inch (1219.2 mm) length only.

2.04 ACCESSORIES

A. Adhesives: Heavy-duty clear or clay based premixed vinyl adhesive.

B. Substrate Primer/Sealer: White pigmented acrylic base primer/sealer specifically formulated for use with vinyl wallcoverings.

C. Aluminum Marker Caddy: Provide 3 inch (76.2 mm) high x 7-1/4 inch (184 mm) wide aluminum caddy with four holes and a slot for storing markers and an eraser.
   a. AMC1-00: Aluminum marker & eraser caddy, silver anodized aluminum.
   b. AMC1-05: Aluminum marker & eraser caddy, white powder coated aluminum.
   c. AMC1-04: Aluminum marker & eraser caddy, black powder coated aluminum.
   d. AMCM-00: Aluminum marker & eraser caddy w/ magnetic backing, silver anodized aluminum.

PART 3 EXECUTION

3.01 EXAMINATION

A. Examine substrates and installation conditions to ensure surface conditions meet or exceed a Level 4 finish, per GA-214-M-97: Recommended Levels of Gypsum Board Finish, and permanent lighting should be installed and operational.

B. Test substrate with suitable moisture meter and verify that moisture content does not exceed four percent.

C. Verify substrate surface is clean, dry, smooth, structurally sound, and free from surface defects and imperfections that would show through the finished surface.

D. Evaluate all painted surfaces for the possibility of pigment bleed-through.

E. Notify the contractor and architect in writing of any conditions detrimental to the proper and timely completion of the installation.

F. Beginning of installation means acceptance of surface conditions

3.02 INSTALLATION: WALLCOVERING BACKING

A. Acclimate wallcovering in the area of installation a minimum of 24 hours before installation.

B. Read and follow the manufacturer's installation instruction sheet contained in each roll of the dry erase wallcovering.

C. Examine all materials for pattern, color, quantity and quality, as specified for the correct location prior to cutting.

D. Primer: Use a quality pigmented acrylic wallcovering primer.

E. Adhesive: Apply a uniform coat of heavy-duty pre-mixed clay-based or extra strength clear wallcovering adhesive.

F. Install each strip horizontally and in the same sequence as cut from the roll.

G. Install dry erase wallcovering sheets in exact order as they are cut from bolt. Reverse hang alternate strips (except lined products). Do not crease or bend the wallcovering when handling.

H. Install dry erase wallcovering horizontally using a level line.

I. Using a level or straight edge, double cut the seam with a seam-cutting tool
   1. (Ex: Double Seam-Cutter or Swedish Knife). Do not score drywall or plasterboard when cutting material.

J. When covering the entire wall, seam the material out of the main writing and viewing areas of the wall.

K. Apply wallcovering to the substrate using a wallcovering smoother, wrapped with a soft cloth, to remove air bubbles. Do not use sharp edged smoothing tools. Smooth material on the wall from the middle to the outside edge.

L. Remove excess adhesive immediately after the wallcovering is applied. Clean entire surface with a warm mild soap solution, and clean soft cloths. Rinse thoroughly with water and let dry before using. Change water often to maintain water clarity.

M. M.Stop installation of material that is questionable in appearance and notify the manufacturer's representative for an inspection.

3.03 INSTALLATION: SELF-ADHESIVE BACKING

A. Apply Walltalkers adhesive backed dry erase wallcovering only on surfaces impervious to moisture such as chalkboards, marker boards, glass, high-pressure laminates, or similar.

B. Acclimate wallcovering in the area of installation a minimum of twenty-four hours before installation.

C. Examine all materials for color, quantity, and quality as specified for the correct location prior to cutting.

D. Read and follow the instructions in the manufacturer's installation sheet contained in each roll of the dry erase wallcovering.

E. Do not crease or bend the wallcovering when handling.

F. Mix dampening solution by using one half to one capful of mild detergent to 1 gallon (1.81kg) clean water. Damping solution is used in positioning the material and allows for the removal of air bubbles.

G. Use a pump spray bottle to apply the dampening solution to the the surface.

H. Slowly remove release liner and smooth wall covering to the hanging surface using a wallcovering smoother wrapped with a soft cloth from the middle to the outside edge to remove air bubbles.

I. Stop installation of material that is questionable in appearance and notify the manufacturer's representative for an inspection.

3.04 CLEAN-UP

A. Upon completion of installation, remove all exposed adhesive immediately using a soft cloth and a warm, mild soap solution and rinse thoroughly with water and dry with clean towel prior to using.

B. A. Upon completion of the work, remove surplus materials, rubbish, and debris resulting from the wallcovering installation. Leave areas in neat, clean, and orderly condition.

END OF SECTION 097200

SECTION 099113
EXTERIOR PAINTING

PART 1 GENERAL

1.01 RELATED DOCUMENTS

A. Drawings and general provisions of the Contract, including General and Supplementary Conditions and Division 01 Specification Sections, apply to this Section.

1.02 SUMMARY

A. Section includes surface preparation and the application of paint systems on the following exterior substrates:
   1. Steel and iron.
   2. Galvanized metal.
   3. Aluminum (not anodized or otherwise coated).
   4. Stainless steel.

B. Related Requirements:
   1. Section 051200 "Structural Steel Framing" for shop priming of metal substrates.
   2. Section 055000 "Metal Fabrications" for shop priming metal fabrications.
   3. Section 055213 "Pipe and Tube Railings" for shop priming pipe and tube railings.
   4. Section 055319 "Expanded Metal Gratings" for shop priming metal gratings.

1.03 DEFINITIONS

A. MPI Gloss Level 1: Not more than five units at 60 degrees and 10 units at 85 degrees, according to ASTM D 523.

B. MPI Gloss Level 3: 10 to 25 units at 60 degrees and 10 to 35 units at 85 degrees, according to ASTM D 523.

C. MPI Gloss Level 4: 20 to 35 units at 60 degrees and not less than 35 units at 85 degrees, according to ASTM D 523.

D. MPI Gloss Level 5: 35 to 70 units at 60 degrees, according to ASTM D 523.

E. MPI Gloss Level 6: 70 to 85 units at 60 degrees, according to ASTM D 523.

F. MPI Gloss Level 7: More than 85 units at 60 degrees, according to ASTM D 523.

1.04 ACTION SUBMITTALS

A. Product Data: For each type of product. Include preparation requirements and application instructions.
   1. Include printout of current "MPI Approved Products List" for each product category specified, with the proposed product highlighted.
   2. Indicate VOC content.

B. Sustainable Design Submittals:
   1. Meet the DFCM requirements for High Performance Building Standards

C. Samples for Initial Selection: For each type of topcoat product.

D. Samples for Verification: For each type of paint system and each color and gloss of topcoat.
   1. Submit Samples on rigid backing, 8 inches (203.2 mm) square.
   2. Apply coats on Samples in steps to show each coat required for system.
   3. Label each coat of each Sample.
   4. Label each Sample for location and application area.

E. Product List: Cross-reference to paint system and locations of application areas. Use same designations indicated on Drawings and in schedules. Include color designations.

1.05 MAINTENANCE MATERIAL SUBMITTALS

A. Furnish extra materials that match products installed and that are packaged with protective covering for storage and identified with labels describing contents.

1. Paint: 5 percent, but not less than 1 gal. (3.8 L) of each material and color applied.

1.06 QUALITY ASSURANCE

A. Mockups: Apply mockups of each paint system indicated and each color and finish selected to verify preliminary selections made under Sample submittals and to demonstrate aesthetic effects and set quality standards for materials and execution.
   1. Architect will select one surface to represent surfaces and conditions for application of each paint system.
      a. Vertical and Horizontal Surfaces: Provide samples of at least 100 sq. ft. (9 sq. m).
      b. Other Items: Architect will designate items or areas required.
   2. Final approval of color selections will be based on mockups.
      a. If preliminary color selections are not approved, apply additional mockups of additional colors selected by Architect at no added cost to Owner.
   3. Approval of mockups does not constitute approval of deviations from the Contract Documents contained in mockups unless Architect specifically approves such deviations in writing.
   4. Subject to compliance with requirements, approved mockups may become part of the completed Work if undisturbed at time of Substantial Completion.

1.07 DELIVERY, STORAGE, AND HANDLING

A. Store materials not in use in tightly covered containers in well-ventilated areas with ambient temperatures continuously maintained at not less than 45 deg F (7 deg C).
   1. Maintain containers in clean condition, free of foreign materials and residue.
   2. Remove rags and waste from storage areas daily.

1.08 FIELD CONDITIONS

A. Apply paints only when temperature of surfaces to be painted and ambient air temperatures are between 50 and 95 deg F (10 and 35 deg C).

B. Do not apply paints in snow, rain, fog, or mist; when relative humidity exceeds 85 percent; at temperatures less than 5 deg F (3 deg C) above the dew point; or to damp or wet surfaces.

PART 2 PRODUCTS

2.01 MANUFACTURERS

A. Manufacturers: Subject to compliance with requirements, available manufacturers offering products that may be incorporated into the Work include, but are not limited to the following:
   1. Behr Process Corporation.
   2. Benjamin Moore & Co.
   3. PPG Paints.
   4. Pratt & Lambert.
   5. Rust-Oleum Corporation; a subsidiary of RPM International, Inc.
   6. Sherwin-Williams Company (The).
   7. Valspar Corporation - Architectural (Pro).

B. Products: Subject to compliance with requirements, available products that may be incorporated into the Work include, but are not limited to products listed in the Exterior Painting Schedule for the paint category indicated.

2.02 PAINT, GENERAL

A. MPI Standards: Products shall comply with MPI standards indicated and shall be listed in its "MPI Approved Products Lists."

B. Material Compatibility:
   1. Materials for use within each paint system shall be compatible with one another and substrates indicated, under conditions of service and application as demonstrated by manufacturer, based on testing and field experience.

2. For each coat in a paint system, products shall be recommended in writing by topcoat manufacturers for use in paint system and on substrate indicated.

C. Meet the DFCM requirements for High Performance Building Standards

D. Colors: As selected by Architect from manufacturer's full range as indicated in a color schedule.
   1. Twenty percent of surface area will be painted with deep tones.

2.03 SOURCE QUALITY CONTROL

A. Testing of Paint Materials: Owner reserves the right to invoke the following procedure:
   1. Owner will engage the services of a qualified testing agency to sample paint materials. Contractor will be notified in advance and may be present when samples are taken. If paint materials have already been delivered to Project site, samples may be taken at Project site. Samples will be identified, sealed, and certified by testing agency.
   2. Testing agency will perform tests for compliance with product requirements.
   3. Owner may direct Contractor to stop applying paints if test results show materials being used do not comply with product requirements. Contractor shall remove noncomplying paint materials from Project site, pay for testing, and repaint surfaces painted with rejected materials. Contractor will be required to remove rejected materials from previously painted surfaces if, on repainting with complying materials, the two paints are incompatible.

PART 3 EXECUTION

3.01 EXAMINATION

A. Examine substrates and conditions, with Applicator present, for compliance with requirements for maximum moisture content and other conditions affecting performance of the Work.

B. Maximum Moisture Content of Substrates: When measured with an electronic moisture meter as follows:
   1. Concrete: 12 percent.
   2. Fiber-Cement Board: 12 percent.
   3. Masonry (Clay and CMUs): 12 percent.
   4. Wood: 15 percent.
   5. Portland Cement Plaster: 12 percent.
   6. Gypsum Board: 12 percent.

C. Portland Cement Plaster Substrates: Verify that plaster is fully cured.

D. Exterior Gypsum Board Substrates: Verify that finishing compound is sanded smooth.

E. Verify suitability of substrates, including surface conditions and compatibility, with existing finishes and primers.

F. Proceed with coating application only after unsatisfactory conditions have been corrected.
   1. Application of coating indicates acceptance of surfaces and conditions.

3.02 PREPARATION

A. Comply with manufacturer's written instructions and recommendations in "MPI Architectural Painting Specification Manual" applicable to substrates and paint systems indicated.

B. Remove hardware, covers, plates, and similar items already in place that are removable and are not to be painted. If removal is impractical or impossible because of size or weight of item, provide surface-applied protection before surface preparation and painting.
   1. After completing painting operations, use workers skilled in the trades involved to reinstall items that were removed. Remove surface-applied protection.

C. Clean substrates of substances that could impair bond of paints, including dust, dirt, oil, grease, and incompatible paints and encapsulants.
   1. Remove incompatible primers and reprime substrate with compatible primers or apply tie coat as required to produce paint systems indicated.

D. Concrete Substrates: Remove release agents, curing compounds, efflorescence, and chalk. Do not paint surfaces if moisture content or alkalinity of surfaces to be painted exceeds that permitted in manufacturer's written instructions.

E. Masonry Substrates: Remove efflorescence and chalk. Do not paint surfaces if moisture content or alkalinity of surfaces or mortar joints exceeds that permitted in manufacturer's written instructions.

F. Steel Substrates: Remove rust, loose mill scale, and shop primer if any. Clean using methods recommended in writing by paint manufacturer but not less than the following:
   1. SSPC-SP 7/NACE No. 4.
   2. SSPC-SP 11.

G. Shop-Primed Steel Substrates: Clean field welds, bolted connections, and areas where shop paint is abraded. Paint exposed areas with the same material as used for shop priming to comply with SSPC-PA 1 for touching up shop-primed surfaces.

H. Galvanized-Metal Substrates: Remove grease and oil residue from galvanized sheet metal by mechanical methods to produce clean, lightly etched surfaces that promote adhesion of subsequently applied paints.

I. Aluminum Substrates: Remove loose surface oxidation.

J. Wood Substrates:
   1. Scrape and clean knots. Before applying primer, apply coat of knot sealer recommended in writing by topcoat manufacturer for exterior use in paint system indicated.
   2. Sand surfaces that will be exposed to view, and dust off.
   3. Prime edges, ends, faces, undersides, and backsides of wood.
   4. After priming, fill holes and imperfections in the finish surfaces with putty or plastic wood filler. Sand smooth when dried.

K. Plastic Trim Fabrication Substrates: Remove dust, dirt, and other foreign material that might impair bond of paints to substrates.

3.03 APPLICATION

A. Apply paints according to manufacturer's written instructions and recommendations in "MPI Architectural Painting Specification Manual."
   1. Use applicators and techniques suited for paint and substrate indicated.
   2. Paint surfaces behind movable items same as similar exposed surfaces. Before final installation, paint surfaces behind permanently fixed items with prime coat only.
   3. Paint both sides and edges of exterior doors and entire exposed surface of exterior door frames.
   4. Paint entire exposed surface of window frames and sashes.
   5. Do not paint over labels of independent testing agencies or equipment name, identification, performance rating, or nomenclature plates.
   6. Primers specified in painting schedules may be omitted on items that are factory primed or factory finished if acceptable to topcoat manufacturers.

B. Tint undercoats same color as topcoat, but tint each undercoat a lighter shade to facilitate identification of each coat if multiple coats of same material are to be applied. Provide sufficient difference in shade of undercoats to distinguish each separate coat.

C. If undercoats or other conditions show through topcoat, apply additional coats until cured film has a uniform paint finish, color, and appearance.

D. Apply paints to produce surface films without cloudiness, spotting, holidays, laps, brush marks, roller tracking, runs, sags, ropiness, or other surface imperfections. Cut in sharp lines and color breaks.

E. Painting Fire Suppression, Plumbing, HVAC, Electrical, Communication, and Electronic Safety and Security Work:
   1. Paint the following work where exposed to view:

a. Equipment, including panelboards and switch gear.
b. Uninsulated metal piping.
c. Uninsulated plastic piping.
d. Pipe hangers and supports.
e. Metal conduit.
f. Plastic conduit.
g. Tanks that do not have factory-applied final finishes.
h. Ductwork.

3.04 FIELD QUALITY CONTROL

A. Dry Film Thickness Testing: Owner may engage the services of a qualified testing and inspecting agency to inspect and test paint for dry film thickness.
1. Contractor shall touch up and restore painted surfaces damaged by testing.
2. If test results show that dry film thickness of applied paint does not comply with paint manufacturer's written recommendations, Contractor shall pay for testing and apply additional coats as needed to provide dry film thickness that complies with paint manufacturer's written recommendations.

3.05 CLEANING AND PROTECTION

A. At end of each workday, remove rubbish, empty cans, rags, and other discarded materials from Project site.

B. After completing paint application, clean spattered surfaces. Remove spattered paints by washing, scraping, or other methods. Do not scratch or damage adjacent finished surfaces.

C. Protect work of other trades against damage from paint application. Correct damage to work of other trades by cleaning, repairing, replacing, and refinishing, as approved by Architect, and leave in an undamaged condition.

D. At completion of construction activities of other trades, touch up and restore damaged or defaced painted surfaces.

3.06 EXTERIOR PAINTING SCHEDULE

A. Concrete Substrates, Nontraffic Surfaces:
1. Latex System MPI EXT 3.1A:
a. Prime Coat: Primer, alkali resistant, water based, MPI #3.
b. Intermediate Coat: Latex, exterior, matching topcoat.
c. Topcoat: Latex, exterior, low sheen (MPI Gloss Level 3-4), MPI #15.

B. CMU Substrates:
1. Latex over Alkali-Resistant Primer System MPI EXT 4.2L:
a. Prime Coat: Primer, alkali resistant, water based, MPI #3.
b. Intermediate Coat: Latex, exterior, matching topcoat.
c. Topcoat: Latex, exterior, low sheen (MPI Gloss Level 3-4), MPI #15.

C. Steel and Iron Substrates:
1. Water-Based Light Industrial Coating System MPI EXT 5.1M:
a. Prime Coat: Primer, rust inhibitive, water based MPI #107.
b. Intermediate Coat: Light industrial coating, exterior, water based, matching topcoat.
c. Topcoat: Light industrial coating, exterior, water based, semi-gloss (MPI Gloss Level 3), MPI #161.

D. Galvanized-Metal Substrates:
1. Latex System MPI EXT 5.3H:
a. Prime Coat: Primer, galvanized, water based, MPI #134.
b. Intermediate Coat: Latex, exterior, matching topcoat.
c. Topcoat: Latex, exterior, semi-gloss (MPI Gloss Level 3-4), MPI #15.

E. Aluminum Substrates:

1. Latex System MPI EXT 5.4H:
   a. Prime Coat: Primer, quick dry, for aluminum, MPI #95.
   b. Intermediate Coat: Latex, exterior, matching topcoat.
   c. Topcoat: Latex, exterior, low sheen (MPI Gloss Level 3-4), MPI #15.

F. Stainless-Steel Substrates:
   1. Latex System MPI EXT 5.6F:
      a. Prime Coat: Primer, bonding, solvent based, MPI #69.
      b. Intermediate Coat: Latex, exterior, matching topcoat.
      c. Topcoat: Latex, exterior, low sheen (MPI Gloss Level 3-4), MPI #15.

G. Wood Substrates: Glued-laminated construction.
   1. Latex over Latex Primer System MPI EXT 6.1L:
      a. Prime Coat: Primer, latex for exterior wood, MPI #6.
      b. Intermediate Coat: Latex, exterior, matching topcoat.
      c. Topcoat: Latex, exterior, low sheen (MPI Gloss Level 3-4), MPI #15.

END OF SECTION 099113

SECTION 099123
INTERIOR PAINTING

PART 1 GENERAL

1.01 RELATED DOCUMENTS

A. Drawings and general provisions of the Contract, including General and Supplementary Conditions and Division 01 Specification Sections, apply to this Section.

1.02 SUMMARY

A. Section includes surface preparation and the application of paint systems on the following interior substrates:
   1. Concrete.
   2. Cement board.
   3. Concrete masonry units (CMUs).
   4. Steel and iron.
   5. Wood.
   6. Gypsum board.

B. Related Requirements:
   1. Section 051200 "Structural Steel Framing" for shop priming structural steel.
   2. Section 055000 "Metal Fabrications" for shop priming metal fabrications.
   3. Section 099600 "High-Performance Coatings" for shop area.

1.03 DEFINITIONS

A. MPI Gloss Level 1: Not more than five units at 60 degrees and 10 units at 85 degrees, according to ASTM D 523.

B. MPI Gloss Level 2: Not more than 10 units at 60 degrees and 10 to 35 units at 85 degrees, according to ASTM D 523.

C. MPI Gloss Level 3: 10 to 25 units at 60 degrees and 10 to 35 units at 85 degrees, according to ASTM D 523.

D. MPI Gloss Level 4: 20 to 35 units at 60 degrees and not less than 35 units at 85 degrees, according to ASTM D 523.

E. MPI Gloss Level 5: 35 to 70 units at 60 degrees, according to ASTM D 523.

F. MPI Gloss Level 6: 70 to 85 units at 60 degrees, according to ASTM D 523.

G. MPI Gloss Level 7: More than 85 units at 60 degrees, according to ASTM D 523.

1.04 ACTION SUBMITTALS

A. Product Data: For each type of product. Include preparation requirements and application instructions.
   1. Include Printout of current "MPI Approved Products List" for each product category specified, with the proposed product highlighted.
   2. Indicate VOC content.

B. Sustainable Design Submittals:
   1. Meet the requirements in the DFCM High Performance Building Design Standards.

C. Samples for Initial Selection: For each type of topcoat product.

D. Samples for Verification: For each type of paint system and in each color and gloss of topcoat.
   1. Submit Samples on rigid backing, 8 inches (203.2 mm) square.
   2. Apply coats on Samples in steps to show each coat required for system.
   3. Label each coat of each Sample.
   4. Label each Sample for location and application area.

E. Product List: Cross-reference to paint system and locations of application areas. Use same designations indicated on Drawings and in schedules. Include color designations.

1.05 MAINTENANCE MATERIAL SUBMITTALS

A. Furnish extra materials that match products installed and that are packaged with protective covering for storage and identified with labels describing contents.
   1. Paint: 5 percent, but not less than 1 gal. (3.8 L) of each material and color applied.

1.06 QUALITY ASSURANCE

A. Mockups: Apply mockups of each paint system indicated and each color and finish selected to verify preliminary selections made under Sample submittals and to demonstrate aesthetic effects and set quality standards for materials and execution.
   1. Architect will select one surface to represent surfaces and conditions for application of each paint system.
      a. Vertical and Horizontal Surfaces: Provide samples of at least 100 sq. ft. (9 sq. m).
      b. Other Items: Architect will designate items or areas required.
   2. Final approval of color selections will be based on mockups.
      a. If preliminary color selections are not approved, apply additional mockups of additional colors selected by Architect at no added cost to Owner.
   3. Approval of mockups does not constitute approval of deviations from the Contract Documents contained in mockups unless Architect specifically approves such deviations in writing.
   4. Subject to compliance with requirements, approved mockups may become part of the completed Work if undisturbed at time of Substantial Completion.

1.07 DELIVERY, STORAGE, AND HANDLING

A. Store materials not in use in tightly covered containers in well-ventilated areas with ambient temperatures continuously maintained at not less than 45 deg F (7 deg C).
   1. Maintain containers in clean condition, free of foreign materials and residue.
   2. Remove rags and waste from storage areas daily.

1.08 FIELD CONDITIONS

A. Apply paints only when temperature of surfaces to be painted and ambient air temperatures are between 50 and 95 deg F (10 and 35 deg C).

B. Do not apply paints when relative humidity exceeds 85 percent; at temperatures less than 5 deg F (3 deg C) above the dew point; or to damp or wet surfaces.

PART 2 PRODUCTS

2.01 MANUFACTURERS

A. Manufacturers: Subject to compliance with requirements, available manufacturers offering products that may be incorporated into the Work include, but are not limited to the following:
   1. Behr Process Corporation.
   2. Pratt & Lambert.
   3. Sherwin-Williams Company (The).
   4. Valspar Corporation - Architectural (Pro).

B. Products: Subject to compliance with requirements, available products that may be incorporated into the Work include, but are not limited to products listed in the Interior Painting Schedule for the paint category indicated.

2.02 PAINT, GENERAL

A. MPI Standards: Products shall comply with MPI standards indicated and shall be listed in its "MPI Approved Products Lists."

B. Material Compatibility:
   1. Materials for use within each paint system shall be compatible with one another and substrates indicated, under conditions of service and application as demonstrated by manufacturer, based on testing and field experience.

2. For each coat in a paint system, products shall be recommended in writing by topcoat manufacturers for use in paint system and on substrate indicated.

C. Meet the requirements in the DFCM High Performance Building Design Standards.

D. Colors: Match Architect's samples or As indicated in a color schedule.
1. Ten percent of surface area will be painted with deep tones.

2.03 SOURCE QUALITY CONTROL

A. Testing of Paint Materials: Owner reserves the right to invoke the following procedure:
1. Owner will engage the services of a qualified testing agency to sample paint materials. Contractor will be notified in advance and may be present when samples are taken. If paint materials have already been delivered to Project site, samples may be taken at Project site. Samples will be identified, sealed, and certified by testing agency.
2. Testing agency will perform tests for compliance with product requirements.
3. Owner may direct Contractor to stop applying paints if test results show materials being used do not comply with product requirements. Contractor shall remove noncomplying paint materials from Project site, pay for testing, and repaint surfaces painted with rejected materials. Contractor will be required to remove rejected materials from previously painted surfaces if, on repainting with complying materials, the two paints are incompatible.

PART 3 EXECUTION

3.01 EXAMINATION

A. Examine substrates and conditions, with Applicator present, for compliance with requirements for maximum moisture content and other conditions affecting performance of the Work.

B. Maximum Moisture Content of Substrates: When measured with an electronic moisture meter as follows:
1. Concrete: 12 percent.
2. Fiber-Cement Board: 12 percent.
3. Masonry (Clay and CMUs): 12 percent.
4. Wood: 15 percent.
5. Gypsum Board: 12 percent.
6. Plaster: 12 percent.

C. Gypsum Board Substrates: Verify that finishing compound is sanded smooth.

D. Plaster Substrates: Verify that plaster is fully cured.

E. Spray-Textured Ceiling Substrates: Verify that surfaces are dry.

F. Verify suitability of substrates, including surface conditions and compatibility, with existing finishes and primers.

G. Proceed with coating application only after unsatisfactory conditions have been corrected.
1. Application of coating indicates acceptance of surfaces and conditions.

3.02 PREPARATION

A. Comply with manufacturer's written instructions and recommendations in "MPI Architectural Painting Specification Manual" applicable to substrates and paint systems indicated.

B. Remove hardware, covers, plates, and similar items already in place that are removable and are not to be painted. If removal is impractical or impossible because of size or weight of item, provide surface-applied protection before surface preparation and painting.
1. After completing painting operations, use workers skilled in the trades involved to reinstall items that were removed. Remove surface-applied protection if any.

C. Clean substrates of substances that could impair bond of paints, including dust, dirt, oil, grease, and incompatible paints and encapsulants.
1. Remove incompatible primers and re-prime substrate with compatible primers or apply tie coat as required to produce paint systems indicated.

D. Concrete Substrates: Remove release agents, curing compounds, efflorescence, and chalk. Do not paint surfaces if moisture content or alkalinity of surfaces to be painted exceeds that permitted in manufacturer's written instructions.

E. Masonry Substrates: Remove efflorescence and chalk. Do not paint surfaces if moisture content or alkalinity of surfaces or mortar joints exceeds that permitted in manufacturer's written instructions.

F. Steel Substrates: Remove rust, loose mill scale, and shop primer, if any. Clean using methods recommended in writing by paint manufacturer but not less than the following:
   1. SSPC-SP 3.

G. Shop-Primed Steel Substrates: Clean field welds, bolted connections, and areas where shop paint is abraded. Paint exposed areas with the same material as used for shop priming to comply with SSPC-PA 1 for touching up shop-primed surfaces.

H. Galvanized-Metal Substrates: Remove grease and oil residue from galvanized sheet metal by mechanical methods to produce clean, lightly etched surfaces that promote adhesion of subsequently applied paints.

I. Aluminum Substrates: Remove loose surface oxidation.

J. Wood Substrates:
   1. Scrape and clean knots, and apply coat of knot sealer before applying primer.
   2. Sand surfaces that will be exposed to view, and dust off.
   3. Prime edges, ends, faces, undersides, and backsides of wood.
   4. After priming, fill holes and imperfections in the finish surfaces with putty or plastic wood filler. Sand smooth when dried.

K. Cotton or Canvas Insulation Covering Substrates: Remove dust, dirt, and other foreign material that might impair bond of paints to substrates.

3.03 APPLICATION

A. Apply paints according to manufacturer's written instructions and to recommendations in "MPI Manual."
   1. Use applicators and techniques suited for paint and substrate indicated.
   2. Paint surfaces behind movable equipment and furniture same as similar exposed surfaces. Before final installation, paint surfaces behind permanently fixed equipment or furniture with prime coat only.
   3. Paint front and backsides of access panels, removable or hinged covers, and similar hinged items to match exposed surfaces.
   4. Do not paint over labels of independent testing agencies or equipment name, identification, performance rating, or nomenclature plates.
   5. Primers specified in painting schedules may be omitted on items that are factory primed or factory finished if acceptable to topcoat manufacturers.

B. Tint each undercoat a lighter shade to facilitate identification of each coat if multiple coats of same material are to be applied. Tint undercoats to match color of topcoat, but provide sufficient difference in shade of undercoats to distinguish each separate coat.

C. If undercoats or other conditions show through topcoat, apply additional coats until cured film has a uniform paint finish, color, and appearance.

D. Apply paints to produce surface films without cloudiness, spotting, holidays, laps, brush marks, roller tracking, runs, sags, ropiness, or other surface imperfections. Cut in sharp lines and color breaks.

E. Painting Fire Suppression, Plumbing, HVAC, Electrical, Communication, and Electronic Safety and Security Work:
   1. Paint the following work where exposed in equipment rooms:
      a. Tanks that do not have factory-applied final finishes.

b. Duct, equipment, and pipe insulation having cotton or canvas insulation covering or other paintable jacket material.

2. Paint the following work where exposed in occupied spaces:
   a. Duct, equipment, and pipe insulation having cotton or canvas insulation covering or other paintable jacket material.
   b. Other items as directed by Architect.
3. Paint portions of internal surfaces of metal ducts, without liner, behind air inlets and outlets that are visible from occupied spaces.

3.04 FIELD QUALITY CONTROL

A. Dry Film Thickness Testing: Owner may engage the services of a qualified testing and inspecting agency to inspect and test paint for dry film thickness.
   1. Contractor shall touch up and restore painted surfaces damaged by testing.
   2. If test results show that dry film thickness of applied paint does not comply with paint manufacturer's written recommendations, Contractor shall pay for testing and apply additional coats as needed to provide dry film thickness that complies with paint manufacturer's written recommendations.

3.05 CLEANING AND PROTECTION

A. At end of each workday, remove rubbish, empty cans, rags, and other discarded materials from Project site.

B. After completing paint application, clean spattered surfaces. Remove spattered paints by washing, scraping, or other methods. Do not scratch or damage adjacent finished surfaces.

C. Protect work of other trades against damage from paint application. Correct damage to work of other trades by cleaning, repairing, replacing, and refinishing, as approved by Architect, and leave in an undamaged condition.

D. At completion of construction activities of other trades, touch up and restore damaged or defaced painted surfaces.

3.06 INTERIOR PAINTING SCHEDULE

A. Cement Board Substrates:
   1. Institutional Low-Odor/VOC Latex System MPI INT 3.3G:
      a. Prime Coat: Primer sealer, interior, institutional low odor/VOC, MPI #149.
      b. Topcoat: Latex, interior, institutional low odor/VOC, semi-gloss (MPI Gloss Level 5), MPI #147.
   2. Water-Based Light Industrial Coating System MPI INT 3.3H:
      a. Prime Coat: Primer, alkali resistant, water based, MPI #3.
      b. Topcoat: Light industrial coating, interior, water based, semi-gloss (MPI Gloss Level 5), MPI #153.

B. CMU Substrates:
   1. Institutional Low-Odor/VOC Latex System MPI INT 4.2E:
      a. Block Filler: Block filler, latex, interior/exterior, MPI #4.
      b. Topcoat: Latex, interior, institutional low odor/VOC, semi-gloss (MPI Gloss Level 5), MPI #147.

C. Steel Substrates:
      a. Topcoat: Latex, interior (MPI Gloss Level 4), MPI #43.
   2. Latex over Shop-Applied Quick-Drying Shop Primer System MPI INT 5.1X:
      a. Prime Coat: Primer, quick dry, for shop application, MPI #275.
      b. Topcoat: Latex, interior (MPI Gloss Level 4), MPI #43.
   3. Institutional Low-Odor/VOC Latex System MPI INT 5.1S:
      a. Prime Coat: Primer, rust inhibitive, water based MPI #107.
      b. Topcoat: Latex, interior, institutional low odor/VOC (MPI Gloss Level 5), MPI #147.
   4. High-Performance Architectural Latex System MPI INT 5.1R:

a. Prime Coat: Primer, alkyd, quick dry, for metal, MPI #76.
b. Topcoat: Latex, interior, high performance architectural (MPI Gloss Level 4), MPI #140.

5. Water-Based Dry-Fall System MPI INT 5.1C:
   a. Prime Coat: Primer, alkyd, quick dry, for metal, MPI #76.
   b. Topcoat: Dry fall, latex (MPI Gloss Level 3), MPI #155.
6. Water-Based Dry-Fall over Shop-Applied Quick-Drying Shop Primer System MPI INT 5.1CCC:
   a. Prime Coat: Primer, quick dry, for shop application, MPI #275.
   b. Topcoat: Dry fall, latex (MPI Gloss Level 5), MPI #226.

D. Galvanized-Metal Substrates:
1. Institutional Low-Odor/VOC Latex System MPI INT 5.3N:
   a. Prime Coat: Primer, galvanized, water based, MPI #134.
   b. Intermediate Coat: Latex, interior, institutional low odor/VOC, matching topcoat.
   c. Topcoat: Latex, interior, institutional low odor/VOC, semi-gloss (MPI Gloss Level 5), MPI #147.

E. Aluminum (Not Anodized or Otherwise Coated) Substrates:
1. Institutional Low-Odor/VOC Latex System MPI INT 5.4G:
   a. Prime Coat: Primer, quick dry, for aluminum, MPI #95.
   b. Intermediate Coat: Latex, interior, institutional low odor/VOC, matching topcoat.
   c. Topcoat: Latex, interior, institutional low odor/VOC, semi-gloss (MPI Gloss Level 5), MPI #147.

F. Stainless Steel Substrates:
1. High-Performance Architectural Latex System MPI INT 5.6G:
   a. Prime Coat: Primer, bonding, solvent based, MPI #69.
   b. Intermediate Coat: Latex, interior, high performance architectural, matching topcoat.
   c. Topcoat: Latex, interior, high performance architectural, semi-gloss (MPI Gloss Level 5), MPI #141.

G. Wood Substrates: Glued-laminated construction.
1. Institutional Low-Odor/VOC Latex System MPI INT 6.1Q:
   a. Prime Coat: Primer, latex, for interior wood, MPI #39.
   b. Intermediate Coat: Latex, interior, institutional low odor/VOC, matching topcoat.
   c. Topcoat: Latex, interior, institutional low odor/VOC, semi-gloss (MPI Gloss Level 5), MPI #147.
2. High-Performance Architectural Latex System MPI INT 6.1N:
   a. Prime Coat: Primer, latex, for interior wood, MPI #39.
   b. Intermediate Coat: Latex, interior, high performance architectural, matching topcoat.
   c. Topcoat: Latex, interior, high performance architectural, semi-gloss (MPI Gloss Level 5), MPI #141.

H. Gypsum Board Substrates:
1. Institutional Low-Odor/VOC Latex System MPI INT 9.2M:
   a. Prime Coat: Primer sealer, interior, institutional low odor/VOC, MPI #149.
   b. Intermediate Coat: Latex, interior, institutional low odor/VOC, matching topcoat.
   c. Topcoat: Latex, interior, institutional low odor/VOC, semi-gloss (MPI Gloss Level 5), MPI #147.

END OF SECTION 099123

SECTION 099600
HIGH-PERFORMANCE COATINGS

PART 1 GENERAL

1.01 REFERENCE STANDARDS

A. ASTM D1653 - Standard Test Methods for Water Vapor Transmission of Organic Coating Films; 2013 (Reapproved 2021).

1.02 RELATED DOCUMENTS

A. Drawings and general provisions of the Contract, including General and Supplementary Conditions and Division 01 Specification Sections, apply to this Section.

1.03 SUMMARY

A. Section includes surface preparation and the application of high-performance coating systems on the following substrates:
   1. Interior Substrates:
      a. Concrete, vertical and horizontal surfaces.
      b. Concrete masonry units (CMUs).
      c. Steel.
      d. Gypsum board.

B. Related Requirements:
   1. Section 051200 "Structural Steel Framing" for shop priming of structural steel with primers specified in this Section.
   2. Section 055213 "Pipe and Tube Railings" for shop pipe and tube railings with coatings specified in this Section.
   3. Section 099113 "Exterior Painting" for general field painting.
   4. Section 099123 "Interior Painting" for general field painting.

1.04 DEFINITIONS

A. MPI Gloss Level 5: 35 to 70 units at 60 degrees, according to ASTM D 523.

B. MPI Gloss Level 6: 70 to 85 units at 60 degrees, according to ASTM D 523.

C. MPI Gloss Level 7: More than 85 units at 60 degrees, according to ASTM D 523.

1.05 ACTION SUBMITTALS

A. Product Data: For each type of product. Include preparation requirements and application instructions.
   1. Include printout of current "MPI Approved Products List" for each product category specified, with the proposed product highlighted.
   2. Indicate VOC content.

B. Sustainable Design Submittals:
   1. Meet the requirements as outlined in the DFCM High Performance Building Standards.

C. Samples for Initial Selection: For each type of topcoat product indicated.

D. Samples for Verification: For each type of coating system and each color and gloss of topcoat indicated.
   1. Submit Samples on rigid backing, 8 inches (203.2 mm) square.
   2. Apply coats on Samples in steps to show each coat required for system.
   3. Label each coat of each Sample.
   4. Label each Sample for location and application area.

E. Product List: Cross-reference to coating system and locations of application areas. Use same designations indicated on Drawings and in schedules. Include color designations.

1.06 MAINTENANCE MATERIAL SUBMITTALS

A. Furnish extra materials that match products installed and that are packaged with protective covering for storage and identified with labels describing contents.
   1. Coatings: 5 percent, but not less than 1 gal. (3.8 L) Insert number of each material and color applied.

1.07 QUALITY ASSURANCE

A. Mockups: Apply mockups of each coating system indicated to verify preliminary selections made under Sample submittals and to demonstrate aesthetic effects and set quality standards for materials and execution.
   1. Architect will select one surface to represent surfaces and conditions for application of each coating system.
      a. Wall and Ceiling Surfaces: Provide samples of at least 100 sq. ft. (9 sq. m).
      b. Other Items: Architect will designate items or areas required.
   2. Final approval of color selections will be based on mockups.
      a. If preliminary color selections are not approved, apply additional mockups of additional colors selected by Architect at no added cost to Owner.
   3. Approval of mockups does not constitute approval of deviations from the Contract Documents contained in mockups unless Architect specifically approves such deviations in writing.
   4. Subject to compliance with requirements, approved mockups may become part of the completed Work if undisturbed at time of Substantial Completion.

1.08 DELIVERY, STORAGE, AND HANDLING

A. Store materials not in use in tightly covered containers in well-ventilated areas with ambient temperatures continuously maintained at not less than 45 deg F (7 deg C).
   1. Maintain containers in clean condition, free of foreign materials and residue.
   2. Remove rags and waste from storage areas daily.

1.09 FIELD CONDITIONS

A. Apply coatings only when temperature of surfaces to be coated and ambient air temperatures are between 50 and 95 deg F (10 and 35 deg C).

B. Do not apply coatings when relative humidity exceeds 85 percent; at temperatures less than 5 deg F (3 deg C) above the dew point; or to damp or wet surfaces.

C. Do not apply exterior coatings in snow, rain, fog, or mist.

PART 2 PRODUCTS

2.01 MANUFACTURERS

A. Basis-of-Design Product: Subject to compliance with requirements, provide Sherwin-Williams Company (The); Kem Cati-Coat® HS Epoxy Filler/Sealer, MACROPOXY® 646-100 FAST CURE EPOXY, Hi-Solids Polyurethane 250 or a comparable product by one of the following:
   1. Behr Process Corporation.
   2. Benjamin Moore & Co.
   3. Devoe Paint Company; Akzo Nobel.
   4. PPG Paints.
   5. Tnemec.

B. Products: Subject to compliance with requirements, available products that may be incorporated into the Work include, but are not limited to products listed in the Exterior High-Performance Coating Schedule or Interior High-Performance Coating Schedule for the coating category indicated.

2.02 HIGH-PERFORMANCE COATINGS, GENERAL

A. MPI Standards: Products shall comply with MPI standards indicated and shall be listed in its "MPI Approved Products Lists."

B. Material Compatibility:
   1. Materials for use within each paint system shall be compatible with one another and substrates indicated, under conditions of service and application as demonstrated by manufacturer, based on testing and field experience.
   2. For each coat in a paint system, products shall be recommended in writing by topcoat manufacturers for use in paint system and on substrate indicated.
   3. Products shall be of same manufacturer for each coat in a coating system.

C. The criterion for product selection is to achieve a 1 perm or less perm rating per grains/day as per ASTM D1653, method B in a singular application or a two-step application.

D. Colors: Match Architect's samples and as indicated in color schedule.

2.03 SOURCE QUALITY CONTROL

A. Testing of Coating Materials: Owner reserves the right to invoke the following procedure:
   1. Owner will engage the services of a qualified testing agency to sample coating materials. Contractor will be notified in advance and may be present when samples are taken. If coating materials have already been delivered to Project site, samples may be taken at Project site. Samples will be identified, sealed, and certified by testing agency.
   2. Testing agency will perform tests for compliance with product requirements.
   3. Owner may direct Contractor to stop applying coatings if test results show materials being used do not comply with product requirements. Contractor shall remove noncomplying coating materials from Project site, pay for testing, and recoat surfaces coated with rejected materials. Contractor will be required to remove rejected materials from previously coated surfaces if, on recoating with complying materials, the two coatings are incompatible.

PART 3 EXECUTION

3.01 EXAMINATION

A. Examine substrates and conditions, with Applicator present, for compliance with requirements for maximum moisture content and other conditions affecting performance of the Work.

B. Maximum Moisture Content of Substrates: When measured with an electronic moisture meter as follows:
   1. Concrete: 12 percent.
   2. Fiber-Cement Board: 12 percent.
   3. Masonry (Clay and CMUs): 12 percent.
   4. Wood: 15 percent.
   5. Gypsum Board: 12 percent.
   6. Plaster: 12 percent.

C. Gypsum Board Substrates: Verify that finishing compound is sanded smooth.

D. Plaster Substrates: Verify that plaster is fully cured.

E. Verify suitability of substrates, including surface conditions and compatibility, with existing finishes and primers.

F. Proceed with coating application only after unsatisfactory conditions have been corrected.
   1. Application of coating indicates acceptance of surfaces and conditions.

3.02 PREPARATION

A. Comply with manufacturer's written instructions and recommendations in "MPI Architectural Painting Specification Manual" applicable to substrates and coating systems indicated.

B. Remove hardware, covers, plates, and similar items already in place that are removable and are not to be painted. If removal is impractical or impossible because of size or weight of item, provide surface-applied protection before surface preparation and painting.
   1. After completing painting operations, use workers skilled in the trades involved to reinstall items that were removed. Remove surface-applied protection if any.

C. Clean substrates of substances that could impair bond of coatings, including dust, dirt, oil, grease, and incompatible paints and encapsulants.
   1. Remove incompatible primers and reprime substrate with compatible primers or apply tie coat as required to produce coating systems indicated.

D. Concrete Substrates: Remove release agents, curing compounds, efflorescence, and chalk. Do not coat surfaces if moisture content or alkalinity of surfaces to be coated exceeds that permitted in manufacturer's written instructions.
   1. Clean surfaces with pressurized water. Use pressure range of 1500 to 4000 psi (27579.04 kPa) at 6 to 12 inches (150 to 300 mm).
   2. Abrasive blast clean surfaces to comply with SSPC-SP 7/NACE No. 4.

E. Masonry Substrates: Remove efflorescence and chalk. Do not coat surfaces if moisture content, alkalinity of surfaces, or alkalinity of mortar joints exceeds that permitted in manufacturer's written instructions.
   1. Clean surfaces with pressurized water. Use pressure range of 100 to 600 psi (4136.86 kPa) at 6 to 12 inches (150 to 300 mm).

F. Steel Substrates: Remove rust, loose mill scale, and shop primer if any. Clean using methods recommended in writing by paint manufacturer.
   1. SSPC-SP 10/NACE No. 2.

G. Shop-Primed Steel Substrates: Clean field welds, bolted connections, and areas where shop paint is abraded. Paint exposed areas with the same material as used for shop priming to comply with SSPC-PA 1 for touching up shop-primed surfaces.

H. Galvanized-Metal Substrates: Remove grease and oil residue from galvanized sheet metal by mechanical methods to produce clean, lightly etched surfaces that promote adhesion of subsequently applied coatings.

I. Aluminum Substrates: Remove loose surface oxidation.

J. Wood Substrates:
   1. Scrape and clean knots. Before applying primer, apply coat of knot sealer that is recommended in writing by topcoat manufacturer for coating system indicated.
   2. Sand surfaces that will be exposed to view and dust off.
   3. Prime edges, ends, faces, undersides, and backsides of wood.
   4. After priming, fill holes and imperfections in the finish surfaces with filler that is recommended in writing by topcoat manufacturer for coating system indicated. Sand smooth when dried.

3.03 APPLICATION

A. Apply high-performance coatings according to manufacturer's written instructions and recommendations in "MPI Architectural Painting Specification Manual."
   1. Use applicators and techniques suited for coating and substrate indicated.
   2. Coat surfaces behind movable equipment and furniture same as similar exposed surfaces. Before final installation, coat surfaces behind permanently fixed equipment or furniture with prime coat only.
   3. Coat backsides of access panels, removable or hinged covers, and similar hinged items to match exposed surfaces.
   4. Do not apply coatings over labels of independent testing agencies or equipment name, identification, performance rating, or nomenclature plates.

B. Tint each undercoat a lighter shade to facilitate identification of each coat if multiple coats of the same material are to be applied. Tint undercoats to match color of finish coat, but provide sufficient difference in shade of undercoats to distinguish each separate coat.

C. If undercoats or other conditions show through final coat, apply additional coats until cured film has a uniform coating finish, color, and appearance.

D. Apply coatings to produce surface films without cloudiness, spotting, holidays, laps, brush marks, runs, sags, ropiness, or other surface imperfections. Produce sharp glass lines and color breaks.

3.04 FIELD QUALITY CONTROL

A. Dry Film Thickness Testing: Owner may engage the services of a qualified testing and inspecting agency to inspect and test coatings for dry film thickness.
   1. Contractor shall touch up and restore coated surfaces damaged by testing.
   2. If test results show that dry film thickness of applied coating does not comply with coating manufacturer's written recommendations, Contractor shall pay for testing and apply additional coats as needed to provide dry film thickness that complies with coating manufacturer's written recommendations.

3.05 CLEANING AND PROTECTION

A. At end of each workday, remove rubbish, empty cans, rags, and other discarded materials from Project site.

B. After completing coating application, clean spattered surfaces. Remove spattered coatings by washing, scraping, or other methods. Do not scratch or damage adjacent finished surfaces.

C. Protect work of other trades against damage from coating operation. Correct damage to work of other trades by cleaning, repairing, replacing, and recoating, as approved by Architect, and leave in an undamaged condition.

D. At completion of construction activities of other trades, touch up and restore damaged or defaced coated surfaces.

3.06 INTERIOR HIGH-PERFORMANCE COATING SCHEDULE

A. CMU Substrates:
   1. Epoxy System MPI EXT 4.2E:
      a. Block Filler: Block filler, epoxy, MPI #116.
         1) Sherwin Williams Kem Cati-Coat® HS Epoxy Filler/Sealer.
      b. Intermediate Coat: Epoxy, matching topcoat.
      c. Topcoat: Epoxy, gloss, MPI #108. Low sheen required
         1) Sherwin Williams MACROPOXY® 646-100 FAST CURE EPOXY.
   2. Pigmented Polyurethane over High-Build Epoxy System MPI EXT 4.2G:
      a. Block Filler: Block filler, epoxy, MPI #116.
         1) Sherwin Willaims Kem Cati-Coat® HS Epoxy Filler/Sealer.
      b. Intermediate Coat: Epoxy, high build, low gloss, MPI #174.
         1) Sherwin Williams Hi-Solids Polyurethane 250.
      c. Topcoat: Polyurethane, two component, pigmented, gloss (MPI Gloss Level 6), MPI #174. Low sheen required.
         1) Sherwin Williams Hi-Solids Polyurethane 250.

B. Steel Substrates:
   1. Epoxy System MPI EXT 5.1F:
      a. Prime Coat: Primer, epoxy, anti-corrosive, for metal, MPI #101.
         1) Sherwin Williams MACROPOXY® 646-100 FAST CURE EPOXY.
      b. Topcoat: Epoxy, gloss, MPI #77.
         1) Sherwin Williams MACROPOXY® 646-100 FAST CURE EPOXY.
   2. Pigmented Polyurethane over Epoxy System MPI EXT 5.1H:
      a. Prime Coat: Primer, epoxy, anti-corrosive, for metal, MPI #101.
         1) Sherwin Williams MACROPOXY® 646-100 FAST CURE EPOXY.
      b. Intermediate Coat: Epoxy, gloss, MPI #77.
         1) Sherwin Williams Hi-Solids Polyurethane 250.
      c. Topcoat: Polyurethane, two component, pigmented, gloss (MPI Gloss Level 6), MPI #72.

1) Sherwin Williams Hi-Solids Polyurethane 250.

C. Wood Substrates: Glued-laminated construction.
1. Pigmented Polyurethane System MPI EXT 6.1J:
a. Prime Coat: Polyurethane, two component, pigmented, gloss, matching topcoat.
b. Intermediate Coat: Polyurethane, two component, pigmented, gloss, matching topcoat.
c. Topcoat: Polyurethane, two component, pigmented, gloss (MPI Gloss Level 6), MPI #72.
1) Sherwin Williams Hi-Solids Polyurethane 250.

D. Gypsum Board Substrates:
1. Epoxy System MPI INT 9.2E:
a. Prime Coat: Primer sealer, latex, interior, MPI #50.
1) Sherwin Williams MACROPOXY® 646-100 FAST CURE EPOXY.
b. Intermediate Coat: Epoxy, matching topcoat.
c. Topcoat: Epoxy, gloss, MPI #77.
1) Sherwin Williams Hi-Solids Polyurethane 250.
2. Epoxy-Modified Plyurethane System MPI INT 9.2F:
a. Prime Coat: Primer sealer, latex, interior, MPI #50.
1) Sherwin Williams MACROPOXY® 646-100 FAST CURE EPOXY.
b. Intermediate Coat: Epoxy-modified latex, matching topcoat.
c. Topcoat: Epoxy-modified latex, semi-gloss (MPI Gloss Level 5), MPI #215.
1) Sherwin Williams Hi-Solids Polyurethane 250.

END OF SECTION 099600

SECTION 102113.13
METAL TOILET COMPARTMENTS

PART 1 GENERAL

1.01 SECTION INCLUDES

A. Metal toilet compartments.

B. Urinal screens.

1.02 RELATED REQUIREMENTS

A. Section 061000 - Rough Carpentry: Blocking and supports.

B. Section 102800 - Toilet, Bath, and Laundry Accessories.

1.03 REFERENCE STANDARDS

A. ASTM A666 - Standard Specification for Annealed or Cold-Worked Austenitic Stainless Steel Sheet, Strip, Plate, and Flat Bar; 2023.

1.04 ADMINISTRATIVE REQUIREMENTS

A. Coordination: Coordinate the work with placement of support framing and anchors in walls and ceilings.

1.05 SUBMITTALS

A. See Section 013000 - Administrative Requirements, for submittal procedures.

B. Shop Drawings: Indicate partition plan, elevation views, dimensions, details of wall, floor, and ceiling supports, door swings.

C. Product Data: Provide data on panel construction, hardware, and accessories.

D. Samples: Submit two samples of partition panels, 4x4 inch (____x____ mm) in size illustrating panel finish, color, and sheen.

PART 2 PRODUCTS

2.01 MANUFACTURERS

A. Metal Toilet Compartments:
   1. ASI Global Partitions; Stainless Steel: www.asi-globalpartitions.com/#sle.
   2. Substitutions: Section 016000 - Product Requirements.

2.02 MATERIALS

A. Stainless Steel Sheet: ASTM A666, Type 304.

2.03 COMPONENTS

A. Toilet Compartments: Stainless steel, floor-mounted headrail-braced.

B. Doors, Panels, and Pilasters: Sheet steel faces, pressure bonded to sound-deadening core, corners made with corner clips or mitered, welded, and ground smooth.

C. Door and Panel Dimensions:
   1. Thickness: 1 inch (25 mm).
   2. Door Width: 24 inches (610 mm).
   3. Door Width for Handicapped Use: 36 inch (915 mm) , out-swinging.
   4. Height: 58 inches (1473 mm).

D. Pilasters: 1-1/4 inch (32 mm) thick, of sizes required to suit compartment width and spacing.

E. Urinal Screens: Wall mounted with two panel brackets, and floor-to-ceiling vertical upright consisting of tubular headrail stock and sockets anchored to floor and ceiling.

2.04 ACCESSORIES

A. Pilaster Shoes: Formed ASTM A666 Type 304 stainless steel with No.4 finish, 3 inches (175 mm) high, concealing floor fastenings.

1. Provide adjustment for floor variations with screw jack through steel saddles integral with pilaster.

B. Head Rails: Hollow stainless steel tube, 1 by 1-5/8 inches (25 by 41 mm) in size, with anti-grip strips and cast socket wall brackets.

C. Brackets: Satin stainless steel.

D. Attachments, Screws, and Bolts: Stainless steel, tamper-proof type.
1. For attaching panels and pilasters to brackets: Through-bolts and nuts ; tamper proof.

E. Hardware: Polished stainless steel:
1. Pivot hinges, gravity type, adjustable for door close positioning; two per door.
2. Thumb turn or sliding door latch with exterior emergency access feature.
3. Door strike and keeper with rubber bumper; mounted on pilaster in alignment with door latch.
4. Coat hook with rubber bumper; one per compartment, mounted on door.
5. Provide door pull for outswinging doors.

2.05 FINISHING

A. Stainless Steel Compartments: No. 4 finish.

PART 3 EXECUTION

3.01 EXAMINATION

A. Verify existing conditions before starting work.

B. Verify that field measurements are as indicated.

C. Verify correct spacing of and between plumbing fixtures.

D. Verify correct location of built-in framing, anchorage, and bracing.

3.02 INSTALLATION

A. Install partitions secure, rigid, plumb, and level in accordance with manufacturer's instructions.

B. Maintain 3/8 to 1/2 inch (9 to 13 mm) space between wall and panels and between wall and end pilasters.

C. Attach panel brackets securely to walls using anchor devices.

D. Attach panels and pilasters to brackets. Locate head rail joints at pilaster center lines.

3.03 TOLERANCES

A. Maximum Variation From True Position: 1/4 inch (6 mm).

B. Maximum Variation From Plumb: 1/8 inch (3 mm).

3.04 ADJUSTING

A. Adjust and align hardware to uniform clearance at vertical edge of doors, not exceeding 3/16 inch (5 mm).

B. Adjust hinges to position doors in partial opening position when unlatched. Return out swinging doors to closed position.

C. Adjust adjacent components for consistency of line or plane.

END OF SECTION 102113.13

SECTION 102600
WALL AND DOOR PROTECTION

PART 1 GENERAL

1.01 SECTION INCLUDES

A. Corner guards.

1.02 RELATED REQUIREMENTS

A. Section 055000 - Metal Fabrications: Corner guards fabricated from rolled metal sections or bent plate.

1.03 REFERENCE STANDARDS

A. ADA Standards - 2010 ADA Standards for Accessible Design; 2010.

B. ASTM D256 - Standard Test Methods for Determining the Izod Pendulum Impact Resistance of Plastics; 2023, with Editorial Revision.

C. ASTM F476 - Standard Test Methods for Security of Swinging Door Assemblies; 2023.

1.04 SUBMITTALS

A. See Section 013000 - Administrative Requirements for submittal procedures.

B. Product Data: Indicate physical dimensions, features, wall mounting brackets with mounted measurements, anchorage details, and rough-in measurements.

C. Shop Drawings: Include plans, elevation, sections, and attachment details. Show design and spacing of supports for protective corridor handrails, required to withstand structural loads.

D. Samples: Submit samples illustrating component design, configurations, joinery, color and finish.
   1. Submit two sections of corner guards, 12 inches (304.8 mm) long.

E. Maintenance Materials: Furnish the following for Owner's use in maintenance of project:
   1. See Section 016000 - Product Requirements, for additional provisions.
   2. Extra Stock Materials: One package(s) of minimum 96 inches (2438 mm) long unit of each kind of covers for corner guards.

1.05 DELIVERY, STORAGE, AND HANDLING

A. Deliver wall and door protection items in original, undamaged protective packaging. Label items to designate installation locations.

B. Do not deliver products to project site until areas for storage and installation are fully enclosed, and interior temperature and humidity are in compliance with manufacturer's recommendations for each type of item.

1.06 WARRANTY

A. See Section 017800 - Closeout Submittals for additional warranty requirements.

PART 2 PRODUCTS

2.01 MANUFACTURERS

A. Bumper Rails and Corner Guards:
   1. Any fabrication shop capatible to produce specified product.
   2. Substitutions: See Section 016000 - Product Requirements.

2.02 PERFORMANCE CRITERIA

A. Impact Strength: Unless otherwise noted, provide protection products and assemblies that have been successfully tested for compliance with applicable provisions of ASTM D256 and/or ASTM F476.

2.03 PRODUCT TYPES

A. Corner Guards - Surface Mounted:

1. Corner guards fabricated from rolled section or bent plate are specified in Section 055000.
2. Width of Wings: 2 inches (51 mm).
3. Corner: Square.
4. Color: clear powder coat.
5. Length: One piece.

2.04 FABRICATION

A. Fabricate components with tight joints, corners and seams.

2.05 SOURCE QUALITY CONTROL

A. See Section 014000 - Quality Requirements, for additional requirements.

PART 3 EXECUTION

3.01 EXAMINATION

A. Verify that rough openings, concealed blocking, and anchors are correctly sized and located.

3.02 INSTALLATION

A. Position corner guard 4 inches (102 mm) above finished floor to 96 inches high (2438.4 mm high).

3.03 TOLERANCES

A. Maximum Variation From Required Height: 1/4 inch (6 mm).

3.04 CLEANING

A. Clean wall and door protection items of excess adhesive, dust, dirt, and other contaminants.

END OF SECTION 102600

SECTION 102800
TOILET, BATH, AND LAUNDRY ACCESSORIES

PART 1 GENERAL

1.01 SECTION INCLUDES

A. Commercial toilet accessories.

B. Under-lavatory pipe supply covers.

C. Diaper changing stations.

D. Utility room accessories.

1.02 RELATED REQUIREMENTS

A. Section 06100 Rough Carpentry: Concealed supports for accessories, including in wall framing and plates.

B. Section 102113.13 - Metal Toilet Compartments.

C. Section 224000 - Plumbing Fixtures: Under-lavatory pipe and supply covers.

1.03 REFERENCE STANDARDS

A. ADA Standards - 2010 ADA Standards for Accessible Design; 2010.

B. ASTM A666 - Standard Specification for Annealed or Cold-Worked Austenitic Stainless Steel Sheet, Strip, Plate, and Flat Bar; 2023.

C. ASTM C1036 - Standard Specification for Flat Glass; 2021.

D. ASTM C1503 - Standard Specification for Silvered Flat Glass Mirror; 2024.

E. ASTM F2285 - Standard Consumer Safety Performance Specification for Diaper Changing Tables for Commercial Use; 2022.

1.04 ADMINISTRATIVE REQUIREMENTS

A. Coordinate the work with the placement of internal wall reinforcement, concealed ceiling supports, and reinforcement of toilet partitions to receive anchor attachments.

1.05 SUBMITTALS

A. See Section 013000 - Administrative Requirements, for submittal procedures.

PART 2 PRODUCTS

2.01 MANUFACTURERS

A. Commercial Toilet, Shower, and Bath Accessories:
   1. Owner provided items to be installed by contractor are all receptacle and dispensers. Verify with owner .
   2. American Specialties, Inc: www.americanspecialties.com/#sle.
      a. Grab Bars, Diaper Changing Station and Mirrors
      b. Substitutions: Section 016000 - Product Requirements.

B. Under-Lavatory Pipe Supply Covers:
   1. Specified in 224000 Plumbing Fixtures.
   2. Substitutions: Section 016000 - Product Requirements.

C. Electric Hand/Hair Dryers:
   1. Future item TBD by owner

D. Diaper Changing Stations:
   1. American Specialties, Inc; 9013-9: www.americanspecialties.com/#sle.

2.02 MATERIALS

A. Accessories - General: Shop assembled, free of dents and scratches and packaged complete with anchors and fittings, steel anchor plates, adapters, and anchor components for installation.

1. Fabricate units made of metal sheet of seamless sheets with flat surfaces.

B. Stainless Steel Sheet: ASTM A666, Type 304.

C. Mirror Glass: Annealed float glass, ASTM C1036 Type I, Class 1, Quality Q2, with silvering, protective and physical characteristics complying with ASTM C1503.

2.03 FINISHES

A. Stainless Steel: Satin finish, unless otherwise noted.

2.04 COMMERCIAL TOILET ACCESSORIES

A. All Dispensers and receptacles are furnished by owner, contractor installed

B. Mirrors: Stainless steel framed, 1/4 inch (6 mm) thick annealed float glass; ASTM C1036.
1. Annealed Float Glass: Silvering, protective and physical characteristics in compliance with ASTM C1503.
2. Size: 24 in x 36 in.
3. Frame: 0.05 inch (1.3 mm)angle shapes, with mitered and welded and ground corners, and tamperproof hanging system; satin finish.
4. Backing: Full-mirror sized, minimum 0.03 inch (0.8 mm) galvanized steel sheet and nonabsorptive filler material.
5. Products:
a. American Specialties, Inc; 0620 Series: www.americanspecialties.com/#sle.
b. Substitutions: Section 016000 - Product Requirements.

C. Grab Bars: Stainless steel, peened surface.
1. Standard Duty Grab Bars:
a. Push/Pull Point Load: 250 pound-force (1112 N), minimum.
b. Dimensions: 1-1/4 inch (32 mm) outside diameter, minimum 0.05 inch (1.3 mm) wall thickness, exposed flange mounting, 1-1/2 inch (38 mm) clearance between wall and inside of grab bar.
c. Length and Configuration: As indicated on drawings.
d. Products:
1) American Specialties, Inc; 3800 Series: www.americanspecialties.com/#sle.
2) Substitutions: Section 016000 - Product Requirements.

2.05 UNDER-LAVATORY PIPE AND SUPPLY COVERS

A. Specified in 224000 - Plumbing Fixtures.

2.06 DIAPER CHANGING STATIONS

A. Diaper Changing Station: Wall-mounted folding diaper changing station for use in commercial toilet facilities, meeting or exceeding ASTM F2285.
1. Material: Stainless steel.
2. Mounting: Surface.
3. Products:
a. American Specialties, Inc; 9013-9: www.americanspecialties.com/#sle.

2.07 UTILITY ROOM ACCESSORIES

A. Mop and Broom Holder: 0.05 inch (1.3 mm) thick stainless steel, Type 304, hat-shaped channel.
1. Holders: Three spring-loaded rubber cam holders.
2. Length: Manufacturer's standard length for number of holders.
3. Products:
a. American Specialties, Inc: www.americanspecialties.com/#sle.
b. Substitutions: 016000 - Product Requirements.

PART 3 EXECUTION

3.01 EXAMINATION

A. Verify existing conditions before starting work.

B. Verify exact location of accessories for installation.

C. Verify that field measurements are as indicated on drawings.

3.02 PREPARATION

A. Deliver inserts and rough-in frames to site for timely installation.

B. Provide templates and rough-in measurements as required.

3.03 INSTALLATION

A. Install accessories in accordance with manufacturers' instructions in locations indicated on drawings.

B. Install plumb and level, securely and rigidly anchored to substrate.

C. Mounting Heights: As required by accessibility regulations, unless otherwise indicated.

3.04 PROTECTION

A. Protect installed accessories from damage due to subsequent construction operations.

END OF SECTION 102800

This page intentionally left blank

SECTION 104400
FIRE PROTECTION SPECIALTIES

PART 1 GENERAL

1.01 SECTION INCLUDES

A. Fire extinguishers.

B. Fire extinguisher cabinets.

C. Accessories.

1.02 RELATED REQUIREMENTS

A. Section 061000 - Rough Carpentry: Wood blocking product and execution requirements.

1.03 REFERENCE STANDARDS

A. NFPA 10 - Standard for Portable Fire Extinguishers; 2022.

1.04 SUBMITTALS

A. See Section 013000 - Administrative Requirements, for submittal procedures.

B. Shop Drawings: Indicate locations of cabinets and cabinet physical dimensions.

1.05 FIELD CONDITIONS

A. Do not install extinguishers when ambient temperature may cause freezing of extinguisher ingredients.

PART 2 PRODUCTS

2.01 MANUFACTURERS

A. Fire Extinguishers:
1. Activar Construction Products Group, Inc. - JL Industries: www.activarcpg.com/#sle.
2. Ansul, a Tyco Business: www.ansul.com/#sle.
3. Kidde, a unit of United Technologies Corp: www.kidde.com/#sle.
4. Nystrom, Inc: www.nystrom.com/#sle.
5. Substitutions: See Section 016000 - Product Requirements.

B. Fire Extinguisher Cabinets and Accessories:
1. Activar Construction Products Group, Inc. - JL Industries; Ambassador Series: www.activarcpg.com/#sle.
2. Larsen's Manufacturing Co; Cameo Series: www.larsensmfg.com/#sle.
3. Nystrom, Inc; Alpine Series: www.nystrom.com/#sle.
4. Substitutions: See Section 016000 - Product Requirements.

2.02 FIRE EXTINGUISHERS

A. Fire Extinguishers - General: Comply with product requirements of NFPA 10 and applicable codes, whichever is more stringent.

B. Multipurpose Dry Chemical Type Fire Extinguishers: Carbon steel tank, with pressure gauge.
1. Class: A:B:C type.
2. Size: 10 pound (4.54 kg).
3. Temperature range: Minus 40 degrees F (Minus 40 degrees C) to ___ degrees F (___ degrees C).

2.03 FIRE EXTINGUISHER CABINETS

A. Cabinet Construction: Non-fire rated.
1. Formed primed steel sheet; 0.036 inch (0.9 mm) thick base metal.

B. Cabinet Configuration: Semi-recessed type.
1. Size to accommodate accessories.

C. Door: 0.036 inch (0.9 mm) metal thickness, reinforced for flatness and rigidity with nylon catch. Hinge doors for 180 degree opening with two butt hinges.

D. Door Glazing: Float glass, clear, 1/8 inch (3 mm) thick, and set in resilient channel glazing gasket.

E. Cabinet Mounting Hardware: Appropriate to cabinet, with pre-drilled holes for placement of anchors.

F. Fabrication: Weld, fill, and grind components smooth.

G. Finish of Cabinet Exterior Trim and Door: No.4 - Brushed stainless steel.

H. Finish of Cabinet Interior: White colored enamel.

2.04 ACCESSORIES

A. Extinguisher Brackets: Formed steel, galvanized and enamel finished. Welding shop portion of building only

B. Lettering: FIRE EXTINGUISHER decal, or vinyl self-adhering, pre-spaced black lettering in accordance with authorities having jurisdiction (AHJ).

PART 3 EXECUTION

3.01 EXAMINATION

A. Verify existing conditions before starting work.

B. Verify rough openings for cabinet are correctly sized and located.

3.02 INSTALLATION

A. Install in accordance with manufacturer's instructions.

B. Install cabinets plumb and level in wall openings, from finished floor to inside bottom of cabinet as shown..

C. Secure rigidly in place.

D. Place extinguishers in cabinets.

3.03 MAINTENANCE

A. See Section 017000 - Execution and Closeout Requirements, for additional requirements relating to maintenance service.

END OF SECTION 104400

SECTION 105617
WALL MOUNTED STANDARDS AND SHELVING

PART 1 GENERAL

1.01 SECTION INCLUDES

A. Steel shelf standards, brackets, and accessories.

B. Shelves.

C. See drawings for locations and configurations.

1.02 RELATED REQUIREMENTS

A. Section 061000 - Rough Carpentry: Wood blocking in walls for attachment of standards.

1.03 REFERENCE STANDARDS

A. NEMA LD 3 - High-Pressure Decorative Laminates; 2005.

1.04 SUBMITTALS

A. See Section 013000 - Administrative Requirements for submittal procedures.

1.05 QUALITY ASSURANCE

A. Manufacturer Qualifications: Company specializing in manufacturing products specified in this section, with not less than three years of documented experience.

1.06 DELIVERY, STORAGE, AND HANDLING

A. Store products under cover and elevated above grade.

B. Store products in manufacturer's unopened packaging until ready for installation.

PART 2 PRODUCTS

2.01 MANUFACTURERS

A. Steel Shelf Standards and Brackets:
   1. Knape & Vogt Manufacturing Company; 87™/187™ Series: www.knapeandvogt.com/#sle.
   2. Substitutions: See Section 016000 - Product Requirements.

2.02 COMPONENTS

A. Steel Shelf Standards, Brackets, and Accessories:
   1. Heavy-Duty Shelf Standards and Brackets: Double-slotted channel standards for brackets adjustable in 1 inch (25 mm) increments along entire length of standard, drilled and countersunk for screws.
      a. Load Capacity: Recommended by manufacturer for loading of 300 to 450 pounds (135 to 200 kg) per pair of standards.
      b. Lengths: As indicated on drawings.
      c. Finish: Powder-coated.
      d. Color: To be selected by Architect from manufacturer's full line.
      e. Brackets: Double tab type, locking into slots; size to suit shelves; same finish as standards.
      f. Bracket Quantity: Provide one bracket for each 12 inches (305 mm) of standard length.

B. Shelving:
   1. Laminate Faced Shelves: Particleboard or medium density fiberboard covered with high pressure decorative laminate on both sides.
      a. Edge Finish: Matching laminate, all four edges.
      b. Substrate Thickness: 3/4 inch (19 mm), nominal.
      c. Laminate: NEMA LD 3 Type HGL.

d. Laminate Color and Pattern: To be selected by Architect from manufacturer's full line.

C. Fasteners: Screws as recommended by manufacturer for intended application or as otherwise required by project conditions. Finish of exposed to view fasteners to match finish of standards and other components.

PART 3 EXECUTION

3.01 EXAMINATION

A. Do not begin installation until substrates have been properly prepared.

B. If substrate preparation is the responsibility of another installer, notify Architect of unsatisfactory preparation before proceeding.

3.02 PREPARATION

A. Clean surfaces thoroughly prior to installation.

B. Prepare surfaces using the methods recommended by the manufacturer for achieving the best result for the substrate under the project conditions.

3.03 INSTALLATION

A. Install in accordance with manufacturer's instructions.

B. Mount standards or brackets to solid backing capable of supporting intended loads.

C. Install brackets, shelving, and accessories.

3.04 PROTECTION

A. Protect installed products until completion of project.

B. Touch-up, repair or replace damaged products before Substantial Completion.

END OF SECTION 105617

SECTION 105723
CLOSET AND UTILITY SHELVING

PART 1 GENERAL

4.01 SECTION INCLUDES

A. Laminated wood storage systems.

B. Accessories.

4.02 RELATED REQUIREMENTS

A. Section 061000 - Rough Carpentry: Blocking in walls for attachment of shelving or storage system.

4.03 SUBMITTALS

A. See Section 013000 - Administrative Requirements, for submittal procedures.

4.04 QUALITY ASSURANCE

A. Manufacturer Qualifications: Company specializing in manufacturing products specified in this section, with not less than three years of documented experience.

4.05 DELIVERY, STORAGE, AND HANDLING

A. Store products in manufacturer's unopened packaging until ready for installation.

B. Store products under cover and elevated above grade.

C. Store flat to prevent warpage and bending.

4.06 FIELD CONDITIONS

A. Maintain temperature, humidity, and ventilation within limits recommended by manufacturer. Do not install products under environmental conditions outside manufacturer's limits.

PART 2 PRODUCTS

5.01 MANUFACTURERS

A. Laminated Wood Storage Systems:
   1. Substitutions: See Section 016000 - Product Requirements.

5.02 LAMINATED WOOD STORAGE SYSTEMS

A. Applications:
   1. Closet Storage System: Wall bracket-supported thermally fused laminate clad shelving with attached components and accessories, as indicated on drawings.
      a. Storage System Nominal Dimensions: Unless otherwise indicated, provide shelves of widths and heights indicated on drawings.
      b. System Depth: 14 inches (356 mm), unless otherwise indicated.

B. Shelves: Manufacturer's standard adjustable shelves and shelf supports.
   1. Shelf Width: 18 inches (457 mm), unless otherwise indicated.

PART 3 EXECUTION

6.01 EXAMINATION

A. Inspect areas to receive shelving or storage system, to verify that spaces are properly prepared to receive shelf units, and are of dimensions indicated on shop drawings.

B. Verify appropriate fastening hardware.

C. Do not begin installation until substrates have been properly prepared.

D. If substrate preparation is the responsibility of another installer, notify Architect of unsatisfactory preparation before proceeding.

6.02 PREPARATION

A. Clean surfaces thoroughly prior to installation.

B. Prepare surfaces using the methods recommended by the manufacturer for achieving the best result for the substrate under the project conditions.

6.03 INSTALLATION

A. Install laminated wood storage system in accordance with drawings. Position units level, plumb, and at proper location relative to adjoining units and related work.

6.04 CLEANING

A. Clean soiled surfaces after installation.

6.05 PROTECTION

A. Protect installed work from damage.

B. Touch-up, repair, or replace damaged products before Substantial Completion in a manner that eliminates evidence of replacement.

END OF SECTION 105723

SECTION 115213
PROJECTION SCREENS

PART 1 GENERAL

7.01 SECTION INCLUDES

A. Front projection screen assemblies.

7.02 RELATED REQUIREMENTS

A. Section 260583 - Wiring Connections: Electrical supply, conduit, and wiring for electric motor operated projection screens.

7.03 DELIVERY, STORAGE, AND HANDLING

A. Deliver projection screens to project site in manufacturer's original unopened packaging, and inspect for damage and proper size before accepting delivery.

B. Store in a protected, clean, dry area with temperature maintained above 50 degrees F (10 degrees C), and stack in accordance with manufacturer's recommendations.

C. Acclimate screens to building temperatures for 24 hours prior to installation, in accordance with manufacturer's recommendations.

7.04 WARRANTY

A. See Section 017800 - Closeout Submittals, for additional warranty requirements.

B. Provide ____ year manufacturer warranty for projection screen assembly.

PART 2 PRODUCTS

8.01 FRONT PROJECTION SCREENS

A. Manufacturers:
   1. BasisDa-Lite Screen Company; Tension Advantage W/HD Progressive Contracts: www.da-lite.com/#sle.

B. Front Projection Screens: Factory assembled unless otherwise indicated.

C. Matte Light Diffusing Fabric: Light diffusing screen fabric; washable, flame retardant and mildew resistant.
   1. Material: Matte white vinyl on fiberglass backing, with nominal gain of 1.0 over viewing angle not less than 70 degrees from axis, horizontally and vertically.
   2. Seams: No seams permitted in fabric up to 96 inch (2438 mm) high by 72 inch (1829 mm) wide.

D. Masking Borders: Black, on four sides.

E. Concealed-in-Ceiling Screen Cases: Steel, with integral roller brackets.
   1. Door Slat: Self trim; self-closing and -opening.
   2. Case Finish: Baked enamel.
   3. Case Color: White.
   4. End Caps: Steel; finished to match case.
   5. Electrically-Operated Screens: 1-1/2 inch (38 mm) aluminum door roller.

F. Electrically-Operated Screens:
   1. Roller: Steel, 2 inch (51 mm) in diameter, with locking device.
   2. Vertical Tensioning: Screen fabric weighted at bottom with steel bar and plastic end caps.
   3. Horizontal Tensioning: Tab-guided cable system.

G. Provide mounting hardware, brackets, supports, fasteners, and other mounting accessories required for a complete installation, in accordance with manufacturer's recommendations for specified substrates and mountings.

8.02 ELECTRICAL COMPONENTS

A. Electrical Components: Listed and classified by UL as suitable for the purpose specified and indicated.

B. Motors: Direct drive, 110 V, 60 Hz.
   1. Screen Motor: Mounted inside roller; three wire with ground; quick reverse type and lifetime lubricated; equipped with thermal overload cut-off, internal junction box, electric brake, and pre-set accessible limit switches.
      a. Electrical Characteristics: 1.2 amps.
      b. Motor mounted on sound absorber.
   2. Door and Adjustable Masking Motor: Mounted inside roller; three wire with ground; quick reverse type; equipped with thermal overload cut-off.
      a. Electrical Characteristics: 1.2 amps.

C. Controls: Three (3) position control switch with plate.

PART 3 EXECUTION

9.01 EXAMINATION

A. Verify that substrate is finished and ready to accept screen installation.

B. If substrate preparation is the responsibility of another installer, notify Architect of unsatisfactory preparation before proceeding.

C. Verify that openings for recessed screens are correctly sized.

D. Verify type and location of electrical connections.

E. Do not install projection screens until climate control systems are in place and interior painting and other finishes are completed.

9.02 PREPARATION

A. Coordinate screen installation with installation of projection systems.

B. Coordinate installation with adjacent construction and fixtures, including ceilings, walls, lighting, fire suppression, and registers and grilles.

9.03 INSTALLATION

A. Install in accordance with manufacturer's instructions, using manufacturer's recommended hardware for relevant substrates.

B. Do not field cut screens.

C. Install screens in mountings as specified and as indicated on drawings.

D. Install plumb and level.

E. Install electrically operated screens ready for connection to power and control systems by others.

F. Adjust projection screens and related hardware in accordance with manufacturer's instructions for proper placement and operation.

G. Test electrical screens for proper working condition. Adjust as needed.

9.04 PROTECTION

A. Protect installed products until completion of project.

B. Touch up, repair, or replace damaged products before Date of Substantial Completion.

END OF SECTION 115213

SECTION 115314
FUME EXTRACTORS

PART 1 GENERAL

1.01 SECTION INCLUDES

A. Fume extractors.

1.02 RELATED REQUIREMENTS

A. Section 012100: Allowances.

PART 2 PRODUCTS

END OF SECTION 115314

This page intentionally left blank

SECTION 115700
VOCATIONAL SHOP EQUIPMENT

PART 1 GENERAL

1.01 RELATED DOCUMENTS

A. Drawings and general provisions of the Contract, including General and Supplementary Conditions and Division 01 Specification Sections, apply to this Section.

1.02 SUMMARY

A. Section includes:
   1. Steel panel welding booths configured as enclosures.
   2. Arc Flash Protection Strip Curtain

B. Related Requirements:
   1. Section 055000 "Metal Fabrications" for supports that attach floor-and-ceiling-anchored compartments to overhead structural system.
   2. Section 061053 "Miscellaneous Rough Carpentry" for blocking and overhead support of floor-and-ceiling-anchored compartments.

1.03 ACTION SUBMITTALS

A. Product Data: For each type of product.
   1. Include construction details, material descriptions, dimensions of individual components and profiles, and finishes for welding booths.

B. Sustainable Design Submittals:
   1. Meet the requirements as outlined in the DFCM High Performance Building Standards.

C. Shop Drawings: For welding booth compartments.
   1. Include plans, elevations, sections, details, and attachment details.
   2. Show locations of cutouts for compartment-mounted accessories.
   3. Show overhead support or bracing locations.

D. Samples for Initial Selection: For each type of welding booth compartment material indicated.
   1. Include Samples of hardware and accessories involving material and color selection.

E. Samples for Verification: For the following products, in manufacturer's standard sizes unless otherwise indicated:
   1. Each type of material, color, and finish required for welding booth compartments, prepared on 6-inch- (152-mm-) square Samples of same thickness and material indicated for Work.
   2. Each type of hardware and accessory.

F. Product Schedule: For welding booth compartments, prepared by or under the supervision of supplier, detailing location and selected colors for welding booth compartment material.

1.04 INFORMATIONAL SUBMITTALS

A. Product Certificates: For each type of welding booth compartment.

1.05 CLOSEOUT SUBMITTALS

A. Maintenance Data: For welding compartments and E-track to include in maintenance manuals.

1.06 MAINTENANCE MATERIAL SUBMITTALS

A. Furnish extra materials that match products installed and that are packaged with protective covering for storage and identified with labels describing contents.
   1. Fasteners: Ten fasteners of each size and type.

1.07 PROJECT CONDITIONS

A. Field Measurements: Verify actual locations of fixtures, walls, columns, ceilings, and other construction contiguous with welding compartments and E-track by field measurements before fabrication.

PART 2 PRODUCTS

2.01 PERFORMANCE REQUIREMENTS

A. Meet the requirements as outlined in the DFCM High Performance Building Standards.

B. Regulatory Requirements: Comply with applicable provisions in the U.S. Architectural & Transportation Barriers Compliance Board's ADA-ABA Accessibility Guidelines for Buildings and Facilities and ICC A117.1 for welding booths designated as accessible.

2.02 WELDING BOOTH COMPARTMENTS

A. Manufacturers: Subject to compliance with requirements, available manufacturers offering products that may be incorporated into the Work include, but are not limited to the following:
   1. Green Manufacturing, Inc.
   2. Avanti Environmental
   3. Lincoln Electric.
   4. Diversitech.
   5. Akon Curtain and Divider
   6. Steel Guard Safety Products
   7. Steiner.

B. Welding Booth-Enclosure Style: Floor and overhead braced anchored.

C. Panel, and corner post Construction: The panels shall be constructed of fire-resistant material. The panels shall be constructed such that they have a minimum 18” space below the bottom of each panel to allow for airflow. The corners secured by welding or clips and exposed welds ground smooth. Exposed surfaces shall be free of pitting, seam marks, roller marks, stains, discolorations, telegraphing of core material, or other imperfections.
   1. Tapping Reinforcement: Provide concealed reinforcement for tapping (threading) at locations where machine screws are used for attaching items to units.

D. Facing Sheets: Mild steel sheet with nominal base-metal (uncoated) thicknesses as follows:
   1. Panels: Manufacturer's standard thickness, but not less than minimum 16 gauge sheet steel 0.065 inch (0.79 mm).

E. Corner Posts, Braced at Both Ends: Manufacturer's standard 1 1/2” x 1 1/2” x 1/8” (wall thickness) steel tubing (or equivalent strength support).

F. Corner Post Shoes: Manufacturer's standard thickness, finished to match panel and corner posts.

G. Arc Flash Protection Strip Curtain: These curtains shall be constructed of approved material such that they block harmful UV rays emanating from the welding arc. Manufacturer's standard thickness and width but not less than .080” (2 mm) thick and 8” (203 mm) wide. Sturdy universal galvanized mount attaches to booth fronts and door openings.

H. Brackets (Fittings):
   1. Stirrup Type: Ear or U-brackets : Manufacturer's standard design.

I. Steel Sheet Finish: Immediately after cleaning and pretreating, apply manufacturer's standard baked-on finish, including thermosetting, electrostatically applied, and powder coatings. Comply with coating manufacturer's written instructions for applying and baking.
   1. Color: As selected by Architect from manufacturer's full range.
      a. Allow for application of one color in each room.

J. Arc Flash Protection Strip Curtain: High grade clear, PVC strips – cut & punched.
      1) Color: As selected by Architect from manufacturer's full range.

2.03 HARDWARE AND ACCESSORIES

A. Hardware and Accessories: Manufacturer's heavy-duty operating hardware and accessories.

B. Steel Sheet: Commercial steel sheet for exposed applications; mill phosphatized and selected for smoothness.

C. Anchorages and Fasteners: Manufacturer's standard exposed fasteners of zinc coated, finished to match the items they are securing.. For concealed anchors, use stainless-steel, hot-dip galvanized-steel, or other rust-resistant, protective-coated steel anchors compatible with related materials.

2.04 MATERIALS

A. The panels shall be constructed of fire-resistant material. The panels shall be a minimum 16 gauge sheet steel.

B. Each panel shall be coated with a rust inhibiting flat powder coating. The ‘inside’ portion of the panels shall be painted black (or equivalent low reflective color) to reduce the propagation of arc flash to adjacent welding personnel.

C. Each Arc Flash Protection Strip Curtain shall be flame retardant, high grade clear, PVC Strips that blocks most UV radiation and protects workers in adjacent areas from welding flash.

2.05 FABRICATION

A. Fabrication, General: Welding booths shall adhere to the AWS (American Welding society) “Guide for the Training of Welding Personnel” (AWS EG2.0:2006). The booths allow for flexibility and modularity. They allow for flexibility by permitting the instructor to modify the booth configuration in conjunction with possible curriculum changes. Expandability is accomplished by adding more walls to the booth system. All four sides shall provide complete protection of the welding personnel and others in the area from harmful UV rays and hot sparks. Welding booth compartment components to sizes indicated. Coordinate requirements and provide cutouts for through-partition welding booth accessories.

B. Floor-and-Ceiling-Anchored Units: Provide manufacturer's standard corrosion-resistant anchoring assemblies with leveling adjustment nuts at tops and bottoms of pilasters.

C. Door Opening Size and Booth Openings: Unless otherwise indicated, provide 60-inch- (1524-mm-) wide for a standard welding booth and a 72-inch- (1829-mm-) wide for an ADA compliant welding booth. The actual clear opening is reduced by the width of the welding machine. Door for grinding room opening shall be a hollow metal door with standard traffic door.

D. Each booth is to have a shelf above the welding machine afixed from above with appropriate secondary support material compatible with the welding booth material. The interior secondary sides of the booth shelf are to receive the same arc flash protection as the main entry to the booth.

PART 3 EXECUTION

3.01 EXAMINATION

A. Examine areas and conditions, with Installer present, for compliance with requirements for fastening, support, alignment, operating clearances, and other conditions affecting performance of the Work.
   1. Confirm location and adequacy of blocking and supports required for installation.

B. Proceed with installation only after unsatisfactory conditions have been corrected.

3.02 INSTALLATION

A. General: Comply with manufacturer's written installation instructions. Install units rigid, straight, level, and plumb. Secure units in position with manufacturer's recommended anchoring devices.

B. Each booth shall be constructed in such a manner that when the panels are bolted to each other, a wall secured, three sided booth shall be the result. Each booth shall be made to be anchored to the floor and to the wall. With the proper anchors the booth system shall have the ability to be approved for a seismic design category IV.
   1. Maximum Clearances:
      a. Corner posts and Panels: 0 clearance.
      b. Panels and Walls: 0 clearance.

c. Locate bracket fasteners so holes for wall anchors occur in masonry.
d. Align brackets at corner posts with brackets at walls.

C. Floor-and-Overhead-Braced-Anchored Units: Secure corner posts to supporting construction and level, plumb, and tighten. Hang arc flash protection curtain level and aligned with panels.

3.03 ADJUSTING

A. Hardware Adjustment: Adjust and lubricate hardware according to hardware manufacturer's written instructions for proper operation. Set hinges on in-swinging doors to hold doors open approximately 30 degrees from closed position when unlatched. Set hinges on out-swinging doors to return doors to fully closed position.

END OF SECTION 115700

SECTION 122413
ROLLER WINDOW SHADES

PART 1 GENERAL

1.01 RELATED DOCUMENTS

A. Drawings and general provisions of the Contract, including General and Supplementary Conditions and Division 01 Specification Sections, apply to this Section.

1.02 SUMMARY

A. Section Includes:
   1. Manually operated roller shades with double rollers.

B. Related Requirements:
   1. Section 061053 "Miscellaneous Rough Carpentry" for wood blocking and grounds for mounting roller shades and accessories.
   2. Section 079200 "Joint Sealants" for sealing the perimeters of installation accessories for light-blocking shades with a sealant.

1.03 ACTION SUBMITTALS

A. Product Data: For each type of product.
   1. Include construction details, material descriptions, dimensions of individual components and profiles, features, finishes, and operating instructions for roller shades.

B. Shop Drawings: Show fabrication and installation details for roller shades, including shadeband materials, their orientation to rollers, and their seam and batten locations.

C. Samples: For each exposed product and for each color and texture specified, 10 inches (254 mm) long.

D. Samples for Initial Selection: For each type and color of shadeband material.
   1. Include Samples of accessories involving color selection.

E. Samples for Verification: For each type of roller shade.
   1. Shadeband Material: Not less than 10 inches (254 mm) square. Mark interior face of material if applicable.
   2. Roller Shade: Full-size operating unit, not less than 16 inches (406.4 mm) wide by 36 inches (914.4 mm) long for each type of roller shade indicated.
   3. Installation Accessories: Full-size unit, not less than 10 inches (254 mm) long.

F. Product Schedule: For roller shades. Accessory Schedule.

1.04 INFORMATIONAL SUBMITTALS

A. Qualification Data: For Installer.

B. Product Certificates: For each type of shadeband material.

C. Product Test Reports: For each type of shadeband material, for tests performed by manufacturer and witnessed by a qualified testing agency.

1.05 CLOSEOUT SUBMITTALS

A. Operation and Maintenance Data: For roller shades to include in maintenance manuals.

1.06 MAINTENANCE MATERIAL SUBMITTALS

A. Furnish extra materials that match products installed and that are packaged with protective covering for storage and identified with labels describing contents.
   1. Roller Shades: Full-size units equal to 5 percent of quantity installed for each size, color, and shadeband material indicated, but no fewer than two units.

1.07 QUALITY ASSURANCE

A. Installer Qualifications: Fabricator of products.

B. Mockups: Build mockups to verify selections made under Sample submittals, to demonstrate aesthetic effects, and to set quality standards for fabrication and installation.
   1. Approval of mockups does not constitute approval of deviations from the Contract Documents contained in mockups unless Architect specifically approves such deviations in writing.
   2. Subject to compliance with requirements, approved mockups may become part of the completed Work if undisturbed at time of Substantial Completion.

1.08 DELIVERY, STORAGE, AND HANDLING

A. Deliver roller shades in factory packages, marked with manufacturer, product name, and location of installation using same designations indicated on Drawings.

1.09 FIELD CONDITIONS

A. Environmental Limitations: Do not install roller shades until construction and finish work in spaces, including painting, is complete and dry and ambient temperature and humidity conditions are maintained at the levels indicated for Project when occupied for its intended use.

B. Field Measurements: Where roller shades are indicated to fit to other construction, verify dimensions of other construction by field measurements before fabrication and indicate measurements on Shop Drawings. Allow clearances for operating hardware of operable glazed units through entire operating range. Notify Architect of installation conditions that vary from Drawings. Coordinate fabrication schedule with construction progress to avoid delaying the Work.

PART 2 PRODUCTS

2.01 MANUFACTURERS

A. Source Limitations: Obtain roller shades from single source from single manufacturer.

2.02 MANUALLY OPERATED SHADES WITH DOUBLE ROLLERS

A. Manufacturers: Subject to compliance with requirements, available manufacturers offering products that may be incorporated into the Work include, but are not limited to the following:
   1. Draper Inc.
   2. Hunter Douglas Contract.
   3. MechoShade Systems, Inc.

B. Chain-and-Clutch Operating Mechanisms: With continuous-loop bead chain and clutch that stops shade movement when bead chain is released; permanently adjusted and lubricated.
   1. Bead Chains: Nickel-plated metal.
      a. Loop Length: Full length of roller shade.
      b. Limit Stops: Provide upper and lower ball stops.
      c. Chain-Retainer Type: Chain tensioner, jamb mounted.
   2. Spring Lift-Assist Mechanisms: Manufacturer's standard for balancing roller shade weight and for lifting heavy roller shades.
      a. Provide for shadebands that weigh more than 10 lb (4.5 kg) or for shades as recommended by manufacturer, whichever criterion is more stringent.

C. Rollers: Corrosion-resistant steel or extruded-aluminum tubes of diameters and wall thicknesses required to accommodate operating mechanisms and weights and widths of shadebands indicated without deflection. Provide with permanently lubricated drive-end assemblies and idle-end assemblies designed to facilitate removal of shadebands for service.
   1. Double-Roller Mounting Configuration: Offset, outside roller over and inside roller under.
   2. Inside Roller:
      a. Drive-End Location: Right side of interior face of shade.
      b. Direction of Shadeband Roll: Regular, from back (exterior face) of roller.
   3. Outside Roller:
      a. Drive-End Location: Right side of interior face of shade.
      b. Direction of Shadeband Roll: Regular, from back (exterior face) of roller.

4. Shadeband-to-Roller Attachment: Manufacturer's standard method.

D. Mounting Hardware: Brackets or endcaps, corrosion resistant and compatible with roller mounting configuration, roller assemblies, operating mechanisms, installation accessories, and installation locations and conditions indicated.

E. Roller-Coupling Assemblies: Coordinated with operating mechanism and designed to join up to three inline rollers into a multiband shade that is operated by one roller drive-end assembly.

F. Inside Shadebands:
1. Shadeband Material: Light-filtering fabric.
2. Shadeband Bottom (Hem) Bar: Steel or extruded aluminum.
a. Type: Enclosed in sealed pocket of shadeband material.
b. Color and Finish: As selected by Architect from manufacturer's full range.

G. Outside Shadebands:
1. Shadeband Material: Light-blocking fabric.
2. Shadeband Bottom (Hem) Bar: Steel or extruded aluminum.
a. Type: Enclosed in sealed pocket of shadeband material.
b. Color and Finish: As selected by Architect from manufacturer's full range.

H. Installation Accessories:
1. Exposed Headbox: Rectangular, extruded-aluminum enclosure including front fascia, top and back covers, endcaps, and removable bottom closure.
a. Height: Manufacturer's standard height required to enclose roller and shadeband assembly when shade is fully open, but not less than 4 inches (101.6 mm).
2. Endcap Covers: To cover exposed endcaps.
3. Side Channels: With light seals and designed to eliminate light gaps at sides of shades as shades are drawn down. Provide side channels with shadeband guides or other means of aligning shadebands with channels at tops.
4. Bottom (Sill) Channel or Angle: With light seals and designed to eliminate light gaps at bottoms of shades when shades are closed.
5. Installation Accessories Color and Finish: As selected from manufacturer's full range.

2.03 SHADEBAND MATERIALS

A. Shadeband Material Flame-Resistance Rating: Comply with NFPA 701. Testing by a qualified testing agency. Identify products with appropriate markings of applicable testing agency.

B. Light-Filtering Fabric: Woven fabric, stain and fade resistant.
1. Source: Roller shade manufacturer.
2. Type: PVC-coated polyester.
3. Weave: Basketweave.
4. Roll Width: 72 inches (1828.8 mm).
5. Openness Factor: 3 percent.
6. Color: As selected by Architect from manufacturer's full range.

C. Light-Blocking Fabric: Opaque fabric, stain and fade resistant.
1. Source: Roller shade manufacturer.
2. Type: PVC-coated polyester
3. Roll Width: 72 inches (1828.8 mm).
4. Features: Washable.
5. Color: As selected by Architect from manufacturer's full range.

2.04 ROLLER SHADE FABRICATION

A. Product Safety Standard: Fabricate roller shades to comply with WCMA A 100.1, including requirements for flexible, chain-loop devices; lead content of components; and warning labels.

B. Unit Sizes: Fabricate units in sizes to fill window and other openings as follows, measured at 74 deg F (23 deg C):

1. Between (Inside) Jamb Installation: Width equal to jamb-to-jamb dimension of opening in which shade is installed less 1/4 inch (6.35 mm) per side or 1/2-inch (13-mm) total, plus or minus 1/8 inch (3.18 mm). Length equal to head-to-sill or -floor dimension of opening in which shade is installed less 1/4 inch (6.35 mm), plus or minus 1/8 inch (3.18 mm).
2. Outside of Jamb Installation: Width and length as indicated, with terminations between shades of end-to-end installations at centerlines of mullion or other defined vertical separations between openings.

C. Shadeband Fabrication: Fabricate shadebands without battens or seams to extent possible, except as follows:
1. Vertical Shades: Where width-to-length ratio of shadeband is equal to or greater than 1:4, provide battens and seams at uniform spacings along shadeband length to ensure shadeband tracking and alignment through its full range of movement without distortion of the material.
2. Railroaded Materials: Railroad material where material roll width is less than the required width of shadeband and where indicated. Provide battens and seams as required by railroaded material to produce shadebands with full roll-width panel(s) plus, if required, one partial roll-width panel located at top of shadeband.

PART 3 EXECUTION

3.01 EXAMINATION

A. Examine substrates, areas, and conditions, with Installer present, for compliance with requirements for installation tolerances, operational clearances,and other conditions affecting performance of the Work.

B. Proceed with installation only after unsatisfactory conditions have been corrected.

3.02 ROLLER SHADE INSTALLATION

A. Install roller shades level, plumb, and aligned with adjacent units according to manufacturer's written instructions.
1. Opaque Shadebands: Located so shadeband is not closer than 2 inches (50.8 mm) to interior face of glass. Allow clearances for window operation hardware.

B. Roller Shade Locations: As indicated on Drawings.

3.03 ADJUSTING

A. Adjust and balance roller shades to operate smoothly, easily, safely, and free from binding or malfunction throughout entire operational range.

3.04 CLEANING AND PROTECTION

A. Clean roller shade surfaces, after installation, according to manufacturer's written instructions.

B. Provide final protection and maintain conditions, in a manner acceptable to manufacturer and Installer, that ensure that roller shades are without damage or deterioration at time of Substantial Completion.

C. Replace damaged roller shades that cannot be repaired, in a manner approved by Architect, before time of Substantial Completion.

3.05 DEMONSTRATION

A. Engage a factory-authorized service representative to train Owner's maintenance personnel to adjust, operate, and maintain motor-operated roller shades.

END OF SECTION 122413

SECTION 124813
ENTRANCE FLOOR MATS AND FRAMES

PART 1 GENERAL

1.01 SECTION INCLUDES

A. Carpet mat.

1.02 SUBMITTALS

A. See Section 013000 - Administrative Requirements, for submittal procedures.

B. Product Data: Provide data indicating properties of walk-off surface, component dimensions and recessed frame characteristics.

PART 2 PRODUCTS

2.01 MANUFACTURERS

A. Floor Mats:
   1. Basis of design ShawContrace BonJour IITile www.Shawin.com
   2. Substitutions: See Section 016000 - Product Requirements.

2.02 MATS

A. Carpet Mat: Pet Polyester pile permanently bonded to Polypropylene backing; secondary backing Ecroworx Tile 24 inch (61 mm) wide by 24 inches (61 mm) long with 1-inch (25 mm)
   1. Colors: As indicated on drawings.
   2. Adheasive: Use type recomendaed by manufacture

PART 3 EXECUTION

3.01 EXAMINATION

A. Verify that floor opening for mats are ready to receive work.

3.02 PREPARATION

A. Vacuum clean floor recess.

3.03 INSTALLATION

A. Install walk-off surface in floor recess flush with finish floor after cleaning of finish flooring.

END OF SECTION 124813

This page intentionally left blank

SECTION 210500
COMMON WORK RESULTS FOR FIRE SUPPRESSION

PART 2 PRODUCTS

1.01 GENERAL REQUIREMENTS

A. Welding Materials and Procedures: Comply with ASME BPVC-IX.

B. Provide system pipes, fittings, sleeves, escutcheons, seals, and other related accessories.

END OF SECTION 210500

This page intentionally left blank

SECTION 210523
GENERAL-DUTY VALVES FOR WATER-BASED FIRE-SUPPRESSION PIPING

PART 2 PRODUCTS

1.01 GENERAL REQUIREMENTS

A. Comply with NFPA 13 and NFPA 13R for valves.

B. Valve Pressure Ratings: Not less than minimum pressure rating indicated or higher as required.

C. Valve Sizes: Same as upstream piping unless otherwise indicated.

END OF SECTION 210523

This page intentionally left blank

SECTION 210800
FIRE SUPPRESSION SYSTEMS COMMISSIONING

PART 1-GENERAL

1.01 RELATED WORK

A. All other sections in Division 22, 23 and 26

1.02 DESCRIPTION

A. The purpose of the commissioning process is to provide the Owner/operator of the facility with an elevated level of assurance that the mechanical and associated electrical Systems have been installed in the prescribed manner and operate within the performance guidelines set in the design intent. The Commissioning Authority shall provide the Owner with an unbiased, objective view of the systems installation, operation, and performance. This process is not to take away or reduce the responsibility of the design professionals or installing contractors to provide a finished product. Commissioning is intended to enhance the quality of system start-up and aid in the orderly transfer of systems to beneficial use by the owner. The Commissioning Authority will be a member of the construction team, cooperating and coordinating all commissioning activities with the design professionals, construction manager, contractors, subcontractors, manufacturers, and equipment suppliers.
   1. SCOPE
   2. The fire sprinkler systems commissioning shall include a demonstration by the Contractor of each equipment control sequence. The commissioning process shall demonstrate that each control sequence (including alarms and lead/lag equipment operations) and the associated test and balance data all correspond with the contract documents and with the final test and balance report. The finalized temperature control software with graphic displays shall be installed and operational (at all required locations) and the final test and balance report shall be provided for review and acceptance by the Owner and the Engineer a minimum of 10 days prior to requesting date(s) for the FIRE SPRINKLER systems commissioning. Additionally, the temperature control contractor and the test and
      a. balance contractor (along with any other necessary parties) shall complete a 'dry-run commissioning' and shall certify in writing that all equipment is operating in accordance with the finalized written control sequences prior to requesting date(s) for the actual official on-site FIRE SPRINKLER systems commissioning session(s).

B. The fire sprinkler systems commissioning shall demonstrate that the quantities read and displayed by the control system are in agreement with actual' tested quantities (e.g.. variable air volume box cfm readings. minimum outside air cfm readings. air temperatures. water temperatures. duct static pressures, building static pressures, etc.). The fire sprinkler systems commissioning shall also demonstrate that all quantities listed in the final test and balance report (cfm readings. gpm readings. temperature differences, pressure drops. etc.) are/were correctly reported.

C. The Contractor shall furnish a set of two-way radios which will be utilized to expedite the commissioning process (typically a minimum of 3 fully charged radios will be necessary and required for

D. Fire sprinkler systems commissioning shall be conducted with representatives from the following entities (the required participants shall be confirmed with the commissioning agent prior to scheduling the commissioning)
   1. General Contractor (with a complete set of asbuilt plans and specifications).
   2. Mechanical Contractor (with a complete set of mechanical equipment operating and maintenance manuals that include a full set of submittals).
   3. Mechanical Engineer and or his designated representative.

E. The aforementioned representatives shall be present during all portions of the testing (and re-testing as required) and shall be equipped to promptly remedy any deficiencies discovered during the commissioning process.

F. The Contractor shall include adequate time periods for both the 'dry-run commissioning' and the actual official on-site commissioning in the project schedule. The necessary time periods shall be carefully reviewed with all of the appropriate subcontractors to ensure that the subcontractors are in agreement with the time allotted for each scheduled task.

G. Completion and acceptance of the fire sprinkler systems commissioning shall be a condition of Substantial Completion. The building shall be considered 'not ready to utilize for its intended use' until such time that the fire sprinkler systems commissioning is successfully completed.

H. The responsibilities of the General/Managing Contractor shall also include.
   1. Coordinate and manage the Contractors commissioning activities.
   2. Coordinate directly with each subcontractor and vendor with respect to their respective responsibilities and contractual obligations for commissioning.
   3. Attend periodic on-site commissioning meetings as required by the Commissioning Authority.
   4. Integrate commissioning schedule into the master construction activity schedule.
   5. Update schedule at specified intervals.
   6. Conduct installation verification inspections.
   7. Review controls documentation and interface with other systems.
   8. Obtain then review operation & maintenance information and as-built drawings provided by the various subcontractors and vendors.
   9. Note any inconsistencies or deficiencies in system operations. Enforce system compliance or recommend to the owner’s Representative modifications to system design that will correct or enhance system performance.
   10. Coordinate Commissioning Authority in testing & witnessing after verifying that pretests have been satisfactorily conducted and final tests are ready to be performed.
   11. Be present during training sessions to direct video recording, present training and direct the presentations of others.
   12. Be present during start-up activities to direct and witness execution of start-up.
   13. Monitor performance of testing, adjusting and balancing activities to ensure acceptable results, and use of approved methods and instrumentation.
   14. Ensure that necessary test instrumentation is available during verification and functional performance testing, and that instruments meet quality and calibration requirements and are in good working order.
   15. Be present during verification and functional performance testing and retesting to direct and witness execution of tests.
   16. If a commissioning test fails, determine the cause of failure, direct timely correction of deficiency and then retest. Reimburse the Owner, Design Team & Commissioning Authority for billed costs (including travel expenses) for the extraordinary participation of the Owners Representative, Architect, Commissioning Authority, or owner’s staff (Extraordinary Participation shall be defined as any test that has failed more than TWO (2) times and requires Three (3) or more tests)
   17. Track commissioning deficiencies until correction and retesting is successfully completed.

I. The functions and responsibility of the Commissioning Authority shall include:
   1. Responsibility: The primary point of responsibility is to inform the Contractor and the Owner on the status, integration, and performance of systems within the facility.
   2. Information: The Commissioning Authority shall function as a catalyst and initiator to disseminate information and assist the design and construction teams in the completion of the construction process. This shall include system completeness, performance, and adequacy to meet the intended performance standards of each system. Services include
      a. construction observation, spot testing, verification, and functional performance testing, and providing performance and operating information to the responsible parties, e.g., contractors, design professionals, and the Owner.
         1) Quality Assurance: Assist the responsible parties to maintain a high-quality level of installation and system performance.

(a) Observation of tests: Commissioning Authority shall observe and coordinate testing as required to ensure system performance meets the design intent.
(b) Documentation of tests: Commissioning Authority shall document the results of the performance testing directly and/or ensure that all testing is documented by the
(c) appropriate technicians. The Commissioning Authority shall provide standard forms to be used by all parties for consistency of approach and type of information to be recorded.

b. Resolution of disputes: The Commissioning Authority is to remain an independent
(a) party present on the project with specific knowledge of the subject. Should disputes arise, the Commissioning Authority shall perform research to determine the scope. and extent of the problem and educate the involved parties as to the nature and extent of the problem.
2) Deficiencies: Provision of technical expertise to oversee and verify the correction of deficiencies found during the commissioning process.
3) Provision of technical expertise to review and edit operating and maintenance descriptions by system.

3. COORDINATION
a. The Commissioning authority shall receive a copy of all construction documents, addenda, change orders, and appropriate approved submittals and shop drawings directly from the Architect and Contractor.
4. The Commissioning Authority shall disseminate written information and documents to all responsible parties relative to the nature and extent of the communication.
a. The Commissioning Authority is primarily responsible to the Owner, and as such, shall regularly appraise the Architect, the Contractor, and the Owner of progress, pending problems and/or disputes, and shall provide regular status reports on progress with each system. Any potential change in the contractual and/or financial obligations of the owner (credits, change orders, schedule changes, etc.) shall be identified and quantified as soon as possible.
b. The Commissioning Authority shall coordinate the schedule of commissioning activities with the construction schedule. It is possible that some procedures will be completed before the entire Mechanical system is completed.

1.03 SCHEDULE

a. Commissioning of systems shall proceed per the criteria established, in the specific section that follow, with activities to be performed on a timely basis. The Commissioning Authority shall be available to respond promptly to avoid construction delays.
b. Start-up and testing of systems may proceed prior to completion of systems to expedite progress. However, the Commissioning Authority shall not perform testing and verification services that are the primary responsibility of the contractor/vendor in advance of their own testing and verification.
c. Problems observed shall be addressed immediately, responsible parties notified, and actions to correct said deficiencies shall be coordinated in a timely manner.
d. Contractor schedules and scheduling is the responsibility of the Contractor. The Commissioning Authority shall provide commissioning scheduling information to the contractor for review and planning activities.

1.04 RELATED WORK SPECIFIED ELSEWHERE

a. Commissioning requires support from the contractors. The commissioning process does not relieve any contractors from their obligations to complete all portions of work in a satisfactory manner.

PART 2 - PRODUCTS (NOT USED)

PART 3 - EXECUTION

3.01 COMMISSIONING PLAN, SCHEDULE, AND SUBMITTAL PROCESS

A. The Commissioning Authority shall develop and submit a schedule for the commissioning process which is integrated with the construction schedule. Included shall be the required work by all team members (Commissioning Authority, design team, contractors, and the Owner). Overlay with the construction schedule, and include time for test and balance, verification, and functional performance testing.

B. The subcontractor, supplier and manufacturer are responsible to submit with initial submittals a line-by-line submittal compliance document. The compliance document will follow the specification that the submittal is in reference too. The compliance document will have one of the following for each paragraph of the specification: Comply, Exception, or Unable to Comply. With each Exception and Unable to Comply the compliance document will have a detailed explanation.

C. The subcontractor, supplier and manufacturer shall attend a submittal review meeting before any piece of equipment shall be ordered. This meeting will be held and conducted by the Commissioning Authority at a place designated by Commissioning Authority (which typically is the General Contractors Trailer). During this meeting, the CxA, Engineer, and Owner will review the submittal compliance document.

D. The submittals will be marked with Reviewed, Reviewed as Noted, Defer to Engineer, Note, or Revise and Resubmit. Only “Revise and Resubmit” items will have the expectation of a re-submittal. If any item is marked as Revise and Resubmit contractor shall pay all expenses incurred by the CX Authority for the re-review process. This is outlined in section 3.7.

3.02 CONSTRUCTION OBSERVATION

A. This is an additional and separate activity provided by the design team. Construction observation is required as part of the commissioning and coordination process provided by the CxA.

3.03 VERIFICATION AND FUNCTIONAL PERFORMANCE TEST PROCEDURES

A. Commissioning Authority shall develop and document the commissioning procedure to be used. Include a performance checklist and performance test data sheets for each system based on actual system configuration. These procedures shall be reviewed by the appropriate design engineers for technical depth, clarity of documentation and completeness. Emphasis shall be placed on testing procedures that shall determine actual system performance and compliance with the design intent.

B. Most mechanical equipment requires safety devices to stop and/or prevent operation unless minimum safety standards or conditions are met. These may include adequate oil pressure, proof- of-flow, non-freezing conditions, maximum static pressure, maximum head pressure, etc. The Commissioning Authority shall observe the actual performance of safety shutoffs in a real or closely simulated condition of failure.

C. Systems may include safety devices and components that control a variety of equipment operating as a system. Interlocks may be hard-wired or operate from software. Operation of these interlocks shall be verified by the Commissioning Authority.

D. The Commissioning Authority shall determine the acceptance procedures for each system within MEP divisions as required. The acceptance procedures shall incorporate the commissioning standards and successful testing results as referred to throughout mechanical and electrical specifications.

(a) The temperature control system shall have all I/O (input/output) points individually verified for proper function, calibration, and operation. The Commissioning Authority shall review proposed testing procedures, report formats, and observe enough field testing to confirm that all 1/0 points have been properly tested.

(b) All control sequence of operation strategies, alarm generation and reporting shall also be reviewed for proper operation and verified by the Commissioning Authority.

2) The central workstation graphics, point assignments, alarm messages, and logging functions shall be verified.
   (a) A minimum Four (4) weeks of “Clean” trending (no mechanical, software, control loop or Building Management System “BMS” failures) shall be provided on “Any” or “All” BMS systems & points as directed by the C/A. Clean Trending shall be a requirement that is completed prior to Substantial Completion.
   (b) Trending shall be submitted in a graphical Microsoft 2007 Format including all data submitted in the excel workbook. Graphs shall be line graphs shown on printable 11 x 17 pages. Graphs shall have included annotations showing compliance with contract documents.
   (c) ALL points shall be trended and submitted in the above format and as outlined by the Cx Authority. Contractor shall submit during submittal process what shall be trended per each graph to show functionality.

E. The appropriate contractor and vendor(s) shall be informed of what tests are to be performed and the expected results. Whereas some test results and interpretations may not become evident until the actual tests are performed, all parties shall have a reasonable understanding of the requirements. The Commissioning Plan shall address those requirements and be distributed to all parties involved with that system.

F. Acceptance procedures shall confirm the performance of systems to the extent of ' the design intent. When a system is accepted, the Owner shall be assured that the system is complete, works as intended, is correctly documented, and operator training has been performed.

3.04 FIRE SPRINKLER SYSTEMS COMMISSIONIG CHECKLIST

a. Verify programming of vfd’s (minimum speed, auto restart, input/output speed calibration,
   1) alarm on failure, upward and downward ramp time settings).
b. Verify set-up of all required alarms (review automatic dial or automatic e-mail set-up).
c. Verify calibration of air filter alarms.
d. Verify pump head and gpm (all systems, compare test/ balance report to design).
e. Verify that pump strainers are clean

3.05 FUNCTIONAL PERFORMANCE TESTING - OBSERVATION

A. The Contractor shall do the functional performance testing. The Commissioning Authority shall direct and witness these tests. -

B. Tests shall be completed comprehensively and to the extent necessary to enable the Commissioning Authority to assure the Owner and design professional that the systems perform per the design intent.

3.06 RE-TESTTNG

A. Contractor shall, at no additional cost to the Owner, repeat the complete verification test procedure for each test for which acceptable results are not achieved. Repeat tests until acceptable results are achieved.

B. Contractor shall compensate the Owner for costs incurred as the result of tests review or inspection repeated. This includes the costs for the Commissioning Authority, Design Architect, Design Engineers, and Owner’s personnel for billed costs (including travel expenses) for the extraordinary participation of the Owners Representative, Architect, Commissioning Authority, or owner’s staff.

C. All retesting, inspection, or review of equipment or re reviewing of startup sheets or re reviewing of test and balance or re reviewing of controls or re-reviewing of submittals shall be billed at an hour of $250 per hour with a minimum of 4 hours billed per session.

3.07 CORRECTION OF DEFICIENCIES

A. Correct functional performance test deficiencies promptly and schedule retest.

B. Corrections during verification or functional performance test are prohibited to avoid consuming the time of personnel waiting for the test but not involved in making the correction. Exceptions will be allowed if the cause of the failure is obvious and corrective action can be completed in less than five minutes. If corrections are made under this exception, the failure shall be noted on the test data form. A new test data form, marked retest, shall be initiated after the correction has been made. The entire test procedure shall be repeated.

3.08 OPERATING AND MAINTENANCE (O&M) MANUALS

A. The Commissioning Authority shall review the draft form of the O&M manuals provided by the Mechanical contractor and the Electrical contractor. The review process shall verify that O&M instructions meet specifications and are included for all equipment furnished by the contractor, and that the instructions and wiring diagrams are specific (edited where necessary) to the actual equipment provide for this project.

   a. Published literature shall be specifically oriented to the provided equipment indicating required operation and maintenance procedures, parts lists, assembly/disassembly diagrams, and related information.

B. The contractor shall incorporate the standard technical literature into system specific formats for this facility as designed and as actually installed. The resulting O&M information shall be system specific, concise, to the point, and tailored specifically to this facility. The Commissioning Authority shall review and edit these documents as necessary for final corrections by the contractor.

C. The O&M manual review, and coordination efforts shall be completed prior to Owner training sessions, as these documents are to be utilized in the training sessions.

3.09 TRAINING

A. Schedule and coordinate training sessions for the Owner’s staff for each system. Training shall be in a classroom setting with the appropriate schematics, handouts, and visual/audio training aids on- site with equipment.

B. The Commissioning Authority review agenda, which shall be submitted at least four weeks before training, and shall audit the training sessions.

C. The appropriate installing contractors shall provide training on all the major systems per specifications, including peculiarities specific to this project.

D. The equipment vendors shall provide training on the specifics of each major equipment item including philosophy, troubleshooting, and repair techniques.

3.10 RECORD DRAWINGS

A. The Commissioning Authority shall review the as-built contract documents to verify incorporation of both design changes and as-built construction details. Discrepancies noted shall be corrected by the appropriate party.

3.11 EXCLUSIONS

A. Responsibility for construction means and methods: The Commissioning Authority is not responsible for construction means, methods, job safety nor any other construction management functions on the job site.

B. Hands-on work by the Commissioning Authority: The contractors shall provide all services requiring tools or the use of tools to start-up, test, adjust, or otherwise bring equipment and systems into a fully operational state. The Commissioning Authority shall coordinate and observe

1. these procedures (and may make minor adjustments) but shall not perform construction or technician services other than verification of testing, adjusting, balancing, and control function.

END OF SECTION 210800

This page intentionally left blank

SECTION 211300
FIRE-SUPPRESSION SPRINKLER SYSTEMS

PART 1 GENERAL

1.01 SECTION INCLUDES

A. Wet-pipe sprinkler system.

B. System design, installation, and certification.

C. Fire department connections.

PART 2 PRODUCTS

2.01 SPRINKLERS

END OF SECTION 211300

This page intentionally left blank

SECTION 220000
– GENERAL PLUMBING REQUIREMENTS

PART 1 - GENERAL

1.01 RELATED DOCUMENTS:

A. Drawings and general provisions of the Contract, including General and Supplementary Conditions and Division-1 Specification sections, apply to work of this section.
   1. Sections of other Divisions which relate to plumbing work apply to the work of this section. See various Sections on sitework, underfloor work, structural work, finish materials, etc.

B. RELATED SECTIONS: Refer to "Electrical Requirements for Plumbing Equipment Section in Division 22 for basic electrical requirements for all plumbing equipment. Special and specific electrical requirements are specified within each respective equipment specification section.

1.02 SUMMARY: THIS SECTION SPECIFIES THE BASIC REQUIREMENTS FOR PLUMBING INSTALLATIONS AND INCLUDES REQUIREMENTS COMMON TO MORE THAN ONE SECTION OF DIVISION 220000. IT EXPANDS AND SUPPLEMENTS THE REQUIREMENTS OF DIVISION 01000.

A. This Division does not define, nor is it limited by, trade jurisdictions. All work described herein is a part of the General Contract and is required of the Contractor regardless.

1.03 DESCRIPTION OF PROJECT: THE PLUMBING WORK DESCRIBED IN THESE PLUMBING SPECIFICATIONS IS FOR A PROJECT LOCATED AT DAVIS TECHNICAL COLLEGE WELDING TECHNOLOGY BUILDING IN KAYSVILLE, UTAH. DESIGN WEATHER CONDITIONS ARE: 94O DB, 61O WB, AND WINTER 8OF. ALTITUDE READINGS, UNLESS OTHERWISE NOTED, ARE FOR AN ELEVATION OF 4,360 FEET (132892.8 CM) ABOVE SEA LEVEL. MAKE ADJUSTMENT TO MANUFACTURER'S PERFORMANCE DATA AS NEEDED.

1.04 CODES AND PERMITS, AUTHORITIES HAVING JURISDICTION:

A. The plumbing work shall be performed in strict accordance with the applicable provisions of the various codes, ordinances and adoptions pertaining to the project location in effect on the date of invitation for bids. All materials and labor necessary to comply with rules, regulations and ordinances shall be provided. Where the drawings and/or specifications indicate materials or construction in excess of code requirements, the drawings and/or specifications shall govern.

B. The Contractor shall hold and save the Owner and Architect/Engineer free and harmless from liability of any nature or kind arising from his failure to comply with codes and ordinances.

C. Permits necessary for the prosecution of the work under this contract shall be secured and paid for by the contractor(s) include connection fees related to utility hookups. Contractor shall include all sewer, storm drainage and water connection fees and shall verify current rate with Kaysville City prior to bid.

D. REFERENCE STANDARDS:
   1. American Welding Society
   2. International Mechanical Code 2021 with Utah State Amendments
   3. International Building Code 2021 with Utah State Amendments
   4. International Plumbing Code 2021 with Utah State Amendments
   5. International Fuel Gas Code 2021 with Utah State Amendments
   6. NFPA Codes
   7. Local Fuel Utility Regulations
   8. Local Power Utility Regulations
   9. American Gas Association
   10. ASME Codes for Pressure Vessels and Piping
   11. ANSI B31.1 Piping
      a. ANSI A117.1 Buildings and Facilities Accessible To and Usable by Physically Handicapped People.
      b. ADA: Americans with Disability Act

E. Final inspection by the Architect/Engineer will not be made nor Certificate of Substantial Completion issued until certificates of acceptability from the Authorities having jurisdiction are delivered.

1.05 DEFINITION OF PLANS AND SPECIFICATIONS: THE PLUMBING DRAWINGS SHOW THE GENERAL ARRANGEMENT OF PIPING, EQUIPMENT, ETC., AND SHALL BE FOLLOWED AS CLOSELY AS THE ACTUAL BUILDING CONSTRUCTION AND THE WORK OF OTHER TRADES WILL PERMIT. THE ARCHITECTURAL AND STRUCTURAL DRAWINGS SHALL BE CONSIDERED AS PART OF THE WORK INSOFAR AS THESE DRAWINGS FURNISH THE CONTRACTOR WITH INFORMATION RELATING TO DESIGN AND CONSTRUCTION OF THE BUILDING. ARCHITECTURAL DRAWINGS SHALL TAKE PRECEDENCE OVER PLUMBING DRAWINGS FOR ACTUAL LOCATIONS, QUANTITIES, ETC. OF PLUMBING COMPONENTS. REQUEST CLARIFICATION AND PARTICIPATE IN RESOLUTION IN THE EVENT OF CONFLICT.

A. Because of the small scale of the plumbing drawings, it is not possible to indicate all offsets, fittings and accessories which may be required. Investigate the structural and finish conditions affecting the work and arrange the work accordingly, providing such extensions, fittings, valves and accessories to meet the conditions as may be required. Some small scale work is not shown such as control conduit and piping, incidental piping, specialties. Provide as directed by note or specification.

B. Examine the actual construction site prior to bidding and obtain an understanding of the conditions under which the work will be performed. No allowances will be made for failure to make such examination.

C. During construction, verify the dimensions governing the plumbing work at the building. No extra compensation shall be claimed nor allowed because of differences between actual dimensions and those indicated on the drawings. Examine adjoining work on which plumbing work is dependent for perfect efficiency, and report any work of other trades which must be corrected. No waiver of responsibility for defective work shall be claimed nor allowed due to failure to report unfavorable conditions affecting the plumbing work.

1.06 ROUGH-IN:

A. Verify final locations for rough-ins with field measurements and with the requirements of the actual equipment to be connected.

B. Refer to equipment specifications in Divisions 2 through 50 for rough-in requirements.

1.07 PLUMBING INSTALLATIONS:

A. Coordinate plumbing equipment and materials installation with other building components.

B. Verify all dimensions by field measurements.

C. Arrange for chases, slots, and openings in other building components to allow for plumbing installations.

D. Coordinate the installation of required supporting devices and sleeves to be set in poured in place concrete and other structural components, as they are constructed.

E. Sequence, coordinate, and integrate installations of plumbing materials and equipment for efficient flow of the Work. Give particular attention to large equipment requiring positioning prior to closing-in the building.

F. Coordinate the cutting and patching of building components to accommodate installation of plumbing equipment and materials.

G. Where mounting heights are not detailed or dimensioned, install plumbing services and overhead equipment to provide the maximum headroom possible.

H. Install plumbing equipment to facilitate maintenance and repair or replacement of equipment components. As much as practical, connect equipment for ease of disconnecting, with minimum of interference with other installations.

I. Coordinate the installation of plumbing materials and equipment above ceilings with suspension system, ductwork, plumbing equipment, light fixtures, and other installations.

J. Coordinate connection of plumbing systems with exterior underground and overhead utilities and services. Comply with requirements of governing regulations, franchised service companies, and controlling agencies. Provide required connection for each service.

K. Where plumbing work penetrates other trade work such as gypsum board walls, etc., penetration shall be neatly cut and walls shall be filled and patched.

1.08 ACCESSIBILITY:

A. Install equipment and materials to provide required access for servicing and maintenance. Coordinate the final location of concealed equipment and devices requiring access with final location of required access panels and doors. Allow ample space for removal of all parts that require replacement or servicing.

B. Extend all grease fittings to an accessible location.

C. Establish required clearance to all installation features involving operation and maintenance. Respect manufacturer's recommendations for access and clearance.

D. Access Doors - General: All items of plumbing equipment which may require adjustment, maintenance, replacement or which control a system function shall be made readily accessible to personnel operating the building.

1. Provide access doors in floors, walls, ceiling and partitions to valves, cleanouts, chases, etc. Access doors shall be all-steel construction equivalent to "Milcor" by Inland Ryerson in a style approved by the Owner's Representative. Doors shall be 24" x 24", or as needed, with screwdriver latches.

1.09 CHANGE ORDERS: SEE GENERAL CONDITIONS.

1.10 ALTERNATIVE CONSTRUCTION/SUBSTITUTION: THESE DOCUMENTS OUTLINE A WAY IN WHICH THE OWNER MAY BE DELIVERED A FUNCTIONAL AND RELIABLE FACILITY. DRAWINGS AND SPECIFICATIONS DESCRIBE REASONABLE ENGINEERING PRACTICE FOR THE CONTRACTOR TO FOLLOW.

A. Coordination between trades may result in periodic needs to adjust the installation from that indicated, but in no case shall the intended function be compromised.

B. The Contractor may perceive some work methods which differ from those specified which could save time and effort. These may be presented to the Architect with a breakdown of possible cost savings for review. Implement only with authorization.

C. Materials substitutions will generally be covered in a review process prior to bidding. After bidding, substitutions shall be proposed only on the basis of definitive cost accounting and implemented only with authorization.

1.11 CUTTING AND PATCHING:

A. Layout the project ahead of time, providing sleeves and blockouts and have work specifically formed, poured and framed to accommodate plumbing installations. Cut and patch only as needed.

B. Refer to the Division 1 Section: CUTTING AND PATCHING for general requirements for cutting and patching.

C. RECORD DRAWINGS: During the course of construction, maintain a set of drawings, specifications, change orders, shop drawings, addenda, etc., for reference and upon which all deviations from the original layout are recorded. These marked-up documents shall be turned over to the Architect/Engineer at the conclusion of the work so that the original tracings can be revised. If the Contractor fails to mark up the prints, he shall reimburse the Architect/Engineer for time required to do so.

D. Refer Specification Section: BASIC ELECTRICAL REQUIREMENTS for cutting and patching electrical equipment, components, and materials.

E. Do not endanger or damage installed Work through procedures and processes of cutting and patching.

F. Arrange for repairs required to restore other and any work damaged as a result of plumbing installations.

G. No additional compensation will be authorized for cutting and patching Work that is necessitated by ill-timed, defective, or non-conforming installations.

H. Perform cutting, fitting, and patching of plumbing equipment and materials required to:
1. Uncover Work to provide for installation of ill-timed Work;
2. Remove and replace defective Work;
3. Remove and replace Work not conforming to requirements of the Contract Documents;
4. Remove samples of installed Work as specified for testing:
5. Install equipment and materials in existing structures.

I. Upon written instructions from the Architect/Engineer, uncover and restore Work to provide for Architect/Engineer observation of concealed Work.

J. Cut, remove and legally dispose of selected plumbing equipment, components, and materials as indicated, including, but not limited to removal of plumbing piping and other plumbing items made obsolete by the new Work.

K. Protect the structure, furnishings, finishes, and adjacent materials not indicated or scheduled to be removed.

L. Provide and maintain temporary partitions or dust barriers adequate to prevent the spread of dust and dirt to adjacent areas.

1.12 SUBMITTALS: SUBMITTAL OF SHOP DRAWINGS, PRODUCT DATA, AND SAMPLES WILL BE ACCEPTED ONLY FROM THE CONTRACTOR TO THE ARCHITECT. DATA SUBMITTED FROM SUBCONTRACTORS AND MATERIAL SUPPLIERS DIRECTLY TO THE ARCHITECT/ENGINEER WILL NOT BE PROCESSED. THE CONTRACTOR SHALL DOCUMENT EACH TRANSMITTAL AND SHALL SIGN AND STAMP THE SUBMITTAL INDICATING THAT IT HAS BEEN REVIEWED AND IS IN COMPLIANCE WITH THE CRITERIA OF THE PROJECT, ANY EXCEPTIONS BEING CLEARLY NOTED.

A. SHOP DRAWINGS: As soon as possible after the contract is awarded, submit to the Architect, an electronic copy of the descriptive literature covering all equipment and materials to be used in the installation of plumbing systems for this project. Written confirmation of acceptable review by the Owner's Representative shall be obtained before ordering, purchasing, acquiring or installing any such equipment or materials for the project.
1. The submittals shall be prepared in an orderly manner after the order of this specification, contained in a single PDF format file with summary pages for each item or group of related items. Submitted literature shall clearly indicate performance, quality, utility requirements, dimensions of size, connection points and other information pertinent to effective review.
2. Equipment must fit into the available space with allowance for operation, maintenance, etc. The Contractor shall take full responsibility for space and utility requirements for equipment installed.
3. Factory-wired equipment shall include shop drawings of all internal wiring to be furnished with unit.
4. Review of the Architect/Engineer is for general conformance of the submitted equipment of the project specification; in no way does such approval relieve Contractor of his obligation to furnish equipment and materials that comply in detail to the specification, nor does it relieve the Contractor of his obligation to determine actual field dimensions and conditions which may affect his work.

1.13 OPERATION AND MAINTENANCE TRAINING:

A. Instruction Of Owner's Personnel: At a time prior to Owner making use of a device or system, and in general after testing and balance work for a building or major system is complete,

prepare, schedule and conduct a series of training sessions for Owner's operating and supervisory personnel. Instructions shall cover each device and system with emphasis on understanding of the purpose and function, the maintenance requirements and the proper adjustment and operating technique.

B. Instruct building operating staff in operation and maintenance of plumbing systems utilizing Operation and Maintenance Manual when so doing.

C. Minimum instruction periods shall be as follows:
   1. Plumbing – 2 hours, each of 1 days, (2 hours total).

D. Conduct initial instruction periods after pre-final inspection when systems are properly working and before final payment is made. Schedule subsequent visits throughout the first year.

E. None of these instructional periods shall overlap another.

F. Vendors for each piece of equipment controls, etc., shall participate along with the Contractor(s).

1.14 GUARANTEE/WARRANTY: THE FOLLOWING GUARANTEE IS A PART OF THIS SPECIFICATION AND SHALL BE BINDING ON THE PART OF THE CONTRACTOR AND HIS ASSIGNS:

1. "Contractor guarantees that this installation is in accordance with the terms of the Contract and is free from mechanical defects. He agrees to replace or repair, to the satisfaction of the Owner's Representative, any part of this installation which may fail or be determined unacceptable within a period of one (1) year after final acceptance. See also the General Conditions of these specifications. Failed equipment in the repair or replacement shall be guaranteed for one full year from the date of recommission."

B. Compile and assemble the warranties required by Division 15 into a separated set of vinyl covered, insert sheets, tabulated and indexed for each reference, included in the O & M Manual.

C. Provide complete warranty information for each item to include product or equipment to include data of beginning of warranty or bond; duration of warranty or bond; and names, addresses, and telephone numbers and procedures for filing a claim and obtaining warranty services.

1.15 PLUMBING SYSTEMS AND EQUIPMENT SHALL NOT BE CONSIDERED FOR SUBSTANTIAL COMPLETION AND INITIATION OF WARRANTY UNTIL THEY HAVE PERFORMED IN SERVICE CONTINUOUSLY WITHOUT MALFUNCTION FOR AT LEAST THIRTY (30) WORKING DAYS.

1.16 TESTS AND CERTIFICATIONS: MAKE ALL TESTS REQUIRED BY CODE OR SPECIFICATION IN THE PRESENCE OF A REPRESENTATIVE OF THE OWNER, RECORDED AND CERTIFIED BY THE CONTRACTOR AND REPRESENTATIVE. INVOLVE LOCAL AUTHORITIES WHERE REQUIRED.

1.17 PERMITS, FEES, LICENSES: PAY FOR ALL PERMITS, FEES AND LICENSES REQUIRED FOR THE CONDUCT OF THE SPECIFIED WORK AND BE RESPONSIBLE FOR ALL CRITERIA ASSOCIATED WITH THE SAME. COMPLY WITH REQUIREMENTS FOR INSPECTION, CERTIFICATIONS, ETC.

1.18 CEILING SPACE COORDINATION: CAREFULLY COORDINATE CEILING CAVITY SPACE WITH ALL TRADES; HOWEVER, INSTALLATION OF PLUMBING EQUIPMENT WITHIN THE CEILING CAVITY SPACE ALLOCATION, IN THE EVENT OF CONFLICT, SHALL BE IN THE FOLLOWING ORDER: PLUMBING WASTE LINES; SUPPLY, RETURN AND EXHAUST DUCTWORK; DOMESTIC HOT AND COLD WATER; FIRE PROTECTION; CONTROL CONDUIT.

PART 2 - GENERAL PLUMBING MATERIALS AND METHODS

2.01 QUALITY OF MATERIALS AND EQUIPMENT:

A. All equipment and materials shall be new, and shall be the standard products of manufacturers regularly engaged in the production of plumbing, heating, ventilating and air conditioning equipment, and shall be the manufacturer's latest design. Specific equipment shown in

schedules on drawings and specified herein is to be the basis for the Contractor's bid. Provisions for substitute equipment are outlined in the General Conditions. All materials shall be produced by manufacturing plants located in the United States of America.

B. Furnish and install all major items of equipment specified in the equipment schedules on the drawings complete with all accessories normally supplied with catalog items listed, and all other accessories necessary for a complete and satisfactory installation.

2.02 PROTECTION OF MATERIALS AND EQUIPMENT:

A. Close pipe and duct openings with caps or plugs to prevent lodgement of dirt or trash during the course of installation. Cover equipment tightly and protect against dirt, water and chemical or mechanical injury. Plumbing fixtures intended for the final installation shall not be used by the construction forces. At the completion of the work, clean fixtures, equipment and materials and polish thoroughly and deliver in a factory dock condition for the Owner's acceptance. Make damage and defects developing before acceptance of the work good at Contractor's expense.

B. Do not make temporary use of project equipment during construction without the consent of the Owner.

QUALIFICATIONS OF WORKMEN:

A. All mechanics shall be capable journeymen, skilled in the work assigned to them. Apprentices may be used with appropriate direction.

B. Employ no unskilled persons in the work which he is given to do; execute all work in a skillful and workmanlike manner. All persons employed upon this work shall be competent, faithful, orderly and satisfactory to the Owner. Should the Owner's Representative deem anyone employed on the work incompetent or unfit for his duties, and so certify, Contractor shall dismiss him and he shall not be again employed upon the work without permission of the Owner's Representative.

C. All welders involved in welding of pressure piping systems shall be certified in accordance with Section IX of the ASME Boiler and Pressure Vessel Code. Written verification of successful test completion shall be submitted to Architect prior to initiating work.

3.02 FOREMAN: DESIGNATE A GENERAL PLUMBING FOREMAN TO THE OWNER'S REPRESENTATIVE TO BE CONSISTENTLY AVAILABLE ON SITE FOR CONSULTATION. DO NOT REPLACE THIS INDIVIDUAL WITHOUT PRIOR APPROVAL FROM THE OWNER'S REPRESENTATIVE.

3.03 USE OF COMMON VENDORS: REGARDLESS OF SUBCONTRACT DELEGATIONS, COORDINATE PURCHASING BETWEEN TRADES SO THAT EQUIPMENT AND MATERIALS OF SIMILAR NATURE COME FROM A SINGLE VENDOR, I.E., ALL PACKAGE HVAC UNITS SHALL BE COMMON SOURCE. VALVES, ETC., THE SAME. DO NOT BURDEN THE OWNER WITH MULTIPLE BRANDS OF SIMILAR EQUIPMENT UNLESS SO DIRECTED.

ROOF/WALL/FLOOR PENETRATIONS - FLASHINGS:

A. Sleeves through the floor into dry rooms shall be flush with the floor, caulked and sealed.

B. Pipe sleeves shall allow for movement of the pipe due to expansion and contraction, yet to include seismic restraint.

C. Refer to Section for fire stopping requirements.

D. FLASHINGS:

1. Flash all pipes and ducts penetrating the roof. Vent pipes terminating within 24" of the roof shall have a seamless flashing of 6-pound lead clamped to the pipe, and with a flashing shield extended horizontally not less than 12" all around. For single ply membrane roof, follow manufacturer's directions, provide required flashing components.
2. For built-up and gravel roof, clamp roof drains to a 6-pound lead flashing extending 18" all around. For single ply membrane roof, follow manufacturer's directions.
3. Other piping penetrating the roof shall be flashed and counterflashed. See drawings or Architect/Engineer for additional detail.

4. Make all ductwork penetrating the roof watertight with flashings, counterflashing and sealant. Provide curbs for all such openings.

4.02 EXCAVATING AND BACKFILLING (GENERAL):

A. Provide all excavation, trenching and backfilling for Division 22 00 00 underground piping work. Excavation and backfilling shall comply with applicable paragraphs of Division 2. Tamp bottoms of trenches hard and, for soil and waste piping, grade to secure uniform fall of 1/4" per foot, or as noted. Excavate bell holes for hub and spigot pipes so that pipe rests on solid ground for its entire length. Lay sewer and water pipe in separate trenches, except where otherwise noted, as detailed.

B. After work has been tested, inspected and approved by the Owner's Representative and/or State/Local Inspector, and prior to backfilling, clean the excavation of all rubbish, and clean backfill materials free of trash. Backfill shall be placed in horizontal layers not exceeding 12" in thickness, properly moistened. Mechanically compact each layer with suitable equipment to a dry density of not less than 95 percent as determined by the Modified AASHO Test T-18O. See Division 2 for additional requirements.
   1. Provide adequate shoring to safeguard workers from cave-ins for all excavations.
      a. In areas where General Contractor has finish grade work to do, Plumbing Contractor shall backfill and compact to 8" below finish grade. Where no finish surface work is to be done, Plumbing Contractor shall backfill and compact to and match adjacent undisturbed surface with allowance for settling, etc.
   2. Protect from damage all existing underground utilities or utility tunnels indicated on the contract drawings (or field located for the Contractor by the Owner prior to excavation operations). Any damage to identified existing utilities or utility tunnels shall be repaired by the Contractor at no cost to the Owner.

4.03 HANGERS AND SUPPORTS (GENERAL):

A. Provide hangers and/or supports for all equipment, piping and ductwork. Primary information is contained in these specifications and on the drawings.

B. Provide hangers and supports to correlate with seismic restraint and vibration isolation.

4.04 MANUFACTURER'S DIRECTIONS: INSTALL ALL EQUIPMENT IN STRICT ACCORDANCE WITH ALL DIRECTIONS AND RECOMMENDATIONS FURNISHED BY THE MANUFACTURER. WHERE SUCH DIRECTIONS ARE IN CONFLICT WITH THE PLANS AND SPECIFICATIONS, REPORT SUCH CONFLICTS TO THE ARCHITECT, WHO SHALL DIRECT ADJUSTMENTS AS HE DEEMS NECESSARY AND DESIRABLE.

4.05 LUBRICATION: LUBRICATE EQUIPMENT AT STARTUP. THEN, PROVIDE ALL LUBRICANTS FOR THE OPERATION OF ALL EQUIPMENT UNTIL ACCEPTANCE BY THE OWNER. THE CONTRACTOR IS HELD RESPONSIBLE FOR ALL DAMAGE TO BEARINGS WHILE THE EQUIPMENT IS BEING OPERATED BY HIM.

4.06 ELECTRICAL WIRING AND CONTROL:

A. Motor starters, related motor starter equipment and power wiring indicated on the electrical drawings and control diagrams shall be furnished and installed under Division 16000 of this Specification. Items of electrical control equipment specifically mentioned to be furnished by the Division 15000 either in these specifications or on the electrical or plumbing drawings, shall be furnished and mounted by this Contractor and shall be connected under and as required by this Division 15000 and Division 16000 of these specifications.

B. Refer to the control equipment and wiring shown on the diagrams. Any changes or additions required by specific equipment furnished shall be the complete responsibility of the contractor.

C. Division must be fully coordinated with Division 260000 to insure that all required components of the work are included and fully understood. No additional cost shall accrue to the Owner as a result of lack of coordination.

D. Where the detailed electrical work is not shown on the electrical drawings, the Plumbing Contractor shall furnish, install and wire or have prewired all specified and necessary controls

for equipment specified for this project. The objective of this paragraph is to make sure a complete operating system is obtained at no additional cost to the Owner for field wiring required related to the equipment.

4.07 FLUSHING AND DRAINING OF SYSTEMS/CLEANING OF PIPING: FILL, CLEAN AND FLUSH AND STERILIZE WHERE APPROPRIATE, ALL WATER PIPING SYSTEMS WITH WATER AND DRAIN THESE SYSTEMS BEFORE THEY ARE PLACED IN OPERATION. BLOW OUT ALL OTHER PIPING SYSTEMS WITH COMPRESSED AIR OR NITROGEN TO REMOVE FOREIGN MATERIALS THAT MAY HAVE BEEN LEFT OR DEPOSITED IN THE PIPING SYSTEM DURING ITS ERECTION.

4.08 ARCHITECTURAL ACCESS DOORS:

A. Extent of Work: Provide architectural grade access doors at each point of required access to piping valves, and specialties, concealed equipment, etc. Coordinate this work with other sections for ceilings, walls, etc.

B. Material: Steel framed doors with heavy duty hinges and latch type locking mechanisms with surface finish configuration to accept, match or correlate with adjacent surface.
   1. Product equivalent to Inland-Ryerson “Milcor”.

C. Installation: Complete, blended into adjacent work.

4.09 JOBSITE CLEANUP:

A. Keep site clean during progress of work.

B. At the conclusion of work, clean all installation thoroughly.
   1. Leave equipment in a factory dock condition. Correct any damage and touch up or repaint if necessary.
   2. Remove all debris from site.

END OF SECTION 220000

SECTION 220100
OPERATION AND MAINTENANCE OF PLUMBING

PART I - GENERAL

1.01 RELATED DOCUMENTS:

A. Drawings and general provisions of Contract, including General and Supplementary Conditions and Division-1 Specifications sections, apply to work of this section.

B. Division-22 Plumbing sections apply to work of this section.

1.02 SUMMARY:

A. Furnish two sets of bound operation and maintenance manuals. Manuals shall contain descriptive drawings and data which identify equipment installed at the project and detail the procedures and parts required to maintain and repair the equipment. Copies of approved submittals shall be included for all equipment.

1.03 OPERATION AND MAINTENANCE MANUAL FOR PLUMBING SYSTEMS:

A. General:
   1. The "Operating and Maintenance Manual" is a bound compilation of drawings and data that the Owner requires for each building or project. These manuals, complete with drawings and data, shall be furnished to the Owner.
   2. The plumbing contractor has overall responsibility to obtain the necessary data from and compile the data as set forth in this specification, including items or equipment purchased by the Owner and delivered to the contractor for installation.
   3. The number of binders (or "volumes") required for each individual building or project will depend on the amount of information to be catalogued.
   4. All information included shall be legible and sufficiently marked to indicate the exact size, model, type, etc., of equipment furnished and installed.

B. Purpose: The Operating and Maintenance Manual is prepared to provide a ready reference to all important pieces of plumbing and electrical equipment installed on the project. It is also to provide the necessary operating and maintenance data for use by service personnel. It is also to provide information required for checking equipment performance or for planning of plant expansion or redesign.

PART II - MATERIALS AND METHODS

2.01 CONTENTS AND INDEXING:

A. Manuals shall contain descriptions of the building systems in sufficient detail to adequately indicate the type of systems installed and the basic details of their operation.

B. All purchased equipment data shall be used to designate the sections. Within each section additional indexing of component parts may be required.

C. Operation and Maintenance Manuals shall contain to the fullest extent all possible information pertinent to the equipment. The arrangement and type of information to be filed shall be as follows:
   1. Copy of purchase order with changes (if any).
   2. Outline drawings, special construction details, "as built" electrical wiring and control diagrams for all major and supplementary systems.
   3. Manufacturer's test or calculated performance data and certified test curves.
   4. Installation, operating, and maintenance instructions, including a complete parts list and sectional drawing with parts identification numbers. Mark with model, size and plan number.
   5. Manufacturer's brochure marked to indicate exact equipment purchased. Brochures on component parts supplied by a manufacturer with his equipment, but not manufactured directly by him, shall also be included.

6. The serial numbers of each item of equipment installed are to be listed with the model numbers and plan symbols.
7. Include a Table of Contents. The contents shall be divided with bookmarked index into the following suggested parts:
   a. Building and System Descriptions
   b. Purchased Equipment Data
   c. Test Reports and Valve Charts
   d. Preventative Maintenance Recommendations
8. A copy of the approved submittals for each piece of equipment.
9. A copy of all testing, adjusting and balancing reports.
10. Wiring diagrams, marked with model and size and plan symbol.
11. Operating and Maintenance Manuals data for Part I shall be obtained directly from the plumbing and electrical consultants. (Allow consultant preparation cost.)
12. The index shall contain the name and address of the manufacturer and, if different, where replacement and repair parts may be obtained.

END OF SECTION 220100

SECTION 220519
– METERS AND GAGES FOR PLUMBING PIPING

PART I - GENERAL

1.01 REFERENCE STANDARDS

A. AWWA C701 - Cold-Water Meters -- Turbine Type, for Customer Service; 2019.

1.02 RELATED DOCUMENTS:

A. Drawings and general provisions of Contract, including General and Supplementary Conditions and Division-1 Specification sections, apply to work of this section.

B. This section is Division-22 Plumbing section, and is part of each Division-22 section making reference to meters and gages specified herein.

1.03 SUMMARY

A. Extent of meters and gages required by this section is indicated on drawings and/or specified in this and other Division-22 sections.

B. Meters and gages specified in this section include the following:
   1. Temperature Gages and Fittings.
      a. Glass Thermometers.
      b. Thermometer Wells.
      c. Temperature Gage Connector Plugs.
      d. Digital Thermometers
   2. Pressure Gages and Fittings.
      a. Pressure Gages.
      b. Pressure Gage Valves.
      c. Pressure Gage Connector Plugs.

C. Meters and gages furnished as part of factory-fabricated equipment, are specified as part of equipment assembly in other Division-22 sections.

1.04 QUALITY ASSURANCE:

A. Manufacturer's Qualifications: Firms regularly engaged in the manufacture of meters and gages, of types and sizes required, whose products have been in satisfactory use in similar service for not less than 5 years.

SUBMITTALS:

A. Product Data: Submit manufacturer's technical product data, including installation instructions for each type of meter and gauge. Include scale range, ratings and calibrated performance curves, certified where indicated. Submit meter and gage schedule showing manufacturer's figure number, scale range, location, and accessories for each meter and gage.

B. Maintenance Data: Submit maintenance data and spare parts lists for each type of meter and gauge. Include this data and product data in Maintenance Manual; in accordance with requirements of Division 1.

REFERENCES:

A. Codes And Standards:
   1. UL Compliance: Comply with applicable UL standards pertaining to meters and gauges.

PART II - PRODUCTS

4.01 GLASS THERMOMETERS:

A. General: Provide glass thermometers of materials, capacities, and ranges indicated, designed and constructed for use in service indicated.

B. Case: Die cast aluminum finished in baked epoxy enamel or extruded brass, glass front, spring secured, 9" long. Separable socket (union type).

C. Adjustable Joint: Die cast aluminum, finished to match case, 180 degrees adjustment in vertical plane, 360 degrees adjustment in horizontal plane, with locking device. Stainless steel bulb chamber.

D. Tube And Capillary: Stainless steel bulb chamber. Mercury filled, magnifying lens, 1% scale range accuracy, shock mounted.

E. Scale: Satin faced, non-reflective aluminum, permanently etched markings.

F. Stem: Copper-plated steel, or brass, for separable socket, length to suit installation.

G. Range: Conform to the following:
   1. Hot Water: 30o - 240oF with 2oF scale divisions.
   2. Cold Water: 0o - 100oF with 2oF scale divisions.

H. Manufacturer: Subject to compliance with requirements, provide glass thermometers of one of the following:
   1. Marshalltown Instruments, Inc.
   2. Marsh
   3. Trerice (H.O.) Co.
   4. Weksler
   5. Weiss Instruments, Inc.
   6. U.S. Gauge

4.02 THERMOMETER WELLS:

A. General: Provide thermometer wells constructed of brass or stainless steel, pressure rated to match piping system design pressure. Provide 2" extension for insulated piping. Provide cap nut with chain fastened permanently to thermometer well.

B. Manufacturer: Same as thermometers.

4.03 TEMPERATURE/PRESSURE GAGE CONNECTOR PLUGS:

A. General: Provide temperature gauge connector plugs pressure rated for 500 psi (3447.38 kPa) and 200 degrees Fahrenheit (93.33 degrees Celsius). Construct of brass and finish in nickel-plate, equip with 1/2" NPS fitting, with self-sealing valve core type neoprene gasketed orifice suitable for inserting 1/8" O.D. probe assembly from dial type insertion thermometer. Equip orifice with gasketed screw cap and chain. Provide extension, length equal to insulation thickness, for insulated piping.

B. Manufacturer: Subject to compliance with requirements, provide temperature gauge connector plugs of one of the following:
   1. Peterson Equipment Co., SISCO, Universal, Weksler.

4.04 PRESSURE GAGES:

A. General: Provide pressure gauges of materials, capacities, and ranges indicated, designed and constructed for use in service indicated.

B. Type: General use, 1% accuracy, ANSI B40.1 grade A, phosphor bronze bourdon type, bottom connection.

C. Case: Drawn steel or brass or phenolic, glass lens, 4-1/2" diameter.

D. Connector: Brass with 1/4" male NPT.

E. Scale: White coated aluminum, with permanently etched markings.

F. Range: Conform to the following; place operating pressure in mid-range.
   1. Water: 0 - 100 psi (689.48 kPa) - 160 psi (1103.16 kPa), as needed.

G. Manufacturer: Subject to compliance with requirements, provide pressure gauges of one of the following:
   1. U.S. Gauge
   2. Marsh Instrument Co.
   3. Marshalltown.

4. Trerice.
5. Weiss.
6. Weksler.

4.05 PRESSURE GAGE VALVES:

A. Equipment: Provide turbine type meter constructed to comply with all performance and material standards of AWWA C701, 175 psi (1206.58 kPa) working pressure. Bronze housing with flanged connections with sealed register reading gallons sized for 200 gpm flow rate at maximum of 5 psi (34.47 kPa) pressure drop with accuracy of 100% ± 1% of flow. Provide with remote reading type head.

B. Manufacturer: Same as for pressure gauges.

WATER METER

A. General: Provide pressure gauge valves between pressure gauges and gauge tees on piping systems. Construct gauge valve of brass bar stock with 1/4" female NPT on each end, and knurled handle brass plug or use 1/4" ball valve or Crane 88 needle valve (for steam).

B. Manufacturer:
1. Sensus - TRPL
2. Substitutions: See Section 016000 – Product Requirements

PART III - EXECUTION

6.01 INSPECTION: EXAMINE AREAS AND CONDITIONS UNDER WHICH METERS AND GAUGES ARE TO BE INSTALLED. DO NOT PROCEED WITH WORK UNTIL UNSATISFACTORY CONDITIONS HAVE BEEN CORRECTED IN MANNER ACCEPTABLE TO INSTALLER.

6.02 INSTALLATION OF TEMPERATURE GAUGES:

A. General: Install temperature gauges in vertical upright position, and tilted so as to be easily read by observer standing on floor.

B. Locations: Install in the following locations, and elsewhere as indicated:
1. At inlet and outlet of each water heater.
2. At inlet and outlet of each mixing valve.

C. Thermometer Wells: Install in piping tee where indicated, in vertical upright position. Fill well with oil or graphite, secure cap.

D. Temperature Gauge Connector Plugs: Install in piping tee where indicated, located on pipe at most readable position. Secure cap.

6.03 INSTALLATION OF PRESSURE GAGES:

A. General: Install pressure gages in piping tee with pressure gage bar stock valve located on pipe at most readable position.

B. Locations: Install in the following locations, and elsewhere as indicated:
1. At suction and discharge of each pump, single gage, mani-folded to include inlet strainer.
2. Across each pressure reducing valve.
3. At water service connection to domestic cold water.
4. At inlet and outlet of strainer.

C. Pressure Gage Valves: Install in piping tee with snubber for water.

D. Pressure Gage Connector Plugs: Install in piping tee where indicated, located on pipe at most readable position. Secure cap.

END OF SECTION 220519

This page intentionally left blank

SECTION 220523
DUTY VALVES FOR PLUMBING PIPING

PART I - GENERAL

1.01 REFERENCE STANDARDS

A. ASSE 1070 - Performance Requirements for Water Temperature Limiting Devices; 2020.

1.02 RELATED DOCUMENTS:

A. Drawings and general provisions of Contract, including General and Supplementary Conditions and Division-1 Specification sections, apply to work of this section.

B. This section is Division-22 Plumbing section, and is part of each Division-22 section making reference to valves specified herein.

1.03 SUMMARY:

A. Extent of valves required by this section is indicated on drawings and/or specified in other Division-22 sections.

B. Types of valves specified in section include the following:
   1. Drain Valves.
   2. Ball Valves.
      a. Check Valves.
      b. Pressure Reducing valve
      c. Pressure Reducing Zone Assemblies

C. Valves furnished as part of factory-fabricated equipment, are specified as part of equipment assembly in other Division 22 sections.

1.04 QUALITY ASSURANCE:

A. MANUFACTURER'S QUALIFICATIONS: Firms regularly engaged in manufacture of valves, of types and sizes required, whose products have been in satisfactory use in similar service for not less than 5 years.

B. VALVE TYPES: Provide valves of same type by same manufacturer.

C. VALVE IDENTIFICATION: Provide valves with manufacturer's name (or trademark) and pressure rating clearly marked on valve body.

1.05 SUBMITTALS:

A. PRODUCT DATA: Submit manufacturer's technical product data, including installation instructions for each type of valve. Include pressure drop curve or chart for each type and size of valve. Submit valve schedule showing Manufacturer's figure number, size, location, and valve features for each required valve.

B. SHOP DRAWINGS: Submit manufacturer's assembly-type (exploded view) shop drawings for each type of valve, indicating dimensions, weights, materials, and methods of assembly of components.

C. MAINTENANCE DATA: Submit maintenance data and spare parts lists for each type of valve. Include this data, product data, and shop drawings in Maintenance Manual; in accordance with requirements of Division 1.

1.06 REFERENCES:

A. CODES AND STANDARDS:
   1. MSS Compliance: Mark valves in accordance with MSS-25 "Standard Marking System for Valves, Fittings, Flanges and Unions".
   2. ANSI Compliance: For face-to-face and end-to-end dimensions of flanged- or welded-end valve bodies, comply with ANSI B16.10 "Face-to-Face and End-to-End Dimensions of Ferrous Valves".

3. UL and FM Compliance: Provide valves used in fire protection piping, which are UL-listed and FM approved.

PART II - PRODUCTS

2.01 VALVES:

A. GENERAL: Provide factory-fabricated valves recommended by manufacturer for use in service indicated. Provide valves of types and pressure ratings indicated; provide proper selection as determined by Installer to comply with installation requirements. Provide end connections which properly mate with pipe, tube, and equipment connections. Where more than one type is indicated, selection is Installer's option.

B. SIZES: Unless otherwise indicated, provide valves of same size as upstream pipe size.

C. OPERATORS: Provide handwheels, fastened to valve stem, for valves other than quarter-turn. Provide lever handle for quarter-turn valves, 5" and smaller, other than plug valves. Provide one wrench for every 10 plug valves. Provide gear operators for quarter-turn valves 6" and larger. Provide chain-operated sheaves and chains for overhead valves 4" and larger over 8'-0" AFF.

D. CONNECTIONS: Unless otherwise noted for a particular reason, any valve 2" and larger shall have flanges.

2.02 MANUFACTURERS: UNLESS LISTED OTHERWISE SUBJECT TO COMPLIANCE WITH REQUIREMENTS, PROVIDE VALVES OF ONE OF THE MANUFACTURERS LISTED FOR EACH TYPE OF VALVE. ALL VALVES OF THE SAME TYPE SHALL BE OF THE SAME MANUFACTURER.

2.03 DOMESTIC COLD WATER, DOMESTIC HOT WATER, DOMESTIC HOT WATER RETURN (COPPER PIPE):

A. BALL VALVES:
1. Domestic water piping 3” and smaller: 400 psig (2757.90 kPa) WOG @ 250ºF bronze construction, threaded or solder ends, bubble tight mineral filled. PTFE seat at 250 psig (1723.69 kPa) under water, low lead compliant. Operate with flow in either direction. Lever or tee handle as required. Suitable for tight shut-off. Domestic manufactured only.
2. Uses: Isolation valves for domestic water and gas services. Drain valves shall be furnished with a capped ¾” threaded hose outlet connection with chain on cap connected to valve body.
3. Approved Manufacturers:
   a. Apollo 70-140LF or 70-240LF
   b. Milwaukee
   c. Hammond
   d. Nibco.
   e. Watts

B. SWING CHECK VALVES:
1. 2" and Smaller: Crane No. 37 bronze, threaded, Y-pattern, 200# WOG at swing check valve.
2. 2-1/2" and Larger: Crane No. 373, iron body, flanged, 200# WOG swing check valve with bronze trim.

C. BALANCING VALVES: Bell and Gossett circuit setter plus or Armstrong CB circuit balancing valve with pressure taps or Flowset. Gate valves, Ball valves or butterfly valves may not be used as balancing valves. Provide schedule showing pressure drop and flow rate of each valve.

D. THERMOSTATIC MIXING VALVES:
1. (MV-1) Lavatory Mixing Valve:
   a. Maintain and limit hot water to desired selectable temperature between 80 and 120 degrees Fahrenheit (48.89 degrees Celsius), flow rates between .25 and 2.25 gpm,

ASSE 1070 Standard, for single fixture applications, lead free construction.

2. (MV-2) Emergency Eye Wash:
   a. Tempering valve to blend hot and cold water, flow capacity of .5 to 6 gpm, valve to be used in single installation applications, temperature limit set to 90 degrees Fahrenheit (32.22 degrees Celsius), fail safe valve to deliver 4 gpm of cold water at 30 psi (206.84 kPa). ASSE Z358.1 standard.

2.04 MISCELLANEOUS VALVES AND SPECIALTIES:

A. GAUGE VALVES: Crane #88 bronze needle valve or Trerice barstock needle valve, or ball valve.
   1. Pressure Reducing Valves for Water Services –Sizes 2 Inches and Smaller
      a. Brass body construction with bronze working parts, Diaphragm operated with anti-siphon check valve and inlet strainer having Monel or stainless steel screen, Built-in thermal expansion bypass check valve, Lead free.

APPROVED MANUFACTURERS AND MODELS:

AW CASH

CASHCO

WATTS SERIES U5B

WILKINS

BELL & GOSSETT

REDUCED PRESSURE ZONE ASSEMBLIES

ASSEMBLY SHALL CONSIST OF AN INTERNAL PRESSURE DIFFERENTIAL RELIEF VALVE LOCATED IN A ZONE BETWEEN TWO POSITIVE SEATING CHECK MODULES WITH CAPTURED SPRINGS AND SILICONE SEAT DISCS, SINGLE ACCESS BRONZE COVER SECURED WITH STAINLESS STEEL BOLTS, INCLUDE TWO RESILIENT SEATED ISOLATION VALVES, FOUR RESILIENT SEATED TEST COCKS AND AN AIR GAP DRAIN FITTING, ASSEMBLY SHALL MEET THE REQUIREMENTS OF USC; ASSE STD. 1013

APPROVED MANUFACTURERS AND MODELS:

WATTS SERIES 009

PART III - INSTALLATION

13.01 VALVE INSTALLATION:

A. Locate all valves in locations which will allow easy operation and facilitates maintenance.

B. Install valves with stems on horizontal or above.

C. Provide chain operators for any valves located more than 8 feet (243.84 cm) above finished floor. This means double acting lever handles for quarter turn valves, or chain wheels for multi-turn valves. Arrange valves and set up chain length for proper operation.

D. All branch lines which supply a specific area of the building (such as a toilet room or kitchen) shall be valved near the main so that each area may be isolated from the system for repairs without having to shut down both men and women's restrooms, other labs, or the whole building.

E. All valves located above a non-lay-in type ceiling or behind a wall shall be made accessible by means of an access door.

END OF SECTION 220523

This page intentionally left blank

SECTION 220529
– HANGERS AND SUPPORTS FOR PLUMBING PIPING AND EQUIPMENT

PART I - GENERAL

1.01 RELATED DOCUMENTS:

A. Drawings and general provisions of Contract, including General and Supplementary Conditions and Division 011 Specification sections, apply to work of this section.

B. This section is Division 22 Plumbing section, and is part of each Division 22 section making reference to supports and anchors specified herein.

1.02 SUMMARY:

A. Extent of supports and anchors required by this section is indicated on drawings and/or specified in other Division 22 sections.

B. Types of supports and anchors specified in this section include the following:
   1. Horizontal-Piping Hangers and Supports.
   2. Vertical-Piping Clamps.
   3. Hanger-Rod Attachments.
   4. Building Attachments.
   5. Saddles and Shields.
   6. Miscellaneous Materials.
   7. Roof Equipment Supports.
   8. Anchors.

C. Relate this section to Section 220548 regarding seismic and vibration control.

1.03 QUALITY ASSURANCE:

A. MANUFACTURER'S QUALIFICATIONS: Firms regularly engaged in manufacture of supports and anchors, of types and sizes required, whose products have been in satisfactory use in similar service for not less than 5 years.

1.04 SUBMITTALS:

A. PRODUCT DATA: Submit manufacturer's technical product data, including installation instructions for each type of support and anchor.

B. SHOP DRAWINGS:
   1. Submit manufacturer's assembly-type shop drawings for each type of support and anchor, indicating dimensions, weights, required clearances, and methods of assembly of components.

C. MAINTENANCE DATA: Submit maintenance data and parts list for each type of support and anchor. Include this data, product data, and shop drawings in maintenance manual; in accordance with requirements of Division 01.

1.05 REFERENCES:

A. CODES AND STANDARDS:
   1. Code Compliance: Comply with applicable building, mechanical and plumbing codes pertaining to product materials and installation of supports and anchors.
   2. UL and FM Compliance: Provide products which are UL-listed and FM approved.
   3. MSS Standard Compliance:
      a. Provide pipe hangers and supports of which materials, design, and manufacture comply with MSS SP-58.
      b. Select and apply pipe hangers and supports, complying with MSS SP-69.
      c. Fabricate and install pipe hangers and supports, complying with MSS SP-89.
      d. Terminology used in this section is defined in MSS SP-90.

PART II - PRODUCTS

2.01 HORIZONTAL-PIPING HANGERS AND SUPPORTS:

A. GENERAL: Except as otherwise indicated, provide factory- fabricated horizontal piping hangers and supports complying with MSS SP-58, of one of the following MSS types listed, selected by Installer to suit horizontal-piping systems, in accordance with MSS SP-69 and manufacturer's published product information. Use only one type by one manufacturer for each piping service. Select size of hangers and supports to exactly fit pipe size for bare piping, and to exactly fit around piping insulation with saddle or shield for insulated piping. Provide copper-plated hangers and supports for copper-piping systems.

B. ADJUSTABLE STEEL CLEVISES HANGERS: MSS Type 1. (For suspension of non-insulated or insulated stationary pipe lines; 1/2" to 30".)

C. STEEL DOUBLE BOLT PIPE CLAMPS: MSS Type 3. (For suspension of pipe requiring up to 4" of insulation and where flexibility of clamp is desirable; 3/4" to 24".)

D. STEEL PIPE CLAMPS: MSS Type 4. (For suspension of cold pipe lines or hot lines where little or no insulation is required; 1/2" to 24".)

E. PIPE HANGERS: MSS Type 5. (For suspension of piping when off-center closure allowing installation of hanger before erection of piping is desired; 1/2" to 4".)

F. ADJUSTABLE SWIVEL PIPE RINGS: MSS Type 6. (For suspension of non-insulated stationary pipe lines; 3/4" to 8".)

G. ADJUSTABLE STEEL BAND HANGERS: MSS Type 7. (For suspension of non-insulated stationary pipe lines; 3/4" to 8".)

H. ADJUSTABLE BAND HANGERS: MSS Type 9. (For suspension of non-insulated stationary pipe liens; 1/2" to 8".)

I. ADJUSTABLE SWIVEL RINGS, BAND TYPE: MSS Type 10. (For suspension of non-insulated stationary pipe lines; 3/8" to 8".)

J. SPLIT PIPE RINGS: MSS Type 11. (For suspension of non-insulated stationary pipe lines; 3/8" to 3".)

K. EXTENSION SPLIT PIPE CLAMPS: MSS Type 12. (For suspension of non-insulated stationary pipe lines; 3/8" to 3".)

L. U-BOLTS: MSS Type 24. (For support of heavy loads; 1/2" to 30".)

M. CLIPS: MSS Type 26. (For support of uninsulated piping not subject to expansion or contraction.)

2.02 VERTICAL-PIPING CLAMPS:

A. GENERAL: Except as otherwise indicated, provide factory- fabricated vertical-piping clamps complying with MSS SP-58, of one of the following types listed, selected by Installer to suit vertical piping systems, in accordance with MSS SP-69 and manufacturer's published product information. Select size of vertical piping clamps to exactly fit pipe size of bare pipe. Provide copper-plated clamps for copper-piping systems.

B. TWO-BOLT RISER CLAMPS: MSS Type 8. (For support and steadying of pipe risers; 3/4" to 20". Also supports pipe covering or insulation.)

2.03 HANGER-ROD ATTACHMENTS:

A. GENERAL: Except as otherwise indicated, provide factory- fabricated hanger-rod attachments complying with MSS SP-58, of one of the following MSS types listed, selected by Installer to suit horizontal-piping hangers and building attachments, in accordance with MSS SP-69 and manufacturer's published product information. Use only one type by one manufacturer for each piping service. Select size of hanger-rod attachments to suit hanger rods. Provide copper-plated hanger-rod attachments for copper-piping systems.

B. STEEL TURNBUCKLES: MSS Type 13. (For adjustment up to 6" for heavy loads.)

C. STEEL CLEVISES: MSS Type 14. (For use on high temperature piping installations.)

D. SWIVEL TURNBUCKLES: MSS Type 15. (For use with split pipe rings, MSS type 11.)

E. MALLEABLE IRON SOCKETS: MSS Type 16. (For attaching hanger rod to various types of building attachments.)

2.04 BUILDING ATTACHMENTS:

A. GENERAL: Except as otherwise indicated, provide factory- fabricated building attachments complying with MSS SP-58, of one of the following MSS types listed, selected by Installer to suit building substrate conditions, in accordance with MSS SP-69 and manufacturer's published product information. Select size of building attachments to suit hanger rods. Provide copper-plated building attachments for copper-piping systems.

B. CONCRETE INSERTS: MSS Type 18. (For upper attachment for suspending pipe hangers from concrete ceiling.)

C. TOP BEAM C-CLAMP: MSS Type 19. (Use under roof installations with bar joist construction, for attachment to top flange of structural shape.)

D. SIDE BEAM OR CHANNEL CLAMPS: MSS Type 20. (For attachment to bottom flange of beams, channels, or angles.)

E. CENTER BEAM CLAMPS: MSS Type 21. (For attachment to center of bottom flange of beams)

F. C-CLAMPS: MS Type 23. (For attachment to structural shapes.)

G. TOP BEAM CLAMPS: MSS Type 25. (For attachment to top of beams when hanger rod is required tangent to edge of flange.)

H. SIDE BEAM CLAMPS: MSS Type 27. (For attachment to bottom of steel I-beams.)

I. STEEL BEAM CLAMPS W/EYE NUT: MSS Type 28. (Same as Type 28 with link extensions.)

J. LINKED STEEL CLAMPS W/EYE NUT: MSS Type 29. (Same as Type 28 with link extensions.)

K. MALLEABLE BEAM CLAMPS: MSS Type 30. (For attachment to structural steel.)

L. STEEL BRACKETS: One of the following for indicated loading:
   1. Light Duty: MSS Type 31, to 570 pounds.
   2. Medium Duty: MSS Type 32, to 1,500 pounds.
   3. Heavy Duty: MSS Type 33, to 3,000 pounds.

M. SIDE BEAM BRACKETS: MSS Type 34. (For use on sides of steel or wooden beams.)

N. PLATE LUGS: MSS Type 57. (For attachment to steel beams where flexibility at the beam is desired.)

2.05 MANUFACTURERS OF HANGERS AND SUPPORTS:

A. MANUFACTURER: Subject to compliance with requirements, provide hangers and supports of one of the following:
   1. Kin-Line, Inc.
   2. Fee & Mason Mfg. Co.; Div. Figgie International
   3. ITT Grinnel Corp.
   4. B-Line.

2.06 MISCELLANEOUS MATERIALS:

A. METAL FRAMING: Provide products complying with NEMA STD ML 1.

B. STEEL PLATES, SHAPES AND BARS: Provide products complying with ASTM A 36.

C. CEMENT GROUT: Portland cement (ASTM C 150, Type I or Type III) and clean uniformly graded, natural sand (ASTM C 404, Size No. 2). Mix at a ratio of 1.0 part cement to 3.0 parts sand, by volume, with minimum amount of water required for placement and hydration. Use Embeco grout for non-shrink applications.

PART III - EXECUTION

3.01 INSPECTION:

A. Examine areas and conditions under which supports and anchors are to be installed. Do not proceed with work until unsatisfactory conditions have been corrected in manner acceptable to Installer.

3.02 PREPARATION:

A. Proceed with installation of hangers, supports and anchors only after required building structural work has been completed in areas where the work is to be installed. Correct inadequacies including (but not limited to) proper placement of inserts, anchors and other building structural attachments.

B. Prior to installation of hangers, supports, anchors and associated work, Installer shall meet at project site with Contractor, installer of each component of associated work, inspection and testing agency representatives (if any), installers of other work requiring coordination with work of this section and Architect/Engineer for purpose of reviewing material selections and procedures to be followed in performing the work in compliance with requirements specified.

3.03 INSTALLATION OF BUILDING ATTACHMENTS:

A. Install building attachments at required locations within concrete or on structural steel for proper piping support. Space attachments within maximum piping span length indicated in MSS SP-69. Install additional concentrated loads, including valves, flanges, guides, strainers, expansion joints, and at changes in direction of piping. Install concrete inserts before concrete is placed; fasten insert securely to forms. Where concrete with compressive strength less than 2500 psi (17236.90 kPa) is indicated, install reinforcing bars through the openings at the tops of inserts.

3.04 INSTALLATION OF HANGERS AND SUPPORTS:

A. GENERAL: Install hangers, supports, clamps and attachments to rigidly support piping properly from building structure; comply with MSS SP-69 and/or the piping manufacturer. Arrange for grouping of parallel runs of horizontal piping to be supported together on trapeze type hangers where possible. Install supports with maximum spacings complying with MSS SP-69. Where piping of various sizes is to be supported together by trapeze hangers, space hangers for smallest pipe size or install intermediate supports for smaller diameter pipe. Do not use wire or perforated metal to support piping, and do not support piping from other piping.

B. Install hangers and supports complete with necessary inserts, bolts, rods, nuts, washers and other accessories. Except as otherwise indicated for exposed continuous pipe runs, install hangers and supports of same type and style as installed for adjacent similar piping.

C. Prevent electrolysis in support of copper tubing by the use of hangers and supports which are copper plated, or by isolating with foam rubber covering.

D. LOAD DISTRIBUTION: Install hangers and supports so that piping live and dead loading and stresses from movement will not be transmitted to connected equipment.

E. PIPE SLOPES: Install hangers and supports to provide indicated pipe slopes, and so that maximum pipe deflections allowed by ANSI B31 Pressure Piping Codes are not exceeded.

F. INSULATED PIPING: Hangers shall not come in contact with pipe where pipe is specified to be insulated.

G. CLAMPS: Attach clamps, including spacers (if any), to piping with clamps projecting through insulation; do not exceed pipe stresses allowed by ANSI B31.

3.05 ADJUSTING AND CLEANING:

A. HANGER ADJUSTMENT: Adjust hangers so as to distribute loads equally on attachments.

B. SUPPORT ADJUSTMENT: Provide grout under supports so as to bring piping and equipment to proper level and elevations.

C. CLEANING: Clean factory-finished surfaces. Repair any marred or scratched surfaces with manufacturer's touch-up paint.

END OF SECTION 220529

This page intentionally left blank

SECTION 220548
VIBRATION AND SEISMIC CONTROL FOR PLUMBING PIPING AND EQUIPMENT

PART I - GENERAL:

1.01 RELATED DOCUMENTS: DRAWINGS AND GENERAL PROVISIONS OF CONTRACT, INCLUDING GENERAL AND SUPPLEMENTARY CONDITIONS AND DIVISION 01 SPECIFICATION SECTIONS, APPLY TO WORK OF THIS SECTION.

1.02 SUMMARY: FURNISH AND INSTALL COMPLETE SEISMIC RESTRAINT AND VIBRATION CONTROL SYSTEMS FOR ALL WORK INSTALLED UNDER DIVISION 22. WORK TO BE RESPONSIVE TO THE INTENT OF THE INTERNATIONAL BUILDING CODE, LATEST ADOPTED EDITION FOR THE RESPECTIVE SEISMIC ZONE.

QUALITY ASSURANCE:

MANUFACTURERS QUALIFICATIONS: ENGAGE THE SERVICES OF AN INDEPENDENT SEISMIC AND VIBRATION CONTROL SUBCONTRACTOR WHO SHALL HAVE THE TECHNOLOGY, THE EXPERIENCE, COMPUTER CAPABILITIES AND MANUFACTURED PRODUCTS TO PREPARE THE REQUIRED COMPUTATIONS, SHOP DRAWINGS AND SPECIAL DEVICES TO MEET THE MINIMUM REQUIREMENTS DESCRIBED HEREIN.

3.01 THE SEISMIC AND VIBRATION CONTROL SUBCONTRACTOR SHALL VISIT THE SITE DURING CONSTRUCTION AT A MINIMUM OF TWO SPECIFIC PERIODS.

A. When equipment is set in place, prior to placement of seismic restraint devices for the purposes of directing the contractor in properly locating and installing the approved devices.

B. At the completion of the project, prior to final mechanical inspection, for the purpose of verifying the correctness of the seismic restraint and vibration isolation device installation and preparing certification of the seismic vibration-isolation work.

3.02 THE SEISMIC SUBCONTRACTOR SHALL EXERCISE THE QUALITY CONTROL FOR THIS WORK AND SHALL INCLUDE, BUT NOT BE LIMITED TO INSTRUCTIONS DIRECT TO THE PLUMBING (DIVISION 22) CONTRACTOR CONCERNING:

1. Bracing and anchoring of piping.
    a. Provision for expansion and vibration of piping.

3.03 THE SUBCONTRACTOR SHALL BE RESPONSIBLE FOR IDENTIFYING THE NEED FOR THE SIZE AND LOCATION OF STEEL SOLE PLATES AND THEIR ATTACHMENT TO STRUCTURAL STEEL OR CONCRETE.

3.04 THE SUBCONTRACTOR SHALL CERTIFY IN WRITING THAT HE HAS INSPECTED THE INSTALLATION AND THAT ALL ISOLATION, ANCHORS AND SEISMIC RESTRAINT MATERIALS ARE INSTALLED CORRECTLY AND FUNCTIONING PROPERLY. CERTIFICATION SHALL BE PROVIDED AFTER ALL CORRECTIVE WORK HAS BEEN COMPLETED.

3.05 SUBMITTALS: SUBMITTAL DATA IS REQUIRED AND SHALL CONSIST OF COMPUTATIONS, VIBRATION ISOLATION SELECTION, EQUIPMENT ANCHORS, ANCHOR BOLT SIZES, SUPPORTS, SEISMIC RESTRAINTS, SOLE PLATE DATA, RESTRAINT LOCATIONS AND TYPE OF RESTRAINTS.

A. Submittal data shall identify dimensions, load deflection data, center of gravity, standard connections, manufacturer's recommendations, behavior problems including vibrations, thermal expansion, building expansion joints, etc., associated with equipment, ductwork, piping and conduit.

B. Calculations need not be submitted when restraint devices for piping, conduit and ductwork are proposed in accordance with the SMACNA Guidelines for Seismic Restraints.

C. Selection of isolator anchors and restraints shall be clearly made known along with the basis for selection so that proposed systems can be reviewed.

D. Calculations furnished for anchors, anchor bolts, sole plates and other support steel for restraining devices shall be signed and stamped by an engineer licensed in one of the United States.

3.06 REFERENCES:

CODES AND STANDARDS:

4.01 2021 EDITION

4.02 CURRENT EDITION

4.03 UL STANDARD 181

4.04 SEISMIC RESTRAINT MANUAL GUIDELINES FOR

1. Mechanical Systems published by
2. SMACNA

4.05 GUIDELINES FOR SEISMIC RESTRAINT OF MECHANICAL SYSTEMS AND PLUMBING PIPING SYSTEMS. PUBLISHED BY THE SHEET METAL INDUSTRY FUND OF LOS ANGELES, CALIFORNIA, AND THE PLUMBING AND PIPING INDUSTRY COUNCIL, INC., LOS ANGELES, CALIFORNIA.

4.06 SEISMIC VENDORS: MASON, AMBER BOOTH, KINETICS, VIBRO ACOUSTICS.

PART II - PRODUCTS:

5.01 MATERIALS - PRODUCTS: RESTRAINT DEVICES SHALL BE ESPECIALLY DESIGNED TO RESIST SEISMIC FORCES IN ALL DIRECTIONS.

PIPING AND CONDUIT RESTRAINTS: RESTRAINT MATERIALS FOR EXPOSED INSTALLATION SHALL BE STANDARD FABRICATED FLAT STEEL, ANGLE ROD AND CHANNEL MEMBERS. RESTRAINT MEMBERS SHALL BE BOLT CONNECTED. CABLING MATERIALS AND METHODS SHALL BE USED ONLY IN CHASES OR CONCEALED CEILING SPACES.

PART III - EXECUTION

7.01 SEISMIC RESTRAINT GUIDELINE:

A. Guidelines for SMACNA seismic restraints for conduit, piping and ductwork are to serve as the basis for restraint methods.

7.02 SEISMIC RESTRAINT-PIPING AND CONDUIT:

GENERAL: ALL PIPING AND CONDUIT SHALL BE PROTECTED IN ALL PLANES BY RESTRAINTS, DESIGNED TO ACCOMMODATE THERMAL MOVEMENT AS WELL AS RESTRAIN SEISMIC MOTION. TANKS AND VESSELS CONNECTED TO PIPING SHALL BE RESTRAINED IN THE SAME MANNER AS THE PIPING.

LOCATIONS OF THE RESTRAINTS SHALL INCLUDE, BUT NOT BE LIMITED TO:

A. At all drops or risers to equipment connections.
   1. At all changes in direction of piping and conduit.
B. At all horizontal runs of pipe and conduit to keep it in alignment and prevent sagging with restraints not to exceed the following:
   1. Transverse bracing at 40'-0" O.C. maximum.
   2. Longitudinal bracing at 80'-0" O.C. maximum.
C. Provide flexibility in joints where pipes pass through building seismic or expansion joints.
D. On both sides of flexible connectors.

EXCEPTIONS:

A. Conduit under 2-1/2" size and piping under 1-1/2" size need not be additionally seismically restrained except as follows:
   1. Brace all piping and conduit 1-1/4" and larger in boiler rooms, mechanical rooms, electrical equipment rooms and refrigeration machinery rooms.

2. Brace all fuel gas and oil piping, medical gas piping and compressed air piping 1" and larger.

B. Seismic bracing may be omitted:
1. When the top of the pipe is suspended 12" or less from the supporting structure member and the pipe or conduit is suspended by an individual hanger.
2. On all piping 3/4" and smaller.

10.02 SEISMIC RESTRAINT INSULATED PIPING: WHERE PIPING IS DESIGNATED TO BE INSULATED, THE POINTS OF SUPPORT SHALL BE PROTECTED BY A 360O SHEET METAL SHIELD. INSERT INSULATION SHALL BE OF THE SAME THICKNESS AS THE ADJOINING PIPE INSULATION. (PIPE SHIELDS, INC.)

A. The sheet metal shield wrapped around the insert shall be of the following lengths and gauge thickness.

SHIELD LENGTH MINIMUM GAUGE

4" 20

6" 20

9" 16

12" 16

18" 16

16.01 VIBRATION ISOLATION - PIPING:

A. Furnish and install devices to isolate all piping from other moving equipment. Provide flex connections, spring hangers, grooved joint couplings for pipe, etc., as required.

END OF SECTION 220548

This page intentionally left blank

SECTION 220553
– IDENTIFICATION FOR PLUMBING PIPING AND EQUIPMENT

PART I - GENERAL

1.01 RELATED DOCUMENTS:

A. Drawings and general provisions of Contract, including General and Supplementary Conditions and Division-1 Specifications sections, apply to work of this section.

B. Division-22 Plumbing sections apply to work of this section.

1.02 SCOPE OF WORK:

A. All plumbing piping and equipment (excluding thermostats and relays), and distribution systems shall be labeled. Electrical switches and starters for plumbing equipment shall also be labeled.

PART II - GENERAL PLUMBING MATERIALS AND METHODS

2.01 EQUIPMENT, VALVE AND PIPE IDENTIFICATION:

A. Items to be labeled shall include all items of plumbing equipment including pumps, and electrical switches and starters for plumbing equipment and gages.

B. Information to be put on label shall include the following:
   1. Identification number and name. This number and name shall generally be the same as that shown on the plans or in these specifications.
   2. Where the item is a pump, the flow and head shall be indicated and the system served.
   3. If part of a unit, it shall have, in addition to its own number, the number of the main item it is serving.
   4. Valves shall be tagged as to the area served and have their normal operating position indicated.
   5. Where it is apparent which main unit a valve is serving, only the function of the valve need be included on the nameplate.
   6. Type of nameplates shall be as follows:
      a. Valve tags shall be aluminum embossed 3/4" tags with identification on one side for valves. Tags for magnetic starters shall be glued to the metal starter cover. Tags shall be as manufactured by Addressograph Company and shall be Addressograph No. B-5300.
      b. Equipment nameplates shall be black face formica with white engraved lettering 3/16" high or larger.
   7. Methods of attaching labels shall be as follows:
      a. Valve tags to be connected to valve stem by steel rings or chains.
      b. Screws for equipment labels.
   8. Example of typical nameplate series:
      a. Pump nameplate for above unit:
         1) “DCW PUMP NO. 1
         2) SERVES BLDG HOT WATER
         3) 3 GPM - 15 FT.”
      b. Switch nameplate for above pump:
         1) “DISCONNECT - DCP 1"
      c. Sample nameplate for valve where it is apparent what valve is serving:
         1) “DOM. COLD WATER TO ROOMS 120 - N.O.”
   9. NOTE: Above are samples and do not necessarily apply to actual conditions. Room numbers shall be as assigned by Owner to actual conditions.

C. Identification of Piping:
   1. All piping shall be painted under general painting section of this specification and be identified under this section in accordance with the following:
   2. Means of Identification: All piping systems shall be identified according to one of the following schemes:

a. MECHANICAL/FAN ROOM SYSTEMS AND EXPOSED SYSTEMS:
   1) Identifying Legend
   2) Flow Direction Arrow
b. CONCEALED SYSTEMS:
   1) Identifying Legend
   2) Flow Direction Arrow

3. In concealed space, identify at the following interval:
   a. Every 50 feet (1524 cm) interval along continuous runs.
   b. At least once in every room if less than 50 feet (1524 cm)
   c. At each riser or junction.
   d. Above or behind ceiling or wall access doors.
4. Colors: The following colors shall be used in accordance with the pipe identification code hereinafter specified.
   a. Color Coding as follows:
   b. Color Identifying Legend Lettering
   c. Green Cold Water Black
   d. Green Hot Water Black
   e. Lime Hot Water Return Black
   f. Black Drain Water White
   g. Black Waste Water White
   h. Yellow Natural Gas Black
   i. Yellow AR Black
   j. Yellow CO2 Black
5. Identifying Legends: Legends shall be painted or stenciled on pipe over background color in such a location on the pipe as to be readily visible to operating personnel from the floor. Legends must be painted on in black or white as indicated. Self-adhesive or glue-on type labels will not be acceptable.
   a. Letters for identifying legends shall be 2" high for 3" and larger pipe, 1" for 1-1/4" to 2-1/2" pipe and 1/2" for 1" pipe and smaller.
6. Flow Direction Arrows: Arrows to indicate direction of flow inside the pipe shall be painted over the background color in black or white, the same color as the identifying legend and point away from it.
   a. The “shaft” of the arrow shall be 2" long and shall be 1" in width on pipes 3" in diameter or more and 1/2" in width on pipes 2-1/2" in diameter or less. The “head” of the arrow shall be formed by an equilateral triangle having a base equal to twice the width of the “shaft”.
   b. Use double-headed arrow if flow can be in both directions, such as expansion lines.
   c. Identify direction in mechanical rooms not in exposed public ways at walls and every 20 feet (609.6 cm).

2.02 PANEL IDENTIFICATION:

A. All panel devices on panel faces shall have engraved plastic labels.

B. All internal panel components shall have engraved plastic labels. Fasten label beneath each device.

C. All panel wiring and tubing shall be numerically or alphabetically coded.

END OF SECTION 220553

SECTION 220700
PLUMBING INSULATION

PART I - GENERAL

1.01 RELATED DOCUMENTS:

A. Drawings and general provisions of Contract, including General and Supplementary Conditions and Division-1 Specification sections apply to work of this section.

B. Division-22 Section 220000 - Plumbing applies to work of this section.

1.02 SUMMARY:

A. Extent of plumbing insulation required by this section is indicated on drawings and schedules as required by the current Model Energy Code, and by requirements of this section. Use no asbestos in this work.

B. Types of plumbing insulation specified in this section include the following:
   1. Piping Systems Insulation:
      a. Fiberglass.
      b. Flexible Unicellular

C. Refer to Division-22 section "Hangers and Supports for Plumbing Piping and Equipment" for protection saddles, protection shields, and thermal hanger shields.

D. Refer to Division-22 section "Identification for Plumbing Piping and Equipment" for installation of identification devices for piping and equipment.

1.03 QUALITY ASSURANCE:

A. MANUFACTURER'S QUALIFICATIONS: Firms regularly engaged in manufacture of mechanical insulation products, of types and sizes required, whose products have been in satisfactory use in similar service for not less than 3 years.

B. INSTALLER'S QUALIFICATIONS: Firm with at least 5 years successful installation experience on projects with mechanical insulations similar to that required for this project.

C. FLAME/SMOKE RATINGS: Provide composite mechanical insulation (insulation, jackets, coverings, sealers, mastics and adhesives) with flame-spread index of 25 or less, and smoke-developed index of 50 or less, as tested by ASTM E 84 (NFPA 255) method.

1.04 SUBMITTALS:

A. PRODUCT DATA: Submit manufacturer's specifications and installation instructions for each type of mechanical insulation. Submit schedule showing manufacturer's product number, k-value, thickness, and furnished accessories for each plumbing system requiring insulation.

B. MAINTENANCE DATA: Submit maintenance data and replacement material lists for each type of plumbing insulation. Include this data and product data in maintenance manual.

1.05 DELIVERY, STORAGE AND HANDLING:

A. Deliver insulation, coverings, cements, adhesives and coatings to site in containers with manufacturer's stamp or label affixed showing fire hazard ratings of products.

B. Protect insulation against dirt, water and chemical and mechanical damage. Do not install damaged or wet insulation; remove from project site.

PART II - PRODUCTS

2.01 ACCEPTABLE MANUFACTURERS:

A. MANUFACTURER: Subject to compliance with requirements, provide plumbing insulation materials of one of the following (except as noted):
   1. Armstrong World Industries, Inc.
   2. Babcock and Wilcox Co., Insulating Products Div.
   3. CertainTeed Corp.

4. Knauf Fiber Glass GmbH.
5. Manville Products Corp.
6. Owens-Corning Fiberglass Corp.
7. Pittsburgh Corning Corp.
8. Rubatex Corp.
9. Thermacell
10. IMOCA

2.02 PIPING INSULATION MATERIALS:

A. PREFORMED FIBERGLASS PIPING INSULATION: ASTM C 547. (Class 1 for use to 450oF (230oC); Class 2 for use to 650oF (345oC); Class 3 for use to 1200oF (650oC).

B. CELLULAR GLASS PIPING INSULATION: ASTM C 552. (Type I - flat block; Type II - pipe and tubing insulation, Class 1 - regular (uncovered), Class 2 - jacketed; Type III - special shapes; Type IV roof board.

C. JACKETS FOR PIPING INSULATION: All purpose (ASJ) fire retardant jacket, ASTM C 921, Type I for piping with temperatures below ambient, Type II for piping with temperatures above ambient. Type I may be used for all piping at Installers option.

D. Encase pipe fittings insulation with one-piece premolded PVC fitting covers, fastened as per manufacturer's recommendations.

E. Encase exterior fittings insulation and piping with aluminum jacket with weather-proof construction.

F. Staples, Bands, Wires, and Cement: As recommended by insulation manufacturer for applications indicated.

G. Adhesives, Sealers, and Protective Finishes: As recommended by insulation manufacturer for applications indicated.

2.03 PIPING SEALANT THROUGH WALLS: SEE ALSO DIVISION 23 SECTION.

A. Sealant shall be a two-part foamed silicone elastomer equal to Dow Corning 3-6548 Silicone RTV foam. Sealant shall be applied at any piping or duct penetration through fire or smoke walls to prevent air from passing through the opening.

B. Sealant cell structure, foamed in place, shall be U.L. classified and shall meet the smoke development and fuel contribution ratings specified. Sealant shall be stable at extreme temperatures, and shall effectively confine such hazards as fire, smoke and gases.

C. Sealant required at any fire/smoke wall penetration to be according to approved detail for each specific wall assembly. Contractor shall submit detail for engineer approval.

2.04 EXTERIOR DUCT JACKETING:

A. Provide and install jacketing for all domestic piping in mechanical spaces. This in addition to standard foil on Kraft jacketing (ASJ).
   1. Domestic water other insulated piping.
      a. PVC sheets, 0.030" thickness.
         1) PVC formed fitting covers.
         2) Solvent welded joints and seams.
         3) (Provide for removal and expansion.)

B. Color of jacketing selected by Owner.

2.05 FIRE/SMOKE ENCASEMENT:

A. Any and all PVC, PVDF, polypropylene, acid waste and vent and any other plastic piping located in return air plenums shall be encased in rated flame and smoke system. The encasement shall be equal to Firemaster “Plastic Pipe Fire Protection System.” The enclosure shall meet all codes.

PART III - EXECUTION

3.01 GENERAL:

A. Piping insulation shall be fiberglass one-piece performed pipe insulation with all purpose (ASJ) fire retardant jacket.

B. Fittings and valves shall be insulated and covered with Zeston covers.

C. All cold water, roof drains, secondary roof drains or any other lines upon which condensate moisture could form, shall have a vapor-proof jacket.

D. Fire and smoke hazard for a complete insulation system shall not exceed:
   1. Flame spread - 25
   2. Fuel contribution - 50
   3. Smoke development - 50

E. Insulation protection shields equal to Grinnell Figure 167 shall be installed on all insulated pipe 1" and larger. Hangers shall not contact pipe where pipe is specified to be insulated.

3.02 INSPECTION:

A. Examine areas and conditions under which mechanical insulation is to be installed. Do not proceed with work until unsatisfactory conditions have been corrected in manner acceptable to Installer.

3.03 PLUMBING PIPING SYSTEM INSULATION:

A. INSULATION OMITTED: Omit insulation on chrome-plated exposed piping (except for handicapped fixtures), air chambers, unions strainers check valves, balance cocks, flow regulators, drain lines from water coolers, drainage piping located in crawl spaces or tunnels, fire protection piping, and pre-insulated equipment.

B. COLD PIPING:
   1. Application Requirements: Insulate the following cold plumbing piping systems:
   2. Potable cold water piping
   3. Roof drain bodies
   4. Interior above-ground storm water piping, including roof drain, deck drain and secondary roof and deck drain piping.
   5. Plumbing vents within 6 lineal feet of roof or wall outlet.
   6. Insulate each piping system specified above with one of the following types and thicknesses of insulation:
   7. Fiberglass with all service jacket, self sealing lap:
      a. 1" thickness.
   8. Flexible Unicellular: 1/2" thickness.

C. HOT PIPING:
   1. Application Requirements: Insulate the following hot plumbing piping systems:
   2. Potable hot water piping.
   3. Potable hot water recirculating piping.
   4. Hot drain piping (where indicated).
   5. Insulate each piping system specified above with one of the following types and thicknesses of insulation:
   6. Fiberglass with all service jacket, self-sealing lap K factor of .24 to .28 at 100o mean rating temperature; 1" thick for pipe sizes up to and including 2"; 1-1/2" thick for pipe sizes over 2".
   7. Flexible Unicellular: 1/2" thick for pipe sizes up to and including 2" (largest size permitted) with contact cement or heat fused joints.

3.04 INSTALLATION OF PIPING INSULATION:

A. GENERAL: Install insulation products in accordance with the manufacturer's written instructions, and in accordance with recognized industry practices to ensure that insulation

serves its intended purpose.

B. Install insulation on pipe systems subsequent to installation of heat tracing, painting, testing and acceptance of tests.

C. Install insulation materials with smooth and even surfaces. Insulate each continuous run of piping with full-length units of insulation, with a single cut piece to complete the run. Do not use cut pieces or scraps abutting each other.

D. Clean and dry pipe surfaces prior to insulating. Butt insulation joints firmly together to ensure a complete and tight fit over surfaces to be covered.

E. Maintain integrity of vapor-barrier jackets on pipe insulation, and protect to prevent puncture or other damage.

F. Cover valves, fittings and similar items in each piping system with equivalent thickness and composition of insulation as applied to adjoining pipe run. Install factory molded, precut or job fabricated units (at Installer's option) except where specific form or type is indicated.

G. Extend piping insulation without interruption through walls, floors and similar piping penetrations, except where otherwise indicated.

H. Butt pipe insulation against pipe hanger insulation inserts. For hot pipes, apply 3" wide vapor barrier tape or band over the butt joints. For cold piping apply wet coat of vapor barrier lap cement on butt joints and seal joints with 3" wide vapor barrier tape or band.

3.05 PROTECTION AND REPLACEMENT:

A. Replace damaged insulation which cannot be repaired satisfactorily, including units with vapor barrier damage and moisture saturated units.

B. PROTECTION: Insulation Installer shall advise Contractor of required protection for insulation work during construction period to avoid damage and deterioration.

END OF SECTION 220700

SECTION 220800
PLUMBING SYSTEMS COMMISSIONING

PART 1-GENERAL

1.01 RELATED WORK

A. All other sections in Division 21, 23 and 26

1.02 DESCRIPTION

A. The purpose of the commissioning process is to provide the Owner/operator of the facility with an elevated level of assurance that the mechanical and associated electrical Systems have been installed in the prescribed manner and operate within the performance guidelines set in the design intent. The Commissioning Authority shall provide the Owner with an unbiased, objective view of the systems installation, operation, and performance. This process is not to take away or reduce the responsibility of the design professionals or installing contractors to provide a finished product. Commissioning is intended to enhance the quality of system start-up and aid in the orderly transfer of systems to beneficial use by the owner. The Commissioning Authority will be a member of the construction team, cooperating and coordinating all commissioning activities with the design professionals, construction manager, contractors, subcontractors, manufacturers, and equipment suppliers.
   1. SCOPE
   2. The plumbing systems commissioning shall include a demonstration by the Contractor of each equipment control sequence. The commissioning process shall demonstrate that each control sequence (including alarms and lead/lag equipment operations) and the associated test and balance data all correspond with the contract documents and with the final test and balance report. The finalized temperature control software with graphic displays shall be installed and operational (at all required locations) and the final test and balance report shall be provided for review and acceptance by the Owner and the Engineer a minimum of 10 days prior to requesting date(s) for the plumbing systems commissioning. Additionally, the temperature control contractor and the test and balance contractor (along with any other necessary parties) shall complete a 'dry-run commissioning' and shall certify in writing that all equipment is operating in accordance with the finalized written control sequences prior to requesting date(s) for the actual official on-site plumbing systems commissioning session(s).

B. The plumbing systems commissioning shall demonstrate that the quantities read and displayed by the control system are in agreement with actual' tested quantities (e.g.. variable air volume box cfm readings. minimum outside air cfm readings. air temperatures. water temperatures. duct static pressures, building static pressures, etc.). The plumbing systems commissioning shall also demonstrate that all quantities listed in the final test and balance report (cfm readings. gpm readings. temperature differences, pressure drops. etc.) are/were correctly reported.

C. The Contractor shall schedule a pre-commissioning pre-balancing meeting with the Owner's representatives at least two weeks prior to beginning the testing and balancing. This meeting will be utilized to review and discuss the finalized control sequences and to verify specific testing and balancing
   1. requirements. The final approved temperature control sequences will be distributed and reviewed during this meeting. The final control sequences will include additional detail and/or modifications to the original sequences contained in the contract documents (since such details are commonly omitted from the Mechanical Engineer's original written control sequences and are developed after the equipment submittals and the temperature control system submittals are received). The work associated with those additions and or modifications shall be provided by the temperature control contractor and the test and balance contractor at no additional cost to the Owner.

D. The Contractor shall furnish a set of two-way radios which will be utilized to expedite the commissioning process (typically a minimum of 3 fully charged radios will be necessary and

required for the duration of the commissioning process).

E. The demonstration of each control sequence shall be performed under conditions which simulate as close to an actual condition as possible. The Contractor shall provide all necessary materials and temporary system modifications as required to 'false-load' the system(s) as required to demonstrate the desired sequences (including appropriate gas required to simulate a refrigerant leak in the chiller room when applicable). The temperature control system software shall be capable of temporarily overriding analog inputs in order to facilitate demonstration of the temperature control sequences. In cases where the project does not include an on-site computer in the building being commissioned the temperature control contractor shall provide a laptop computer equipped with the complete graphic interface software package (the software on the laptop computer shall be identical with the software provided to the Owner).

F. Plumbing systems commissioning shall be conducted with representatives from the following entities (the required participants shall be confirmed with the commissioning agent prior to scheduling the commissioning).
   1. General Contractor (with a complete set of asbuilt plans and specifications).
   2. Mechanical Contractor (with a complete set of mechanical equipment operating and maintenance manuals that include a full set of submittals).
   3. Temperature Control Contractor (with a laptop computer loaded with the finalized programming and graphic interface software including asbuilt drawing).
   4. Test and Balance Contractor (with a complete set of testing apparatus as utilized during testing and balancing and a complete copy of the final test & balance report).
   5. Factory-authorized technicians for all major equipment (chillers, boilers, cooling towers, variable frequency drives, pumps, etc.). Technicians shall be available to verify equipment start-up has been properly completed and to make any necessary or desired adjustments to control settings.
   6. Water Treatment Contractor (with copies of final water treatment reports).
   7. Mechanical Engineer and or his designated representative.
   8. The elcetrical contractor (with complete electrical as-built drawings).
   9. Owner’s designated representative.

G. The aforementioned representatives shall be present during all portions of the testing (and re-testing as required) and shall be equipped to promptly remedy any deficiencies discovered during the commissioning process.

H. The temperature control contractor and the test and balance contractor (along with any other necessary parties) shall conduct a 'dry-run commissioning' to verify that all of the previously listed commissioning requirements are complete prior to requesting a date for the actualiofficial on-site commissioning session(s).

I. Should any of the aforementioned requirements not be met on the date that the commissioning process commences and or if deficiencies are observed during the commissioning process the commissioning will be considered a failure and the deficiencies will be required to be remedied and then addressed in writing prior to requesting a date for re-commissioning. There will be no additional costs allowed to the Contractor for re-commissioning sessions as may be required to address issues that are found to be in non-compliance with the requirements of this specification.

J. The Contractor shall include adequate time periods for both the 'dry-run commissioning' and the actual official on-site commissioning in the project schedule. The necessary time periods shall be carefully reviewed with all of the appropriate subcontractors to ensure that the subcontractors are in agreement with the time allotted for each scheduled task.

K. Completion and acceptance of the plumbing systems commissioning shall be a condition of Substantial Completion. The building shall be considered 'not ready to utilize for its intended use' until such time that the plumbing systems commissioning is successfully completed.

L. The responsibilities of the General/Managing Contractor shall also include:
   1. Coordinate and manage the Contractors commissioning activities.

2. Coordinate directly with each subcontractor and vendor with respect to their responsibilities and contractual obligations for commissioning.
3. Attend periodic on-site commissioning meetings as required by the Commissioning Authority.
    a. Integrate commissioning schedule into the master construction activity schedule. Update schedule at specified intervals.
4. Conduct installation verification inspections.
5. Review controls documentation and interface with other systems.
    a. Obtain then review operation & maintenance information and as-built drawings provided by the various subcontractors and vendors.
6. Note any inconsistencies or deficiencies in system operations. Enforce system
        1) compliance or recommend to the owner's Representative modifications to system
        2) design that will correct or enhance system performance.
            (a) Coordinate Commissioning Authority in testing & witnessing after verifying that pretests have been satisfactorily conducted and final tests are ready to be
    b. performed.
            (a) Be present during training sessions to direct video recording, present training and direct the presentations of others.
                (1) Be present during start-up activities to direct and witness execution of start-up.
                (2) Monitor performance of testing, adjusting and balancing activities to ensure
                (3) acceptable results and use of approved methods and instrumentation.
                (4) Ensure that necessary test instrumentation is available during verification and functional performance testing, and that instruments meet quality and calibration requirements and are in good working order.
            (b) Be present during verification and functional performance testing and retesting to direct and witness execution of tests.
    c. If a commissioning test fails, determine the cause of failure, direct timely correction of deficiency and then retest. Reimburse the Owner, Design Team &
        1) Commissioning Authority for billed costs (including travel expenses) for the extraordinary participation of the Owners Representative, Architect, Commissioning Authority, or owners staff (Extraordinary Participation shall be defined as any test that has failed more then TWO (2) times and requires Three (3) or more tests).
7. Track commissioning deficiencies until correction and retesting is successfully completed.
    a. The functions and responsibility of the Commissioning Authority shall include:
8. Responsibility: The primary point of responsibility is to inform the Contractor and the Owner on the status, integration, and performance of systems within the facility.
9. Information: The Commissioning Authority shall function as a catalyst and initiator to disseminate information and assist the design and construction teams in the completion of the construction process. This shall include system completeness, performance, and adequacy to meet the intended performance standards of each system. Services include construction observation, spot testing, verification, and functional performance testing, and providing performance and operating information to the responsible parties, e.g., contractors, design professionals, and the Owner.
10. Quality Assurance: Assist the responsible parties to maintain a high-quality level installation and system performance.
11. Observation of tests: Commissioning Authority shall observe and coordinate testing as required to ensure system performance meets the design intent.

12. Documentation of tests: Commissioning Authority shall document the results of the performance testing directly and/or ensure that all testing is documented by the appropriate technicians. The Commissioning Authority shall provide standard forms. to be used by all parties for consistency of approach and type of information to be recorded.
13. Resolution of disputes: The Commissioning Authority is to remain an independent party present on the project with specific knowledge of the subject. Should disputes. arise, the Commissioning Authority shall perform research to determine the scope and extent of the problem and educate the involved parties as to the nature and extent of the problem. This shall include technical and financial aspects of the dispute, including assistance to help identify who the responsible parties are to implement corrective action. The Owner/Architect shall preside over resolution of the problem.
14. Deficiencies: Provision of technical expertise to oversee and verify the correction
    1) of deficiencies found during the commissioning process.
15. Provision of technical expertise to review and edit operating and maintenance descriptions by system.
16. SYSTEMS
17. equipment, piping, balancing, controls, etc. that are defined in the entire cumulative sections of division 21, 22, 23 and 26 will go through commissioning. The below list is a representative sample of items that are typically commissioned:
    a. Mechanical & central plant systems including electrical that connects to mechanical.
18. Variable frequency drives (if applicable).
        (1) ATC control systems, hardware, software, and documentation.
        (2) All Plumbing systems.
19. All mechanical and PLUMBING systems.
    a. All lab equipment, RO system, Lab Water, Lab Gases, and any other system specified in the specifications, contractor documents, and program documents.
20. COORDINATION
21. The Commissioning authority shall receive a copy of all construction documents, addenda, change orders, and appropriate approved submittals and shop drawings directly from the Architect and Contractor.
22. The Commissioning Authority shall disseminate written information and documents to all responsible parties relative to the nature and extent of the communication.
23. The Commissioning Authority is primarily responsible to the Owner, and as such, shall regularly appraise the Architect, the Contractor, and the Owner of progress, pending problems and/or disputes, and shall provide regular status reports on progress with each system. Any potential change in the contractual and/or financial obligations of the owner. Credits, change orders, schedule changes, etc. shall be identified and quantified as soon as possible.
24. The Commissioning Authority shall coordinate the schedule of commissioning activities
    a. with the construction schedule. It is possible that some procedures will be completed before the entire Mechanical system is completed.

1.03 SCHEDULE

1. Commissioning of systems shall proceed per the criteria established, in the specific sections
    a. that follow, with activities to be performed on a timely basis. The Commissioning Authority shall be available to respond promptly to avoid construction delays.
2. Start-up and testing of systems may proceed prior to completion of systems to expedite progress. However, the Commissioning Authority shall not perform testing and verification services that are the primary responsibility of the contractor/vendor in advance of their own testing and verification.
3. Problems observed shall be addressed immediately, responsible parties notified, and actions to correct said deficiencies shall be coordinated in a timely manner.
4. Contractor schedules and scheduling is the responsibility of the Contractor. The Commissioning Authority shall provide commissioning scheduling information to the

contractor for review and planning activities.

5. The following list is a general set of tasks and criteria along with an approximate duration for each task. This list is intended to be utilized as a guideline for creating an appropriate schedule for all of the work related to plumbing systems commissioning. The actual time required for each task will vary depending on the size and complexity of the mechanical systems on the particular project. Determination of the actual time required for each task is the responsibility of the Contractor and shall be developed utilizing thorough review and discussion with all of the involved subcontractors prior to preparing and submitting the proposed schedule. A typical project requires between 4 and 8 weeks from start of test and balance to scheduling the dates for the formal on-site commissioning session(s).
   a. Pre-commissioning/pre-balancing meeting (2 weeks prior to start of testing and balancing).
      (1) Begin testing and balancing (typically a 1 to two week process).
      (2) Print and distribute final test and balance reports (typically a 1 to 2 week process).
6. Temperature control contractor (with participation from test and balance contractor and mechanical contractor as necessary) conducts 'dry-run commissioning' (utilizing the Commissioning 'PLUMBING Systems Commissioning Checklist' as a guide) and tuning all control loops (typically 1 to 2 week process). Note that this task occurs after testing and balancing is complete.
7. Schedule formal on-site plumbing systems commissioning dates (typically a 1 to 3 week process).

1.04 RELATED WORK SPECIFIED ELSEWHERE

1. Commissioning requires support from the contractors. The commissioning process does not relieve any contractors from their obligations to complete all portions of work in a satisfactory manner.

PART 2 - PRODUCTS (NOT USED) PART 3 - EXECUTION

2.01 COMMISSIONING PLAN, SCHEDULE, AND SUBMITTAL PROCESS

A. The Commissioning Authority shall develop and submit a schedule for the commissioning process which is integrated with the construction schedule. Included shall be the required work by all team members (Commissioning Authority, design team, contractors, and the Owner). Overlay with the construction schedule, and include time for test and balance, verification, and functional performance testing.

B. The subcontractor, supplier and manufacturer are responsible to submit with initial submittals a line-by-line submittal compliance document. The compliance document will follow the specification that the submittal is in reference too. The compliance document will have one of the following for each paragraph of the specification: Comply, Exception, or Unable to Comply. With each Exception and Unable to Comply the compliance document will have a detailed explanation.

C. The subcontractor, supplier and manufacturer shall attend a submittal review meeting before any piece of equipment shall be ordered. This meeting will be held and conducted by the Commissioning Authority at a place designated by Commissioning Authority (which typically is the General Contractors Trailer). During this meeting, the CxA, Engineer, and Owner will review the submittal compliance document.

D. The submittals will be marked with Reviewed, Reviewed as Noted, Defer to Engineer, Note, or Revise and Resubmit. Only “Revise and Resubmit” items will have the expectation of a re-submittal. If any item is marked as Revise and Resubmit contractor shall pay all expenses incurred by the CX Authority for the re-review process. This is outlined in section 3.7.
   1. CONSTRUCTION OBSERVATION
      a. This is an additional and separate activity provided by the design team. Construction observation is required as part of the commissioning and coordination process provided by the C/A.
   2. TEST AND BALANCE

a. Air & water balance shall be accomplished by the test and balance firm. The Commissioning Authority shall spot check this work to verify accuracy of results. If spot testing indicates balancing is not in compliance with the contract documents “ALL” mechanical systems may be retested as noted in section 1.2 Scope.

3. VERIFICATION AND FUNCTIONAL PERFORMANCE TEST PROCEDURES
   a. Commissioning Authority shall develop and document the commissioning procedure to be used.
      1) Include a performance checklist and performance test data sheets for each system based on actual system configuration. These procedures shall be reviewed by the appropriate design engineers for technical depth, clarity of documentation and completeness. Emphasis shall be placed on testing procedures that shall determine actual system performance and compliance with the design intent.
   b. Most mechanical equipment requires safety devices to stop and/or prevent operation unless minimum safety standards or conditions are met. These may include adequate oil pressure, proof- of-flow, non-freezing conditions, maximum static pressure, maximum head pressure, etc. The Commissioning Authority shall observe the actual performance of safety shutoffs in a real or closely simulated condition of failure.

E. Systems may include safety devices and components that control a variety of equipment operating as a system. Interlocks may be hard-wired or operate from software. Operation of these interlocks shall be verified by the Commissioning Authority.

F. The Commissioning Authority shall determine the acceptance procedures for each system within MEP divisions as required. The acceptance procedures shall incorporate the commissioning standards and successful testing results as referred to throughout mechanical and electrical specifications.
   1. The temperature control system shall have all I/O (input/output) points individually verified for proper function, calibration, and operation. The Commissioning Authority shall review proposed testing procedures and report formats and observe enough field testing to confirm that all 1/0 points have been properly tested.
   2. All control sequence of operation strategies, alarm generation and reporting shall also be reviewed for proper operation and verified by the Commissioning Authority.
   3. The central workstation graphics, point assignments, alarm messages, and logging functions shall be verified.
   4. A minimum Four (4) weeks of “Clean” trending (no mechanical, software, control loop or Building Management System “BMS” failures) shall be provided on “Any” or “All” BMS systems & points as directed by the C/A. Clean Trending shall be a requirement that is completed prior to Substantial Completion.
   5. Trending shall be submitted in a graphical Microsoft 2007 Format including all data submitted in the excel workbook. Graphs shall be line graphs shown on printable 11 x 17 pages. Graphs shall have included annotations showing compliance with contract documents.
   6. ALL points shall be trended and submitted in the above format and as outlined by the Cx Authority. Contractor shall submit during submittal process what shall be trended per each graph to show functionality.

G. The appropriate contractor and vendor(s) shall be informed of what tests are to be performed and the expected results. Whereas some test results and interpretations may not become evident until the actual tests are performed, all parties shall have a reasonable understanding of the requirements. The Commissioning Plan shall address those requirements and be distributed to all
      1) parties involved with that system.

H. Acceptance procedures shall confirm the performance of systems to the extent of ' the design intent. When a system is accepted, the Owner shall be assured that the system is complete, works as intended, is correctly documented, and operator training has been performed.
   1. PLUMBING SYSTEMS COMMISSIONIG CHECKLIST

2. A.
3. Verify all valves and dampers have been programmed to operate without hunting.
4. Verify programming of vfd's (minimum speed, auto restart, input/output speed calibration, alarm on failure, upward and downward ramp time settings).
5. Verify vav box maximum, minimum, and reheat cfm air flows (random verification).
6. Verify vav box discharge air temperature (in both heating and cooling modes).
7. Verify set-up of all required alarms (review automatic dial or automatic e-mail set-up).
8. Verify set-up of occupancy schedules.
9. Verify set-up of holiday schedules.
10. Verify unoccupied mode operation (damper and valve positions).
11. Verify pump lead/lag programming and alarm display.
12. Verify boiler lead/lag programming and alarm display.
13. Verify chiller lead/lag programming and alarm display.
14. Verify chiller(s) control sequence(s).
15. Verify pump head and gpm (all systems, compare test/ balance report to design).
16. Verify that pump strainers are clean.
17. Verify flow at heating and cooling coils (random verification).
18. Verify location installation of air vents in each closed loop piping system.
19. Verify chiller room emergency shut-down switch locations and operation.
20. Verify chiller room refrigerant leak detection system
21. Verify that mechanical system roof penetrations are properly installed (per roofing
    a. details).
22. Verify that all required spare parts have been provided.
23. Verify duration of water flow at self-closing lavatory faucets.
24. Verify time delay before domestic hot water is available at lavatory faucets.

2.02 FUNCTIONAL PERFORMANCE TESTING - OBSERVATION

A. The functional performance testing shall be done by the Contractor. The Commissioning Authority shall direct and witness these tests. -

B. Tests shall be completed comprehensively and to the extent necessary to enable the Commissioning Authority to assure the Owner and design professional that the systems do perform per the design intent.

2.03 RE-TESTTNG

A. Contractor shall, at no additional cost to the Owner, repeat the complete verification test procedure for each test for which acceptable results are not achieved. Repeat tests until acceptable results are achieved.

B. Contractor shall compensate the Owner for costs incurred as the result of tests review or inspection repeated. This includes the costs for the Commissioning Authority, Design Architect, Design Engineers, and Owner's personnel for billed costs (including travel expenses) for the extraordinary participation of the Owners Representative, Architect, Commissioning Authority, or owner's staff.

C. All retesting, inspection, or review of equipment or re reviewing of startup sheets or re reviewing of test and balance or re reviewing of controls or re-reviewing of submittals shall be billed at an hour of $250 per hour with a minimum of 4 hours billed per session.

2.04 CORRECTION OF DEFICIENCIES

a. Correct functional performance test deficiencies promptly and schedule retest.

B. Corrections during verification or functional performance test are generally prohibited to avoid
   1) consuming the time of personnel waiting for the test but not involved in making the correction. Exceptions will be allowed if the cause of the failure is obvious and corrective action can be completed in less than five minutes. If corrections are made under this exception, the failure shall be noted on the test data form. A new test data form, marked retest, shall be initiated after the correction has been

made. The entire test procedure shall be repeated.

2.05 SOFTWARE DOCUMENT

A. Review detailed software documentation for all DDC control systems. This includes review of vendor documentation, their programming approach and the specific soft-ware routines applied to this project. Discrepancies in programming approaches and/or sequences shall be reported and coordinated in order to provide the Owner with the most appropriate, simple, and straightforward approach to software routines.

2.06 OPERATING AND MAINTENANCE (O&M) MANUALS

A. The Commissioning Authority shall review the draft form of the O&M manuals provided by the Mechanical contractor and the Electrical contractor. The review process shall verify that O&M instructions meet specifications and are included for all equipment furnished by the contractor, and that the instructions and wiring diagrams are specific (edited where necessary) to the actual equipment provide for this project.

B. Published literature shall be specifically oriented to the provided equipment indicating required operation and maintenance procedures, parts lists, assembly/disassembly diagrams, and related information.

C. The contractor shall incorporate the standard technical literature into system specific formats for this facility as designed and as actually installed. The resulting O&M information shall be system specific, concise, to the point, and tailored specifically to this facility. The Commissioning Authority shall review and edit these documents as necessary for final corrections by the contractor.

D. The O&M manual review, and coordination efforts shall be completed prior to Owner training sessions, as these documents are to be utilized in the training sessions.

2.07 TRAINING

A. Schedule and coordinate training sessions for the Owner’s staff for each system. Training shall be in a classroom setting with the appropriate schematics, handouts, and visual/audio training aids on- site with equipment.

B. The Commissioning Authority review agenda, which shall be submitted at least four weeks before training, and shall audit the training sessions.

C. The appropriate installing contractors shall provide training on all the major systems per
    1) specifications, including peculiarities specific to this project.

D. The equipment vendors shall provide training on the specifics of each major equipment item including philosophy, troubleshooting, and repair techniques.
    a. The automatic control vendor shall provide training on the control system per their specification section.

2.08 RECORD DRAWINGS

a. The Commissioning Authority shall review the as-built contract documents to verify incorporation of both design changes and as-built construction details. Discrepancies noted shall be corrected by the appropriate party.

2.09 EXCLUSIONS

A. Responsibility for construction means and methods: The Commissioning Authority is not responsible for construction means, methods, job safety nor any other construction management functions on the job site.

B. Hands-on work by the Commissioning Authority: The contractors shall provide all services requiring tools or the use of tools to start-up, test, adjust, or otherwise bring equipment and systems into a fully operational state. The Commissioning Authority shall coordinate and observe these procedures (and may make minor adjustments) but shall not perform construction or technician services other than verification of testing, adjusting, balancing, and control function.

END OF SECTION 220800

This page intentionally left blank

SECTION 221000
– GENERAL PIPES AND FITTINGS

PART I - GENERAL

1.01 REFERENCE STANDARDS

A. ASME B31.1 - Power Piping; 2022.

B. ASME B31.9 - Building Services Piping; 2020.

1.02 RELATED DOCUMENTS:

A. Drawings and general provisions of Contract, including General and Supplementary Conditions and Division-1 Specification sections, apply to work of this section.

B. This section is Division-22 Basic Plumbing Materials and Methods section, and is part of each Division-22 section making reference to pipes and pipe fittings specified herein.

1.03 SUMMARY:

A. This section is generic in that it describes material and installation required by several other sections of this specification.

B. Types of pipes and pipe fittings specified in this section include the following:
   1. Steel Piping
   2. Copper Piping
   3. Cast-Iron Pressure Piping
   4. Cast-Iron Soil Piping
   5. Miscellaneous Piping Materials/Products.

C. Pipes and pipe fittings furnished as part of factory-fabricated equipment, are specified as part of equipment assembly in other Division-15 sections.

1.04 QUALITY ASSURANCE:

A. MANUFACTURER'S QUALIFICATIONS: Firms regularly engaged in manufacture of pipes and pipe fittings of types and sizes required, whose products have been in satisfactory use in similar service for not less than 5 years.

B. INSTALLER'S QUALIFICATIONS:
   1. Firm with at least three years history of successful experience on projects of similar nature.
   2. Licensed as a firm in the contractor state of origin and in the State of Utah.
   3. Have a publicly registered bonding capacity of sufficient amount to cover this work and all other work in progress by the contractor.
   4. All workmen employed on the project shall carry state licenses as journeyman or apprentice pipe fitters with additional certification for welders.

C. WELDING CERTIFICATION:
   1. Each welder shall have passed a qualification test within the past six months of starting work on the project.
   2. The test shall be in accordance with the ASME Boiler and Pressure Vessel Code, Section IX, "Welding Qualifications", ASME Section VIII, and ANSI 313.
   3. The test report shall certify that the welder is qualified to weld the material to be used at the job site.
   4. Submit three copies of each welder's qualification test report to the Project Manager for approval prior to commencing the work. No welder shall be used on the project until so certified.

1.05 SUBMITTALS:

A. PRODUCT DATA: Submit manufacturer's technical product data, installation instructions, and dimensioned drawings for each type of pipe and pipe fitting. Submit piping schedule showing

manufacturer, pipe or tube weight, fitting type, and joint type for each piping system.

B. WELDING CERTIFICATIONS: Submit reports as required for piping work.

C. BRAZING CERTIFICATIONS: Submit reports as required for piping work.

D. MAINTENANCE DATA: Submit maintenance data and parts lists for each type of mechanical fitting. Include this data, product data, and certifications in maintenance manual; in accordance with requirements of Division 1.

1.06 REFERENCES:

A. CODES AND STANDARDS:
1. Welding: Qualify welding procedures, welders and operators in accordance with ASME B31.1, or ASME B31.9, as applicable, for shop and project site welding of piping work.
2. Brazing: Certify brazing procedures, brazers, and operators in accordance with ASME Boiler and Pressure Vessel Code, Section IX, for shop and job-site brazing of piping work.
3. NSF Labels: Where plastic piping is indicated to transport potable water, provide pipes and pipe fittings bearing approval label by National Sanitation Foundation (NSF).

1.07 DELIVERY, STORAGE, AND HANDLING:

A. Except for concrete, corrugated metal, hub-and-spigot, clay, and similar units of pipe, provide factory-applied plastic end-caps on each length of pipe and tube. Maintain end-caps through shipping, storage and handling as required to prevent pipe-end damage and eliminate dirt and moisture from inside of pipe and tube.

B. Where possible, store pipe and tube inside and protected from weather. Where necessary to store outside, elevate above grade and enclose with durable, waterproof wrapping.

C. Protect flanges and fittings from moisture and dirt by inside storage and enclosure, or by packaging with durable, waterproof wrapping.

PART II - PRODUCTS

2.01 GENERAL:

A. PIPING MATERIALS: Provide pipe and tube of type, joint type, grade, size and weight (wall thickness or Class) indicated for each service. Where type, grade or class is not indicated, provide proper selection as determined by Installer for installation requirements, and comply with governing regulations and industry standards. Use United States (domestic) manufactured pipe only. Do not use foreign made pipe.

B. PIPE/TUBE FITTINGS: Provide factory-fabricated fittings of type, materials, grade, class and pressure rating indicated for each service and pipe size. Provide sizes and types matching pipe, tube, valve or equipment connection in each case. Where not otherwise indicated, comply with governing regulations and industry standards for selections, and with pipe manufacturer's recommendations where applicable. Use domestic manufactured fittings only. Do not use foreign manufactured fittings.

2.02 COPPER TUBE AND FITTINGS:

A. COPPER TUBE: ASTM B 88; Type K, L (wall thickness) as indicated for each service; hard-drawn temper, except as otherwise indicated.

B. DWV COPPER TUBE: ASTM B 306.

C. ACR COPPER TUBE: ASTM B 280.

D. CAST-COPPER SOLDER-JOINT FITTINGS: ANSI B16.18.

E. WROUGHT-COPPER SOLDER-JOINT FITTINGS: ANSI B16.22.

F. CAST-COPPER SOLDER-JOINT DRAINAGE FITTINGS: ANSI B16.23.

G. WROUGHT-COPPER SOLDER-JOINT DRAINAGE FITTINGS: ANSI B16.29.

H. CAST-COPPER FLARED TUBE FITTINGS: ANSI B16.26.

I. BRONZE PIPE FLANGES/FITTINGS: ANSI B16.24.

J. COPPER-TUBE UNIONS: Provide standard products recommended by manufacturer for use in service indicated.

2.03 CAST-IRON SOIL PIPES AND PIPE FITTINGS:

A. HUBLESS CAST-IRON SOIL PIPE: FS WW-P-401.

B. CAST-IRON HUB-AND-SPIGOT SOIL PIPE: ASTM A 74.

C. HUBLESS CAST-IRON SOIL PIPE FITTINGS: Neoprene gasket complying with ASTM C 564 and stainless steel clamp holding band.

D. CAST-IRON HUB-AND-SPIGOT SOIL PIPE FITTINGS: Match soil pipe units; complying with same standards (ASTM A 74).

E. COMPRESSION GASKETS: ASTM C 564.

F. LEAD/OAKUM JOINT MATERIALS: Provide products complying with governing regulations for use in service indicated.

2.04 MISCELLANEOUS PIPING MATERIALS/PRODUCTS:

A. WELDING MATERIALS: Except as otherwise indicated, provide welding materials as determined by Installer to comply with installation requirements.
   1. Comply with Section II, Part C, ASME Boiler and Pressure Vessel Code for welding materials.

B. SOLDERING MATERIALS: Except as otherwise indicated, provide soldering materials as determined by Installer to comply with installation requirements. Use no lead bearing solders in domestic water applications.
   1. Tin-Antimony Solder: ASTM B 32, Grade 95TA.
   2. Silver-Lead Solder: ASTM B 32, Grade 96TS.

C. BRAZING MATERIALS: Except as otherwise indicated, provide brazing materials as determined by Installer to comply with installation requirements.
   1. Comply with SFA-5.8, Section II, ASME Boiler and Pressure Vessel Code for brazing filler metal materials.

D. GASKETS FOR FLANGED JOINTS: ANSI B16.21; full-faced for cast-iron flanges; raised-face for steel flanges, unless otherwise indicated.

E. PIPING CONNECTORS FOR DISSIMILAR NON-PRESSURE PIPE: Elastomeric annular ring insert, or elastomeric flexible coupling secured at each end with stainless steel clamps, sized for exact fit to pipe ends and subject to approval by plumbing code.
   1. MANUFACTURER: Subject to compliance with requirements, provide piping connectors of the following:
   2. Fernco, Inc.

2.05 STRAINERS:

A. Y pattern, self cleaning, line size. Armstrong, Bailey, Crane, Fisher, Mueller, Sarco, Strong, or Yarway.
   1. Iron Body, Screwed Ends 2" and Smaller: 250 psig (1723.69 kPa) at 425oF, screen mesh to suit service.
   2. Flanged Iron Body 2-1/2" and Larger: 125 psig (861.84 kPa) steam pressure rating, screen mesh to suit service.

B. Basket pattern, quick release lid. Mueller #155 to 30 psi (206.84 kPa), Mueller #165 to 125 psi (861.84 kPa).

2.06 FLOOR, WALL AND CEILING PLATES (ESCUTCHEONS): WHERE EXPOSED PIPES PASS THROUGH FLOORS, FINISHED WALLS OR FINISHED CEILINGS, THEY SHALL BE FITTED WITH CHROMIUM PLATED CAST BRASS FLANGES WITH SET SCREWS. PLATES SHALL BE LARGE ENOUGH TO COMPLETELY CLOSE THE HOLE AROUND THE PIPE, AND SHALL BE NOT LESS THAN 1-1/2" NOR MORE THAN 2-1/2" LARGER THAN THE DIAMETER OF THE PIPES OR INSULATION. ALL PLATES SHALL BE SECURELY HELD IN PLACE.

2.07 PROTECTIVE COATINGS: ALL UNDERGROUND STEEL PIPES SHALL BE WRAPPED WITH SCOTCHWRAP NO. 50 TAPE TO GIVE NOT LESS THAN TWO COMPLETE LAYERS ON THE UNDERGROUND PIPING SYSTEM, OR PIPING SHALL HAVE "X-TRU COAT", FACTORY APPLIED PLASTIC PROTECTIVE COVERING, OR PIPE SHALL BE COATED AND WRAPPED WITH COAL TAR ENAMEL AND KRAFT PAPER, ALL WITH COATED AND TAPED JOINTS.

2.08 DIELECTRIC/INSULATING FITTINGS: INSULATING FITTINGS SHALL BE USED TO CONNECT DISSIMILAR METALS (SUCH AS STEEL AND COPPER) TO PREVENT ELECTROLYTIC ACTION. INSULATING FITTINGS ARE NOT REQUIRED BETWEEN BRONZE VALVES AND STEEL PIPE OR BETWEEN COPPER COIL HEADERS AND STEEL PIPE.

2.09 FLEXIBLE CONNECTIONS: AT PUMPS AND AT ALL ROTATING OR VIBRATING PIECES OF EQUIPMENT, PROVIDE FLEXIBLE CONNECTORS TO ACCOMMODATE ALIGNMENT AND VIBRATION. A GENERAL APPROPRIATE CONNECTOR IS HYSPAN SERIES 4500 FLEXIBLE METAL WITH CORRUGATED STAINLESS STEEL INNER CORE AND BRAIDED WRAP. FLEXIBLE CONNECTIONS SHALL BE FULL LINE SIZE. A SERIES OF THREE VICTAULIC COUPLINGS MAY BE USED FOR WATER SERVICE.

PART III - EXECUTION

3.01 INSTALLATION:

A. GENERAL: Install pipes and pipe fittings in accordance with recognized industry practices which will achieve permanently- leakproof piping systems, capable of performing each indicated service without piping failure. Install each run with minimum joints and couplings, but with adequate and accessible union, flanges, etc., for disassembly and maintenance/replacement of valves and equipment. Reduce sizes (where indicated) by use of reducing fittings. Align piping accurately at connections, within 1/16" misalignment tolerance. Do not cold spring. Store filler weld materials in accordance with codes.
   1. Comply with ANSI B31 Code for Pressure Piping.

B. Locate piping runs, except as otherwise indicated, vertically and horizontally (pitched to drain) and avoid diagonal runs wherever possible. Orient horizontal runs parallel with walls and column lines. Locate runs as shown or described by diagrams, details and notations or, if not otherwise indicated, run piping in shortest route which does not obstruct usable space or block access for servicing building and its equipment. Hold piping close to walls, overhead construction, columns and other clearance to 1/2" where furring is shown for enclosure or concealment of piping, but allow for insulation thickness, if any. Where possible, locate insulated piping for 1" clearance outside insulation. Wherever possible in finished and occupied spaces, conceal piping from view, by locating in column enclosures, in hollow wall construction or above suspended ceilings; do not encase horizontal runs in solid partitions, except as indicated. Provide high point vents, low point drains with valves and extension to drain for all piping.

C. All piping in mechanical rooms, fan rooms, etc., shall be exposed. Do not conceal or imbed piping in walls, floors or other structures.

D. Make changes in direction or size with manufactured fittings. Anchor and support piping for free expansion and movement without damage to piping, equipment or to building.

E. Piping shall be arranged to maintain head room and keep passageways clear.

F. Provide unions at connections to equipment and elsewhere as required to facilitate maintenance.

G. Run full pipe size through shutoff valves, gas cocks, balancing valves, etc. Change pipe size within three pipe size diameters of final connection to equipment, coils, etc.

H. All piping shall be erected to insure proper draining. Air piping shall pitch down in the direction of flow a minimum of 1" per 40 feet (1219.2 cm). Domestic water, chilled water, heating water, and condenser water shall slope down a minimum of 1" per 40 feet towards the drains. Wet standpipes shall pitch down to fire department connections a minimum of 1" per 40 feet. Refrigerant suction line shall slope a minimum of 1" per 10 feet (304.8 cm) towards compressor. Soil, waste, vent, and roof drain lines shall slope in accordance with requirements of Uniform Plumbing Code.

I. On horizontal straight runs of pipe, use eccentric reducers with straight side on top for water piping.

J. ELECTRICAL EQUIPMENT SPACES: Do not run piping in or through transformer vaults and other electrical or electronic equipment spaces and enclosures or above electrical gear unless authorized and directed. Install drip pan under piping that must be run through electrical spaces.

3.02 PIPING SYSTEM JOINTS:

A. GENERAL: Provide joints of type indicated in each piping system.

B. THREADED: Thread pipe in accordance with ANSI B2.1. Cut threads full and clean using sharp dies. Ream threaded ends to remove burrs and restore full inside diameter. Apply pipe joint compound, or pipe joint tape (Teflon) where recommended by pipe/fitting manufacturer, on male threads at each joint and tighten joint to leave not more than 3 threads exposed.

C. BRAZED: Braze copper tube-and-fitting joints where indicated, in accordance with ASME B31.

D. SOLDERED: Solder copper tube-and-fitting joints where indicated, in accordance with recognized industry practice. Cut tube ends squarely, ream to full inside diameter, and clean outside of tube ends and inside of fittings. Apply solder flux to joint areas of both tubes and fittings. Insert tube full depth into fitting, and solder in manner which will draw solder full depth and circumference of joint. Wipe excess solder from joint before it hardens.

E. WELDED:
   1. Weld pipe joints in accordance with ASME Code for Pressure Piping, B31.
   2. Weld pipe joints in accordance with recognized industry practice and as follows:
      a. Weld pipe joints only when ambient temperature is above 0oF (-18oC) where possible, with minimum pipe preheat to 50oF.
      b. Bevel pipe ends at a 37.5o angle where possible, smooth rough cuts, and clean to remove slag, metal particles and dirt.
      c. Use pipe clamps or tack-weld joints with 1" long welds; 4 welds for pipe sizes to 10", 8 welds for pipe sizes 12" to 20".
      d. Build up welds with stringer-bead pass, followed by hot pass, followed by cover or filler pass. Eliminate valleys at center and edges of each weld. Weld by procedures which will ensure elimination of unsound or unfused metal, cracks, oxidation, blow-holes and non-metallic inclusions.
      e. Do not weld-out piping system imperfections by tack-welding procedures; refabricate to comply with requirements.
      f. At Installer's option, install forged branch-connection fittings wherever branch pipe of size smaller than main pipe is indicated; or install regular "T" fitting.

F. FLANGED JOINTS: Match flanges within piping system, and at connections with valves and equipment. Clean flange faces and install gaskets. Tighten bolts to provide uniform compression of gaskets.

G. HUBLESS CAST-IRON JOINTS: Comply with coupling manufacturer's installation instructions.

3.03 CLEANING, FLUSHING, INSPECTING:

A. GENERAL: Clean exterior surfaces of installed piping systems of superfluous materials, and prepare for application of specified coatings (if any). Flush out piping systems with clean water before proceeding with required tests. Inspect each run of each system for completion of joints, supports and accessory items.
   1. Inspect pressure piping in accordance with procedures of ASME B31.

B. Disinfect water mains and water service piping in accordance with AWWA C601.

C. Flush, clean and treat heating and cooling systems in accordance with Sections chemical treatment. Certify by signature of Contractor and Owner's Representative.

3.04 PIPING TESTS:

A. GENERAL: Provide temporary equipment for testing, including pump and gages. Test piping system before insulation is installed wherever feasible, and remove control devices before testing. Test each natural section of each piping system independently but do not use piping system valves to isolate sections where test pressure exceeds valve pressure rating. Fill each section with water and pressurize for indicated pressure and time.
   1. Required test period is 2 hours.
   2. Test long runs of Schedule 40 pipe at 150 psi (1034.21 kPa), except where fittings are lower Class or pressure rating.
   3. Test each piping system at 150% of operating pressure indicated, but not less than 25 psi (172.37 kPa) test pressure.
   4. Observe each test section for leakage at end of test period. Test fails if leakage is observed or if pressure drop exceeds 5% of test pressure.

B. NOTIFICATIONS: At least 10 working days prior to commencement of required testing, notice shall be submitted for review. Tests shall be made prior to painting insulating or covering of any joints and shall be in accordance with ANSI Code for Pressure Piping.

C. INSPECTIONS: Services of an authorized ASME inspector shall be furnished, not an employee of Contractor, to visually inspect piping while under hydrostatic pressure. Copies of inspection shall be submitted for review. At option of contract, welds not hydrostatically tested may be x-ray tested.

D. Repair piping systems sections which fail required piping test, by disassembly and re-installation, using new materials to extent required to overcome leakage. Do not use chemicals, stop-leak compounds, mastics, or other temporary repair methods.

E. Drain test water from piping systems after testing and repair work has been completed.

F. Test pressure piping in accordance with ANSI B31.

G. Test waste, drain and vent systems in accordance with local plumbing code and these specifications. Repair failed sections by disassembly and reinstallation.

H. If test procedures in other sections differ from the above, comply with more stringent requirements.

END OF SECTION 221000

SECTION 221100
– FACILITY WATER DISTRIBUTION

PART I - GENERAL

1.01 REFERENCE STANDARDS

A. ASME B1.20.1 - Pipe Threads, General Purpose, Inch; 2013 (Reaffirmed 2018).

B. ASME B16.18 - Cast Copper Alloy Solder Joint Pressure Fittings; 2021.

C. ASTM B88 - Standard Specification for Seamless Copper Water Tube; 2022.

D. UL 778 - Standard for Motor-Operated Water Pumps; Current Edition, Including All Revisions.

1.02 RELATED DOCUMENTS:

A. Drawings and general provisions of Contract, including General and Supplementary Conditions and Division-1 Specification sections, apply to work of this section.

1.03 SUMMARY:

A. This Section specifies the water distribution piping system, including potable cold, hot, and re-circulated hot water piping, fittings, and specialties within the building connecting to new equipment.

B. Water Supply Systems:
   1. Domestic Water
   2. Rough-in and Connect

C. Domestic Water Equipment:
   1. Domestic Water Circ. Pumps
   2. Domestic Water Expansion Tank

D. Related Sections:
   1. Separate sections in Division 22 specify Basic Piping Materials and Methods, Hangers and Supports, Expansion Compensation, piping system identification materials and requirements, general duty valves, pipe insulation, water conditioning equipment, domestic hot water heaters and plumbing fixtures and equipment.

1.04 QUALITY ASSURANCE:

A. Manufacturer's Qualifications:
   1. Firms regularly engaged in the manufacture of plumbing piping products and equipment of types, materials and sizes required, whose products have been in service for not less than five years.

B. Installer's Qualifications:
   1. Firm with at least three years history of successful experience on projects of similar nature.
   2. Licensed as a firm in the Contractor state of origin and in the State of Utah.
   3. Have a publicly registered bonding capacity of sufficient amount to cover this work and all other work in progress by the Contractor.
   4. All workmen employed on the project shall carry state licenses as journeyman or apprentice pipe fitters with additional certification for welders.

1.05 SUBMITTALS:

A. Product Data: Submit manufacturer’s technical literature indicating source, brand, type, model, performance characteristics, installation instructions, etc. Color chart for finished surfaces and fixtures.

B. Record Drawings: See Section 220000.

C. Operation And Maintenance Information: Provide information for all equipment including a comprehensive system operating description. See Section 220100.

1.06 REFERENCES:

A. Codes and Standards: Comply with applicable sections, follow recommended practices.
1. State Boiler and Pressure Vessel Regulations
2. ASME Codes for Boilers and Pressure Vessels
3. International Plumbing Code 2021 with Utah State Amendments
4. International Building Code 2021 with Utah State Amendments
5. International Mechanical Code 2021 with Utah State Amendments
6. HI Compliance: Design, manufacture, and install plumbing pumps in accordance with HI "Hydraulic Institute Standards".
7. UL Compliance: Design, manufacture, and install plumbing pumps in accordance with UL 778 "Motor Operated Water Pumps".
8. UL and NEMA Compliance: Provide electric motors and components which are listed and labeled by Underwriters Laboratories and comply with NEMA standards.

1.07 DELIVERY, STORAGE, AND HANDLING:

A. Store pipe in a manner to prevent sagging and bending.

1.08 SEQUENCING AND SCHEDULING:

A. Coordinate the installation of pipe sleeves for foundation wall penetrations.

PART II - PRODUCTS

2.01 MANUFACTURERS:

A. Manufacturer Uniformity: Conform with the requirements specified in Basic Mechanical Requirements, under "Product Options."

2.02 PIPE AND FITTINGS:

A. Copper Domestic Water Pipe: (except below slab/grade)
1. Pipe Sizes 2 1/2" and Smaller: Copper tubing. Conform to ASTM B88, Type L, hard temper, copper tube;
a. Wrought-Copper Solder Type Fittings: ANSI B16.22 streamlined pattern fittings, with soldered joints using 95-5 tin antimony solder or non-lead bearing solders such at "Silvabrite."
b. Press Type Fittings: Copper and copper alloy press fittings conforming to ASME B16.18 or B16.22 and performance criteria of IAPMO PS 117, EPDM sealing elements shall be factory installed, press ends shall have SC (Smart ConnectTM) feature design. Threaded fittings shall conform to ASME B1.20.1. Hangers and supports for press fittings shall comply to MSS-SP-58. Install per manufacturers written instructions and with manufacturers recommended press equipment. Approved Manufacturer: Viega Pro Press, Nibco.
2. Pipe sizes 3" and larger: Conform to ASTM 388, Type L, hard temper, copper pipes; with Victaulic couplings and fittings. Follow manufacturing requirements.
a. Stainless Steel Domestic Water Pipe: (except below slab/grade)
3. Pipe Sizes 6” and smaller (2” being the smallest allowed for this alternate): Stainless steel continuous weld tubing. Conform to ASTM A-312, A-530 and A-999, Type 304 stainless. Fittings: Constructed of Type 304 stainless steel conforming to ASTM B 366, Class WP fittings manufactured to the dimensional requirements of ANSI B 16.9 or ANSI B16.28 with pressure ratings equal to the connecting piping.
a. Domestic Water Pipe Below Slab/Grade:
4. Copper Tube: ASTM B 88 (ASTM B 88M), Type “K”, seamless water tube, annealed temper. Wrap piping with scotch wrap and then cover with 1/2" thick “Therma-cel” continuous. Set wrapped pipe in 3" sand or pea gravel all around.

2.03 VALVES:

A. Ball, butterfly, check, and drain valves are specified in Section 220523 – General-Duty Valves for Plumbing Piping.

PIPING SPECIALTIES:

A. Water Hammer Arresters: Piston type, with type L hard drawn copper casing and low lead C69300 brass piston with dual EPDM gasket, pressure rated for 200 psi (1378.95 kPa) normal operating pressure, tested and certified in accordance with PDI Standard WH-201.
   1. Approved Manufacturers:
      a. PPP Inc.
      b. Sioux Chief
      c. ProFlo

B. Backflow Preventers: Reduced pressure principle assembly consisting of shutoff valves on inlet and outlet, and strainer on inlet. Assemblies shall include test cocks, and pressure-differential relief valve located between two positive seating check valves, and comply with requirements of ASSE Standard 1013. Install line size. Provide and install at all locations required by Code.
   1. Approved Manufacturers:
      a. FEBCO 825Y
      b. Watts 909
      c. Wilkins

C. Strainers: 3" and smaller shall be Watts No. 777, WWP 250 psi (1723.69 kPa) at 210oF, cast bronze body, threaded, solid retainer cap, 20 mesh stainless steel screen (except 3" to have 3/64" perforated screen). 4" and larger shall be cast iron body with electrostatically applied heat, fused epoxy coating on interior and exterior. For use with potable water 1/16 mesh stainless steel screen, flanged end connection, iron retainer cap thread tap for blow off, Class 250.
   1. Approved Manufacturers:
      a. Watts 77F-FDA-250.
      b. Wilkins

D. Pressure Reducing Valves 1-1/2" and Smaller: Bronze body construction integral stainless steel strainer renewable stainless steel seat. High temperature resistant diaphragm. Select proper size for maximum flow rate and inlet and outlet pressures indicated. Comply with ASSE Standard 1003.
   1. Approved Manufacturer:
      a. Watts U5B.
      b. Wilkins

E. Pressure Reducing Valves 2-1/2” and Larger: 250 Class hydraulically operated, single seated, diaphragm actuated, globe pattern, with all internal and external ferrous metal surfaces of main valve body coated with fused epoxy. Diaphragm assembly stem shall be 316 stainless seat shall be easily removed and replaced with out special tools. The diaphragm shall be nylon fabric bonded with Buna N rubber. Pilot valve shall be adjustable direct acting spring located, diaphragm type valve with bronze body stainless steel trim. Select proper size for maximum flow rate and inlet and outlet pressures indicated.
   1. 250 Class hydraulically operated, 18-8 (304L) stainless steel valve body, Viton diaphragm and 18-8 (304L) stainless steel liner retainer. Pilot valve shall be adjustable direct acting spring actuated, diaphragm type valve with bronze body and stainless steel trim. Select proper size for maximum flow rate and inlet and outlet pressures indicated.
      a. Approved Manufacturer:
         1) “Rollseal” by Cla-Val Model 790-01.

3.02 DOMESTIC CIRCULATING PUMPS: (DCP)

A. General: Provide factory-tested pumps, thoroughly cleaned, and painted with one coat of machinery enamel prior to shipment. Type, size, and capacity of each pump is listed in pump schedule. Provide pumps of same type by same manufacturer.

B. Product:

1. Type: Horizontal, oil-lubricated, designed for 125 psi (861.84 kPa) working pressure, 225oF (107oC) continuous water temperature, and specifically designed for quiet operation.
2. Body: Bronze or stainless steel construction.
3. Impeller: Bronze
4. Shaft: Steel, ground and polished, integral thrust collar.
5. Bearings: Two horizontal sleeve bearings designed to circulate oil.
6. Seal: Mechanical, with carbon seal face rotating against ceramic seat.
7. Motor: Non-overloading at any point on pump curve, open, drip-proof, sleeve bearings, quiet operating, rubber mounted construction, built-in thermal overload protection.
8. Coupling: Self-aligning, flexible coupling.
9. Manufacturer: Subject to compliance with requirements, provide in-line recirculation pumps of one of the following:
   a. Bell and Gossett
   b. Armstrong
   c. Grundfoss

3.03 DOMESTIC WATER EXPANSION TANKS:

A. Extent of Work: Furnish and install captive air type shock absorbing expansion tanks as indicated on drawings.

B. Delivery Storage and Handling: Handle carefully. Verify integrity of bladder before activating system.

C. Submittals: Submit shop drawings for review.

D. Materials and Installation:
   1. NSF approved.
   2. ASME stamped for 125 psi (861.84 kPa) working pressure.
   3. Butyl rubber diaphragm, propylene lined reservoir. Welded steel tank.
   4. Air charging valve, threaded water side connection.
   5. Selections based on Amtrol.
   6. Install complete with system isolation and water side drain valves, seismic restraint. Charge air side of tank to system water pressure before connection.

PART III - EXECUTION

4.01 EXAMINATION

A. Verify all dimensions by field measurements. Verify that all water distribution piping may be installed in accordance with pertinent codes and regulations, the original design, and the referenced standards.

B. Examine rough-in requirements for plumbing fixtures and other equipment having water connections to verify actual locations of piping connections prior to installation.

C. Do not proceed until the unsatisfactory conditions have been corrected.

4.02 JOINING PIPES AND FITTINGS:

A. Copper Tubing: Solder joints in accordance with the procedures specified in ANSI B9.1.

4.03 PIPING INSTALLATION:

A. Refer to the separate Division 15 section: Basic Piping Materials and Methods, for general piping installation instructions.

B. General Locations and Arrangements: Drawings (plans, schematics, and diagrams) indicate the general location and arrangement of the piping systems. Location and arrangement of piping layout take into consideration pipe sizing and friction loss, expansion, pump sizing, and other design considerations. So far as practical, install piping as indicated.

C. Install piping level with no pitch.

4.04 INSTALLATION OF VALVES:

A. Installation requirements for general duty valves are specified in a separate section of Division 22.

B. Valves: Install in locations shown on drawings. Provide isolation valves for brand lines and service to all equipment, shown or not.

C. Check Valves: Install swing check valves on discharge side of each pump, and elsewhere as indicated.

D. Hose Bibbs and Wall Hydrants: Install where indicated on drawings with vacuum breaker. Each and every hose bibb or wall hydrant shall have a ball valve located upstream of its individual hose bibb or wall hydrant. Locate ball valve in accessible work space.

4.05 INSTALLATION OF PIPING SPECIALTIES:

A. Install backflow preventers at each connection to mechanical equipment and systems, and in compliance with the plumbing code and authority having jurisdiction. Locate in same room as equipment being connected. Pipe relief outlet without valves, to nearest floor drain. Install each backflow preventer no more than 5'-0" above floor.

B. Install pressure regulating valves with inlet and outlet shutoff valves, and balance cock bypass. Install pressure gage on valve outlet.

4.06 EQUIPMENT CONNECTIONS:

A. Piping Runouts to Fixtures: Provide hot and cold water piping runouts to fixtures of sizes indicated, but in no case smaller than required by Plumbing Code.

B. Mechanical Equipment Connections: Connect hot and cold water piping system to mechanical equipment as indicated. Provide shutoff valve and union for each connection, provide drain valve on drain connection. For connections 2-1/2" and larger, use flanges instead of unions.

4.07 WATER SYSTEM SHOCK ABSORBERS:

A. Equip each hot and cold water connection to a fixture or faucet with a full size vertical air cushion not less than 12" long. In addition to the air cushions, provide stainless steel bellows type shock absorbers for hot and cold water at each fixture group. Zurn "Schocktrol" or Smith, Josam, Wade, size to number of fixtures.

4.08 INSTALLATION OF PUMPS:

A. General: Install plumbing pumps where indicated, in accordance with manufacturer's published installation instructions, complying with recognized industry practices to ensure that plumbing pumps comply with requirements and serve intended purposes.

B. Access: Provide access space around plumbing pumps for service as indicated, but in no case less than that recommended by manufacturer.

C. Support: Install base-mounted pumps on minimum of 4" high concrete base equal or greater than 3 times total weight of pump and motor, with anchor bolts poured in place. Set and level pump, grout under pump base with non-shrink grout.

D. Install in-line pumps, supported from piping system.

E. Support: Refer to Division-22 section "Vibration Control" for support and mounting requirements of plumbing pumps.

F. Electrical Wiring: Install electrical devices furnished by manufacturer but not specified to be factory-mounted. Furnish copy of manufacturer's wiring diagram submittal to Electrical Installer.

1. Verify that electrical wiring installation is in accordance with manufacturer's submittal and installation requirements of Division-16 sections. Do not proceed with equipment start-up until wiring installation is acceptable to equipment installer.

G. Piping Connections: Refer to Division-15 plumbing piping sections. Provide piping, valves, accessories, gauges, supports, and flexible connections as indicated.

4.09 PUMP ADJUSTING AND CLEANING:

A. Alignment: Check alignment, and where necessary, realign shafts of motors and pumps within recommended tolerances by manufacturer, in presence of manufacturer's service representative.

B. Start-Up: Lubricate pumps before start-up. Start-up in accordance with manufacturer's instructions. Comply with Kennecott Utah Copper Standard L63ES for service/cross reference from manufacturers specification to KUC equivalent.

C. Cleaning: Clean factory-finished surfaces. Repair any marred or scratched surfaces with manufacturer's touch-up paint.

4.10 FIELD QUALITY CONTROL:

A. Inspections:
   1. Do not enclose, cover, or put into operation water distribution piping system until it has been inspected and approved by the authority having jurisdiction.
   2. During the progress of the installation, notify the plumbing official having jurisdiction, at least 24 hours prior to the time such inspection must be made. Perform tests specified below in the presence of the plumbing official.

B. Rough-in Inspection: Arrange for inspection of the piping system before concealed or closed-in after system is roughed-in, and prior to setting fixtures.

C. Final Inspection: Arrange for a final inspection by the plumbing official to observe the tests specified below and to insure compliance with the requirements of the plumbing code.

D. Reinspections: Whenever the plumbing official finds that the piping system will not pass the test or inspection, make the required corrections and arrange for reinspection by the plumbing official.

E. Reports: Prepare inspection reports, signed by the plumbing official.

F. Piping System Test:
   1. Test for leaks and defects all new water distribution piping systems and parts of existing systems, which have been altered, extended or repaired. If testing is performed in segments, submit a separate report for each test, complete with a diagram of the portion of the system tested.
   2. Leave uncovered and unconcealed all new, altered, extended, or replaced water distribution piping until it has been tested and approved. Expose all such work for testing, that has been covered or concealed before it has been tested and approved.
   3. Cap and subject the piping system to a static water pressure of 50 psig (344.74 kPa) above the operating pressure without exceeding the pressure rating of the piping system materials. Isolate the test source and allow to stand for a period of 4 hours. Leaks and loss in test pressure constitute defects which must be repaired.
   4. Repair all leaks and defects using new materials and retest system or portion thereof until satisfactory results are obtained.
   5. Prepare reports for all tests and required corrective action.

4.11 ADJUSTING AND CLEANING:

A. Cleaning and Disinfecting:
   1. Purge all new water distribution piping systems prior to use.
   2. Follow AWWA guidelines. Thoroughly sterilize the entire domestic water system with a solution containing not more than 50 parts per million of available chlorine. Introduce the chlorinating materials into the system in a manner approved by the Company's representative. Allow the sterilization solution to remain in the system for a period of 24 hours, during which time, open and close all valves and faucets several times. After sterilization, flush the solution from the system with clean water until the residual chlorine content is not greater than 0.2 parts per million. Water system will not be accepted until a negative bacteriological test is made on water taken from the system. Repeat dosing as

necessary until such negative test is accomplished.

B. Reports:
1. Prepare reports for all purging and disinfecting activities.

4.12 INSTRUCTION OF COMPANY'S PERSONNEL: PARTICIPATE IN SPECIFIED INSTRUCTION. SEE SECTION 220000.

END OF SECTION 221100

This page intentionally left blank

SECTION 221123
- NATURAL GAS PIPING

PART I - GENERAL

1.01 REFERENCE STANDARDS

A. NFPA 54 - National Fuel Gas Code; 2024.

1.02 RELATED DOCUMENTS:

A. Drawings and general provisions of Contract, including General and Supplementary Conditions and Division-1 Specifications sections, apply to work of this section.

B. Division - 22 “General Plumbing Requirements” applies to work of the section.

1.03 DESCRIPTION OF WORK:

1. Extent of natural gas systems work, is indicated on drawings and schedules, and by requirements of this section.
2. Trenching and backfill required in conjunction with gas service piping is specified in applicable Division-22 sections, and is included as work of this section.

QUALITY ASSURANCE:

A. Manufacturer’s Qualifications: Firms regularly engaged in manufacture of natural gas systems products, of types, materials, and sizes required, whose products have been in satisfactory use in similar service for not less than 5 years.

B. Installer’s Qualifications: Firm with at least 3 years of successful installation experience on projects with natural gas systems work similar to that required for project.

C. Codes and Standards:
1. NFPA Compliance: Fabricate and install natural gas systems in accordance with NFPA 54 "National Fuel Gas Code".
2. Utility Compliance: Fabricate and install natural gas systems in accordance with Questar Gas regulations and recommended practice.
3. IFGC Compliance: Fabricate and install natural gas systems in accordance with ICC "International Fuel Gas Code - 2021".

2.02 SUBMITTALS:

1. Product Data: Submit manufacturer's technical product data and installation instructions for natural gas systems materials and products.
2. Record Drawings: At project closeout, submit record drawings of installed natural gas systems piping and products, in accordance with requirements of General Conditions.
3. Maintenance Data: Submit maintenance data and parts lists for natural gas systems materials and products. Include this data, product data, shop drawings, and record drawings in maintenance manual; in accordance with requirements of General Conditions.

PART II - PRODUCTS

3.01 MATERIALS AND PRODUCTS:

A. General: Provide piping materials and factory-fabricated piping products of sizes, types, pressure ratings, and capacities as indicated. Where not indicated, provide proper selection as determined by Installer to comply with installation requirements. Provide materials and products complying with NFPA 54 where applicable, base pressure rating on natural gas piping system maximum design pressures. Provide sizes and types matching piping and equipment connections; provide fittings of materials which match pipe materials use in natural gas systems. Where more than one type of materials or products are indicated, selection is Installer's option.

3.02 BASIC IDENTIFICATION:

A. General: Provide identification complying with Division-23 "Mechanical Identification Accessories" in accordance with the following listing:

1. Building Distribution Piping: Plastic pipe markers.
2. Gas Service: Underground-type plastic line markers.
3. Gas Valves: Plastic valve tags.

3.03 BASIC PIPES AND PIPE FITTINGS:

A. General: Provide pipes and pipe fittings complying with Division-23 "General Pipes and Fittings", in accordance with the following listing:

B. Underground Gas Service Piping:
1. Pipe Sizes ½" Through 12": Thermoplastic (polyethylene) gas pressure pipe, tubing, and fittings complying with ASTM D 2513. Provide anodeless riser.

C. Building Distribution Piping:
1. Pipe Size 2" and Smaller: Black steel pipe; Schedule 40; malleable-iron threaded fittings (exposed), welded fittings and joints (concealed).
2. Pipe Size 2-1/2" and Larger: Black steel pipe; Schedule 40; wrought-steel buttwelding fittings, weld all joints.
3. All 1 pound gas and higher shall be all welded fittings and joints.

3.04 BASIC PIPING SPECIALTIES:

A. General: Provide piping specialties complying with Division-23 "Hydronic Piping and Specialities" for each of the following:
1. Pipe escutcheons.
2. Vandal-proof vent caps.
3. Dielectric unions.
4. Pipe sleeves.
5. Sleeve seals.

3.05 BASIC SUPPORTS AND ANCHORS:

A. General: Provide supports and anchors of the following types as needed. See Division - 23 "Mechanical Supporting Devices."
1. Adjustable swivel pipe rings for horizontal-piping hangers and supports.
2. Two-bolt riser for vertical piping supports.
3. Concrete inserts, C-clamps, and steel brackets for building attachments.

3.06 SPECIAL VALVES:

A. General: Special valves required for natural gas systems include the following types:
1. Gas Cocks:
a. Gas Cocks 2" and Smaller: 150 psi (1034.21 kPa) non-shock WOG, bronze straightway cock, flat or square head, threaded ends.
b. Gas Cocks 2-1/2" and Larger: 125 psi (861.84 kPa) non-shock WOG, iron body bronze mounted, straightway cock, square head, flanged ends.

B. Manufacturer: Subject to compliance with requirements, provide gas cocks of one of the following:
1. DeZurik Corp.
2. Jenkins Bros.
3. Lukenheimer Co.
4. NIBCO, Inc.
5. Powell (The Wm.) Co.
6. Rockwell International; Flow Control Div.

3.07 PRESSURE REGULATING VALVES:

A. General: Provide single stage, steel jacketed, corrosion- resistant gas pressure regulators; with atmospheric vent or vent limiting device, elevation compensator; with threaded ends for 2" and smaller, flanged ends for 2-1/2" and larger; for inlet and outlet gas pressures, specific gravity,

and volume flow indicated.

3.08 NATURAL GAS METER:

1. Provide and installed by Utility Company with all fees paid by the Contractor.

PART III - EXECUTION

4.01 INSPECTION:

A. General: Examine areas and conditions under which natural gas systems materials and products are to be installed. Do not proceed with work until unsatisfactory conditions have been corrected in manner acceptable to Installer.

4.02 INSTALLATION OF BASIC IDENTIFICATION:

A. General: Install mechanical identification in accordance with Division-22 "Identification for Plumbing Piping and Equipment."

4.03 INSTALLATION OF NATURAL GAS PIPING:

A. Use sealants on metal gas piping threads which are chemically resistant to natural gas. Use sealants sparingly, and apply to only male threads of metal joints.

B. Remove cutting and threading burrs before assembling piping.

C. Do not install defective piping or fittings. Do not use pipe with threads which are chipped, stripped or damaged.

D. Plug each gas outlet, including valves, with threaded plug or cap immediately after installation and retain until continuing piping, or equipment connection are completed.

E. Install drip-legs in gas piping where indicated, and where required by code or regulation.

F. Install "Tee" fitting with bottom outlet plugged or capped, at bottom of pipe risers.

G. Use dielectric unions where dissimilar metals are joined together.

H. Install piping with 1/64" per foot (1/8%) downward slope in direction of flow.

I. Install piping parallel to other piping, but maintain minimum of 12" clearance between gas piping and steam or hydronic piping above 200oF (93oC).

J. For piping underground beneath buildings, install in welded conduit. Extend conduit inside and terminate in accessible portion of building and seal. Extend conduit outside minimum of 4" from building, and vent above grade.

K. For piping running through ducts or air plenums, install in welded conduit, ventilated on both ends.

L. For risers running through concrete or asphalt, install through minimum 6" pipe sleeve. Fill annular space with gravel.

M. Install magnesium anodes for underground steel pipe, one 5-lb anode for up to 100' in length and one 5-lb anode for each additional 100'.

N. Install magnesium anodes for each underground steel or malleable- iron fitting, isolated between 2 sections of plastic pipe; one 3- lb anode for each fitting.

4.04 GAS SERVICE:

A. General: Arrange with outside utility contractor to provide gas service branch to indicated location with gas meter set, pressure regulator and shutoff at terminus. Contractor shall coordinate installation and pay all associated fees.

B. Extend service pipe from utility contractor's terminus to inside building wall.

4.05 INSTALLATION OF SUPPORTS AND ANCHORS:

A. Install supports and anchors in accordance with Division-23 "Mechanical Supporting Devices."

4.06 INSTALLATION OF VALVES:

A. Gas Cocks: Provide at connection to gas train for each gas-fired equipment item; and on risers and branches where indicated.

B. Locate gas cocks where easily accessible, and where they will be protected from possible injury.

C. Control Valves: Install as indicated. Refer to Division 26 for wiring; not work of this section.

D. Pressure Regulating Valves: Install as indicated; comply with Utility requirements. Pipe atmospheric vent to outdoors, full size of outlet. Install gas shutoff valve upstream of each pressure regulating valve.

4.07 EQUIPMENT CONNECTIONS:

A. General: Connect gas piping to each gas-fired equipment item, with drip leg and shutoff gas cock. Comply with equipment manufacturer's instructions. Provide with flexible pipe section as required by IFGC.

4.08 FIELD QUALITY CONTROL:

A. Piping Tests: Inspect, test, and purge natural gas systems in accordance with NFPA 54, and local utility requirements.

4.09 ADJUSTING AND CLEANING:

A. Cleaning and Inspecting: Clean and inspect natural gas systems in accordance with requirements of the IFGC.

4.10 SPARE PARTS:

A. Valve Wrenches: Furnish to Owner, with receipt, 2 valve wrenches for each type of gas valve installed, requiring same.

END OF SECTION 221123

SECTION 221300
– FACILITY SANITARY SEWERAGE

PART I - GENERAL

1.01 RELATED DOCUMENTS:

A. Drawings and General provisions of Contract, including General and Supplementary Conditions and Division-1 Specification sections, apply to work of this section.

1.02 SUMMARY:

A. This Section specifies building sanitary, storm drainage and vent, acid waste and vent and equipment, vent and drain piping systems, including drains and drainage specialties.

B. Related Sections:
   1. Separate sections in Division 2 specify sanitary sewage systems and trenching and backfilling. Provide a complete transition between work components.
   2. Separate sections in Division 7 specify flashing and sheet metal and joint sealers.
   3. Division 22 Plumbing section applies to the work of this section.
   4. Separate sections of Division 22 specify Basic Piping Materials and Methods, Hangers and Supports, Expansion Compensation, piping system identification materials and requirements, pipe insulation, and plumbing equipment.

1.03 QUALITY ASSURANCE:

A. Manufacturer's Qualifications:
   1. Firms regularly engaged in the manufacture of plumbing piping products and equipment of types, materials and sizes required, whose products have been in service for not less than five years.

B. Installer's Qualifications:
   1. Firm with at least three years history of successful experience on projects of similar nature.
   2. Licensed as a firm in the Contractor state of origin and in the State of Utah.
   3. Have a publicly registered bonding capacity of sufficient amount to cover this work and all other work in progress by the Contractor.
   4. All workmen employed on the project shall carry state licenses as journeyman or apprentice pipe fitters with additional certification for welders.

1.04 SUBMITTALS:

A. Product Data: Submit manufacturer’s technical literature indicating source, brand, type, model, performance characteristics, installation instructions, etc. Color chart for finished surfaces and fixtures.

B. Record Drawings: See Section 220000.

C. Operation and Maintenance Information: Provide information for all equipment including a comprehensive system operating description. See Section 220100.

1.05 REFERENCES:

A. Codes and Standards: Comply with applicable sections, follow recommended practices.
   1. International Plumbing Code 2021 with Utah State Amendments
   2. International Building Code 2021 with Utah State Amendments
   3. International Mechanical Code 2021 with Utah State Amendments

1.06 SEQUENCING AND SCHEDULING:

A. Coordinate the installation of floor drains, floor sinks and floor/roof penetrations.

B. Coordinate flashing materials installation of roofing, waterproofing, and adjoining substrate work.

C. Coordinate the installation of drains in poured-in-place concrete slabs, to include proper drain elevations, installation of flashing, and slope of slab to drains.

D. Coordinate with installation of sanitary sewer systems as necessary to interface building drains with drainage piping systems.

PART II - PRODUCTS

2.01 WASTE, DRAIN AND VENT SYSTEMS:

A. Sanitary Soil Drain, Waste and Vent Piping: (Not acceptable for Kitchen Drainage Piping, May be used for Kitchen Vent above grade installations.)
   1. Service weight hub and spigot cast iron pipe and fittings with Ty-Seal joints. Approved Manufacturers: AB&I, Charlotte and Tyler.
   2. Service weight "No-Hub" cast iron pipe and fittings with neoprene gaskets and stainless steel screw bands (above ground only). Approved Manufacturers: AB&I, Charlotte, Clamp-All and Tyler.
   3. Schedule 40 galvanized steel pipe with drainage pattern cast iron screwed fittings (above ground only).
      a. PVC Solid wall schedule 40 DWV piping and DWV fittings. Cellular core piping is not acceptable.
         1) Below Slab PVC: Schedule 40 solid wall plastic pipe meeting requirements of ASTM D 2665 joined using cement primer meeting requirements of ASTM F 656 and Pipe cement meeting requirements of ASTM D 2564.
         2) Above Grade: PVC Schedule 40 solid wall plastic pipe meeting requirements of ASTM D 2665 joined using cement primer meeting requirements of ASTM F 656 and pipe cement meeting requirements of ASTM D 2564. Do not install PVC piping in plenum spaces.
         3) Fittings: PVC Schedule 40 solid wall plastic pipe fittings meeting requirements of ASTM D 2665 joined using cement primer meeting requirements of ASTM F 656 and Pipe cement meeting requirements of ASTM D 2564.
   4. Cleanout Plugs and Ferrules: Cleanouts shall be of the same size as pipe, except that cleanout plugs larger than 4" will not be required. Cleanouts installed in connection with cast iron soil pipe shall consist of a long sweep quarter bend or one or two eighth bends extended to an easily accessible place, or as indicated on the drawings. Floor cleanouts shall be Zurn Figure Z-1324, or equivalent Josam, Wade, or Smith, caulked into the hub of the fitting and finished flush with the floor. Where cleanouts are shown in connection with threaded pipe and are accessible, they shall be cast iron drainage T-pattern, 90-degree branch fittings with square head brass screw plugs of the same size as the pipe, up to and including 4". All outside soil, waste and drain lines shall have two-way cleanouts at all changes of direction.

2.02 EQUIPMENT AND SYSTEM VENTS AND DRAINS:

A. Piping:
   1. Piping on closed side of system to match primary system served.
   2. Open vent and drain piping of Schedule 40 galvanized steel or Type K or L copper.

B. Valves: Provide valves appropriate for duty.
   1. Locate air vent valves accessibly mounted on wall, 5'-0" above floor, extended to drain.

C. Installation Notes:
   1. Slope all drains at 1/4" per foot or more.
   2. Provide complete condensate drain systems for all air handling units, etc., for all equipment which has a need for such service.
      a. Terminate such drain systems near floor drains, floor sinks or other authorized point of discharge.

2.03 DRAINAGE PIPING SPECIALTIES:

A. VENT FLASHING AND TERMINATION:
   1. Vent pipes penetrating the roof shall be flashed and made watertight at the roof with sheet flashing. Flashing shall weigh at least 6 pounds per square foot, shall be square and shall be turned up around the pipe and into the top of the pipe. Vent pipes shall extend at least 12" above roof. Use cast iron flashing clamps for pipe smaller than 3" rather than turning lead into pipe.

B. TRAPS: Each fixture and piece of equipment connecting to the drainage system shall be equipped with a trap. Each trap shall be placed as near to the fixture as possible and no fixture shall be double trapped.

PART III - EXECUTION

3.01 EXAMINATION:

A. Verify all dimensions by field measurements. Verify that all drainage and vent piping and specialties may be installed in accordance with pertinent codes and regulations, the original design, and the referenced standards.

B. Verify all existing grades, inverts, utilities, obstacles, and topographical conditions prior to installations.

C. Examine rough-in requirements for plumbing fixtures and other equipment having drain connections to verify actual locations of piping connections prior to installation.

D. Examine walls, floors, roof, and plumbing chases for suitable conditions where piping and specialties are to be installed.

E. Do not proceed until unsatisfactory conditions have been corrected.

3.02 PREPARATION FOUNDATION FOR UNDERGROUND BUILDING DRAINS:

A. Grade trench bottoms to provide a smooth, firm, and stable foundation, free from rock, throughout the length of the pipe.

B. Remove unstable, soft, and unsuitable materials at the surface upon which pipes are to be laid and backfill with clean sand or pea gravel to indicated invert elevation.

C. Shape bottom of trench to fit bottom of pipe for 90-degrees (bottom 1/4 of the circumference). Fill unevenness with tamped sand backfill. At each pipe joint dig bell holes to relieve the bell of the pipe of all loads, and to ensure continuous bearing of the pipe barrel on the foundation.

3.03 JOINING PIPES AND FITTINGS:

A. Copper Tubing: Solder joints in accordance with the procedures specified in ANSI B9.1.

B. Cast-Iron Soil Pipe: Make lead and oakum caulked joints, compression joints, and hubless joints in accordance with the recommendations in the CISPI Cast Iron Soil Pipe and Fittings Handbook, Chapter IV.

3.04 INSTALLATION:

A. Refer to the separate Division 22 section: Basic Piping Materials and Methods, for general piping installation instructions.

B. Install supports and anchors in accordance with Division-22 Basic Mechanical Materials and Methods section "Supports and Anchors".

C. General Locations and Arrangements: Drawings (plans, schematics, and diagrams) indicate the general location and arrangement of the piping systems. Location and arrangement of piping layout take into account many design considerations. So far as practical, install piping as indicated.

D. Make changes in direction for drainage and vent piping using appropriate 45-degree wyes, half-wyes, or long sweep quarter, sixth, eighth, or sixteenth bends. Sanitary tees or short quarter bends may be used on vertical stacks of drainage lines where the change in direction of flow is from horizontal to vertical, except use long-turn tees where two fixtures are installed back to

back and have a common drain. Straight tees, elbow, and crosses may be used on vent lines. No change in direction of flow greater than 90 degrees shall be made. Where different sizes of drainage pipes and fittings are connected, use proper size, standard increasers and reducers. Reduction of the size of drainage piping in the direction of flow is prohibited.

E. Install underground building drains to conform with the plumbing code, and in accordance with the Cast Iron Soil Pipe Institute Engineering Manual. Lay underground building drains beginning at low point of systems, true to grades and alignment indicated with unbroken continuity of invert. Place bell ends of piping facing upstream. Install required gaskets in accordance with manufacturer's recommendations for use of lubricants, cements, and other special installation requirements. Maintain swab or drag in line and pull past each joint as it is completed.

F. Install building drain pitched down at minimum slope of 1/4" per foot (2 percent) for piping 3" and smaller, and 1/8" per foot (1 percent) for piping 4" and larger.

G. Extend building drain to connect to sewer piping, of size and in location indicated for service entrance to building. Sewer piping is specified in a separate section of Division 2.

3.05 INSTALLATION OF PIPING SPECIALTIES:

A. Install flexible connection joints on roof drains.

B. Above Ground Cleanouts: Install in above ground piping and building drain piping as indicated, and:
1. as required by plumbing code;
2. each change in direction of piping greater than 45 degrees;
3. at minimum intervals of 50' for piping 4" and smaller and 100' for larger piping;
4. at base of each vertical soil or waste stack.

C. Cleanout Covers: Install floor and wall cleanout cover for concealed piping, types as indicated.

D. Flashing Flanges: Install flashing flange and clamping device with each stack and cleanout passing through waterproof membranes.

E. Vent Flashing Sleeves: Install on stacks passing through roof, secure over stack flashing in accordance with manufacturer's instructions.

F. Vent Cap: Install on all vents terminating through the sidewall. Secure to vent.

3.06 INSTALLATION OF FLOOR DRAINS AND FLOOR SINKS:

A. Install floor drains and floor sinks in accordance with manufacturer's written instructions and in locations indicated.

B. Install floor drains at low points of surface areas to be drained, or as indicated. Install floor sinks in locations shown to allow for indirect drains from equipment. Set tops of floor drains and floor sinks flush with finished floor.

C. Trap all drains connected to the sanitary sewer. Provide deep seal p-traps for all floor drains. Floor sinks located in kitchen areas shall be provided with standard depth p-traps. Floor sinks located in mechanical room areas shall be provided with deep seal p-traps.

D. Install drain flashing collar or flange so that no leakage occurs between drain and adjoining flooring. Maintain integrity of waterproof membranes, where penetrated.

E. Position drains so that they are accessible and easy to maintain.

3.07 CONNECTIONS:

A. Piping Runouts to Fixtures: Provide drainage and vent piping runouts to plumbing fixtures and drains, with approved trap, of sizes indicated; but in no case smaller than required by the plumbing code.

B. Locate piping runouts as close as possible to bottom of floor slab supporting fixtures or drains.

3.08 FIELD QUALITY CONTROL:

A. Inspections:

1. Do not enclose, cover, or put into operation drainage and vent piping system until it has been inspected and approved by the authority having jurisdiction.
2. During the progress of the installation, notify the plumbing official having jurisdiction, at least 24 hours prior to the time such inspection must be made. Perform tests specified below in the presence of the plumbing official.
3. Rough-in Inspection: Arrange for inspection of the piping system before concealed or closed-in after system is roughed-in, and prior to setting fixtures.
4. Final Inspection: Arrange for a final inspection by the plumbing official to observe the tests specified below and to insure compliance with the requirements of the plumbing code.
5. Reinspections: Whenever the piping system fails to pass the test or inspection, make the required corrections, and arrange for reinspected by the plumbing official.
6. Reports: Prepare inspection reports, signed by the plumbing official.

B. Piping System Test:
1. Test for leaks and defects all new drainage and vent piping systems. If testing is performed in segments, submit a separate report for each test, complete with a diagram of the portion of the system tested.
2. Leave uncovered and unconcealed all new, altered, extended, or replaced drainage and vent piping until it has been tested and approved. Expose all such work for testing, that has been covered or concealed before it has been tested and approved.
3. Repair all leaks and defects using new materials and retest system or portion thereof until satisfactory results are obtained.
4. Prepare reports for all tests and required corrective action.

3.09 ADJUSTING AND CLEANING:

A. Clean interior of piping. Remove dirt and debris as work progresses.

B. Clean drain strainers, domes, and traps. Remove dirt and debris.

3.10 PROTECTION:

A. Protect drains during remainder of construction period, to avoid clogging with dirt and debris, and to prevent damage from traffic and construction work.

B. Place plugs in ends of uncompleted piping at end of day or whenever work stops.

END OF SECTION 221300

This page intentionally left blank

SECTION 221400
– FACILITY STORM DRAINAGE

PART I - GENERAL

1.01 RELATED DOCUMENTS:

A. Drawings and General provisions of Contract, including General and Supplementary Conditions and Division-1 Specification sections, apply to work of this section.

1.02 SUMMARY:

A. This Section specifies building sanitary, storm drainage and vent, acid waste and vent and equipment, vent and drain piping systems, including drains and drainage specialties.

B. Related Sections:
   1. Separate sections in Division 2 specify sanitary sewage systems and trenching and backfilling. Provide a complete transition between work components.
   2. Separate sections in Division 7 specify flashing and sheet metal and joint sealers.
   3. Division 22 Plumbing section applies to the work of this section.
   4. Separate sections of Division 22 specify Basic Piping Materials and Methods, Hangers and Supports, Expansion Compensation, piping system identification materials and requirements, pipe insulation, and plumbing equipment.

1.03 QUALITY ASSURANCE:

A. Manufacturer's Qualifications:
   1. Firms regularly engaged in the manufacture of plumbing piping products and equipment of types, materials and sizes required, whose products have been in service for not less than five years.

B. Installer's Qualifications:
   1. Firm with at least three years history of successful experience on projects of similar nature.
   2. Licensed as a firm in the Contractor state of origin and in the State of Utah.
   3. Have a publicly registered bonding capacity of sufficient amount to cover this work and all other work in progress by the Contractor.
   4. All workmen employed on the project shall carry state licenses as journeyman or apprentice pipe fitters with additional certification for welders.

1.04 SUBMITTALS:

A. Product Data: Submit manufacturer’s technical literature indicating source, brand, type, model, performance characteristics, installation instructions, etc. Color chart for finished surfaces and fixtures.

B. Record Drawings: See Section 220000.

C. Operation And Maintenance Information: Provide information for all equipment including a comprehensive system operating description. See Section 220100.

1.05 REFERENCES:

A. Codes and Standards: Comply with applicable sections, follow recommended practices.
   1. State Boiler and Pressure Vessel Regulations
   2. ASME Codes for Boilers and Pressure Vessels
   3. International Plumbing Code 2021 with Utah State Amendments
   4. International Building Code 2021 with Utah State Amendments
   5. International Mechanical Code 2021 with Utah State Amendments
   6. International Fuel Gas Code 2021 with Utah State Amendments

1.06 SEQUENCING AND SCHEDULING:

A. Coordinate the installation of roof drains and roof penetrations.

B. Coordinate flashing materials installation of roofing, waterproofing, and adjoining substrate work.

C. Coordinate the installation of drains in poured-in-place concrete slabs, to include proper drain elevations, installation of flashing, and slope of slab to drains.

D. Coordinate with installation of sanitary sewer systems as necessary to interface building drains with drainage piping systems.

PART II - PRODUCTS

2.01 BUILDING STORM DRAINAGE SYSTEMS:

A. Fixtures and equipment as specified on the drawings and in Specification 224000.
   1. Verify drain compatibility with roofing system. Provide options as needed.
   2. Verify drain body assembly with roof/deck configuration. Provide adapters, clamps, etc., as needed.

B. Cast Iron Storm Drainage Piping (Non Pressure Rated to 30 Ft. Hd.):
   1. Service weight hub and spigot cast iron pipe and fittings with lead caulked or Ty-Seal joints. Approved Manufacturers: AB&I, Charlotte and Tyler.
   2. Service weight "No-Hub" cast iron pipe and fittings with neoprene gaskets and stainless steel screw bands (above ground only). Approved Manufacturers: AB&I, Charlotte and Tyler.
   3. Schedule 40 A53 galvanized steel pipe with drainage pattern cast iron screwed fittings (above ground service only).
   4. Cleanouts as for waste piping.

C. PVC Storm Drainage Piping:
   1. PVC Solid wall schedule 40 DWV piping and DWV fittings. Cellular core piping is not acceptable.
      a. Below Slab PVC: Schedule 40 solid wall plastic pipe meeting requirements of ASTM D 2665 joined using cement primer meeting requirements of ASTM F 656 and Pipe cement meeting requirements of ASTM D 2564.
      b. Above Grade: PVC Schedule 40 solid wall plastic pipe meeting requirements of ASTM D 2665 joined using cement primer meeting requirements of ASTM F 656 and pipe cement meeting requirements of ASTM D 2564. Do not install PVC piping in plenum spaces.
      c. Fittings: PVC Schedule 40 solid wall plastic pipe fittings meeting requirements of ASTM D 2665 joined using cement primer meeting requirements of ASTM F 656 and Pipe cement meeting requirements of ASTM D 2564.

PART III - EXECUTION

3.01 EXAMINATION:

A. Verify all dimensions by field measurements. Verify that all drainage and vent piping and specialties may be installed in accordance with pertinent codes and regulations, the original design, and the referenced standards.

B. Verify all existing grades, inverts, utilities, obstacles, and topographical conditions prior to installations.

C. Examine rough-in requirements for plumbing fixtures and other equipment having drain connections to verify actual locations of piping connections prior to installation.

D. Examine walls, floors, roof, and plumbing chases for suitable conditions where piping and specialties are to be installed.

E. Do not proceed until unsatisfactory conditions have been corrected.

3.02 PREPARATION FOUNDATION FOR UNDERGROUND BUILDING DRAINS:

A. Grade trench bottoms to provide a smooth, firm, and stable foundation, free from rock, throughout the length of the pipe.

B. Remove unstable, soft, and unsuitable materials at the surface upon which pipes are to be laid and backfill with clean sand or pea gravel to indicated invert elevation.

C. Shape bottom of trench to fit bottom of pipe for 90-degrees (bottom 1/4 of the circumference). Fill unevenness with tamped sand backfill. At each pipe joint dig bell holes to relieve the bell of the pipe of all loads, and to ensure continuous bearing of the pipe barrel on the foundation.

3.03 JOINING PIPES AND FITTINGS:

A. Copper Tubing: Solder joints in accordance with the procedures specified in ANSI B9.1.

B. Cast-Iron Soil Pipe: Make lead and oakum caulked joints, compression joints, and hubless joints in accordance with the recommendations in the CISPI Cast Iron Soil Pipe and Fittings Handbook, Chapter IV.

INSTALLATION:

A. Refer to the separate Division 22 section: Basic Piping Materials and Methods, for general piping installation instructions.

B. Install supports and anchors in accordance with Division-22 Basic Mechanical Materials and Methods section "Supports and Anchors".

C. General Locations and Arrangements: Drawings (plans, schematics, and diagrams) indicate the general location and arrangement of the piping systems. Location and arrangement of piping layout take into account many design considerations. So far as practical, install piping as indicated.

D. Make changes in direction for drainage and vent piping using appropriate 45-degree wyes, half-wyes, or long sweep quarter, sixth, eighth, or sixteenth bends. Sanitary tees or short quarter bends may be used on vertical stacks of drainage lines where the change in direction of flow is from horizontal to vertical, except use long-turn tees where two fixtures are installed back to back and have a common drain. Straight tees, elbow, and crosses may be used on vent lines. No change in direction of flow greater than 90 degrees shall be made. Where different sizes of drainage pipes and fittings are connected, use proper size, standard increasers and reducers. Reduction of the size of drainage piping in the direction of flow is prohibited.

E. Install underground building drains to conform with the plumbing code, and in accordance with the Cast Iron Soil Pipe Institute Engineering Manual. Lay underground building drains beginning at low point of systems, true to grades and alignment indicated with unbroken continuity of invert. Place bell ends of piping facing upstream. Install required gaskets in accordance with manufacturer's recommendations for use of lubricants, cements, and other special installation requirements. Maintain swab or drag in line and pull past each joint as it is completed.

F. Install building roof drain pitched down at minimum slope as noted on plans, but not less than 1/8" per foot (1 percent) for piping 4" and larger.

4.02 INSTALLATION OF PIPING SPECIALTIES:

A. Install flexible connection joints on roof drains.

B. Above Ground Cleanouts: Install in above ground piping and building drain piping as indicated, and:
   1. As required by plumbing code;
   2. Each change in direction of piping greater than 45 degrees;
   3. At minimum intervals of 50' for piping 4" and smaller and 100' for larger piping;
   4. At base of each vertical soil or waste stack.

C. Cleanout Covers: Install floor and wall cleanout cover for concealed piping, types as indicated.

INSTALLATION OF ROOF DRAINS:

A. Install drains at low points of roof areas as indicated on drawings, in accordance with the roof membrane manufacturer's installation instructions.

B. Install drain flashing collar or flange so that no leakage occurs between drain and adjoining roofing and waterproofing. Maintain integrity of waterproof membranes, where penetrated.

C. Position drains so that they are accessible and easy to maintain.

D. Provide and install flexible connection at connection between drain and piping.

E. Drain grating or top are to be removable to allow for maintenance. Maintenance personnel to use as a cleanout point. All drain bodies to be heavy duty.

5.02 CONNECTIONS:

A. Piping Runouts to Fixtures: Provide drainage and vent piping runouts to plumbing fixtures and drains, with approved trap, of sizes indicated; but in no case smaller than required by the plumbing code.

B. Locate piping runouts as close as possible to bottom of floor slab supporting fixtures or drains.

5.03 FIELD QUALITY CONTROL:

A. Inspections:
1. Do not enclose, cover, or put into operation drainage and vent piping system until it has been inspected and approved by the authority having jurisdiction.
2. During the progress of the installation, notify the plumbing official having jurisdiction, at least 24 hours prior to the time such inspection must be made. Perform tests specified below in the presence of the plumbing official.
3. Rough-in Inspection: Arrange for inspection of the piping system before concealed or closed-in after system is roughed-in, and prior to setting fixtures.
4. Final Inspection: Arrange for a final inspection by the plumbing official to observe the tests specified below and to insure compliance with the requirements of the plumbing code.
5. Reinspections: Whenever the piping system fails to pass the test or inspection, make the required corrections, and arrange for reinspected by the plumbing official.
6. Reports: Prepare inspection reports, signed by the plumbing official.

B. Piping System Test:
1. Test for leaks and defects all new drainage and vent piping systems. If testing is performed in segments, submit a separate report for each test, complete with a diagram of the portion of the system tested.
2. Leave uncovered and unconcealed all new, altered, extended, or replaced drainage and vent piping until it has been tested and approved. Expose all such work for testing, that has been covered or concealed before it has been tested and approved.
3. Repair all leaks and defects using new materials and retest system or portion thereof until satisfactory results are obtained.
4. Prepare reports for all tests and required corrective action.

5.04 ADJUSTING AND CLEANING:

A. Clean interior of piping. Remove dirt and debris as work progresses.

B. Clean drain strainers, domes, and traps. Remove dirt and debris.

5.05 PROTECTION:

A. Protect drains during remainder of construction period, to avoid clogging with dirt and debris, and to prevent damage from traffic and construction work.

B. Place plugs in ends of uncompleted piping at end of day or whenever work stops.

END OF SECTION 221400

SECTION 221500
COMPRESSED AIR SYSTEMS

PART I - GENERAL

1.01 REFERENCE STANDARDS

A. ASTM B88 - Standard Specification for Seamless Copper Water Tube; 2022.

1.02 SUMMARY:

A. This Section specifies compressed air piping systems, fittings, and specialties. Extent of work is indicated on drawings and schedules and by requirements of this section.

B. Product Data: Submit manufacturer's product data, including source, brand, type, model and performance characteristics for the following products:
   1. Valves
   2. Quick couplers
   3. Pressure regulating and reducing valves

C. Related Section
   1. Section 226213 applies to this section.

PART II - PRODUCTS

2.01 PIPE AND FITTINGS:

A. Compressed Air Piping Within Building:
   1. Pipe sizes 2-1/2" and smaller: Copper tubing. Conform to ASTM B88, Type K, hard temper, copper tube; ANSI B16.22 streamlined pattern wrought-copper fittings, with brazed joints (Silfoss or equivalent).
   2. Aluminum Piping System: Aluminum pipe, Alloy Grade AA 6035-T5, for push-connect bite ring couplings, and roll-groove couplings.
      a. Pressure and Temperature range: Aluminum piping and related specialties for general-service compressed-air systems operating at 220 psig (1516.85 kPa) or less, across a temperature range of minus 4 to plus 176 deg F.
      b. Tubing, 14 to 10.75 inch (273 mm): Aluminum pipe, Alloy Grade AA 6063-T5.
      c. Pipe Coating: Powder-coated paint that is certified nontoxic to AAMA 603 and AAMA 605, blue for compressed air.
      d. Provide tubing that is quality controlled to comply with tolerances specified by roll-groove or push-to-connect coupling manufacturer. Tubing manufacturers follows ISO 9001:2000 quality standards.
      e. Pipe Identification: Decal with maximum working pressure and temperature on each length of pipe.
      f. Available sizes of couplings in first subparagraph below are NPS 1/4, NPS 1/2, NPS 3/4, NPS 1, NPS 1-1/4, NPS 1-1/2, and NPS 2.
         1) A Push-Connect Bite Ring Couplings, 14 to 2.48 inch (63 mm): Solid-brass and nickel-plated body, NBR O-ring seal in excess of 36 percent, and AISI Type 304 stainless steel clamping washer.
         2) Fittings: Solid brass and nickel plated.
      g. Retain first two subparagraphs below if valves are supplied with aluminum piping system or delete both if specified in “valves” Article.
         1) Ball Valves, 20 to 2.48 inch (63 mm): NPT ends, or push-connect bite ring ends.
         2) Butterfly Valves, 73 to 10.75 inch (273 mm): Tube to tube, with two roll-groove end couplings.
         3) Flanges, 73 to 10.75 inch (273 mm): ASME B16.5, Class 150.

2.02 PIPING SPECIALTIES:

A. Quick Couplers: 3/8" capacity, 1/2" NPT, ARO 23103-14.

B. Filter: Coalescing type replaceable media, polycarbonate bowl with guard, manual drain. ARO 5231.

C. Pressure Reducing Valve: Zinc die cast body with corrosion resistant coating. Balanced valve design nylon reinforced seals; Buna N diaphragm. Self cocking adjustment knob. Mounting bracket. Maximum inlet pressure rating: 250 psig (1723.69 kPa). 0-50 outlet psi pressure range. ARO 127231. Provide unit with 0-160 psig (1103.16 kPa) pressure gauge.

2.03 TYPICAL DROP LOCATIONS:

A. At each point of delivery, provide a drop with dirt leg, ball valve and quick connect fitting. Unless otherwise noted install 4'-0" above floor.

2.04 HOSE REEL:

A. Hose reel with automatic coil spring return, ½" OD hose, 25 feet (762 cm) long, 300 psi (2068.43 kPa) rated. Provide with mounting bracket for wall or overhead mounting.

B. Approved Manufacturers:
1. Cox Reel Model P-LP-415
2. Reel Craft

PART 3 - EXECUTION

3.01 INSTALLATION

A. Install piping, fittings and equipment per manufacturers written instructions.

B. Provide hangers and supports to adequately support the piping and maintain clean straight lines in all exposed areas. Coordinate routing with all other trades and utilities.

C. Provide quick connect drops in shop area as shown on the drawings.

D. Connect compressed air piping to compressor with flexible piping connection.

END OF SECTION 221500

SECTION 221519
AIR COMPRESSORS

PART 1 - GENERAL

1.01 REFERENCE STANDARDS

A. ISA 7.0.01 - Quality Standard for Instrument Air; 1996.

B. NFPA 70 - National Electrical Code; Most Recent Edition Adopted by Authority Having Jurisdiction, Including All Applicable Amendments and Supplements.

1.02 SUMMARY

A. Includes But Not Limited To
   1. Furnish and install air compressors as described in Contract Documents.

B. Related Sections
   1. Section 221500 apply to this section.

PART 2 - PRODUCTS

2.01 MANUFACTURED UNITS

A. Compressor
   1. Dual stage reciprocating type, lead/lag control, pressure lubricated of capacity shown on drawings and following
      a. Working pressure - 200 psig (1378.95 kPa).
      b. Include pressure reducing valve with filters, pressure gauges, ball valves, moisture condenser, automatic drain and accessories to maintain 100 psig (689.48 kPa) at equipment.
   2. Approved Manufacturers & Models -
      a. Ingersoll Rand
      b. Quincy
      c. Engineer approved equal prior to bidding

B. Tank
   1. ASME rated, stamped and constructed with ASME rated and labeled pressure relief valve.
   2. Intermittent Stop/Start Control – Provide with factory starter designed to cut-out at 150 psig (1034.21 kPa), cut-in at 110 psig (758.42 kPa).

C. Motor
   1. As specified in Section 230513.
   2. Equip with motor overload protection.
   3. Provide with enclosed belt guard.

2.02 ACCESSORIES

A. Available Manufacturers: Subject to compliance with requirements, manufacturers offering piping products which may be incorporated in the work are, but not limited to:
   1. Filter -
      a. ARO
   2. Quick Couplings -
      a. ARO, Series 310
         1) Pressure Regulating and Reducing Valves -
      b. ARO, 127241-010, 5-125 psi (861.84 kPa)
         1) Combination Filter Regulator -
      c. Watts
      d. ARO, 129241-002, 5-125 psi (861.84 kPa)
         1) Solenoid Valve -
      e. ASCO, 8210 Series, 120 volt, normally closed, 150 psi (1034.21 kPa) operating differential, brass body.

3. Desiccant Filter - Wall or frame mounted packed column, Desiccant media filter to adsorb/absorb moisture and oil replaceable media to change color as exhausted. Capacity to match compressor capacity.
4. Approved manufacturers:
5. Deltech
6. Balston

REFRIGERATED AIR DRYER

A. General: Air dryers shall be of the continuous duty mass refrigerated dryer type and shall maintain the air in the system with a dew point low enough to prevent condensation within the piping at line pressure in a cold building ambient environment. (40 degrees Fahrenheit (4.44 degrees Celsius) ambient) at 125 psi (861.84 kPa) main pressure, 20 psig (137.90 kPa) sub-main pressure. Locate air dryer(s) off of the outlet of the compressor(s).] Control air delivered to the system shall conform to ISA 7.0.01.

B. Type: Provide self-contained, cabinet housed, mechanical refrigeration type units complete with heat exchanger, refrigeration compressor, condensing coil and fan(s), automatic controls, moisture removal trap, internal power and control wiring, internal piping, and full refrigerant charge.
   1. Air Connections: Inlet and outlet connections at same level, factory insulated.
   2. Heat Exchangers: Air to air pre-cooling/recovery coil and refrigerant to air cooling and condensing coils. Provide heat exchangers with automatic control system to bypass refrigeration system on low or no load condition.
   3. Moisture Separator: Centrifugal type located at discharge of heat exchanger.
   4. Refrigeration Unit: Hermetically sealed type to operate continuously to maintain specified 21 degrees Fahrenheit (-6.11 degrees Celsius) dew point. House unit in steel cabinet provided with access door and panel for maintenance and inspection.
   5. Accessories: Air inlet temperature gage, air inlet pressure gage, on/off switch, high temperature light, power on light, refrigerant pressure gage, air outlet temperature gage, air outlet pressure gage.
   6. Motor: Refer to Section NEMA MG1.
   7. Controls: Set up units for automatic control and operation whenever activated.
   8. Wiring Terminations: Provide terminal lugs to match branch circuit conductor quantities, sizes, and materials indicated. Enclose terminal lugs in terminal box sized to NFPA 70.
   9. Disconnect Switch: Provide unit with factory mounted disconnect switch in control panel.
   10. Cord and Plug: Provide unit with 3-wire (#12) plus ground cord and plug for connection to electric wiring system, including grounding connector.

C. Capacity and electrical characteristics: As scheduled

D. Acceptable Manufacturers
   1. Hankison
   2. Ingersoll-Rand
   3. Quincy

E. Installation:
   1. Set and secure units on the frame on a reinforced concrete pad
   2. Pipe unit dry compressed air discharge with union, spring loaded check valve, and isolating ball valve at compressed air discharge outlet.
   3. If there is a drain connection on the unit, pipe same to nearest oil/water separation unit.
   4. Connect units to provided power.

PART 3 - EXECUTION

4.01 INSTALLATION

A. Mount air compressor on concrete housekeeping pad. Mount compressor on vibration isolation pads.

B. Provide quick connect stub-outs in shop area as shown on the drawings.

C. Connect compressed air piping to compressor with flexible piping connection.

END OF SECTION 221519

This page intentionally left blank

SECTION 221800
– SPECIAL GASES PIPING SYSTEMS

PART 1 - GENERAL

1.01 REFERENCE STANDARDS

A. ASTM F1282 - Standard Specification for Polyethylene/Aluminum/Polyethylene (PE-AL-PE) Composite Pressure Pipe; 2023a.

B. ASTM F1974 - Standard Specification for Metal Insert Fittings for Polyethylene/Aluminum/Polyethylene and Crosslinked Polyethylene/Aluminum/Crosslinked Polyethylene Composite Pressure Pipe; 2023.

1.02 RELATED DOCUMENTS:

A. Drawings and general provisions of Contract, including General and Supplementary Conditions and Division-1 Specification sections, apply to work of this section.

B. Related Sections:
   1. Division 22 “General Plumbing Requirements” apply to work of this section.

1.03 SUMMARY:

A. This Section specifies the Argon, Carbon Dioxide, Mixed gas piping systems, fittings, and specialties. Extent of work is indicated on drawings and schedules and by requirements of this section.

1.04 SUBMITTALS:

A. Refer to Division 1 and General Plumbing Requirements for administrative and procedural requirements for submittals.

B. Product Data: Submit manufacturer's product data, including source, brand, type, model and performance characteristics for the following products:
   1. Valves
   2. Piping

C. Manufacturer's Qualifications: Firms regularly engaged in manufacture of general-use centrifugal compressors with characteristics, sizes and capacities required, whose products have been in satisfactory use in similar service for not less than five years.

D. Operation and Maintenance Data: Submit maintenance data and parts lists for each type of pipe, fitting and valves. Include this data product data in accordance with requirements of Section - General Plumbing Requirements.

1.05 QUALITY ASSURANCE:

A. Codes and Standards:
   1. Plumbing Code Compliance: Comply with International Plumbing Code and NFPA requirements regarding compressed nitrogen, hydrogen and helium gas systems.

1.06 PRODUCT DELIVERY, STORAGE AND HANDLING:

A. Receive equipment carefully transport to prevent damage, breaking, denting and scoring.

B. Store components in clean dry place. Protect from weather, dirt, fumes, water, construction debris and physical damage.

PART 2 - PRODUCTS

2.01 MANUFACTURERS:

A. Manufacturer Uniformity: Conform to the requirements specified in General Mechanical Requirements, under "Product Options".

2.02 PIPE AND FITTINGS:

A. Argon and Carbon Dioxide Gas Piping:
   1. Lab gas piping size 1” and smaller shall be PE-AL-PE composite pipe made with high density polyethylene and aluminum conforming to ASTM F1282 and CSA B137.9.

2. Lab gas fittings size 1” and smaller shall be nickel plated brass or 316 stainless steel and shall conform to the dimensional and physical requirements of ASTM F1974 and CSA B137.9.
3. All pipe, fittings and accessories shall be Dur atec Air-Line as manufactured by IPEX.

B. Approved Manufacturers:
1. Duratec
2. Engineer Approved Equal

2.03 VALVES:

A. Valves as noted below.
1. Stainless steel ball valves. Valves shall be rated for 250 psi (1723.69 kPa) argon and carbon dioxide gas systems. Install in readily accessible locations.

PART 3 - EXECUTION

3.01 EXAMINATION

A. Verify all dimensions by field measurements. Verify that all air distribution piping may be installed in accordance with pertinent codes and regulations, the original design, and the referenced standards.

B. Examine areas and conditions under which gas piping and related equipment are to be installed.

3.02 JOINING PIPES AND FITTINGS:

A. Provide threaded fittings as needed. Weld all joints with a background flow. Allow for pipe expansion and contraction.

3.03 PIPING INSTALLATION:

A. Refer to the Division 15 section: “General Pipes and Fittings” for general piping installation instructions.
1. General Locations and Arrangements: Drawings (plans, schematics, and diagrams) indicate the general location and arrangement of the piping systems. Location and arrangement of piping layout take into consideration pipe sizing and friction loss, expansion, compressor sizing, and other design considerations. So far as practical, install piping as indicated.

B. Install piping with 1/32" per foot (1/4 percent) downward slope towards drain points.

3.04 INSTALLATION OF VALVES:

A. Installation requirements for valves are per manufacturer’s instructions for installation into carbon dioxide, argon and mixed gas piping systems.

B. Shutoff Valves: Provide shutoff valves upstream of each PRV and filter, for sectionalizing system and elsewhere as indicated.

3.05 FIELD QUALITY CONTROL:

A. Inspections:
1. Do not enclose, cover, or put system into operation until it has been inspected by the Owner’s Representative and General Contractor.

B. Piping System Test:
1. Leak test all new distribution piping systems and parts of existing systems, which have been altered, extended or repaired. Test system without devices attached, at pressure equal to service pressure for 24 hours. Check joints for leaks with soap solution. Let stand for 24 hours, no loss allowed, repair any defects or leaks.
2. Leave uncovered and unconcealed all new, altered, extended, or replaced distribution piping until it has been tested and approved. Expose all such work for testing that has been covered or concealed before it has been tested and approved.

3. Repair all leaks and defects using new materials and retest system or portion thereof until satisfactory results are obtained.

3.06 ADJUSTING AND CLEANING:

A. Cleaning:
1. Purge all new distribution piping systems and parts of existing systems which have been altered, extended, or repaired prior to use.

END OF SECTION 221800

This page intentionally left blank

SECTION 223436
– COMMERCIAL GAS DOMESTIC WATER HEATERS

PART I - GENERAL

1.01 RELATED DOCUMENTS:

A. Drawings and general provisions of the contract, Division 01, etc., apply to the work of this section.

B. Other Division 22 to the extent applicable apply to the work of this section.

1.02 EXTENT OF THE WORK:

A. Provide gas-fired domestic hot water heaters as scheduled and detailed.

B. Provide all supporting installation with flues, gas piping, water piping and valves, relief valves, drains, etc., all required for a complete installation.

1.03 SUBMITTALS:

A. Product Data: Submit information for each water heater and related material and equipment. Include dimensional data. Verify adequate clearance and support service before submitting data.

1.04 REFERENCES:

A. Codes and Standards:
   1. Energy Code for commercial and high-rise buildings. (ASHRAE 90.1-2019 Chapter 4). Building Service Systems and Equipment.
      a. Comply with efficiencies and heat loss requirements of this code.
   2. International Plumbing Code 2021 with Utah State Amendments

PART II - PRODUCTS

2.01 COMMERCIAL GAS-FIRED WATER HEATERS:

A. General: Provide commercial gas-fired water heaters and expansion tank of sizes and capacities as indicated on schedule. Provide certification of design by AGA under Volume III tests for commercial water heaters for delivery of 180 degrees Fahrenheit (82.22 degrees Celsius) water. Provide with concentric vent kit and condensate drain neutralization kit from manufacturer.

B. Manufacturer: Subject to compliance with requirements, provide commercial gas-fired water heaters of one of the following:
   1. American
   2. A. O. Smith Corp
   3. State
   4. PVI

PART III - EXECUTION

3.01 INSTALLATION:

A. Install complete. Place water heater, connect piping with isolation and bypass valving, install relief valves and relief extension, connect to gas service with appliance valve, pressure regulating valve, burner control valve, extend flue and combustion air piping through roof with manufacturer supplied termination kit, seismically restrain units to structure.
   1. FIELD QUALITY CONTROL:
      a. General: Provide the services of a factory-authorized service representative to test and inspect unit installation, provide start-up service, and demonstrate and train Company's maintenance personnel as specified below.
   2. Test and adjust operating and safety controls. Replace damaged and malfunctioning controls and equipment.

a. Train Company's maintenance personnel on procedures and schedules related to start-up and shutdown, troubleshooting, servicing, and preventative maintenance.
b. Review data in Operating and Maintenance Manuals. Refer to Division 1 Section "Project Closeout."

3. CHECK OUT
   a. Perform the following before start-up final checks:
4. Fill water heaters with water.
5. Piping systems test complete.
6. Check for piping connections leaks.
7. Check for adequate combustion air.
8. Check for clear vent.
9. Test operation of safety controls and devices.
   a. Perform the following start-up procedures:
10. Energize circuits.
11. Adjust operating controls.
12. Adjust hot water outlet temperature setting

END OF SECTION 223436

SECTION 224000
- PLUMBING FIXTURES

PART I - GENERAL

1.01 RELATED DOCUMENTS:

A. Drawings and general provisions of Contract, including General and Supplementary Conditions and Division-1 Specification sections, apply to work of this section.

B. Division 22, "Basic Plumbing Materials and Methods" sections apply to work of this section.

1.02 SUMMARY:

A. This Section specifies plumbing fixtures and trim. The types of fixtures specified includes the following:
   1. Water Closets
   2. Urinals
   3. Lavatories
   4. Sinks
   5. Wash Sink
   6. Service Sink
   7. Ice Maker Connection Box
   8. Electric Water Coolers
   9. Emergency Fixtures
   10. Hose Bibb
   11. Wall Hydrants
   12. Floor Drains
   13. Catch Basins
   14. Roof Drains
   15. Secondary (Emergency) Roof Drains
   16. Downspout Nozzles
   17. Cleanouts

1.03 SUBMITTALS:

A. Product Data: Submit Product Data and installation instructions for each fixture, faucet, specialties, accessories, and trim specified; clearly indicate rated capacities of selected models of water coolers.

B. Shop Drawings: Submit rough-in drawings. Detail dimensions, rough-in requirements, required clearances, and methods of assembly of components and anchorages. Coordinate requirements with fixtures installed in countertops and cabinets. Furnish templates.

C. Color Charts: Submit manufacturer's standard color charts for fixture colors.

D. Maintenance Data: Include data in Maintenance Manual specified in Division 1 and Section 220100.

1.04 REFERENCES:

A. Codes and Standards:
   1. ASHRAE Standard 18: "Method of Testing for Rating Drinking Water Coolers with Self-Contained Mechanical Refrigeration Systems".
   2. ARI Standard 1010: "Drinking-Fountains and Self-Contained Mechanically- Refrigerated Drinking-Water Coolers."
   3. ANSI Standards A117.1: "Specifications for Making Buildings and Facilities Accessible To and Usable By Physically Handicapped People."
   4. ADA: Americans with Disability Act.
   5. International Plumbing Code 2021 with Utah State Amendments

1.05 DELIVERY, STORAGE, AND HANDLING:

A. Store fixtures where environmental conditions are uniformly maintained within the manufacturer's recommended temperatures to prevent damage.

B. Store fixtures and Trim in the manufacturer's original shipping containers. Do not stack containers or store in such a manner that may cause damage to the fixture or trim.

1.06 SEQUENCE AND SCHEDULING:

A. Schedule rough-in installations with the installation of other building components.

PART II - PRODUCTS

2.01 MANUFACTURERS:

A. Manufacturer uniformity shall be as specified in the general conditions section of the specification.

2.02 FIXTURES AND TRIM: THE MODEL NUMBERS LISTED BELOW HAVE BEEN CAREFULLY SELECTED TO HELP BIDDERS IN THE SUBMITTAL PROCESS OF SELECTING FIXTURES AND TRIM. THE COMPLETENESS AND ACCURACY OF THESE NUMBERS MUST BE VERIFIED DURING THE BIDDING PROCESS. ANY DISCREPANCIES BETWEEN THE MODEL NUMBERS AND THE FIXTURE, OR TRIM DESCRIPTIONS NOTED BY A MANUFACTURER DURING THE BIDDING PROCESS WILL BE REPORTED TO THE ARCHITECT / ENGINEER FOR CLARIFICATION. CLARIFICATIONS WILL BE MADE A PART OF THE CONTRACT THROUGH AN ADDENDUM ONLY. THE CONTRACTOR IS RESPONSIBLE FOR REPORTING ANY CLARIFICATIONS BEFORE THE BID DATE AS REQUIRED IN THIS SPECIFICATION.

A. Water Closets:
   1. (P-1) ADA Compliant Fixture:
      a. Floor mounted, vitreous china, elongated bowl, 1.28 gallon per flush, siphon jet, ADA compliant, color to be white.
      b. Trim and Accessories: Provide with flush valve and seat.
      c. Approved Manufacturers:
         1) Kohler Model No. K-96057
         2) American Standard
         3) Zurn
         4) Sloan
         5) Toto
   2. (P-1) Water Closet Flush Valve:
      a. Exposed type, chrome plated brass, 1.28 gpf, closet flushometer, piston type, vacuum breaker flush connection, 1" screwdriver back-check angle stop, 1-1/2" spud coupling, side mount sensor operator, vandal resistant stop cap with set screw, sweat solder adapter with cover tube and cast set screw wall flange, hard-wired power supply.
      b. Approved Manufacturers:
         1) Kohler
         2) Sloan Gem 2 111 SMO-1.28-XL-OR
         3) Zurn
         4) Delany
   3. (P-1) Water Closet Seat:
      a. (White) extra heavy weight and injection molded solid plastic, elongated, open front, self-sustaining check hinge, Sta-Tite fastening system, less cover.
      b. Approved Manufacturers: (Typical on standard use and ADA fixtures)
         1) Bemis No. 1655SSCT
         2) Church No. 9500SSCT
         3) Olsonite No. 95SSCT

B. Urinals:

1. (P-2A) Standard Use Fixture:
   a. Wall mounted, water saving 0.125 gpf fixture, vitreous china, washout style, 3/4" top spud, 2" outlet. Mount with rim at 24" A.F.F.
   b. Trim and Accessories: Provide with flush valve and carrier system.
   c. Approved Manufacturers:
      1) Kohler
      2) American Standard
      3) Zurn No. Z5738-U
      4) Sloan
2. (P-2B) ADA Fixture:
   a. Wall mounted, water saving 0.125 gpf fixture, vitreous china, washout style, 3/4" top spud, 2" outlet. Mount with rim at 17" A.F.F.
   b. Trim and Accessories: Provide with flush valve and carrier system.
   c. Approved Manufacturers:
      1) Kohler
      2) American Standard
      3) Zurn No. Z5738-U
      4) Sloan
3. (P-2A and P-2B) Flush Valves:
   a. Exposed type, chrome plated brass, closet flushometer, piston type, vacuum breaker flush connection, 0.125 gpf, 1" screwdriver back-check angle stop, 1-1/2" spud coupling, side mount sensor operator, vandal resistant stop cap with set screw, sweat solder adapter with cover tube and cast set screw wall flange, hard-wired power supply.
   b. Approved Manufacturers:
      1) Kohler
      2) Sloan Gem-2-186-SMO
      3) Zurn
      4) Delany
4. (P-2A and P-2B) Carriers:
   a. Urinal Carriers: Provide floor mounted carrier system with coated steel uprights with welded feet, adjustable top and bottom support plates and mounting fasteners.
   b. Approved Manufacturers:
      1) J. R. Smith
      2) Josam
      3) Wade
      4) Zurn
      5) Mifab
      6) Watts

C. Lavatories:
1. (P-3) ADA Compliant Fixture
   a. Wall mounted, 18" x 20", vitreous china, front overflow, faucet holes on 4" centers, floor mounted concealed arm carrier. Mount with bottom front of lavatory 29" (minimum) above finished floor and with rim at 34" (maximum) above finished floor to meet ADA requirements.
   b. Approved Manufacturers:
      1) Kohler No. K-2032
      2) American Standard
      3) Zurn
      4) Sloan
2. (P-3) Sensor Faucet:
   a. Chrome Plated Brass, Deck mounted, 4” center set cast brass, Sensor activated with hard-wired connection, chrome plated hand washing faucet, ADA compliant, vandal

resistant 0.5 GPM aerator.
b. Provide with trim plate and grid strainer. Furnish with thermostatic mixing valve (ASSE1070) to control the hot water supply temperature to 105oF.
c. Approved Manufacturer and Model -
1) Moen
2) Chicago Faucet
3) Symmons
4) Sloan Model No. SF-2300

D. Sinks:
1. (P-4A and P-4B) Sink Fixture:
a. Counter mounted, self-rimming, single compartment, 18 ga stainless steel, 21 inches (533.4 mm) by 19 inches (482.6 mm) outside dimensions. Provide three holes for faucet on P-4A sink and four holes for faucets on P-4B sink.
b. Trim and Accessories: Faucet, strainer, p-trap, supplies and stops.
c. Approved Manufacturers:
1) Bradley
2) Just
3) Elkay Model LR-2119
(P-4A and P-4B) Sink Faucet:
a. Deck mounted, 9-3/4" high gooseneck spout with 5-3/8” projection and 5-5/8” spout height, quarter turn ceramic disc type, 1.5 gpm vandal resistant aerator, lever handles, supplies on 8" centers.
b. Approved Manufacturers:
1) Chicago Faucet No. 1100-GN2BJKCP-369-E3VPJKCP
2) American Standard
3) Zurn
4) Kohler
2. (P-4B) Filtered Faucet:
a. Deck mounted, 13" high gooseneck spout with 5-1/4” projection, quarter turn ceramic disc type handle, 2.2 gpm vandal resistant aerator, lever handles, single hole. Mount next to P-4B hot and cold faucet. See plan for carbon activated filter requirement.
b. Approved Manufacturers:
1) Chicago Faucet No. 35-317VPAXKABCP
2) American Standard
3) Zurn
4) Kohler
3. (P-4A) Sink Strainer:
a. Drain with basket strainer, stainless steel construction.
b. Approved Manufacturers:
c. Kohler
1) American Standard
2) Elkay Model LK35
3) McGuire
4) ProFlo
4. (P-4B) Garbage Disposal:
a. Continuous feed, on/off control with wall switch, 3/4 H.P., 120 Volt, 1 Phase, 60 Hz, 1725 RPM, 8.1 Amp. Permanently Lubricated Upper & Lower Bearings, Manual reset Overload, Anti-vibration mount.
b. Coordinate with electrical contractor for wall switch location and connection.
c. Approved Manufacturers:
1) Insinkerator Evolution Series
5. (P-4C) Sink:

a. Double compartment, free standing, deep, 14 gauge type 304 stainless steel, 2 faucet holes on 8” centers in backsplash.
b. Trim and Accessories: Provide with gooseneck sink faucet, water supplies and stops, outlet strainer and p-trap.
c. Approved Manufacturers:
1) Advance Tabco Model No. 94-2-36
2) Just
3) Elkay

6. (P-4C) Sink Faucet:
a. Wall mounted faucet, 12” long swing spout, 1.5 gpm aerator, ceramic ¼-turn operating cartridge, vandal proof lever handles, 8” on center.
b. Approved Manufacturers:
1) Chicago Faucet Model No. 445-L12E35XKABCP
2) American Standard
3) Zurn
4) Kohler

7. (P-4D) Circular Wash Station:
a. Fixture shall be a 5-user wash fountain with sensor actuated type, 36” diameter bowl, bowl constructed of 16 gauge type 304 stainless steel with a circular shape and shall be self-cleaning and self-draining by means of a central drain. Provide a vandal resistant steel access panel in the pedestal. Provide unit complete with off-line vent with supplies from below, solenoid valve, ball type stop valves, strainers, thermostatic mixing valve and liquid soap dispenser. Unit to be no-lead type, standard height, infrared activation, liquid soap dispenser, and thermostatic mixing valve.
b. Provide new low voltage wiring for control panel. Control panel shall be capable of turning the two wash basin solenoid valves to normal “auto” position, all solenoid open position and all solenoid closed position. Provide controller by wash basin manufacturer. Locate controller in janitor room adjacent to wash basin room. Contractor to provide and install all equipment, wiring, power, etc. for complete installation.
c. Approved Manufacturers:
1) Bradley WF2705-A-STD-IR-LSD-TMA
2) Engineer Approved Equal

B. Service Sink:
1. (P-5) Service Sink Fixture:
a. Floor mounted, enameled cast iron sink with 3” outlet, corner style with removable vinyl rim guard. Provide with service sink faucet.
b. Approved Manufacturers:
1) American Standard Model No. 7741.000 w/ 7745.811 rim guard
2) Commercial Enameling
3) Kohler

2. (P-5) Service Sink Faucet:
a. Wall-mounted mixing faucet, bucket hook, vacuum breaker, top brace, integral stops in shanks, polished chrome finish, mount so inlets are 36" above finished floor. Provide 5 feet (152.4 cm) of 3/4" commercial grade rubber hose with male and female connectors.
b. Approved Manufacturers:
1) Kohler No. K-837T60-4A
2) Chicago Faucet
3) American Standard
4) Zurn

3. (P-5) Service Sink Outlet:
a. 3” threaded outlet and chrome plated flat metal grid strainer with cleanout plug.

b. Approved Manufacturers:
1) Kohler No. K-9146
2) Chicago Faucet
3) American Standard
4) Zurn

C. Ice Maker Connection Box:
1. (P-6) Ice Maker Box Fixture:
a. One-Piece Box and flange design, snap-on frame. Chrome plated ¼ turn adapter ball valve with ½" copper sweat connection.
b. Approved Manufacturers:
1) Oatey
2) Guy Gray
3) Water-Tite

D. Electric Water Cooler:
1. (P-7A) Electric Water Cooler Fixture:
a. Self-contained, wall hung, bi-level, with bottle filler, front and side pressure operators with cast brass bubbler, air cooled, 7.8 gal. per hour capacity (minimum), with 90° F ambient air and 80° F inlet water and leaving at 50° F, Stainless Steel Basin with integral drain. Five year warranty, 120 volt, 60 cycle, 1 phase power. Provide with hi/low orientation shown on architectural drawings, with filter and filter indication light.
b. Trim and Accessories: Provide with water supply and stop and PVC P-trap per manufacturers installation instructions.
c. Carrier: Provide floor mounted carrier system with adjustable top and bottom support plates, dura-coated rectangular steel uprights with welded feet and mounting fasteners.
d. Approved Manufacturers:
1) Elkay
2) Oasis Model No. PG8EBFSLTT
3) Acorn Aqua
4) Haws
5) Halsey Taylor
2. (P-7B) Electric Water Cooler Bottle Filler:
a. Self-contained, wall hung, bottle filler, air cooled, 7.8 gal. per hour capacity (minimum), with 90° F ambient air and 80° F inlet water and leaving at 50° F, Stainless Steel Basin with integral drain. Five year warranty, 120 volt, 60 cycle, 1 phase power. Provide with filter and filter indication light.
b. Trim and Accessories: Provide with water supply and stop and PVC P-trap per manufacturers installation instructions.
c. Carrier: Provide floor mounted carrier system with adjustable top and bottom support plates, dura-coated rectangular steel uprights with welded feet and mounting fasteners.
d. Approved Manufacturers:
1) Elkay
2) Oasis Model No. MW8EBQ
3) Sunroc
4) Haws
5) Filtrine
6) Halsey Taylor

E. Emergency Fixtures:
1. (P-8) Emergency Eye/Face Wash
a. Eye/face wash, wall mounted, two spray heads, each head with dust cover, internal flow control and filter to remove impurities from the water flow, with 11-3/4" diameter orange ABS plastic bowl, Mount activation handle on accessible side of bowl.

b. Provide a single thermostatic hot and cold water mixing valve to supply the emergency eye wash units. See plans for location.
c. Approved Manufacturers:
1) Guardian Model No. G1782 with Model G3600LF mixing valve.
2) Haws
3) Speakman

F. Hose Bibb:
1. (HB) Fixture:
a. Chrome plated brass, removable key, vacuum breaker, 3/4" inlet and outlet, provide isolation valve upstream of bibb.
b. Approved Manufacturers:
1) Chicago No. 998
2) T & S Brass

G. Non-Freeze Wall Hydrant:
1. (WH) Fixture:
a. Bronze hydrant, exposed type removable key, vacuum breaker, automatic draining, stainless steel operating stem, rough brass finish.
b. Approved Manufacturers:
1) Woodford No. 65
2) Zurn
3) Sloan

H. Floor Drains:
1. (FD-1) Fixture:
a. 6" diameter stainless steel strainer, cast iron body with 2" outlet and deep seal P-trap, trap guard, and clamping collar.
b. Approved Manufacturers:
1) Zurn No. ZN-415.
2) J.R. Smith No. 2010
3) Josam No. 30000-A
4) Wade No. 1100 Series
5) Mifab
6) Watts
2. (FD-2) Fixture:
a. 9” diameter cast iron strainer, sediment bucket, cast iron body with 3" outlet and deep seal P-trap, trap guard, and clamping collar.
b. Approved Manufacturers:
1) J.R. Smith No. 2210
2) Josam
3) Wade
4) Zurn
5) Mifab
6) Watts

I. Catch Basin:
1. (CB) Fixture: catch basin will be formed and poured with the floor. Contractor to coordinate inlet and/or outlet piping with forming. See details on plumbing drawings.

J. Roof Drains:
1. (RD) Fixture:
a. Cast iron body, bottom outlet, 12” diameter cast iron dome with locking screws, roof sump receiver, bearing pan, under deck clamp, extension as required. See plumbing plan for outlet sizes.
b. Approved Manufacturers:
1) Zurn No. Z-121

2) Wade
3) Josam
4) J.R. Smith
5) Mifab
6) Watts

K. Secondary (Emergency) Roof Drains:
1. (SRD) Fixture:
a. Same as RD, with exception of being provided with an external 2” high water dam as shown on the drawings, see architectural details.
b. Approved Manufacturers:
1) (See RD)

L. Downspout Nozzle:
1. (DSN) Fixture:
a. All nickel bronze body, optional threaded or no-hub inlet and decorative face of wall flange and outlet nozzle, removable stainless-steel screen.
b. Approved Manufacturers:
1) Zurn No. Z-199-SS
2) Wade
3) Josam
4) J.R.Smith
5) Mifab
6) Watts

M. Cleanouts:
1. Finished Floors:
a. Approved Manufacturers:
1) Zurn No. Z-1400-2
2) J.R. Smith No. 56010
3) Wade No. W-7000
4) Josam No. 56010
5) Mifab
6) Watts
2. Finished Walls:
a. Approved Manufacturers:
1) Zurn No. Z-1445-1
2) J.R. Smith No. 4530
3) Wade No. W-8460-R
4) Josam No. 58790
5) Mifab
6) Watts

N. Trim and Accessories:
1. Supplies and Stops:
a. Chrome plated cast brass angle stop, ball type quarter turn valve. Provide with flexible chrome plated copper riser, chrome plated escutcheon, compression type connections.
1) Approved Manufacturers:
2) Watts “Kwikstop”
3) Brass Craft KT Series
4) McGuire
5) ProFlo
2. P-Trap:
a. 17-gauge, tubular brass, chrome plated and chrome escutcheons.
b. Approved Manufacturers:

1) Dearborn
2) McGuire
3) Jameco
4) Zurn
5) ProFlo

3. Lavatory Pre-Formed Insulation and Protective Cover:
   a. Pre-formed foam or fiberglass insulation with two-piece white PVC snap on cover with velcro closure, to fit P-trap and hot and cold water stops and supplies, meet 25/50 flame/smoke rating.
   b. Approved Manufacturer:
      1) Truebro
      2) Plumberex
      3) ProFlo

PART III - PLUMBING FIXTURES

2.01 EXAMINATION:

A. Verify all dimensions by field measurements. Verify that all plumbing fixtures may be installed in accordance with pertinent codes and regulations, the original design, and the referenced standards.

B. Examine rough-in for potable water and waste piping systems to verify actual locations of piping connections prior to installing fixtures.

C. Examine floors, walls, and cabinets for suitable conditions where fixtures are to be installed.

D. Do not proceed with work until unsatisfactory conditions have been corrected in manner acceptable to Installer.

2.02 INSTALLATION:

A. Install plumbing fixtures level and plumb, in accordance with fixture manufacturer's written instructions, rough-in drawings, and pertinent codes and regulations, the original design, and the referenced standards.

B. Comply with the installation requirements of ANSI A117.1 and Public Law 90-480 with respect to plumbing fixtures for the physically handicapped.

C. Fasten plumbing fixtures securely to supports or building structure. Secure supplies behind or within wall construction to provide rigid installation.

D. Install a stop valve in an accessible location in the water connection to each fixture.

E. Install escutcheons at each wall, floor, and ceiling penetration in exposed finished locations and within cabinets and millwork.

F. Seal fixtures to walls and floors using silicone sealant. Match sealant color to fixture color.

2.03 FIELD QUALITY CONTROL:

A. Test fixtures to demonstrate proper operation upon completion of installation and after units are water pressurized. Replace malfunctioning units, the retest. Also test for rigidity of fixtures hung on carriers, flush valves, etc.

B. Inspect each installed unit for damage. Replace damaged fixtures.

2.04 ADJUSTING:

A. Adjust water pressure at drinking fountains, faucets and flush valves to provide proper flow stream.

B. Replace washers of leaking or dripping faucets and stops.

2.05 CLEANING:

A. Clean fixtures, trim, and strainers using manufacturer's recommended cleaning methods and materials.

2.06 PROTECTION:

A. Provide protective covering for installed fixtures, water coolers, and trim.

B. Do not allow use of fixtures for temporary facilities unless expressly approved in writing by the Company.

END OF SECTION 224000

SECTION 230000
GENERAL MECHANICAL REQUIREMENTS

PART I - GENERAL

1.01 RELATED DOCUMENTS:

A. Drawings and general provisions of the Contract, including General and Supplementary Conditions and Division 01 Specification sections, apply to work of this section.
   1. Sections of other Divisions which relate to mechanical work apply to the work of this section. See various Sections on sitework, underfloor work, structural work, finish materials, etc.

B. Related Sections: Refer to “Electrical Requirements for Mechanical Equipment” Section in Division 23 for basic electrical requirements for all mechanical equipment. Special and specific electrical requirements are specified within each respective equipment specification section.

1.02 SUMMARY:

A. This Section specifies the basic requirements for mechanical installations and includes requirements common to more than one section of Division 23. It expands and supplements the requirements of Division 01.
   1. This Division does not define, nor is it limited by, trade jurisdictions. All work described herein is a part of the General Contract and is required of the Contractor regardless.

1.03 DESCRIPTION OF PROJECT:

A. The mechanical work described in these mechanical specifications is for a project located at Davis Technical College in Kaysville, Utah. Design weather conditions are: 94 degF db, 61 degF wb, and winter 8 degF. Altitude readings, unless otherwise noted, are for an elevation of 4,360 feet above sea level. Make adjustment to manufacturer's performance data as needed.

1.04 CODES AND PERMITS, AUTHORITIES HAVING JURISDICTION:

A. The mechanical work shall be performed in strict accordance with the applicable provisions of the various codes, ordinances and adoptions pertaining to the project location in effect on the date of invitation for bids. All materials and labor necessary to comply with rules, regulations and ordinances shall be provided. Where the drawings and/or specifications indicate materials or construction in excess of code requirements, the drawings and/or specifications shall govern.

B. The Contractor shall hold and save the Owner and Architect/Engineer free and harmless from liability of any nature or kind arising from his failure to comply with codes and ordinances.

C. Permits necessary for the prosecution of the work under this contract shall be secured and paid for by the contractor(s) include connection fees related to utility hookups. Contractor shall include all sewer connection fees and shall verify current rate with Roosevelt City prior to bid.
   1. REFERENCE STANDARDS:
      a. American Welding Society
      b. International Mechanical Code/State Code
      c. International Building Code/State Code
      d. International Energy Conservation Code
      e. SMACNA Duct Design Standards
      f. Local/State Plumbing Code
      g. Locally enforced NFPA Codes
      h. Local Fuel Utility Regulations
      i. Local Power Utility Regulations
      j. American Gas Association
      k. ASME Codes for Pressure Vessels and Piping
      l. ANSI B31.1 Piping
   2. Final inspection by the Architect/Engineer will not be made nor Certificate of Substantial Completion issued until certificates of acceptability from the Authorities having jurisdiction are delivered.

1.05 DEFINITION OF PLANS AND SPECIFICATIONS:

A. The mechanical drawings at reduced scale show the general arrangement of piping, ductwork, equipment, etc., and shall be followed as closely as the actual building construction and the work of other trades will permit. The architectural and structural drawings shall be considered as part of the work insofar as these drawings furnish the Contractor with information relating to design and construction of the building. Architectural drawings shall take precedence over mechanical drawings. Request clarification and participate in resolution in the event of conflict.

1. Because of the small scale of the mechanical drawings, it is not possible to indicate all offsets, fittings and accessories which may be required. Investigate the structural and finish conditions affecting the work and arrange the work accordingly, providing such extensions, fittings, valves and accessories to meet the conditions as may be required. Some small scale work is not shown such as control conduit and piping, incidental piping, specialties. Provide as directed by note or specification.
2. Examine the actual construction site prior to bidding and obtain an understanding of the conditions under which the work will be performed. No allowances will be made for failure to make such examination.
3. During construction, verify the dimensions governing the mechanical work at the building. No extra compensation shall be claimed or allowed because of differences between actual dimensions and those indicated on the drawings. Examine adjoining work on which mechanical work is dependent for perfect efficiency, and report any work of other trades which must be corrected. No waiver of responsibility for defective work shall be claimed nor allowed due to failure to report unfavorable conditions affecting the mechanical work.

1.06 ROUGH-IN:

A. Verify final locations for rough-ins with field measurements and with the requirements of the actual equipment to be connected.

B. Refer to equipment specifications in Divisions 02 through 35 for rough-in requirements.

1.07 MECHANICAL INSTALLATIONS:

A. Coordinate mechanical equipment and materials installation with other building components.

B. Verify all dimensions by field measurements.

C. Arrange for chases, slots, and openings in other building components to allow for mechanical installations.

D. Coordinate the installation of required supporting devices and sleeves to be set in poured in place concrete and other structural components, as they are constructed.

E. Sequence, coordinate, and integrate installations of mechanical materials and equipment for efficient flow of the Work. Give particular attention to large equipment requiring positioning prior to closing-in the building.

F. Coordinate the cutting and patching of building components to accommodate installation of mechanical equipment and materials.

G. Where mounting heights are not detailed or dimensioned, install mechanical services and overhead equipment to provide the maximum headroom possible.

H. Install mechanical equipment to facilitate maintenance and repair or replacement of equipment components. As much as practical, connect equipment for ease of disconnecting, with minimum of interference with other installations.

I. Coordinate the installation of mechanical materials and equipment above ceilings with suspension systems, light fixtures, existing structures and other installations.

J. Coordinate connection of mechanical systems with exterior underground and overhead utilities and services. Comply with requirements of governing regulations, franchised service companies, and controlling agencies. Provide required connection for each service.

K. Where mechanical work penetrates other trade work such as gypboard walls, etc., penetration shall be neatly cut and walls shall be filled and patched.

L. All materials exposed within a return air plenum shall either be noncombustible or have a maximum flame spread index of 25 and a max smoke developed index of 50.

1.08 ACCESSIBILITY:

A. Install equipment and materials to provide required access for servicing and maintenance. Coordinate the final location of concealed equipment and devices requiring access with final location of required access panels and doors. Allow ample space for removal of all parts that require replacement or servicing.

B. Extend all grease fittings to an accessible location.

C. Establish required clearance to all installation features involving operation and maintenance. Respect manufacturers recommendations for access and clearance.

D. Access Doors - General: All items of mechanical equipment which may require adjustment, maintenance, replacement or which control a system function shall be made readily accessible to personnel operating the building.
   1. Provide access doors in all ductwork or plenums as required to maintain fire dampers, fire smoke dampers, equipment, controls or other elements of the system. Doors shall conform to SMACNA standards unless otherwise detailed or specified. Refer to Section 23 33 00 for sizes.
   2. Provide access doors in walls, ceiling and partitions to valves, cleanouts, chases, dampers, etc., and to access doors in ductwork requiring the same. Access doors shall be all-steel construction equivalent to "Milcor" by Inland Ryerson in a style approved by the Owner's Representative. Doors shall be 24" x 24" minimum, or larger as needed, with screwdriver latches.

1.09 CHANGE ORDERS: SEE GENERAL CONDITIONS.

1.10 ALTERNATIVE CONSTRUCTION/SUBSTITUTION:

A. These documents outline a way in which the Owner may be delivered a functional and reliable facility. Drawings and specifications describe reasonable engineering practice for the Contractor to follow.
   1. Coordination between trades may result in periodic needs to adjust the installation from that indicated, but in no case shall the intended function be compromised.
   2. The Contractor may perceive some work methods which differ from those specified which could save time and effort. These may be presented to the Architect with a breakdown of possible cost savings for review. Implement only with authorization.
   3. Materials substitutions will generally be covered in a review process prior to bidding. After bidding, substitutions shall be proposed only on the basis of definitive cost accounting and implemented only with authorization.

1.11 CUTTING AND PATCHING:

A. Lay out the project where new work is involved ahead of time, providing sleeves and blockouts, and have work specifically formed, poured and framed to accommodate mechanical installations. Cut and patch only as needed.

B. Refer to the Division 01 Section: CUTTING AND PATCHING for general requirements for cutting and patching.

C. Refer to Division 26 Section: BASIC ELECTRICAL REQUIREMENTS for requirements for cutting and patching electrical equipment, components, and materials.

D. Do not endanger or damage installed Work through procedures and processes of cutting and patching.

E. Arrange for repairs required to restore other and any work damaged as a result of mechanical installations.

F. No additional compensation will be authorized for cutting and patching Work that is necessitated by ill-timed, defective, or non-conforming installations.

G. Perform cutting, fitting, and patching of mechanical equipment and materials required to:
   1. Uncover Work to provide for installation of ill-timed Work;
   2. Remove and replace defective Work;
   3. Remove and replace Work not conforming to requirements of the Contract Documents;
   4. Remove samples of installed Work as specified for testing:
   5. Install equipment and materials in existing structures.

H. Upon written instructions from the Architect/Engineer, uncover and restore Work to provide for Architect/Engineer observation of concealed Work.

I. Cut, remove and legally dispose of selected mechanical equipment, components, and materials as indicated, including, but not limited to removal of mechanical piping and other mechanical items made obsolete by the new Work.

J. Protect the structure, furnishings, finishes, and adjacent materials not indicated or scheduled to be removed.

K. Provide and maintain temporary partitions or dust barriers adequate to prevent the spread of dust and dirt to adjacent areas.

1.12 SUBMITTALS:

A. Submittal of shop drawings, product data, and samples will be accepted only from the Contractor to the Architect. Data submitted from subcontractors and material suppliers directly to the Architect/Engineer will not be processed. Document each transmittal and sign and stamp the submittal indicating that it has been reviewed and is in compliance with the criteria of the project, any exceptions being clearly noted.
   1. Shop Drawings: As soon as possible after the contract is awarded, submit to the Architect, an electronic copy of the descriptive literature covering all equipment and materials to be used in the installation of mechanical systems for this project. Written confirmation of acceptable review by the Owner's Representative shall be obtained before ordering, purchasing, acquiring or installing any such equipment or materials for the project.
      a. Prepare the submittals in an orderly manner after the order of this specification, with identification tabs for each item or group of related items. Submittal shall be complete as one package. Single piece submittals will not be accepted. Submitted literature shall clearly indicate performance, quality, utility requirements, dimensions of size, connection points and other information pertinent to effective review.
      b. Equipment must fit into the available space with allowance for operation, maintenance, etc. The Contractor shall take full responsibility for space and utility requirements for equipment installed.
      c. Factory-wired equipment shall include shop drawings of all internal wiring to be furnished with unit.
      d. Review of the Architect/Engineer is for general conformance of the submitted equipment of the project specification; in no way does such approval relieve Contractor of his obligation to furnish equipment and materials that comply in detail to the specification, nor does it relieve the Contractor of his obligation to determine actual field dimensions and conditions which may affect his work.
   2. Record Drawings: During the course of construction, maintain a set of drawings, specifications, change orders, shop drawings, addenda, etc., for reference and upon which all deviations from the original layout are recorded. Turn these marked-up documents over to the Architect/Engineer at the conclusion of the work so that the original tracings can be revised. If the Contractor fails to mark up the prints, reimburse the Architect/Engineer for time required to do so.

1.13 OPERATION AND MAINTENANCE MANUALS AND TRAINING:

A. Refer to Section 230100.

1.14 GUARANTEE/WARRANTY:

A. The following guarantee is a part of this specification and is binding on the part of the Contractor and his assigns:
   1. "Contractor guarantees that this installation is in accordance with the terms of the Contract and is free from mechanical defects. He agrees to replace or repair, to the satisfaction of the Owner's Representative, any part of this installation which may fail or be determined unacceptable within a period of one (1) year after final acceptance. See also the General Conditions of these specifications. Failed equipment in the repair or replacement shall be guaranteed for one full year from the date of recommission."
   2. Compile and assemble the warranties required by Division 23 into a separated set of vinyl covered, insert sheets, tabulated and indexed for each reference, included in the O & M Manual.
   3. Provide complete warranty information for each item to include product or equipment to include date of beginning of warranty or bond; duration of warranty or bond; and names, addresses, and telephone numbers and procedures for filing a claim and obtaining warranty services.
   4. Mechanical systems and equipment shall not be considered for substantial completion and initiation of warranty until they have performed in service continuously without malfunction for at least thirty (30) working days.

1.15 TESTS AND CERTIFICATIONS:

A. Make all tests required by code or specification in the presence of a representative of the Owner, with tests recorded and certified by the Contractor and Representative. Involve local authorities where required.

1.16 PERMITS, FEES, LICENSES: REFER TO GENERAL CONDITIONS. SEE PARAGRAPH 1.4.

1.17 CEILING SPACE COORDINATION:

A. Carefully coordinate ceiling cavity space with all trades; however, installation of mechanical equipment within the ceiling cavity space allocation, in the event of conflict, shall be in the following order: plumbing waste lines; supply, return and exhaust ductwork; domestic hot and cold water; fire protection; control conduit. Respect clearances required for lights, electrical conduits, protected structure, etc. All spaces above any and all ceilings shall be defined and considered as return air plenum space.

1.18 MECHANICAL COORDINATION DRAWINGS:

A. For congested areas, or areas of great detail, prepare and submit a set of coordination drawings showing major elements, components and systems of mechanical equipment and materials in relationship with other building components (structure, fire sprinkler, electrical, etc.). Prepare drawings to an accurate scale of 1/4" - 1-0" or larger. Indicate the locations of all equipment and materials, including clearances for installing and maintaining equipment, servicing and maintaining equipment, valve stem movement, and similar requirements. Indicate movement and positioning of large equipment into the building during construction.
   1. Prepare floor plans, roof plans, reflected ceiling plans, elevations, sections and details to conclusively coordinate and integrate all installations. Indicate locations where space is limited, and where sequencing and coordination of installations are of importance to the efficient flow of the work, including (but not necessarily limited to) the following:

ROOFTOP EQUIPMENT

1.
   a. Packaged rooftop units.
   b. Packaged make-up air units
   c. Evaporative coolers
   d. Rooftop Exhaust fans
   e. Split Air conditioning units
   f. Piping

g. Specialty systems.
h. Electrical installations.
i. Related structure.

2. Work in pipe spaces, chases, trenches, and tunnels.
3. Exterior wall and roof penetrations.
4. Ceiling plenums which contain piping, ductwork, or equipment in congested arrangement. To include structure, ductwork, piping, fire protection, large electrical conduit, recessed lights, etc.
5. Installations in mechanical riser shafts, at typical sections and crucial offsets and junctures.
6. Numbered valve location diagrams.
7. Manifold piping for multiple equipment units.
8. General floor plan layouts with ductwork, piping, lighting, structure, etc.
9. Use drawings to coordinate all affected trades. Do not work without coordinated drawings.

2.02 SCHEDULING/METHODS OF PROCEDURE:

A. Where interruptions of service are needed to effect work of this contract, outline the work, coordinate with other trades, determine the Owners acceptable downtime and prepare a time based schedule to accomplish the work. Give notice of a necessary utility interruption (or shutdown) to any existing system to the owner’s construction coordinator not less than 72 hours prior to the proposed shutdown. This will then be coordinated with the Campus Utility Services Department and the campus areas involved for approval to go ahead with the shutdown or re-schedule. Set up for evening, nighttime or weekend hours as necessary to accomplish the work with minimum disruption.

PART II - GENERAL MECHANICAL MATERIALS AND METHODS

3.01 QUALITY OF MATERIALS AND EQUIPMENT:

a. All equipment and materials shall be new, except for the noted existing equipment being relocated and shall be the standard products of manufacturers regularly engaged in the production of plumbing, heating, ventilating and air conditioning equipment, and shall be the manufacturer's latest design. Specific equipment shown in schedules on drawings and specified herein is to be the basis for the Contractor's bid. Provisions for substitute equipment are outlined in the General Conditions. All materials shall be produced by manufacturing plants located in the United States of America.

B. Furnish and install all major items of equipment specified in the equipment schedules on the drawings complete with all accessories normally supplied with catalog items listed, and all other accessories necessary for a complete and satisfactory installation.

3.02 PROTECTION OF MATERIALS AND EQUIPMENT:

A. Close pipe and duct openings with caps or plugs to prevent lodgement of dirt or trash during the course of installation. Cover equipment tightly and protect against dirt, water and chemical or mechanical injury. Plumbing fixtures intended for the final installation shall not be used by the construction forces. At the completion of the work, clean fixtures, equipment and materials and polish thoroughly and deliver in a factory dock condition for the Owner's acceptance. Make damage and defects developing before acceptance of the work good at Contractor's expense.

B. Do not make temporary use of project equipment, new or existing, during construction without the written consent of the owner. SYSTEMS SHALL NOT BE USED FOR TEMPORARY HEAT.

3.03 QUALIFICATIONS OF WORKMEN:

A. All mechanics shall be capable journeymen, skilled in the work assigned to them. Apprentices may be used with appropriate direction.

B. Employ no unskilled persons in the work which he is given to do; execute all work in a skillful and workmanlike manner. All persons employed upon this work shall be competent, faithful,

orderly and satisfactory to the Owner. Should the Owner's Representative deem anyone employed on the work incompetent or unfit for his duties, and so certify, Contractor shall dismiss him and he shall not be again employed upon the work without permission of the Owner's Representative.

C. All welders involved in welding of pressure piping systems shall be certified in accordance with Section IX of the ASME Boiler and Pressure Vessel Code. Written verification of successful test completion shall be submitted to Architect prior to initiating work.

3.04 FOREMAN:

A. Dedicate and designate a full-time general mechanical foreman to the Owner's Representative to be consistently available on site during the life of the project for consultation. Do not replace this individual without prior approval from the Owner's Representative.

3.05 USE OF COMMON VENDORS:

A. Regardless of subcontract delegations, coordinate purchasing between trades so that equipment and materials of similar nature come from a single vendor, i.e., all packaged HVAC equipment shall be common source. Speed drives, etc., the same. Do not burden the Owner with multiple brands of similar equipment unless so directed.

3.06 ROOF/WALL PENETRATIONS - FLASHINGS:

A. Let pipe sleeves allow for movement of the pipe due to expansion and contraction, yet to include seismic restraint.

B. Refer to Section “FIRE STOPPING” for requirements.

3.07 EXCAVATING AND BACKFILLING (GENERAL):

A. Provide all excavation, trenching and backfilling for Division 23 underground piping work. Excavation and backfilling shall comply with applicable paragraphs of Division 31. Tamp bottoms of trenches hard and, for soil and waste piping, grade to secure uniform fall of 1/4" per foot, or as noted. Excavate bell holes for hub and spigot pipes so that pipe rests on solid ground for its entire length. Lay sewer and water pipe in separate trenches, except where otherwise noted, as detailed.

B. After work has been tested, inspected and approved by the Owner's Representative and/or State/Local Inspector, and prior to backfilling, clean the excavation of all rubbish, and clean backfill materials free of trash. Place backfill in horizontal layers not exceeding 12" in thickness, properly moistened. Mechanically compact each layer with suitable equipment to a dry density of not less than 95 percent as determined by the Modified AASHO Test T-18O. See Division 31 for additional requirements.

1. Provide adequate shoring to safeguard workers from cave-ins for all excavations.
2. In areas where General Contractor has finish grade work to do, Mechanical Contractor shall backfill and compact to 8" below finish grade. Where no finish surface work is to be done, Mechanical Contractor shall backfill and compact to and match adjacent undisturbed surface with allowance for settling, etc.
3. Protect from damage all existing underground utilities or utility tunnels indicated on the contract drawings (or field located for the Contractor by the Owner prior to excavation operations). Any damage to identified existing utilities or utility tunnels shall be repaired by the Contractor at no cost to the Owner.

3.08 HANGERS AND SUPPORTS (GENERAL):

A. Provide hangers and/or supports for all equipment, piping and ductwork. Primary information is contained in these specifications and on the drawings.

B. Provide hangers and supports to correlate with seismic restraint and vibration isolation.

3.09 MANUFACTURER'S DIRECTIONS:

A. Install all equipment in strict accordance with directions and recommendations furnished by the manufacturer. Where such directions are in conflict with the plans and specifications, report

such conflicts to the Architect who shall direct adjustments as deemed necessary and desirable.

3.10 LUBRICATION:

A. Lubricate equipment at startup. Then, provide all lubricants for the operation of all equipment until acceptance by the Owner. The Contractor is held responsible for all damage to equipment and bearings while the equipment is being operated by him consequent to preacceptance operation.

3.11 ELECTRICAL WIRING AND CONTROL:

A. In general, motor starters, related motor starter equipment and power wiring indicated on the electrical drawings and control diagrams are to be furnished and installed under Division 26 of this Specification. Items of electrical control equipment specifically mentioned to be furnished by the Division 23 either in these specifications or on the electrical or mechanical drawings, shall be furnished and mounted by this Contractor and shall be connected under and as required by this Division 23 and Division 26 of these specifications.

B. Refer to the control equipment and wiring shown on the diagrams. Any changes or additions required by specific equipment furnished shall be the complete responsibility of the contractor.

C. Division must be fully coordinated with Division 26 to insure that all required components of the work are included and fully understood. No additional cost shall accrue to the Owner as a result of lack of coordination.

D. Where the detailed electrical work is not shown on the electrical drawings, the Mechanical Contractor shall furnish, install and wire or have prewired all specified and necessary controls for air handling equipment specified for this project. The objective of this paragraph is to make sure a complete operating system is obtained at no additional cost to the Owner for field wiring required related to the equipment.

3.12 FLUSHING AND DRAINING OF SYSTEMS/CLEANING OF PIPING AND DUCTS:

A. Fill, clean and flush and sterilize where appropriate, all water piping systems with water and drain these systems before they are placed in operation. Flushings shall consist of not less than six (6) short, intermittent flushes of five (5) to ten (10) minutes duration. Sample and test each flush for cleanliness. Blow out all other piping systems with compressed air or nitrogen to remove foreign materials that may have been left or deposited in the piping system during its erection. Duct systems shall have all debris removed and fans shall be run to blow out all dust and foreign matter before grilles, outlets or mixing boxes are installed and connected.
   1. Damp wipe all ductwork on installation, cap open ducts, cover fan inlets, vacuum fan plenums and related installation before starting fans. Run fans only with filters in place.

3.13 JOBSITE CLEANUP:

A. Keep site clean during progress of work.

B. At the conclusion of work, clean all installation thoroughly.
   1. Leave equipment in a factory dock condition. Correct any damage and touch up or repaint if necessary.
   2. Remove all debris from site.

3.14 ARCHITECTURAL ACCESS DOORS:

A. Extent of Work: Provide architectural grade access doors at each point of required access to duct features, piping valves, and specialties, concealed equipment, etc. Coordinate this work with other sections for ceilings, walls, etc.

B. Material: Steel framed doors with heavy duty hinges and latch type locking mechanisms with surface finish configuration to accept, match or correlate with adjacent surface.
   1. Product equivalent to Inland-Ryerson “Milcor”, Cesco
   2. Size adequate to access point of maintenance, to work on and remove concealed devices and equipment.

C. Installation: Complete, blended into adjacent work.

END OF SECTION 230000

This page intentionally left blank

SECTION 230100
OPERATION AND MAINTENANCE MANUALS

PART 1 - GENERAL

1.01 RELATED DOCUMENTS:

A. Drawings and general provisions of Contract, including General and Supplementary Conditions and Division 01 Specifications sections, apply to work of this section.

B. Division-23 General Mechanical Requirements sections apply to work of this section.

1.02 SUMMARY:

A. Furnish four discs or thumb drives of the operation and maintenance manuals. Manuals shall contain descriptive drawings and data which identify equipment installed at the project and detail the procedures and parts required to maintain and repair the equipment. Copies of approved submittals shall be included for all equipment.

1.03 OPERATION AND MAINTENANCE MANUAL FOR MECHANICAL SYSTEMS:

A. General:
   1. The "Operating and Maintenance Manual" is a compilation of drawings and data that the owner requires for each building or project. These discs or thumb drives, including copies of drawings and data, shall be furnished to Davis Technical College.
   2. The mechanical contractor has overall responsibility to obtain the necessary data and compile the data as set forth in this specification, including items or equipment purchased by the owner and delivered to the contractor for installation.
   3. Make all information legible and sufficiently marked to indicate the exact size, model, type, etc., of equipment furnished and installed.

B. Purpose: The Operating and Maintenance Manual is prepared to provide a ready reference to all important pieces of mechanical and electrical equipment installed on the project. It is also to provide the necessary operating and maintenance data for use by service personnel. It is also to provide information required for checking equipment performance or for planning of plant expansion or redesign.

PART II - MATERIALS AND METHODS

2.01 PAGE SIZE:

A. All pages shall be standard 8-1/2 x 11 inches size or approximate multiples (preferably 16 x 11 inches)

2.02 DRAWINGS:

A. All drawings larger than 8-1/2" x 11" shall be electronically copied with the scale noted where appropriate.
   1. The following information shall be included on the first page:
      a. "Operation and Maintenance Manual".
      b. Project Name (and volume number if more than one volume).
      c. Project Number (Seven Digit University project number).
      d. Building name and number.
      e. Davis Technical College.
      f. Architect's name.
      g. Engineer's name.
      h. General Contractor's name.
      i. Mechanical Contractor's name.
      j. Items 6 through 8 need not be printed on the backbone.

2.03 CONTENTS AND INDEXING:

A. Manuals shall contain descriptions of the building systems in sufficient detail to adequately indicate the type of systems installed and the basic details of their operation.

B. All purchased equipment data shall be used to designate the sections. Within each section additional indexing of component parts may be required.

C. Operation and Maintenance Manuals shall contain to the fullest extent all possible information pertinent to the equipment. The arrangement and type of information to be filed shall be as follows:
   1. Copy of purchase order change (if any).
   2. Outline drawings, special construction details, “as built” electrical wiring and control diagrams for all major and supplementary systems.
   3. Manufacturer’s test or calculated performance data and certified test curves.
   4. Installation, operating, and maintenance instructions, including a complete parts list and sectional drawing with parts identification numbers. Mark with model, size and plan number.
   5. Manufacturer’s brochure marked to indicate exact equipment purchased. Brochures on component parts supplied by a manufacturer with his equipment, but not manufactured directly by him, shall also be included.
   6. The serial numbers of each item of equipment installed are to be listed with the model numbers and plan symbols.
   7. Include a Table of Contents. The contents shall be divided with tabbed index dividers into the following suggested parts:
      a. Building and System Descriptions
      b. Purchased Equipment Data
      c. Test Reports and Valve Charts
      d. Start-Up and Operation
      e. Preventative Maintenance Recommendations
   8. A copy of the approved submittals for each piece of equipment.
   9. A copy of all testing, adjusting and balancing reports.
   10. Wiring diagrams, marked with model and size and plan symbol.
   11. The index shall contain the name and address of the manufacturer and, if different, where replacement and repair parts may be obtained.

PART III - EXCECUTION

3.01 OPERATING AND MAINTENANCE MANUALS

A. Work under this section shall be performed in concert with the contractor performing the system testing and balancing.

B. Two (2) copies of the manuals shall be furnished to the Architect for distribution to the owner.

C. In addition to the hard copies provide an electronic copy, on flash drive of the O&M manual in PDF format. Indexed, bookmarked and searchable.

D. The "Start-Up and Operation" section is one of the most important in the manual. Information in this section shall be complete and accurately written and shall be verified with the actual equipment on the job, such as switches, starters, relays, automatic controls, etc. A step-by-step start-up procedure shall be described.

E. The manuals shall include air and water-balancing reports, system commissioning procedures, start-up tests and reports, equipment and system performance test reports, warranties, and certificates of training given to the owner’s representatives.

END OF SECTION 230100

SECTION 230505
MECHANICAL FIRESTOPPING

PART I - GENERAL

1.01 RELATED DOCUMENTS:

A. Related Documents: Drawings and general provisions of the Contract, including General and Supplementary Conditions and General Conditions Specification Sections, apply to this section.

1.02 SUMMARY:

A. Penetrations through fire-resistance-rated floor construction including openings containing wires/cables, pipes, ducts, conduits, and other penetrating items.

B. Penetrations through fire-resistance-rated walls and partitions including openings containing wires/cables, pipes, ducts, control conduits, and other penetrating items.

1.03 SYSTEM PERFORMANCE REQUIREMENTS:

A. General: Provide firestopping systems that are produced and installed to resist the spread of fire, according to requirements indicated, and the passage of smoke and other gases.

B. F-Rated Through-Penetration Firestop Systems: Provide through-penetration firestop systems with F ratings indicated, as determined per ASTM E 814, but not less than that equaling or exceeding the fire-resistance rating of the constructions penetrated.

C. T-Rated Through-Penetration Firestop Systems: Provide through-penetration firestop systems with T ratings, in addition to F ratings, as determined per ASTM E 814, where indicated and where systems protect penetrating items exposed to contact with adjacent materials in occupiable floor areas. T-rated assemblies are required where the following conditions exist:
   1. Where firestop systems protect penetrations located outside of wall cavities.
   2. Where firestop systems protect penetrations located outside fire-resistive shaft enclosures.
   3. Where firestop systems protect penetrating items larger than a 4-inch diameter nominal pipe or 16 square inch in overall cross-sectional area.

D. Fire-Resistive Joint Sealants: Provide joint sealants with fire-resistance ratings indicated, as determined per ASTM E 119, but not less than that equaling or exceeding the fire-resistance rating of the construction in which the joint occurs.

E. For firestopping exposed to view, traffic, moisture, and physical damage, provide products that do not deteriorate when exposed to these conditions.
   1. For piping penetrations for plumbing and wet-pipe sprinkler systems, provide moisture-resistant through-penetration firestop systems.
   2. For floor penetrations with annular spaces exceeding 4 inches or more in width and exposed to possible loading and traffic.

1.04 SUBMITTALS:

A. General: Submit the following according to Conditions of Contract and General Conditions Specification Sections.

B. Product data for each type of product specified.
   1. Certification by firestopping manufacturer that products supplied comply with local regulations controlling use of volatile organic compounds (VOCs) and are nontoxic to building occupants.

C. Product certificates signed by manufacturers of firestopping products certifying that their products comply with specified requirements.

D. Product test reports from, and based on tests performed by, a qualified testing and inspecting agency evidencing compliance of firestopping with requirements based on comprehensive testing of current products.

1.05 QUALITY ASSURANCE:

A. Fire-Test-Response Characteristics: Provide firestopping that complies with the following requirements and those specified under the “System Performance Requirements” article:
   1. Firestopping tests are performed by a qualified testing and inspecting agency. A qualified testing and inspecting agency is UL, Warnock Hersey, or another agency performing testing and follow-up inspection services for firestop systems that is acceptable to authorities having jurisdiction.
   2. Through-penetration firestop systems are identical to those tested per ASTM E 814 under conditions where positive furnace pressure differential of at least 0.01 inch of water is maintained at a distance of 0.78 inch below the fill materials surrounding the penetrating items in the test assembly. Provide rated systems complying with the following requirements.
      a. Through-penetration firestop system products bear classification marking of qualified testing and inspecting agency.
      b. Through-penetration firestop systems correspond to those indicated by reference to through-penetration firestop system designations listed by UL in their “Fire Resistance Directory,” by Warnock Hersey, or by another qualified testing and inspecting agency.

B. Information on drawings referring to specific design designations of through-penetration firestop systems is intended to establish requirements for performance based on conditions that are expected to exist during installation. Any changes in conditions and designated systems require the Architect’s prior approval. Submit documentation showing that the performance of proposed substitutions equals or exceeds that of the systems they would replace and are acceptable to authorities having jurisdiction.

C. Installer Qualifications: Engage an experience installer who has completed firestopping that is similar in material, design, and extent to that indicated for the project and that has performed successfully.

D. Single-Source Responsibility: Obtain through-penetration firestop systems for each kind of penetration and construction condition indicated from a single manufacturer.

E. Provide firestopping products containing no detectable asbestos as determined by the method specified in 40 CFR Part 763, Subpart F, Appendix A, Section 1, “Polarized Light Microscopy.”

F. Coordinating Work: Coordinate construction of openings and penetrating items to ensure that designated through-penetration firestop systems are installed per specified requirements.

1.06 DELIVERY, STORAGE AND HANDLING:

A. Deliver firestopping products to project site in original, unopened containers or packages with intact and legible manufacturers’ labels identifying product and manufacturer; date of manufacture; lot number; shelf life, if applicable; qualified testing and inspecting agency’s classification marking applicable to project; curing time; and mixing instructions for multi-component materials.

B. Store and handle firestopping materials to prevent their deterioration or damage due to moisture, temperature changes, contaminants, or other causes.

1.07 PROJECT CONDITIONS:

A. Environmental Conditions: Do not install firestopping when ambient or substrate temperatures are outside limits permitted by firestopping manufacturers or when substrates are wet due to rain, frost, condensation, or other causes.

B. Ventilation: Ventilate firestopping per firestopping manufacturer’s instructions by natural means or, where this is inadequate, forced air circulation.

1.08 FIRESTOPPING - GENERAL:

A. Compatibility: Provide firestopping composed of components that are compatible with each other, the substrates forming openings, and the items, if any, penetrating the firestopping under

conditions of service and application, as demonstrated by firestopping manufacturer based on testing and field experience.

B. Accessories: Provide components for each firestopping system that are needed to install fill materials and to comply with “System Performance Requirements” article in Part 1. Use only components specified by the firestopping manufacturer and approved by the qualified testing and inspecting agency for the designated fire-resistance-rated systems. Accessories include but are not limited to the following items:
   1. Permanent forming/damming/backing materials including the following:
      a. Semi-refractory fiber (mineral wool) insulation.
      b. Ceramic fiber.
      c. Sealants used in combination with other forming/damming materials to prevent leakage of fill materials in liquid state.
      d. Fire-rated formboard.
      e. Joint fillers for joint sealants.
   2. Temporary forming materials.
   3. Substrate primers.
   4. Collars.
   5. Steel sleeves.

C. Applications: Provide firestopping systems composed of materials specified in this section that comply with system performance and other requirements.

1.09 FILL MATERIALS FOR THROUGH-PENETRATION FIRESTOP SYSTEMS:

A. Intumescent, Latex Sealant: Single-component, intumescent, latex formulation.

B. Intumescent Putty: Non-hardening, dielectric, water-resistant putty containing no solvents, inorganic fibers, or silicone compounds.

C. Intumescent Wrap Strips: Single-component, elastomeric sheet with aluminum foil on one side.

D. Solvent-Release-Curing Intumescent Sealant: Solvent-release-curing, single-component, synthetic-polymer-based sealant.

E. Intumescent Metal-Faced Sheets: Single-component, intumescent sheet with 28-gauge steel bonded to one side.

F. Products: Subject to compliance with requirements, provide one of the following:
   1. Intumescent Latex Sealant:
      a. Fire Barrier CP 25WB Caulk, 3M Fire Protection Products.
   2. Intumescent Putty:
      a. Fire Barrier Moldable Putty, 3M Fire Protection Products.
   3. Intumescent Wrap Strips:
      a. Fire Barrier FS-195 Wrap/Strip, 3M Fire Protection Products.
   4. Solvent-Release-Curing Intumescent Sealants:
      a. Fire Barrier CP 25N/S Caulk, 3M Fire Protection Products.
      b. Fire Barrier CP 25S/L Caulk, 3M Fire Protection Products.
   5. Intumescent Metal-Faced Sheets:
      a. 3M Fire Barrier Composite Sheet CS195, 3M Fire Protection Products.

1.10 EXAMINATION:

A. Examine substrates and conditions, with Installer present, for compliance with requirements for opening configurations, penetrating items, substrates, and other conditions affecting performance of firestopping. Do not proceed with installation until unsatisfactory conditions have been corrected.

1.11 PREPARATION:

A. Surface Cleaning: Clean out openings and joints immediately prior to installing firestopping to comply with recommendations of firestopping manufacturer and the following requirements:

1. Remove all foreign materials from surfaces of opening and joint substrates and from penetrating items that could interfere with adhesion of firestopping.
2. Clean opening and joint substrates and penetrating items to produce clean, sound surfaces capable of developing optimum bond with firestopping. Remove loose particles remaining from cleaning operation.

B. Priming: Prime substrates where recommended by firestopping manufacturer using that manufacturer's recommended products and methods. Confine primers to areas of bond; do not allow spillage and migration onto exposed surfaces.

1.12 INSTALLING THROUGH-PENETRATION FIRESTOPS:

A. General: Comply with the "System Performance Requirements" article in Part 1 and the through-penetration firestop manufacturer's installation instructions and drawings pertaining to products and applications indicated.

B. Install forming/damming materials and other accessories of types required to support fill materials during their application and in the position needed to produce the cross-sectional shapes and depths required to achieve fire ratings of designated through-penetration firestop systems. After installing fill materials, remove combustible forming materials and other accessories not indicated as permanent components of firestop systems.

C. Install fill materials for through-penetration firestop systems by proven techniques to produce the following results:
1. Completely fill voids and cavities formed by openings, forming materials, accessories, and penetrating items.
2. Apply materials so they contact and adhere to substrates formed by openings and penetrating items.

1.13 CLEANING:

A. Clean off excess fill materials and sealants adjacent to openings and joints as work progresses by methods and with cleaning materials approved by manufacturers of firestopping products and of products in which opening and joints occur.

B. Protect firestopping during and after curing period from contact with contaminating substances or from damage resulting from construction operations or other causes so that they are without deterioration or damage at time of Substantial Completion. If, despite such protection, damage or deterioration occurs, cut out and remove damaged or deteriorated firestopping immediately and install new materials to produce firestopping complying with specified requirements.

END OF SECTION 230505

SECTION 230513
MOTORS, DRIVES AND ELECTRICAL REQUIREMENTS FOR MECHANICAL WORK

PART I - GENERAL

1.01 REFERENCE STANDARDS

A. UL 508 - Industrial Control Equipment; Current Edition, Including All Revisions.

1.02 RELATED DOCUMENTS:

A. Drawings and general provisions of the Contract, including General and Supplementary Conditions and Division 01 Specification sections, apply to work of this section.

B. Related Sections: Separate electrical components and materials required for field installation and electrical connections are specified in Division 26.

1.03 SUMMARY:

A. This section specifies the basic requirements for motors and drives furnished by this Division and for electrical components which are an integral part of packaged mechanical equipment. Package components include, but are not limited to factory installed motors, starters, and disconnect switches, etc.

B. Specific electrical requirements (i.e. horsepower and electrical characteristics) for mechanical equipment are noted within these documents.

1.04 QUALITY ASSURANCE:

A. Provide electrical components and materials which are UL labeled.

B. Provide variable speed drives which conform to the latest standard of the following:
   1. IEEE - Institute of Electrical and Electronic Engineers.
   2. NEC - National Electrical Code.
   3. NEMA - National Electrical Manufacturers Association.
   4. Provide complete packaged unit(s) which are listed and carry the label of at least one of the following:
      a. UL - Underwriters Laboratory
      b. ETL - ETL Testing Laboratories, Inc.
      c. CSA - Canadian Standards Association

1.05 SUBMITTALS:

A. Submit complete product and application information for variable speed drives as follows:
   1. Provide multiple sets of drawings of system (VFD) being supplied, in strict compliance with the specifications. Include, as a minimum:
      a. General arrangement of each unit showing size and incoming and outgoing conduit locations.
      b. Schematic diagrams and drawings.
      c. Connection diagram, sufficient to install drive system.
   2. Provide each unit with four owner/maintenance manuals which shall include:
      a. Vendor information of equipment being supplied.
      b. Connection information.
      c. Start-up procedure.
      d. Fault reset instruction.
      e. Wiring diagrams (power and control).
      f. Parts list.
      g. Test results.
      h. Harmonic voltage distortion on line with unit off.
      i. Harmonic voltage distortion with unit on line.

B. Submit product data for motors, belts, drives, starters, and other electrical components with submittal data required for the equipment for which it serves, as required by the individual

equipment specification sections. Verify project electrical characteristics with submittal. Confirm suitability for altitude, maintaining full nameplate rating plus service factor. Include this data in maintenance manual in accordance with Section "Operation and Maintenance Manuals".

1.06 REFERENCES:

A. NEMA Standards MG 1: Motors and Generators.

B. NEMA Standards ICS 2: Industrial Control Devices, Controllers, and Assemblies.

C. NEMA Standards 250: Enclosures for Electrical Equipment.

D. NEMA Standards KS 1: Enclosed Switches.

E. IEEE Standard 519: Recommended Practices and Requirements for Harmonic Control in Electrical Power Systems.

F. Comply with National Electrical Code (((NFPA 70))).

1.07 WARRANTY:

A. General: For variable frequency drives. Furnish a written warranty consisting of the following:
   1. Warranty parts and labor for five years after substantial completion.

PART II - PRODUCTS

2.01 MOTORS:

A. Motor scheduled for connection to variable frequency drives shall be invertor duty rated.

B. The following are basic requirements for simple or common motors. For special motors, more detailed and specific requirements are specified in the individual equipment specifications.
   1. Torque characteristics shall be sufficient to satisfactorily accelerate the driven loads.
   2. Motor sizes large enough so that the driven load will not require the motor to operate in the service factor range.
   3. Two-speed motors with 2 separate windings for poly-phase motors. Confirm 2-speed starter requirements with Division 26.
   4. Single speed motors of the permanent split capacitor type. (PSC)
   5. Temperature Rating: Minimum rate for 40oC environment with maximum 90oC temperature rise for continuous duty at full load (Class H Insulation for altitude, Class B leads allowed).
   6. Starting Capability: Frequency of starts as indicated by automatic control system, and not less than 5 evenly timed spaced starts per hour for manually controlled motors.
   7. Service Factor: 1.15 for poly-phase motors and 1.35 for single phase motors, 1.0 for TEFC motors.
   8. Pump motors with an end shield with ventilation openings beneath the motor.
   9. Motor Construction: NEMA Standard MG 1, general Purpose, continuous duty, design "B", except "C" where required for high starting torque.
   10. Frames: NEMA Standard No. 48 or 54; T-frame, use driven equipment manufacturer's standards to suit specific application.
   11. Bearings:
      a. Ball or roller bearings with inner and outer shaft seals;
      b. Re-greasable, except permanently sealed where motor is normally inaccessible for regular maintenance;
      c. Designed to resist thrust loading where belt drives or other drives produce lateral or axial thrust in motor;
      d. For fractional horsepower, light duty motors, sleeve type bearings are permitted;
   12. Enclosure Type:
      a. Open drip-proof motors for indoor use where satisfactorily housed or remotely located during operation;

b. Guarded drip-proof motors where exposed to contact by employees or building occupants;
c. Weather protected type I for outdoor use, Type II where not housed;

13. Overload Protection: built-in thermal overload protection and, where indicated, internal sensing device suitable for signaling and stopping motor at starter.
14. Noise Rating: "Quiet"
15. Efficiency: "Premium Energy Efficient" motors shall have a minimum efficiency as scheduled in accordance with IEEE Standard 112, test method B. If efficiency not specified, motors shall have a higher efficiency than "average standard industry motors", in accordance with IEEE Standard 112. Motors used with Variable Frequency Drives shall be compatible and designed for use with Variable Frequency Drives. Any “explosion proof” motor for classified areas, scheduled for use with VFD’s, shall be listed for invertor duty applications.
16. Nameplate: indicate the full identification of manufacturer. ratings, characteristics, construction, special features and similar information.
17. Shaft grounding rings shall be provided for any motor with a variable frequency drive applied.
18. Acceptable Manufacturers: Baldor (Preferred), Century, General Electric, Lincoln, Marathon, U.S. Motors.

2.02 MOTOR DRIVES:

A. Provide fan/motor drives with cast steel sheaves and V-belt sets of fabric and rubber construction by Browning, Dodge, Woods. Match multiple belts and adjust to drive the apparatus properly and to prevent slippage and undue wear in starting. Design drives for 150 percent or more of the specified motor nameplate rating. Bush all drives. Belts shall be A, B or C section belts. Narrow gauge belts are not acceptable. Adjust drives or replace sheaves as needed to obtain required capacities.

B. Provide flexible coupled drives for pumps by Browning, Dodge or Woods.

C. Provide a galvanized iron metal guard for each V-belt drive, coupled drive or rotating shaft constructed around an angle iron frame, securely bolted to the floor or apparatus. Design the guard to completely enclose drives and pulleys and be constructed to comply with all safety requirements. Provide hinged access doors not less than 6" x 6" for access to motor and fan shaft for test purposes. For double inlet fans, construct the belt guard cover of 1/2" mesh expanded metal, arranged as not to restrict the air flow into the fan inlet.

2.03 VARIABLE FREQUENCY DRIVES:

A. General: Furnish and install Variable Frequency Drives (motor speed controllers) with associated control signal components, harmonic filtering, power factor compensation and related cabinets, devices, ventilation, etc. Sizes and capacity as schedule on the drawings. Rate drives for constant torque application with variable torque application capability. Drive shall be warrantied for parts and labor for 18 months after substantial completion. Drives shall be wired for full VFD rating. This specification pertains to factory Installed VFD’s in packaged equipment, such as RTU and MAU’s, VFD’s for REF’s are by Division 26.

1. Verify compatibility of each VFD System being supplied with the related equipment motor. If a new motor is being supplied supply the VFD to match the new motor(s) and warranty the Drive to be compatible with that motor.
2. Furnish each system in a NEMA 1 enclosure either wall-mounted or free standing, with fan forced, filtered ventilation.
3. Furnish each system with silk screened or engraved labels on all door operator and pilot devices, attached with screws, rivets or adhesive.
4. Provide an electrical shock warning label on each system to warn personnel that a potential of electric shock exists.
5. Supply each system complete, wired with all components assembled in a single enclosure including, but not limited to the VFD units, contactors, door interlocked circuit breaker.

Units requiring mounting and inter-wiring of separate bypass enclosure are not under this specification.

6. Supply a complete set of engineering drawings consisting of, as a minimum, general arrangement, power wiring diagram, control wiring diagram and schematic of VFD System components, options, and equipment and tests included to meet power quality requirements of the specification.
7. Furnish an owner's manual consisting of catalog sheets showing actual components and parts numbers. Manual shall also show test certificates, warranty and service personnel responsible for warranty.
8. Furnish factory trained VFD System installation and start-up and warranty service. Mount unit and connect to power supply, mount and wire remote devices.

B. Construction: Assemble the Variable Frequency Drive units and components in a NEMA 1 enclosure.
1. Each Variable Frequency Drive inverter shall be altitude compensated and sized for the elevation at which the unit will be installed. The inverter shall operate in an ambient temperature of -10°C to 50°C and a humidity of 0 to 90 percent non-condensing.
2. Mount each Variable Frequency Drive inverter unit on a removable panel along with all other components such that, if required, the panel can be removed from the enclosure for maintenance or part replacement.
3. Mount the door with a minimum of two hinges with removable pins. Door shall be rigid and large doors shall have additional hinges and stiffening steel.
4. Paint enclosure, two coats over primer, with high grade enamel, a minimum of 50-70 microns thick.
5. The enclosure shall be force ventilated and the exhaust ports covered with louvers. All components of the system, except sensors, shall be contained in this single enclosure as an integrated package.
6. Door mounted operator devices shall be industrial, oil tight, equivalent to control center devices.
7. Control power for operator devices and customer connections shall be 120 volts. The control power transformer shall be a "Machine Tool" type and have both primary and secondary fusing.

C. Standard Features: Provide the following features as standard on all VFD units furnished.
1. Each VFD unit shall be a solid state AC to DC converter sinusoidal pulse-width modulation (PWM) type, with an altitude adjusted horsepower rating equal to or greater than the motor HP that the unit is supplying or not less than the scheduled rating, whichever is greater.
2. Electrical characteristics:
   a. Input Voltage 460 VAC +/- 10% (Nominal 480 Volts)
   b. Input Frequency 60 Hz +/- 5%
3. Motor braking torque available by means of regenerative braking.
4. An output frequency clamp such that minimum or maximum output frequency can be set at desired limits.
5. Rated overload current shall be 150% for one minute.
6. Each VFD shall have an adjustable acceleration/deceleration time setting from one second to 120 seconds.
7. Each VFD shall maintain a 95 percent or better displacement power factor over the entire speed range.
8. Each VFD shall maintain a 95 percent or better output/input efficiency over the entire speed range.
9. Each VFD shall be supported with a door interlocked input disconnect motor circuit protector. The MCP shall allow trip adjustment sufficient to start the motor across the line in the bypass mode and normally be set at a minimum setting for maximum protection in the VFD mode. The door mounted handle shall be lockable in the off position.

10. Each VFD shall be supported with the following door mounted operator controls as a minimum:
    a. Hand/Off/Auto Switch - keyed switch required.
    b. Local/Remote Switch - keyed switch required.
    c. Frequency Setting - through programmable controller pad.
    d. Frequency Indication Meter Calibrated in % Speed - through programmable controller pad.
    e. Power on Light
    f. VFD Enable Light
    g. VFD Fault Light
    h. External Fault Light (safeties interlock)
11. Each VFD shall be supplied with a minimum of the following protective features with an alarm display indication:
    a. Overcurrent Shut-off
    b. Regenerative Overvoltage
    c. Electronic Thermal Protector
    d. Heat Sink Overheat
    e. Instantaneous Power Failure
    f. Ground Fault
12. The following termination points on terminal strip for field connections:
    a. Safeties Interlock
    b. Remote Start/Stop Contact
    c. Remote VFD Fault Contacts (N.C.)
    d. Remote VFD/Bypass Enable Contacts (N.O.)
    e. Remote Electronic Signal Input
13. Auto restart initiation by means of an automatic time delayed restart after recovering from under voltage or loss of power. The inverter shall have auto restart compatibility with power provided by standby engine generator system provide all required components to insure compatibility to operate on standby engine power. The invertor shall not automatically restart after overcurrent, overvoltage, over temperature, or any other damaging conditions but shall require a manual restart.
14. Remote input signal connection terminals (0-5 VDC or 0-10 VDC = 0-100% speed or 4-20 mA = 20-100% Speed).

D. Additional Configuration Features:
1. Bypass Option: Equip the inverter with a manual bypass contactor arrangement for transfer to the feeder line to operate at constant speed. The contactors shall be electrically and mechanically interlocked and supplied with an adjustable motor overload.
2. Provide a VFD isolation switch to allow maintenance on the VFD while in the bypass mode. Furnish prewired in the same enclosure, including contactors, VFD isolation switch, motor overload VFD/Bypass selector switch and Bypass ON light.
3. Digital or Analog Ammeter, through programmable key pad.
4. Digital or Analog Voltmeter, through programmable key pad.
5. Frequency Jump: Furnish a frequency jump control to avoid operating at a point of resonance with the natural frequency of the machine.
6. Provide series line reactors for harmonic distortion control as standard equipment.
7. Drive Speed Control, I/E or I/I or E/E or E/I transducers as needed.
8. Synchronous transfer to allow transfer from VFD to utility line and back to VFD unit while motor is running.
9. Computer interface option through the addition of a RS 232 data card.
10. Remote Digital/Analog Speed Meter with a 4-20 ma signal. Locate at central control console.
11. Provide each VFD with the ability to be able to communicate with the building automation system using BACNET MS/TP protocol.

E. Acceptable Manufacturers: Acceptable manufacturers of VFD equipment shall meet the following requirements.
   1. Suppliers of VFD Systems must be in the primary business of supplying Variable Frequency Drives and have a minimum of five (5) years of service in that business.
   2. Vendor must have local service center with factory spare parts inventory and factory authorized service technician on call 24 hours/day.
   3. VFD units supplied in response to this specification shall be labeled by UL, CSA or ETL. Note, the entire unit shall carry the label not just a component.
   4. The following VFD suppliers are acceptable providing that all points of this specification are adhered to:
      a. ABB
      b. Energy Management Corporation using Mitsubishi drives.
   5. VFD vendors must have prior approval from Owner before quoting equipment specified. If not listed above, vendor must apply to Owner for approval 10 days prior to bid date showing point by point compliance with this specification including sample of typical harmonic voltage distortion test report. In compliance with general requirements of the specification.

F. Testing: Prior to shipping, test each unit and submit certified test report with each unit. Standard tests to include:
   1. Visual inspection, consisting of checking unit enclosure, wiring, connections, fasteners, covers and locking mechanism.
   2. High pot test; two (2)X rated voltage plus 1000 volts AC for 60 seconds shall be applied per UL 508 on all perifial drive system power components (circuit breakers, contactors, motor overloads, line reactors, disconnect switches, etc.) as a complete package. A copy of test results shall be included in operation manuals.
   3. Motor run test.
   4. Control panel devices, test all devices and lights.
   5. Optional equipment, test optional equipment specified with VFD system.
   6. Special tests, as required and specified.

G. Installation: Field mounting pad and power connections shall be provided by contractor.
   1. Vendor shall supply field start-up service by an authorized factory service representative consisting of system check-out, start-up and system run. The vendor shall provide warranty and authorized factory service including operator training. A written certificate of same shall be provided at start-up. Provide written certified start-up report. VFD service technicians shall be full time employees of the vendor or manufacturer, primarily engaged in VFD service work during normal business hours but on call 24 hours. Start-up by sales representative is not acceptable.
   2. Startup/adjustment effort shall have at least two segments.
      a. Prior to Test and Balance work to place equipment in operation.
      b. At conclusion of Test and Balance work to adjust units to actual operating conditions.
   3. The following adjustments and tests shall be performed as a minimum with certified copies included in the maintenance and operation manual.
      a. Verify that the input voltage is within the manufacturer's specification tolerances.
      b. Verify that the motor rotation is correct in all modes of operation.
      c. Verify all operator devices, programming and monitoring functions to be fully operational.
      d. Verify operation of all field signal control connections.
      e. Measure and record system output voltage and current at 50% and 100% speed. Tune the output voltage to correspond to motor nameplate rating at full speed. Check full load current measurements against nameplate data.
      f. Make all parameter adjustments to tune and optimize the VFD system to the application. Record all configuration values as part of this report.

g. Conduct harmonic tests as identified in the specification. Measurements shall be recorded for each unit with the VFD system off, running at 50% speed, and running at full speed and load.

END OF SECTION 230513

This page intentionally left blank

SECTION 230514
ELECTRIC HEATERS

PART 1 - GENERAL

1.01 SUMMARY

A. Includes But Not Limited To
   1. Furnish and Install electric heaters as described in Contract Documents.

B. Related Sections
   1. Division 230000 – General HVAC Requirements.
   2. Division 233100 – Common Duct Requirements.
   3. Division 255100 – Building Energy Management and Temperature Control Systems.
   4. Division 260000 – Electrical.

PART 2 - PRODUCTS

2.01 ELECTRIC CABINET HEATERS (ECH):

A. General The heating equipment shall include electric, automatic fan forced air heater suitable for large area heating. The heater shall be designed for wall recess mounting. The heater shall be made up of a back box, a heater assembly and a front panel.

B. Heater Assembly: The heater assembly which fits into the back box shall consist of a fan panel upon which is mounted all of the operational parts of the heater.

C. Heating Element: The heating element shall be of the non-glowing design consisting of a special resistance wire enclosed in a steel sheath to which steel plate fins are copper brazed. It shall be warranted for 5 years.

D. Fan and Motor: Fan shall be five-bladed aluminum. Fan motor shall be totally enclosed.

E. Fan Delay Switch: Fan control shall be of bi-metallic, snap-action type and shall activate fan after heating element reaches operating temperature. The fan shall continue to operate after the thermostat is satisfied and until the heating element is cool.

F. Thermostat: The tamper-proof thermostat shall be of the bi-metallic snap-action type with enclosed contacts. It shall be completely concealed behind the front cover to become tamper proof.

G. Thermal Cutout: A manual-reset thermal cutout shall be built into the system to shut off the heater in the event of overheating.

H. Power On/Off Switch: A double-pole, single throw ON/OFF switch shall be mounted on the back box for positive disconnect of power supply. It will be completely concealed behind the front grille panel.

I. Back Box: The back box shall be designed for duty as a recessed rough-in box in either masonry or frame installations and is also used with the surface mounting frame in surface mounting installations. The back box shall be 20-gauge galvanized steel and shall contain knockouts through which power leads are brought.

J. Front Panel: The front panel shall be of the bar grille type and shall be constructed of 18-gauge cold-rolled steel, welded into a uniform grille to direct the warmed air toward the floor. The front grille shall be surrounded by a decorative satin-finish aluminum “picture” frame.

K. Unit color to be as selected by Architect. Furnish paint samples for selection.

L. Manufacturer: Subject to compliance with requirements, provide cabinet heaters of one of the following:
   1. Marley
   2. Aztec
   3. Qmark

2.02 INLINE ELECTRIC DUCT HEATERS: (IDH)

A. Mounting: Heaters are approved for airflow in both directions when installed in horizontal duct.

B. Element housing: Element housing shall be constructed of heavy gauge G60, minimum, galvanized steel and configured for Flanged mounting.

C. Testing Agency Listing and Labeling: Assembly shall be listed to UL standard 1996 and approved for installation with zero clearance to combustibles. Heater shall bear UL and CSA labels

D. Heating elements: All heating elements shall be made of nickel/chromium resistance wire with ends terminated by means of staking and Heliarc welding to machine screws. Heating element support structure shall consist of stainless steel wire formed around ceramic insulators that fully encircle and support the heating element.

E. Control Panel:
   1. Construction: Unit mounted control panel and cover shall be constructed of heavy gauge minimum G60 galvanized steel with multiple knockouts for field wiring.
   2. Control cabinet cover shall be held in place with hinges and tool-release latches or door-interlocking type disconnect switch handle when provided. Two latches shall be employed when cover is 48 inches (1219.2 mm) wide or greater. Control panel shall provide means of safety disconnect and overcurrent protection. Include the following controls:
      a. Door interlocking disconnect switch
      b. Adjustable airflow proving switch
      c. SCR control
   3. Over-temperature protection: Duct heater shall be supplied with primary automatically resetting and secondary manually reset thermal cut-out devices. These devices must function independently to prohibit the heater's operation if either one is activated. A disconnecting magnetic contactor circuit is required. All safety components must be serviceable through the control cabinet access panel without the need to remove the heater from the duct.
   4. Over-current protection: Duct heaters rated at more than 48 amps shall be supplied with factory-installed fusing. Heating elements shall be subdivided and fused accordingly.
   5. All wiring component sizing, component spacing and protective devices within the control cabinet shall be factory installed and comply with NEC and UL standards. All heaters shall function properly with a 50 or 60 Hz power supply.
   6. Power and control conductors shall be terminated in factory installed and labeled terminal blocks.
   7. A wiring diagram depicting the layout and connection points of all electrical components shall be affixed to the inside of the control cabinet cover.
   8. A rating label stating model number, serial number, volts, amps, phase, frequency, control volts, volt-amps and minimum airflow requirements shall be affixed to the interior and exterior of the control cabinet cover.

F. Manufacturer: Subject to compliance with requirements, provide electric wall heaters of one of the following:
   1. Greenheck
   2. Marley
   3. Markle

PART 3 - EXECUTION

3.01 INSPECTION:

A. Examine areas and conditions under which terminal units are to be installed. Do not proceed with work until unsatisfactory conditions have been corrected in manner acceptable to installer.

3.02 INSTALLATION OF CABINET & DUCT HEATERS:

A. General: Install units where indicated, in accordance with equipment manufacturer's published installation instructions, and with recognized industry practices, to ensure that units comply with requirements and serve intended purposes.

B. Coordination: Coordinate with other work, piping, and electrical as necessary to interface installation of other work.

C. Electrical Wiring: Install electrical devices furnished by manufacturer but not specified to be factory-mounted. Furnish copy of manufacturer's wiring diagram submittal to Electrical Installer.
   1. Verify that electrical wiring installation is in accordance with manufacturer's submittal and installation requirements of Division-26 sections. Do not proceed with equipment start-up until wiring installation is acceptable to equipment installer.

D. Grounding: Provide positive equipment ground for fan coil unit components.

3.03 FIELD QUALITY CONTROL:

A. Testing: Upon completion of installation of units, start-up and operate equipment to demonstrate capability and compliance with requirements. Field correct malfunctioning units, then retest to demonstrate compliance.

B. If specified conditions cannot be obtained due to deficiencies in equipment performance or improper installation or workmanship, the Mechanical Contractor and his subcontractors shall make any changes necessary to obtain the specified conditions.

3.04 ADJUSTING AND CLEANING:

A. General: After construction is completed, including painting, clean unit exposed surfaces, vacuum clean terminal coils and inside of cabinets.

B. Retouch any marred or scratched surfaces of factory-finished cabinets, using finish materials furnished by manufacturer.

END OF SECTION 230514

This page intentionally left blank

SECTION 230529
MECHANICAL SUPPORTING DEVICES

PART I - GENERAL

1.01 RELATED DOCUMENTS:

A. Drawings and general provisions of Contract, including General and Supplementary Conditions and Division-1 Specification sections, apply to work of this section.

B. This section is Division 23 Mechanical Supporting Devices section, and is part of each Division 23 section making reference to supports and anchors specified herein.

C. Division 23 General Mechanical Requirements apply to work of this section.

1.02 SUMMARY:

A. Extent of supports and anchors required by this section is indicated on drawings and/or specified in other Division 23 sections.

B. Types of supports and anchors specified in this section include the following:
   1. Horizontal-Piping Hangers and Supports.
   2. Vertical-Piping Clamps.
   3. Hanger-Rod Attachments.
   4. Building Attachments and In-Beds.
   5. Saddles and Shields.
   6. Miscellaneous Materials.
   7. Roof Equipment Supports.
   8. Anchors.
   9. Equipment Supports.

C. Supports and anchors furnished as part of factory-fabricated equipment, are specified as part of equipment assembly in other Division 23 sections.

D. Relate this section to Section 23 05 48 regarding seismic and vibration control.

1.03 QUALITY ASSURANCE:

A. Manufacturer’s Qualifications: Firms regularly engaged in manufacture of supports and anchors, of types and sizes required, whose products have been in satisfactory use in similar service for not less than 5 years.

1.04 SUBMITTALS:

A. Product Data: Submit manufacturer's technical product data, including installation instructions for each type of support and anchor.

B. Shop Drawings:
   1. Submit manufacturer's assembly-type shop drawings for each type of support and anchor, indicating dimensions, weights, required clearances, and methods of assembly of components.

C. Maintenance Data: Submit maintenance data and parts list for each type of support and anchor. Include this data, product data, and shop drawings in maintenance manual; in accordance with requirements of General Conditions.

1.05 REFERENCES:

A. Codes and Standards:
   1. Code Compliance: Comply with applicable building, mechanical and plumbing codes pertaining to product materials and installation of supports and anchors.
   2. UL and FM Compliance: Provide products which are UL-listed and FM approved.
   3. MSS Standard Compliance:
      a. Provide pipe hangers and supports of which materials, design, and manufacture comply with MSS SP-58.

b. Select and apply pipe hangers and supports, complying with MSS SP-69.
c. Fabricate and install pipe hangers and supports, complying with MSS SP-89.
d. Terminology used in this section is defined in MSS SP-90.

PART II - PRODUCTS

2.01 HORIZONTAL-PIPING HANGERS AND SUPPORTS:

A. General: Except as otherwise indicated, provide factory- fabricated horizontal piping hangers and supports complying with MSS SP-58, of one of the following MSS types listed, selected by Installer to suit horizontal-piping systems, in accordance with MSS SP-69 and manufacturer's published product information. Use only one type by one manufacturer for each piping service. Select size of hangers and supports to exactly fit pipe size for bare piping, and to exactly fit around piping insulation with saddle or shield for insulated piping. Provide copper-plated hangers and supports for copper-piping systems.

B. Adjustable Steel Clevises Hangers: MSS Type 1. (For suspension of non-insulated or insulated stationary pipe lines; 1/2" to 30".)

C. Steel Double Bolt Pipe Clamps: MSS Type 3. (For suspension of pipe requiring up to 4" of insulation and where flexibility of clamp is desirable; 3/4" to 24".)

D. Steel Pipe Clamps: MSS Type 4. (For suspension of cold pipe lines or hot lines where little or no insulation is required; 1/2" to 24".)

E. Pipe Hangers: MSS Type 5. (For suspension of piping when off-center closure allowing installation of hanger before erection of piping is desired; 1/2" to 4".)

F. Adjustable Swivel Pipe Rings: MSS Type 6. (For suspension of non-insulated stationary pipe lines; 3/4" to 8".)

G. Adjustable Steel Band Hangers: MSS Type 7. (For suspension of non-insulated stationary pipe lines; 3/4" to 8".)

H. Adjustable Band Hangers: MSS Type 9. (For suspension of non-insulated stationary pipe liens; 1/2" to 8".)

I. Adjustable Swivel Rings, Band Type: MSS Type 10. (For suspension of non-insulated stationary pipe lines; 3/8" to 8".)

J. Split Pipe Rings: MSS Type 11. (For suspension of non-insulated stationary pipe lines; 3/8" to 3".)

K. Extension Split Pipe Clamps: MSS Type 12. (For suspension of non-insulated stationary pipe lines; 3/8" to 3".)

L. U-Bolts: MSS Type 24. (For support of heavy loads; 1/2" to 30".)

M. Clips: MSS Type 26. (For support of uninsulated piping not subject to expansion or contraction.)

N. Pipe Saddle Supports: MSS Type 36, including steel pipe base- support and cast-iron floor flange. (To support pipe from floor stanchion, using floor flange to secure stanchion to floor 4" to 36".)

O. Pipe Stanchion Saddles: MSS Type 37, including steel pipe base support and cast-iron floor flange. (To Type 36 except U-bolt provided for retaining pipe.)

2.02 VERTICAL-PIPING CLAMPS:

A. General: Except as otherwise indicated, provide factory- fabricated vertical-piping clamps complying with MSS SP-58, of one of the following types listed, selected by Installer to suit vertical piping systems, in accordance with MSS SP-69 and manufacturer's published product information. Select size of vertical piping clamps to exactly fit pipe size of bare pipe. Provide copper-plated clamps for copper-piping systems.

B. Two-Bolt Riser Clamps: MSS Type 8. (For support and steadying of pipe risers; 3/4" to 20". Also supports pipe covering or insulation.)

C. Four-Bolt Riser Clamps: MSS Type 42. (When longer ends are required for riser clamps.)

2.03 HANGER-ROD ATTACHMENTS:

A. General: Except as otherwise indicated, provide factory- fabricated hanger-rod attachments complying with MSS SP-58, of one of the following MSS types listed, selected by Installer to suit horizontal-piping hangers and building attachments, in accordance with MSS SP-69 and manufacturer's published product information. Use only one type by one manufacturer for each piping service. Select size of hanger-rod attachments to suit hanger rods. Provide copper-plated hanger-rod attachments for copper-piping systems.

B. Steel Turnbuckles: MSS Type 13. (For adjustment up to 6" for heavy loads.)

C. Steel Clevises: MSS Type 14. (For use on high temperature piping installations.)

D. Swivel Turnbuckles: MSS Type 15. (For use with split pipe rings, MSS type 11.)

E. Malleable Iron Sockets: MSS Type 16. (For attaching hanger rod to various types of building attachments.)

2.04 BUILDING ATTACHMENTS AND IN-BEDS:

A. General: Except as otherwise indicated, provide factory- fabricated building attachments complying with MSS SP-58, of one of the following MSS types listed, selected by Installer to suit building substrate conditions, in accordance with MSS SP-69 and manufacturer's published product information. Select size of building attachments to suit hanger rods. Provide copper-plated building attachments for copper-piping systems.

B. Concrete Inserts: MSS Type 18. (For upper attachment for suspending pipe hangers from concrete ceiling.)

C. Top Beam C-Clamp: MSS Type 19. (Use under roof installations with bar joist construction, for attachment to top flange of structural shape.)

D. Side Beam or Channel Clamps: MSS Type 20. (For attachment to bottom flange of beams, channels, or angles.)

E. Center Beam Clamps: MSS Type 21. (For attachment to center of bottom flange of beams.)

F. Welded Beam Attachments: MSS Type 22. (For attachment to bottom of beams where loads are considerable and rod sizes are large.)

G. C-Clamps: MS Type 23. (For attachment to structural shapes.)

H. Top Beam Clamps: MSS Type 25. (For attachment to top of beams when hanger rod is required tangent to edge of flange.)

I. Side Beam Clamps: MSS Type 27. (For attachment to bottom of steel I-beams.)

J. Steel Beam Clamps with Eye Nut: MSS Type 28. (Same as Type 28 with link extensions.)

K. Linked Steel Clamps with Eye Nut: MSS Type 29. (Same as Type 28 with link extensions.)

L. Malleable Beam Clamps: MSS Type 30. (For attachment to structural steel.)

M. Steel Brackets: One of the following for indicated loading:
   1. Light Duty: MSS Type 31, to 570 pounds.
   2. Medium Duty: MSS Type 32, to 1,500 pounds.
   3. Heavy Duty: MSS Type 33, to 3,000 pounds.

N. Side Beam Brackets: MSS Type 34. (For use on sides of steel or wooden beams.)

O. Plate Lugs: MSS Type 57. (For attachment to steel beams where flexibility at the beam is desired.)

P. Horizontal Travelers: MSS Type 58. (For supporting piping systems subject to linear horizontal movements where head room is limited.

Q. Refer to drawings for Unistrut inserts.

2.05 SADDLES AND SHIELDS:

A. General: Except as otherwise indicated, provide saddles or shields under piping hangers and supports, factory-fabricated, for all insulated piping. Size saddles and shields for exact fit to mate with pipe insulation.

B. Protection Saddles: MSS Type 39; see section Mechanical Insulation for void fill requirements. Use for roller supports and on all pipes 10" and larger.

C. Protection Shields: See section Mechanical Insulation.

D. Thermal Hanger Shields: See section Mechanical Insulation.

E. Manufacturer; Subject to compliance with requirements, provide thermal hanger shields of one of the following:
1. Elcen Metal Products Co.
2. Pipe Shields, Inc.

2.06 MANUFACTURERS OF HANGERS AND SUPPORTS:

A. Manufacturer: Subject to compliance with requirements, provide hangers and supports of one of the following:
1. Kin-Line, Inc.
2. Fee & Mason Mfg. Co.; Div. Figgie International
3. ITT Grinnel Corp.
4. B-Line
5. Unistrut

2.07 HIGH HUMIDITY AREAS: USE CADMIUM PLATED OR GALVANIZED HANGERS, ATTACHMENTS, RODS, NUTS, BOLTS AND OTHER ACCESSORIES IN BOILER ROOMS OR OTHER HIGH HUMIDITY AREAS.

2.08 OUTSIDE AREAS: USE GALVANIZED HANGERS, ATTACHMENTS, RODS, NUTS, BOLTS AND OTHER ACCESSORIES FOR ALL OUTSIDE AREAS.

2.09 MISCELLANEOUS MATERIALS:

A. Metal Framing: Provide products complying with NEMA STD ML 1.

B. Steel Plates, Shapes and Bars: Provide products complying with ASTM A 36.

C. Cement Grout: Portland cement (ASTM C 150, Type I or Type III) and clean uniformly graded, natural sand (ASTM C 404, Size No. 2). Mix at a ratio of 1.0 part cement to 3.0 parts sand, by volume, with minimum amount of water required for placement and hydration. Use Embeco grout for non-shrink applications.

D. Heavy Duty Steel Trapezes: Fabricate from factory built channel (Unistrut) system and use factory fasteners for channel steel shapes, selected for loads required; weld steel in accordance with AWS standards.

E. Pipe Guides: Provide factory-fabricated guides, of cast semi- steel or heavy fabricated steel, consisting of bolted two- section outer cylinder and base with two-section guiding spider bolted tight to pipe. Size guide and spiders to clear pipe and insulation (if any), and cylinder. Provide guides of length recommended by manufacturer to allow indicated travel.

PART III - EXECUTION

3.01 INSPECTION:

A. Examine areas and conditions under which supports and anchors are to be installed. Do not proceed with work until unsatisfactory conditions have been corrected in manner acceptable to Installer.

3.02 PREPARATION:

A. Proceed with installation of hangers, supports and anchors only after required building structural work has been completed in areas where the work is to be installed. Correct inadequacies including (but not limited to) proper placement of inserts, anchors and other building structural attachments.

B. Prior to installation of hangers, supports, anchors and associated work, Installer shall meet at project site with Contractor, installer of each component of associated work, inspection and testing agency representatives (if any), installers of other work requiring coordination with work of this section and Architect/Engineer for purpose of reviewing material selections and procedures to be followed in performing the work in compliance with requirements specified.

3.03 INSTALLATION OF BUILDING ATTACHMENTS:

A. Install building attachments at required locations within concrete or on structural steel for proper piping support. Space attachments within maximum piping span length indicated in MSS SP-69. Install additional concentrated loads, including valves, flanges, guides, strainers, expansion joints, and at changes in direction of piping. Install concrete inserts before concrete is placed; fasten insert securely to forms.
   1. Where concrete with compressive strength less than 2500 psi is indicated, install reinforcing bars through the openings at the tops of inserts.

3.04 INSTALLATION OF HANGERS AND SUPPORTS:

A. General: Install hangers, supports, clamps and attachments to rigidly support piping properly from building structure; comply with MSS SP-69. Arrange for grouping of parallel runs of horizontal piping to be supported together on trapeze type hangers where possible. Install supports with maximum spacing complying with MSS SP-69. Where piping of various sizes is to be supported together by trapeze hangers, space hangers for smallest pipe size or install intermediate supports for smaller diameter pipe. Do not use wire or perforated metal to support piping, and do not support piping from other piping.

B. Install hangers and supports complete with necessary inserts, bolts, rods, nuts, washers and other accessories. Except as otherwise indicated for exposed continuous pipe runs, install hangers and supports of same type and style as installed for adjacent similar piping.

C. Prevent electrolysis in support of copper tubing by the use of hangers and supports which are copper plated, or by isolating with foam rubber covering or 30 mil insulating tape.

D. Provisions for Movement:
   1. Install hangers and supports to allow controlled movement of piping systems and to permit freedom of movement between pipe anchors, and to facilitate action of expansion joints, expansion loops, expansion bends and similar units.
   2. Install supports within 2 feet of non-vertical flex connectors.

E. Load Distribution: Install hangers and supports so that piping live and dead loading and stresses from movement will not be transmitted to connected equipment.

F. Pipe Slopes: Install hangers and supports to provide indicated pipe slopes, and so that maximum pipe deflections allowed by ANSI B31 Pressure Piping Codes are not exceeded.

G. Insulated Piping: Do not allow hangers to come in contact with pipe where pipe is specified to be insulated.

H. Clamps: Attach clamps, including spacers (if any), to piping with clamps projecting through insulation; do not exceed pipe stresses allowed by ANSI B31.

I. Shields: Where low-compressive-strength insulation or vapor barriers are indicated on cold or chilled water piping, install galvanized steel protective shields. Install calcium silicate blocks (12" long minimum) at support points.

J. Saddles: Where insulation without vapor barrier is indicated, install protection saddles.

3.05 INSTALLATION OF ANCHORS:

A. Install anchors at proper locations to prevent stresses from exceeding those permitted by ANSI B31, and to prevent transfer for loading and stresses to connected equipment.

B. Fabricate and install anchor by welding steel shapes, plates and bars to piping and to structure. Comply with ANSI B31 and with AWS standards.

C. Where expansion compensators are indicated, install anchors in accordance with expansion unit manufacturer's written instructions, to limit movement of piping and forces to maximums recommended by manufacturer for each unit.

D. Anchor Spacings: Where not otherwise indicated, install anchors at ends of principal pipe-runs, at intermediate points in pipe-runs between expansion loops and bends. Make provisions for preset of anchors as required to accommodate both expansion and contraction of piping.

3.06 EQUIPMENT SUPPORTS:

A. Provide concrete housekeeping bases for all floor mounted equipment furnished as part of the work of Division 15. Size bases to extend a minimum of 4" beyond equipment base in any direction; and 4" above finished floor elevation. Construct of reinforced concrete, roughen floor slab beneath base for bond, and provide steel rod anchors between floor and base. Locate anchor bolts using equipment manufacturer's templates. Chamfer top and edge corners.

B. Provide structural steel stands to support equipment not floor mounted or hung from structure. Construct of structural steel members or steel pipe and fittings. Provide factory-fabricated tank saddles for tanks mounted on steel stands.

C. Furnish roof equipment supports to Contractor for installation as part of work of Division 7; not work of this section.

3.07 ADJUSTING AND CLEANING:

A. Hanger Adjustment: Adjust hangers so as to distribute loads equally on attachments.

B. Support Adjustment: Provide grout under supports so as to bring piping and equipment to proper level and elevations.

C. Cleaning: Clean factory-finished surfaces. Repair any marred or scratched surfaces with manufacturer's touch-up paint.

END OF SECTION 230529

SECTION 230548
MECHANICAL SOUND, VIBRATION AND SEISMIC CONTROL

PART I - GENERAL:

1.01 RELATED DOCUMENTS:

A. Drawings and general provisions of Contract, including General and Supplementary Conditions and Division 01 Specification sections, apply to work of this section.

B. This section is Division 23 Mechanical Sound, Vibration and Seismic Control section, and is part of each Division 23 section making reference to mechanical sound, vibration and seismic control specified herein.

C. Division 23 General Mechanical Requirements apply to work of this section.

1.02 SUMMARY: FURNISH AND INSTALL COMPLETE SEISMIC RESTRAINT AND VIBRATION CONTROL SYSTEMS FOR ALL WORK INSTALLED UNDER DIVISION 23. INCLUDING OWNER FURNISHED CONTRACTOR INSTALLED EQUIPMENT. WORK TO BE RESPONSIVE TO THE INTENT OF THE INTERNATIONAL BUILDING CODE, LATEST ADOPTED EDITION, FOR THE RESPECTIVE SEISMIC DESIGN CATEGORY D, IMPORTANCE FACTOR OF 1.0.

1.03 QUALITY ASSURANCE:

A. Manufacturer's Qualifications: Engage the services of an independent seismic and vibration control subcontractor who has the technology, experience, computer capabilities and manufactured products to prepare the required computations, shop drawings and special devices to meet the minimum requirements described herein. Select from the following:
   1. Amber Booth
   2. Kinetics
   3. Mason - West
   4. Vibro-Acoustics

B. The seismic and vibration control subcontractor shall visit the site during construction at a minimum of two specific periods.
   1. When equipment is set in place, prior to placement of seismic restraint devices for the purposes of directing the contractor in properly locating and installing the approved devices.
   2. At the completion of the project, prior to final mechanical inspection, for the purpose of verifying the correctness of the seismic restraint and vibration isolation device installation and preparing certification of the seismic vibration-isolation work.

C. The seismic subcontractor shall exercise the quality control for this work and shall include, but not be limited to instructions direct to the Mechanical (Division 23) Contractor concerning:
   1. Anchoring of all mechanical equipment including owner furnished and contractor installed.
   2. Vibration mounting of equipment.
   3. Equipment base coordination with restraint requirements.
   4. Snubbing of equipment.
   5. Bracing and anchoring of ductwork piping and conduit.
   6. Provision for expansion and vibration of piping.
   7. Concrete and/or steel pads or bases to assure proper mounting of restraints and isolators.
   8. Vibration isolation of exhaust fans, relief fans, ventilation fans, and supply air fans.

D. The subcontractor shall be responsible for identifying the need for the size and location of steel sole plates and their attachment to structural steel or concrete.

E. The subcontractor shall certify in writing that he has inspected the installation and that all isolation, anchors and seismic restraint materials are installed correctly and functioning properly. Certification shall be provided after all corrective work has been completed.

1.04 SUBMITTALS:

A. Submittal data is required and shall consist of computations, vibration isolation selection, equipment anchors, anchor bolt sizes, supports, seismic restraints, sole plate data, restraint locations and type of restraints.

B. Submittal data shall identify dimensions, load deflection data, center of gravity, standard connections, manufacturer's recommendations, behavior problems including vibrations, thermal expansion, building expansion joints, etc., associated with equipment, ductwork, piping and conduit.

C. Calculations need not be submitted when restraint devices for piping, conduit and ductwork are proposed in accordance with the SMACNA Guidelines for Seismic Restraints.

D. Selection of isolator anchors and restraints shall be clearly made known along with the basis for selection so that proposed systems can be reviewed.

E. Calculations furnished for anchors, anchor bolts, sole plates and other support steel for restraining devices shall be signed and stamped by an engineer licensed in one of the United States.

1.05 REFERENCES:

A. Codes and Standards: (Latest adopted edition)
1. International Building Code
2. NFPA bulletin 90A,
3. UL Standard 181
4. Guidelines for seismic restraint of Mechanical Systems and Plumbing Piping Systems. Published by the Sheet Metal Industry Fund of Los Angeles, California, and the Plumbing and Piping Industry Council, Inc., Los Angeles, California.

PART II - PRODUCTS

2.01 MATERIALS - PRODUCTS: RESTRAINT DEVICES SHALL BE ESPECIALLY DESIGNED TO RESIST SEISMIC FORCES IN ALL DIRECTIONS.

A. Snubbers: Restraint surfaces which engage under seismic motion shall be cushioned with a resilient elastomer neoprene (bridge bearing neoprene) to protect equipment. Restraints shall allow a maximum of 1/4" before engaging and shall not interfere in normal starting or stopping operation. Housing shall allow for visual inspection to determine clearances during system operation. Restraints shall be field adjustable and be positioned for up to 1/4" clearance both horizontally and vertically. Mountings and snubbers are to be manufactured under a Quality Assurance (QA) Program.

B. Snubbers and Isolator Combination Devices: Combination unitized devices may be used where equipment isolation is required. They shall include the requirements listed for snubbers. Isolation portion shall be stable spring type with combination leveling bolt and equipment fastening device. Base plate shall have adequate means for bolting to structure. The spring assembly shall be removable and shall fit within a welded steel enclosure.

C. Piping, Conduit and Duct Restraints: Restraint materials for exposed installation shall be standard fabricated flat steel, angle rod and channel members.
1. Restraint members shall be bolt connected. Cabling materials and methods shall be used only in chases or concealed ceiling spaces.

PART III - EXECUTION

3.01 SEISMIC RESTRAINT GUIDELINE:

A. Guidelines for SMACNA seismic restraints for conduit, piping and ductwork are to serve as the basis for restraint methods. (Exception - no cabling shall be used in the restraint systems except as noted.)

3.02 SEISMIC RESTRAINT-PIPING AND CONDUIT:

A. General: All piping and conduit shall be protected in all planes by restraints, designed to accommodate thermal movement while at the same time restraining seismic motion. Tanks and vessels connected to piping shall be restrained in the same manner as the piping.

B. Locations of the restraints shall include, but not be limited to:
   1. At all drops or risers to equipment connections.
   2. At all changes in direction of piping and conduit.
   3. At all horizontal runs of pipe and conduit to keep it in alignment and prevent sagging with restraints not to exceed the following:
      a. Transverse bracing at 40'-0" O.C. maximum.
      b. Longitudinal bracing at 80'-0" O.C. maximum.
   4. Provide flexibility in joints where pipes pass through building seismic or expansion joints.
   5. On both sides of flexible connectors.

C. Exceptions:
   1. Conduit under 2-1/2" size and piping under 1-1/2" size need not be additionally seismically restrained except as follows:
      a. Brace all piping and conduit 1-1/4" and larger in boiler rooms, mechanical rooms, electrical equipment rooms and refrigeration machinery rooms.
      b. Brace all fuel gas and oil piping, medical gas piping and compressed air piping 1" and larger.
   2. Seismic bracing may be omitted:
      a. When the top of the pipe is suspended 12" or less from the supporting structure member and the pipe or conduit is suspended by an individual hanger.
      b. On all piping 3/4" and smaller.

3.03 SEISMIC RESTRAINT INSULATED PIPING: WHERE PIPING IS DESIGNATED TO BE INSULATED, THE POINTS OF SUPPORT SHALL BE PROTECTED BY A 360O SHEET METAL SHIELD. INSERT INSULATION SHALL BE OF THE SAME THICKNESS AS THE ADJOINING PIPE INSULATION. (PIPE SHIELDS, INC.)

1. The sheet metal shield wrapped around the insert shall be of the following lengths and gauge thickness.

SHIELD LENGTH MINIMUM GAUGE

4" 20

6" 20

9" 16

12" 16

18" 16

9.01 SEISMIC RESTRAINT - PIPING AT FIRE-WALL PENETRATION WHERE WALL IS USED AS A RESTRAINT:

A. Bare Pipe: Encase pipe in minimum 24 gauge sheet metal can sized for one inch spacing between pipe and outer diameter of can. Spacing shall be packed in accordance with fire resistant/retardant materials in accordance with Section: FIRE STOPPING.

B. Insulated Pipe: Encase in adjustable or fixed length cans, minimum 24 gauge, sized for maximum one inch spacing between insulation and outer diameter of can. Insulation shall consist of 360o insert sized to extend a minimum of 1" beyond wall or floor penetration and of the same thickness as the adjoining insulation. Spacing between shield and can shall be packed in accordance with Section: FIRE STOPPING.

9.02 SEISMIC RESTRAINT - DUCTWORK:

A. Ductwork, four feet square and larger in cross sectional area or 26" diameter and larger shall be protected in all places by restraints. Locations shall include, but not be limited to:

1. At all equipment connections.
2. At all duct turns and duct run ends (transverse bracing).
3. Transverse bracing to occur 30'-0" O.C. maximum. Rectangular ducts 61" and larger in either direction may be braced at 32'-0" O.C.
4. Longitudinal bracing shall occur at 60'-0" O.C. maximum.

B. A group of ducts may be combined in a larger size frame using the overall dimensions with maximum weight for selection of restraint members.

C. No bracing is required if the top of the duct is suspended 12" or less from supporting member and attached at the top of the duct as well as sides and bottom.

9.03 VIBRATION ISOLATION:

A. General: Furnish and install devices to isolate moving equipment from the structure. Review isolation furnished with factory package equipment, require conformance with project criteria.

B. Basic Criteria: Vibration isolation devices which have natural frequencies approximately 1/10 that of the related driving frequency.

C. Equipment to Include:
1. Utility Exhaust Air Fans: Vibration isolated and seismic restrained on inertia base. Inertia base shall have 1.5 times total weight of assembly.
2. Packaged Units.
3. Makeup air units
4. Evaporative Coolers.
5. Rooftop exhaust fans.

D. Field Verify: All required devices and installation.

9.04 VIBRATION ISOLATION - DUCTWORK AND PIPING:

A. Furnish and install devices to isolate all piping and ductwork from other moving equipment. Provide flex connections, spring hangers, grooved joint couplings for pipe, etc., as required.

END OF SECTION 230548

SECTION 230553
MECHANICAL IDENTIFICATION

PART I - GENERAL

1.01 RELATED DOCUMENTS:

A. Drawings and general provisions of Contract, including General and Supplementary Conditions and Division 01 Specification sections, apply to work of this section.

B. Division 23 Basic Mechanical Materials and Methods section apply to work of this section.

1.02 SUMMARY:

A. Label all heating, air conditioning, automatic temperature control equipment (excluding thermostats and relays), and distribution systems. Also, label all electrical switches and starters for all mechanical equipment.

PART II - GENERAL MECHANICAL MATERIALS AND METHODS

2.01 EQUIPMENT AND DUCT IDENTIFICATION:

A. Equipment:
   1. Use the same identification number and name as that shown on the drawings or in these specifications. Make equipment nameplates of black face formica with white engraved lettering 3/16" high or larger, attached securely.
   2. Include the following information on equipment nameplates where applicable:

B. Identification name.

C. Identification number.

D. Capacity specified.

E. Actual capacity.

F. Area or zone served.
   a. Note operating conditions, including head or static pressure, RPM, motor horsepower at design conditions, area or zone served, name of lubricant, frequency of lubrication.

G. Color code all accessible duct and piping and identify with wording and arrows every 50 feet, at each riser, at each junction, at each access door, and where required to easily identify the medium transported.

H. Identify duct systems by:
   1. Lettering color, and
   2. Flow Direction Arrow.
   3. Identifying lettering shall be painted or stenciled on duct. Self-adhesive or glue-on type labels are acceptable. Letters shall be 2" high for duct and for 3" or larger piping, 1" high for 1-1/4" to 2-1/2" pipe, and 1/2" high for 1" pipe and smaller.
   4. Arrows to indicate direction of flow shall be painted or stenciled on the duct in the same color as the lettering. The arrow shall point away from the lettering. On duct and 3" or larger piping, the “shaft” of the arrow shall be 2" long and 1" wide. Smaller piping, 2-1/2" or less, shall have arrows with a shaft 1/2" wide and 2" long. Use a double-headed arrow if the flow can be in either direction.
   5. Lettering, directional flow arrows and banding colors shall be painted or stenciled on the duct or pipe. Self-adhesive or glue on labels are acceptable.
   6. Piping and duct shall be identified with the following colors:
      a. Banding Identifying Lettering
      b. Color Lettering Color
      c. Water:
      d. Cold Air Duct (Unit Served)
      e. Return Air Duct (Unit Served)
      f. Exhaust Air Duct (Unit Served)

g. Supply Duct (Unit Served)

2.02 PANEL IDENTIFICATION:

A. Provide all panel devices on panel faces with engraved black face formica with white engraved lettering labels.

B. Provide all internal panel components with engraved black face formica labels with white engraved lettering. Fasten label beneath each device.

C. Numerically or alphabetically code all panel wiring and tubing.

END OF SECTION 230553

SECTION 230593
TESTING, ADJUSTING AND BALANCING

PART 1 - GENERAL

1.01 RELATED DOCUMENTS

A. Drawings and general provisions of the Contract, including General and Supplementary Conditions and Division 1 Specification Sections, apply to this Section.

1.02 SUMMARY

A. This Section includes testing, adjusting, and balancing HVAC systems to produce design objectives, including the following:
   1. Balancing airflow within distribution systems, including submains, branches, and terminals, to indicated quantities according to specified tolerances.
   2. Adjusting total HVAC systems to provide indicated quantities.
   3. Measuring electrical performance of HVAC equipment.
   4. Setting quantitative performance of HVAC equipment.
   5. Verifying that automatic control devices are functioning properly.
   6. Reporting results of the activities and procedures specified in this Section.
   7. Provide new sheaves and change them as required on all fans.
   8. Participate fully in commissioning activities as specified in division 019113.

1.03 DEFINITIONS

A. Adjust: To regulate air patterns at the terminal equipment, such as to reduce fan speed or adjust a damper.

B. Balance: To proportion flows within the distribution system, including submains, branches, and terminals, according to design quantities.

C. Draft: A current of air, when referring to localized effect caused by one or more factors of high air velocity, low ambient temperature, or direction of airflow, whereby more heat is withdrawn from a person's skin than is normally dissipated.

D. Procedure: An approach to and execution of a sequence of work operations to yield repeatable results.

E. Report Forms: Test data sheets for recording test data in logical order.

F. System Effect: A phenomenon that can create undesired or unpredicted conditions that cause reduced capacities in all or part of a system.

G. System Effect Factors: Allowances used to calculate a reduction of the performance ratings of a fan when installed under conditions different from those presented when the fan was performance tested.

H. Terminal: A point where the controlled medium, such as fluid or energy, enters or leaves the distribution system.

I. Test: A procedure to determine quantitative performance of a system or equipment.

J. Testing, Adjusting, and Balancing Agent: The entity responsible for performing and reporting the testing, adjusting, and balancing procedures.

K. AABC: Associated Air Balance Council.

L. AMCA: Air Movement and Control Association.

M. NEBB: National Environmental Balancing Bureau.

N. SMACNA: Sheet Metal and Air Conditioning Contractors' National Association.

1.04 SUBMITTALS

A. Contract Documents Examination Report: Within 90 days from the Contractor's Notice to Proceed, submit 2 copies of the Contract Documents review report as specified in Part 3 of this Section.

B. Strategies and Procedures Plan: Within 120 days from the Contractor's Notice to Proceed, submit 2 copies of the testing, adjusting, and balancing strategies and step-by-step procedures as specified in Part 3 "Preparation" Article below. Include a complete set of report forms intended for use on this Project.

C. Certified Testing, Adjusting, and Balancing Reports: Submit 2 copies of reports prepared, as specified in this Section, on approved forms certified by the testing, adjusting, and balancing Agent.

D. Sample Report Forms: Submit 2 sets of sample testing, adjusting, and balancing report forms.

E. Warranty: Submit 2 copies of special warranty specified in the "Warranty" Article below.

1.05 QUALITY ASSURANCE

A. Agent Qualifications: Engage a testing, adjusting, and balancing agent certified by either AABC or NEBB. Balancing shall only be performed by the following:
   1. Bobs Test and Balance, Salt Lake City, Utah.
   2. Barnett, Inc., Payson, Utah
   3. Approved Equal Prior to Bidding.

B. Testing, Adjusting, and Balancing Conference: Meet with the Owner's and the Architect's representatives and other members of the Commissioning team on approval of the testing, adjusting, and balancing strategies and procedures plan to develop a mutual understanding of the details. Ensure the participation of all proposed testing, adjusting, and balancing team members, HVAC controls installer, and other support personnel. Provide 14 days' advance notice of scheduled meeting time and location.
   1. Agenda Items: Include, at a minimum, the following:
      a. Contract Documents examination report.
      b. Review of the Testing, Adjusting, and Balancing Plan, and proposed TAB forms.
      c. Proposed work schedule and Project site access requirements.
      d. Coordination and cooperation of trades and subcontractors, especially the Controls Contractor.
      e. Coordination with the Commissioning Authority and the Commissioning team.
      f. Coordination and distribution of a “TAB Issues and Issue Resolutions” log.
      g. Coordination of other documentation and communication flow.

C. Certification of Testing, Adjusting, and Balancing Reports: Certify the testing, adjusting, and balancing field data reports. This certification includes the following:
   1. Review field data reports to validate accuracy of data and to prepare certified testing, adjusting, and balancing reports.
   2. Certify that the testing, adjusting, and balancing team complied with the approved testing, adjusting, and balancing plan and the procedures specified and referenced in this Specification.

D. Testing, Adjusting, and Balancing Reports: Use standard forms from AABC's "National Standards for Testing, Adjusting, and Balancing" or from NEBB's "Procedural Standards for Testing, Adjusting, and Balancing of Environmental Systems."

E. Instrumentation Type, Quantity, and Accuracy: As described in NEBB's "Procedural Standards for Testing, Adjusting, and Balancing of Environmental Systems," Section II, "Required Instrumentation for NEBB Certification."

F. Instrumentation Calibration: Calibrate instruments at least every 6 months or more frequently if required by the instrument manufacturer.

1.06 PROJECT CONDITIONS

A. Partial Owner Occupancy: The Owner may occupy completed areas of the building before Substantial Completion. Cooperate with the Owner during testing, adjusting, and balancing operations to minimize conflicts with the Owner's operations.

1.07 COORDINATION

A. Coordinate the efforts of factory-authorized service representatives for systems and equipment, HVAC controls installers, and/or other mechanics to operate HVAC systems and equipment to support and assist testing, adjusting, and balancing activities.

B. Notice: Provide 7 days' advance notice for each test. Include scheduled test dates and times.

C. Perform testing, adjusting, and balancing after leakage and pressure tests on air and water distribution systems have been satisfactorily completed.

1.08 WARRANTY (NOT APPLICABLE)

PART 2 - PRODUCTS (NOT APPLICABLE)

PART 3 - EXECUTION

3.01 EXAMINATION

A. Examine Contract Documents to become familiar with project requirements and to discover conditions in systems' designs that may preclude proper testing, adjusting, and balancing of systems and equipment.
   1. Contract Documents are defined in the General and Supplementary Conditions of the Contract.
   2. Verify that balancing devices, such as test ports and manual volume dampers, are required by the Contract Documents. Verify that quantities and locations of these balancing devices are accessible and appropriate for effective balancing and for efficient system and equipment operation.

B. Examine system and equipment installations to verify that they are complete and that testing, cleaning, adjusting, and commissioning specified in individual Specification Sections have been performed.

C. Examine HVAC system and equipment installations to verify that indicated balancing devices, such as test ports, gage cocks, thermometer wells, flow-control devices, balancing valves and fittings, and manual volume dampers, are properly installed, and their locations are accessible and appropriate for effective balancing and for efficient system and equipment operation.

D. Examine systems for functional deficiencies that cannot be corrected by adjusting and balancing.

E. Examine air-handling equipment to ensure clean filters have been installed, bearings are greased, belts are aligned and tight, and equipment with functioning controls is ready for operation.

F. Examine equipment for installation and for properly operating safety interlocks and controls.

G. Report deficiencies discovered before and during performance of testing, adjusting, and balancing procedures.

3.02 PREPARATION

A. Prepare a testing, adjusting, and balancing plan that includes strategies and step-by-step procedures.

B. Complete system readiness checks and prepare the system readiness reports found in section 3.23. Verify the following:
   1. Automatic temperature-control systems are operational.
   2. Equipment and duct access doors are securely closed.
   3. Balance, smoke, and fire dampers are open.
   4. Isolating and balancing valves are open and control valves are operational.
   5. Ceilings are installed in critical areas where air-pattern adjustments are required and access to balancing devices is provided.
   6. Windows and doors can be closed so design conditions for system operations can be met.

3.03 GENERAL TESTING AND BALANCING PROCEDURES

A. Perform testing and balancing procedures on each system according to the procedures contained in AABC or NEBB national standards and this Section.

B. Cut insulation, ducts, pipes, and equipment cabinets for installation of test probes to the minimum extent necessary to allow adequate performance of procedures. After testing and balancing, close probe holes and patch insulation with new materials identical to those removed. Restore vapor barrier and finish according to the insulation Specifications for this Project.

C. Mark equipment settings with paint or other suitable, permanent identification material, including damper-control positions, valve indicators, fan-speed-control levers, and similar controls and devices, to show final settings.

3.04 FUNDAMENTAL AIR SYSTEMS' BALANCING PROCEDURES

A. Prepare test reports for both fans and outlets. Obtain manufacturer's outlet factors and recommended testing procedures. Crosscheck the summation of required outlet volumes with required fan volumes.

B. Prepare schematic diagrams of systems' "as-built" duct layouts.

C. For variable-air-volume systems, develop a plan to simulate diversity.

D. Determine the best locations in main and branch ducts for accurate duct airflow measurements.

E. Check the airflow patterns from the outside-air louvers and dampers and the return- and exhaust-air dampers, through the supply-fan discharge and mixing dampers.

F. Locate start-stop and disconnect switches, electrical interlocks, and motor starters.

G. Verify that motor starters are equipped with properly sized thermal protection.

H. Check dampers for proper position to achieve desired airflow path.

I. Check for airflow blockages.

J. Check condensate drains for proper connections and functioning.

K. Check for proper sealing of air-handling unit components.

3.05 CONSTANT-VOLUME AIR SYSTEMS' BALANCING PROCEDURES

A. The procedures in this Article apply to constant-volume supply-, return-, and exhaust-air systems. Additional procedures are required for variable-air-volume, multizone, dual-duct, induction-unit supply-air systems and process exhaust-air systems. These additional procedures are specified in other articles in this Section.

B. Adjust fans to deliver total design airflows within the maximum allowable rpm listed by the fan manufacturer.
   1. Measure fan static pressures to determine actual static pressure as follows:
      a. Measure outlet static pressure as far downstream from the fan as practicable and upstream from restrictions in ducts such as elbows and transitions.
      b. Measure static pressure directly at the fan outlet or through the flexible connection.
      c. Measure inlet static pressure of single-inlet fans in the inlet duct as near the fan as possible, upstream from flexible connection and downstream from duct restrictions.
      d. Measure inlet static pressure of double-inlet fans through the wall of the plenum that houses the fan.
   2. Measure static pressure across each air-handling unit component.
      a. Simulate dirty filter operation and record the point at which maintenance personnel must change filters.
   3. Measure static pressures entering and leaving other devices such as sound traps, heat recovery equipment, and air washers under final balanced conditions.
   4. Compare design data with installed conditions to determine variations in design static pressures versus actual static pressures. Compare actual system effect factors with

calculated system effect factors to identify where variations occur. Recommend corrective action to align design and actual conditions.

5. Adjust fan speed higher or lower than design to achieve design conditions. Make required adjustments to pulley sizes, motor sizes, and electrical connections to accommodate fan-speed changes.
6. Do not make fan-speed adjustments that result in motor overload. Consult equipment manufacturers about fan-speed safety factors. Modulate dampers and measure fan-motor amperage to ensure no overload will occur. Measure amperage in full cooling, full heating, and economizer modes to determine the maximum required brake horsepower.

C. Adjust volume dampers for main duct, submain ducts, and major branch ducts to design airflows within specified tolerances.
   1. Measure static pressure at a point downstream from the balancing damper and adjust volume dampers until the proper static pressure is achieved.
      a. Where sufficient space in submains and branch ducts is unavailable for Pitot-tube traverse measurements, measure airflow at terminal outlets and inlets and calculate the total airflow for that zone.
   2. Remeasure each submain and branch duct after all have been adjusted. Continue to adjust submains and branch ducts to design airflows within specified tolerances.

D. Measure terminal outlets and inlets without making adjustments.
   1. Measure terminal outlets using a direct-reading hood or the outlet manufacturer's written instructions and calculating factors.

E. Adjust terminal outlets and inlets for each space to design airflows within specified tolerances of design values. Make adjustments using volume dampers rather than extractors and the dampers at the air terminals.
   1. Adjust each outlet in the same room or space to within specified tolerances of design quantities without generating noise levels above the limitations prescribed by the Contract Documents.
   2. Adjust patterns of adjustable outlets for proper distribution without drafts.

3.06 MOTORS

A. Motors, 1/2 HP and Larger: Test at final balanced conditions and record the following data:
   1. Manufacturer, model, and serial numbers.
   2. Motor horsepower rating.
   3. Motor rpm.
   4. Efficiency rating if high-efficiency motor.
   5. Nameplate and measured voltage, each phase.
   6. Nameplate and measured amperage, each phase.
   7. Starter thermal-protection-element rating.

B. Motors Driven by Variable-Frequency Controllers: Test for proper operation at speeds varying from minimum to maximum. Test the manual bypass for the controller to prove proper operation. Record observations, including controller manufacturer, model and serial numbers, and nameplate data.

C. Report any starter thermal-protection sizing issues in the TAB issues log.

3.07 TEMPERATURE TESTING

A. During testing, adjusting, and balancing, report need for adjustment in temperature regulation within the automatic temperature-control system.

B. Measure indoor wet- and dry-bulb temperatures every other hour for a period of 2 successive 8-hour days, in each separately controlled zone, to prove correctness of final temperature settings. Measure when the building or zone is occupied.

C. Measure outside-air, wet- and dry-bulb temperatures.

3.08 TEMPERATURE-CONTROL VERIFICATION

A. Verify that controllers are calibrated.

B. Check transmitter and controller locations and note conditions that would adversely affect control functions.

C. Record controller settings and note variances between set points and actual measurements.

D. Verify operation of limiting controllers (i.e., high- and low-temperature controllers).

E. Verify free travel and proper operation of control devices such as damper and valve operators.

F. Verify sequence of operation of control devices. Note air pressures and device positions and correlate with airflow and water-flow measurements. Note the speed of response to input changes.

G. Confirm interaction of electrically operated switch transducers.

H. Confirm interaction of interlock and lockout systems.

I. Record voltages of power supply and controller output. Determine if the system operates on a grounded or nongrounded power supply.

J. Note operation of electric actuators using spring return for proper fail-safe operations.

3.09 TOLERANCES

A. Set HVAC system airflow and water flow rates within the following tolerances:
   1. Supply, Return, and Exhaust Fans: + 5 to +10%
   2. Positive Pressure Spaces:
      a. 0 to +10%
      b. 0 to -10%

3.10 REPORTING

A. Initial Construction-Phase Report: Based on examination of the Contract Documents as specified in "Examination" Article above, prepare a report on the adequacy of design for systems' balancing devices. Recommend changes and additions to systems' balancing devices to facilitate proper performance measuring and balancing. Recommend changes and additions to HVAC systems and general construction to allow access for performance measuring and balancing devices.

B. Status Reports: As Work progresses, prepare weekly reports (hand-written is acceptable) to describe completed procedures, procedures in progress, and scheduled procedures. Include a copy of the “TAB Issues and Issue Resolution” log of any deficiencies and problems found in systems being tested and balanced.

3.11 FINAL REPORT

A. General: Typewritten, or computer printout in letter-quality font, on standard bond paper, in 3-ring binder, tabulated and divided into sections by tested and balanced systems.

B. Include a certification sheet in front of binder signed and sealed by the certified testing and balancing engineer.

C. Include the National Project Performance Guarantee issued by AABC or NEBB.

D. Include a detailed narrative describing any discrepancies between the design requirements and the “as balanced” conditions that exceed the allowable tolerances described in 3.19 above. Also, list the steps taken and test preformed (with supporting data) attempting to rectify the condition.

E. Include the final “TAB Issues and Issue Resolutions” log.

F. Final Report Contents: In addition to the certified field report data, include the following:
   1. Fan curves.
   2. Other information relative to equipment performance, but do not include approved Shop Drawings and Product Data.

G. General Report Data: In addition to the form titles and entries, include the following data in the final report, as applicable:
   1. Title page.
   2. Name and address of testing, adjusting, and balancing Agent.
   3. Project name.
   4. Project location.
   5. Architect's name and address.
   6. Engineer's name and address.
   7. Contractor's name and address.
   8. Report date.
   9. Signature of testing, adjusting, and balancing Agent who certifies the report.
   10. Summary of contents, including the following:
      a. Design versus final performance.
      b. Notable characteristics of systems.
      c. Description of system operation sequence if it varies from the Contract Documents.
   11. Nomenclature sheets for each item of equipment.
   12. Data for terminal units, including manufacturer, type size, and fittings.
   13. Test conditions for fans and pump performance forms, including the following:
      a. Settings for outside-, return-, and exhaust-air dampers.
      b. Conditions of filters.
      c. Fan drive settings, including settings and percentage of maximum pitch diameter.
      d. VFD settings for variable-air-volume systems.
      e. Settings for supply-air, static-pressure controller.
      f. Other system operating conditions that affect performance.

H. System Diagrams: Include schematic layouts of air and hydronic distribution systems. Present with single-line diagrams and include the following:
   1. Quantities of outside, supply, return, and exhaust airflows.
   2. Water and steam flow rates.
   3. Duct, outlet, and inlet sizes.
   4. Pipe and valve sizes and locations.
   5. Terminal units.
   6. Balancing stations.

I. Equipment Test Reports: For all equipment tested:
   1. Unit Data: Include the following:
      a. Unit identification.
      b. Location.
      c. Make and type.
      d. Model number and unit size.
      e. Manufacturer's serial number.
   2. Motor Data: Include the following:
      a. Make and frame type and size.
      b. Horsepower and rpm.
      c. Volts, phase, and hertz.
      d. Full-load amperage and service factor.
   3. Test Data: Include design and actual values for the following: (all elements of the system that were tested, including air, static pressures, inlet and outlet static pressures, inlet, outlet wet bulb, dry bulb temperatures, duct sizes tested, inlet and outlet flows temperatures and pressures and all other pertinent data. The report to be organized per each item tested.)
      a. Total rate in cfm.
      b. Total system static pressure in inches wg.
      c. Fan rpm.

d. Motor amps, volts, kW
e. VFD setpoints
f. Starter and Thermal Overload information
g. Discharge static pressure in inches wg.
h. Filter static-pressure differential in inches wg.
i. Preheat coil static-pressure differential in inches wg.
j. Cooling coil static-pressure differential in inches wg.
k. Outside airflow in cfm.
l. Return airflow in cfm.
m. Outside-air damper position.
n. Return-air damper position.
o. Pitot-tube traverses.
p. Summary of all final room pressure relationships by CFM offsets and inches of WG.
q. List of all TAB generated or manipulated final setpoints for the Phoenix control valves and VAV boxes. (area factors, correction factors, flow coefficients, etc…)

J. Instrument Calibration Reports: For instrument calibration, include the following:
1. Report Data: Include the following:
a. Instrument type and make.
b. Serial number.
c. Application.
d. Dates of use.
e. Dates of calibration.

3.12 ADDITIONAL TESTS

A. Within 120 days of completing testing, adjusting, and balancing, perform additional testing and balancing to verify that balanced conditions are being maintained throughout and to correct unusual conditions.

B. Seasonal Periods: If initial testing, adjusting, and balancing procedures were not performed during near-peak summer and winter conditions, perform additional inspections, testing, and adjusting during near-peak summer and winter conditions.

C. Participate in verification of the TAB report, which will consist of repeating any selected measurement contained in the TAB report where required by the CxA for verification or diagnostic purposes.

D. The TAB Final Report Verification shall be conducted by the CxA (and possibly other members of the Cx Team) and will include a field verification of up to 10% of the PTB's field readings.

E. The Test and Balance contractor will provide technicians and instrumentation to support the field verification.

F. Instruments used for the field verification shall be the same instruments (by model and serial number) that were used for the original TAB work.

G. Failure of an item during the TAB field verification is defined as:
1. For all readings other than sound, a deviation of more than 10 percent from the reported value.
2. For sound pressure readings, a deviation of 3 decibels. (Note: variations in background noise must be considered).

H. A failure of more than 10 percent of the readings tested during the field verification shall result in the rejection of the final TAB report and require re-balancing of the system(s) in question.

END OF SECTION 230593

SECTION 230700
MECHANICAL INSULATION

PART I - GENERAL

1.01 RELATED DOCUMENTS:

A. Drawings and general provisions of Contract, including General and Supplementary Conditions and Division 01 Specification sections apply to work of this section.

B. Division 23, Section 23 00 00 - General Mechanical Requirements applies to work of this section.

1.02 SUMMARY:

A. Extent of mechanical insulation required by this section is indicated on drawings and schedules as required by the current International Energy Code, and by requirements of this section. Use no asbestos in this work. Include restorations of insulations of damaged work including repair of damaged existing insulation due to new work.

B. Types of mechanical insulation specified in this section include the following:
   1. Piping Systems Insulation:
      a. Fiberglass.
      b. Flexible Unicellular
   2. Ductwork System Insulation:
      a. Fiberglass.
      b. Rigid Flexible Wrap.
   3. Equipment Insulation:
      a. Fiberglass.
      b. Cellular.
      c. Flexible Unicellular.

C. Refer to Division 23 section "Supports and Anchors" for protection saddles, protection shields, and thermal hanger shields.

D. Refer to Division 23 section "Ductwork" for duct linings.

E. Refer to Division 23 section "System Identification" for installation of identification devices for piping, ductwork, and equipment.

1.03 QUALITY ASSURANCE:

A. Manufacturer’s Qualifications: Firms regularly engaged in manufacture of mechanical insulation products, of types and sizes required, whose products have been in satisfactory use in similar service for not less than 3 years.

B. Installer’s Qualifications: Firm with at least 5 years successful installation experience on projects with mechanical insulations similar to that required for this project.

C. Flame/Smoke Ratings: Provide composite mechanical insulation (insulation, jackets, coverings, sealers, mastics and adhesives) with flame-spread index of 25 or less, and smoke-developed index of 50 or less, as tested by ASTM E 84 (NFPA 255) method.

1.04 SUBMITTALS:

A. Product Data: Submit manufacturer's specifications and installation instructions for each type of mechanical insulation. Submit schedule showing manufacturer's product number, k-value, thickness, and furnished accessories for each mechanical system requiring insulation.

B. Maintenance Data: Submit maintenance data and replacement material lists for each type of mechanical insulation. Include this data and product data in maintenance manual.

1.05 DELIVERY, STORAGE AND HANDLING:

A. Deliver insulation, coverings, cements, adhesives and coatings to site in containers with manufacturer's stamp or label affixed showing fire hazard ratings of products.

B. Protect insulation against dirt, water and chemical and mechanical damage. Do not install damaged or wet insulation; remove from project site.

PART II - PRODUCTS

2.01 ACCEPTABLE MANUFACTURERS:

A. Manufacturer: Subject to compliance with requirements, provide mechanical insulation materials of one of the following (except as noted):
   1. Armstrong World Industries, Inc.
   2. Babcock and Wilcox Co., Insulating Products Div.
   3. CertainTeed Corp.
   4. Knauf Fiber Glass GmbH.
   5. Manville Products Corp.
   6. Owens-Corning Fiberglass Corp.
   7. Pittsburgh Corning Corp.
   8. Rubatex Corp.
   9. Thermacell

2.02 DUCTWORK INSULATION MATERIALS:

A. Rigid Fiberglass Ductwork Insulation: ASTM C 612, Class 1. Class 1 - 400oF (204oC); Class 2 - 400oF (204oC); Class 3 - 850oF (454oC); Class 4 - 1000oF (538oC); Class 5 - 1800oF (982oC); Class 1 - 10 lbs/ft3; Class 2, 3 and 4 - 12 lbs/ft3; class 5 - 20 lbs/ft3.

B. Flexible Fiberglass Ductwork Insulation: ASTM C 553, Type I, Class B-4. Type 1 - resilient, flexible; Class B-1 - 0.65 lbs/ft3; Class B-2 - 0.75 lbs/ft3; Class B-3 - 1.0 lbs/ft3; Class B-4 - 1.5 lbs/ft3; Class B-5 - 2.0 lbs/ft3; Class B-6 - 3.0 lbs/ft3; Type II - flexible; Class F-1 - 4.5 lbs/ft3; Type III - semirigid; Class F-2 - 4.5 lbs/ft3.

C. Jackets for Ductwork Insulation: ASTM C 921, Type I for ductwork with temperatures below ambient; Type II for ductwork with temperatures above ambient.

D. Ductwork Insulation Accessories: Provide staples, bands, wires, tape, anchors, corner angles and similar accessories as recommended by insulation manufacturer for applications indicated.

E. Ductwork Insulation Compounds: Provide cements, adhesives, coatings, sealers, protective finishes ad similar compounds as recommended by insulation manufacturer for applications indicated.

2.03 EQUIPMENT INSULATION MATERIALS:

A. Rigid Fiberglass Equipment Insulation: ASTM C 612, Class 2 to 400oF, Class 3 to 850oF, Class 4 to 1000oF. (Class 1 - 400oF (204oC); Class 2 - 400oF (240oC); Class 3 - 850oF (454oC); Class 4 - 1000oF (538oC); Class 5 - 1800oF (982oC); Class 1 - 10 lbs/ft3; Class 2, 3 and 4 - 12 lbs/ft3; Class 5 - 20 lbs/ft3.)

B. Flexible Fiberglass Equipment Insulation: ASTM C 553, B-4. (Type 1 - resilient flexible; Class B-1 - 0.65 lbs/ft3; Class B-2 - 0.75 lbs/ft3; Class B-3 - 01.0 lbs/ft3; Class B-4 - 1.5 lbs/ft3; Class B-5 - 2.0 lbs/ft3; Class B-6 - 3.0 lbs/ft3; Type II - flexible; Class F-1 - 4.5 lbs/ft3; Type III - semirigid; Class f-2 - 4.5 lbs/ft3.)

C. Flexible Unicellular Sheet Insulation: ASTM C 534. (Type I - tubular; Type II - sheet. For use between -40oF (-40oC) and 200oF (93oC) only.)

D. Jackets Material for Equipment Insulation: Provide pre-sized glass cloth jacketing material, not less than 8 ounces per square yard, or metal jacket at Installer's option, except as otherwise indicated.

E. Equipment Insulation Compounds: Provide adhesives, cements, sealers, mastics and protective finishes as recommended by the insulation manufacturer for applications indicated.

F. Equipment Insulation Accessories: Provide staples, bands, wire, wire netting, tape corner angles, anchors and stud pins as recommended by insulation manufacturer for applications indicated.

2.04 EXTERIOR DUCT JACKETING:

1. Provide and install jacketing for all insulated ductwork located outdoors.
    a. Exhausted or makeup duct work
        1) Embossed aluminum - 0.024 thickness.
        2) Preformed aluminum fitting covers.
        3) Banded, lockseam joints, pop-rivet seals.

PART III - EXECUTION

3.01 GENERAL:

A. Piping insulation shall be fiberglass one-piece preformed pipe insulation, class related to temperature, with all purpose (ASJ) fire retardant jacket, additional jacketing as noted.

B. Fittings and valves shall be insulated and covered with Zeston covers.

C. All cold water, chilled water, roof drains or any other lines upon which condensate moisture could form, shall have a vapor-proof jacket.

D. Fire and smoke hazard for a complete insulation system shall not exceed:
1. Flame spread - 25
2. Fuel contribution - 50
3. Smoke development - 50

E. Hangers shall not contact pipe where pipe is specified to be insulated.

3.02 INSPECTION:

A. Examine areas and conditions under which mechanical insulation is to be installed. Do not proceed with work until unsatisfactory conditions have been corrected in manner acceptable to Installer.

3.03 DUCTWORK SYSTEM INSULATION:

A. Insulation Not Required: Do not insulate lined ductwork.

B. Hot, Cold and Dual Temperature Ductwork:
1. Application Requirements: Insulate the following ductwork:
    a. Outdoor air intake ductwork between air entrance and fan inlet or HVAC unit inlet.
    b. HVAC supply ductwork between fan discharge, or HVAC unit discharge, and room terminal outlet.
        1) Insulate neck and bells of supply diffusers.
    c. HVAC return ductwork between room terminal inlet and return fan inlet, or HVAC unit inlet.
        1) Except omit insulation on return ductwork located in return air ceiling plenums.
    d. HVAC plenums and unit housings not pre-insulated at factory or lined.
    e. HVAC relief air plenums and ductwork.
2. Insulate each ductwork system specified above with one of the following types and thicknesses of insulation:
    a. Rigid fiberglass: Class 1, 1-1/2" thick, increase thickness to 2" in machine, fan and equipment rooms.
    b. Flexible Fiberglass: Type 1, Class B-4, 1-1/2” lb/ft3 density, 1-1/2" thick, application limited to concealed locations.

C. High and Medium Velocity Duct: Insulate externally with type 1, class B-4 (1-1/2 lb/ft3 density) 1-1/2" thick fiberglass faced duct wrap with factory applied foil scrim Kraft facing U.L. 723 label.

D. Duct Insulations:
1. Wrap insulation snugly on the ductwork such that maximum thickness is maintained. Butt all circumferential joints and overlap longitudinal joints a minimum of 2". Adhere insulation with 4" strips of Insulation Bonding Adhesive, at 8" on center.

2. On circumferential joints, staple the 2" flange of the facing with 9/16" flare-door staples on 6" centers and taped with minimum 3" wide foil reinforcing Kraft tape. Tape all pin penetrations or punctures in the facing.

3.04 EQUIPMENT INSULATION:

A. Cold Equipment (Below Ambient Temperature):
   1. Application Requirements: Insulate the following cold equipment:
   2. Roof drain bodies.
   3. Factory insulated surfaces do not need to be field insulated.
   4. Chilled water pump suction diffuser.

B. Insulate each item of equipment specified above with one of the following types and thicknesses of insulation:
   1. Fiberglass: 2" thick for surfaces above 35oF (2oC) and 3" thick for surfaces 35oF (2oC) and lower.
   2. Cellular Glass: 3" thick for surfaces above 35oF (2oC) and 4-1/2" thick for surfaces 35oF (2oC) and lower.
   3. Flexible Unicellular: 1" thick for cold surfaces.

3.05 INSTALLATION OF DUCTWORK INSULATION:

A. General: Install insulation products in accordance with manufacturer's written instructions, and in accordance with recognized industry practices to ensure that insulation serves its intended purpose.

B. Install insulation materials with smooth and even surfaces.

C. Clean and dry ductwork prior to insulating. Butt insulation joints firmly together to ensure complete and tight fit over surfaces to be covered.

D. Maintain integrity of vapor-barrier on ductwork insulation, and protect it to prevent puncture and other damage.

E. Extend ductwork insulation without interruption through walls, floors and similar ductwork penetrations, except where otherwise indicated.

F. Lined Ductwork: Except as otherwise indicated, omit insulation on ductwork where internal insulation or sound absorbing linings have been installed.

G. Ductwork Exposed to Weather: Protect outdoor insulation from weather by installing outdoor protective finish or jacketing as recommended by manufacturer.

H. Corner Angles: Install corner angles on external corners of insulation on ductwork in exposed finished spaces before covering with jacketing.

3.06 INSTALLATION OF EQUIPMENT INSULATION:

A. General: Install equipment thermal insulation products in accordance with manufacturer's written instructions, and in compliance with recognized industry practices to ensure that insulation serves intended purpose.

B. Install insulation materials with smooth and even surfaces and on clean and dry surfaces. Redo poorly fitted joints. Do not use mastic or joint sealer as filler for gapping joints and excessive voids resulting from poor workmanship.

C. Maintain integrity of vapor-barrier on equipment insulation and protect it to prevent puncture and other damage.

D. Apply insulation using staggered joint method for both single and double layer construction, where feasible. Apply each layer of insulation separately.

E. Coat insulated surfaces with layer of insulating cement, troweled in workmanlike manner, leaving smooth continuous surface. Fill in scored block, seams, chipped edges and depressions, and cover over wire netting and joints with cement of sufficient thickness to remove surface irregularities.

F. Cover insulated surfaces with all-service jacketing neatly fitted and firmly secured. Lap seams at least 2". Apply over vapor barrier where applicable.

G. Do not insulate over handholes, cleanouts, ASME stamp, and manufacturer's nameplate. Provide neatly beveled edge at interruptions of insulation.

H. Provide removable insulation sections to cover parts of equipment which must be opened periodically for maintenance: including metal vessel covers, fasteners, flanges, frames and accessories.

3.07 PROTECTION AND REPLACEMENT:

A. Replace damaged insulation which cannot be repaired satisfactorily, including units with vapor barrier damage and moisture saturated units.

B. Protection: Insulation Installer shall advise Contractor of required protection for insulation work during construction period to avoid damage and deterioration.

END OF SECTION 230700

This page intentionally left blank

SECTION 230800
COMMISSIONING OF HVAC

PART 1 GENERAL

1.01 RELATED DOCUMENTS

A. Drawings and general provisions of the Contract, including General and Supplementary Conditions and other Division 01 Specification Sections, apply to this Section.

1.02 SUMMARY

A. Section includes Cx process requirements for the following HVAC systems, assemblies, and equipment:
   1. Energy supply systems.
   2. Heat generation systems.
   3. Cooling generation systems.
   4. Central-station air-handling systems.
   5. Steam distribution systems.
   6. Air Distribution systems.
   7. Hydronic distrubution systems.
   8. Heating and cooling terminal and unitary equipment.
   9. HVAC controls.
   10. TAB verification.

B. Related Requirements:
   1. Section 019113 "General Commissioning Requirements" for general Cx process requirements and CxA responsibilities.
   2. For construction checklists, comply with requirements in various Division 23 Sections specifying HVAC systems, system components, equipment, and products.

1.03 DEFINITIONS

A. BAS: Building automation system.

B. Cx: Commissioning, as defined in Section 019113 "General Commissioning Requirements."

C. CxA: Commissioning Authority, as defined in Section 019113 "General Commissioning Requirements."

D. IgCC: International Green Construction Code.

E. "Systems," "Assemblies," "Subsystems," "Equipment," and "Components": Where these terms are used together or separately, they mean "as-built" systems, assemblies, subsystems, equipment, and components.

F. TAB: Testing, adjusting, and balancing.

1.04 INFORMATIONAL SUBMITTALS

A. Qualification Data: For BAS and HVAC testing technician.

B. Construction Checklists:
   1. Cx plan, including material, installation, and performance construction checklists for systems, assemblies, subsystems, equipment, and components relating to BAS and HVAC to be part of the Cx process and in accordance with requirements in Section 019113 "General Commissioning Requirements and ASHRAE 202."

C. Test Equipment and Instruments: For all test equipment and instruments to be used in conducting Cx tests by Div. 23 Subcontractor, provide the following:
   1. Equipment/instrument identification number.
   2. Planned Cx application or use.
   3. Manufacturer, make, model, and serial number.
   4. Calibration history, including certificates from agencies that calibrate the equipment and instrumentation.

5. Equipment manufacturers' proprietary instrumentation and tools. For each instrument or tool, identify the following:
    a. Instrument or tool identification number.
    b. Equipment schedule designation of equipment for which the instrument or tool is required.
    c. Manufacturer, make, model, and serial number.
    d. Calibration history, including certificates from agencies that calibrate the instrument or tool, where appropriate.

1.05 QUALITY ASSURANCE

A. BAS Testing Technician Qualifications: Technicians performing BAS Construction Checklist verification tests, Construction Checklist verification test demonstrations, Cx tests, and Cx test demonstrations are to have the following minimum qualifications:
    1. Journey level or equivalent skill level with knowledge of BAS, HVAC, electrical concepts, and building operations.
    2. Minimum three years' experience installing, servicing, and operating systems manufactured by approved manufacturer.
    3. International Society of Automation (ISA)-Certified Control Systems Technician (CCST) Level I.

B. HVAC Testing Technician Qualifications: Technicians to perform HVAC Construction Checklist verification tests, Construction Checklist verification test demonstrations, Cx tests, and Cx test demonstrations shall have the following minimum qualifications:
    1. Journey level or equivalent skill level; vocational school four-year-program graduate or an Associate's degree in mechanical systems, air conditioning, or similar field. Degree may be offset by three years' experience in servicing mechanical systems in the HVAC industry. Generally, required knowledge includes HVAC systems, electrical concepts, building operations, and application and use of tools and instrumentation to measure performance of HVAC equipment, assemblies, and systems.
    2. Minimum three years' experience that is to include installing, servicing, and operating systems manufactured by approved manufacturer.

C. Testing Equipment and Instrumentation Quality and Calibration:
    1. Capable of testing and measuring performance within the specified acceptance criteria.
    2. Be calibrated at manufacturer's recommended intervals with current calibration tags permanently affixed to the instrument being used.
    3. Be maintained in good repair and operating condition throughout duration of use on Project.
    4. Be recalibrated/repaired if dropped or damaged in any way since last calibrated.

D. Proprietary Test Instrumentation and Tools:
    1. Equipment Manufacturer's Proprietary Instrumentation and Tools: For installed equipment included in the Cx process, test instrumentation and tools manufactured or prescribed by equipment manufacturer to service, calibrate, adjust, repair, or otherwise work on its equipment or required as a condition of equipment warranty, shall comply with the following:
        a. Be calibrated by manufacturer with current calibration tags permanently affixed.
        b. Include a separate list of proprietary test instrumentation and tools in operation and maintenance manuals.
    2. HVAC proprietary test instrumentation and tools become property of Owner at the time of Substantial Completion.

PART 2 PRODUCTS (NOT USED)

PART 3 EXECUTION

3.01 CX PROCESS:

A. Perform Cx process in accordance with Section 019113 "General Commissioning Requirements" for BAS and HVAC and in accordance with the following:
   1. ASHRAE 202.
   2. Commissioning standards acceptable to the authority having jurisdiction.

3.02 CONSTRUCTION CHECKLISTS

A. Preliminary detailed construction checklists are to be prepared under Section 019113 "General Commissioning Requirements" for each BAS and HVAC system, assembly, subsystem, equipment, and component required to be commissioned, as detailed in ASHRAE 202. Contractor performs the following:
   1. Review BAS and HVAC preliminary construction checklists and provide written comments on checklist items where appropriate.
   2. Return preliminary Construction Checklist with review comments within 10 days of receipt.
   3. When review comments have been resolved, the CxA will provide final construction checklists marked "Approved for Use, (date)."
   4. Use only construction checklists marked "Approved for Use, (date)" When performing tests. Mark construction checklists in the appropriate place as indicated Project events are completed, and provide pertinent details and other information.

B. Prepare preliminary detailed construction checklists for each BAS and HVAC system, assembly, subsystem, equipment, and component required to be commissioned, as detailed in ASHRAE 202.
   1. Submit preliminary construction checklists to CxA and Designer for review.
   2. When review comments have been resolved, the CxA will provide final construction checklists marked "Approved for Use, (date)."
   3. Use only construction checklists, marked "Approved for Use, (date)" when performing tests. Mark construction checklists in the appropriate place, as indicated Project events are completed and provide pertinent details and other information.

C. Additional systems required to be commissioned:
   1. Energy supply systems, including the following:
      a. Fuel gas supply.
   2. Rooftop Equipment
      a. Packaged rooftop units.
      b. Packaged make-up air units
      c. Evaporative Coolers
      d. Rooftop Exhaust Fans
   3. Fume Capture Systems
      a. Welding Fume Exhaust Arms
      b. Welding Fume Collectors
      c. Downdraft Exhaust Tables
      d. Hood Exhaust Systems
   4. Air duct systems, including the following:
      a. Duct systems.
      b. Air-duct accessories, including volume dampers, fire and smoke dampers, turning vanes, sound attenuators, and flexible connectors.
      c. Duct-mounted access doors and panels.
      d. Hangers and supports.
   5. Refrigerant piping, including the following:
      a. Refrigerant piping, fittings, and specialties.
      b. Refrigerant charge.

c. Sleeves and sleeve seals.
d. Meters and gauges.
e. General-duty and specialty valves.
f. Hangers and supports.

6. Heating and cooling terminal and unitary equipment, including the following:
   a. Unit heaters.
   b. Fan-coil units.
   c. Unitary heating and cooling equipment.
7. Vibration isolation systems.
8. Controls and instrumentation, including the following:
   a. Energy monitoring and recording system.
   b. Controllers and sensors.
   c. Automatic control valves, dampers, and actuators.
   d. Control interface with fans, pumps, dampers, and other equipment and systems.
   e. Demand-control systems.
9. TAB Verification:
   a. Airflow.
   b. Water flow.
   c. Space pressurization.
10. Documentation:
    a. Mechanical systems manuals.
    b. Documentation of required commissioning.
11. Mechanical insulation, including the following:
    a. Duct and plenum insulation.
    b. HVAC piping insulation.

3.03 CX TESTING PREPARATION

A. Certify that HVAC systems, subsystems, and equipment have been installed, calibrated, and started and that they are operating in accordance with the Contract Documents and approved submittals.

B. Certify that HVAC instrumentation and control systems have been completed and calibrated, point-to-point checkout has been successfully completed, and systems are operating in accordance with their design sequence of operation, Contract Documents, and approved submittals. Certify that all sensors are operating within specified accuracy and all systems are set to and maintaining set points as required by the design documents.

C. Certify that TAB procedures have been completed and that TAB reports have been submitted, discrepancies corrected, and corrective work approved.

D. Set systems, subsystems, and equipment into operating mode to be tested in accordance with approved test procedures (e.g., normal shutdown, normal auto position, normal manual position, unoccupied cycle, emergency power, and alarm conditions).

3.04 CX TEST CONDITIONS

A. Perform tests using design conditions, whenever possible.
   1. Simulated conditions may, with approval of Architect, be imposed using an artificial load when it is impractical to test under design conditions. Before simulating conditions, calibrate testing instruments. Provide equipment to simulate loads. Set simulated conditions as directed by CxA, and document simulated conditions and methods of simulation. After tests, return configurations and settings to normal operating conditions.
   2. Cx test procedures may direct that set points be altered when simulating conditions is impractical.
   3. Cx test procedures may direct that sensor values be altered with a signal generator when design or simulating conditions and altering set points are impractical.

B. If tests cannot be completed because of a deficiency outside the scope of the HVAC system, document the deficiency and report it to Architect. After deficiencies are resolved, reschedule tests.

C. If seasonal testing is specified, complete appropriate initial performance tests and documentation, and schedule seasonal tests.

3.05 CX TESTS COMMON TO HVAC SYSTEMS

A. Measure capacities and effectiveness of systems, assemblies, subsystems, equipment, and components, including operational and control functions, to verify compliance with acceptance criteria.

B. Test systems, assemblies, subsystems, equipment, and components for operating modes, interlocks, control responses, responses to abnormal or emergency conditions, and response in accordance with acceptance criteria.

C. Coordinate schedule with, and perform Cx activities at the direction of, CxA.

D. Comply with Construction Checklist requirements, including material verification, installation checks, startup, and performance test requirements specified in Division 23 Sections specifying HVAC systems and equipment.

E. Provide technicians, instrumentation, tools, and equipment to perform and document the following:
   1. Cx Construction Checklist verification tests.
   2. Cx Construction Checklist verification test demonstrations.

3.06 TAB VERIFICATION

A. Prerequisites: Completion of "Examination" Article requirements and correction of deficiencies, as specified in Section 230593 "Testing, Adjusting, and Balancing for HVAC."

B. Completion of "Preparation" Article requirements for preparation of a TAB plan that includes strategies and step-by-step procedures, and system-readiness checks and reports, as specified in Section 230593 "Testing, Adjusting, and Balancing for HVAC."

C. Scope: HVAC air systems and hydronic piping systems.

D. Purpose: Differential flow relationships intended to maintain air and water pressurization differentials between the various areas of Project.

E. Conditions of the Test:
   1. Cx Test Demonstration Sampling Rate: As specified in "Inspections" Article in Section 230593 "Testing, Adjusting, and Balancing for HVAC."
   2. Systems operating in full heating mode with minimum outside-air volume.
   3. Systems operating in full cooling mode with minimum outside-air volume.
   4. For measurements at air-handling units with economizer controls; systems operating in economizer mode with 100 percent outside air.

F. Acceptance Criteria:
   1. Under all conditions, rechecked measurements comply with "Inspections" Article in Section 230593 "Testing, Adjusting, and Balancing for HVAC."
   2. Additionally, no rechecked measurement shall differ from measurements documented in the final report by more than the tolerances allowed.
   3. Under all conditions, where the Contract Documents indicate a differential in airflow between supply and exhaust and/or return in a space, the differential relationship shall be maintained.

END OF SECTION 230800

This page intentionally left blank

SECTION 230800
MECHANICAL SYSTEMS COMMISSIONING

PART 1-GENERAL

1.01 RELATED WORK

A. All other sections in Division 21, 22, and 26

1.02 DESCRIPTION

A. The purpose of the commissioning process is to provide the Owner/operator of the facility with an elevated level of assurance that the mechanical and associated electrical Systems have been installed in the prescribed manner and operate within the performance guidelines set in the design intent. The Commissioning Authority shall provide the Owner with an unbiased, objective view of the systems installation, operation, and performance. This process is not to take away or reduce the responsibility of the design professionals or installing contractors to provide a finished product. Commissioning is intended to enhance the quality of system start-up and aid in the orderly transfer of systems to beneficial use by the owner. The Commissioning Authority will be a member of the construction team, cooperating and coordinating all commissioning activities with the design professionals, construction manager, contractors, subcontractors, manufacturers, and equipment suppliers.
   1. SCOPE
   2. The HVAC systems commissioning shall include a demonstration by the Contractor of each equipment control sequence. The commissioning process shall demonstrate that each control sequence (including alarms and lead/lag equipment operations) and the associated test and balance data all correspond with the contract documents and with the final test and balance report. The finalized temperature control software with graphic displays shall be installed and operational (at all required locations) and the final test and balance report shall be provided for review and acceptance by the Owner and the Engineer a minimum of 10 days prior to requesting date(s) for the HVAC systems commissioning. Additionally, the temperature control contractor and the test and balance contractor (along with any other necessary parties) shall complete a 'dry-run commissioning' and shall certify in writing that all equipment is operating in accordance with the finalized written control sequences prior to requesting date(s) for the actual official on-site HVAC systems commissioning session(s).

B. The HVAC systems commissioning shall demonstrate that the quantities read and displayed by the control system are in agreement with actual' tested quantities (e.g.. variable air volume box cfm readings. minimum outside air cfm readings. air temperatures. water temperatures. duct static pressures, building static pressures, etc.). The HVAC systems commissioning shall also demonstrate that all quantities listed in the final test and balance report (cfm readings. gpm readings. temperature differences, pressure drops. etc.) are/were correctly reported.

C. The Contractor shall schedule a pre-commissioning pre-balancing meeting with the Owner's representatives at least two weeks prior to beginning the testing and balancing. This meeting will be utilized to review and discuss the finalized control sequences and to verify specific testing and balancing requirements. The final approved temperature control sequences will be distributed and reviewed during this meeting. The final control sequences will include additional detail and/or modifications to the original sequences contained in the contract documents (since such details are commonly omitted from the Mechanical Engineer's original written control sequences and are developed after the equipment submittals and the temperature control system submittals are received). The work associated with those additions and or modifications shall be provided by the temperature control contractor and the test and balance contractor at no additional cost to the Owner.

D. The Contractor shall furnish a set of two-way radios which will be utilized to expedite the commissioning process (typically a minimum of 3 fully charged radios will be necessary and required for the duration of the commissioning process).

E. The demonstration of each control sequence shall be performed under conditions which simulate as close to an actual condition as possible. The Contractor shall provide all necessary materials and temporary system modifications as required to 'false-load' the system(s) as required to demonstrate the desired sequences (including appropriate gas required to simulate a refrigerant leak in the chiller room when applicable). The temperature control system software shall be capable of temporarily overriding analog inputs in order to facilitate demonstration of the temperature control sequences. In cases where the project does not include an on-site computer in the building being commissioned the temperature control contractor shall provide a laptop computer equipped with the complete graphic interface software package (the software on the laptop computer shall be identical with the software provided to the Owner).

F. HVAC systems commissioning shall be conducted with representatives from the following entities (the required participants shall be confirmed with the commissioning agent prior to scheduling the commissioning).
   1. General Contractor (with a complete set of asbuilt plans and specifications).
   2. Mechanical Contractor (with a complete set of mechanical equipment operating and maintenance manuals that include a full set of submittals).
   3. Temperature Control Contractor (with a laptop computer loaded with the finalized programming and graphic interface software including asbuilt drawing).
   4. Test and Balance Contractor (with a complete set of testing apparatus as utilized during testing and balancing and a complete copy of the final test & balance report).
   5. Factory-authorized technicians for all major equipment (chillers, boilers, cooling towers, variable frequency drives, pumps, etc.). Technicians shall be available to verify equipment start-up has been properly completed and to make any necessary or desired adjustments to control settings.
   6. Water Treatment Contractor (with copies of final water treatment reports).
   7. Mechanical Engineer and or his designated representative.
   8. The elcetrical contractor (with complete electrical asbuilt drawings).
   9. Owner’s designated representative.

G. The aforementioned representatives shall be present during all portions of the testing (and re-testing as required) and shall be equipped to promptly remedy any deficiencies discovered during the commissioning process.

H. The temperature control contractor and the test and balance contractor (along with any other necessary parties) shall conduct a 'dry-run commissioning' to verify that all of the previously listed commissioning requirements are complete prior to requesting a date for the actualiofficial on-site commissioning session(s).

I. Should any of the aforementioned requirements not be met on the date that the commissioning process commences and or if deficiencies are observed during the commissioning process the commissioning will be considered a failure and the deficiencies will be required to be remedied and then addressed in writing prior to requesting a date for re-commissioning. There will be no additional costs allowed to the Contractor for re-commissioning sessions as may be required to address issues that are found to be in non-compliance with the requirements of this specification.

J. The Contractor shall include adequate time periods for both the 'dry-run commissioning' and the actual official on-site commissioning in the project schedule. The necessary time periods shall be carefully reviewed with all of the appropriate subcontractors to ensure that the subcontractors are in agreement with the time allotted for each scheduled task.

K. Completion and acceptance of the HVAC systems commissioning shall be a condition of Substantial Completion. The building shall be considered 'not ready to utilize for its intended use' until such time that the HVAC systems commissioning is successfully completed.

L. The responsibilities of the General/Managing Contractor shall also include:
   1. Coordinate and manage the Contractors commissioning activities.

2. Coordinate directly with each subcontractor and vendor with respect to their responsibilities and contractual obligations for commissioning.
3. Attend periodic on-site commissioning meetings as required by the Commissioning Authority.
    a. Integrate commissioning schedule into the master construction activity schedule. Update schedule at specified intervals.
4. Conduct installation verification inspections.
5. Review controls documentation and interface with other systems.
    a. Obtain then review operation & maintenance information and as-built drawings provided by the various subcontractors and vendors.
    b. Note any inconsistencies or deficiencies in system operations. Enforce system compliance or recommend to the owner's Representative modifications to system design that will correct or enhance system performance.
6. Coordinate Commissioning Authority in testing & witnessing after verifying that pretests have been satisfactorily conducted and final tests are ready to be performed.
7. Be present during training sessions to direct video recording, present training and
        1) direct the presentations of others.
8. Be present during start-up activities to direct and witness execution of start-up.
    a. Monitor performance of testing, adjusting and balancing activities to ensure acceptable results and use of approved methods and instrumentation.
    b. Ensure that necessary test instrumentation is available during verification and functional performance testing, and that instruments meet quality and calibration requirements and are in good working order.
    c. Be present during verification and functional performance testing and retesting to direct and witness execution of tests.
9. If a commissioning test fails, determine the cause of failure, direct timely correction of deficiency and then retest.
        1) Track commissioning deficiencies until correction and retesting is successful.
            (a) The functions and responsibility of the Commissioning Authority shall include:
10. Responsibility: The primary point of responsibility is to inform the Contractor and the Owner on the status, integration, and performance of systems within the facility.
11. Information: The Commissioning Authority shall function as a catalyst and initiator to disseminate information and assist the design and construction teams in the completion of the construction process. This shall include system completeness, performance, and adequacy to meet the intended performance standards of each system. Services include construction observation, spot testing, verification, and functional performance testing, and providing performance and operating information to the responsible parties, e.g., contractors, design professionals, and the Owner.
12. Quality Assurance: Assist the responsible parties to maintain a high-quality level of installation and system performance.
    a. Observation of tests: Commissioning Authority shall observe, and coordinate testing as required to ensure system performance meets the design intent.
13. Documentation of tests: Commissioning Authority shall document the results of the performance testing directly and/or ensure that all testing is documented by the appropriate technicians. The Commissioning Authority shall provide standard forms to be used by all parties for consistency of approach and type of information to be recorded.
14. Resolution of disputes: The Commissioning Authority is to remain an independent party present on the project with specific knowledge of the subject. Should disputes arise, the Commissioning Authority shall perform research to determine the scope and extent of the problem and educate the involved parties as to the nature and extent of the problem. This shall include technical and financial aspects of the dispute, including assistance to help identify who the responsible parties are to implement corrective action. The Owner/Architect shall preside over resolution of the problem.

15. Deficiencies: Provision of technical expertise to oversee and verify the correction of deficiencies found during the commissioning process.
16. Provision of technical expertise to review and edit operating and maintenance descriptions by system.
17. SYSTEMS
18. piping, balancing, controls, etc. that are defined in the entire cumulative sections of division 22 and 23 will go through commissioning. The below list is a representative sample of items that are typically commissioned:
    a. Mechanical & central plant systems including electrical that connects to mechanical.
19. Variable frequency drives (if applicable).
    a. ATC control systems, hardware, software, and documentation.
20. All plumbing systems.
21. All mechanical and HVAC systems.
    a. All lab equipment, RO system, Lab Water, Lab Gases, and any other system specified in the specifications, contractor documents, and program documents.
22. COORDINATION
23. The Commissioning authority shall receive a copy of all construction documents, addenda, change orders, and appropriate approved submittals and shop drawings directly from the Architect and Contractor.
24. The Commissioning Authority shall disseminate written information and documents to all responsible parties relative to the nature and extent of the communication.
25. The Commissioning Authority is primarily responsible to the Owner, and as such, shall regularly appraise the Architect, the Contractor, and the Owner of progress, pending problems and/or disputes, and shall provide regular status reports on progress with each system. Any potential change in the contractual and/or financial obligations of the owner (credits, change orders, schedule changes, etc.) shall be identified and quantified as soon as possible.
26. The Commissioning Authority shall coordinate the schedule of commissioning activities
    a. before
27. the
    a. entire Mechanical system is completed.

1.03 SCHEDULE

1. Commissioning of systems shall proceed per the criteria established, in the specific sections that follow, with activities to be performed on a timely basis. The Commissioning Authority shall be available to respond promptly to avoid construction delays.
2. Start-up and testing of systems may proceed prior to completion of systems to expedite progress. However, the Commissioning Authority shall not perform testing and verification services that are the primary responsibility of the contractor/vendor in advance of their own testing and verification.
3. Problems observed shall be addressed immediately, responsible parties notified, and actions to correct said deficiencies shall be coordinated in a timely manner.
4. Contractor schedules and scheduling is the responsibility of the Contractor. The Commissioning Authority shall provide commissioning scheduling information to the contractor for review and planning activities.
5. The following list is a general set of tasks and criteria along with an approximate duration for each task. This list is intended to be utilized as a guideline for creating an appropriate schedule for all of the work related to HVAC systems commissioning. The actual time required for each task will vary depending on the size and complexity of the mechanical systems on the particular project. Determination of the actual time required for each task is the responsibility of the Contractor and shall be developed utilizing thorough review and discussion with all of the involved subcontractors prior to preparing and submitting the proposed schedule. A typical project requires between 4 and 8 weeks from start of test and balance to scheduling the dates for the formal on-site commissioning session(s).

a. Pre-commissioning/pre-balancing meeting will be held 2 weeks prior to start of testing and balancing).
   1) Print and distribute final test and balance reports (typically a 1 to 2 week process).
   2) Temperature control contractor (with participation from test and balance contractor and mechanical contractor as necessary) conducts 'dry-run commissioning' (utilizing the Commissioning 'HVAC Systems Commissioning Checklist' as a guide) and tuning all control loops (typically 1 to 2 week process). Note that this task occurs after testing and balancing is complete.

6. Schedule formal on-site HVAC systems commissioning dates (typically a 1 to 3 week process).

1.04 RELATED WORK SPECIFIED ELSEWHERE

1. Commissioning requires support from the contractors. The commissioning process does not relieve any contractors from their obligations to complete all portions of work in a satisfactory manner.

PART 2 - PRODUCTS (NOT USED) PART 3 - EXECUTION

2.01 COMMISSIONING PLAN, SCHEDULE, AND SUBMITTAL PROCESS

A. The Commissioning Authority shall develop and submit a schedule for the commissioning process which is integrated with the construction schedule. Included shall be the required work by all team members (Commissioning Authority, design team, contractors, and the Owner). Overlay with the construction schedule, and include time for test and balance, verification, and functional performance testing.

B. The subcontractor, supplier and manufacturer are responsible to submit with initial submittals a line-by-line submittal compliance document. The compliance document will follow the specification that the submittal is in reference too. The compliance document will have one of the following for each paragraph of the specification: Comply, Exception, or Unable to Comply. With each Exception and Unable to Comply the compliance document will have a detailed explanation.

C. The subcontractor, supplier and manufacturer shall attend a submittal review meeting before any piece of equipment shall be ordered. This meeting will be held and conducted by the Commissioning Authority at a place designated by Commissioning Authority (which typically is the General Contractors Trailer). During this meeting, the CxA, Engineer, and Owner will review the submittal compliance document.

D. The submittals will be marked with Reviewed, Reviewed as Noted, Defer to Engineer, Note, or Revise and Resubmit. Only “Revise and Resubmit” items will have the expectation of a re-submittal. If any item is marked as Revise and Resubmit contractor shall pay all expenses incurred by the CX Authority for the re-review process. This is outlined in section 3.7.
   1. CONSTRUCTION OBSERVATION
      a. This is an additional and separate activity provided by the design team. Construction observation is required as part of the commissioning and coordination process provided by the C/A.
   2. TEST AND BALANCE
      a. The test and balance firm shall accomplish air & water balance. The Commissioning Authority shall spot check this work to verify accuracy of results. If spot testing indicates balancing is not in
         1) compliance with the contract documents “ALL” mechanical systems may be retested as noted in
         2) section 1.2 Scope.
   3. VERIFICATION AND FUNCTIONAL PERFORMANCE TEST PROCEDURES
      a. Commissioning Authority shall develop and document the commissioning procedure to be used. Include a performance checklist and performance test data sheets for each system based on actual system configuration. These procedures shall be

reviewed by the appropriate design engineers for technical depth, clarity of documentation and completeness. Emphasis shall be placed on testing
1) procedures that shall determine actual system performance and compliance with the design intent.

b. Most mechanical equipment requires safety devices to stop and/or prevent operation unless minimum safety standards or conditions are met. These may include adequate oil pressure, proof- of-flow, non-freezing conditions, maximum static pressure, maximum head pressure, etc. The Commissioning Authority shall observe the actual performance of safety shutoffs in a real or closely simulated condition of failure.

E. Systems may include safety devices and components that control a variety of equipment operating as a system. Interlocks may be hard-wired or operate from software. The Commissioning Authority shall verify operation of these interlocks.

F. The Commissioning Authority shall determine the acceptance procedures for each system within MEP divisions as required. The acceptance procedures shall incorporate the commissioning standards and successful testing results as referred to throughout mechanical and electrical specifications.
1. The temperature control system shall have all I/O (input/output) points individually verified for proper function, calibration, and operation. The Commissioning Authority shall review proposed testing procedures, report formats, and observe enough field testing to confirm that all 1/0 points have been properly tested.
2. All control sequence of operation strategies, alarm generation and reporting shall also be reviewed for proper operation and verified by the Commissioning Authority.
3. The central workstation graphics, point assignments, alarm messages, and logging functions shall be verified.
4. A minimum Four (4) weeks of “Clean” trending (no mechanical, software, control loop or Building Management System “BMS” failures) shall be provided on “Any” or “All” BMS systems & points as directed by the C/A. Clean Trending shall be a requirement that is completed prior to Substantial Completion.
5. Trending shall be submitted in a graphical Microsoft 2007 Format including all data submitted in the excel workbook. Graphs shall be line graphs shown on printable 11 x 17 pages. Graphs shall have included annotations showing compliance with contract documents.
6. ALL points shall be trended and submitted in the above format and as outlined by the Cx Authority. Contractor shall submit during submittal process what shall be trended per each graph to show functionality.

G. The appropriate contractor and vendor(s) shall be informed of what tests are to be performed and the expected results. Whereas some test results and interpretations may not become evident until the actual tests are performed, all parties shall have a reasonable understanding of the requirements. The Commissioning Plan shall address those requirements and be distributed to all parties involved with that system.

H. Acceptance procedures shall confirm the performance of systems to the extent of ' the design
1) intent. When a system is accepted, the Owner shall be assured that the system is complete, works as intended, is correctly documented, and operator training has been performed.

2.02 HVAC SYSTEMS COMMISSIONIG CHECKLIST A.

1. Review location of outside air temperature sensor.
2. Verify: calibrate outside air sensor (dry bulb & relative humidity). Verify wet bulb temperature calculation.
3. Verify outside air economizer control sequence and operation.
4. Verify direct/indirect cooling sequence is funtioning as required (if applicable).
5. Verify programming of vfd’s (minimum speed, auto restart, input/output speed calibration, alarm on failure, upward and downward ramp time settings).
6. Verify vav box maximum, minimum, and reheat cfm air flows (random verification).

7. Verify vav box discharge air temperature (in both heating and cooling modes).
8. Verify diffuser air flows at vav box maximum cfm (random verification).
9. Verify set-up of all required alarms (review automatic dial or automatic e-mail set-up).
10. Verify calibration of air filter alarms.
11. Verify set-up of occupancy schedules.
    a. Verify set-up of holiday schedules.
12. Verify unoccupied mode operation (damper and valve positions).
13. Verify night set-back (heating) control sequence.
14. Verify night set-back (cooling) control sequence.
15. Verify mixed air control sequence.
16. Verify morning warm-up control sequence.
17. Verify room sensor programming. displays. and calibration.
18. Verify room sensor unoccupied mode override feature.
19. Verify pump lead/lag programming and alarm display.
20. Verify boiler lead/lag programming and alarm display.
21. Verify chiller lead/lag programming and alarm display.
22. Verify chiller(s) control sequence(s).
23. Verify chiller room emergency shut-down switch locations and operation.
24. Verify chiller room refrigerant leak detection system
25. Verify that mechanical system roof penetrations are properly installed (per roofing details).
26. Verify global. remote, and local room setpoint functions.
27. Verify adjustment range for local room temperature setpoints.
28. Verify equipment room temperature setpoints and deadbands.
29. Verify that all required spare parts (filters. belts. etc.) have been provided.
30. Verify acceptable air and noise levels throughout the building.

2.03 FUNCTIONAL PERFORMANCE TESTING - OBSERVATION

A. The Contractor shall do the functional performance testing. The Commissioning Authority shall direct and witness these tests. -

B. Tests shall be completed comprehensively and to the extent necessary to enable the Commissioning Authority to assure the Owner and design professional that the systems do perform per the design intent.
    1. RE-TESTTNG

C. Contractor shall, at no additional cost to the Owner, repeat the complete verification test procedure for each test for which acceptable results are not achieved. Repeat tests until acceptable results are achieved.

D. Contractor shall compensate the Owner for costs incurred as the result of tests review or inspection repeated. This includes the costs for the Commissioning Authority, Design Architect, Design Engineers, and Owner’s personnel for billed costs (including travel expenses) for the extraordinary participation of the Owners Representative, Architect, Commissioning Authority, or owner’s staff.

E. All retesting, inspection, or review of equipment or re reviewing of startup sheets or re reviewing of test and balance or re reviewing of controls or re-reviewing of submittals shall be billed at an hour of $250 per hour with a minimum of 4 hours billed per session.

2.04 CORRECTION OF DEFICIENCIES

A. Correct functional performance test deficiencies promptly and schedule retest.

B. Corrections during verification or functional performance test are prohibited to avoid consuming the time of personnel waiting for the test but not involved in making the correction. Exceptions will be allowed if the cause of the failure is obvious and corrective action can be completed in less than five minutes. If corrections are made under this exception, the failure shall be noted on the test data form. A new test data form, marked retest, shall be initiated after the correction has been made. The entire test procedure shall be repeated.

2.05 SOFTWARE DOCUMENT

A. Review detailed software documentation for all DDC control systems. This includes review of vendor documentation, their programming approach and the specific soft-ware routines applied to this project. Discrepancies in programming approaches and/or sequences shall be reported and coordinated to provide the Owner with the most appropriate, simple, and straightforward approach to software routines.

2.06 OPERATING AND MAINTENANCE (O&M) MANUALS

A. The Commissioning Authority shall review the draft form of the O&M manuals provided by the Mechanical contractor and the Electrical contractor. The review process shall verify that O&M instructions meet specifications and are included for all equipment furnished by the contractor, and that the instructions and wiring diagrams are specific (edited where necessary) to the actual equipment provide for this project.

B. Published literature shall be specifically oriented to the provided equipment indicating required operation and maintenance procedures, parts lists, assembly/disassembly diagrams, and related information.

C. The contractor shall incorporate the standard technical literature into system specific formats for this facility as designed and as actually installed. The resulting O&M information shall be system specific, concise, to the point, and tailored specifically to this facility. The Commissioning Authority shall review and edit these documents as necessary for final corrections by the contractor.

D. The O&M manual review, and coordination efforts shall be completed prior to Owner training sessions, as these documents are to be utilized in the training sessions.

2.07 TRAINING

A. Schedule and coordinate training sessions for the Owner’s staff for each system. Training shall be in a classroom setting with the appropriate schematics, handouts, and visual/audio training aids on- site with equipment.

B. The Commissioning Authority review agenda, which shall be submitted at least four weeks before training, and shall audit the training sessions.

C. The appropriate installing contractors shall provide training on all the major systems per specifications, including peculiarities specific to this project.

D. The equipment vendors shall provide training on the specifics of each major equipment item including philosophy, troubleshooting, and repair techniques.

a. The automatic control vendor shall provide training on the control system per their specification section.

2.08 RECORD DRAWINGS

a. The Commissioning Authority shall review the as-built contract documents to verify incorporation of both design changes and as-built construction details. Discrepancies noted shall be corrected by the appropriate party.

2.09 EXCLUSIONS

A. Responsibility for construction means and methods: The Commissioning Authority is not responsible for construction means, methods, job safety nor any other construction management functions on the job site.

B. C. Hands-on work by the Commissioning Authority: The contractors shall provide all services requiring tools or the use of tools to start-up, test, adjust, or otherwise bring equipment and systems into a fully operational state. The Commissioning Authority shall coordinate and observe these procedures (and may make minor adjustments) but shall not perform construction or technician services other than verification of testing, adjusting, balancing, and control function

END OF SECTION 230800

SECTION 230900
MECHANICAL CONTROL SYSTEMS

PART I - GENERAL

1.01 REFERENCE STANDARDS

A. NFPA 90A - Standard for the Installation of Air-Conditioning and Ventilating Systems; 2024.

1.02 RELATED DOCUMENTS:

A. Drawings and general provisions of Contract, including General and Supplementary Conditions and Division 01 Specification sections, apply to work of this section.

B. Division 23 General Mechanical Requirements sections apply to work of this section.

1.03 SUMMARY:

A. Extent of control systems work required by this section is indicated on drawings and schedules, and by requirements of these control related sections.
   1. See following sections for types of Control Systems included as a part of this section.
      a. Section 23 09 23 - Direct Digital Control Systems
      b. Section 23 09 33 - Electric Control Systems
      c. Control sequences are specified in this section under: "Sequence of Operation".

B. Related Work:
   1. Refer to other Division 23 sections for installation of instrument wells, valve bodies, and dampers in mechanical systems. Not work of this Section.
   2. Coordinate with all Division 23 vendors of mechanical equipment, i.e., Rooftop Unit, Makeup Air Units, Evaporative Coolers, Rooftop Exhaust Fans, etc., which are responsible for furnishing related control sensors and switches which are to be installed in the field by the Mechanical Controls Contractor.
   3. Coordinate with Division 26 for fire alarm connections on VFD's, etc.

C. Refer to Division 26 sections for the following work.
   1. Power supply wiring from power source to power connection on controls and/or unit control panels. Includes starters, disconnects, and required electrical devices, except where specified as furnished, or factory-installed, by manufacturer.
   2. Interlock wiring between electrically-operated equipment units; and between equipment and field-installed control devices.
      a. Interlock wiring specified as factory-installed is work of this section.

D. Provide the following electrical work as work of this section, complying with requirements of Division 26 sections:
   1. Control wiring between field-installed equipment, controls, indicating devices, and unit control panels.
   2. 120 volt service required by control systems.
   3. Control conduit for control wiring.
   4. Control Wiring:
      a. In concealed locations above lay-in ceilings low voltage conductor may be installed without conduit. Low voltage conductor shall be UL listed Article 725 Plenum Cable. Install the cable parallel to building walls.
      b. In all other building areas, i.e. electrical rooms, mechanical rooms, above "hard" ceilings, within walls, open areas, etc., all control wiring shall be installed in conduit per National Electric Code. Installation shall be square with the walls of the buildings.
      c. Number and code all wiring.
      d. Use no wire smaller than 16 gauge, no conduit smaller than 1/2".

E. Participate in "System Commissioning, Testing and Balancing".

1.04 QUALITY ASSURANCE:

A. MANUFACTURERS QUALIFICATIONS: Firms regularly engaged in manufacture of electric control equipment, of types and sizes required, whose products have been in satisfactory use in similar service for not less than 5 years. This project shall be base bid using Honeywell control components.

B. INSTALLER'S QUALIFICATIONS: Firms and workmen specializing and experienced in electric control system installations for not less than 5 years. Installing by Wasatch Controls. Firms regularly engaged in the manufacturing, design, and programming of specified and required control components, materials and systems. Approved contractor Wasatch Controls.

1.05 SUBMITTALS:

A. Product Data: Submit manufacturer's technical product data for each control device furnished, indicating dimensions, capacities, performance characteristics, electrical characteristics, finishes of materials, and including installation instructions and start-up instructions.

B. Shop Drawings: Submit shop drawings for each control system, containing the following information:
   1. Schematic flow diagram of system showing fans, pumps, elements, dampers, valves, and control devices, etc.
   2. System architecture/communications diagram showing each system controller and interrelated Bacnet MS/TP or Lon Works bus connections.
   3. Control valve and damper schedules.
   4. Floor Plans with control device/enclosure locations.
   5. Label each control device with setting or adjustable range of control.
   6. Indicate all required pneumatic tubing and/or electrical wiring. Clearly differentiate between portions of work that are factory-installed and portions to be field-installed. Note contract responsibility to provide complete system regardless of delegation. Completely interface with and show existing installation in the existing building.
   7. Provide control panel wiring diagrams.
   8. Provide details of faces of control panels, including controls, instruments, and labeling.
   9. Include verbal written description of sequence of operation. Confirm correct function of proposed sequences.

C. Samples: Submit sample of each type of proposed thermostat cover.

D. Maintenance Data: Submit maintenance instructions and spare parts lists. Include this data, product data, and shop drawings in maintenance manuals; in accordance with requirements of Section 230100.

1.06 AS-BUILT DOCUMENTATION:

A. After a successful acceptance demonstration, the Controls Contractor shall submit as-built drawings of the completed mechanical controls for the project to be incorporated into the overall mechanical as-built drawings for final approval. After receiving final approval, supply "6" complete 11x17 as-built drawing sets, together with AutoCad diskettes to the Owner.

1.07 OPERATION AND MAINTENANCE MANUALS:

A. Submit two copies of operation and maintenance manuals. Include the following:
   1. Manufacturer's catalog data and specifications on sensors, transmitters, controllers, control valves, damper actuators, gauges, indicators, terminals, and any miscellaneous components used in the system.
   2. An operator's manual which will include detailed instructions for all operations of the system.
   3. An operator's reference table listing the addresses of all connected input points and output points. Settings shall be shown where applicable.
   4. A programmer's manual which will include all information necessary to perform programming functions.

5. A language manual which will include a detailed description of the language used and all routines used by the system.
6. Flow charts of the control software programs utilized in the DDC system.
7. Flow charts of the custom software programs utilized in the DDC system as approved.
8. Complete program listing file and parameter listing file for all programs.
9. A copy of the warranty.
10. Operating and maintenance cautions and instructions.
11. Recommended spare parts list.

1.08 REFERENCES:

A. Codes and Standards:
1. Electrical Standards: Provide electrical products which have been tested, listed and labeled by UL and comply with NEMA standards.
2. NEMA Compliance: Comply with NEMA standards pertaining to components and devices for electric control systems.
3. NFPA Compliance: Comply with NFPA 90A "Standard for the Installation of Air Conditioning and Ventilating Systems" where applicable to controls and control sequences.
4. Comply with NEPA 70, "National Electric Code" for all electrical installation.

1.09 DELIVERY, STORAGE, AND HANDLING:

A. Provide factory shipping cartons for each piece of equipment, and control device. Maintain cartons through shipping, storage and handling as required to prevent equipment damage, and to eliminate dirt and moisture from equipment. Store equipment and materials inside and protected from weather.

1.10 INSTRUCTION OF OWNER'S PERSONNEL: (SEE SECTION 230000)

A. Purpose is to provide a transition of the systems from the Contractor to the Owner, leaving the Owner's personnel familiar with and well qualified to operate and maintain the systems.

B. Instruction to cover purpose and function of each system and its components, to show proper operating technique, to show proper maintenance technique.

C. Prepare an outline of information to be conveyed, list materials available for reference. Submit to Architect along with a proposed schedule of instruction. Schedule to allow individual time for each trade and each system.

D. Convey information in formal classroom session. Teachers to include qualified contractor personnel and sales representatives for each major piece of equipment. Go from the classroom to the actual location to graphically illustrate concepts discussed.

1.11 WARRANTIES:

A. As part of the overall project warranty, furnish individual manufacturer warranties for each piece of equipment for a period of not less than one year from date of Owner's beneficial use (substantial completion).

B. Warrant the overall assembly of equipment, materials and labor comprising these systems.

1.12 CLEANING AND LUBRICATION:

A. All instruments, control panel and control piping shall be thoroughly cleaned before final acceptance. Provide lubrication for all furnished equipment.

1.13 TESTING AND ADJUSTING OF SYSTEM:

A. During the system commissioning, testing and balancing of the various building systems, have a controls representative(s) present and available to interpret and adjust controls as needed. Demonstrate and report the integrity and accuracy of each function and control point.

B. At the termination of the testing period, the Controls representative shall spend one working day instructing the Owner's operating personnel in the control system operation, and one working day checking each system for day-night and manual override with the Owner's

operating personnel on each air system. A complete operating booklet shall be provided and used during the training period. Schedule this training with the Owner and Mechanical Contractor.

1. Since system performance is partly a function of climatic conditions, the Controls contractor shall be available during the changing seasons of the warranty period to make further adjustments and modifications if required. A final complete check of all systems shall be made at the conclusion of the one-year warranty period.

PART II - PRODUCTS

2.01 CONTROL CABINETS: FURNISH STAMPED STEEL WITH HINGED DOOR AND LOCKING LATCH CONTROL CABINETS TO PROTECT AND CONCEAL ALL CONTROL DEVICES. ARRANGE COMPONENTS NEATLY TO PROVIDE ADEQUATE MAINTENANCE OPPORTUNITY AND PROPER DEVICE FUNCTION. LABEL ALL COMPONENTS, NUMERICALLY CODE ALL PIPING AND WIRING. TERMINATE ALL WIRING AT TERMINAL BLOCKS. PROVIDE ENGRAVED PLASTIC LABELS FOR ALL PANEL FACE DEVICES. PROVIDE ALL PANEL WIRING IDENTIFICATION IN COMPLIANCE WITH UINTA BASIN TECHNICAL COLLEGE STANDARDS.

A. Furnish stamped steel with hinged door and locking latch control cabinets to protect and conceal all control devices. Arrange components neatly to provide adequate maintenance opportunity and proper device function. Label all components, numerically code all piping and wiring. Terminate all wiring at terminal blocks. Provide engraved plastic labels for all panel face devices. Provide all panel wiring identification in compliance with Uinta Basin Technical College Standards.

1. Provide with surge suppressor - one per panel.
2. Provide with 120/60/1 outlet - one per panel.
3. Provide with fuse - quantity as required.
4. Provide with transformer, 120/24 VAC, quantity as required.
5. Provide RS-232 service trunk from main panel into each ATC panel for "Laptop" computer access.

2.02 CONTROL DAMPERS:

a. See specification section 233300
b. Electric Damper Actuators: Reference Section 230933 for 120 volt damper actuators and Section 230923 for 24 volt damper actuators.

PART III - CONTROL SEQUENCES

3.01 GENERAL:

A. Provide control systems to manage and manipulate mechanical equipment in a functional and energy conserving way.

B. Provide control panels in the central fan rooms with terminal block connections for interface of fans, etc.

C. Install control communication wiring per the National Electric Code. Reference Section 230923 for additional detail.

D. Set up separate control loops for each major fan system with options to favor one system over another, or to have each system independent if the building area is physically isolated from other buildings on campus.

3.02 CENTRAL CONTROL AND MONITORING SYSTEM:

A. Central Control Units shall provide for overall control and monitoring of the Building System.

B. DDC panels shall also provide programmable time clock functions, optimum start, and signals to ATC panels and report space temperature and condition of air handling systems and other mechanical systems.

C. Locate DDC panels in mechanical rooms and in rooms as shown on the drawings or as directed in the field.

D. Provide a run time accumulator function on all pieces of HVAC equipment 5 HP and above.

3.03 CAMPUS INTERFACE:

A. System controllers shall be integrated into the existing Schneider Electric StruxureWare/EcoStruxure supervisory software.
   1. Provide integration of all controllers and equipment interfaces with unique and individualized graphical interfaces with system reporting including:
      a. Reported Values
      b. Alarms
      c. Trending
      d. Setpoint Adjustment

B. Connect to building Ethernet/IP network. Coordinate with Campus IT department for networking details and device integration. Reference Section 230923 for additional detail.

3.04 ROOFTOP COOLING UNIT (RTU-1)

A. FACTORY CONTROLLER: Controller shall be provided with required sensors and programming for rooftop unit. Controller shall be factory programmed, mounted and tested. Controller shall have a LCD readout for changing set points and monitoring unit operation.

B. UNIT START COMMAND:
   1. Factory mounted and wired outdoor air and recirculated air damper actuators are powered.
   2. Return/Exhaust air damper actuator is powered.
   3. Exhaust fan starts after a (adj.) delay.
   4. Supply fan starts after a (adj.) delay.
   5. Tempering options to function as described below.

C. UNIT STOP COMMAND (OR DE-ENERGIZED)
   1. Supply fan, exhaust fan and tempering options de-energized.
   2. Outdoor air damper actuator is spring return close, and the recirculated air damper actuator is spring open.
   3. Return air damper is spring return close

D. OCCUPIED/UNOCCUPIED MODES: Shall be based on a 7-day time clock internal to the controller. The schedule shall be set by the end user. When a user initiates an override input, the controller will switch from unoccupied to occupied mode. The controller will return to the scheduled occupied/unoccupied mode after the override time has expired. If internal time clock is disabled, a remote contact or a BMS can control the occupied/unoccupied mode.
   1. Occupied Mode:
      a. Damper control per below.
      b. Exhaust fan ON.
      c. Supply fan ON.
      d. Heating per below.
      e. Cooling per below.
   2. Unoccupied Mode (Unit Off): Unit remains off when in unoccupied mode.
      a. Supply fan OFF
      b. Exhaust fan OFF
      c. Tempering OFF
      d. Outdoor air damper closed.
      e. Return damper closed.
      f. Recirculation damper open.

E. MORNING WARMUP/COOL DOWN: Prior to occupancy, the unit will run using the warmup or cool down sequence until the occupied set point is achieved. The heating or cooling mode must not be locked out and the space temperature is below or above set point by the unoccupied hysteresis (adj.) (This Sequence must be field configured.)

F. SUPPLY BLOWER SEQUENCE: The supply blower is provided with a factory mounted variable frequency drive. The supply blower speed will be controlled with the following sequence:
   1. Duct Static Pressure Sensor: The supply blower is modulated based upon the signal from a duct static pressure sensor (factory provided and wired, field mounted and tubing by others). The controller will modulate the supply fan based upon a comparison of the duct static pressure set point (adj.) to the actual duct static pressure level reported from the sensor. Provide high duct static safety shutoff to protect the system and equipment from over-pressurization.

G. OUTDOOR AIR AND RE-CIRCULATED (RECIRC) AIR DAMPER CONTROL: The outdoor and recirculated air dampers are factory mounted and wired. Outside air damper and recirculation damper will be inverse positions of each other. Example, when the outside air damper is set to 35% opening, the recirculation damper will be at 65% opening. The modulating actuator will be controlled to dictate position by the following sequence:
   1. Constant Position-Adj. Setpoint: The outdoor air damper will be set to a constant minimum position (adj.) and upon a field provided contact closure the outdoor air damper will open up to the maximum position (adj.). Both positions will be set by the controller.

H. EXHAUST BLOWER SEQUENCE: The exhaust blower will modulate during operation:
   1. Space Static Pressure by Factory: The exhaust blower is modulated based upon the signal from a building pressure sensor. The controller will modulate the exhaust fan based upon a comparison of the building static pressure set point (adj.) and the building static pressure level reported from the sensor.

I. COOLING SEQUENCE: The cooling is controlled to maintain the supply temperature set point. The mechanical cooling will be locked out when the outside air is < 55 F (adj.):
   1. Packaged DX Cooling (Inverter Scroll): The controller will provide a modulating signal for cooling. From 0-100%, the inverter scroll will be controlled to maintain discharge temperature. The electronic expansion valve will modulate to maintain 8 of superheat.
   2. Modulating Hot Gas Reheat Sequence: During dehumidification the modulating HGRH is controlled to maintain the supply temperature set point.
   3. Modulating Head Pressure Control: Lead condenser fan will have an EC motor and will modulate to maintain a head pressure set point.

J. REHEAT SEQUENCE: While the unit is in dehumidification mode the outdoor air will be reheated via Modulating Hot Gas Reheat for space neutral applications:
   1. Modulating Hot Gas Reheat: The controller will modulate the hot gas reheat reheat valve with a 0-10 V signal to maintain the supply temperature set point (adj.).

K. HEATING SEQUENCE: The heating is controlled to maintain the supply temperature set point. The heating will be locked out when the outside air is > 80 F (adj.):
   1. Indirect Gas Furnace: The controller will modulate the indirect gas furnace to maintain the supply temperature set point (adj.).

L. TEMPERATURE CONTROL SEQUENCE: The unit will maintain the supply air discharge setpoint per the following. Adjustable locally or by BMS.
   1. Supply Discharge Temperature Control: The supply setpoint will be a constant temperature setpoint from the controller (adj.). Adjustable locally or by BMS.

M. BUILDING FREEZE PROTECTION: If the supply air temperature drops below 35 F (adj.) for 300s (adj.), the controller will de-energize the unit and activate the alarm output.

N. UNIT LEAK DETECTION AND MITIGATION: The unit will be equipped with refrigerant leak detection sensors. These sensors along with the following sequence of operation are required per UL60335-2-40.
   1. Refrigerant Leak Detected In Air Tunnel: If a refrigerant leak is detected in the air tunnel, the supply fan will operate at minimum airflow requirement, recirculation damper to be fully open, outside air damper will be closed, powered exhaust fan will operate based configured sequence, and compressors are disabled to reduce leakage rate. This

operation is required in order to move stagnant refrigerant from within the unit, duct, and space ensuring proper dilution of the refrigerant. This operation is required even if the unit is called to be off. After leak detection is cleared, the unit will go back to normal operation. Exception to this operation is when the unit is receiving an active fire alarm signal at the unit controller. If unit controller is receiving a fire alarm input, the unit will not operate the leak mitigation supply fan sequence.

2. Dry alarm contacts available to allow the building to perform external mitigation actions when necessary. These by other external actions include opening of zone dampers in the ductwork, disabling duct mounted electric resistance heaters, and/or enabling additional mechanical ventilation as required per ASHRAE 15.
3. Refrigerant Leak Detected In Compressor Compartment: If a refrigerant leak is detected in the compressor compartment and the unit is configured with an indirect gas furnace, the furnace will be disabled while leak detection is active. After leak detection is cleared, the unit will go back to normal operation.

O. ECONOMIZER SEQUENCE: When the application requires cooling, and the outdoor air conditions are suitable for free cooling, the controller will modulate the outdoor air and recirculated air dampers to maintain the discharge temperature set point. If the outdoor air damper modulates to the maximum economizer set point and the discharge temperature is not met, the controller will increase the call for cooling to meet the discharge temperature and could engage mechanical cooling.
   1. Temp./Enthalpy: The economizer will be locked out when: the outdoor air 75 F DB (adj.) or > 55 F dew point (adj.); the unit is operating in dehumidification mode; or there is a call for heating

P. ALARMS INDICATION: The controller will display alarms and have one digital output for remote indication of an alarm condition. Possible alarms include:
   1. Building Management System: The controller will send all alarms to the BMS.
   2. Dirty Filter Alarm: A digital signal is sent to the controller indicating an increased pressure drop across the supply air filter (Must be adjusted in field during start up). The controller will then provide a dirty filter alarm.
   3. Supply and Exhaust Air Alarm: The controller monitors the proving switch on each blower and sends an alarm in the case of either blower proving switch not engaging.
   4. DX Alarm: The controller monitors the refrigerant pressure. In the case of low refrigerant pressure the compressors will shut down until refrigerant pressure returns to normal values and the controller will send an alarm. In the case of high refrigerant pressure the compressors will shut down, requiring a manual reset and the controller will send a alarm.
   5. Temperature Sensor Alarm: The controller sends an alarm in the case of a failed air temperature sensor.
   6. Pressure Sensor Alarm: The controller sends an alarm in the case of a failed pressure sensor.
   7. Humidity Sensor Alarm: The controller sends an alarm in the case of a failed humidity sensor.

Q. ACCESSORIES: The following accessories will be included with the unit to expand the functionality or usability of the controller.
   1. BMS Interfacing: A BMS port or serial card is provided with the controller for field interfacing with a building management system. Each card is sent out with the default parameters, and the controls contractor must change the appropriate addresses to match the BMS settings.
   2. Phase and Brownout Protection: Factory mounted and wired component which monitors the main power coming into the unit. If a phase drops out, or if the incoming voltage exceeds the acceptable range, the component will turn off the unit to help protect the electrical systems.
   3. Airflow Monitoring: The outdoor airflow monitoring device is installed as a stand alone option in the control center. It includes a heated thermistor that is used to measure feet per minute in the housing. This feet per minute is converted to CFM in the factory supplied

airflow readout device.

4. Condensate Overflow Unit Shutdown: Factory mounted condensate overflow switch wired to the unit controller. The controller monitors the condensate overflow switch. If the water level in the drain pan reaches a certain level, the unit will shutdown and send an alarm.
5. Damper End Switch: Damper end switched will be provided to ensure the supply and exhaust fans do not enable until the dampers are proven open.

3.05 VAV TERMINAL BOX CONTROL

A. The system shall be programmed to be in compliance with and follow the sequence requirements stipulated in ASHRAE 36-2018, (High- Performance Sequence of Operation for HVAC Systems).

B. When the zone state is cooling, the cooling-loop output shall be mapped to the airflow set point from the cooling minimum to the cooling maximum airflow set points. Heating element is disabled unless the DAT is below the mini- mum set point. (In occupied mode, the heating element shall be modulated to maintain a DAT no lower than 50°F).
   1. If supply air temperature from the air handler is greater than room temperature, cooling supply airflow set point shall be no higher than the minimum.

C. When the zone state is dead band, the active airflow set point shall be the minimum airflow set point. Heating element is disabled unless the DAT is below the minimum set point (In occupied mode, the heating element shall be modulated to maintain a DAT no lower than 50°F).

D. When the zone state is heating, the heating loop shall maintain space temperature at the heating set point as follows:
   1. From 0% to 50%, the heating-loop output shall reset the discharge temperature set point from the current AHU SAT set point to a maximum of Max delta T above space temperature set point. The airflow set point shall be the heating minimum.
   2. From 51% to 100%, if the DAT is greater than room temperature plus 5°F, the heating-loop output shall reset the airflow set point from the heating minimum airflow set point to the heating maximum airflow set point.
   3. The heating element shall be modulated to maintain the discharge temperature at set point. (Directly controlling heating off the zone temperature control loop is not acceptable).

E. In occupied mode, the heating element shall be modulated to maintain a DAT no lower than 50°F.

F. Alarms
   1. Low Airflow
      a. If the measured airflow is less than 70% of set point for 5 minutes while set point is greater than zero, generate an alarm.
      b. If the measured airflow is less than 50% of set point for 5 minutes while set point is greater than zero, generate an alarm.
      c. If a zone has an Importance-Multiplier of 0 for its static pressure reset Trim and Response control loop, low airflow alarms shall be suppressed for that zone.
   2. Low-Discharge Air Temperature
      a. If the heating electric source is proven ON, and the DAT is 15°F less than set point for 10 minutes, generate an alarm.
      b. If the heating electric source is proven ON, and the DAT is 30°F less than set point for 10 minutes, generate an alarm.
      c. If a zone has an Importance-Multiplier of 0 for its electric reset Trim and Response control loop, low-DAT alarms shall be suppressed for that zone.
   3. Airflow Sensor Calibration
      a. If the fan serving the zone has been OFF for 10 minutes, and airflow sensor reading is above 10% of the cooling maximum airflow set point, generate an alarm.
   4. Leaking Damper
      a. If the damper position is 0%, and airflow sensor reading is above 10% of the cooling maximum airflow set point for 10 minutes while the fan serving the zone is proven

ON, generate an alarm.

G. Testing/Commissioning Overrides. Provide software switches that interlock to a system level point to
   1. Force zone airflow set point to zero,
   2. Force zone airflow set point to Vcool-max,
   3. Force zone airflow set point to Vmin,
   4. Force zone airflow set point to Vheat-max,
   5. Force damper full closed/open,
   6. Force heating to OFF/closed, and
   7. Reset request-hours accumulator point to zero (provide one point for each reset type listed in the next section).

H. System Requests
   1. Cooling SAT Reset Requests
      a. If the zone temperature exceeds the zone's cooling set point by 5°F for 2 minutes and after suppression period due to set point change, send 3 requests.
      b. Else if the zone temperature exceeds the zone's cooling set point by 3°F for 2 minutes and after suppression period due to set point change, send 2 requests.
      c. Else if the cooling loop is greater than 95%, send 1 request until the cooling loop is less than 85%.
      d. Else if the cooling loop is less than 95%, send 0 requests.
   2. Static Pressure Reset Requests
      a. If the measured airflow is less than 50% of set point while set point is greater than zero and the damper position is greater than 95% for 1 minute, send 3 requests.
      b. Else if the measured airflow is less than 70% of set point while set point is greater than zero and the damper position is greater than 95% for 1 minute, send 2 requests.
      c. Else if the damper position is greater than 95%, send 1 request until the damper position is less than 85%.
      d. Else if the damper position is less than 95%, send 0 requests.
   3. Electric Heating Reset Requests
      a. If the DAT is 30°F less than set point for 5 minutes, send 3 requests.
      b. Else if the DAT is 15°F less than set point for 5 minutes, send 2 requests.
      c. Else if Heating element position is greater than 95%, send 1 request until the Heating element position is less than 85%.
      d. Else if the Heating element position is less than 95%, send 0 requests.

I. Active maximum and minimum set points shall vary depending on the mode of the zone group the zone is a part of per the following:

Set Point	Occupied	Cooldown	Setup	Warm-Up	Setback	Unoccupied
Cooling maximum	Vcool-max	Vcool-max	Vcoo-max	0	0	0
Cooling minimum	Vmin	0	0	0	0	0
Minimum	Vmin	0	0	0	0	0
Heating minimum	Max (Vheat-min, Vmin)	Vheat-min	0	Vheat-max	Vheat-max	0
Heating Maximum	Max (Vheat-max, Vmin)	Vheat-max	0	Vcool-max	Vcool-max	0

J. Set Points

1. Occupied heating/cooling set point 72 degrees Fahrenheit (22.22 degrees Celsius) with a maximum of +/- 2 degrees Fahrenheit (-16.67 degrees Celsius) local reset adjustment (where applicable).
2. Unoccupied cooling set point 78 degrees Fahrenheit (25.56 degrees Celsius). (adjustable 76.0 to 80.0).

K. Occupancy Sensors. For zones that have an occupancy sensor switch:
1. When the switch indicates that the space has been unpopulated for 5 minutes continuously during the occupied mode, the active heating set point shall be decreased by 5 degrees Fahrenheit (-15 degrees Celsius). and the cooling set point shall be increased by 5 deg F. The minimum ventilation airflow will be set to zero.
2. When the switch indicates that the space has been populated for 1 minute continuously, the active heating and cooling set points and airflows shall be restored to their previous values.

L. VAV Box System graphic Shall display the following static and dynamic information:
1. VAV Box System Graphic.
   a. VAV Box Control Sequence Graphic.
   b. Room/area served.
   c. Room occupied/unoccupied state.
   d. Room temperature.
   e. Local reset temperature set point (where applicable).
   f. Room temperature set point, occupied.
   g. Room temperature set point, unoccupied.
   h. Effective calculated set point.
   i. VAV box discharge air temperature.
   j. Maximum cooling flow set point.
   k. Minimum cooling flow set point.
   l. Minimum Heating flow set point.
   m. Maximum heating flow set point.
   n. Current air flow set point.
   o. Current flow value.
   p. VAV Box damper position as percent open.
   q. Electric heating element demand.
   r. Floor Plan (by floor) that shows space temperature and effective set point.
2. VAV Summary Graphic:
   a. Provide a single graphic that shows all VAV boxes and their respective points in a matrix format. Operator is capable of-adjusting all set points overriding commanded positions for valve and damper actuator accessing each VAV box system graphic access the respective AHU system graphic

3.06 ROOTOP EXHAUST FAN (REF-5 & MD-5)

A. Damper Control
1. Damper opens when fan is running
2. Damper closes when fan is off

B. Provide an adjustable occupied/unoccupied time schedule.
1. Fan is enabled:
   a. When time schedule is occupied
   b. RTU-1 is enabled.
2. Fan is disabled
   a. When time schedule is unoccupied
   b. RTU-1 is disabled

C. Speed control
1. Fan is constant volume. Adjustable speed pot is set during balancing

D. Alarms
   1. Command Fail Alarm: command vs status mismatch

3.07 MAKEUP AIR UNITS (MAU-1 & 2):

A. Unit Controls
   1. The unit shall be provided from the factory with:
      a. 24VAC Transformer
      b. Terminal Strip
      c. Supply Fan VFD
      d. Factory mounted and wired outdoor air and recirculated air dampers and actuator

B. Microprocessor Controller
   1. The microprocessor control shall be factory programmed, mounted, wired and tested. Controller shall have a lighted LCD display and keypad for changing set points and monitoring unit operation. The controller shall be equipped with the following sensors:
      a. Outdoor air temperature sensor
      b. Supply discharge temperature sensor (must be field mounted in the supply ductwork)
      c. Room temperature sensor (shipped loose for field mounting and wiring)
      d. Building pressure transducer (shipped loose for field mounting and wiring)

C. Building Management System (BMS) Communication
   1. The microprocessor controller shall be capable of integrating into a Building Management System (BMS) to allow the BMS to remotely adjust set points, view unit status points and alarms. The microprocessor shall include the ability to communicate over the following protocol:
      a. BACnet® IP/Ethernet

D. Unit Start Command
   1. A contact closure or jumper wire must be field wired between terminals R and G to enable the unit. When terminal G is energized the unit shall operate as described below. When terminal G is de-energized the unit is disabled.

E. Internal Time Clock (Schedule)
   1. The microprocessor controller is equipped with an internal 7-day programmable time clock, allowing the user to add up to seven different occupancy schedules.

F. Occupied/Unoccupied Modes
   1. The microprocessor controller offers the following modes for determining occupancy:
      a. The internal time clock
      b. The Building Management System (BMS)
   2. The unit can be temporarily overridden to the occupied mode via a dry contact or the keypad display. After the override time has expired (1 hr, adj) the unit will return to the scheduled occupied/unoccupied mode.

G. Occupied Mode Unit Start-Up Sequence
   1. Unit enable input must be closed (contact closure between R and G).
   2. Initial delay, microprocessor controller initialization sequence.
   3. Factory mounted and wired outdoor air and recirculated air damper actuator is powered.
   4. Supply fan starts after adj. delay.
   5. Tempering operation begins (see modes below).

H. Supply Fan Sequence (Occupied)
   1. The unit has been provided with a factory mounted variable frequency drive (VFD). The variable frequency drive shall control the supply fan speed as indicated by the following sequence:
      a. Constant Volume:
         1) The VFD shall be programmed from the factory for a constant supply fan speed. This is to be adjusted for air balancing only and is not to be modulated.

I. Outdoor Air Damper And Recirculated Air Damper Control (Occupied)
   1. The outdoor air and recirculated air dampers are controlled by a single common modulating actuator and the recirculated air damper will operate inverse of the outdoor air damper. When de-energized the actuator will spring return, closing the outdoor air damper and opening the recirculated air damper. The position of the dampers shall be controlled by the following sequence:

J. Building Static Pressure Control
   1. The microprocessor controller will modulate the dampers between the minimum and maximum outdoor air positions based upon a comparison of the building static pressure set point and the actual building static pressure level reported from the sensor. The minimum and maximum outdoor air damper position must be set locally at the controller. The building pressure set point can be adjusted:
      a. Locally at the controller.
      b. Remotely by the BMS.

K. Heating Control
   1. The heating will be locked out when the outside air is above the heating lockout set point (65 F adj.). When enabled heating will be controlled as follows:
      a. Indirect Gas Fired Heating
         1) The microprocessor controller will modulate the indirect gas furnace to maintain the active supply temperature set point.

L. Cooling Control
   1. The cooling will be locked out when the outside air is below the cooling lockout set point (80 F adj.). When enabled cooling will be controlled as follows
      a. Evaporative Cooling
         1) The microprocessor controller will enable the evaporative cooler pump whenever the outside air temperature is above the outdoor air set point (80 F adj.). Additionally the microprocessor shall control the factory provided, field installed supply, drain, and supply line drain valves. When the evaporative cooler is enabled the sump shall be filled with water for 90 seconds (adj.) prior to enabling the pump. When disabled the sump shall be drained. The sump is also drained and pump disabled for 10 minutes once every 24 hours of pump runtime to minimize mineral buildup.

M. Supply Temperature Set Point Control (Occupied)
   1. The active supply temperature set point shall be reset by the controller between the minimum (adj.) and maximum (adj.) reset limits to maintain a room temperature set point. The room temperature sensor is shipped loose for field mounting and wiring. The room temperature set point can be adjusted:
      a. Locally at the controller.
      b. Remotely by the BMS.

N. Unoccupied Mode (Disabled)
      a. Supply Fan Is OFF
      b. Factory mounted and wired outdoor air and recirculated air damper actuator is de-energized.

O. Supply Air Low Limit
   1. If the supply air temperature drops below 35 F (adj.) for 300 seconds (adj.), the controller will de-energize the unit and generate an alarm.

P. Alarm Management
   1. The microprocessor controller will monitor the unit status for alarm conditions. Upon detecting an alarm, the controller will record the alarm description, time, date, available temperatures, and unit status for user review. A digital output is reserved for remote alarm indication.
   2. Alarms are also communicated to the Building Management System (BMS).

3. Alarms Include:
    a. Global Alarm
        1) Indication that one or more alarms are present.
    b. Outdoor Air Inlet Temperature Sensor Alarm
        1) Outdoor Air Inlet Temperature Sensor Alarm: Failure of the outdoor air inlet temperature sensor.
    c. Supply Air Discharge Temperature Sensor Alarm
        1) Failure of the supply air discharge temperature sensor. Unit is shut down.
    d. Room Temperature Sensor Alarm
        1) Failure of the room temperature sensor failure.
    e. Supply Air Low Limit Alarm
        1) Supply air has fallen below 35 F (adj.) for 300 seconds (adj.). Unit is shut down.
    f. Dirty Filter Alarm
        1) Indicates the pressure across the filters has increased above the dirty filter pressure switch setting (field adjustable)
    g. Indirect Gas Furnace Alarms
        1) The indirect gas furnace operation is monitored for a variety of alarm conditions.
    h. Supply Fan Alarm
        1) Indicates the supply fan failed to prove for a 30 second (adj.) period.
    i. Building Pressure Sensor Alarm
        1) Failure of the building pressure sensor.

3.08 ROOTOP EXHAUST FAN (REF-1 & 4 & MD-1 & 4)

A. Damper Control
    1. Damper opens when fan is running
    2. Damper closes when fan is off

B. Provide an adjustable occupied/unoccupied time schedule.
    1. Fan is enabled:
        a. When time schedule is occupied
        b. Associated MAU is enabled.
    2. Fan is disabled
        a. When time schedule is unoccupied
        b. Associated MAU is disabled
    3. MAU-1 interlocked with REF-1
    4. MAU-2 interlocked with REF-4

C. Speed control
    1. Fan is constant volume. Adjustable speed pot is set during balancing.

D. Alarms
    1. Command Fail Alarm: command vs status mismatch

3.09 EVAPORATIVE COOLERS (EC-1 & 2, MD-7 & 8):

A. Damper Control
    1. Damper opens when fan is running
    2. Damper closes when fan is off

B. Evaporative coolers are staged-on, fan and pump, to maintain space temperature set point.
    1. Stage 1 (One Evaporative cooler running) is enabled when:
        a. Outside air temperature is above 85 deg. F (adj.)
        b. Space temperature is above setpoint (adj)
    2. Stage 2 (Two Evaporative coolers running) is enabled when:
        a. Space temperature set point has not been reached after 15 minutes (adj.) of stage one cooling.
    3. Stage 2 is disabled when:

a. Space temperature has been satisfied for 15 minutes (adj.)

C. Two space temperature sensors are averaged for setpoint feedback.

D. Leader and follower evaporative coolers are rotated to maintain equal runtimes.

E. Evaporative cooler fill and drain valves are manually operated.

F. Alarms
1. Command Fail Alarm: command vs status mismatch

3.10 ROOTOP EXHAUST FAN (REF-2 & 3 & MD-2 & 3)

A. Damper Control
1. Damper opens when fan is running
2. Damper closes when fan is off

B. Provide an adjustable occupied/unoccupied time schedule.
1. Fan is enabled:
a. When time schedule is occupied
b. Associated EC is enabled.
2. Fan is disabled
a. When time schedule is unoccupied
b. Associated EC is disabled
3. EC-1 interlocked with REF-2
4. EC-2 interlocked with REF-3

C. Speed control
1. Fan is constant volume. HOA speed controller is set during balancing to match EC unit airflow.

D. Alarms
1. Command Fail Alarm: command vs status mismatch

3.11 ROOTOP EXHAUST FAN (REF-5 MD-5)

A. Damper Control
1. Damper opens when fan is running
2. Damper closes when fan is off

B. Provide an adjustable occupied/unoccupied time schedule.
1. Fan is enabled:
a. When time schedule is occupied
b. Associated MAU is enabled.
2. Fan is disabled
a. When time schedule is unoccupied
b. Associated MAU is disabled
3. MAU-1 interlocked with REF-5

C. Speed control
1. Fan is constant volume. Adjustable speed pot is set during balancing.

D. Alarms
1. Command Fail Alarm: command vs status mismatch

3.12 INLINE TRANSFER FAN (ITF-1 & IDH-1)

A. Provide an adjustable occupied/unoccupied time schedule.
1. Fan is enabled:
a. When time schedule is occupied
b. Associated MAU is enabled.
2. Fan is disabled
a. When time schedule is unoccupied
b. Associated MAU is disabled

3. MAU-1 interlocked with ITF-5

B. Speed control
   1. Fan is constant volume. Adjustable speed pot is set during balancing.

C. Space Temperature Control
   1. Duct heater is modulated to maintain space temperature setpoint: 65 deg. F (adj.)

D. Alarms
   1. Command Fail Alarm: command vs status mismatch
   2. Low space temperature alarm: below 40 deg. F (adj.)

3.13 DOMESTIC HOT WATER CONTROL SEQUENCE:

A. Domestic Hot Water Heater.
   1. The domestic water heater operate through its own controls to provide heating for the domestic hot water system.

B. Domestic Hot Water Re-circulating Pump:
   1. Is enabled when flow is sensed by an aquastat. Pump to run a minimum of 10 minutes after flow is sensed.

3.14 SPLIT SYSTEM AIR CONDITIONING UNIT:

A. The split air conditioning unit operates through its own controller to start the indoor unit evaporator fan and cycle on the outdoor condensing unit in order to satisfy the IT Room cooling space set point temperature. The DDC system monitors the units alarm status and space temperature.

3.15 GAS FIRED UNIT HEATER:

A. The gas fired unit heater operates through its own controls to provide heating to the local space when the local wall mounted thermostat calls for heating.

3.16 SHOP COMPRESSOR:

A. The DDC system monitors shop air pressure and sends an alarm when the shop air pressure is low.

END OF SECTION 230900

This page intentionally left blank

SECTION 230923
DIRECT DIGITAL CONTROL SYSTEMS (DDC)

PART I - GENERAL:

1.01 RELATED DOCUMENTS: SEE SECTION 230900.

1.02 DESCRIPTION OF WORK:

A. The scope of work shall include all labor, material, and equipment necessary to complete the temperature control work for the entire project.
   1. A Schneider Electric Struxureware shall be the base bid for this project with the price shown under the base bid column on the mechanical bid breakdown form. The entire system to be complete for all buildings required control functions, price to comprise a complete control price for the work required.
   2. The Contractor under this heading shall furnish and install all DDC components required as specified for all items indicated on the drawings and described hereinafter including sensors, switches, relays, thermostats, control panels for instruments, headend monitoring, etc.
   3. Local Application Specific Controllers (ASC) and Network Control Units (NCU) as required.
   4. Adjustment and validation of the control systems. Instruction of Owner's representative on maintenance and operation of control equipment.
   5. Composite electric diagrams showing interlocks between equipment furnished under this and other sections.
   6. Remote Monitoring and Control Communications capability through direct communication to the Central Operators Workstation.
   7. This system shall include but not be limited to controls and equipment as hereinafter specified.
      a. Air Handling Systems
      b. Evaporative Coolers
      c. Local Areas Static Pressure Control
      d. Exhaust Fan Control
      e. Miscellaneous - Ventilation Systems
      f. Other Systems

DEFINITIONS

A. DDC: Direct digital control.

B. I/O: Input/output.

C. LonWorks: A control network technology platform for designing and implementing interoperable control devices and networks.

D. MS/TP: Master slave/token passing. PC: Personal computer.

E. PC: Personal computer.

F. PID: Proportional plus integral plus derivative.

G. RTD: Resistance temperature detector.

2.02 QUALITY ASSURANCE: SEE SECTION 230900.

A. This specification wording is based on Wasatch Controls, Honeywell N4 System product line.

SYSTEM PREFORMANCE

A. Comply with the following requirements:
   1. Graphic Display: Display graphic with minimum 20 dynamic points with current data within 10 seconds.
   2. Graphic Refresh: Update graphic with minimum 20 dynamic points with current data within 8 seconds.

3. Object Command: Reaction of time of less than two seconds between operator command of a binary object and device reactions.
4. Object Scan: Transmit change of state and change of analog values to control units or workstation within six seconds.
5. Alarm Response Time: Annunciate alarm at workstation within 45 seconds. Multiple workstations must receive alarms within five seconds of each other.
6. Program Execution Frequency: Run capability of applications as often as five seconds, but selected consistent with mechanical process under control.
7. Performance: Programmable controllers shall execute DDC PID control loops, and scan and update process values and outputs at least once per second.
8. Reporting Accuracy and Stability of Control: Report values and maintain measured variables within tolerances as follows:
    a. Water Temperature: Plus or minus 1 degrees Fahrenheit (-17.22 degrees Celsius).
    b. Water Flow: Plus or minus 5 percent of full scale.
    c. Water Pressure: Plus or minus 2 percent of full scale.
    d. Space Temperature: Plus or minus 1 degrees Fahrenheit (-17.22 degrees Celsius).
    e. Ducted Air Temperature: Plus or minus 1 degrees Fahrenheit (-17.22 degrees Celsius).
    f. Outside Air Temperature: Plus or minus 2 degrees Fahrenheit (-16.67 degrees Celsius).
    g. Dew Point Temperature: Plus or minus 3 degrees Fahrenheit (-16.11 degrees Celsius).
    h. Temperature Differential: Plus or minus 0.25 degrees Fahrenheit (-17.64 degrees Celsius).
    i. Relative Humidity: Plus or minus 5 percent.
    j. Airflow (Pressurized Spaces): Plus or minus 3 percent of full scale.
    k. Airflow (Measuring Stations): Plus or minus 5 percent of full scale.
    l. Airflow (Terminal): Plus or minus 10 percent of full scale.
    m. Air Pressure (Space): Plus or minus 0.01-inch wg.
    n. Air Pressure (Ducts): Plus or minus 0.1-inch wg.
    o. Carbon Monoxide: Plus or minus 5 percent of reading.
    p. Carbon Dioxide: Plus or minus 50 ppm.
    q. Electrical: Plus or minus 5 percent of reading

3.02 SUBMITTALS: SEE SECTION 230900.

3.03 DELIVERY, STORAGE AND HANDLING: SEE SECTION 230900.

3.04 INSTRUCTION OF OWNER'S PERSONNEL: SEE SECTION 230900.

3.05 WARRANTIES: SEE SECTION 230900.

3.06 CLEANING AND LUBRICATION: SEE SECTION 230900.

3.07 TESTING AND ADJUSTING OF SYSTEM: SEE SECTION 230900.

PART II - PRODUCTS

4.01 CONTROL CABINETS: SEE SECTION 230900.

A. Panel mount all controllers and devices other than remote sensors and operators. Provide permanent labels, terminal blocks, etc.

4.02 CONTROL SOURCES:

A. POWER SUPPLY:
    1. Furnish complete power supply for all application controllers at appropriate voltage and in adequate capacity. Provide multiple power supply devices, mount conveniently in Mechanical Room or spaces as directed. Load power supply units to no more than 80 percent of nameplate capacity.

2. Run all power wiring in conduit, neatly arranged and coordinated with other trades. Plenum rated cable may be used above fully accessible ceilings only. Securely anchor and note in organized fashion.

B. COMMUNICATIONS CONDUCTORS:
1. Connect new DDC Controllers back to the Central Microprocessor with required conductors in shielded cable. (Beldon #18 gauge "Beldfoil 8760 or equivalent). Avoid common conduit with AC voltage or inductive loads. All in accordance with National Electric Code, conductors either plenum rated cable or installed in conduit (3/4" minimum). The LAN Network shall be twisted pair or coax.
2. Provide central communications panel and fiber optic hub.
3. Communications from hub back to Physical Plant shall be by Owner.

C. CONTROL WIRING:
1. In concealed locations above lay-in ceilings low voltage conductor may be installed without conduit. Low voltage conductor shall be UL listed Article 725 Plenum Cable. Install the cable parallel to building walls.
2. In all other building areas, i.e. Lab area, all control wiring shall be installed in conduit per National Electric Code. Installation shall be square with the walls of the buildings.
3. Number and code all wiring.

4.03 DAMPERS: SEE SECTION 230900.

4.04 ELECTRIC DEVICES: SEE SECTION 230933.

A. OVERVIEW: The Direct Digital Control (DDC) System shall be LAN Networked Based with local microprocessor-based control panel networked together.
1. It is the intent of these specifications to create a combined direct digital control. All "system" type control functions, such as those used for fan systems, building pressurization, etc. shall be accomplished by using software algorithms in the respective DDC. Final control devices (valve operators, damper actuators, etc.) located in mechanical equipment rooms shall be electric/electronic operating.
2. All safety devices such as fire alarm shutdown, low limit thermostats, etc., shall be hard wired to accomplish their critical functions completely independent of the DDC and shall have additional outputs as required to service as inputs to the DDC for secondary control and reporting functions.

B. Approved manufacturers:
1. Schneider Electric StruxureWare/EcoStruxure suite of products

C. Control Units: Modular, comprising processor board with programmable, nonvolatile, random-access memory; local operator access and display panel; integral interface equipment; and backup power source.
1. Units monitor or control each I/O point; process information; execute commands from other control units, devices, and operator stations; and download from or upload to operator workstation or diagnostic terminal unit.
2. Stand-alone mode control functions operate regardless of network status. Functions include the following:
a. Global communications.
b. Discrete/digital, analog, and pulse I/O.
c. Monitoring, controlling, or addressing data points.
d. Software applications, scheduling, and alarm processing.
e. Testing and developing control algorithms without disrupting field hardware and controlled environment.

STANDARD APPLICATION PROGRAMS:

a. Electric Control Programs: Demand limiting, duty cycling, automatic time scheduling, start/stop time optimization, night setback/setup, on-off control with differential sequencing, staggered start, antishort cycling, PID control, DDC with fine tuning, and trend logging

b. HVAC Control Programs: Optimal run time, supply-air reset, and enthalpy switchover.
c. Programming Application Features: Include trend point; alarm processing and messaging; weekly, monthly, and annual scheduling; energy calculations; run-time totalization; and security access.
d. Remote communications.
e. Maintenance management.
f. Units of Measure: Inch-pound and SI (metric).

2. Local operator interface provides for download from or upload to operator workstation or diagnostic terminal unit.
3. ASHRAE 135 Compliance: Control units shall use ASHRAE 135 protocol and communicate using ISO 8802-3 (Ethernet) datalink/physical layer protocol.

B. Local Control Units: Modular, comprising processor board with electronically programmable, nonvolatile, read-only memory; and backup power source.
1. Units monitor or control each I/O point, process information, and download from or upload to operator workstation or diagnostic terminal unit.
2. Stand-alone mode control functions operate regardless of network status. Functions include the following:
a. Global communications.
b. Discrete/digital, analog, and pulse I/O.
c. Monitoring, controlling, ore addressing data points.
3. Local operator interface provides for download from or upload to operator workstation or diagnostic terminal unit.
4. ASHRAE 135 Compliance: Control units shall use ASHRAE 135 protocol and communicate using ISO 8802-3 (Ethernet) datalink/physical layer protocol.

C. Power Line Filtering: Internal or external transient voltage and surge suppression for workstations or controllers with the following:
1. Minimum dielectric strength of 1000 V.
2. Maximum response time of 10 nanoseconds.
3. Minimum transverse-mode noise attenuation of 65 dB.
4. Minimum common-mode noise attenuation of 150 dB at 40 to 100 Hz.

UNITARY CONTROLLERS

A. Unitized, capable of stand-alone operation with sufficient memory to support its operating system, database, and programming requirements, and with sufficient I/O capacity for the application.
1. Configuration: Local keypad and display; diagnostic LEDs for power, communication, and processor; wiring termination to terminal strip or card connected with ribbon cable; memory with bios; and 72-hour battery backup.
2. Operating System: Manage I/O communication to allow distributed controllers to share real and virtual object information and allow central monitoring and alarms. Perform scheduling with real-time clock. Perform automatic system diagnostics; monitor system and report failures.
3. ASHRAE 135 Compliance: Communicate using read (execute and initiate) and write (execute and initiate) property services defined in ASHRAE 135. Reside on network using MS/TP datalink/physical layer protocol and have service communication port for connection to diagnostic terminal unit.
4. Enclosure: Dustproof rated for operation at 32 to 120 degrees Fahrenheit (48.89 degrees Celsius).

B. GENERAL PRODUCT DESCRIPTION:
1. The Facility Management System (FMS) shall be capable of integrating multiple building functions including equipment supervision and control, alarm management, energy management, and historical data collection, including past 24 hour continuous Point History of all points, and archiving.

2. The facility management system shall consist of the following:
   a. Standalone Network Control Units (NCUs) LAN Ready
   b. Standalone Application Specific Controllers (ASCs) with HVAC pre-configured software applications programs
   c. Furnish and install electronic VAV box control.
3. System architectural design shall eliminate dependence upon any single device for alarm reporting and control execution. Each NCU panel shall operate independently by performing its own specified control, alarm management, operator I/O, and historical data collection. The failure of any single component or network connection shall not interrupt the execution of control strategies at other operational devices.
4. Standalone NCU panels shall be able to access any data from, or send control commands and alarm reports directly to any other NCU panel or combination of panels on the network without dependence upon a central processing device. Standalone NCU panels shall also be able to send alarm reports to multiple operator workstations without dependence upon a central processing device.

6.02 NETWORKING/COMMUNICATIONS:

A. LOCAL BUILDING COMMUNICATION:
   1. All local Application Specific Controllers (ASC) shall be connected to a Network Control Unit (NCU) to facilitate global control decision, time scheduling of occupancy monitor of zone performance and provide for past 24 hour point history of all space temperatures.
   2. Communication to local ASC's shall be 9600 baud or greater. The communication protocol for both above LAN communication shall be described in a readily available published document available to the public. Building to Building proprietary LAN communication protocols shall not be accepted.

6.03 ZONE SENSOR: (ROOM THERMOSTAT)

A. The Zone sensor shall be equivalent to Johnson Controls TE-6000 with programming jack series or equal. Sensor cover shall be a beige high impact plastic cover with brushed aluminum face. Sensor dimensions shall not exceed 3" x 4" and shall not protrude from the wall more than 2".
   1. Sensors with a no external controls shall be installed in all transient areas.
   2. Sensors with override switches shall be installed in all open work areas and multiple private office zones.
   3. Sensors with override switches and setpoints shall be installed in all single zone private offices and conference rooms.
   4. Provide a mechanism for adjusting setpoint within a limited range at the sensor. Provide legend indicating the graduated scale temperature setpoints on the sensor face.
   5. Provide an override switch to signal the controller when the zone is occupied.
   6. The temperature sensor shall be a high quality, high output, wire wound nickel resistant sensor. The temperature sensing element shall be mounted under the aluminum faceplate allowing the sensor appropriate response to the zone's thermal elements. Installed accuracy shall be +1oF over a 32oF to 86oF range.
   7. The zone sensor shall include a jack for connection of the service tool. To prevent unauthorized tampering and vandalism, the jack shall be mounted under the sensor's cover. The cover shall be held in place by a recessed socket head set screw requiring an Allen wrench for removal. Sensors having the service tool jack exposed shall not be accepted.

6.04 APPLICATION SPECIFIC FUNCTION MODULES:

6.05 RELAY KIT (RLY): A RELAY KIT WITH MANUAL OVERRIDE SWITCH SHALL BE FURNISHED AND INSTALLED ON ALL DIGITAL OUTPUTS SIGNALS FOR START/STOP OF THE AIR HANDLING UNITS AND ASSOCIATED EQUIPMENT. THE RELAY KITS SHALL BE INSTALLED FOR EASE OF MAINTENANCE AND MANUAL OVERRIDING OF BINARY OUTPUT POINTS. EACH RELAY KIT SHALL HAVE THE FOLLOWING BUILT-IN FEATURES:

A. Auto/Manual Switch to Enable/Disable Local Control

B. Separate On/Off Buttons for Override Control

C. Local Relay Kit Monitoring Contact to advise the operator at the NCU or Operator's Workstation if any of the Auto/Manual Switches have been placed in the Manual Override Position.

D. Override switches shall be able to operate the motor loads or starter coils whether the controller is powered or de-energized.

6.06 ELECTRIC DAMPER ACTUATORS FOR OUTSIDE, RETURN, AND RELIEF DAMPERS AND OTHER ACTUATORS REQUIRING SPRING RETURN:

A. Electronic direct-coupled actuators shall be provided. The actuator shall be fastened to the damper shaft via a clamp assembly of a V bolt design, with associated V shaped toothed cradle. Where direct-couple mounting is not feasible, provide factory cataloged brackets, mounting kits, and hardware. All outside air, return air, relief air, return/relief air and exhaust air motorized dampers shall be provided with an internal mechanical spring return mechanism built into the actuator housing. Non-mechanical forms of fail-safe operations shall not be acceptable. Spring return actuators shall be capable of CW or CCW mounting. All outside air, relief air and exhaust air dampers shall be normally closed. All return air and return/relief air dampers shall be normally open. The actuators shall be of sufficient capacity to provide a minimum of 5 inch (127 mm)-lb/sq.ft. for opposed blade dampers and 7 inch (177.8 mm)-lb/sq.ft. for parallel blade dampers. All actuators shall be brushless DC motors. Mounting shall provide for servicing and proper alignment with the damper shaft to minimize drag and slippage on the shaft.

B. Actuators shall be UL Standard 873 listed. The actuator shall be have electronic overload or digital rotation sensing circuitry to prevent damage to the actuator throughout the entire rotation of the actuator. Mechanical end switches or magnetic clutch protection shall not be acceptable. All 24 VAV/VDC actuators shall operate on Class 2 wiring, and shall not require more than 10 VA for AC, or more then 8 watts for DC applications. Actuators shall be provided with a conduit fitting and a minimum 3 foot (91.44 cm) electrical cable, and shall be pre-wired. Actuators shall be designed for a minimum of 60,000 full stroke cycles at the actuator’s rated torque, and shall have a 2 year unconditional manufacturer’s warranty.

C. Proportional actuators shall provide a 2-10 VDC or 4-20mA operating range, and shall provide a 2-10 VDC position feedback signal. An actuator capable of accepting a pulse width modulating control signal and providing full proportional operation of the damper is acceptable. All modulating actuators shall have an external, built-in switch to allow the reversing of direction of rotation.

D. Where noted on the drawings, provide damper operators to meet Class I Div II and Class II Div II requirements.

E. Manufacturer: Schneider, , Belimo, Seimens.

6.07 VALVE ACTUATORS:

A. General: Furnish valve actuators with adequate capacity to operate the valve smoothly through the operating range. Provide oversized motors or operator if needed. Voltage ranges shall be adjustable.

B. Valve actuators for control of hot water and chilled water shall be of the modulating type with a range of at least 100 to 1. Valves actuator shall be electric with either proportional or incremental control. Reference Section 230900 for description of control valve bodies.

6.08 PRESSURE SWITCH FOR DIRTY FILTER INDICATION:

A. .05 - 12" wg adjustable Dwyer 1630

B. Johnson P-32

6.09 HAND/AUTO SWITCHES, MANUAL ANALOG OUTPUT DEVICES (POTENTIOMETERS), HAND GRADUALS, ETC., AS NEEDED.

6.10 NON VAV BOX TEMPERATURE SENSORS:

A. Furnish and install electronic room, duct and immersion temperature transmitters of the linear precision resistance element of resistance averaging element. Their range shall be -55oF to 250oF with an accuracy of plus or minus .25oF. Limited range sensors shall be acceptable provided they are capable of sensing the range expected for the point at the specified accuracy.

B. Temperature sensors shall be of the thermistor (PTC) nickel wire, or silicon type with a high resistance change versus temperature change to insure good resolution and accuracy. Sensors shall be available for room, duct or wall mounting. Sensors shall connect to remote controller by means of a two-wire unshielded cable. Room type sensors shall be available with built-in setpoint potentiometer and programming jack. Sensors shall be available in various ranges to properly suit the application.
   1. Johnson Controls Inc. TE-6000 series (temperature sensor only), Johnson Controls Inc.
   2. HE-6413 series (humidity/temperature).

C. Duct-mounted averaging type temperature sensor shall utilize a nickel resistance sensing element incorporated in a copper capillary of 27 feet (822.96 cm). The sensor shall vary the output voltage with a change in temperature. Sensor shall connect to the remote controller by means of a three-wire unshielded cable. Johnson Controls Inc. TE-6000 series.

D. Outdoor air sensor shall be of the PTC silicon, nickel or RTD type with a high resistance change versus temperature change. Sensor shall be available for outdoor or duct mounting. Sensor shall connect to remote controller by means of a two-wire unshielded cable. Shield outside air sensing transmitter from the effects of sunlight.

E. Where transmitters are used for sensing liquid temperatures, furnish with brass separate wells.

6.11 AIR DUCT DETECTORS: FURNISHED, INSTALLED AND WIRED BY DIVISION 26, ELECTRICAL CONTRACTOR.

6.12 LOW LIMIT THERMOSTATS:

A. Provide manual reset low limit thermostats in the leaving air of each coil that is subject to freezing conditions and as specified elsewhere in these specifications. Thermostats shall have a 20 foot (609.6 cm) element and shall respond to the coldest one foot section of that element. Provide sufficient thermostats to adequately protect the entire coil face area (a minimum of one for every 40 sq feet (0.04306 sq cm) of coil). Unless otherwise specified, activation of the low limit thermostat shall stop the air handling unit, close the outside air damper.

6.13 VARIABLE FREQUENCY DRIVES (VFD): THE VFD'S SHALL BE FURNISHED AND INSTALLED AS SPECIFIED.

A. The DDC controller shall furnish required 4-20ma control signal to modulate the VFD. Refer to Section 230513 for description of VFD’s.

PART III – EXECUTION

7.01 EXAMINATION:

A. Verify that conditioned power supply is available to control units and operator workstation.

7.02 INSTALLATION:

A. Install software in control units and operator workstation(s). Implement all features of programs to specified requirements and as appropriate to sequence of operation.

B. Connect and configure equipment and software to achieve sequence of operation specified.

C. Verify location of thermostats, humidistats, and other exposed control sensors with Drawings and room details before installation. Install devices 48 inches (1219.2 mm) above the floor.
   1. Install averaging elements in ducts and plenums in crossing or zigzag pattern.

D. Install guards on thermostats in the following locations:
   1. Entrances.
   2. Public areas.
   3. Where indicated.

E. Install automatic dampers according to Division 22 and 23 Section "Duct Accessories."

F. Install damper motors on outside of duct in warm areas, not in locations exposed to
   1. outdoor temperatures

G. Install electronic and fiber-optic cables according to Division 26 Section "Voice and Data Communication Cabling."

7.03 ELECTRICAL WIRING AND CONNECTION INSTALLATION:

A. Install raceways, boxes, and cabinets according to Division 26 Section "Raceways and Boxes."

B. Install building wire and cable according to Division 26 Section "Conductors and Cables."

C. Install signal and communication cable according to Division 26 Section "Voice and Data Communication Cabling."
   1. Conceal cable, except in mechanical rooms and areas where other conduit and piping are exposed.
   2. Install exposed cable in raceway.
   3. Install concealed cable in raceway.
   4. Bundle and harness multiconductor instrument cable in place of single cables where several cables follow a common path.
   5. Fasten flexible conductors, bridging cabinets and doors, along hinge side; protect against abrasion. Tie and support conductors.
   6. Number-code or color-code conductors for future identification and service of control system, except local individual room control cables.
   7. Install wire and cable with sufficient slack and flexible connections to allow for vibration of piping and equipment.

D. Connect manual-reset limit controls independent of manual-control switch positions. Automatic duct heater resets may be connected in interlock circuit of power controllers.

E. Connect hand-off-auto selector switches to override automatic interlock controls when switch is in hand position.

FIELD QUALITY CONTROL

A. Manufacturer's Field Service: Engage a factory-authorized service representative to inspect field-assembled components and equipment installation, including connections, and to assist in field testing. Report results in writing.

B. Perform the following field tests and inspections and prepare test reports:
   1. All output channels shall be commanded (on/off, stop/start, adjust, etc.) and their operations verified.
   2. All analog input channels shall be verified for proper operation.
   3. All digital input channels shall be verified by changing the state of the field device and observing the appropriate change of displaying value.
   4. If a point should fail testing, perform necessary repair action and retest failed point and all interlocked points.
   5. Automatic control operation shall be verified by introducing an error into the system and observing the proper corrective system response.
   6. Selected time and setpoint schedules shall be verified by changing the schedule and observing the correct response on the controlled outputs.

C. DDC Verification:
   1. Verify that instruments are installed before calibration, testing, and loop or leak checks.
   2. Check instruments for proper location and accessibility.
   3. Check instrument installation for direction of flow, elevation, orientation, insertion depth, and other applicable considerations.
   4. Check instrument tubing for proper fittings, slope, material, and support.
   5. Check installation of air supply for each instrument.
   6. Check flow instruments. Inspect tag number and line and bore size, and verify that inlet side is identified and that meters are installed correctly.
   7. Check pressure instruments, piping slope, installation of valve manifold, and self-contained pressure regulators.
   8. Check temperature instruments and material and length of sensing elements.
   9. Check control valves. Verify that they are in correct direction.
   10. Check air-operated dampers. Verify that pressure gages are provided and that proper blade alignment, either parallel or opposed, has been provided.
   11. Check DDC system as follows:
      a. Verify that DDC controller power supply is from emergency power supply, if applicable.
      b. Verify that wires at control panels are tagged with their service designation and approved tagging system.

D. Verify that spare I/O capacity has been provided.

E. Verify that DDC controllers are protected from power supply surges.

F. Replace damaged or malfunctioning controls and equipment and repeat testing procedures.

ADJUSTING

CALIBRATING AND ADJUSTING

1. Calibrate instruments
2. Make three-point calibration test for both linearity and accuracy for each analog instrument.
3. Calibrate equipment and procedures using manufacturer’s written recommendations and instruction manuals. Use test equipment with accuracy at least double that of instrument being calibrated.
4. Control System Inputs and Outputs:
   a. Check analog inputs at 0, 50, and 100 percent of span.
   b. Check analog outputs using milliampere meter at 0, 50, and 100 percent output.
   c. Check digital inputs using jumper wire.
   d. Check digital outputs using ohmmeter to test for contact making or breaking.
   e. Check resistance temperature inputs at 0, 50, and 100 percent of span using a precision-resistant source.
5. Flow:
   a. Set differential pressure flow transmitters for 0 and 100 percent values with 3-point calibration accomplished at 50, 90, and 100 percent of span.
   b. Manually operate flow switches to verify that they make or break contact.
6. Pressure:
   a. Calibrate pressure transmitters at 0, 50, and 100 percent of span.
   b. Calibrate pressure switches to make or break contacts, with adjustable differential set at minimum.
7. Temperature:
   a. Calibrate resistance temperature transmitters at 0, 50, and 100 percent of span using a precision-resistance source.
   b. Calibrate temperature switches to make or break contacts.
8. Stroke and adjust control valves and dampers without positioners, following the manufacturer’s recommended procedure, so that valve or damper is 100 percent open

and closed.

9. Stroke and adjust control valves and dampers with positioners, following manufacturer's recommended procedure, so that valve and damper is 0, 50, and 100 percent closed.
10. Provide diagnostic and test instruments for calibration and adjustment of system.
11. Provide written description of procedures and equipment for calibrating each type of instrument. Submit procedures review and approval before initiating startup procedures.

ADJUST INITIAL TEMPERATURE AND HUMIDITY SET POINTS.

OCCUPANCY ADJUSTMENTS: WHEN REQUESTED WITHIN 12 MONTHS OF DATE OF SUBSTANTIAL COMPLETION, PROVIDE ON-SITE ASSISTANCE IN ADJUSTING SYSTEM TO SUIT ACTUAL OCCUPIED CONDITIONS. PROVIDE UP TO THREE VISITS TO PROJECT DURING OTHER THAN NORMAL OCCUPANCY HOURS FOR THIS PURPOSE.

DEMONSTRATION

A. Engage a factory-authorized service representative to train Owner’s maintenance personnel to adjust, operate, and maintain HVAC instrumentation and controls. Refer to Division 1 Section "Demonstration and Training."

END OF SECTION 230923

SECTION 230933
ELECTRIC CONTROL SYSTEMS

PART I - GENERAL:

1.01 RELATED DOCUMENTS: SEE SECTION 230900.

1.02 DESCRIPTION OF WORK:

A. Electric control functions and systems indicated on the drawings and specified herein.

B. Complete interrelationships with automation systems and mechanical equipment.

1.03 QUALITY ASSURANCE: SEE SECTION 230900.

1.04 SUBMITTALS: SEE SECTION 23 09 00.

1.05 DELIVERY, STORAGE AND HANDLING: SEE SECTION 230900.

1.06 INSTRUCTION OF OWNER'S PERSONNEL: SEE SECTION 230900.

1.07 WARRANTIES: SEE SECTION 230900.

1.08 CLEANING AND LUBRICATION: SEE SECTION 230900.

1.09 TESTING AND ADJUSTING OF SYSTEM: SEE SECTION 230900.

PART II - MATERIALS AND METHODS

2.01 ELECTRICAL POWER SUPPLY:

1. Obtain power from Division 26 distribution panel. Furnish appropriate circuit breakers and extend conduit and wiring assigned to this division.
2. Furnish and install UL listed voltage reducing transformers required for this work. Size transformers to see no more than 70 percent of rated capacity at full load. Use industrial quality "machine tool" grade transformers.
3. Make all electrical installations in conformance with the National Electrical Code (current edition) and in accordance with Division 26.
4. Use same product lines for similar devices as used by electrician to result in a coherent project.
5. Control Wiring:
   a. In concealed locations above lay-in ceilings low voltage conductor may be installed without conduit. Low voltage conductor shall be UL listed Article 725 Plenum Cable. Install the cable parallel to building walls.
   b. In all other building areas, i.e., electrical rooms, mechanical rooms, high temperature water rooms, above “hard” ceilings, within walls, etc., all control wiring shall be installed in conduit per National Electric Code. Installation shall be square with the walls of the buildings.
   c. Number and code all wiring.
6. Use no wire smaller than 16 gauge, no conduit smaller than 1/2".

2.02 ELECTRIC THERMOSTATS:

A. Wall-mounted, line voltage. For loads above device rating, use control circuit with auxiliary relay switching.

B. For Mechanical Rooms: Johnson T26 or prior approved equal, 2 spdt switches, 0.7 KW rating. Adjustable interstage differential.

TIMER SWITCHES:

A. Wall-mounted, line voltage, 0-120 minutes minimum adjustable range with a minimum 30 second time delay.

B. IDEC GT3A series or prior approved equal.

3.02 SMOKE DETECTORS: FOR INSTALLATION IN ALL FAN SYSTEMS ABOVE 2,000 CFM, SYSTEMS 15,000 CFM AND LARGER REQUIRE TWO SUCH, ONE IN RETURN, ONE IN SUPPLY AIR, FURNISHED BY DIVISION 260000 AND INSTALLED BY THIS DIVISION. POWER AND FIRE ALARM WIRING BY DIVISION 260000, CONTROL CIRCUIT ALARM CONTACT BY THIS DIVISION.

3.03 FREEZESTATS:

A. Manual reset, non-averaging, extended capillary tubes. Honeywell

B. L-480G, Johnson A11A-I/A70HA-1. Penetrate plenum wall with grommet protection, support capillary on 1/4" copper tubing. Use DPDT action as needed or auxiliary relays with powered circuits.

3.04 FIRESTATS, HI-LIMIT THERMOSTAT:

A. Manual reset, break on rise for protection, make on rise for alarm with relay needed to make on rise.

B. Honeywell L-4029E.
   1. Johnson A25AN-1

3.05 AUXILIARY RELAYS:

A. Light Duty - Honeywell R4222/R8222.
   1. Heavy Duty - Square D, Class 8501, Type X.
   2. T-E, S & S.

3.06 TIME DELAY RELAYS:

A. Aquastat Series 7000 with appropriate action.

3.07 ELECTRIC DAMPER ACTUATORS FOR EXHAUST FANS OR VENTILATION FANS:

A. General Actuators: 120 VAC, 2-position control. Size motor to damper for non-overloading characteristics. Fit with adjustable position and switches to limit stroke. Two-position actuators shall not require more than 10 VA.

B. Manufacturer: Johnson, Siemens, Belimo.

END OF SECTION 230933

SECTION 232300
REFRIGERATION PIPING AND EQUIPMENT

PART 1 - GENERAL

1.01 REFERENCE STANDARDS

A. ASTM B88 - Standard Specification for Seamless Copper Water Tube; 2022.

1.02 GENERAL MECHANICAL REQUIREMENTS:

A. All pertinent sections of Section 230000 - General Mechanical Requirements are a part of the work described in this section.

B. All pertinent sections of Division 22 - General Requirements for Plumbing and Piping are a part of the work described in this section.

1.03 SUMMARY:

A. This section specifies:
   1. Refrigeration piping systems and equipment for split air conditioning systems.
   2. Piping, valves, specialties.
   3. Split AC system equipment.

1.04 STANDARDS:

A. International Building Code/International Mechanical Code

B. Local Codes and Ordinances

C. State Pressure Vessel Regulations

D. EPA Requirements.

1.05 SHOP DRAWINGS/SUBMITTALS:

A. Submit a list of all materials to be used indicating brand or source, type and service.

B. Submit shop drawings for all equipment, valves and specialties, including shop drawing showing proposed pipe routing, sizing, valving, etc.

1.06 CONTRACTOR QUALIFICATION:

A. The piping contractor for this work shall be licensed as a firm in the Contractor state of origin and in the state where the work is performed.

B. The Contractor shall have a publicly registered bonding capacity of sufficient amount to cover this work and all other work in progress by the Contractor.

C. All workmen employed in the project shall carry state licenses as journeyman or apprentice pipe fitters with additional certification for welders.

1.07 SCOPE OF THE WORK:

A. Furnish and install all field fabricated refrigeration systems and related work to effect a complete installation.
   1. Provide and install complete refrigeration piping systems and equipment for split air conditioning systems as indicated in the Contract Documents and as specified in this section. Make systems fully operational.
   2. Piping, valves, specialties.
   3. Split AC system equipment.
   4. Other work indicated on the drawings.

1.08 INSTRUCTION OF OWNER'S PERSONNEL:

A. Purpose is to provide a transition of the systems from the Contractor to the Owner, leaving the Owner's personnel familiar with and well qualified to operate and maintain the systems.

B. Instruction to cover purpose and function of each system and its components, to show proper operating technique, to show proper maintenance technique.

1.09 WARRANTIES: SEE SECTION 230000.

PART II - MATERIALS AND METHODS

2.01 EQUIPMENT: ALL MAJOR ITEMS OF REFRIGERATION EQUIPMENT SHALL BE AS SPECIFIED IN THE EQUIPMENT SCHEDULES ON THE DRAWINGS AND SHALL BE FURNISHED COMPLETE WITH ALL ACCESSORIES NORMALLY SUPPLIED WITH THE CATALOG ITEM LISTED AND ALL OTHER ACCESSORIES NECESSARY FOR A COMPLETE AND SATISFACTORY OPERATING SYSTEM.

2.02 SPLIT A/C UNITS:

A. Extent of Work Provide split type A/C units, complete in all components as indicated on the drawings.

B. Outdoor Condensing Units: Outdoor mounted, air cooled unit with hermetic or rotary compressor, air cooled coil and propeller type cooling fan.
   1. Cabinet: Cabinet shall be constructed of galvanized steel and finished with a baked enamel painting process. Unit access panels shall be removable and shall provide full access to all internal components.
   2. Fans: Outdoor fans shall be direct-drive propeller type with totally enclosed single phase motors with class B insulation and permanently lubricated sleeve bearings. Motor shall be protected by internal thermal overload protection.
   3. Compressor: Compressor shall be fully hermetic or scroll type compressor equipped with a complete oil system, operating oil charge and motor. Motor shall be equipped with internal overloads which protect the compressor from overtemperature and overcurrent. Scroll type compressors shall also be equipped with high discharge gas temperature protection.
   4. Outdoor Coil: Coil shall be constructed of seamless copper tubes mechanically bonded to aluminum fins.
   5. Refrigeration Circuit: Refrigerant circuit components shall include brass service valves and port connections, schrader type fittings with brass caps, accumulator, pressure relief, and a full charge of refrigerant.
   6. Safeties: The condensing unit shall contain the following safety circuitry and components.
      a. Time delay restart to prevent short cycling.
      b. Auto restart on power failure.
      c. High and low pressure switches.
      d. High pressure relief.
      e. Outdoor fan failure protection.

C. Indoor Fan Unit: Indoor wall mounted direct expansion unit with forward curved fan, cooling coil and micro-processor based controls in one cabinet.
   1. Cabinet: Cabinet components including supply and discharge grilles shall be fabricated from high impact polystyrene. Cabinet shall be thermally and acoustically insulated to improve performance.
   2. Fans: Fans shall be fabricated of high impact polystyrene and shall be forward curved is design for quiet operation. Fan motor shall be open drip proof permanently lubricated ball bearing type with inherent overload protection. Fan motors shall be 3 speed.
   3. Coil: Coil shall be constructed of aluminum fins seamlessly bonded to copper tubes with galvanized steel tube sheets. A full length drip pan shall be provided.
   4. Controls: Controls shall be microprocessor based and shall control space temperature, determine optimal fan speed, and run self diagnostics. The unit shall provide the following minimum control functions.
      a. Automatic reset function after power failure.
      b. 24-hour timer cycle for system auto start/stop.
      c. High discharge air temperature shutdown shall be provided.
      d. Indoor coil freeze protection.
      e. Wireless infrared remote control.

f. Automatic air sweep control to provide equal air distribution to all areas.
g. Dehumidification mode shall be provided.
h. Fan only operation.
i. A time delay shall prevent compressor short cycling.

D. Approved Manufacturers:
1. Daikin
2. Mitsubishi
3. Carrier
4. LG

2.03 PIPING MATERIALS: PIPING MATERIALS SHALL BE AS FOLLOWS UNLESS OTHERWISE INDICATED ON THE APPLICABLE CONTRACT DRAWING:

A. Pipe: "ACR" Type L, hard drawing, degreased, sealed at mill copper tubing, ASTM B88-62, cleaned and sealed at the mill. Pre-charged refrigerant lines shall not be used.

B. Fittings: Long radius, wrought copper type equal to Mueller Streamline, ASA B16.22.1963.

2.04 VALVES, SPECIALTIES, ETC:

A. Filter-Dryer: On lines smaller than 3/4" O.D. filter-dryer shall be a sealed type using male flare fittings. Size shall be full line size. Filter-dryer shall be Sporlan, Mueller or Alco.

B. Sight Glass: Shall be a combination moisture and liquid indicator with protection cap. Sight glass shall be Alco, Mueller, Sporlan or Henry. Size shall be full line size.

C. Flexible Connection: Corrugated bronze hose with single layer of stainless steel exterior braiding, minimum 9 inches (228.6 mm) long with copper tube ends; for system working pressure.

D. Solenoid Valve:
1. Valve: ARI 760, pilot operated, copper or brass body and internal parts, synthetic seat, stainless steel stem and plunger assembly with flared, solder, or threaded ends; for system working pressure. Stem shall permit manual operation in case of coil failure.
2. Coil Assembly: UL listed, replaceable with molded electromagnetic coil, moisture and fungus proof, with surge protector and color coded lead wires, integral junction box 24 volt, confirm and coordinate with DDC controls.

2.05 REFRIGERANT AND LUBRICATING OIL:

A. The Contractor furnish and install all of the refrigerant required to develop the system to its full rating, and in addition to the initial charge, he shall be required to provide, without cost to the Owner, all required refrigerant for the proper operation of the refrigeration apparatus during the first year's operation. The contractor shall be required to provide the initial charge of lubricating oil for all refrigeration apparatus and related equipment. Loss of refrigerant and oil during the first year of operation shall be made good at the contractor's expense.

PART III - EXECUTION:

3.01 INSTALLATION:

A. General: Use best practices of the trade in all installation. Installation shall conform with the American Standard Code for Pressure Piping, ASA B31.5-1962, Refrigeration Piping. Installed piping shall not interfere with the operation and accessibility of doors or windows; shall not encroach on aisles, passageways, and equipment; and shall not interfere with the servicing or maintenance of equipment. Pipe shall be cut accurately to measurements established at the construction site and shall be worked into place without springing or forcing, properly clearing all openings and equipment. Cutting or weakening of structural members to facilitate piping installation is not permitted. Pipes shall have burrs removed by reaming and shall be so installed as to permit free expansion and contraction without damage to joints or hangers. Piping shall be installed in a straight manner, free from traps, and shall be provided with capped or plugged ends, as it is erected, to prevent dirt from entering the system. The piping system shall be provided with isolating hangers as required to prevent vibration of the

compressor operation being carried to the building structure. The piping system shall be provided with gauges as required for the operation of the system, and the suction connection from each coil shall be provided with a test thermometer wall in the pipe for adjustment of the thermostatic expansion valves.

B. Slope of Refrigerant Lines: Slope suction lines down toward compressor 1" per 10 feet (304.8 cm). Locate oil traps every 10 feet at all vertical rises against flow in suction lines. Suction line traps shall be standard one-piece traps.

C. Cleanliness: All refrigerant lines and fittings shall be absolutely clean to avoid system operating difficulties and contamination. Use a good cleaning agent such as trichloroethylene.
   1. Joints:
   2. Brazed joints: Tubing shall be cut square and burrs removed. Both inside of fittings and outside of tubing shall be well cleaned with steel wool, wire brush, or fine emery cloth before sweating.
      a. An inert gas (such as oil pumped dry nitrogen) shall be continuously passed through the copper piping when brazing joints to prevent formation of copper oxide. Care shall be taken to prevent annealing of fittings and tubing when making connections. Joints shall be made with silver bearing brazing material.

3.02 TESTING OF REFRIGERATION PIPING SYSTEM:

A. After the installation of the refrigeration piping system has been completed and before insulation is applied, all pipes shall be tested and proven tight for a period of 24 hours at a pressure of 300 pounds per square inch using oil pumped dry nitrogen.

3.03 EVACUATION AND CHARGING:

A. After completion of the piping pressure test, the refrigeration systems shall be evacuated and dehydrated using a vacuum pump capable of producing at least 0.04 inch (1 mm) Hg absolute. The following procedure shall be followed unless otherwise noted.

B. Connect an accurate high vacuum gauge, such as Stokes or Zimmeril gauge to the system.

C. Connect the vacuum pump to both the high and low side of the system. Leave the compressor suction and discharge service valves closed. Start the vacuum pump.

D. Keep ambient air temperatures above 60o during the evacuation process.

E. Operate the vacuum pump until the system is evacuated to 2.5 mg Hg absolute.

F. Break the system vacuum with oil pumped dry nitrogen. Open the compressor suction and discharge service valves and re-evacuate the system to 0.1 inch (2.5 mm) Hg absolute.

G. After the system has been double evacuated to 0.1 inch (2.5 mm) Hg absolute, close the vacuum pump suction valve and stop the pump. Allow the system to stand under a vacuum a minimum of 12 hours. If no noticeable rise in pressure has taken place after 12 hours, the system may be charged. This test shall be made in the presence of the Owner's representative.

3.04 INSTALLATION OF SPLIT AIR CONDITIONING UNITS:

A. General: Install computer room air conditioning units in accordance with manufacturer=s installation instructions. Install units plumb and level, firmly anchored in locations indicated, and maintain manufacturer=s recommended clearances.

B. Electrical Wiring: Install and connect electrical devices furnished by manufacturer but not specified to be factory mounted. Furnish copy of manufacturer=s electrical connection diagram submittal to electrical contractor.

C. Piping Connections: Install and connect devices furnished by manufacturer but not specified to be factory mounted. Furnish copy of manufacturer=s piping connection diagram submittal to piping contractor.

D. Drain Water Piping: Connect drains to air conditioning unit. Provide pitch and trap as manufacturer’s instructions and local codes require.

E. Field Quality Control: Start-up computer room air conditioning units in accordance with manufacturer's start-up instructions. Test controls and demonstrate compliance with requirements. Work with Division 23 System Commissioning, Testing and Balancing Test and Balance contractor in this work.

END OF SECTION 232300

This page intentionally left blank

SECTION 233100
DUCTWORK

PART I - GENERAL

1.01 REFERENCE STANDARDS

A. NFPA 90A - Standard for the Installation of Air-Conditioning and Ventilating Systems; 2024.

B. NFPA 90B - Standard for the Installation of Warm Air Heating and Air-Conditioning Systems; 2024.

C. UL 181 - Standard for Factory-Made Air Ducts and Air Connectors; Current Edition, Including All Revisions.

1.02 RELATED DOCUMENTS:

A. Drawings and general provisions of Contract, including General and Supplementary Conditions and Division 01 Specification sections, apply to work of this section.

B. Division 23 Basic Mechanical Materials and Methods Sections apply to work of this section.

1.03 SUMMARY:

A. Extent of metal ductwork is indicated on drawings and in schedules, and by requirements of this section.

B. Types of ductwork required for the project include the following:
   1. Round
   2. Rectangular
   3. Spiral
   4. Factory

C. Exterior Insulation of metal ductwork is specified in other Division 23 sections, and is included as work of this section.

D. Refer to other Division 23 sections for exterior insulation of metal ductwork; not work of this section.

E. Refer to other Division 23 sections for ductwork accessories; not work of this section.

F. Refer to other Division 23 sections for packaged rooftop and makeup units; not work of this section.

G. Refer to other Division 23 sections for mechanical controls; not work of this section.

H. Refer to other Division 23 sections for louvers; not work of this section.

I. Refer to other Division 23 sections for motorized dampers.

J. Refer to other Division 23 sections for grilles and diffusers; not work of this section.

K. Refer to other Division 23 sections for testing, adjusting and balancing; not work of this section.

1.04 QUALITY ASSURANCE:

A. Manufacturer's Qualifications: Firms regularly engaged in manufacture of metal ductwork products of types, materials, and sizes required, whose products have been in satisfactory use in similar service for not less than 5 years.

B. Installer's Qualifications: A firm with at least 3 years of successful installation experience on projects with metal ductwork systems work similar to that required for project.
   1. The installer shall have a publicly registered bonding capacity of sufficient amount to cover this work and all other work in progress by the Contractor.
   2. All workmen on the project shall carry state licenses as journeymen or apprentice sheet metal workers with additional certification for welders.

1.05 SUBMITTALS:

A. Product Data: Submit manufacturer's technical product data and installation instructions for metal ductwork materials and products.

B. Shop Drawings: Submit scaled layout drawings of metal ductwork and fittings including, but not limited to, duct sizes, locations, elevations, and slopes of horizontal runs, wall and floor penetrations, and connections. Show interface and spacial relationship between ductwork and proximate equipment. Show modifications of indicated requirements, made to conform to local shop practice, and how those modifications ensure that free area, materials, and rigidity are not reduced.

C. Record Drawings: At project closeout, submit record drawings of installed metal ductwork and ductwork products, in accordance with requirements of General Conditions.

D. Maintenance Data: Submit maintenance data and parts lists for metal ductwork materials and products. Include this data, product data, shop drawings, and record drawings in maintenance manual; in accordance with requirements of General Conditions.

1.06 REFERENCES:

A. Codes and Standards:
1. SMACNA Standards: Comply with SMACNA "HVAC Duct Construction Standards, Metal and Flexible" for fabrication and installation of metal ductwork.
2. AMCA Compliance: Test and rate plenums in accordance with AMCA Standards.
3. ASHRAE Standards: Comply with ASHRAE Handbook, Equipment Volume, Chapter 1 "Duct Construction", for fabrication and installation of metal ductwork.
4. NFPA Compliance: Comply with NFPA 90A "Standard for the Installation of Air-Conditioning and Ventilating Systems" and NFPA 90B "Standard for the Installation of Warm Air Heating and Air-Conditioning Systems".
5. International Building Code/International Mechanical Code: Comply with all sections pertaining to mechanical work.

B. Field Reference Manual: Have available for reference at project field office, copy of SMACNA "HVAC Duct Construction Standards, Metal and Flexible".

1.07 DELIVERY, STORAGE, AND HANDLING:

A. Protection: Protect shop-fabricated and factory-fabricated ductwork, plenums, accessories and purchased products from damage during shipping, storage and handling. Prevent end damage and prevent dirt and moisture from entering ducts, fittings and plenums.

B. Storage: Where possible, store ductwork and plenums inside and protect from weather. Where necessary to store outside, store above grade and enclosed with waterproof wrapping.

PART II - PRODUCTS

2.01 DUCTWORK - GENERAL:

A. Standards: All duct fabrications shall comply with standards and techniques detailed by SMACNA "Duct Construction Manuals" for the appropriate pressure class, and with the ASHRAE Handbook, 1988 edition, Chapter 1, Duct Construction

B. Sheet Metal: Except as otherwise indicated, fabricate ductwork from galvanized sheet steel complying with ASTM A 527, lock forming quality, with G 90 zinc coating in accordance with ASTM A 525; mill phosphatized for exposed locations.

C. Exposed Ductwork Materials: Where ductwork is indicated to be exposed to view in occupied spaces, provide materials which are free from visual imperfections including pitting, seam marks, roller marks, stains and discolorations, and other imperfections, including those which would impair painting. Installation of exposed ductwork shall be laid out in advance and submitted for review. Ductwork shall be hung straight and uniform, points shall be true, seams shall show continuity.

D. Stainless Steel Assemblies: Fabricate of Type 304 SS or Type 316 SS stainless steel sheet complying with ASTM A-167 with all welded joints and seams. Provide polished No. 4 satin finish for all hoods and duct exposed to view, No. 1 finish elsewhere. Protect finished surfaces with mill applied adhesive protective paper through fabrication and installation.

2.02 FITTINGS AND FABRICATION:

A. Fittings: Provide radius type fittings fabricated of multiple sections with maximum 15o change of direction per section. Unless specifically detailed otherwise, use 45o lateral and 45o elbows for branch take-off connections. Where 90o branches are indicated, provide conical type tees.

B. Fabricate duct fittings to match adjoining ducts, and to comply with duct requirements as applicable to fittings. Except as otherwise indicated, fabricate elbows with center-line radius equal to associated duct width; and fabricate to include turning vanes in elbows where shorter radius is necessary. Limit angular tapers to 30o for contracting tapers and 20o for expanding tapers.

C. Fabricate ductwork with accessories installed during fabrication to the greatest extent possible. Refer to Division 23 section "Duct Accessories' for accessory requirements.

D. Fabricate ductwork with duct liner in each section of duct where indicated. Laminate liner to internal surfaces of duct in accordance with instructions by manufacturers of lining and adhesive, and fasten with mechanical fasteners.

E. Offset, transition, adapt ductwork to structural obstacles and work of other trades in a coordinated effort. Layout work to avoid conflict with piping, etc. With review of conditions, teardrop around conflicting piping, lights, etc., all at no added cost to the owner.

2.03 DUCT PRESSURE CLASSIFICATIONS:

A. Low pressure exhaust ductwork and ventilation systems, ducts connected downstream of VAV terminal units, makeup air ductwork, and ducts connected evaporative cooling systems:
   1. Low pressure rectangular ductwork, 3" w.g. Increase metal gauge by 2 (i.e., 20 to 18) for all sizes.
      a. Minimum SMACNA Seal Class A
      b. SMACNA leakage classification
         1) Rectangular, 8
         2) Round and Flat Oval: 4

B. Medium pressure supply ductwork systems. Ducts connected from rooftop unit discharge to VAV terminal box inlet.
   1. Medium pressure supply duct, 6” w.g.
      a. Minimum SMACNA Seal Class A
      b. SMACNA leakage classification
         1) Rectangular, 4
         2) Round and Flat Oval: 2

C. Welding exhaust dust and plenum.
   1. Welding exhaust duct, -15” w.g.
   2. Welding exhaust plenums, -15” w.g.

2.04 LOW PRESSURE RECTANGULAR DUCTWORK: (3" SMACNA PRESSURE CLASS)

A. Rectangular ductwork for use on supply systems up to 2" maximum duct static pressure and 2000 fpm maximum duct velocity shall be constructed of galvanized steel using construction for nominal 3" SMACNA rated systems. Seal all transverse joints with duct cement or tape with "Hardcast TA".

B. Use radius elbows or turning vanes with extended trailing edge. Use a true 1-1/2 time 45o tapping takeoffs with downstream balance damper.

C. Duct dimensions are inside clear. Increase for acoustical lining.

D. For rectangular exhaust ducts, increase metal gauge by 2 (i.e. 20 to 18) for all sizes. Seal all joints.

2.05 MEDIUM PRESSURE DUCTWORK: (6" SMACNA PRESSURE CLASS)

A. General: At Installer's option, provide factory-fabricated duct and fittings, in lieu of shop-fabricated duct and fittings.

B. Round Ductwork: Construct of galvanized sheet steel complying with ASTM A 527 by the following methods and in minimum gauges listed.
   1. Method of
      a. Minimum Gauge Manufacture
      b. 26 Spiral Lockseam
      c. 24 Spiral Lockseam
      d. 22 Spiral Lockseam
      e. 20 Spiral Lockseam
      f. 18 Spiral Lockseam
   2. Provide locked seams for spiral duct; fusion-welded butt seam for longitudinal seam duct.

C. Round Duct Fittings and Couplings: Construct of minimum gauges listed. Provide continuous welds along seams. Mitered elbows shall be of at least 5 piece construction with R/D ratio of 1.5. All branch takeoffs shall be a true 45º takeoff having an overall throat width at the main duct connection of 1-1/2 times the sizes of the branch duct.
   a. Minimum Gauge
   b. 20
   c. 18

D. Single Wall Acoustically Lined Round Duct:
   1. System Performance: The contractor shall furnish and install round metal duct lined with acoustical lining. Product selection shall be based on system thermal/acoustical requirements as specified.
      a. For ductwork requiring 1” acoustical lining:
         1) The installed 1” lning shall have a Thermal Resistance (R-Value) of 4.3 at 75°F mean temperature, and Noise Reduction Coefficients (NRC) of 0.70 to 0.75 per ASTM C 423, Type “A” Mounting.
         2) Metal duct with inside diameter range of 8 – 20” shall be lined with 1” round acoustical liner.
         3) Metal duct with inside diameter range of 18-32” shall be lined with 1” round acoustical liner board.
      b. For ductwork requiring 1-1/2”:
         1) The installed 1-1/2” acoustical lining shall have a Thermal Resistance (R-Value) of 6.5 at 75°F mean temperature, and a Noise Reduction Coefficient (NRC) of 0.90 per ASTM C 423, Type “A” mounting.
         2) Metal duct with inside diameter range of 9 – 22” (229-22.01 inch (559 mm)), shall be lined with 1-1/2” acoustical liner.
         3) Metal duct with inside diameter range of 22 – 38”, shall be lined with 1-1/2” round acoustical liner board.
         4) Metal duct with inside diameter 40” or greater, shall be lined with 1-1/2” round acoustical liner board.
      c. For ductwork requiring 2” acoustical lining:
         1) The installed 2” acoustical lining shall have a Thermal Resistance (R-Value) of 8.0 at 75°F mean temperature, and a Noise Reduction Coefficient (NRC) of 1.0 per ASTM C 423, Type “A” mounting.
         2) Metal duct with inside diameter range of 10 – 28”, shall be lined with 2” round acoustical liner.
         3) Metal duct with inside diameter range of 34” – 62”, shall be lined with 2” round acoustical liner board.
         4) Metal duct with inside diameters 54” or greater, shall be lined with 2” round acoustical liner board.
   2. Performance Requirements:
      a. Acoustical liner products shall be factory coated with a black acrylic polymer formulated with an immobilized, EPA-registered, protective agent to protective agent to protect the coating form potential growth of fungus and bacteria, and shall meet the

requirements of the following test procedures:
1) No detectable fiber loss under electron microscope analysis of isokinetic air sampling at maximum rated velocity, using UL 181 test duct configuration.
2) No observed microbial growth based on ASTM G-21 and G-22 tests for fungus and bacteria growth.
3) Conformance to the requirements of NFPA 90A and 90B for FHC 25/50 and limited combustibility.
4) Conformance to the requirements of the State of Washington Building Services Department requirements for emissions of total volatile organic compounds (TVOC) and formaldehyde (CHOH) in accordance with ASTM D 5116-90.

3. Installation:
   a. Acoustical lining shall be shop-installed in all fittings. Straight duct sections may have acoustical products shop-installed, at the contractor's option, or lining may be installed in straight sections on site.
   b. Installation of the round liner products into the metal ductwork shall be in accordance with the current Johns Manville Spiracoustic Plus Round Liner System Installation Guide.
   c. Each section or fitting shall be inspected for damage or insulation voids prior to installation, and repaired as follows:
      1) Small voids or gaps (< 1/2 " 0.51 inch (13 mm)) shall be filled and/or buttered using Johns Manville SuperSeal® HVTM or SuperSeal® Duct Butter
      2) Large voids or gaps (> 1/2 " 0.51 inch (13 mm)) shall be repaired by cutting a suitable patch section. The patch shall be coated with SuperSeal HV on all edges prior to installation. After patch installation, the airstream surface shall be buttered with SuperSeal HV.
      3) Tears or abrasions of the airstream surface shall be sealed using SuperSeal HV, SuperSeal Edge TreatmentTM, or SuperSeal® Duct Butter.
      4) Tears or abrasions which result in a reduction of insulation thickness > 1/4" (0.24 inch (6 mm)) shall have a patch section inserted as detailed above.
      5) Where the edges of the insulation show evidence of delamination, the damaged area should be secured with SuperSeal HV prior to the surface coating application.
4. Materials:
   a. All duct materials and accessories used in the fabrication and installation of the duct system shall meet the requirements of NFPA 90A and/or NFPA 90B
   b. All factory-applied coating repair and fabrication alteration shall be made using SuperSeal products to assure performance and system integrity. Failure to use SuperSeal products will void product warranties.
   c. Equivalent to Johns Manville Spiralcoustic Plus.

E. Fittings and Couplings: Construct of minimum gauges listed. Provide continuous weld along seams of outer shell. Construct fittings to close tolerance with ductwork.
   a. Nominal Duct
   b. Outer Shell Inner Liner
   c. 20 gauge 20 gauge
   d. 18 gauge 20 gauge
   e. 16 gauge 20 gauge

F. Field joints shall be made up using an initial coat of 3M EC-750 adhesive wrapping the joint with a 3" wide fiberglass strip and applying a final seal coat of adhesive to the fiberglass. Duct sections and fittings shall be held in place at joints with sheet metal screws 6" on centers. Simple coating of joint surfaces with mastic prior to joining is not acceptable (SMACNA Std. P.1-11).
   1. As an alternative method of duct joint sealing, the joints shall be held in place with screws as specified, but the contractor may use "Thermofit" duct sealing bands as manufactured by Rayclad Tubes of Menlo Park, California. Bands shall be installed according to the

manufacturer's directions. The open flame shall not be used in the vicinity of combustible materials.

G. Oval ductwork shall be installed where called for on the plans and where required to conform to tight space requirements encountered during construction. The contractor shall furnish transition pieces as required. Oval ductwork shall have equivalent capacity to the round duct.
   1. At the Contractor's option odd inch diameter round ducts may be increased in size to the next larger even inch providing space considerations are accommodated and all related conditions are resolved by the contractor.

2.06 FACTORY DUCT:

A. Extent of Work: Provide factory duct at connections to air terminal units, at runouts to grilles and diffusers, at points of round to round flexible connections (see also "Flexible Connections") and at other locations indicated or required.

B. Prohibited Material: Do not use single wire helix ducting with vinyl or plastic liner of any type.

C. Factory Duct Non-corrosive Environments: Woven fiberglass fabric impregnated with vinyl or neoprene clamped in a continual helix of aluminum or cold rolled steel. U.L. listed for Class 1 duct, compliant with NFPA 90A and 90B, pressure rated to 12" w.g., equivalent to:

D. Non-insulated: Wiremold 57; Flexmaster Type N145

E. Insulated: Flexmaster Type 4; Thermaflex M-KC

F. Installation: Follow manufacturer’s instructions. Use stainless steel or nylon band clamping rings. In general, do not use lengths in excess of 3 feet (91.44 cm). Make bends only in long radius format. Support duct to avoid droops and kinks.
   1. UNDERGROUND DUCTWORK:
   2. Fiberglass Reinforced Plastic
   3. Shall be constructed of fiberglass reinforced plastic manufactured by Spunstrand, Inc., 1631 Belmont Avenue, Seattle, Washington 93122, (206) 322-7422, and shall be installed in accordance with details on drawings.
   4. All duct sections shall be joined by galvanized sheet metal sleeve installed inside of duct and secured with stainless steel sheet metal screws.
   5. An extruded bead of Presstite No. 579.6 non-hardening waterproof mastic shall be applied to end of one duct to be joined and other duct pressed tightly against bead and secured with screws. Wrap joint with Nashua Waterproof Cloth Tape No. 357 or Nashua Ex-Cor AV1-10 PVC tape covering screw heads. Apply at least two layers of tape. Wipe duct clean before applying tape.

G. All couplings shall be of slip-joint construction with a minimum 2" insertion length.

H. Underground internally insulated duct and fittings construct with outer pressure shell as specified above for underground duct, 2" thick insulation layer, and solid inner liner.

I. Manufacturers: Spunstrand, Shaumberg.

2.07 WELDING EXHAUST DUCT WORK: (-15” SMACNA PRESSURE CLASS)

A. General: At Installer's option, provide factory-fabricated duct and fittings, in lieu of shop-fabricated duct and fittings.
   1. Round Ductwork: Construct of galvanized sheet steel complying with ASTM A 527 by the following methods and in minimum gauges listed.
      a. Method of

B. Minimum Gauge Manufacture
      a. 22 Spiral Lockseam

C. 20 Spiral Lockseam
   1. Provide locked seams for spiral duct; fusion-welded butt seam for longitudinal seam duct.
   2. Round Duct Fittings and Couplings: Construct of minimum gauges listed. Provide continuous welds along seams. Mitered elbows shall be of at least 5 piece construction with R/D ratio of 1.5. All branch takeoffs shall be a true 45º takeoff having an overall

throat width at the main duct connection of 1-1/2 times the sizes of the branch duct.

1) Minimum Gauge
2) 16

2.08 MISCELLANEOUS DUCTWORK MATERIALS:

A. General: Provide miscellaneous materials and products of types and sizes indicated and, where not otherwise indicated, provide type and size required to comply with ductwork system requirements including proper connection of ductwork and equipment.

B. Runout Fittings: Runout fittings shall be used to make round to rectangular duct connections. Use 45o time and a half square to round fittings. Provide with locking quadrant dampers where balance is involved. Provide with insulation guard where insulated duct is involved.

C. Duct Sealing Compound: Duct sealing compound shall be 3M brand number EC-750 or Duro-Dyne S-2. This material shall be used in making up duct joints or in water proofing, caulking plenums, etc.

D. Acoustical Lining: Acoustical lining in ducts shall be 1" thick, 1-1/2 pound density, coated, flexible glass fiber type, set in adhesive and impaled on weld studs spaced not more than 12" on centers and secured with lock washers. Airstream surface faced with black coated matte. Acoustical lining shall completely line the ducts. Lining shall have a fire and smoke hazard rating not exceeding 20-50-50. Owens-Corning, Johns-Manville, Certainteed.

E. All joints, edges and/or surface breaks in the coating of the acoustical lining shall be pointed up to a smooth surface with adhesive.

F. Duct Liner Adhesive: Comply with ASTM C 916 "Specifications for Adhesives and Duct Thermal Insulation".

G. Duct Liner Fasteners: Comply with SMACNA HVAC Duct Construction Standards, Article S2.11.

H. Duct Cement: Non-hardening migrating mastic or liquid neoprene based cement (type applicable for fabrication/ installation detail) as compounded and recommended by manufacturer specifically for cementing fitting components, or longitudinal seams in ductwork.

I. Ductwork Support Materials: Except as otherwise indicated, provide hot-dipped galvanized steel fasteners, anchors, rods, straps, trim and angles for support of ductwork.

2.09 AUXILIARY DRAIN PANS:

A. Extent of Work: Where a equipment cooling coil or duct mounted coil providing a cooling function is mounted in a ceiling plenum or other furred space, or under the emergency generator ventilation duct, provide a secondary drain. This may be an overflow drain connection or a corrosion resistant, watertight drain pan either with drain line extended to a point of visible discharge. (Reference UMC Section 310, 1994 ed.)

B. Construct drain pan of 304 stainless steel with overlapped and soldered corners, with 1" Type M copper tube drain line. Provide long radius bends with cleanout plugs at each change in direction. Provide cleanouts every 20 feet (609.6 cm) or less with “wye” pattern fittings

PART III - EXECUTION

3.01 INSPECTION:

A. General: Examine areas and conditions under which metal ductwork and plenum are to be installed. Do not proceed with work until unsatisfactory conditions have been corrected in a manner acceptable to Installer.

3.02 INSTALLATION OF METAL DUCTWORK:

A. General: Assemble and install ductwork in accordance with recognized industry practices which will achieve air tight (5% leakage for systems rated 3" and under; 1% for systems rated over 3") and noiseless (no objectionable noise) systems, capable of performing each indicated service. Install each run with minimum number of joints. Align ductwork accurately at connections, within 1/8" misalignment tolerance and with internal surfaces smooth. Support

ducts rigidly with suitable ties, braces, hangers and anchors of type which will hold ducts true-to-shape and to prevent buckling. Support vertical ducts at every floor.

1. All necessary allowance and provisions shall be made in the installation of sheet metal ducts for the structural conditions of the building, and ducts shall be transformed or divided as may be required. Whenever this is necessary, the required area shall be maintained. All of these changes, however, must be approved and installed as directed at project. During the installation, the open ends of ducts shall be protected to prevent debris and dirt from entering.

B. Field Fabrication: Complete fabrication of work at project as necessary to match shop-fabricated work and accommodate installation requirements.

C. Routing: Locate ductwork runs, except as otherwise indicated, vertically and horizontally and avoid diagonal runs wherever possible. Locate runs as indicated by diagrams, details and notations or, if not otherwise indicated, run ductwork in shortest route which does not obstruct usable space or block access for servicing building and its equipment. Hold ducts close to walls, overhead construction, columns, and other structural and permanent-enclosure elements of building. Limit clearance to 1/2" where furring is shown for enclosure or concealment of ducts, but allow for insulation thickness, if any. Where possible, locate insulated ductwork for 1" clearance outside of insulation. Wherever possible in finished and occupied spaces, conceal ductwork from view, by locating in mechanical shafts, hollow wall construction or above suspended ceilings. Do not encase horizontal runs in solid partitions, except as specifically shown. Coordinate layout with suspended ceiling and lighting layouts and similar finished work.

D. Electrical Equipment Spaces: Do not run ductwork through transformer vaults and other electrical equipment spaces and enclosures. Maintain clearances above of and in front of electrical panels.

E. Penetrations: Where ducts pass through interior partitions and exterior walls, and are exposed to view, conceal space between construction opening and duct or duct insulation with sheet metal flanges of same gage as duct. Overlap opening on 4 sides by at least 1-1/2". Fasten to duct and substrate.

1. Where ducts pass through fire-rated floors, walls, or partitions, provide firestopping between duct and substrate, in accordance with requirements of Section "Firestopping".

F. Ducts At Structural and Architectural Penetrations: Where ducts are shown connecting to or passing through concrete, gypsum board, masonry openings and along edges of all plenums at floors and walls, provide a continuous 2" x 2-1/8" galvanized angle iron which shall be bolted to the construction and made airtight to the same by applying caulking compound. Sheet metal in these locations shall be bolted to the angle iron. Round high velocity ducts in vertical chases shall be supported with rolled angle rings. Close openings between duct and structure.

G. Cross Breaking: Rectangular sheet metal ducts shall be cross broken on the four sides of each 4-foot panel. All vertical and horizontal sheet metal barriers, duct offsets, elbows, as well as 4-foot panels of straight sections of ducts shall be cross broken. Cross breaking shall be applied to the sheet metal between the standing seams or reinforcing angles; the center of cross break shall be of the required height to assure surfaces being rigid.

H. Coordination: Coordinate duct installations with installation of accessories, dampers, coil frames, equipment, controls and other associated work of ductwork system.

I. Installation: Install metal ductwork in accordance with SMACNA HVAC Duct Construction Standards.

1. Related to final installation cleanliness, damp wipe all ductwork on installation. Cap open duct ends, cover fan inlets, vacuum fan plenums and related installation before starting fans. Run fans only with filters in place.
    a. INSTALLATION OF UNDERGROUND DUCTWORK:
2. Excavate for underground ductwork.
3. Duct shell be located and positioned as shown on the drawings.
4. Slope ductwork at slopes with invert elevations shown on the drawings.

5. Seal all joints water tight. Recoat any marred or scratched surfaces. Wrap all ductwork with visquin vapor barrier before placement of concrete.
6. Underground ductwork to be encased in 4" thick concrete all around. Perform work in a series of pours.
7. Avoid pouring concrete directly on ductwork.
8. Restrain duct with 16 ga galvanized hold down straps.
9. Reinforce and protect ductwork from damage. Remove interior supports after completion of backfill and concrete work.
10. First pour shall act as a base for the duct and shall contain 1” x 18 ga. sheet metal anchor/hold down straps wrapped around the duct and embedded in concrete. Contractor to use duct tape to temporarily hold anchor straps tight to duct exterior while concrete is poured. DO NOT USE SCREWS TO HOLD ANCHOR STRAPS TO DUCT.

3.03 INSTALLATION OF KITCHEN AND DISHWASHER EXHAUST DUCT:

A. Fabricate joints and seams with continuous welds for watertight construction. Provide for thermal expansion of ductwork through 2000oF (1039oC) temperature range. Install without dips or traps which may collect residues, duct off sets to slope toward hoods with greatest slope possible as indicated and shown on drawings. Provide access openings not more than 12 feet (365.76 cm) apart at each change in direction, located on sides of duct 1-1/2" minimum from bottom, and fitted with grease-tight covers capable of holding 10” of pressure of same materials as duct.

B. Leak test each grease duct in accordance with SMACNA HVAC air duct leakage test manual for 10” duct class. All air leaks shall be repaired and sealed with a weld so grease duct does not leak.

3.04 INSTALLATION OF DUCT LINER:

A. General: Install duct liner in accordance with SMACNA HVAC Duct Construction Standards.
   1. As indicated on the drawings, supply, return and exhaust air ductwork shall be lined with acoustical insulation.
   2. In all cases outside air ductwork shall be lined with 2' thick 1-1/2 lb. density acoustical lining unless indicated differently on drawings, i.e. requiring Type 2 plenum.

3.05 INSTALLATION OF FLEXIBLE DUCTS:

A. Maximum Length: For any duct run using flexible ductwork, do not exceed 3'-0" extended length. No elbows allowed.

B. Installation: Install in accordance with Section III of SMACNA's "HVAC Duct Construction Standards, Metal and Flexible".

3.06 HANGERS AND SUPPORTS:

A. It is essential that all ducts shall be rigidly supported. Hangers for low velocity ducts up to 18" in width shall be placed on not more than 10' centers.
   a. Low velocity ducts 19" through 35" in width and greater shall be supported on not more than 5' centers. Where vertical ducts pass through floors or roofs, heavy supporting angles shall be attached to ducts, and to structure. Angles shall be of sufficient size to support the ductwork rigidly and shall be placed on at least two sides of the duct.

B. Construct hangers for rectangular ductwork from galvanized iron l" x 1/16". Hangers shall extend down the sides of rectangular ducts the full depth of the duct and shall be bent underneath the duct 2". Hangers shall be secured to the duct using sheet metal screws or rivets of appropriate sizes on 6" centers, but not less than two screws in the side and one in the bottom of each hanger.

C. For rectangular ducts 36" and greater in width construct hangers from galvanized iron 1-1/2" x 1/16". Hangers shall be installed and secured to duct as described in Paragraph B.

3.07 SUPPORTING DAMPERS: PARALLEL AND OPPOSED BLADE MOTOR OPERATED DAMPERS SHALL BE SUPPORTED BY REINFORCING THE DUCTWORK OR SHEET METAL WALLS AT THE DAMPER LOCATIONS TO CARRY THE WEIGHT OF THE DAMPERS AND THE FORCE EXERTED ON THE DAMPERS DUE TO AIR PRESSURE, OR SHALL BE SUPPORTED INDEPENDENT OF DUCTWORK FROM THE CEILING OR FLOOR, AS CONDITIONS AT THE SITE DETERMINE.

3.08 CONNECTIONS: CONNECTIONS OF HIGH VELOCITY SUPPLY AND EXHAUST DUCTS, FITTINGS, AND HIGH VELOCITY MIXING BOXES SHALL BE MADE AIRTIGHT BY COATING JOINTS WITH MINNESOTA MINING CO. MASTIC, TYPE EC-800, BENJAMIN FOSTER, SHEET METAL PRODUCTS CO., OR APPROVED EQUAL, BEFORE JOINING, AND THEN SEALING THE JOINT WITH ONE LAYER OF "GLASS-FAB" REINFORCING TAPE SET IN A COATING OF THE ABOVE COMPOUND. TAPE AND SEALANT SHALL NOT EXCEED A FLAME SPREAD OF 25 OR A SMOKE DEVELOPMENT OF 50.

3.09 WELDED JOINTS: WELDED DUCTWORK SHALL HAVE EITHER AN ANGLE OR A PIECE OF 1/8" STEEL BAR BEHIND EACH WELD TO ALLOW LAYING OF A NEAT AND CONTINUOUS BEAD.

3.10 AESTHETIC LAYOUTS: CONTRACTOR SHALL LOCATE ALL DIFFUSERS, GRILLES AND OTHER EXPOSED ITEMS IN SUCH A MANNER AS TO FIT SYMMETRICALLY IN ANY GRID SYSTEM OR OTHER AESTHETIC ARCHITECTURAL OR LIGHTING PATTERN. REFER TO REFLECTED CEILING PLANS AND ELECTRICAL LIGHTING LAYOUTS FOR ADDITIONAL INFORMATION. PROVIDE DUCT OFFSETS OR EXTENSIONS AS REQUIRED TO MAKE A PROPER INSTALLATION.

A. Close or cap all duct ends. Use auxiliary blower with air flow meter to establish a duct pressure equivalent to the duct pressure class. Inspect all joints in duct system and seal all identifiable leaks.

3.11 CONSTRUCTION OF PLENUM SYSTEM:

A. General: Construct plenum system where indicated, in accordance with SMACNA duct construction standards and component manufacturer's installation instructions, and with recognized industry practices, to ensure that units comply with requirements and serve intended purposes.

B. Coordination: Coordinate with other work, including ductwork, floor construction, roof decking, piping, and electrical as necessary to interface installation of plenum system with other work.

C. Support: Install floor-mounted plenum system units on 6" high reinforced concrete pad or curb.

3.12 FIELD QUALITY CONTROL:

A. Leakage Tests: After each duct system which is constructed for duct classes over 3" is completed, test for duct leakage in accordance with SMACNA HVAC Air Duct Leakage Test Manual. Air leaks which are in excess of that required to bubble the soap suds (that is, actually blow the suds away) shall be sealed by additional taping and caulking to reduce the leakage to a rate not to exceed slow bubbles forming. Repair leaks and repeat tests until total leakage conforms with Chart of Figure 4-1, Seal Class A, Leakage Class 3 for round/oval, 6 for rectangular.

3.13 EQUIPMENT CONNECTION:

A. General: Connect metal ductwork to equipment as indicated, provide flexible connection for each ductwork connection to equipment mounted on vibration isolators, and/or equipment containing rotating machinery. Provide access doors as indicated.

3.14 ADJUSTING AND CLEANING:

A. Clean ductwork internally of dust and debris, as follows: Before the ceilings are installed, with filters in place, operate the fans at full capacity to blow out dirt and debris from ducts. If it is not practical to use the main supply blower for this test, the ducts may be blown out in sections by a portable fan.

B. Clean external surfaces of foreign substances which might cause corrosive deterioration of metal or, where ductwork is to be painted, might interfere with painting or cause paint deterioration.

C. Balancing:
   1. Refer to Division 23 section "Testing, Adjusting, and Balancing" for air distribution balancing of metal ductwork; not work of this section. However, the Sheet Metal Contractor shall participate fully in this work. Seal any leaks in ductwork that become apparent in balancing process.
   2. If specified conditions cannot be obtained due to deficiencies in equipment performance or improper installation or workmanship, the Mechanical Contractor and his subcontractors shall make any changes necessary to obtain the specified conditions.

END OF SECTION 233100

This page intentionally left blank

SECTION 233300
DUCTWORK ACCESSORIES

PART I - GENERAL

1.01 REFERENCE STANDARDS

A. NFPA 90A - Standard for the Installation of Air-Conditioning and Ventilating Systems; 2024.

1.02 RELATED DOCUMENTS:

A. Drawings and general provisions of Contract, including General and Supplementary Conditions and Division 01 Specification sections, apply to work of this section.

B. Division 23 Basic Mechanical Materials and Methods sections apply to work of this section.

1.03 SUMMARY:

A. Extent of ductwork accessories work is indicated on drawings and in schedules, and by requirements of this section.

B. Types of ductwork accessories required for project include the following:
   1. Dampers
      a. Low pressure manual dampers.
      b. Control dampers.
   2. Smoke dampers.
   3. Fire Smoke dampers.
   4. Turning vanes.
   5. Duct hardware.
   6. Duct access doors.
   7. Flexible connections.

C. Refer to other Division 23 sections for testing, adjusting, and balancing of ductwork accessories; not work of this section.

1.04 QUALITY ASSURANCE:

A. Manufacturer's Qualifications: Firms regularly engaged in manufacture of ductwork accessories, of types and sizes required, whose products have been in satisfactory use in similar service for not less than 3 years.

1.05 SUBMITTALS:

A. Product Data: Submit manufacturer's technical product data for each type of ductwork accessory, including dimensions, capacities, and materials of construction; and installation instructions.

B. Shop Drawings: Submit manufacturer's assembly-type shop drawings for each type of ductwork accessory showing interfacing requirements with ductwork, method of fastening or support, and methods of assembly of components.

C. Maintenance Data: Submit manufacturer's maintenance data including parts lists for each type of duct accessory. Include this data, product data, and shop drawings in maintenance manual; in accordance with requirements of General Conditions.

1.06 REFERENCES:

A. Codes and Standards:
   1. SMACNA Compliance: Comply with applicable portions of SMACNA "HVAC Duct Construction Standards, Metal and Flexible".
   2. Industry Standards: Comply with ASHRAE recommendations pertaining to construction of ductwork accessories, except as otherwise indicated.
   3. UL Compliance: Construct, test, and label fire dampers in accordance with UL Standard 555 "Fire Dampers and Ceiling Dampers".
   4. NFPA Compliance: Comply with applicable provisions of NFPA 90A "Air Conditioning and Ventilating Systems", pertaining to installation of ductwork accessories.

1.07 DELIVERY, STORAGE AND HANDLING:

A. Protection: Protect shop-fabricated and factory-fabricated accessories and purchased products from damage during shipping, storage and handling. Prevent end damage and prevent dirt and moisture from entering ducts and fittings.

B. Storage: Where possible, store accessories inside and protect from weather. Where necessary to store outside, store above grade and enclosed with waterproof wrapping.

PART II - PRODUCTS

2.01 MOTORIZED DAMPERS:

A. Manufacturers: Subject to compliance with requirements, provide products by one of the following:
   1. Greenheck Fan Corporation. (VCD 43)
   2. Tamco (1000-SP)
   3. Pottorff.
   4. Ruskin Company.(CD50)

B. Low-leakage rating, with linkage outside airstream, and bearing AMCA's Certified Ratings Seal for both air performance and air leakage.

C. Frames:
   1. Section:
   2. Hat shaped.
   3. Material:
   4. 6063-T5 Extruded Aluminum

D. Corners:
   1. Mitered-and-welded.

E. Blades: Multiple.
   1. Maximum blade width:
      a. 6 inches (152.4 mm). Airfoil shape
   2. Action as indicated on the drawings.
   3. Material:
      a. 6063-T5 Extruded Aluminum.
   4. Jamb Seals:
      a. Flexible metal compression type.
   5. Blade Edging: Inflatable seal blade edging, or replaceable rubber seals.
      a. Closed-cell neoprene
   6. Blade Axles:
      a. Section:
         1) 1/2 diameter, hex shaped.
      b. Material:
      c. Galvanized steel.
      d. Blade-linkage hardware:
         1) Zinc-plated steel and brass.
         2) Ends sealed against blade bearings:
      e. Operating Temperature Range: From minus 20 to plus 120 degrees Fahrenheit (48.89 degrees Celsius).
      f. Make provisions for mounting of damper actuator out of the air stream.
   7. Bearings:
      a. Type:
         1) Molded synthetic.
         2) Axles: Dampers in ducts with pressure classes of 3-inch wg or more shall have axles full length of damper blades.
   8. Leakage:

a. cfm per square foot at 4” w.g. for 48” x 48” size.

9. Pressure Drop:
   a. Maximum 0.03” w.g. at 1500 fpm across 24” x 24” damper.

2.02 MANUAL BALANCE DAMPERS:

A. Manual balance dampers shall be constructed with 16 ga. galvanized steel structural hat channel frames, 16 ga, galvanized steel blades, synthetic bearings and ½: square steel axles positively locked to damper blades.
   1. Honeywell D-643.
   2. Johnson D-2300.
   3. Ruskin CD-35
   4. Pottorff
   5. Nailor
   6. American Warming,
   7. NCA
   8. Air Balance

2.03 REMOTE DAMPER OPERATORS

A. Manufacturers: Subject to compliance with requirements, provide products by one of the following:
   1. Greenheck
   2. Pottorff.
   3. Ruskin model ZPD
   4. Young Regulator EBD

B. Activated Electric Type:
   1. Description: Electrically activated zone control damper for remote adjustment. When an adjustment is needed the system is powered up by handheld device.
   2. Means: Factory mounted actuator factory wired to damper.
   3. Portable 9 volt -system. No field power requirement.
   4. Mounting: Recessed Wall Box in an accessible location hidden from view
   5. Wall-Box: Concealed mounted on matching J-Box
   6. Wall-Box Porting: 12 ports or more.

2.04 TURNING VANES:

A. Turning vanes shall be installed in all square elbows. Turning vanes shall be single blade. Turning vane spacing shall be per SMACNA. Each blade shall be tack welded or crimped to the carrier frame to prevent rattling.

2.05 DUCT HARDWARE:

A. General: Provide duct hardware, manufactured by one manufacturer for all items on project, for the following:
   1. Test Holes: Provide in ductwork at fan inlet and outlet, and elsewhere as indicated, duct test holes, cover, for instrument tests. Ventlok No. 699 closures shall be provided and installed for each test hole, with sufficient neck length to penetrate the insulation.
   2. Quadrant Locks: Provide for each damper, quadrant lock device on one end of shaft; and end bearing plate on other end for damper lengths over 12". Provide extended quadrant locks and end extended bearing plates for externally insulated ductwork. (Bare duct - Ventlok 620, 635; Insulated duct - Ventlok 627, 628, 637, 638, 629.)

B. Manufacturer: Subject to compliance with requirements, provide duct hardware of one of the following:
   1. Ventfabrics, Inc.
   2. Young Regulator Co.

2.06 DUCT ACCESS DOORS (LOW VELOCITY DUCTWORK):

A. Doors shall be 2" narrower than the duct width by 24" up to a maximum of 24" x 24". Duct access doors shall be furnished for all fire damper links, manual controllers and adjustable balancing devices. Duct access doors for all ductwork (except low pressure ductwork) shall be: Bolted access door, oval shaped constructed of an outer door connected to a an inner plate by spring loaded carriage bolts with wing handles. Inner plate to have cellular sponge gasket for leak free operation up to 20"wg. The door shall have permanently bonded polyester insulation.

2.07 DUCT ACCESS DOORS (MEDIUM VELOCITY DUCTWORK)

A. Door:
1. Oval shape.
2. Constructed of an outer door connected to an inner plate.
3. Spring loaded carriage bolts with wing handles.
4. Inner plate to have rubber gasket.
5. Leak free operation to 20” w.g.
6. Insulated with bonded polyester insulation.

2.08 WALL AND CEILING ACCESS DOORS:

A. Wall and ceiling doors at fire dampers and smoke dampers shall be the same as specified in Section 23 00 00. Doors shall be sized for easy access to fire links and not less than 24" x 24" where possible.

2.09 FLEXIBLE CONNECTIONS:

A. Extent of Work: Provide flexible connections between ductwork or plenums and equipment, such as at fan inlets and discharges, and at other places indicated on the drawings or called for by note or specification.

B. Non-Corrosive Environment or Airstream: Provide material of heavy waterproof woven glass fabric double coated with neoprene or hypalon equivalent to “Ventglas” for interior locations and “Ventlon” for exterior locations, fabric not less than 3-1/4" wide clamped between strips of 24 gauge galvanized iron. Material by Ventfabrics, Inc., Chicago, Ill.

C. Corrosive Environments or Airstream: Provide material of heavy waterproof woven fiberglass fabric coated with Teflon equivalent to AVentel@ by Ventfabrics, Inc., Chicago, Ill.
1. By nature, the material is slippery and requires rigid clamping in the field installation. Install with the coated side to the corrosive air stream. Clamp the material into a stainless steel edging or hinge with a folded fabric edge. Be careful in securing the clamped fabric to the fan or duct as to not penetrate or disturb any protective coatings or surfaces.

PART III - EXECUTION

3.01 INSPECTION:

A. Examine areas and conditions under which ductwork accessories will be installed. Do not proceed with work until unsatisfactory conditions have been corrected in manner acceptable to Installer.

3.02 INSTALLATION OF DUCTWORK ACCESSORIES:

A. Install ductwork accessories in accordance with manufacturer's installation instructions, with applicable portions of details of construction as shown in SMACNA standards, and in accordance with recognized industry practices to ensure that products serve intended function.

B. Install hand operated volume dampers at locations and of sizes shown. Volume dampers shall be controlled by heavy duty locking quadrants mounted on the outside of the duct. Where ducts are insulated, the damper rod shall be extended and the operator shall be mounted on the outside of the insulation. Butterfly dampers may be constructed by the Sheet Metal Contractor. All multi-blade hand dampers shall be the product of one of the manufacturers listed in the Contract Documents. All operator fittings shall be heavy duty commercial grade.

C. Install turning vanes in square or rectangular 90 degree elbows in supply and exhaust air systems, and elsewhere as indicated.

D. Install access doors to open against system air pressure, with latches operable from either side, except outside only where duct is to small for person to enter.

E. Coordinate with other work, including ductwork, as necessary to interface installation of ductwork accessories properly with other work.

3.03 FIELD QUALITY CONTROL:

A. Operate installed ductwork accessories to demonstrate compliance with requirements. Test for air leakage while system is operating. Repair or replace faulty accessories, as required to obtain proper operation and leakproof performance.

3.04 ADJUSTING AND CLEANING:

A. Adjusting: Adjust ductwork accessories for proper settings, install fusible links in fire dampers and adjust for proper action.
   1. Label access doors in accordance with Division 23 section "Mechanical Identification".
   2. Final positioning of manual dampers is specified in Division 23 section "Testing, Adjusting, and Balancing".
   3. Cleaning: Clean factory-finished surfaces. Repair any marred or scratched surfaces with manufacturer's touch-up paint.

3.05 EXTRA STOCK:

A. Furnish extra fusible links to Owner, one link for every 10 installed of each temperature range; obtain receipt.

END OF SECTION 233300

This page intentionally left blank

SECTION 233423
POWER VENTILATORS

PART I - GENERAL

1.01 RELATED DOCUMENTS:

A. Drawings and general provisions of Contract, including General and Supplementary Conditions and Division 01 Specification sections, apply to work of this section.

B. Division 23 General Mechanical Requirements sections apply to work of this section.

C. See Section 23 05 13 Motors, Drives and Electrical Requirements for Mechanical Work.

1.02 SUMMARY:

A. Extent of power and gravity ventilator work required by this section is indicated on drawings and schedules, and by requirements of this section.

B. Types of power and gravity ventilators specified in this section include the following:
   1. Power ventilators.
      a. Roof Mounted Exhaust Fans
      b. In-Line Transfer Fans

C. Refer to Division 23 section "Testing, Adjusting and Balancing" for balancing of power and gravity ventilators; not work of this section.

D. Refer to Division 23 temperature control systems sections for control work required in conjunction with power and gravity ventilators; not work of this section.

E. Refer to Division 26 sections for the following work; not work of this section.
   1. Power supply wiring from power source to power connection on ventilators. Include starters, disconnects, and required electrical devices, except where specified as furnished, or factory-installed, by manufacturer.
   2. Interlock wiring between ventilators; and between ventilators and field-installed control devices as shown in Division 26.
      a. Interlock wiring specified as factory-installed is work of this section.

1.03 QUALITY ASSURANCE:

A. Manufacturer's Qualifications: Firms regularly engaged in manufacture of power and gravity ventilators, of types and sizes required, whose products have been in satisfactory use in similar service for not less than 5 years.

1.04 SUBMITTALS:

A. Product Data: Submit manufacturer's technical data for power and gravity ventilators, including specifications, capacity ratings, dimensions, weights, materials, accessories furnished, and installation instructions.

B. Shop Drawings: Submit assembly-type shop drawings showing unit dimensions, construction details, methods of assembly of components, and field connection details.

C. Wiring Diagrams: Submit manufacturer's electrical requirements for power supply wiring to power ventilators. Submit manufacturer's ladder-type wiring diagrams for interlock and control wiring. Clearly differentiate between portions of wiring that are factory-installed and portions to be field-installed.

D. Maintenance Data: Submit maintenance data and parts list for each type of power and gravity ventilator, accessory, and control. Include this data, product data, shop drawings, and wiring diagrams in maintenance manual; in accordance with requirements of Division 23.

1.05 REFERENCES:

A. Codes and Standards:
   1. AMCA Compliance: Provide power ventilators which have been tested and rated in accordance with AMCA standards, and bear AMCA Certified Rating Seal.

2. UL Compliance: Provide power ventilators which are listed by UL and have UL label affixed.
3. NEMA Compliance: Provide motors and electrical accessories complying with NEMA standards.

PART II - PRODUCTS

2.01 ROOF MOUNTED EXHAUST FANS (REF):

A. Description: Fan shall be a spun aluminum, roof mounted, belt driven, up blast or down blast (see schedule) centrifugal exhaust ventilator. Size and capacity as listed on the drawings.

B. Certifications: Fan shall be manufactured at an ISO 9001 certified facility. Fan shall be listed by Underwriters Laboratories (((UL 705))). Fan shall bear the AMCA certified ratings seal for sound and air performance.

C. Construction: The fan shall be of bolted and welded construction utilizing corrosion resistant fasteners. The spun aluminum structural components shall be constructed of minimum 16 gauge marine alloy aluminum, bolted to a rigid aluminum support structure. The aluminum base shall have continuously welded curb cap corners for maximum leak protection. The discharge baffle shall have a rolled bead for added strength. An integral conduit chase shall be provided through the curb cap and into the motor compartment to facilitate wiring connections. Bearings and drives shall be mounted on a minimum 14 gauge steel power assembly, isolated from the unit structure with rubber vibration isolators. These components shall be enclosed in a weather-tight compartment, separated from the exhaust airstream. Unit shall bear an engraved aluminum nameplate. Hinged base.

D. Wheel: Wheel shall be centrifugal backward inclined, constructed of 100% aluminum, including a precision machined cast aluminum hub. Wheel inlet shall overlap an aerodynamic aluminum inlet cone to provide maximum performance and efficiency. Wheel shall be balanced in accordance with AMCA Standard 204-96, Balance Quality and Vibration Levels for Fans.

E. Motor: Motor shall be EC variable speed type with permanently lubricated sealed ball bearings and furnished at the specified voltage, phase and enclosure.

F. Bearings: Bearings shall be designed and individually tested specifically for use in air handling applications. Construction shall be heavy duty regreasable ball type in a cast iron housing selected for a minimum L50 life in excess of 200,000 hours at maximum cataloged operating speed.

G. Furnish with insulated hinged roof curb, to raise fan 12" above roof. Compatible with roofing and roof slope. Furnish with bird screen.

H. Furnish with factory installed and wired isolation damper complete with electric damper actuator. Damper shall be Ruskin CD50 or Greenheck VCD43. Damper shall be mounted inside the curb and accessed thru the hinged opening between the curb and fan base.

I. Control:
   1. Option 1 (REF-1, 4, 5, & 6):
      a. Furnish fan with on-board speed adjustment potentiometer for balancing
   2. Option 2 (REF-3 & 4):
      a. Furnish fan with factory provided motor speed controller that provides the following functions:
         1) Hand/Off/Auto-Local/Auto Remote operations
         2) Speed control from a remote 0-10V signal from the Building Automation System
         3) On-Board Speed Control
         4) Run Status Relay Output
         5) Auxiliary Contact Output.
         6) Terminal block for Remote start/stop from the Building Control system.
         7) Speed controller to be field mounted within a panel enclosure.
         8) Provide required transformer and terminal block with the fan.

J. Manufacturer: Subject to compliance with requirements, provide exhaust fans from one of the following:
   1. Greenheck
   2. Cook
   3. Acme
   4. Twin City
   5. PennBarry

2.02 INLINE TRANSFER AIR FANS - DIRECT DRIVE (ITF-1)

A. General

2.03 REFERENCE STANDARDS

A. ISO 9001 - Quality Management Systems — Requirements; 2015, with Amendment (2024).
   1. Fan shall be duct mounted, direct driven centrifugal square inline.
   2. Fan shall be manufactured at an ISO 9001 certified facility. Fan shall be listed by Underwriters Laboratories (((UL 705))). Fan shall bear the AMCA certified ratings seal for sound and air performance.
   3. Size and capacity as indicated on the drawings.

B. Construction
   1. The fan shall be of bolted construction utilizing corrosion resistant fasteners. Housing shall be minimum 18-gauge galvanized steel with integral duct collars.
   2. Bolted access doors shall be provided on three sides, sealed with closed cell neoprene gasketing.
   3. Housing shall be pre-drilled to accommodate universal mounting for vertical or horizontal installation.
   4. Unit shall bear an engraved aluminum nameplate. Nameplate shall indicate design CFM and static pressure.
   5. Housing to be internally insulated with ¾" lining.

C. Wheel:
   1. Wheel shall be centrifugal backward inclined, constructed of 100% aluminum, including a precision machined cast aluminum hub. Wheel inlet shall overlap an aerodynamic aluminum inlet cone to provide maximum performance and efficiency. Wheel shall be balanced in accordance with AMCA standard 204-05, balance quality and vibration levels for fans.

D. Motor:
   1. Motor shall be an electronically commutated motor rated for continuous duty.

E. Control:
   1. Furnish fan with on-board speed adjustment potentiometer for balancing.

F. Manufacturers: Subject to compliance with requirements, provide products by one of the following:
   1. Greenheck
   2. Cook
   3. Acme
   4. Twin City
   5. PennBarry

PART III - EXECUTION

3.01 INSPECTION:

A. General: Examine areas and conditions under which power and gravity ventilators are to be installed. Do not proceed with work until unsatisfactory conditions have been corrected.

3.02 INSTALLATION OF POWER VENTILATORS:

A. General: Except as otherwise indicated or specified, install power ventilators in accordance with manufacturer's installation instructions and recognized industry practices to insure that products serve the intended function.

B. Coordinate ventilator work with work of walls, roof and ceilings, as necessary for proper interfacing.

C. Ductwork: Refer to Division 23 section "Ductwork." Connect ducts to ventilators in accordance with manufacturer's installation instructions.

D. Electrical Wiring: Install electrical devices furnished by manufacturer but not specified to be factory-mounted.

E. Remove shipping bolts and temporary supports within ventilators. Adjust dampers for free operation.

F. Hang from or install on spring type vibration isolators, complete with appropriate mounting frame.

3.03 FIELD QUALITY CONTROL:

A. Testing: After installation ventilators has been completed, test each ventilator to demonstrate proper operation of unit at performance requirements specified. When possible, field correct malfunctioning units, then retest to demonstrate compliance. Replace units which cannot be satisfactorily corrected.

3.04 ADJUSTING AND CLEANING:

A. Cleaning: Clean factory-finished surfaces. Repair any marred or scratched surfaces with manufacturer's touch-up paint.

END OF SECTION 233423

SECTION 233600
AIR TERMINAL UNITS

PART 1 GENERAL

1.01 REFERENCE STANDARDS

A. ASCE 7 - Minimum Design Loads and Associated Criteria for Buildings and Other Structures; Most Recent Edition Cited by Referring Code or Reference Standard.

B. NFPA 90A - Standard for the Installation of Air-Conditioning and Ventilating Systems; 2024.

1.02 SECTION INCLUDES:

A. Furnish all labor, materials, equipment, tools and services required to fully complete all Terminal Unit work as is indicated on the drawings and/or specified herein including, but not limited to, the following described items.
   1. Variable Air Volume, single-duct air terminal units with electric coil.
   2. Variable Air Volume, single-duct air terminal units, cooling only.

1.03 ACTION SUBMITTALS

A. Product Data: For each type of the following products, including rated capacities, furnished specialties, sound-power ratings, and accessories.
   1. VAV Air terminal units.
   2. Electric Heating Coils

B. Shop Drawings: For air terminal units. Include plans, elevations, sections, details, and attachments to other work.
   1. Detail equipment assemblies and indicate dimensions, weights, loads, required clearances, method of field assembly, components, and location and size of each field connection.
   2. Computer generated capacity data for each coil. Certify coil capacities, pressure drops and selections procedures in accordance with ARI 410.

1.04 INFORMATIONAL SUBMITTALS

A. Coordination Drawings: Reflected ceiling plans, drawn to scale, on which the following items are shown and coordinated with each other, using input from Installers of the items involved:
   1. Ceiling suspension assembly members.
   2. Size and location of ceiling access doors.
   3. Ceiling-mounted items including lighting fixtures, diffusers, grilles, speakers, fire sprinklers, access panels, and special moldings.

B. Field quality-control reports.

1.05 CLOSEOUT SUBMITTALS

A. Operation and Maintenance Data: For air terminal units to include in operation, and maintenance manuals. In addition to items specified in Section 01 7823 "Operation and Maintenance Data," include the following:

1.06 QUALITY ASSURANCE

A. ASHRAE Compliance: Applicable requirements in ASHRAE 62.1, Section 5 - "Systems and Equipment" and Section 7 - "Construction and System Start-Up."

B. Product Options: Drawings and schedules indicate requirements of air terminals and are based on specific systems indicated. Other manufacturers' systems with equal performance characteristics may be considered. Refer to Division 1 Section "Substitutions."

C. NFPA Compliance: Install air terminals according to NFPA 90A, "Standard for the Installation of Air Conditioning and Ventilating Systems."

D. Airborne Noise:
   1. Comply with ANSI / AHRI 880 - Performance Rating of Air Terminals

PART 2 PRODUCTS

2.01 PERFORMANCE REQUIREMENTS

A. Structural Performance: Hangers and supports shall withstand the effects of gravity loads and stresses within limits and under conditions described in SMACNA's "HVAC Duct Construction Standards - Metal and Flexible".

2.02 VAV SINGLE-DUCT AIR TERMINAL UNITS

A. Manufacturers: Subject to compliance with requirements, provide products by one of the following:
   1. Titus
   2. Greenheck
   3. Price Industries.
   4. Krueger.

B. Configuration: Volume-damper assembly inside unit casing with control components inside a protective metal shroud.

C. Casing: 0.034-inch steel, single wall.
   1. Casing Lining: Adhesive attached, coated, fibrous-glass duct liner complying with ASTM C 1071, and having a maximum flame-spread index of 25 and a maximum smoke-developed index of 50, for both insulation and adhesive, when tested according to ASTM E 84.
      a. Lining thickness:
      b. 1/2-inch.
      c. Coat all cut and exposed edges of lining with 100% sealant.
   2. Air Inlet: Round stub connection for duct attachment.
   3. Air Outlet: S-slip and drive connections.
   4. Access: Removable panels for access to parts requiring service, adjustment, or maintenance; with airtight gasket.
   5. Access Door: Access door upstream of the reheat coil.
   6. Provide with factory fabricated and mounted sheet metal enclosure with removable front cover for housing field applied - installed controller.

D. Volume Damper: Galvanized steel with peripheral gasket and self-lubricating bearings.
   1. Maximum Damper Leakage:
      a. ARI 880 rated, 3 percent of nominal airflow at 3-inch wg inlet static pressure.
   2. Damper Position:
      a. Normally open.
   3. Extend shaft outside of casing for mounting to actuator.

E. Unit shall include multi point, center averaging, four quadrant sensor / flow control pickup.

F. Electric Reheat Coils
   1. Proportional, modulating electric coils shall be supplied and installed on the terminal by the terminal manufacturer. Coils shall be ETL listed. Coils shall be housed in an attenuator section integral with the terminal with element grid recessed from unit discharge a minimum of 5 inches (127 mm) to prevent damage to elements during shipping and installation. Elements shall be 80/20 nickel chrome, supported by ceramic isolators a maximum of 3.5 inches apart, staggered for maximum thermal transfer and element life, and balanced to ensure equal output per step. The integral control panel shall be housed in a NEMA 1 enclosure with hinged access door for access to all controls and safety devices.
   2. Electric coils shall contain a primary automatic reset thermal cutout, a secondary manual reset thermal cutout, proportional electronic airflow sensor for proof of flow, and line terminal block.
   3. The proportional electronic airflow sensor shall be totally independent of the duct static pressure and shall adjust the heater capacity according to the available airflow. The

heaters shall deliver maximum heating when needed with normal minimum airflow, reduce heating with lower than minimum airflow and stop heating with no airflow. Unit shall include an integral door interlock type disconnect switch which will not allow the access door to be opened while power is on. Non-interlocking type disconnects are not acceptable. All individual components shall be UL listed or recognized.

4. Heaters shall be equipped with a proportional SCR controller to modulate the heater load according to the temperature control signal. The electronic controller shall be compatible with the following input signals:
   a. Variable voltage signal 0-10 VDC
   b. Pulse width modulation AC or DC

G. Direct Digital Controls: See Section 25 5100 "Building Energy Management Temperature Control System - BMS".

2.03 HANGERS AND SUPPORTS

A. Hanger Rods for Noncorrosive Environments: Cadmium-plated steel rods and nuts.

B. Hanger Rods for Corrosive Environments: Electrogalvanized, all-thread rods or galvanized rods with threads painted with zinc-chromate primer after installation.

C. Steel Cables: Galvanized steel complying with ASTM A 603.

D. Steel Cable End Connections: Cadmium-plated steel assemblies with brackets, swivel, and bolts designed for duct hanger service; with an automatic-locking and clamping device.

E. Air Terminal Unit Attachments: Sheet metal screws, blind rivets, or self-tapping metal screws; compatible with duct materials.

F. Trapeze and Riser Supports: Steel shapes and plates for units with steel casings; aluminum for units with aluminum casings.

2.04 SOURCE QUALITY CONTROL

A. Factory Tests: Test assembled air terminal units according to ARI 880.
   1. Label each air terminal unit with plan number, nominal airflow, maximum and minimum factory-set airflows, and ARI certification seal.

PART 3 EXECUTION

3.01 INSTALLATION

A. Install air terminal units according to NFPA 90A, "Standard for the Installation of Air Conditioning and Ventilating Systems."

B. Install air terminal units level and plumb. Maintain sufficient clearance for normal service and maintenance.

C. Connect ductwork to air terminals according to Division 23 ductwork Sections.

D. Comply with SEI/ASCE 7 and with requirements for seismic-restraint devices in Section 23 0548 "Vibration and Seismic Controls for HVAC."

3.02 HANGER AND SUPPORT INSTALLATION

A. Comply with SMACNA's "HVAC Duct Construction Standards - Metal and Flexible," Chapter 5, "Hangers and Supports."

B. Building Attachments: Concrete inserts, powder-actuated fasteners, or structural-steel fasteners appropriate for construction materials to which hangers are being attached.
   1. Where practical, install concrete inserts before placing concrete.
   2. Install powder-actuated concrete fasteners after concrete is placed and completely cured.
   3. Use powder-actuated concrete fasteners for standard-weight aggregate concretes and for slabs more than 4 inches (101.6 mm) thick.
   4. Do not use powder-actuated concrete fasteners for lightweight-aggregate concretes and for slabs less than 4 inches (101.6 mm) thick.
   5. Do not use powder-actuated concrete fasteners for seismic restraints.

C. Hangers Exposed to View: Threaded rod and angle or channel supports.

D. Install upper attachments to structures. Select and size upper attachments with pull-out, tension, and shear capacities appropriate for supported loads and building materials where used.

3.03 CONNECTIONS

A. Install electrical connections adjacent to air terminal unit to allow service and maintenance.

B. Connect ducts to air terminal units according to Section 23 3113 "Metal Ducts.

3.04 IDENTIFICATION

A. Label each air terminal unit with plan number, nominal airflow, and maximum and minimum factory-set airflows. Comply with requirements in Section 230553 "Identification for HVAC Piping and Equipment" for equipment labels and warning signs and labels.

3.05 FIELD QUALITY CONTROL

A. Air terminal unit will be considered defective if it does not pass tests and inspections.

B. Prepare test and inspection reports.

C. Cleaning:
   1. After completing system installation, including outlet fittings and devices, inspect exposed finish. Remove burrs, dirt, and construction debris, and repair damaged finishes.

3.06 STARTUP SERVICE

A. Perform startup service.
   1. Complete installation and startup checks according to:
      a. Manufacturer's written instructions.
      b. Construction documents.
   2. Verify that inlet duct connections are as recommended by air terminal unit manufacturer to achieve proper performance.
   3. Verify that controls and control enclosure are accessible.
   4. Verify that control connections are complete.
   5. Verify that nameplate and identification tag are visible.
   6. Verify that controls respond to inputs as specified.

3.07 DEMONSTRATION

A. Train Owner's maintenance personnel to adjust, operate, and maintain air terminal units:
   1. Train Owner's maintenance personnel on procedures and schedules related to startup and shutdown, troubleshooting, servicing, and preventive maintenance.
   2. Review data in the maintenance manuals. Refer to Division 1 Section "Contract Closeout."
   3. Review data in the maintenance manuals. Refer to Division 1 Section "Operation and Maintenance Data."
   4. Schedule training with Owner, through Architect, with at least 7 days' advance notice.

END OF SECTION 233600

SECTION 233713
AIR OUTLETS AND INLETS

PART I - GENERAL

1.01 REFERENCE STANDARDS

A. ASTM B117 - Standard Practice for Operating Salt Spray (Fog) Apparatus; 2019.

B. ASTM D2794 - Standard Test Method for Resistance of Organic Coatings to the Effects of Rapid Deformation (Impact); 1993 (Reapproved 2024).

C. NFPA 90A - Standard for the Installation of Air-Conditioning and Ventilating Systems; 2024.

1.02 RELATED DOCUMENTS:

A. Drawings and general provisions of Contract, including General and Supplementary Conditions and Division 01 Specification sections, apply to work of this section.

1.03 SUMMARY:

A. Extent of air outlets and inlets work is indicated by drawings and schedules, and by requirements of this section.

B. Types of outlets and inlets required for project include the following:
   1. Ceiling air diffusers and grilles.
   2. Wall registers and grilles.
   3. Louvers

C. Refer to other Division 23 sections for ductwork and duct accessories required in conjunction with air outlets and inlets; not work of this section.

D. Refer to other Division 23 sections for balancing of air outlets and inlets; not work of this section.

E. Refer to other Division sections for louvers, not work of this section.

1.04 QUALITY ASSURANCE:

A. Manufacturer's Qualifications: Firms regularly engaged in manufacture of air outlets and inlets of types and capacities required, whose products have been in satisfactory use in similar service for not less than 5 years.

B. Installer's Qualifications: A firm with at least 3 years of successful installation experience on projects with metal ductwork systems work similar to that required for project.
   1. The Installer shall have a publicly registered bonding capacity of sufficient amount to cover this work and all other work in progress by the Contractor.
   2. All workmen on the project shall carry state licenses as journeymen or apprentice sheet metal workers with additional certification for welders.

1.05 SUBMITTALS:

A. Product Data: Submit manufacturer's technical product data for air outlets and inlets including the following:
   1. Schedule of air outlets and inlets indicating drawing designation, room location, number furnished, model number, size, and accessories furnished.
   2. Data sheet for each type of air outlet and inlet, and accessory furnished; indicating construction, finish, and mounting details.
   3. Performance data for each type of air outlet and inlet furnished, including aspiration ability, temperature and velocity traverses; throw and drop; and noise criteria ratings. Indicate selections on data.

B. Samples: 3 samples of each type of finish furnished.

C. Shop Drawings: Submit manufacturer's assembly-type shop drawing for each type of air outlet and inlet, indicating materials and methods of assembly of components.

D. Maintenance Data: Submit maintenance data, including cleaning instructions for finishes, and spare parts lists. Include this data, product data, and shop drawings in maintenance manuals; in accordance with requirements of General Conditions.

1.06 REFERENCES:

A. Codes and Standards:
1. ARI Compliance: Test and rate air outlets and inlets in accordance with ARI 650 "Standard for Air Outlets and Inlets".
2. ASHRAE Compliance: Test and rate air outlets and inlets in accordance with ASHRAE 70 "Method of Testing for Rating the Air Flow Performance of Outlets and Inlets".
3. AMCA Compliance: Test and rate louvers in accordance with AMCA 500 "Test Method for Louvers, Dampers and Shutters".
4. AMCA Seal: Provide louvers bearing AMCA Certified Rating Seal.
5. NFPA Compliance: Install air outlets and inlets in accordance with NFPA 90A "Standard for the Installation of Air Conditioning and Ventilating Systems".

1.07 PRODUCT DELIVERY, STORAGE AND HANDLING:

A. Deliver air outlets and inlets wrapped in factory-fabricated fiber-board type containers. Identify on outside of container type of outlet or inlet and location to be installed. Avoid crushing or bending and prevent dirt and debris from entering and settling in devices.

B. Store air outlets and inlets in original cartons and protect from weather and construction work traffic. Where possible, store indoors; when necessary to store outdoors, store above grade and enclose with waterproof wrapping.

PART II - PRODUCTS

2.01 GRILLES AND DIFFUSERS:

A. General: Except as otherwise indicated, provide manufacturer's standard ceiling air diffusers where shown; of size, shape, capacity and type indicated; constructed of materials and components as indicated, and as required for complete installation.

B. Performance: Provide ceiling air diffusers that have, as minimum, temperature and velocity traverses, throw and drop, and noise criteria ratings for each size device as listed in manufacturer's current data.

C. Ceiling Compatibility: Provide diffusers with border styles that are compatible with adjacent ceiling systems, and that are specifically manufactured to fit into ceiling module with accurate fit and adequate support. Refer to general construction drawings and specifications for types of ceiling systems which will contain each type of ceiling air diffuser.

D. Adjust all grilles and diffusers to fit neatly in the room ceiling pattern. Set final locations per architectural reflected ceiling plans.

E. Volume Control Dampers: Provide duct mounted dampers of the externally adjustable opposed blade type where more than one grille or register is on a common duct. Provide access to each damper adjustment.

F. Fire Dampers: Install at the diffusers, registers and grilles as indicated on drawings or required by code

G. Sound Level: The diffuser or grille generated noise shall not exceed the following sound power level curve at a point five feet away form the diffuser or grille.
1. Classrooms: NC 30-35
2. Commons Area: NC 35-40
3. Office Areas: NC 30-35
4. Storage: NC 35-40
5. Work Rooms: NC 35-40

H. Manufacturers: Subject to compliance with requirements, provide grilles and diffusers of one of the following:

1. Titus
2. Greenheck
3. Krueger
4. EH Price

I. Types: Provide grilles and diffusers of type, capacity, and with accessories and finishes as listed on grille and diffuser schedule and as specified herein.

J. Grilles and Diffusers:
1. Ceiling Supply Diffuser (S-1): Titus Omni, square face, round neck, four-way deflection, anti-smudge design, removable face panel, all steel construction, surface mount with rapid mounting frame, #26 white finish, size as indicated on drawings.
2. Sidewall Supply Grille (S-2): Titus 300RL steel, adjustable, double deflection blades, 3/4"maximum blade spacing, appropriate mounting frame, sponge rubber gasket, baked enamel finish, #26 white finish, size indicated on drawings.
3. Drum Louver (S-3): Titus DL,
   a. Construction: Outer borders shall be 1¼ inches wide and shall be constructed of heavy gauge extruded aluminum. Corners shall be assembled with full penetration resistance welds with a reinforcing steel patch for extra strength. Screw holes shall be countersunk for a neat appearance. Drum shall be constructed of heavy gauge extruded aluminum and shall rotate a minimum of 25° up and down from center line of the diffuser. Heavy extruded aluminum blades shall be individually adjustable.
   b. Finish: The grille finish shall be #26 white. The finish shall be an anodic acrylic paint, baked at 315°F for 30 minutes. The pencil hardness must be HB to H. The paint must pass a 100-hour ASTM B117 Corrosive Environments Salt Spray Test without creepage, blistering or deterioration of film. The paint must pass a 250-hour ASTM D870 Water Immersion Test. The paint must also pass the ASTM D2794 Reverse Impact Cracking Test with a 50-inch pound force applied.
   c. Sizes and mounting type as shown on the plans and outlet schedule.
4. High-Capacity Ventilation Module (S-4): Titus TVM-6
   a. Ventilation Modules shall have efficient air distribution through each outlet by use of interior baffles. The built-in diffusers be adjusted 30 ° up or down from their central position. Fins can be adjusted individually.
   b. The module shall have six drum louver outlets made of extruded aluminum.
   c. Neck: The rectangular inlets shall have a minimum of 4-inch depth available for duct connection.
   d. Finish: The grille finish shall be #26 white. The finish shall be an anodic acrylic paint, baked at 315°F for 30 minutes. The pencil hardness must be HB to H. The paint must pass a 100-hour ASTM B117 Corrosive Environments Salt Spray Test without creepage, blistering or deterioration of film. The paint must pass a 250-hour ASTM D870 Water Immersion Test. The paint must also pass the ASTM D2794 Reverse Impact Cracking Test with a 50-inch pound force applied.
   e. Provide optional internal insulation to reduce the noise level and reduce condensation.
5. Sidewall Return Grille (R-1): Titus 25RL. Aero-blade, ½’ spacing. Blades shall have a minimum gauge of 20 with a fixed deflection angle of 30°. Provide appropriate mounting frame sponge rubber gasket, #26 white finish Size as indicated on drawing.
6. Ceiling Transfer Grille (T-1): Titus 25RL. Aero-blade, ½’ spacing. Blades shall have a minimum gauge of 20 with a fixed deflection angle of 30°. Provide appropriate mounting frame sponge rubber gasket, #26 white finish Size as indicated on drawing.
7. Sidewall Transfer Grille (T-2): Titus 25RL. Aero-blade, ½’ spacing. Blades shall have a minimum gauge of 20 with a fixed deflection angle of 30°. Provide appropriate mounting frame sponge rubber gasket, #26 white finish Size as indicated on drawing.
8. Ceiling Exhaust Grille (E-1): Titus 25RL. Aero-blade, ½’ spacing. Blades shall have a minimum gauge of 20 with a fixed deflection angle of 30°. Provide appropriate mounting frame sponge rubber gasket, #26 white finish Size as indicated on drawing.

9. Sidewall Exhaust Grille (E-2): Titus 25RL. Aero-blade, ½’ spacing. Blades shall have a minimum gauge of 20 with a fixed deflection angle of 30°. Provide appropriate mounting frame sponge rubber gasket, #26 white finish Size as indicated on drawing.

PART III - EXECUTION

3.01 INSPECTION:

A. Examine areas and conditions under which air outlets and inlets are to be installed. Do not proceed with work until unsatisfactory conditions have been corrected.

3.02 INSTALLATION:

A. General: Install air outlets and inlets in accordance with manufacturer's written instructions and in accordance with recognized industry practices to insure that products serve intended function.

B. Coordinate with other work, including ductwork and duct accessories, as necessary to interface installation of air outlets and inlets with other work.

C. Locate ceiling air diffusers, registers, and grilles, as indicated on general construction "Reflected Ceiling Plans". Unless otherwise indicated, locate units in center of acoustical ceiling module.

D. Air Mixer: Install in field assembled type II plenum, see section 233100. Provide vertical and horizontal stiffeners, angles, etc. to create a rigid panel assembly. Install on continuous 6”x6” concrete curb.

END OF SECTION 233713

SECTION 237300
PACKAGED ROOFTOP UNITS

PART - GENERAL

1.01 RELATED DOCUMENTS:

A. Drawings and general provisions of Contract, including General and Supplementary Conditions and Division-1 Specification sections, apply to work of this section.

B. Division-23 General Mechanical Requirements, and General Pipes and Fittings sections apply to work of this section.

1.02 SUMMARY:

A. Extent of rooftop unit work is indicated on drawings, schedules, and by requirements of this section.

B. Types of packaged air-handling units specified in this section include the following:
   1. Rooftop unit.
   2. Makeup air units.

C. Refer to Division-26 sections for the following work.
   1. Power supply wiring from power source to power connection on unit. Include starters, disconnects, and required electrical devices, except where specified as furnished, or factory-installed.

1.03 QUALITY ASSURANCE:

A. Manufacturer's Qualifications: Firms regularly engaged in manufacture of packaged air-handling units with characteristics, sizes, and capacities required, whose products have been in satisfactory use in similar service for not less than 5 years.

B. Installer's Qualifications: A firm with at least 3 years of successful installation experience on projects with metal ductwork systems work similar to that required for project.

C. Fabricate and label refrigeration system to comply with ASHRAE 15, "Safety Code for Mechanical Refrigeration."

D. Energy Efficiency Ratio: Equal to or greater than prescribed by the adopted version of ASHRAE 90.1, "Energy Efficient Design of New Buildings except Low-Rise Residential Buildings."

E. Listing and Labeling: Provide electrically operated components specified in this Section that are listed and labeled.

1.04 SUBMITTALS:

A. Product Data: Submit manufacturer's technical product data for air handling units showing dimensions, weights, capacities, ratings, fan performance with operating point clearly indicated, motor electrical characteristics, gages and finishes of materials, and installation instructions.

B. Shop Drawings: Submit assembly-type shop drawings showing unit dimensions, weight loadings, required clearances, construction details, and field connection details. Detail mounting, securing, and flashing of roof curb to roof structure. Indicate coordinating requirements with roof membrane system.

C. Wiring Diagrams: Submit manufacturer's electrical requirements for power supply wiring to air handling units. Submit manufacturer's ladder-type wiring diagrams for interlock and control wiring. Clearly differentiate between portions of wiring that are factory-installed and portions to be field-installed.

D. Maintenance Data: Submit maintenance instructions, including instructions for lubrication, filter replacement, motor and drive replacement, and spare parts lists. Include this data, product data, shop drawings, and wiring diagrams in maintenance manuals; in accordance with requirements of Division 230900.

1.05 REFERENCES:

A. Codes and Standards:
1. AMCA Compliance: Test and rate air handling units in accordance with AMCA standards.
2. ARI Compliance: Test and rate air handling units in accordance with ARI 430 "Standard for Central-Station Air Handling Units", display certification symbol on units of certified models.
3. ASHRAE Compliance: Construct and install refrigerant coils in accordance with ASHRAE 15 "Safety Code for Mechanical Refrigeration".
4. NFPA Compliance: Provide air handling unit internal insulation having flame spread rating not over 25 and smoke developed rating no higher than 50; and complying with NFPA 90A "Standard for the Installation of Air Conditioning and Ventilating Systems".
5. NEC Compliance: Comply with National Electrical Code (((NFPA 70))) as applicable to installation and electrical connections of ancillary electrical components of air handling units.
6. International Building Code/International Mechanical Code/International Energy Conservation Code: Comply with all sections pertaining to mechanical work.

1.06 PRODUCT DELIVERY, STORAGE AND HANDLING:

A. Deliver air-conditioning units with factory-installed shipping skids and lifting lugs; pack components in factory-fabricated protective containers.

B. Handle air-handling units carefully to avoid damage to components, enclosures, and finish. Do not install damaged components; replace and return damaged components to air-handling unit manufacturer.

C. Store air-handling units in clean dry place and protect from weather and construction traffic. Where necessary to store outside, store above grade and enclosed with waterproof wrapping.

D. Comply with Manufacturer's rigging and installation instructions for unloading air handling units, and moving them to final location.

1.07 COORDINATION

A. Coordinate installation of roof curbs and roof penetrations with roofing contractor.

PART - PRODUCTS

2.01 ROOFTOP UNIT (RTU-1):

A. General Description
1. Packaged rooftop unit shall include compressors, evaporator coils, filters, supply fans, dampers, air-cooled condenser coils, condenser fans, gas heaters, exhaust fans, and unit controls.
2. Unit shall be factory assembled and tested including leak testing of the DX coils, pressure testing of the refrigeration circuit, and run testing of the completed unit. Run test report shall be supplied with the unit in the service compartment’s literature pocket.
3. Unit shall have decals and tags to indicate lifting and rigging, service areas and caution areas for safety and to assist service personnel.
4. Unit components shall be labeled, including refrigeration system components and electrical and controls components.
5. Estimated sound power levels (dB) shall be shown on the unit ratings sheet.
6. Installation, Operation and Maintenance manual shall be supplied within the unit.
7. Laminated color-coded wiring diagram shall match factory installed wiring and shall be affixed to the interior of the control compartment’s hinged access door.
8. Unit nameplate shall be provided in two locations on the unit, affixed to the exterior of the unit and affixed to the interior of the control compartment’s hinged access door.

B. Construction

1. All cabinet walls, access doors, and roof shall be fabricated of double wall, impact resistant, rigid polyurethane foam panels.
2. Unit insulation shall have a minimum thermal resistance R-value of 13. Foam insulation shall have a minimum density of 2 pounds/cubic foot and shall be tested in accordance with ASTM D1929-11 for a minimum flash ignition temperature of 610°F.
3. Unit construction shall be double wall with G90 galvanized interior and G60 painted exterior with a thermal break. Double wall construction with a thermal break prevents moisture accumulation on the insulation, provides a cleanable interior, prevents heat transfer through the panel, and prevents exterior condensation on the panel.
4. Unit shall be designed to reduce air leakage and infiltration through the cabinet. Cabinet leakage shall not exceed 1% of total airflow when tested at 3 times the minimum external static pressure provided in AHRIS standard 340/360. Panel deflection shall not exceed L/240 ratio at 125% of design static pressure, at a maximum 8 inches (203.2 mm) of positive or negative static pressure, to reduce air leakage. Deflection shall be measured at the midpoint of the panel height and width. Continuous sealing shall be included between panels and between access doors and openings to reduce air leakage. Piping and electrical conduit through cabinet panels shall include sealing to reduce air leakage.
5. Roof of the air tunnel shall be sloped to provide complete drainage. Cabinet shall have rain break overhangs above access doors. Roof Insulation: 2 inch (50.8 mm) fiberglass located above the 1 inch (25.4 mm) foam panel.
6. Unit shall be equipped with insulated, hinged doors or removable access panels to provide easy access to all major components. Doors and access panels shall be fabricated of 18 gauge galvanized G90 steel or painted galvannealed steel.
7. Supply Air blower assemblies: Blower assembly shall consist of an electric motor and direct-drive fans. Assembly shall be mounted on heavy gauge galvanized steel rails and further mounted on 1.125 inch (28.58 mm) thick neoprene vibration isolators. Blower motors shall be capable of continuous speed modulation and controlled by a VFD.
8. Exhaust Air blower assemblies: Blower assembly shall consist of an electric motor and a direct-drive fan. Assembly shall be mounted on heavy gauge galvanized steel rails and further mounted on 1.125 inch (28.58 mm) thick neoprene vibration isolators. Blower motor shall be capable of continuous speed modulation and controlled by a VFD.
9. Evaporator Coil: Evaporator coil shall be (silver) soldered or brazed into the compressed refrigerant system. Coil shall be a single circuit design. constructed of copper tubing, permanently bonded to aluminum fins and enclosed in a galvanized steel frame.
10. Control panel / connections: Units shall have an electrical control center where all high and low voltage connections are made. Control center shall be constructed to permit single-point high voltage power supply connections. RTU shall be equipped with a Unit Disconnect Switch.
11. Condensate drain pan: Drain Pan shall be an integral part of the unit whenever a cooling option is included. Pan shall be formed of welded austenitic stainless steel sheet material and provided with a welded stainless steel drain connection at the front for connection to a P trap. Drain pan shall be sloped in two directions to provide positive draining and drain connector shall be sealed at penetration through cabinet wall.
12. P trap: If the unit is equipped with a condensate drain pan, contractor shall provide, or fabricate, and install an appropriate P trap, in accordance with all local and area codes and Best Practices.
13. Reheat coil shall be an all-aluminum micro channel design with factory installed modulating hot gas reheat valve.
14. Indirect gas furnace
    a. Shall be ETL Certified as a component of the unit.
    b. Shall have an integral combustion gas blower.
    c. Shall be ETL Certified for installation downstream of a cooling coil.
    d. Shall have fault sensors to provide fault conditions to optional digital controller or building controls.

e. Shall have 4-pass tubular heat exchangers, constructed of type 409 stainless steel. Heat exchanger tubes shall be installed on the vest plate by means of swaged assembly, welded connections are not acceptable. Heat exchanger tubes shall be supported by a minimum of two fabricated assemblies that support the tubes and also permit expansion and contraction of the tubes.
f. Furnace control shall be High-Turndown 12:1 Modulating.
g. Shall be encased in a weather-tight metal housing with intake air vents. Large, metal lift-off door shall provide easy access to the enclosed vest plate, control circuitry, gas train, burner assembly and exhaust blower.
h. Shall have solid state controls permitting stand-alone operation or control by building controllers.

15. Packaged DX System: Unit shall have an integral compressor(s) and evaporator coil located within the weather-tight unit housing. Condenser coils shall be all-aluminum micro channel design appurtenant condenser fan assemblies shall be factory installed as integral subassemblies of the unit and mounted on the unit's exterior. Lead condenser fan(s) will have an electronically commutated (EC) motor that will modulate to maintain a head pressure set point.] Motors shall be UL Recognized and CSA Certified. The lead refrigerant compressor shall be inverter hermetic scroll-type. Additional compressor shall be single stage hermetic scroll-type paired in tandem with lead inverter compressor. Compressors shall be equipped with liquid line filter drier, electronic expansion valves (EEV) or thermostatic expansion valves (TXV) on non-inverter compressor circuits, manual reset high pressure and low pressure cutouts and all appurtenant sensors, service ports, leak detection sensors and safety devices. Compressed refrigerant system shall be fully charged with R-454B refrigerant. Compressors shall be mounted within an insulated access compartment and on a raised cabinet shelf to reduce sound and vibration. Each compressor shall be factory-equipped with an electric crankcase heater to boil off liquid refrigerant from the oil.
16. Condenser Fans: Fan blades must be constructed of aluminum or a composite material and have a geometry designed and documented to reduce sound and energy when compared to a traditional rectangular blade fan. Traditional rectangular blade fans are not allowed due to increased noise generated and increase power utilized. Condenser fan motors shall be three phase, external rotor, type 56 frame, open air over and shaft up. Each condenser fan motor shall have a vented frame, rated for continuous duty and be equipped with an automatic reset thermal protector. Lead condenser fan(s) will have an electronically commutated (EC) motor that will modulate to maintain a head pressure set point.] Motors shall be UL Recognized and CSA Certified. Single condenser fan running at max RPM and design static pressure shall not exceed an A-weighted sound power level of 75 db at free inlet/outlet test conditions.
17. Packaged DX Control and Diagnostics: The Packaged DX system shall be controlled by an onboard digital controller (DDC) that indicates both owner-supplied settings and fault conditions that may occur. The DDC shall be programmed to indicate the following faults:
    a. Global alarm condition (active when there is at least one alarm)
    b. Supply Air Proving alarm
    c. Dirty Filter Alarm
    d. Compressor Trip alarm
    e. Compressor Locked Out alarm
    f. Supply Air Temperature Low Limit alarm
        1) Sensor #1 Out of Range (outside air temperature)
        2) Sensor #2 Out of Range (supply air temperature)
        3) Sensor #3 Out of Range (cold coil leaving air temperature)
    g. Phase and brownout protection: Unit shall have a factory-installed phase monitor to detect electric supply phase loss and voltage brown-out conditions. Upon detection of a fault, the monitor shall disconnect supply voltage to all motors.
18. Motorized dampers / Intake Air, Exhaust Air, Motorized dampers of low leakage type shall be factory installed.

19. Curb Assembly: A curb assembly made of 14 gauge galvanized steel shall be provided by the factory for assembly and installation as part of this division. The curb assembly shall provide perimeter support of the entire unit and shall have duct adapter(s) for supply air and return air. Curb assembly shall enclose the underside of the unit and shall be sized to fit into a recess in the bottom of the unit. Contractor shall be responsible for coordinating with roofing contractor to ensure curb unit is properly flashed to provide protection against weather/moisture penetration. Contractor shall provide and install appropriate insulation for the curb assembly.

C. BLOWER
1. Blower section construction, Supply Air: direct drive motor and blower shall be assembled on a 14 gauge galvanized steel platform and shall be equipped with 1.125 inch (28.58 mm) thick neoprene vibration isolation devices.
2. Blower assemblies: Shall be statically and dynamically balanced and designed for continuous operation at maximum rated fan speed and horsepower.
3. Fan: Direct drive, airfoil plenum fan with aluminum wheel statically and dynamically balanced. Prop or belt-drive fan not acceptable due to low static capabilities.
4. Blades: Welded aluminum blades only.
5. Blower section motor source quality control: Blower performance shall be factory tested for flow rate, pressure, power, air density, rotation speed and efficiency. Ratings are to be established in accordance with AMCA 210, "Laboratory Methods of Testing Fans for Rating"

D. MOTORS
1. General: Blower motors greater than 1/2 horsepower shall be "NEMA Premium" unless otherwise indicated. Compliance with EPAct minimum energy-efficiency standards for single speed ODP and TE enclosures is not acceptable. Motors shall be heavy-duty, permanently lubricated type to match the fan load and furnished at the specified voltage, phase and enclosure.
2. Motors shall be 60 cycle, 3 phase 460 volts.

E. UNIT CONTROLS
1. The unit shall be constructed so that it can function as a stand-alone heating and cooling system controlled by factory-supplied controllers, thermostats and sensors or it can be operated as a heating and cooling system controlled by a Building Management System (BMS). This unit shall be controlled by a factory-installed microprocessor programmable controller (DDC) that is connected to various optional sensors.
2. Unit shall incorporate a DDC controller with integral LCD screen that provides text readouts of status. DDC controller shall have a built-in keypad to permit operator to access read-out screens without the use of ancillary equipment, devices or software. DDC controllers that require the use of equipment or software that is not factory-installed in the unit are not acceptable. Alarm readouts consisting of flashing light codes are not acceptable. Owner-specified ventilating conditions can be input by means of pushbuttons.
3. Unit supply fan shall be configured for duct pressure by factory.
4. Unit exhaust fan shall be configured for building pressure by factory.
5. Outside Air / Return Air damper control shall be field adjustable two-position.
6. Economizer control shall be temperature / enthalpy.
7. Operating protocol: The DDC shall be factory-programmed for BACNetIP.
8. Variable Frequency Drive (VFD): unit shall have factory installed variable frequency drive for modulation of the supply and exhaust air blower assemblies. The VFD shall be factory-programmed for unit-specific requirements and shall not require additional field programming to operate.
9. Airflow monitoring required in the outdoor airstreams.

F. FILTERS
1. MERV 8 and MERV 13 disposable pleated filters shall be provided in the supply final air stream.

G. Roof Curb
   1. Curbs shall to be fully gasketed between the curb top and unit bottom with the curb providing full perimeter support, cross structure support and air seal for the unit. Curb gasket shall be furnished within the control compartment of the rooftop unit to be mounted on the curb immediately before mounting of the rooftop unit.
   2. Solid bottom curb shall be factory assembled and fully lined with 1-inch neoprene coated fiberglass insulation and include a wood nailer strip. Curb shall be adjustable to allow for sloped roof applications.
   3. Final curb height shall provide a minim of 14” above the finished roof. All associated penetrations shall be a minimum of 18” away from the roof curb.
   4. Void spaces in the curb and under the unit shall be filled with insulation having an R-value matching that of the associated roofing.

H. Accessories
   1. Unit shall be provided with a smoke detector sensing the return air of the unit wired to shut off the unit’s control circuit.
   2. Refrigerant leak detectors shall be located in the supply air tunnel and compressor compartment and wired to shut off the unit’s control circuit.
      a. Warranty
   3. Provide a full parts warranty for one year from start-up or 18 months from shipment, whichever occurs first.
   4. Provide five year extended warranty for compressors including materials only.
   5. Provide five year limited warranty for heat exchanger including materials only.

I. Extra Materials
   1. Provide one set of filters.
      a. B. Furnish one complete set per applicable motor of fan motor drive belts.

J. Manufacturer
   1. Greenheck
   2. Aaon
      a. Trane
      b. Carrier
      c. Daikin

2.02 MAKE UP AIR UNITS:

A. General

2.03 REFERENCE STANDARDS

A. AMCA 210 - Laboratory Methods of Testing Fans for Certified Aerodynamic Performance Rating; 2016, with Errata (2018).

B. ASTM D1929 - Standard Test Method for Determining Ignition Temperature of Plastics; 2023.

C. NFPA 90A - Standard for the Installation of Air-Conditioning and Ventilating Systems; 2024.

D. NFPA 90B - Standard for the Installation of Warm Air Heating and Air-Conditioning Systems; 2024.

E. UL 181 - Standard for Factory-Made Air Ducts and Air Connectors; Current Edition, Including All Revisions.
   1. Outdoor air handling unit shall include filters, supply fans, dampers, evaporative cooling section, gas heaters, and unit controls.
   2. Unit shall be factory assembled and tested and run testing of the completed unit. Run test report shall be supplied with the unit in the service compartment’s literature pocket.
      a. Unit shall have decals and tags to indicate lifting and rigging, service areas and caution areas for safety and to assist service personnel.
   3. Unit components shall be labeled, including electrical and controls components.
   4. Estimated sound power levels (dB) shall be shown on the unit ratings sheet.

5. Installation, Operation, and Maintenance manual shall be supplied within the unit.
6. Laminated color-coded wiring diagram shall match factory installed wiring and shall be affixed to the interior of the control compartment's hinged access door.
7. Unit nameplate shall be provided in two locations on the unit, affixed to the exterior of the unit and affixed to the interior of the control compartment's hinged access door.

F. CABINET
1. Materials: Formed, double wall insulated metal cabinet, fabricated to permit access to internal components for maintenance.
   a. Outside casing: 18 gauge, galvanized (G90) steel meeting ASTM A653 for components that do not receive a painted finish. Pre-painted components as supplied by the factory shall have polyester urethane paint on 18 gauge G60 galvanized steel. Base rail is 12 gauge, galvazined (G90) steel.
   b. Internal Assemblies: 24 gauge galvanized (G90) steel except for motor supports which shall be minimum 14 gauge galvanized (G90) steel.
2. Comply with NFPA 90A and NFPA 90B and erosion requirements of UL 181.
   a. Materials: Fiberglass insulation. If insulation other than fiberglass is used, it must also meet the Fire Hazard Classification shown below.
      1) Thickness: 1 inch (25.4 mm)
      2) Fire Hazard Classification: Maximum flame spread of 25 and smoke developed of 50, when tested in accordance with ASTM C 411.
      3) Location and application: Floor of each unit shall be insulated with either one half inch thick or 1 inch (25.4 mm) thick rigid fiberglass insulation, covered on one surface with integral aluminum foil.
3. Access panels: Unit shall be equipped with hinged access panels to provide easy access to all major components.
4. Supply Air blower assembly: Blower assembly consists of an electric motor and a belt driven, double width, double inlet forward curve blower. Assembly shall be mounted on heavy gauge galvanized rails and further mounted on minimum 1.125 inch (28.58 mm) thick neoprene vibration isolators.
5. Control panel / connections: Unit shall have an electrical control center where all high and low voltage connections are made. Control center shall be constructed to permit single-point high voltage power supply connections.
6. Indirect Gas-Fired Furnace:
   a. Shall be ETL Certified as a component of the unit.
   b. Shall have an integral combustion gas blower.
   c. Shall be ETL Certified for installation downstream of a cooling coil.
   d. Shall have fault sensors to provide fault conditions to optional digital controller or building controls.
   e. Shall have 4-pass tubular heat exchangers, constructed of type 409 stainless steel. Heat exchanger tubes shall be installed on the vest plate by means of swaged assembly, welded connections are not acceptable. Heat exchanger tubes shall be supported by a minimum of two fabricated assemblies that support the tubes and also permit expansion and contraction of the tubes.
   f. Shall be encased in a weather-tight metal housing with intake air vents. Large, metal lift-off or hinged door shall provide easy access to the enclosed vest plate, control circuitry, gas train, burner assembly and exhaust blower.
   g. Shall include a kit for Outdoor mounting with Standard venting.
7. Condensate drain pan: Drain Pan shall be an integral part of the MAU whenever a cooling option is included. Pan shall be formed of welded austenitic stainless steel sheet material and provided with a welded stainless steel drain connection at the front for connection to a P trap. Drain pan shall be sloped in two directions to provide positive draining and drain connector shall be sealed at penetration through cabinet wall.
8. P trap: If the unit is equipped with a condensate drain pan, contractor shall provide, or fabricate, and install an appropriate P trap, in accordance with all local and area codes

and Best Practices.

9. Evaporative Cooling Module: Media holder and sump pan shall be fabricated of stainless steel and shall use GLASdek media. Gutter and sump shall be sized to supply the system with enough water to operate at its maximum flow rate and not overflow when the system is shut down. Cooling module shall be equipped with auto drain flush.
10. Motorized Recirculating Air Damper designed to permit 100% recirculation of exhaust air shall be factory installed. Damper shall be controlled by Building Pressure.
11. Curb Assembly: A curb assembly made of 14 gauge galvanized steel shall be provided by the factory for assembly and installation as part of this division. The curb assembly shall provide perimeter support of the entire unit and shall have duct adapters for supply and return air. Curb assembly shall enclose the underside of the unit and shall be sized to fit into a recess in the bottom of the unit. Contractor shall be responsible for coordinating with roofing contractor to ensure curb unit is properly flashed to provide protection against weather/moisture penetration. Contractor shall provide and install appropriate insulation for the curb assembly.

G. BLOWER
1. Blower section construction, Supply Air: Belt drive motor and blower shall be assembled onto a minimum 14 gauge galvanized steel platform and must have neoprene vibration isolation devices, minimum of 1 - 1/8 inches (3.18 mm) thick.
2. Blower assemblies: Shall be statically and dynamically balanced and designed for continuous operation at maximum rated fan speed and horsepower.
3. Centrifugal blower housing: Formed and reinforced steel panels to make curved scroll housing with shaped cutoff.
4. Forward curved blower (fan) wheels: Galvanized or aluminum construction with inlet flange and shallow blades curved forward in direction of airflow. Mechanically attached to shaft with set screws.
5. Blower section motor source quality control: Blower performance shall be factory tested for flow rate, pressure, power, air density, rotation speed and efficiency. Ratings are to be established in accordance with AMCA 210, "Laboratory Methods of Testing Fans for Rating".

H. MOTORS
1. General: Blower motors greater than .75 horsepower shall be "NEMA Premium" unless otherwise indicated. Compliance with EPAct minimum energy-efficiency standards for single speed ODP and TE enclosures is not acceptable. Motors shall be heavy-duty, permanently lubricated type to match the fan load and furnished at the specified voltage, phase and enclosure. Drives shall be sized for a minimum of 150% of driven horsepower and pulleys shall be fully machined cast-type, keyed and fully secured to the fan wheel and motor shafts. Electric motors of ten horsepower or less shall be supplied with an adjustable drive pulley. Comply with requirements in Division 23 05 13, matched with fan load.
2. Motors shall be 60 cycle, 3 phase, 460 volt.

I. UNIT CONTROLS
1. The unit shall be constructed so that it can function as a stand-alone heating and cooling system controlled by factory-supplied controllers, thermostats and sensors or it can be operated as a heating and cooling system controlled by a Building Management System (BMS) through a BACnet-IP interface.
2. Variable Frequency Drive (VFD): Unit shall have factory installed variable frequency drive for modulation of the supply air blower assembly. The VFD shall be factory-programmed for unit-specific requirements and shall not require additional field programming to operate.
3. Sensors to be provided with the unit include:
    a. Heating Inlet Air Sensor
    b. Cooling Inlet Air Sensor
    c. Dirty Filter Sensor

J. FILTERS
   1. Unit shall have 2" thick MERV 13 disposable pleated filters located in the outdoor air intake and shall be accessible from the exterior of the unit.

K. Roof Curb
   1. Curbs shall to be fully gasketed between the curb top and unit bottom with the curb providing full perimeter support, cross structure support and air seal for the unit. Curb gasket shall be furnished within the control compartment of the rooftop unit to be mounted on the curb immediately before mounting of the rooftop unit.
   2. Solid bottom curb shall be factory assembled and fully lined with 1-inch neoprene coated fiberglass insulation and include a wood nailer strip. Curb shall be adjustable to allow for sloped roof applications.
   3. Final curb height shall provide a minim of 14” above the finished roof. All associated penetrations shall be a minimum of 18” away from the roof curb.
   4. Void spaces in the curb and under the unit shall be filled with insulation having an R-value matching that of the associated roofing.

L. Accessories
   1. Unit shall be provided with a smoke detector sensing the return air of the unit, wired to shut off the unit’s control circuit.

M. Warranty
   1. Provide a full parts warranty for one year from start-up or 18 months from shipment, whichever occurs first.
   2. Provide five year limited warranty for heat exchanger including materials only.

N. Extra Materials
   1. Provide one set of filters.
   2. Furnish one complete set per applicable motor of fan motor drive belts.

O. MANUFACTURER
   1. Greenheck
   2. Aaon
   3. Trane
   4. Carrier
   5. Daikin

PART - EXECUTION

3.01 INSPECTION:

A. Examine areas and conditions under which air-handling units are to be installed. Do not proceed with work until unsatisfactory conditions have been corrected in manner acceptable to Installer.

3.02 INSTALLATION OF PACKAGED ROOFTOP UNIT AND MAKE UP AIR UNITS:

A. General: Install air-handling units where indicated, in accordance with equipment manufacturer's published installation instructions, and with recognized industry practices, to ensure that units comply with requirements and serve intended purposes.

B. Coordination: Coordinate with other work, including ductwork, floor construction, roof decking, piping, and electrical as necessary to interface installation of air-handling units with other work.

C. Access: Provide access space around air handling units for service as indicated, but in no case less than that recommended by manufacturer.

D. Mounting: Mount air conditioning units on the 36” high curb, in accordance with manufacturer's instructions.

E. Electrical Wiring: Install electrical devices furnished by manufacturer but not specified to be factory-mounted. Furnish copy of manufacturer's wiring diagram submittal to Electrical Installer.

1. Verify that electrical wiring installation is in accordance with manufacturer's submittal and installation requirements of Division-16 sections. Do not proceed with equipment start-up until wiring installation is acceptable to equipment installer.

F. Duct Connections: Refer to Division-23 Air Distribution sections. Provide ductwork, accessories, and flexible connections as indicated.

G. Grounding: Provide positive equipment ground for air-handling unit components.

H. Coil Condensate Drain Trap: Provide coil condensate drain trap of proper size and depth for each side of the rooftop unit coil condensate drain pan.

3.03 FIELD QUALITY CONTROL:

A. Testing: Upon completion of installation of air-handling units, start-up and operate equipment to demonstrate capability and compliance with requirements. Field correct malfunctioning units, then retest to demonstrate compliance.

B. If specified conditions cannot be obtained due to deficiencies in equipment performance or improper installation or workmanship, the Mechanical Contractor and his subcontractors shall make any changes necessary to obtain the specified conditions.

3.04 EXTRA STOCK:

A. Provide one complete extra set of filters for each air handling unit. Install new filters at completion of air handling system work, and prior to testing, adjusting, and balancing work. Obtain receipt from Owner that new filters have been installed.

END OF SECTION 237300

SECTION 237350
EVAPORATIVE COOLING

PART 1 - GENERAL

1.01 REFERENCE STANDARDS

A. NFPA 90A - Standard for the Installation of Air-Conditioning and Ventilating Systems; 2024.

1.02 RELATED DOCUMENTS:

1.03 DRAWINGS AND GENERAL PROVISIONS OF CONTRACT, INCLUDING GENERAL AND SUPPLEMENTARY CONDITIONS AND DIVISION-1 SPECIFICATION SECTIONS, APPLY TO WORK OF THIS SECTION.

1.04 SUMMARY:

1.05 PROVIDE COMPLETE EVAPORATIVE COOLERS AS WELL AS EVAPORATIVE COOLING MODULES TO ADD TO THE EXISTING MAKE UP AIR UNITS, ALL DESIGNED AND MANUFACTURED FOR OUTDOOR INSTALLATION.

1.06 REFER TO DIVISION-26 SECTIONS FOR THE FOLLOWING WORK; NOT WORK OF THIS SECTION.

A. Power supply wiring from power source to power connection on unit. Include required electrical devices, except where specified as furnished, or factory-installed by manufacturer.

1.07 PROVIDE THE FOLLOWING ELECTRICAL WORK AS WORK OF THIS SECTION, COMPLYING WITH REQUIREMENTS OF DIVISION-26 SECTIONS:

A. Starters and Disconnects.

1.08 QUALITY ASSURANCE:

1.09 MANUFACTURER'S QUALIFICATIONS: FIRMS REGULARLY ENGAGED IN MANUFACTURE OF PACKAGED HEATING AND VENTILATING UNITS WITH CHARACTERISTICS, SIZES, AND CAPACITIES REQUIRED, WHOSE PRODUCTS HAVE BEEN IN SATISFACTORY USE IN SIMILAR SERVICE FOR NOT LESS THAN 5 YEARS.

1.10 INSTALLER'S QUALIFICATIONS: A FIRM WITH AT LEAST 3 YEARS OF SUCCESSFUL INSTALLATION EXPERIENCE ON PROJECTS WITH METAL DUCTWORK SYSTEMS WORK SIMILAR TO THAT REQUIRED FOR PROJECT.

A. The Installer shall have a publicly registered bonding capacity of sufficient amount to cover this work and all other work in progress by the contractor.

B. All workmen on the project shall carry state licenses as journeymen or apprentice sheet metal workers with additional certification for welders.

1.11 SUBMITTALS:

1.12 PRODUCT DATA: SUBMIT MANUFACTURER'S TECHNICAL PRODUCT DATA FOR HEATING AND VENTILATING UNITS SHOWING DIMENSIONS, WEIGHTS, CAPACITIES, RATINGS, FAN PERFORMANCE WITH OPERATING POINT CLEARLY INDICATED, MOTOR ELECTRICAL CHARACTERISTICS, GAGES AND FINISHES OF MATERIALS, AND INSTALLATION INSTRUCTIONS.

1.13 SHOP DRAWINGS: SUBMIT ASSEMBLY-TYPE SHOP DRAWINGS SHOWING UNIT DIMENSIONS, WEIGHT LOADINGS, REQUIRED CLEARANCES, CONSTRUCTION DETAILS, AND FIELD CONNECTION DETAILS.

1.14 WIRING DIAGRAMS: SUBMIT MANUFACTURER'S ELECTRICAL REQUIREMENTS FOR POWER SUPPLY WIRING TO HEATING AND VENTILATING UNITS. SUBMIT MANUFACTURER'S LADDER-TYPE WIRING DIAGRAMS FOR INTERLOCK AND CONTROL WIRING. CLEARLY DIFFERENTIATE BETWEEN PORTIONS OF WIRING THAT ARE FACTORY-INSTALLED AND PORTIONS TO BE FIELD-INSTALLED.

1.15 MAINTENANCE DATA: SUBMIT MAINTENANCE INSTRUCTIONS, INCLUDING INSTRUCTIONS FOR LUBRICATION, FILTER REPLACEMENT, MOTOR AND DRIVE REPLACEMENT, AND SPARE PARTS LISTS. INCLUDE THIS DATA, PRODUCT DATA, SHOP DRAWINGS, AND WIRING DIAGRAMS IN MAINTENANCE MANUALS.

A. REFERENCES:

1.16 CODES AND STANDARDS:

A. American National Standards Institute (ANSI):

1.17 AMERICAN SOCIETY FOR TESTING MATERIALS (ASTM):

A. Standard A653/653M; Standard Specification for Steel Sheet, Zinc-Coated (Galvanized) or Zinc-Iron Alloy-Coated (Galvannealed) by the Hot Dip Process.

1.18 ETL TESTING LABORATORIES, INC. (ETL):

A. Requirements applicable to product labeling and listing in the Directory of ETL Listed Products.

1.19 FACTORY MUTUAL INSURANCE (FM):

1.20 NATIONAL ELECTRICAL MANUFACTURERS ASSOCIATION (NEMA):

A. Standard 250; Enclosures for Electrical Equipment

1.21 NATIONAL FIRE PROTECTION ASSOCIATION (NFPA):

A. Article 70; National Electric Code

B. Article 90A; Installation of Air Conditioning and Ventilating Systems

1.22 NATIONAL ROOFING CONTRACTORS ASSOCIATION (NRCA):

A. The NRCA Roofing and Waterproofing Manual, Second Edition

1.23 OCCUPATIONAL SAFETY AND HEALTH ADMINISTRATION (OSHA):

1.24 UNDERWRITERS LABORATORIES, INC. (UL):

A. Standard UL916 Energy Management Equipment

B. Standard UL873 Temperature Indicating & Regulating Equipment

C. PRODUCT DELIVERY, STORAGE AND HANDLING:

1.25 DELIVER EVAPORATIVE COOLERS WITH FACTORY-INSTALLED SHIPPING SKIDS AND LIFTING LUGS; PACK COMPONENTS IN FACTORY-FABRICATED PROTECTIVE CONTAINERS.

1.26 HANDLE EVAPORATIVE COOLERS CAREFULLY TO AVOID DAMAGE TO COMPONENTS, ENCLOSURES, AND FINISH. DO NOT INSTALL DAMAGED COMPONENTS; REPLACE AND RETURN DAMAGED COMPONENTS TO AIR-HANDLING UNIT MANUFACTURER.

1.27 STORE EVAPORATIVE COOLERS IN CLEAN DRY PLACE AND PROTECT FROM WEATHER AND CONSTRUCTION TRAFFIC. WHERE NECESSARY TO STORE OUTSIDE, STORE ABOVE GRADE AND ENCLOSED WITH WATERPROOF WRAPPING.

1.28 COMPLY WITH MANUFACTURER'S RIGGING AND INSTALLATION INSTRUCTIONS FOR UNLOADING EVAPORATIVE COOLERS AND EVAPORATIVE COOLING MODULES, AND MOVING THEM TO FINAL LOCATION.

A. WARRANTY

1.29 THE PRODUCT SHALL HAVE A MANUFACTURER'S LIMITED WARRANTY OF AT LEAST 12 MONTHS, SUBJECT TO THE MANUFACTURER'S STANDARD WARRANTY LIMITATIONS.

A. MAINTENANCE SERVICE

1.30 PROVIDE SERVICE AND MAINTENANCE FOR EACH EVAPORATIVE COOLERS AND EVAPORATIVE COOLING MODULES FOR ONE YEAR FROM DATE OF SUBSTANTIAL COMPLETION.

A. EXTRA MATERIALS

1.31 FURNISH EXTRA MATERIALS DESCRIBED BELOW THAT MATCH PRODUCTS INSTALLED AND THAT ARE PACKAGED WITH PROTECTIVE COVERING FOR STORAGE AND IDENTIFIED WITH LABELS DESCRIBING CONTENTS.

A. One set of Spare Belts per evaporative cooler.

PART 2 - PRODUCTS

2.01 MANUFACTURERS

2.02 AVAILABLE MANUFACTURERS: SUBJECT TO COMPLIANCE WITH SPECIFICATIONS CONTAINED WITHIN THIS DOCUMENT, MANUFACTURERS OFFERING PRODUCTS THAT MAY BE INCORPORATED INTO THE WORK INCLUDE, BUT ARE NOT LIMITED TO:

A. Evaporative Coolers
   1. Champion
   2. Arctic Air
   3. Essick

B. MANUFACTURED UNITS

2.03 EVAPORATIVE COOLERS

A. Complete factory assembled wired and tested unit, double inlet unit, constructed of heavy gauge galvanized steel, removable panels, electrostatically applied, polyester resin powder coating, thermoplastic water reservoir, 12” ridge Munters media non-corrosive PVC distribution system, double wide, double inlet, statically and dynamically balanced centrifugal belt drive fan with adjustable sheaves. Thermally protected high torque motor, circulating pump, make up water float constructed of brass and stainless steel, bleed off valve. Inlet mesh screen.

PART 3 EXECUTION

3.01 INSTALLATION

3.02 INSTALL EQUIPMENT IN STRICT ACCORDANCE WITH MANUFACTURER'S INSTRUCTIONS AND IN ACCORDANCE WITH APPLICABLE GOVERNMENTAL REGULATIONS BY A CONTRACTOR QUALIFIED IN THE INSTALLATION OF THE MANUFACTURER'S PRODUCT.

3.03 INSTALL PER NFPA 90A.

3.04 UNITS WHICH ARE SHIPPED IN MULTIPLE SECTIONS SHALL BE ASSEMBLED ON THE JOB SITE BY THE INSTALLING CONTRACTOR. ASSEMBLY INCLUDES CAULKING ALL SEAMS WEATHER TIGHT AND EXTENDING ELECTRICAL POWER AND NETWORK CONTROL WIRES TO THE TERMINALS PROVIDED, RECONNECTING THE MOTOR AND CONTROL WIRING BETWEEN SECTIONS TO CREATE A COMPLETE AND OPERABLE INSTALLATION (PER AIR HANDLER MANUFACTURER'S RECOMMENDATIONS).

3.05 CONTRACTOR SHALL EXTEND PRESSURE SENSING TUBES TO INSIDE AND TO OUTSIDE OF BUILDING AS RECOMMENDED BY THE AIR HANDLER MANUFACTURER.

3.06 FURNISH DIVISION 16 (ELECTRICAL) CONTRACTOR WITH FIELD WIRING DIAGRAM AND ELECTRICAL DATA TO PERMIT POWER WIRING CONNECTIONS TO THE UNIT.

3.07 INSTALLATION CONTRACTOR IS TO PROVIDE EQUIPMENT CHECK, TEST AND COMMISSIONING IN STRICT ACCORDANCE WITH MANUFACTURER'S INSTRUCTIONS.

3.08 PROVIDE THE OWNER'S OPERATING PERSONNEL WITH INSTRUCTION ON PROPER USE OF THE AIR HANDLER AND CONTROLS.

3.09 CONTRACTOR SHALL LEVEL THE ROOF CURB AND INSTALL A CANT STRIP AND WOOD NAILER PER APPLICABLE DETAILS ON THE PLANS.

END OF SECTION 237350

SECTION 238300
GAS FIRED HEATING SYSTEMS

PART I – GENERAL

1.01 RELATED DOCUMENTS:

A. Drawings and general provisions of the contract, including General and Supplementary Conditions and Division 1 Specification sections apply to work of this section.

B. All pertinent sections of Section 230000 - General Mechanical Requirements are a part of the work described in this section.

1.02 SUMMARY:

A. Includes but not limited to:
   1. Natural gas fired unit heaters

1.03 QUALITY ASSURANCE:

A. Manufacturer's Qualifications: Firms regularly engaged in manufacture of Gas Fired Heating systems with characteristics, sizes, and capacities required, whose products have been in satisfactory use in similar service for not less than 5 years.
   1. Installer's Qualifications: A firm with at least 3 years of successful installation experience on projects with radiant heating systems.

B. The total heating system shall be design certified by the American Gas Association, and each burner shall be affixed with a nameplate that bears the seal of the American Gas Association.

1.04 PRODUCT DELIVERY, STORAGE, AND HANDLING:

A. Store radiant heater components in a clean dry place. Protect from weather, dirt, fumes, water, and construction debris, and physical damage.

1.05 SUBMITTALS:

A. Product Data: Submit manufacturer's technical product data for fuel fired heating systems showing dimensions, weights, ratings, fan performance, motor electrical characteristics, and finishes of materials, and installation instructions.

B. Shop Drawings: Submit assembly-type shop drawings showing unit dimensions, weight loadings, required clearances, construction details, and field connection details.
   1. Wiring Diagrams: Submit manufacturer's electrical requirements for power supply wiring to radiant heating systems. Submit manufacturer's ladder-type wiring diagrams for interlock and control wiring. Clearly differentiate between portions of wiring that are factory-installed and portions to be field-installed.
   2. Maintenance Data: Submit maintenance instructions, including instructions for lubrication, and spare parts lists. Include this data, product data, shop drawings, and wiring diagrams in maintenance manuals; in accordance with requirements of Division 23.

PART II – PRODUCTS

2.01 GAS FIRED UNIT HEATERS (GUH-1, 2, & 3):

A. High Efficiency natural gas-fired unit heaters with separated combustion, axial fan, power vented high efficiency.

B. The unit input capacity shall be as listed on the plans. The output capacity shall be a minimum of 80% of the input based on steady-state thermal efficiency as certified by the American Gas Association (A.G.A.)

C. Size and capacity as scheduled on the drawings.

D. Casing: Casing shall be 22 gauge cold rolled steel draw-formed with a baked on enamel finish, aesthetically designed with rounded corners, and fitted to eliminate exposed fasteners. Casing shall also include a hinged bottom panel for easy access to the burner compartment. Horizontal air deflector louvers shall be provided to aid in controlling the discharge air pattern

E. Burner: Burner material shall be aluminized steel with non-clogging, slotted ports designed for good lighting characteristics without noise of extinction.

F. Heat Exchanger: 20 gauge aluminized steel. Heat exchanger shall be welded with contoured stress-free tubes.

G. Venting: The units shall have a factory mounted and wired integral power exhauster directly connected to the unit collector box assembly. The unit shall also include a factory mounted and wired safety pressure switch designed to prevent pilot and main burner ignition until positive venting has been proved. Units shall be designed for single vent connection.

H. Controls: Shall be factory wired and tested microprocessor based with the following features and safeties: hot surface ignition system, redundant gas control valves, with on-off knob or switch, multi speed combustion induction fan, combustion fan airflow proving switch, manual reset flame rollout safety switch, limit controls, wiring junction box, control box, solid state fan controls, limit controls, transformer, etc.

I. Motor and Propeller Fan: Each unit heater shall have a single motor and propeller. Motor shall be totally enclosed with thermal overload protection (single phase only). Propeller shall be statically balanced and shall be equipped with a safety fan guard.

J. Manufacturer
1. Modine
2. Reznor
3. Trane
4. Sterling

PART III - EXECUTION

3.01 INSPECTION:

A. Examine areas and conditions under which gas fired heating systems are to be installed. Do not proceed with work until unsatisfactory conditions have been corrected in manner acceptable to Installer.

3.02 INSTALLATION OF GAS FIRED UNIT HEATERS:

A. General: Install gas fired unit heaters as indicated and in accordance with manufacturer's published installation instructions. Mount such that tubing slopes or run level per manufacturers requirements.

B. Provide and install all low voltage (below 120 volt) control wiring and accessories complete, as specified.

C. Power wiring by electrical not work of this division.

D. Extend condensate drain piping from vacuum pump and combustion chamber to an approved drainage fixture through the use of no less than 3/4" copper piping.

E. Extend gas piping to units, provide drop with manual gas shutoff valve, pressure reducing valve, plugged test connection, tee and drip pocket. Locate piping drop so as not to interfere with service of unit. Extend gas piping runout, full size of gas train inlet, from tee to gas train connection, provide union with sufficient clearance for unit removal and service.

3.03 START-UP:

A. Furnace distributors technical service representative shall start up and check out furnace equipment as follows:
1. Verify proper gas orifice sizing.
2. Clock gas meter for rated output.
3. Verify and set gas pressure at unit.
4. Measure and record temperature rise.
5. Check safety controls for proper operation.
6. Check vent and combustion air sizes and performance.

3.04 OPERATION AND MAINTENANCE TRAINING:

A. Provide services of manufacturer's service representative to instruct Owner's personnel in operation and maintenance of gas fired furnaces. Training shall include start-up and shut-down servicing and preventative maintenance schedule and procedures, and troubleshooting procedures plus procedures for obtaining repair parts and technical assistance. Review operating and maintenance data contained in the Operating and Maintenance Manuals section.
   1. Schedule training with Owner, provide at least 7-day prior notice to the Architect/Engineer.
   2. Vendors for each piece of equipment controls, etc., shall participate along with the contractor(s).

END OF SECTION 238300

This page intentionally left blank

SECTION 260500
COMMON WORK RESULTS FOR ELECTRICAL

PART 1 GENERAL

1.01 RELATED DOCUMENTS

A. Drawings and general provisions of the Contract, including General and Supplementary Conditions and Division 01 Specification Sections, apply to this Section.

1.02 SUMMARY

A. Section Includes:
   1. Electrical equipment coordination and installation.
   2. Sleeves for raceways and cables.
   3. Sleeve seals.
   4. Grout.
   5. Common electrical installation requirements.

1.03 DEFINITIONS

A. EPDM: Ethylene-propylene-diene terpolymer rubber.

1.04 COORDINATION

A. Coordinate arrangement, mounting, and support of electrical equipment:
   1. To allow maximum possible headroom unless specific mounting heights that reduce headroom are indicated.
   2. To provide for ease of disconnecting the equipment with minimum interference to other installations.
   3. To allow right of way for piping and conduit installed at required slope.
   4. So connecting raceways, cables, wireways, cable trays, and busways will be clear of obstructions and of the working and access space of other equipment.

B. Coordinate electrical connections to equipment:
   1. Refer to equipment manufacturer's shop drawings and written instructions. Provide all power and control wiring with associated raceways for complete operation.
   2. Verify electrical requirements of equipment on nameplate and installation manual. Ensure that the electrical connections meet the requirements and notify Engineer of any discrepancies.
   3. Meet with equipment manufacturers representatives to coordinate equipment installation and electrical connections.

C. Coordinate installation of required supporting devices and set sleeves in cast-in-place concrete, masonry walls, and other structural components as they are constructed.

D. Coordinate sleeve selection and application with selection and application of firestopping specified in Division 07 Section "Penetration Firestopping."."

PART 2 PRODUCTS

2.01 SLEEVES FOR RACEWAYS AND CABLES

A. Steel Pipe Sleeves: ASTM A 53/A 53M, Type E, Grade B, Schedule 40, galvanized steel, plain ends.

B. Cast-Iron Pipe Sleeves: Cast or fabricated "wall pipe," equivalent to ductile-iron pressure pipe, with plain ends and integral waterstop, unless otherwise indicated.

C. Sleeves for Rectangular Openings: Galvanized sheet steel.
   1. Minimum Metal Thickness:
      a. For sleeve cross-section rectangle perimeter less than 50 inches (1270 mm) and no side more than 16 inches (406.4 mm), thickness shall be 0.052 inch (1.32 mm).
      b. For sleeve cross-section rectangle perimeter equal to, or more than, 50 inches (1270 mm) and 1 or more sides equal to, or more than, 16 inches (406.4 mm), thickness shall be 0.138 inch (3.51 mm).

2.02 SLEEVE SEALS

A. Description: Modular, water tight sealing device, designed for field assembly, to fill annular space between sleeve and raceway or cable.
   1. Manufacturers: Subject to compliance with requirements, provide products by one of the following:
      a. Advance Products & Systems, Inc.
      b. Calpico, Inc.
      c. Metraflex Co.
      d. O-Z Gedney
      e. Pipeline Seal and Insulator, Inc.
   2. Sealing Elements: EPDM interlocking links shaped to fit surface of cable or conduit. Include type and number required for material and size of raceway or cable.
   3. Pressure Plates: Carbon steel. Include two for each sealing element.
   4. Connecting Bolts and Nuts: Carbon steel with corrosion-resistant coating of length required to secure pressure plates to sealing elements. Include one for each sealing element.

2.03 GROUT

A. Nonmetallic, Shrinkage-Resistant Grout: ASTM C 1107, factory-packaged, nonmetallic aggregate grout, noncorrosive, nonstaining, mixed with water to consistency suitable for application and a 30-minute working time.

PART 3 EXECUTION

3.01 COMMON REQUIREMENTS FOR ELECTRICAL INSTALLATION

A. Comply with NECA 1.

B. Measure indicated mounting heights to bottom of unit for suspended items and to center of unit for wall-mounting items.

C. Headroom Maintenance: If mounting heights or other location criteria are not indicated, arrange and install components and equipment to provide maximum possible headroom consistent with these requirements.

D. Equipment: Install to facilitate service, maintenance, and repair or replacement of components of both electrical equipment and other nearby installations. Connect in such a way as to facilitate future disconnecting with minimum interference with other items in the vicinity.

E. Right of Way: Give to piping systems installed at a required slope.

3.02 SLEEVE INSTALLATION FOR ELECTRICAL PENETRATIONS

A. Electrical penetrations occur when raceways, cables, wireways, cable trays, or busways penetrate concrete slabs, concrete or masonry walls, or fire-rated floor and wall assemblies.

B. Concrete Slabs and Walls: Install sleeves for penetrations unless core-drilled holes or formed openings are used. Install sleeves during erection of slabs and walls.

C. Use pipe sleeves unless penetration arrangement requires rectangular sleeved opening.

D. Fire-Rated Assemblies: Install sleeves for penetrations of fire-rated floor and wall assemblies unless openings compatible with firestop system used are fabricated during construction of floor or wall.

E. Cut sleeves to length for mounting flush with both surfaces of walls.

F. Extend sleeves installed in floors 2 inches (50.8 mm) above finished floor level.

G. Size pipe sleeves to provide 1/4-inch (6.4-mm) annular clear space between sleeve and raceway or cable, unless indicated otherwise.

H. Seal space outside of sleeves with grout for penetrations of concrete and masonry
   1. Promptly pack grout solidly between sleeve and wall so no voids remain. Tool exposed surfaces smooth; protect grout while curing.

I. Interior Penetrations of Non-Fire-Rated Walls and Floors: Seal annular space between sleeve and raceway or cable, using joint sealant appropriate for size, depth, and location of joint. Comply with requirements in Division 07 Section "Joint Sealants.".

J. Fire-Rated-Assembly Penetrations: Maintain indicated fire rating of walls, partitions, ceilings, and floors at raceway and cable penetrations. Install sleeves and seal raceway and cable penetration sleeves with firestop materials. Comply with requirements in Division 07 Section "Penetration Firestopping."

K. Aboveground, Exterior-Wall Penetrations: Seal penetrations using steel pipe sleeves and mechanical sleeve seals. Select sleeve size to allow for 1-inch (25-mm) annular clear space between pipe and sleeve for installing mechanical sleeve seals.

L. Underground, Exterior-Wall Penetrations: Install cast-iron pipe sleeves. Size sleeves to allow for 1-inch (25-mm) annular clear space between raceway or cable and sleeve for installing mechanical sleeve seals. Install water-tight assembly.
   1. Slope underground conduits away from building to prevent accumulated water from traveling down conduit into building.

3.03 SLEEVE-SEAL INSTALLATION

A. Install to seal exterior wall penetrations.

B. Use type and number of sealing elements recommended by manufacturer for raceway or cable material and size. Position raceway or cable in center of sleeve. Assemble mechanical sleeve seals and install in annular space between raceway or cable and sleeve. Tighten bolts against pressure plates that cause sealing elements to expand and make watertight seal.

3.04 FIRESTOPPING

A. Apply firestopping to penetrations of fire-rated floor and wall assemblies for electrical installations to restore original fire-resistance rating of assembly. Firestopping materials and installation requirements are specified in Division 07 Section "Penetration Firestopping."

END OF SECTION 260500

This page intentionally left blank

SECTION 260519
LOW-VOLTAGE ELECTRICAL POWER CONDUCTORS AND CABLES

PART 1 GENERAL

1.01 REFERENCE STANDARDS

A. NFPA 70 - National Electrical Code; Most Recent Edition Adopted by Authority Having Jurisdiction, Including All Applicable Amendments and Supplements.

1.02 RELATED DOCUMENTS

A. Drawings and general provisions of the Contract, including General and Supplementary Conditions and Division 01 Specification Sections, apply to this Section.

1.03 SUMMARY

A. This Section includes the following:
   1. Building wires and cables rated 600 V and less.
   2. Connectors, splices, and terminations rated 600 V and less.

1.04 RELATED SECTIONS INCLUDE THE FOLLOWING:

A. Division 26 Section "Medium-Voltage Cables" for single-conductor cables, cable splices, and terminations for electrical distribution systems with 2001 to 35,000 V.

1.05 SUBMITTALS

A. Not required.

1.06 QUALITY ASSURANCE

A. Electrical Components, Devices, and Accessories: Listed and labeled as defined in NFPA 70, Article 100, by a testing agency acceptable to authorities having jurisdiction, and marked for intended use.

B. Comply with NFPA 70.

1.07 COORDINATION

A. MC Cable shall not be used unless specifically approved by Facilities Management electrical engineer(s) through the University Project Manager.

PART 2 PRODUCTS

2.01 CONDUCTORS AND CABLES

A. Manufacturers: Subject to compliance with requirements, provide products by one of the following:
   1. American Insulated Wire Corp.; a Leviton Company.
   2. General Cable Corporation.
   3. Senator Wire & Cable Company.
   4. Southwire Company.

B. Copper Conductors: Comply with NEMA WC 70.

C. Conductor Insulation: Comply with NEMA WC 70 for Types THHN-THWN-2, XHHW-2 CT rated, and SO.

D. Aluminum Conductors: Where shown on drawings.

E. Cables installed in cable tray shall be rated for “Cable Tray” use, CT listed.

F. Multiconductor Cable: Type SO with ground wire.

2.02 CONNECTORS AND SPLICES

A. Manufacturers: Subject to compliance with requirements, provide products by one of the following:
   1. AFC Cable Systems, Inc.
   2. Hubbell Power Systems, Inc.

3. O-Z/Gedney; EGS Electrical Group LLC.
4. 3M; Electrical Products Division.
5. Tyco Electronics Corp.

B. Description: Factory-fabricated connectors and splices of size, ampacity rating, material, type, and class for application and service indicated.

PART 3 EXECUTION

3.01 CONDUCTOR MATERIAL APPLICATIONS

A. Service and Feeders: Copper or aluminum as shown on the drawings. All conductors No. 12 AWG and larger shall be stranded.

B. Branch Circuits: Copper or aluminum as shown on the drawings. All conductors No. 12 AWG and larger shall be stranded.

3.02 CONDUCTOR INSULATION AND MULTICONDUCTOR CABLE APPLICATIONS AND WIRING METHODS

A. Service Entrance: Type XHHW-2, single conductors in raceway.

B. Feeders: Type THHN-THWN-2, single conductors in raceway.

C. Branch Circuits: Type THHN-THWN-2, single conductors in raceway.

D. Multi-Wire Branch Circuits: Install no more than three circuits in a raceway, unless specifically shown otherwise.

E. Neutral Conductors: Provide one neutral conductor for each phase conductor. Shared neutral conductors are not allowed.

F. Minimum Branch Circuit Conductor Size: Provide the following minimum sizes for distances listed on 20A branch circuits to prevent excessive voltage drop. The circuit length shall be measured along the length of the conductor form the circuit breaker in the panelboard to the last device on the circuit. Increase raceway size to comply with conductor fill requirements of NFPA 70.

G. Upsizing of Conductors
   1. Branch Circuit Voltage of 120V:
      a. Circuit lengths less than 70 feet (2133.6 cm): Provide minimum #12 AWG conductor size.
      b. Circuit lengths between 70 feet (2133.6 cm) and 110 feet (3352.8 cm) and/or where more than 3 current carrying conductors are installed in a single raceway: Provide minimum #10 AWG conductor size.
      c. Circuit lengths between 110 feet (3352.8 cm) and 170 feet (5181.6 cm): Provide minimum #8 AWG conductor size.
      d. Circuit lengths greater than 170 feet (5181.6 cm): Perform voltage drop calculations and provide conductor size to keep branch circuit voltage drop less than 3% with a 15 amp load.
   2. Branch Circuit Voltage of 277V:
      a. Circuit lengths less than 150 feet (4572 cm): Provide minimum #12 AWG conductor size.
      b. Circuit lengths between 150 feet (4572 cm) and 240 feet (7315.2 cm): Provide minimum #10 AWG conductor size.
      c. All lighting circuits feeding site lighting: Provide minimum #8 AWG conductor size for all conductors including equipment ground.
      d. Circuit lengths between 240 feet (7315.2 cm) and 380 feet (11582.4 cm): Provide minimum #8 AWG conductor size.
      e. Circuit lengths greater than 380 feet (11582.4 cm): Perform voltage drop calculations and provide conductor size to keep branch circuit voltage drop less than 3% with a 15 amp load

H. Cord Drops and Portable Appliance Connections: Type SO, hard service cord with stainless-steel, wire-mesh, strain relief device at terminations to suit application.

I. Class 1 Control Circuits: Type THHN-THWN-2, in raceway.

J. Class 2 Control Circuits: Type THHN-THWN-2, in raceway.

3.03 INSTALLATION OF CONDUCTORS AND CABLES

A. Install all conductors and cables in raceways per Division 26 Section, "Raceway and Boxes for Electrical Systems."

B. Conceal cables in finished walls, ceilings, and floors, unless otherwise indicated.

C. Use manufacturer-approved pulling compound or lubricant where necessary; compound used must not deteriorate conductor or insulation. Do not exceed manufacturer's recommended maximum pulling tensions and sidewall pressure values.

D. Use pulling means, including fish tape, cable, rope, and basket-weave wire/cable grips, that will not damage cables or raceway.

E. Install exposed cables parallel and perpendicular to surfaces of exposed structural members, and follow surface contours where possible. Paint to match conduits to surface in finished spaces.

F. Support cables according to Division 26 Section "Hangers and Supports for Electrical Systems."

G. Identify and color-code conductors and cables according to Division 26 Section "Identification for Electrical Systems."

3.04 CONNECTIONS

A. Tighten electrical connectors and terminals according to manufacturer's published torque-tightening values. If manufacturer's torque values are not indicated, use those specified in UL 486A.

B. Make splices and taps that are compatible with conductor material and that possess equivalent or better mechanical strength and insulation ratings than unspliced conductors.
   1. Splices for No. 10 AWG and smaller shall be screw on type similar to Scotch or Ideal wing nut connectors.
   2. Crimp on splices designed to be used without wire stripping shall not be acceptable.
   3. Use oxide inhibitor in each splice, termination, and tap for aluminum conductors.

C. Wiring at Outlets: Install conductor at each outlet, with at least 12 inches (304.8 mm) of slack.

3.05 FIELD QUALITY CONTROL

A. Perform tests and inspections and prepare test reports.

B. Tests and Inspections:
   1. After installing conductors and cables and before electrical circuitry has been energized, test service entrance and feeder conductors.
   2. Perform each visual and mechanical inspection and electrical test stated in NETA Acceptance Testing Specification. Certify compliance with test parameters.

C. Test Reports: Prepare a written report to record the following:
   1. Test procedures used.
   2. Test results that comply with requirements.
   3. Test results that do not comply with requirements and corrective action taken to achieve compliance with requirements.

D. Remove and replace malfunctioning units and retest as specified above.

END OF SECTION 260519

This page intentionally left blank

SECTION 260526
GROUNDING AND BONDING FOR ELECTRICAL SYSTEMS

PART 1 GENERAL

1.01 REFERENCE STANDARDS

A. NFPA 70 - National Electrical Code; Most Recent Edition Adopted by Authority Having Jurisdiction, Including All Applicable Amendments and Supplements.

1.02 RELATED DOCUMENTS

A. Drawings and general provisions of the Contract, including General and Supplementary Conditions and Division 01 Specification Sections, apply to this Section.

1.03 SUMMARY

A. Section Includes: Grounding systems and equipment.

B. Section includes grounding systems and equipment, plus the following special applications:
   1. Overhead-line grounding.
   2. Underground distribution grounding.
   3. Ground bonding common with lightning protection system.

1.04 SUBMITTALS

A. Field quality-control reports.

1.05 QUALITY ASSURANCE

A. Comply with NFPA 70 for grounding and bonding of electrical systems.

B. Comply with UL 467 for grounding and bonding materials and equipment.

C. Electrical Components, Devices, and Accessories: Listed and labeled as defined in NFPA 70, by a qualified testing agency, and marked for intended location and application.

PART 2 PRODUCTS

2.01 CONDUCTORS

A. Insulated Conductors: Copper wire or cable insulated for 600 V unless otherwise required by applicable Code or authorities having jurisdiction.

B. Bare Copper Conductors:
   1. Solid Conductors: ASTM B 3.
   2. Stranded Conductors: ASTM B 8.
   3. Tinned Conductors: ASTM B 33.
   4. Bonding Cable: 28 kcmil, 14 strands of No. 17 AWG conductor, 1/4 inch (6.35 mm) in diameter.
   5. Bonding Conductor: No. 4 or No. 6 AWG, stranded conductor.
   6. Bonding Jumper: Copper tape, braided conductors terminated with copper ferrules; 1-5/8 inches (41 mm) wide and 1/16 inch (1.59 mm) thick.
   7. Tinned Bonding Jumper: Tinned-copper tape, braided conductors terminated with copper ferrules; 1-5/8 inches (41 mm) wide and 1/16 inch (1.59 mm) thick.

C. Grounding Bus: Predrilled rectangular bars of annealed copper, 1/4 by 4 inches (6.3 by 100 mm) in cross section, with 9/32-inch (7.14-mm) holes spaced 1-1/8 inches (29 mm) apart. Stand-off insulators for mounting shall comply with UL 891 for use in switchboards, 600 V. Lexan or PVC, impulse tested at 5000 V.

2.02 CONNECTORS

A. Listed and labeled by an NRTL acceptable to authorities having jurisdiction for applications in which used and for specific types, sizes, and combinations of conductors and other items connected.

B. Bolted Connectors for Conductors and Pipes: Copper or copper alloy, pressure type with at least two bolts.

1. Pipe Connectors: Clamp type, sized for pipe.

C. All lugs used in the building system shall be rated for copper only.

D. Welded Connectors: Exothermic-welding kits of types recommended by kit manufacturer for materials being joined and installation conditions.

E. Bus-bar Connectors: Mechanical type, cast silicon bronze, solderless compression-type wire terminals, and long-barrel, two-bolt connection to ground bus bar.

2.03 GROUNDING ELECTRODES

A. Ground Rods: Copper-clad steel; 3/4 inch (19.05 mm) by 10 feet (304.8 cm) in diameter.

PART 3 EXECUTION

3.01 APPLICATIONS

A. Conductors: Install solid conductor for No. 8 AWG and smaller, and stranded conductors for No. 6 AWG and larger unless otherwise indicated.

B. Underground Grounding Conductors: Install two bare tinned-copper conductors, No. 4/0 AWG minimum.
1. Bury at least 36 inches (914.4 mm) below grade.
2. Duct-Bank Grounding Conductor: Bury 12 inches (304.8 mm) above duct bank when indicated as part of duct-bank installation.
3. Terminate Grounds at manholes and building.

C. Isolated Grounding Conductors:
1. Green-colored insulation with continuous yellow stripe. On feeders with isolated ground, identify grounding conductor where visible to normal inspection, with alternating bands of green and yellow tape, with at least three bands of green and two bands of yellow.

D. Grounding Bus: Install in electrical and telephone equipment rooms, in rooms housing service equipment, and elsewhere as indicated.
1. Install bus on insulated spacers 2 inches (50.8 mm) minimum from wall, 6 inches (152.4 mm) above finished floor unless otherwise indicated.
2. Where indicated on both sides of doorways, route bus up to top of door frame, across top of doorway, and down to specified height above floor; connect to horizontal bus.

E. Conductor Terminations and Connections:
1. Pipe and Equipment Grounding Conductor Terminations: Bolted connectors.
2. Underground Connections: Welded connectors except at test wells and as otherwise indicated.
3. Connections to Ground Rods at Test Wells: Bolted connectors.
4. Connections to Structural Steel: Welded connectors.

F. Conduits:
1. All metallic conduits shall be properly grounded and bonded.
2. For the following applications a separate code sized insulated ground conductor (in addition to the equipment grounding conductor), shall be terminated to an insulated/isolated ground buss:
a. Conduits serving a 120/208V panels or other feeders.

3.02 GROUNDING AT THE SERVICE

A. Equipment grounding conductors and grounding electrode conductors shall be connected to the ground bus. Install a main bonding jumper between the neutral and ground buses.

3.03 GROUNDING SEPARATELY DERIVED SYSTEMS

A. Generator: Install grounding electrode(s) at the generator location. The electrode shall be connected to the equipment grounding conductor and to the frame of the generator.

3.04 GROUNDING UNDERGROUND DISTRIBUTION SYSTEM COMPONENTS

A. Comply with IEEE C2 grounding requirements.

B. Grounding Manholes and Handholes: Install two driven ground rods through manhole or handhole floor at opposite corners, close to wall, and set rod depth so 4 inches (101.6 mm) will extend above finished floor. If necessary, install ground rod before manhole is placed and provide No. 4/0 AWG bare, tinned-copper conductor from ground rod into manhole through a waterproof sleeve in manhole wall. Protect ground rods passing through concrete floor with a double wrapping of pressure-sensitive insulating tape or heat-shrunk insulating sleeve from 2 inches (50.8 mm) above to 6 inches (152.4 mm) below concrete. Seal floor opening with waterproof, nonshrink grout. Install 4/0 bare copper conductor around entire manhole, ground all connections and ground rods to this conductor. Ground the duct bank ground conductors to this ground ring as well.

C. Grounding Connections to Manhole Components: Bond exposed-metal parts such as inserts, cable racks, pulling irons, ladders, and cable shields within each manhole or handhole, to ground rod or grounding conductor. Make connections with No. 4 AWG minimum, stranded, hard-drawn copper bonding conductor. Train conductors level or plumb around corners and fasten to manhole walls. Connect to cable armor and cable shields according to written instructions by manufacturer of splicing and termination kits.

D. Pad-Mounted Transformers and Switches: Install two ground rods at each pad. Ground pad-mounted equipment and noncurrent-carrying metal items associated with substations by connecting them to underground duct bank grounding conductors, encased electrode conductors, re-enforcing rebar of equipment pad and other available grounding electrodes.

3.05 EQUIPMENT GROUNDING

A. Install insulated equipment grounding conductors with all feeders and branch circuits.

B. Air-Duct Equipment Circuits: Install insulated equipment grounding conductor to duct-mounted electrical devices operating at 120 V and more, including air cleaners, heaters, dampers, humidifiers, and other duct electrical equipment. Bond conductor to each unit and to air duct and connected metallic piping.

C. HVAC Metallic Duct and Pipe Bonding within secure areas: Bond all metallic ductwork and metallic piping within each secure area with #10CU ground and connect to the nearest available ground bus within the secure room.

D. Water Heater, Heat-Tracing, and Antifrost Heating Cables: Install a separate insulated equipment grounding conductor to each electric water heater and heat-tracing cable. Bond conductor to heater units, piping, connected equipment, and components.

E. Isolated Grounding Receptacle Circuits: Install an insulated equipment grounding conductor connected to the receptacle grounding terminal. Isolate conductor from raceway and from panelboard grounding terminals. Terminate at equipment grounding conductor terminal of the applicable derived system or service unless otherwise indicated.

F. Poles Supporting Outdoor Lighting Fixtures: Install grounding electrode and a separate insulated equipment grounding conductor in addition to grounding conductor installed with branch-circuit conductors.

G. Isolated Equipment Enclosure Circuits: For designated equipment supplied by a branch circuit or feeder, isolate equipment enclosure from supply circuit raceway with a nonmetallic raceway fitting listed for the purpose. Install fitting where raceway enters enclosure, and install a separate insulated equipment grounding conductor. Isolate conductor from raceway and from panelboard grounding terminals. Terminate at equipment grounding conductor terminal of the applicable derived system or service unless otherwise indicated.

H. Signal and Communication Equipment: In addition to grounding and bonding required by NFPA 70, provide a separate grounding system complying with requirements in TIA/ATIS J-STD-607-A.

1. For telephone, alarm, voice and data, and other communication equipment, provide No. 4 AWG minimum insulated grounding conductor in raceway from grounding electrode system to each service location, terminal cabinet, wiring closet, and central equipment

location.
2. Service and Central Equipment Locations and Wiring Closets: Terminate grounding conductor on a 1/4-by-4-by-12-inch (6.3-by-100-by-300-mm) grounding bus.
3. Terminal Cabinets: Terminate grounding conductor on cabinet grounding terminal.

3.06 INSTALLATION

A. Branch Circuits:
1. Raceways used for single or multiple branch circuits shall include a code sized green insulated ground conductor.
2. Circuits used for isolated ground outlets shall be run in separate raceways; or, shall have a separate green insulated ground conductor installed and tagged with identification at all outlet and junction boxes.

B. Grounding Conductors: Route along shortest and straightest paths possible unless otherwise indicated or required by Code. Avoid obstructing access or placing conductors where they may be subjected to strain, impact, or damage.

C. Ground Bonding Common with Existing Lightning Protection System: Comply with NFPA 780 and UL 96 when interconnecting with lightning protection system. Bond electrical power system ground directly to lightning protection system grounding conductor at closest point to electrical service grounding electrode. Use bonding conductor sized same as system grounding electrode conductor, and install in conduit.

D. Ground Rods: Drive rods until tops are 2 inches (50.8 mm) below finished floor or final grade unless otherwise indicated.
1. Interconnect ground rods with grounding electrode conductor below grade and as otherwise indicated. Make connections without exposing steel or damaging coating if any.
2. For grounding electrode system, install at least three rods spaced at least one-rod length from each other and located at least the same distance from other grounding electrodes, and connect to the service grounding electrode conductor.

E. Bonding Straps and Jumpers: Install in locations accessible for inspection and maintenance except where routed through short lengths of conduit.
1. Bonding to Structure: Bond straps directly to basic structure, taking care not to penetrate any adjacent parts.
2. Bonding to Equipment Mounted on Vibration Isolation Hangers and Supports: Install bonding so vibration is not transmitted to rigidly mounted equipment.
3. Use exothermic-welded connectors for outdoor locations; if a disconnect-type connection is required, use a bolted clamp.

F. Grounding and Bonding for Piping:
1. Metal Water Service Pipe: Install insulated copper grounding conductors, in conduit, from building's main service equipment, or grounding bus, to main metal water service entrances to building. Connect grounding conductors to main metal water service pipes; use a bolted clamp connector or bolt a lug-type connector to a pipe flange by using one of the lug bolts of the flange. Where a dielectric main water fitting is installed, connect grounding conductor on street side of fitting. Bond metal grounding conductor conduit or sleeve to conductor at each end.
2. Water Meter Piping: Use braided-type bonding jumpers to electrically bypass water meters. Connect to pipe with a bolted connector.
3. Bond each aboveground portion of gas piping system downstream from equipment shutoff valve.

G. Grounding for Steel Building Structure: Install a driven ground rod at base of each corner column and at intermediate exterior columns at distances not more than 60 feet (1828.8 cm) apart.

H. Bonding of Exposed Structural Metal: Bond all exposed structural metal that is not grounded to the service equipment enclosure. The points of attachment of the bonding jumpers shall be accessible.

I. Ufer Ground (Concrete-Encased Grounding Electrode): Fabricate according to NFPA 70; use a minimum of 20 feet (609.6 cm) of bare copper conductor not smaller than No. 2 AWG.
   1. If concrete foundation is less than 20 feet (609.6 cm) long, coil excess conductor within base of foundation.
   2. Bond grounding conductor to reinforcing steel in at least four locations and to anchor bolts. Extend grounding conductor below grade and connect to building's grounding grid or to grounding electrode external to concrete.

3.07 LABELING

A. Comply with requirements in Division 26 Section "Identification for Electrical Systems" Article for instruction signs. The label or its text shall be green.

B. Install labels at the telecommunications bonding conductor and grounding equalizer and at the grounding electrode conductor where exposed.
   1. Label Text: "If this connector or cable is loose or if it must be removed for any reason, notify the facility manager."

3.08 FIELD QUALITY CONTROL

A. Manufacturer's Field Service: Engage a factory-authorized service representative to inspect, test, and adjust components, assemblies, and equipment installations, including connections.

B. Perform tests and inspections.
   1. Manufacturer's Field Service: Engage a factory-authorized service representative to inspect components, assemblies, and equipment installations, including connections, and to assist in testing.

C. Tests and Inspections:
   1. After installing grounding system but before permanent electrical circuits have been energized, test for compliance with requirements.
   2. Inspect physical and mechanical condition. Verify tightness of accessible, bolted, electrical connections with a calibrated torque wrench according to manufacturer's written instructions.
   3. Test completed grounding system at each location where a maximum ground-resistance level is specified, at service disconnect enclosure grounding terminal , and at individual ground rods. Make tests at ground rods before any conductors are connected.
      a. Measure ground resistance no fewer than two full days after last trace of precipitation and without soil being moistened by any means other than natural drainage or seepage and without chemical treatment or other artificial means of reducing natural ground resistance.
      b. Perform tests by fall-of-potential method according to IEEE 81.
   4. Prepare dimensioned Drawings locating each test well, ground rod and ground-rod assembly, and other grounding electrodes. Identify each by letter in alphabetical order, and key to the record of tests and observations. Include the number of rods driven and their depth at each location, and include observations of weather and other phenomena that may affect test results. Describe measures taken to improve test results.

D. Grounding system will be considered defective if it does not pass tests and inspections.

E. Prepare test and inspection reports.

F. Report measured ground resistances that exceed the following values:
   1. Power and Lighting Equipment or System with Capacity of 500 kVA and Less: 10 ohms.
   2. Power and Lighting Equipment or System with Capacity of 500 to 1000 kVA: 5 ohms.
   3. Power and Lighting Equipment or System with Capacity More Than 1000 kVA: 3 ohms.
   4. Power Distribution Units or Panelboards Serving 120V or 208V equipment: 3 ohm(s).
   5. Substations and Pad-Mounted Equipment: 5 ohms.
   6. Manhole Grounds: 10 ohms.

G. Excessive Ground Resistance: If resistance to ground exceeds specified values, notify Architect promptly and include recommendations to reduce ground resistance.

END OF SECTION 260526

SECTION 260529
HANGERS AND SUPPORTS FOR ELECTRICAL SYSTEMS

PART 1 GENERAL

1.01 REFERENCE STANDARDS

A. MFMA-4 - Metal Framing Standards Publication; 2004.

1.02 RELATED DOCUMENTS

A. Drawings and general provisions of the Contract, including General and Supplementary Conditions and Division 01 Specification Sections, apply to this Section.

1.03 SUMMARY

A. This Section includes the following:
   1. Hangers and supports for electrical equipment and systems.
   2. Construction requirements for concrete bases.

B. Related Sections include the following:
   1. Division 26 Section "Vibration And Seismic Controls For Electrical Systems" for products and installation requirements necessary for compliance with seismic criteria.

1.04 DEFINITIONS

A. EMT: Electrical metallic tubing.

B. IMC: Intermediate metal conduit.

C. RMC: Rigid metal conduit.

1.05 PERFORMANCE REQUIREMENTS

A. Delegated Design: Design supports for multiple raceways, including comprehensive engineering analysis by a qualified professional engineer, using performance requirements and design criteria indicated.

B. Design supports for multiple raceways capable of supporting combined weight of supported systems and its contents.

C. Design equipment supports capable of supporting combined operating weight of supported equipment and connected systems and components.

D. Rated Strength: Adequate in tension, shear, and pullout force to resist maximum loads calculated or imposed for this Project, with a minimum structural safety factor of five times the applied force.

1.06 SUBMITTALS

A. Product Data: For the following:
   1. Steel slotted support systems.

B. Shop Drawings: Signed and sealed by a qualified professional engineer. Show fabrication and installation details and include calculations for the following:
   1. Trapeze hangers. Include Product Data for components.
   2. Steel slotted channel systems. Include Product Data for components.
   3. Nonmetallic slotted channel systems. Include Product Data for components.
   4. Equipment supports.

C. Welding certificates.

1.07 QUALITY ASSURANCE

A. Welding: Qualify procedures and personnel according to AWS D1.1/D1.1M, "Structural Welding Code - Steel."

B. Comply with NFPA 70.

1.08 COORDINATION

A. Coordinate size and location of concrete bases. Cast anchor-bolt inserts into bases. Concrete, reinforcement, and formwork requirements are specified in Division 03.

B. Coordinate installation of roof curbs, equipment supports, and roof penetrations. These items are specified in Division 07 Section "Roof Accessories."

PART 2 PRODUCTS

2.01 SUPPORT, ANCHORAGE, AND ATTACHMENT COMPONENTS

A. Steel Slotted Support Systems: Comply with MFMA-4, factory-fabricated components for field assembly.
   1. Manufacturers: Subject to compliance with requirements, provide products by one of the following:
      a. Allied Tube & Conduit.
      b. Cooper B-Line, Inc.; a division of Cooper Industries.
      c. ERICO International Corporation.
      d. GS Metals Corp.
      e. Thomas & Betts Corporation.
      f. Unistrut; Tyco International, Ltd.
      g. Wesanco, Inc.
   2. Metallic Coatings: Hot-dip galvanized after fabrication and applied according to MFMA-4.
   3. Nonmetallic Coatings: Manufacturer's standard PVC, polyurethane, or polyester coating applied according to MFMA-4.
   4. Painted Coatings: Manufacturer's standard painted coating applied according to MFMA-4.
   5. Channel Dimensions: Selected for applicable load criteria.

B. Raceway and Cable Supports: As described in NECA 1 and NECA 101.

C. Conduit and Cable Support Devices: Steel hangers, clamps, and associated fittings, designed for types and sizes of raceway or cable to be supported.

D. Support for Conductors in Vertical Conduit: Factory-fabricated assembly consisting of threaded body and insulating wedging plug or plugs for non-armored electrical conductors or cables in riser conduits. Plugs shall have number, size, and shape of conductor gripping pieces as required to suit individual conductors or cables supported. Body shall be malleable iron.

E. Structural Steel for Fabricated Supports and Restraints: ASTM A 36/A 36M, steel plates, shapes, and bars; black and galvanized.

F. Mounting, Anchoring, and Attachment Components: Items for fastening electrical items or their supports to building surfaces include the following:
   1. Powder-Actuated Fasteners: Threaded-steel stud, for use in hardened portland cement concrete, steel, or wood, with tension, shear, and pullout capacities appropriate for supported loads and building materials where used.
      a. Manufacturers: Subject to compliance with requirements, provide products by one of the following:
         1) Hilti Inc.
         2) ITW Ramset/Red Head; a division of Illinois Tool Works, Inc.
         3) MKT Fastening, LLC.
         4) Simpson Strong-Tie Co., Inc.; Masterset Fastening Systems Unit.
   2. Mechanical-Expansion Anchors: Insert-wedge-type, zinc-coated steel, for use in hardened portland cement concrete with tension, shear, and pullout capacities appropriate for supported loads and building materials in which used.
      a. Manufacturers: Subject to compliance with requirements, provide products by one of the following:
         1) Cooper B-Line, Inc.; a division of Cooper Industries.
         2) Empire Tool and Manufacturing Co., Inc.

3) Hilti Inc.
4) ITW Ramset/Red Head; a division of Illinois Tool Works, Inc.
5) MKT Fastening, LLC.

3. Concrete Inserts: Steel or malleable-iron, slotted support system units similar to MSS Type 18; complying with MFMA-4 or MSS SP-58.
4. Clamps for Attachment to Steel Structural Elements: MSS SP-58, type suitable for attached structural element.
5. Through Bolts: Structural type, hex head, and high strength. Comply with ASTM A 325.
6. Toggle Bolts: All-steel springhead type.
7. Hanger Rods: Threaded steel.

2.02 FABRICATED METAL EQUIPMENT SUPPORT ASSEMBLIES

A. Description: Welded or bolted, structural-steel shapes, shop or field fabricated to fit dimensions of supported equipment.

B. Materials: Comply with requirements in Division 05 Section "Metal Fabrications" for steel shapes and plates.

PART 3 EXECUTION

3.01 APPLICATION

A. Comply with NECA 1 and NECA 101 for application of hangers and supports for electrical equipment and systems except if requirements in this Section are stricter.

B. Maximum Support Spacing and Minimum Hanger Rod Size for Raceway: Space supports for EMT, IMC, and RMC as scheduled in NECA 1, where its Table 1 lists maximum spacings less than stated in NFPA 70. Minimum rod size shall be 1/4 inch (6.35 mm) in diameter.

C. Multiple Raceways or Cables: Install trapeze-type supports fabricated with steel slotted support system, sized so capacity can be increased by at least 50 percent in future without exceeding specified design load limits.
1. Secure raceways and cables to these supports with two-bolt conduit clamps.

3.02 SUPPORT INSTALLATION

A. Comply with NECA 1 and NECA 101 for installation requirements except as specified in this Article.

B. Strength of Support Assemblies: Where not indicated, select sizes of components so strength will be adequate to carry present and future static loads within specified loading limits. Minimum static design load used for strength determination shall be weight of supported components plus 200 lb (90 kg).

C. Mounting and Anchorage of Surface-Mounted Equipment and Components: Anchor and fasten electrical items and their supports to building structural elements by the following methods unless otherwise indicated by code:
1. To Wood: Fasten with lag screws or through bolts.
2. To New Concrete: Bolt to concrete inserts.
3. To Masonry: Approved toggle-type bolts on hollow masonry units and expansion anchor fasteners on solid masonry units.
4. To Existing Concrete: Expansion anchor fasteners.
5. Instead of expansion anchors, powder-actuated driven threaded studs provided with lock washers and nuts may be used in existing standard-weight concrete 4 inches (101.6 mm) thick or greater. Do not use for anchorage to lightweight-aggregate concrete or for slabs less than 4 inches (101.6 mm) thick.
6. To Steel: Welded threaded studs complying with AWS D1.1/D1.1M, with lock washers and nuts.
7. To Light Steel: Sheet metal screws.
8. Items Mounted on Hollow Walls and Nonstructural Building Surfaces: Mount cabinets, panelboards, disconnect switches, control enclosures, pull and junction boxes,

transformers, and other devices on slotted-channel racks attached to substrate by means that meet seismic-restraint strength and anchorage requirements.

D. Drill holes for expansion anchors in concrete at locations and to depths that avoid reinforcing bars.

E. Manhole Requirements:
   1. On manhole walls install a minimum of three, evenly spaced, flush cast-in horizontal unistrut cable supports. The lowest support shall be at 12” above the finished floor of the manhole, and the remaining two install at 3’-8” and 6’-4” above manhole floor.
   2. In addition, install vertical, surface mounted, unistrut cable supports over the cast-in horizontal supports. Vertical supports shall be installed in a minimum of four columns along each long wall and two columns along each short wall.
   3. Support each cable at unistrut cable supports with rubber cush-grips.
   4. Ring each cable around the manhole before terminating.

3.03 INSTALLATION OF FABRICATED METAL SUPPORTS

A. Comply with installation requirements in Division 05 Section "Metal Fabrications" for site-fabricated metal supports.

B. Cut, fit, and place miscellaneous metal supports accurately in location, alignment, and elevation to support and anchor electrical materials and equipment.

C. Field Welding: Comply with AWS D1.1/D1.1M.

3.04 CONCRETE BASES

A. Provide concrete bases for all floor mounted equipment including but not limited to: transformers, switchboards, generators, switches, cabinets, etc.

B. Construct concrete bases of dimensions indicated but not less than 4 inches (101.6 mm) larger in both directions than supported unit, and so anchors will be a minimum of 10 bolt diameters from edge of the base.

C. Use 3000-psi (20.7-MPa), 28-day compressive-strength concrete. Concrete materials, reinforcement, and placement requirements are specified in Division 03 Section "Cast-in-Place Concrete."

D. Anchor equipment to concrete base.
   1. Place and secure anchorage devices. Use supported equipment manufacturer's setting drawings, templates, diagrams, instructions, and directions furnished with items to be embedded.
   2. Install anchor bolts to elevations required for proper attachment to supported equipment.
   3. Install anchor bolts according to anchor-bolt manufacturer's written instructions.

END OF SECTION 260529

SECTION 260533
RACEWAY AND BOXES FOR ELECTRICAL SYSTEMS

PART 1 GENERAL

1.01 RELATED DOCUMENTS

A. Drawings and general provisions of the Contract, including General and Supplementary Conditions and Division 01 Specification Sections, apply to this Section.

1.02 SUMMARY

A. This Section includes raceways, fittings, boxes, enclosures, and cabinets for electrical wiring.

B. Related Sections include the following:
   1. Division 26 Section "Underground Ducts and Raceways for Electrical Systems" for exterior ductbanks, manholes, and underground utility construction.

1.03 DEFINITIONS

A. EMT: Electrical metallic tubing.

B. FMC: Flexible metal conduit.

C. IMC: Intermediate metal conduit.

D. LFMC: Liquidtight flexible metal conduit.

E. RNC: Rigid nonmetallic conduit.

1.04 SUBMITTALS

A. Product Data: For surface raceways, floor boxes, hinged-cover enclosures, and cabinets.

B. Shop Drawings: For the following raceway components. Include plans, elevations, sections, details, and attachments to other work.
   1. Custom enclosures and cabinets.
   2. For handholes and boxes for underground wiring, including the following:
      a. Duct entry provisions, including locations and duct sizes.
      b. Frame and cover design.
      c. Grounding details.
      d. Dimensioned locations of cable rack inserts, and pulling-in and lifting irons.
      e. Joint details.

C. Source quality-control test reports.

D. Raceway and fitting submittals - Not required.

1.05 QUALITY ASSURANCE

A. Electrical Components, Devices, and Accessories: Listed and labeled as defined in NFPA 70, Article 100, by a testing agency acceptable to authorities having jurisdiction, and marked for intended use.

B. Comply with NFPA 70.

PART 2 PRODUCTS

2.01 METAL CONDUIT AND TUBING

A. Manufacturers: Subject to compliance with requirements, provide products by one of the following:
   1. AFC Cable Systems, Inc.
   2. Alflex Inc.
   3. Allied Tube & Conduit; a Tyco International Ltd. Co.
   4. Anamet Electrical, Inc.; Anaconda Metal Hose.
   5. Electri-Flex Co.
   6. Manhattan/CDT/Cole-Flex.
   7. Maverick Tube Corporation.

8. O-Z Gedney; a unit of General Signal.
9. Wheatland Tube Company.

B. Rigid Steel Conduit: ANSI C80.1.

C. IMC: ANSI C80.6.

D. PVC-Coated Steel Conduit: PVC-coated rigid steel conduit.
1. Comply with NEMA RN 1.
2. Coating Thickness: 0.040 inch (1.02 mm), minimum.

E. EMT: ANSI C80.3.

F. FMC: Zinc-coated steel.

G. LFMC: Flexible steel conduit with PVC jacket.

H. Fittings for Conduit (Including all Types and Flexible and Liquidtight), EMT, and Cable: NEMA FB 1; listed for type and size raceway with which used, and for application and environment in which installed.
1. Conduit Fittings for Hazardous (Classified) Locations: Comply with UL 886.
2. Fittings for EMT: Steel, set-screw or compression type.
3. Coating for Fittings for PVC-Coated Conduit: Minimum thickness, 0.040 inch (1.02 mm), with overlapping sleeves protecting threaded joints.

I. Joint Compound for Rigid Steel Conduit or IMC: Listed for use in cable connector assemblies, and compounded for use to lubricate and protect threaded raceway joints from corrosion and enhance their conductivity.

2.02 NONMETALLIC CONDUIT AND TUBING

A. Manufacturers: Subject to compliance with requirements, provide products by one of the following:
1. Heritage Plastics
2. AFC Cable Systems, Inc.
3. Anamet Electrical, Inc.; Anaconda Metal Hose.
4. Arnco Corporation.
5. CANTEX Inc.
6. CertainTeed Corp.; Pipe & Plastics Group.
7. Condux International, Inc.
8. ElecSYS, Inc.
9. Electri-Flex Co.
10. Lamson & Sessions; Carlon Electrical Products.
11. Manhattan/CDT/Cole-Flex.
12. RACO; a Hubbell Company.
13. Thomas & Betts Corporation.

B. RNC: NEMA TC 2, Type EPC-40-PVC, unless otherwise indicated.

C. Fittings for RNC: NEMA TC 3; match to conduit or tubing type and material.

2.03 METAL WIREWAYS

A. Manufacturers: Subject to compliance with requirements, provide products by one of the following:
1. Cooper B-Line, Inc.
2. Hoffman.
3. Square D; Schneider Electric.

B. Description: Sheet metal sized and shaped as indicated, NEMA 250, Type 1 for indoor dry installations and 3R for outdoor and wet or damp location, unless otherwise indicated.

C. Fittings and Accessories: Include couplings, offsets, elbows, expansion joints, adapters, hold-down straps, end caps, and other fittings to match and mate with wireways as required for

complete system.

D. Wireway Covers: Hinged type.

E. Finish: Manufacturer's standard enamel finish.

2.04 BOXES, ENCLOSURES, AND CABINETS

A. Manufacturers: Subject to compliance with requirements, provide products by one of the following:
   1. Cooper Crouse-Hinds; Div. of Cooper Industries, Inc.
   2. EGS/Appleton Electric.
   3. Erickson Electrical Equipment Company.
   4. Hoffman.
   5. Hubbell Incorporated; Killark Electric Manufacturing Co. Division.
   6. O-Z/Gedney; a unit of General Signal.
   7. RACO; a Hubbell Company.
   8. Robroy Industries, Inc.; Enclosure Division.
   9. Scott Fetzer Co.; Adalet Division.
   10. Spring City Electrical Manufacturing Company.
   11. Thomas & Betts Corporation.
   12. Walker Systems, Inc.; Wiremold Company (The).
   13. Woodhead, Daniel Company; Woodhead Industries, Inc. Subsidiary.

B. Sheet Metal Outlet and Device Boxes: NEMA OS 1; double-gang, minimum 4-11/16" square boxes with single or double-gang mud ring appropriate for the device and wall plate.
   1. Boxes in concrete and block walls may be single-gang.

C. Cast-Metal Outlet and Device Boxes: NEMA FB 1, aluminum, Type FD, with gasketed cover.

D. Small Sheet Metal Pull and Junction Boxes: NEMA OS 1.

E. Cast-Metal Access, Pull, and Junction Boxes: NEMA FB 1, cast aluminum with gasketed cover.

F. Hinged-Cover Enclosures: NEMA 250, Type 1, with continuous-hinge cover with flush latch, unless otherwise indicated.
   1. Metal Enclosures: Steel, finished inside and out with manufacturer's standard enamel.

G. Cabinets:
   1. NEMA 250, Type 1, galvanized-steel box with removable interior panel and removable front, finished inside and out with manufacturer's standard enamel.
   2. Hinged door in front cover with flush latch and concealed hinge.
   3. Key latch to match panelboards.
   4. Metal barriers to separate wiring of different systems and voltage.
   5. Accessory feet where required for freestanding equipment.

2.05 HANDHOLES AND BOXES FOR EXTERIOR UNDERGROUND WIRING

A. Description: Comply with SCTE 77.
   1. Color of Frame and Cover: Gray.
   2. Configuration: Units shall be designed for flush burial and have closed bottom, unless otherwise indicated.
   3. Cover: Weatherproof, secured by tamper-resistant locking devices and having structural load rating consistent with enclosure.
   4. Cover Finish: Nonskid finish shall have a minimum coefficient of friction of 0.50.
   5. Cover Legend: Molded lettering, "ELECTRIC." or "TELEPHONE" as required for each service.
   6. Conduit Entrance Provisions: Conduit-terminating fittings shall mate with entering ducts for secure, fixed installation in enclosure wall.
   7. Handholes 12 inches (304.8 mm) wide by 24 inches (609.6 mm) long (11.81 inch (300 mm) wide by 23.62 inch (600 mm) long) and larger shall have inserts for cable racks and

pulling-in irons installed before concrete is poured.

B. Polymer-Concrete Handholes and Boxes with Polymer-Concrete Cover: Molded of sand and aggregate, bound together with polymer resin, and reinforced with steel or fiberglass or a combination of the two.
   1. Manufacturers: Subject to compliance with requirements, provide products by one of the following:
      a. Armorcast Products Company.
      b. Carson Industries LLC.
      c. CDR Systems Corporation.
      d. NewBasis.

2.06 SOURCE QUALITY CONTROL FOR UNDERGROUND ENCLOSURES

A. Handhole and Pull-Box Prototype Test: Test prototypes of handholes and boxes for compliance with SCTE 77. Strength tests shall be for specified tier ratings of products supplied.
   1. Tests of materials shall be performed by a independent testing agency.
   2. Strength tests of complete boxes and covers shall be by either an independent testing agency or manufacturer. A qualified registered professional engineer shall certify tests by manufacturer.
   3. Testing machine pressure gages shall have current calibration certification complying with ISO 9000 and ISO 10012, and traceable to NIST standards.

PART 3 EXECUTION

3.01 RACEWAY APPLICATION

A. Outdoors: Apply raceway products as specified below, unless otherwise indicated:
   1. Exposed Conduit: Rigid galvanized steel conduit.
   2. Concealed Conduit, Aboveground: Rigid steel conduit.
   3. Underground Conduit: RNC, Type EPC-40-PVC:
      a. Medium-Voltage Duct Banks: Concrete-encased.
      b. Provide wrapped rigid steel conduit for the following conditions:
         1) Penetrations through foundation walls.
         2) Bends greater than 22 degrees.
         3) Stub ups, or where underground conduits otherwise become exposed.
   4. Connection to Vibrating Equipment (Including Transformers and Hydraulic, Pneumatic, Electric Solenoid, or Motor-Driven Equipment): LFMC.
   5. Boxes and Enclosures, Aboveground: NEMA 250, Type 3R.
   6. Application of Handholes and Boxes for Underground Wiring:
      a. Polymer concrete, SCTE 77, Tier 15 structural load rating.

B. Indoors: Comply with the following indoor applications, unless otherwise indicated:
   1. All Feeders and Service Entrance: Rigid steel conduit.
   2. Branch Circuits, Exposed, Not Subject to Physical Damage: EMT.
   3. Branch Circuits, Exposed and Subject to Physical Damage: Rigid steel conduit. Includes raceways in the following locations:
      a. Loading dock.
      b. Corridors used for traffic of mechanized carts, forklifts, and pallet-handling units.
      c. Mechanical rooms.
   4. Branch Circuits, Concealed in Ceilings and Interior Walls and Partitions: EMT.
   5. Connection to Vibrating Equipment (Including Transformers and Hydraulic, Pneumatic, Electric Solenoid, or Motor-Driven Equipment): FMC, except use LFMC in damp or wet locations.
   6. Damp or Wet Locations: Rigid steel conduit.
   7. Boxes and Enclosures: NEMA 250, Type 1, except use NEMA 250, Type 4, stainless steel in damp or wet locations.

C. Minimum Raceway Size:

1. 3/4-inch (21-mm) trade size.
2. 1-1/4-inch trade size for outdoor lighting.

D. Raceway Fittings: Compatible with raceways and suitable for use and location.
1. Rigid and Intermediate Steel Conduit: Use threaded rigid steel conduit fittings, unless otherwise indicated.
2. PVC Externally Coated, Rigid Steel Conduits: Use only fittings listed for use with that material. Patch and seal all joints, nicks, and scrapes in PVC coating after installing conduits and fittings. Use sealant recommended by fitting manufacturer.

3.02 INSTALLATION

A. Comply with NECA 1 for installation requirements applicable to products specified in Part 2 except where requirements on Drawings or in this Article are stricter.

B. Keep raceways at least 6 inches (152.4 mm) away from parallel runs of flues and steam or hot-water pipes. Install horizontal raceway runs above water and steam piping.

C. Complete raceway installation before starting conductor installation.

D. Support raceways as specified in Division 26 Section "Hangers and Supports for Electrical Systems."

E. Properly ground raceways as specified in Division 26 Section "Grounding and Bonding for Electrical systems."

F. Arrange stub-ups so curved portions of bends are not visible above the finished slab.

G. Install no more than the equivalent of three 90-degree bends in any conduit run except for communications conduits, for which fewer bends are allowed.

H. Conceal conduit and EMT within finished walls, ceilings, and floors, unless otherwise indicated.

I. Do not install conduits embedded in elevated slabs.

J. Raceways Embedded in Slabs on Grade:
1. Run conduit larger than 1-inch (27-mm) trade size, parallel or at right angles to main reinforcement. Where at right angles to reinforcement, place conduit close to slab support.
2. Arrange raceways to cross building expansion joints at right angles with expansion fittings.
3. Change to rigid steel conduit before rising above the floor.

K. Threaded Conduit Joints, Exposed to Wet, Damp, Corrosive, or Outdoor Conditions: Apply listed compound to threads of raceway and fittings before making up joints. Follow compound manufacturer's written instructions.

L. Raceway Terminations at Locations Subject to Moisture or Vibration: Use insulating bushings to protect conductors, including conductors smaller than No. 4 AWG.

M. Install pull wires in empty raceways. Use polypropylene or monofilament plastic line with not less than 200-lb (90-kg) tensile strength. Leave at least 12 inches (304.8 mm) of slack at each end of pull wire.

N. Install raceway sealing fittings at suitable, approved, and accessible locations and fill them with listed sealing compound. For concealed raceways, install each fitting in a flush steel box with a blank cover plate having a finish similar to that of adjacent plates or surfaces. Install raceway sealing fittings at the following points:
1. Where conduits pass from warm to cold locations, such as boundaries of refrigerated spaces.
2. Where otherwise required by NFPA 70.

O. Expansion-Joint Fittings: Install in each run of conduit that crosses an expansion joint.

P. Flexible Conduit Connections: Use maximum of 72 inches (1828.8 mm) of flexible conduit for recessed and semirecessed lighting fixtures, equipment subject to vibration, noise transmission, or movement; and for transformers and motors.

1. Use LFMC in damp or wet locations.

Q. Recessed Boxes in Masonry Walls: Saw-cut opening for box in center of cell of masonry block, and install box flush with surface of wall.

R. Boxes in stud walls: Do not install boxes back to back in stud walls. Allow one stud separation or 24" minimum. Where this is not possible, then provide boxes with UL-listed fire rated and sound rated wrapping.

S. Conduits installed with wrinkles or kinks or otherwise in an unprofessional manner shall be replaced by the contractor at no additional cost to the owner.

3.03 INSTALLATION OF RACEWAYS FOR LOW VOLTAGE SYSTEMS

A. All conduits extending from the floor should extend 1-3” AFF and no more than 2” off any wall.

B. Conduit rows should not exceed two deep

C. Conduits that enter a Telecomm Room (TR) should terminate near the corners to allow for proper racking.

D. All pathways must not exceed 295’ from the TR to the com/outlet must not have a bend over 90 degrees or an aggregate of bends in excess of 180 degrees between pull points.

E. No conduit segments will not exceed 100’ without a pull point.

F. Conduit runs should be limited to less than 150’

G. All conduits should be equipped with a pull cord that has a minimum rating of 200lbs.

H. A minimum of 1” conduit is required for all Voice/Data locations

I. Wireless locations should be mounted directly to the ceiling or T-bar. Wall mount locations will be approved on a case by case basis in written form.

J. Pathways should be installed at least 3” of clear vertical space above the ceiling tiles and T-bars to ensure accessibility, and should at no point rest or be supported by any component of the suspended ceiling

K. J-hook supports are not acceptable

L. Underground entrances should not have more than 2 -90 degree bends between pull points

M. All comm. raceways will have a pull rope installed during initial installation (200lb)

3.04 INSTALLATION OF UNDERGROUND CONDUIT

A. Direct-Buried Conduit:
1. Excavate trench bottom to provide firm and uniform support for conduit. Prepare trench bottom as specified in Division 31 Section "Earth Moving" for pipe less than 6 inches (152.4 mm) in nominal diameter.
2. Install backfill as specified in Division 31 Section "Earth Moving."
3. After installing conduit, backfill and compact. Start at tie-in point, and work toward end of conduit run, leaving conduit at end of run free to move with expansion and contraction as temperature changes during this process. Firmly hand tamp backfill around conduit to provide maximum supporting strength. After placing controlled backfill to within 12 inches (304.8 mm) of finished grade, make final conduit connection at end of run and complete backfilling with normal compaction as specified in Division 31 Section "Earth Moving."
4. Install manufactured rigid steel conduit elbows for stub-ups at poles and equipment and at building entrances through the floor.
   a. Couple steel conduits to ducts with adapters designed for this purpose, and encase coupling with 3 inches (76.2 mm) of concrete.
   b. For stub-ups at equipment mounted on outdoor concrete bases, extend steel conduit horizontally a minimum of 60 inches (1524 mm) from edge of equipment pad or foundation. Install insulated grounding bushings on terminations at equipment.
5. Underground-Line Warning Tape: During backfilling of trenches install continuous underground-line warning tape with detectable metal strip directly above line at 6 to 8

inches (150 to 200 mm) below finished grade. Use multiple tapes where width of multiple lines installed in a common trench or concrete envelope exceeds 16 inches (406.4 mm) overall.

3.05 INSTALLATION OF UNDERGROUND HANDHOLES AND BOXES

A. Install handholes and boxes level and plumb and with orientation and depth coordinated with connecting conduits to minimize bends and deflections required for proper entrances.

B. Unless otherwise indicated, support units on a level bed of crushed stone or gravel, graded from 1/2-inch (12.5-mm) sieve to No. 4 (4.75-mm) sieve and compacted to same density as adjacent undisturbed earth.

C. Elevation: In paved areas, set so cover surface will be flush with finished grade. Set covers of other enclosures 1 inch (25.4 mm) above finished grade.

D. Install handholes and boxes with bottom below the frost line, below grade.

E. Install removable hardware, including pulling eyes, cable stanchions, cable arms, and insulators, as required for installation and support of cables and conductors and as indicated. Select arm lengths to be long enough to provide spare space for future cables, but short enough to preserve adequate working clearances in the enclosure.

F. Field-cut openings for conduits according to enclosure manufacturer's written instructions. Cut wall of enclosure with a tool designed for material to be cut. Size holes for terminating fittings to be used, and seal around penetrations after fittings are installed.

3.06 FIRESTOPPING

A. Apply firestopping to electrical penetrations of fire-rated floor and wall assemblies to restore original fire-resistance rating of assembly. Firestopping materials and installation requirements are specified in Division 07 Section "Penetration Firestopping."

3.07 PROTECTION

A. Provide final protection and maintain conditions that ensure coatings, finishes, and cabinets are without damage or deterioration at time of Substantial Completion.
   1. Repair damage to galvanized finishes with zinc-rich paint recommended by manufacturer.
   2. Repair damage to PVC or paint finishes with matching touchup coating recommended by manufacturer.

END OF SECTION 260533

This page intentionally left blank

SECTION 260536
CABLE TRAYS FOR ELECTRICAL SYSTEMS

PART 1 GENERAL

1.01 REFERENCE STANDARDS

A. ASTM B633 - Standard Specification for Electrodeposited Coatings of Zinc on Iron and Steel; 2023.

1.02 RELATED DOCUMENTS

A. Drawings and general provisions of the Contract, including General and Supplementary Conditions and Division 01 Specification Sections, apply to this Section.

1.03 SUMMARY

A. This Section includes steel cable trays and accessories.

1.04 SUBMITTALS

A. Product Data: Include data indicating dimensions and finishes for each type of cable tray indicated.

B. Shop Drawings: For each type of cable tray.
   1. Show fabrication and installation details of cable tray, including plans, elevations, and sections of components and attachments to other construction elements. Designate components and accessories, including clamps, brackets, hanger rods, splice-plate connectors, expansion-joint assemblies, straight lengths, and fittings.
   2. Seismic-Restraint Details: Signed and sealed by a qualified professional engineer, licensed in the state where Project is located, who is responsible for their preparation.
      a. Design Calculations: Calculate requirements for selecting seismic restraints.
      b. Detail fabrication, including anchorages and attachments to structure and to supported cable trays.

C. Coordination Drawings: Floor plans and sections, drawn to scale. Include scaled cable tray layout and relationships between components and adjacent structural, electrical, and mechanical elements. Show the following:
   1. Vertical and horizontal offsets and transitions.
   2. Clearances for access above and to side of cable trays.
   3. Vertical elevation of cable trays above the floor or bottom of ceiling structure.

D. Field quality-control reports.

E. Operation and Maintenance Data: For cable trays to include in emergency, operation, and maintenance manuals.

1.05 QUALITY ASSURANCE

A. Source Limitations: Obtain cable tray components through one source from a single manufacturer.

B. Electrical Components, Devices, and Accessories: Listed and labeled as defined in NFPA 70, Article 100, by a testing agency acceptable to authorities having jurisdiction, and marked for intended use.

C. Comply with NFPA 70.

1.06 DELIVERY, STORAGE, AND HANDLING

A. Store indoors to prevent water or other foreign materials from staining or adhering to cable tray. Unpack and dry wet materials before storage.

PART 2 PRODUCTS

2.01 MANUFACTURERS

A. Manufacturers: Subject to compliance with requirements, provide products by one of the following:

1. Chalfant Manufacturing Company.
2. Cooper B-Line, Inc.
3. Cablofil (Legrand)
4. GS Metals Corp.; GLOBETRAY Products.
5. MONO-SYSTEMS, Inc.
6. MPHusky.
7. PW Industries.

2.02 MATERIALS AND FINISHES

A. Wire Mesh Cable Trays, Fittings, and Accessories: Steel wire mesh/basket type, complying with NEMA VE 1.
   1. Carbon steel ASTM A510 grade 1008, electroplated zinc complying with ASTM B633.

B. Sizes and Configurations: Refer to Drawings for specific requirements for types, materials, sizes, and configurations. Where not indicated, provide the following size:
   1. 18" wide x 4" deep.

C. Provide trapeze style support for cable trays.

2.03 CABLE TRAY ACCESSORIES

A. Fittings: Tees, crosses, risers, elbows, and other fittings as indicated, of same materials and finishes as cable tray.

B. Cable tray supports and connectors, including bonding jumpers, as recommended by cable tray manufacturer.

2.04 SOURCE QUALITY CONTROL

A. Perform design and production tests according to NEMA VE 1.

PART 3 EXECUTION

3.01 CABLE TRAY INSTALLATION

A. Comply with recommendations in NEMA VE 2. Install as a complete system, including all necessary fasteners, hold-down clips, splice-plate support systems, barrier strips, hinged horizontal and vertical splice plates, elbows, reducers, tees, and crosses.

B. Drawings show general cable tray layout and do not detail changes in elevation or offsets required to maneuver around structure and work of other trades. Coordinate cable tray layout with other construction elements and include transitions, offsets and changes in elevation.

C. Remove burrs and sharp edges from cable trays.

D. Fasten cable tray supports to building structure and install seismic restraints.
   1. Design each fastener and support to carry load indicated by seismic requirements and to comply with seismic-restraint details according to Division 26 Section "Vibration and Seismic Controls for Electrical Systems."
   2. Place supports so that spans do not exceed cable tray ratings with installed weight load.
   3. Construct supports from channel members, threaded rods, and other appurtenances furnished by cable tray manufacturer. Arrange supports in trapeze or wall-bracket form as required by application.
   4. Support bus assembly to prevent twisting from eccentric loading.
   5. Manufacture center-hung support, designed for 60 percent versus 40 percent eccentric loading condition, with a safety factor of 3.
   6. Locate and install supports according to NEMA VE 1.

E. Make connections to equipment with flanged fittings fastened to cable tray and to equipment. Support cable tray independent of fittings. Do not carry weight of cable tray on equipment enclosure.

F. Install expansion connectors where cable tray crosses building expansion joint and in cable tray runs that exceed dimensions recommended in NEMA VE 1. Space connectors and set gaps according to applicable standard.

G. Make changes in direction and elevation using standard fittings.

H. Make cable tray connections using standard fittings.

I. Cable Trays Above Accessible Ceilings:
   1. Locate bottom of cable tray between 3" - 12" above accessible ceiling tile such that ceiling tile can be removed and cable tray can be accessed.
   2. Locate cable tray at least 3" below piping and duct work so that top of tray can be accessed.
   3. Maintain at least 12" separation from lighting fixtures.
   4. Maintain at least 3" separation from branch circuits, and 18" separation from feeders.

J. Seal penetrations through fire and smoke barriers according to Division 07 Section "Penetration Firestopping."

K. Sleeves for Future Cables: Install capped sleeves for future cables through firestop-sealed cable tray penetrations of fire and smoke barriers.

L. Workspace: Install cable trays with enough space to permit access for installing cables.

M. Grounding and Bonding: bond cable tray to telecomm grounding system. Each conduit shall be bonded to cable tray with #8 cable for all low voltage cabling systems utilizing the cable tray.

3.02 CABLE INSTALLATION

A. Install cables only when cable tray installation has been completed and inspected.

B. Fasten cables on horizontal runs with cable clamps or cable ties as recommended by NEMA VE 2. Tighten clamps only enough to secure the cable, without indenting the cable jacket. Install cable ties with a tool that includes an automatic pressure-limiting device.

C. On vertical runs, fasten cables to tray every 18 inches (457.2 mm). Install intermediate supports when cable weight exceeds the load-carrying capacity of the tray rungs.

D. In existing construction, remove inactive or dead cables from cable tray.

E. The inside of a cable tray must be free of burrs, sharp edges, or projections that can damage the cable during installation

F. Elevation changes and offsets must be kept to a minimum

G. Tray should extend at least 1” into the TR then waterfall to 8’ to accommodate internal racking

H. When cable tray is used, conduit should extend from the telecom outlet located in the work area, directly to the cable tray.

I. Trays should be supported every 5’ and within 24” on each side of a fitting (unless otherwise noted by the manufacture)

J. All metallic cable trays must be grounded, marked and all sections bonded in accordance with applicable codes, standards and regulations

K. Pathways should be kept in common areas to avoid future maintenance occurring in private work areas.

L. Trays should be sized to be at no more than 40% fill.

3.03 CONNECTIONS

A. Ground cable trays according to manufacturer's written instructions.
   1. Bond discontinuous sections of cable trays together so that cable tray is electrically continuous.
   2. Bond cable trays to sections of metal raceways that are part of the cable pathway system.

3.04 FIELD QUALITY CONTROL

A. After installing cable trays and after electrical circuitry has been energized, survey for compliance with requirements. Perform the following field quality-control survey:

1. Visually inspect cable insulation for damage. Correct sharp corners, protuberances in cable tray, vibration, and thermal expansion and contraction conditions, which may cause or have caused damage.
2. Verify that the number, size, and voltage of cables in cable tray do not exceed that permitted by NFPA 70. Verify that communication or data-processing circuits are separated from power circuits by barriers.
3. Verify that there is no intrusion of such items as pipe, hangers, or other equipment that could damage cables.
4. Remove deposits of dust, industrial process materials, trash of any description, and any blockage of tray ventilation.
5. Visually inspect each cable tray joint and each ground connection for mechanical continuity. Check bolted connections between sections for corrosion. Clean and retorque in suspect areas.
6. Check for missing or damaged bolts, bolt heads, or nuts. When found, replace with specified hardware.
7. Perform visual and mechanical checks for adequacy of cable tray grounding; verify that all takeoff raceways are bonded to cable tray.

3.05 PROTECTION

A. Protect installed cable trays.
   1. Repair damage to galvanized finishes with zinc-rich paint recommended by cable tray manufacturer.
   2. Install temporary protection for cables in open trays to protect exposed cables from falling objects or debris during construction. Temporary protection for cables and cable tray can be constructed of wood or metal materials until the risk of damage is over.

END OF SECTION 260536

SECTION 260543
UNDERGROUND DUCTS AND RACEWAYS FOR ELECTRICAL SYSTEMS

PART 1 GENERAL

1.01 RELATED DOCUMENTS

A. Drawings and general provisions of the Contract, including General and Supplementary Conditions and Division 01 Specification Sections, apply to this Section.

1.02 SUMMARY

A. Section Includes:
   1. Conduit, ducts, and duct accessories for direct-buried and concrete-encased duct banks, and in single duct runs.
   2. Handholes and pull boxes.
   3. Manholes.

1.03 DEFINITION

A. RNC: Rigid nonmetallic conduit.

1.04 SUBMITTALS

A. Shop Drawings for Factory-Fabricated Handholes and Pull Boxes Other Than Precast Concrete: Include dimensioned plans, sections, and elevations, and fabrication and installation details, including the following:
   1. Duct entry provisions, including locations and duct sizes.
   2. Reinforcement details.
   3. Frame and cover design and manhole frame support rings.
   4. Ladder details.
   5. Grounding details.
   6. Dimensioned locations of cable rack inserts, pulling-in and lifting irons, and sumps.
   7. Joint details.
   8. Structural Calculations for Manholes: Submit structural calculations based on the 2012 IBC, stamped and signed by a Structural Engineer in the State of Utah.

B. Product Data: For the following:
   1. Duct-bank materials, including separators and miscellaneous components.
   2. Ducts and conduits and their accessories, including elbows, end bells, bends, fittings, and solvent cement.
   3. Accessories for manholes, handholes, pull boxes, and other utility structures.
   4. Warning tape.
   5. Warning planks.

C. Duct-Bank Coordination Drawings: Show duct profiles and coordination with other utilities and underground structures.
   1. Include plans and sections, drawn to scale, and show bends and locations of expansion fittings.

D. Product Certificates: For concrete and steel used in precast concrete manholes, pull boxes and handholes, comply with ASTM C 858.

E. Source quality-control reports.

F. Field quality-control reports.

G. ICC Evaluation Reports: For damp-proofing and water-proofing materials, submit ICC evaluation reports to Engineer and DFCM as a deferred submittal.

1.05 QUALITY ASSURANCE

A. Comply with IEEE C2.

B. Comply with NFPA 70.

1.06 DELIVERY, STORAGE, AND HANDLING

A. Deliver ducts to Project site with ends capped. Store nonmetallic ducts with supports to prevent bending, warping, and deforming.

B. Store precast concrete and other factory-fabricated underground utility structures at Project site as recommended by manufacturer to prevent physical damage. Arrange so identification markings are visible.

C. Lift and support precast concrete units only at designated lifting or supporting points.

1.07 PROJECT CONDITIONS

A. Interruption of Existing Electrical Service: Do not interrupt electrical service to facilities occupied by Owner or others unless permitted under the following conditions and then only after arranging to provide temporary electrical service according to requirements indicated:
   1. Notify Engineer and Owner no fewer than two weeks in advance of proposed interruption of electrical service.
   2. Do not proceed with interruption of electrical service without Owner's written permission.

1.08 COORDINATION

A. Coordinate layout and installation of ducts, manholes, handholes, and pull boxes with final arrangement of other utilities, site grading, and surface features as determined in the field.

B. Coordinate elevations of ducts and duct-bank entrances into manholes, handholes, and pull boxes with final locations and profiles of ducts and duct banks as determined by coordination with other utilities, underground obstructions, and surface features. Revise locations and elevations from those indicated as required to suit field conditions and to ensure that duct runs drain to manholes and handholes, and as approved by Architect.

PART 2 PRODUCTS

2.01 CONDUIT

A. Rigid Steel Conduit: Galvanized. Comply with ANSI C80.1.

B. RNC: NEMA TC 2, Type EPC-40-PVC and Type EPC-80-PVC, UL 651, with matching fittings by same manufacturer as the conduit, complying with NEMA TC 3 and UL 514B.

2.02 NONMETALLIC DUCTS AND DUCT ACCESSORIES

A. Manufacturers: Subject to compliance with requirements, provide products by one of the following:
   1. AFC Cable Systems.
   2. ARNCO Corporation.
   3. Beck Manufacturing.
   4. Cantex, Inc.
   5. CertainTeed Corp.
   6. Condux International, Inc.
   7. DCX-CHOL Enterprises, Inc.; ELECSYS Division.
   8. Electri-Flex Company.
   9. IPEX Inc.
   10. Lamson & Sessions; Carlon Electrical Products.
   11. Manhattan Wire Products; a Belden company.

B. Duct Accessories:
   1. Duct Separators: Factory-fabricated rigid PVC interlocking spacers, sized for type and sizes of ducts with which used, and retained to provide minimum duct spacings indicated while supporting ducts during concreting or backfilling.
   2. Warning Tape: Underground-line warning tape specified in Division 26 Section "Identification for Electrical Systems."

2.03 PRECAST CONCRETE HANDHOLES AND PULL BOXES

A. Manufacturers: Subject to compliance with requirements, provide products by one of the following:
   1. Christy Concrete Products.
   2. Cretex Concrete Products West, Inc.; Riverton Division.
   3. Elmhurst-Chicago Stone Co.
   4. Oldcastle Precast Group.
   5. Oldcastle Precast Inc.; Utility Vault Division.
   6. Utility Concrete Products, LLC.
   7. Wausau Tile Inc.

B. Comply with ASTM C 858 for design and manufacturing processes.

C. Ferrous metal hardware shall be hot-dip galvanized in accordance with ASTM A153 (ASTM A153M) and ASTM A123 (ASTM A123M).

D. Description: Factory-fabricated, reinforced-concrete, monolithically poured walls and bottom unless open-bottom enclosures are indicated. Frame and cover shall form top of enclosure and shall have load rating consistent with that of handhole or pull box.
   1. Frame and Cover: Weatherproof cast-iron frame, with cast-iron cover with recessed cover hook eyes and tamper-resistant, captive, cover-securing stainless-steel bolts.
   2. Frame and Cover: Weatherproof steel frame, with hinged steel access door assembly with tamper-resistant, captive, cover-securing stainless-steel bolts.
      a. Cover Hinges: Concealed, with hold-open ratchet assembly.
      b. Cover Handle: Recessed.
   3. Cover Finish: Nonskid finish shall have a minimum coefficient of friction of 0.50.
   4. Cover Legend: Molded lettering, "ELECTRIC" or "TELEPHONE" as required for each service.
   5. Configuration: Units shall be designed for flush burial and have closed bottom unless otherwise indicated.
   6. Extensions and Slabs: Designed to mate with bottom of enclosure. Same material as enclosure.
      a. Extension shall provide increased depth of 12 inches (304.8 mm).
      b. Slab: Same dimensions as bottom of enclosure, and arranged to provide closure.
   7. Windows: Precast openings in walls, arranged to match dimensions and elevations of approaching ducts and duct banks plus an additional 12 inches (304.8 mm) vertically and horizontally to accommodate alignment variations.
      a. Windows shall be located no less than 6 inches (152.4 mm) from interior surfaces of walls, floors, or frames and covers of handholes, but close enough to corners to facilitate racking of cables on walls.
      b. Window opening shall have cast-in-place, welded wire fabric reinforcement for field cutting and bending to tie in to concrete envelopes of duct banks.
      c. Window openings shall be framed with at least two additional No. 4 steel reinforcing bars in concrete around each opening.
   8. Duct Entrances in Handhole Walls: Cast end-bell or duct-terminating fitting in wall for each entering duct.
      a. Type and size shall match fittings to duct or conduit to be terminated.
      b. Fittings shall align with elevations of approaching ducts and be located near interior corners of handholes to facilitate racking of cable.
   9. Handholes 12 inches (304.8 mm) wide by 24 inches (609.6 mm) long (11.81 inch (300 mm) wide by 23.62 inch (600 mm) long) and larger shall have inserts for cable racks and pulling-in irons installed before concrete is poured.

PART 3 EXECUTION

3.01 CORROSION PROTECTION

A. Aluminum shall not be installed in contact with earth or concrete.

3.02 UNDERGROUND DUCT APPLICATION

A. Ducts for Electrical Cables over 600 V: RNC, NEMA Type EPC-40-PVC, in concrete-encased duct bank unless otherwise indicated.

B. Underground Ducts for Telephone, Communications, or Data Utility Service Cables: RNC, NEMA Type EPC-40-PVC, in concrete-encased duct bank unless otherwise indicated.

3.03 UNDERGROUND ENCLOSURE APPLICATION

A. Handholes and Pull Boxes for 600 V and Less:
   1. Units in Roadways and Other Deliberate Traffic Paths: Precast concrete. AASHTO HB 17, H-20 structural load rating.
   2. Units in Driveway, Parking Lot, and Off-Roadway Locations, Subject to Occasional, Nondeliberate Loading by Heavy Vehicles: Precast concrete, AASHTO HB 17, H-20 structural load rating.
   3. Units in Sidewalk and Similar Applications with a Safety Factor for Nondeliberate Loading by Vehicles: Precast concrete, AASHTO HB 17, H-10 structural load rating.

B. Manholes:
   1. Units Located in Roadways and Other Deliberate Traffic Paths by Heavy or Medium Vehicles: H-20 structural load rating according to AASHTO HB 17.
   2. Units Not Located in Deliberate Traffic Paths by Heavy or Medium Vehicles: H-10 load rating according to AASHTO HB 17.
   3. All new manholes shall be pre-cast concrete units. Where pre-cast cannot be used due to restricted site access or other obstructions, then cast-in-place manholes may be used, however, contractor shall submit shop drawings and design along with structural calculations stamped by a Structural Engineer for review.

3.04 EARTHWORK

A. Excavation and Backfill: Comply with Division 31 Section "Earth Moving," but do not use heavy-duty, hydraulic-operated, compaction equipment.

B. Restore surface features at areas disturbed by excavation and reestablish original grades unless otherwise indicated. Replace removed sod immediately after backfilling is completed.

C. Restore areas disturbed by trenching, storing of dirt, cable laying, and other work. Restore vegetation and include necessary topsoiling, fertilizing, liming, seeding, sodding, sprigging, and mulching. Comply with Division 32 Sections "Turf and Grasses" and "Plants."

D. Cut and patch existing pavement in the path of underground ducts and utility structures according to Division 01 Section "Cutting and Patching."

3.05 DUCT INSTALLATION

A. Slope: Pitch ducts a minimum slope of 1:300 down toward manholes and handholes and away from buildings and equipment. Slope ducts from a high point in runs between two manholes to drain in both directions.

B. Curves and Bends: Use 5-degree angle couplings for small changes in direction. For turns greater than 30 degrees use manufactured wrapped rigid metal long sweep bends with a minimum radius of 48 inches (1219.2 mm), both horizontally and vertically, at other locations unless otherwise indicated.

C. Joints: Use solvent-cemented joints in ducts and fittings and make watertight according to manufacturer's written instructions. Stagger couplings so those of adjacent ducts do not lie in same plane.

D. Duct Entrances to Manholes and Concrete and Polymer Concrete Handholes: Use end bells, spaced approximately 10 inches (254 mm) o.c. for 5-inch (125-mm) ducts, and vary proportionately for other duct sizes.
   1. Begin change from regular spacing to end-bell spacing 10 feet (304.8 cm) from the end bell without reducing duct line slope and without forming a trap in the line.
   2. Grout end bells into structure walls from both sides to provide watertight entrances.

E. Building Wall and Manhole Penetrations: Make a transition from underground duct to rigid steel conduit, wrapped in PVC tape at least 10 feet (304.8 cm) outside the building wall without reducing duct line slope away from the building and without forming a trap in the line. Use fittings manufactured for duct-to-conduit transition. Terminate with flush bell ends. Install conduit penetrations of building walls as specified in Division 26 Section "Common Work Results for Electrical."

F. Sealing: Provide temporary closure at terminations of ducts that have cables pulled with Sika “Sikadur Combiflex” sealing system or prior approved equal. Seal spare ducts at terminations with UL approved plugs to withstand at least 15-psig (1.03-MPa) hydrostatic pressure and seal with silicon sealant.

G. After installation of duct bank, pull a mandrel through each duct to ensure that no debris has collected in the duct. Then install pull cord and label at each end with date installed. Install a plastic conduit plug at each end of the rope and seal the plugs to each end of all unused conduits with silicone sealant.

H. Pulling Cord: Install 2500-lb- mule tape with lineal footage markings in ducts, including spares.

I. Concrete-Encased Ducts: Support ducts on duct separators.
   1. Separator Installation: Space separators close enough to prevent sagging and deforming of ducts, with not less than 4 spacers per 20 feet (609.6 cm) of duct. Secure separators to earth and to ducts to prevent floating during concreting. Stagger separators approximately 6 inches (152.4 mm) between tiers. Tie entire assembly together using fabric straps; do not use tie wires or reinforcing steel that may form conductive or magnetic loops around ducts or duct groups.
   2. Concreting Sequence: Pour each run of envelope between manholes or other terminations in one continuous operation.
      a. Start at one end and finish at the other, allowing for expansion and contraction of ducts as their temperature changes during and after the pour. Use expansion fittings installed according to manufacturer's written recommendations, or use other specific measures to prevent expansion-contraction damage.
      b. If more than one pour is necessary, terminate each pour in a vertical plane and install 3/4-inch (19-mm) reinforcing rod dowels extending 18 inches (457.2 mm) into concrete on both sides of joint near corners of envelope.
   3. Pouring Concrete: Spade concrete carefully during pours to prevent voids under and between conduits and at exterior surface of envelope. Do not allow a heavy mass of concrete to fall directly onto ducts. Use a plank to direct concrete down sides of bank assembly to trench bottom. Allow concrete to flow to center of bank and rise up in middle, uniformly filling all open spaces. Do not use power-driven agitating equipment unless specifically designed for duct-bank application.
   4. Mix red dye in concrete..
   5. Forms: Use walls of trench to form side walls of duct bank where soil is self-supporting and concrete envelope can be poured without soil inclusions; otherwise, use forms.
   6. Minimum Space between Ducts: 4 inches (101.6 mm) between ducts and exterior envelope wall, 3 inches (76.2 mm) between ducts for like services, and 24 inches (609.6 mm) between power and signal ducts.
   7. Depth, 600V and Below: Install top of duct bank at least 24 inches (609.6 mm) below finished grade in areas not subject to deliberate traffic, and at least 30 inches (762 mm) below finished grade in deliberate traffic paths for vehicles unless otherwise indicated.

8. Depth, Above 600V: Install top of duct bank at least 36 inches (914.4 mm) below finished grade unless otherwise indicated.
9. Stub-Ups: Use manufactured rigid steel conduit elbows for stub-ups at poles and equipment and at building entrances through the floor.
    a. Couple steel conduits to ducts with adapters designed for this purpose, and encase coupling with 3 inches (76.2 mm) of concrete.
    b. Stub-Ups to Equipment: For equipment mounted on outdoor concrete bases, extend steel conduit horizontally a minimum of 60 inches (1524 mm) from edge of base. Install insulated grounding bushings on terminations at equipment.
10. Warning Ribbon: Bury yellow metallic locator ribbon directly above centerline of duct bank 12” below finished grade.

3.06 INSTALLATION OF CONCRETE MANHOLES, HANDHOLES, AND PULL BOXES

A. Precast Concrete Handhole and Manhole Installation:
    1. Comply with ASTM C 891 unless otherwise indicated.
    2. Install units level and plumb and with orientation and depth coordinated with connecting ducts to minimize bends and deflections required for proper entrances.
    3. Unless otherwise indicated, support units on a level bed of crushed stone or gravel, graded from 1-inch (25-mm) sieve to No. 4 (4.75-mm) sieve and compacted to same density as adjacent undisturbed earth.

B. Elevations:
    1. Install handholes with bottom below the frost line, below grade.
    2. Handhole Covers: In paved areas and trafficways, set surface flush with finished grade. Set covers of other handholes 1 inch (25.4 mm) above finished grade.
    3. Where indicated, cast handhole cover frame integrally with handhole structure.

C. Drainage: Provide the following and coordinate with rock sump provided under manhole floor.
    1. Install grate drains in bottom of manholes where indicated.
    2. Install full size drain connection to entry hatch 1-1/2” welded drain couplings.

D. Manhole Access: Circular opening in manhole roof; sized to match cover size.
    1. Manholes with Fixed Ladders: Offset access opening from manhole centerlines to align with ladder.
    2. Install chimney, constructed of precast concrete collars and rings to support frame and cover and to connect cover with manhole roof opening. Provide moisture-tight masonry joints and waterproof grouting for cast-iron frame to chimney.

E. Waterproofing: After ducts have been connected and grouted, and before backfilling, waterproof openings, penetrations, joints and connections and touch up abrasions and scars. Waterproof exterior of manhole chimneys after mortar has cured at least three days.
    1. Waterproof joints, connections and openings with "Sikadur Combiflex" sealing system.
    2. For new manholes: Apply damp proofing to entire manhole with Henry HE 789 damp proof coating or equivalent.Coordinate first paragraph below with Drawings. Delete second option if nonmetallic cable racks are specified.

F. Hardware: Install removable hardware, including pulling eyes, cable stanchions, and cable arms, and insulators, as required for installation and support of cables and conductors and as indicated.

G. Fixed Manhole Ladders: Arrange to provide for safe entry with maximum clearance from cables and other items in manholes.

H. Field-Installed Bolting Anchors in Manholes and Concrete Handholes: Do not drill deeper than 3-7/8 inches (98 mm) for manholes and 2 inches (50.8 mm) for handholes, for anchor bolts installed in the field. Use a minimum of two anchors for each cable stanchion.

I. Warning Sign: Install "Confined Space Hazard" warning sign on the inside surface of each manhole cover.

3.07 GROUNDING

A. Ground underground ducts and utility structures according to Division 26 Section "Grounding and Bonding for Electrical Systems."

3.08 FIELD QUALITY CONTROL

A. Perform the following tests and inspections:
   1. Demonstrate capability and compliance with requirements on completion of installation of underground ducts and utility structures.
   2. Pull aluminum or wood test mandrel through duct to prove joint integrity and test for out-of-round duct. Test mandrel shall be not less than 12 inches (304.8 mm) long, and diameter shall not be less than 80 percent fill of duct. If obstructions are indicated, remove obstructions and retest.
   3. Test manhole and handhole grounding to ensure electrical continuity of grounding and bonding connections. Measure and report ground resistance as specified in Division 26 Section "Grounding and Bonding for Electrical Systems."

B. Correct deficiencies and retest as specified above to demonstrate compliance.

C. Prepare test and inspection reports.

3.09 CLEANING

A. Pull leather-washer-type duct cleaner, with graduated washer sizes, through full length of ducts. Follow with rubber duct swab for final cleaning and to assist in spreading lubricant throughout ducts.

B. Clean internal surfaces of manholes, including sump. Remove foreign material.

END OF SECTION 260543

This page intentionally left blank

SECTION 260548
VIBRATION AND SEISMIC CONTROLS FOR ELECTRICAL SYSTEMS

PART 1 GENERAL

1.01 REFERENCE STANDARDS

A. ASCE 7 - Minimum Design Loads and Associated Criteria for Buildings and Other Structures; Most Recent Edition Cited by Referring Code or Reference Standard.

1.02 RELATED DOCUMENTS

A. Drawings and general provisions of the Contract, including General and Supplementary Conditions and Division 01 Specification Sections, apply to this Section.

1.03 SUMMARY

A. This Section includes the following:
   1. Isolation pads.
   2. Spring isolators.
   3. Restrained spring isolators.
   4. Channel support systems.
   5. Restraint cables.
   6. Hanger rod stiffeners.
   7. Anchorage bushings and washers.

B. Related Sections include the following:
   1. Division 26 Section "Hangers And Supports For Electrical Systems" for commonly used electrical supports and installation requirements.

1.04 DEFINITIONS

A. The IBC: International Building Code.

B. ICC-ES: ICC-Evaluation Service.

1.05 PERFORMANCE REQUIREMENTS

A. Seismic-Restraint Loading: Refer to project Structural Drawings and Specifications for the following, as defined in the IBC:
   1. Site Class: As indicated in structural project documents
   2. Assigned Seismic Use Group or Building Category.
      a. Component Response Modification Factor: As indicated in structural project documents
      b. Component Amplification Factor: As indicated in structural project documents
   3. Design Spectral Response Acceleration at Short Periods (0.2 Second): As indicated in structural project documents
   4. Design Spectral Response Acceleration at 1.0-Second Period: As indicated in structural project documents

B. Component Importance Factor:
   1. In order to identify systems requiring seismic restraint and to define those from which restraints may be excluded, utility components are assigned an ASCE 7 Importance Factor (Ip) on the basis of the following:
      a. Ip = 1.5
         1) essential facilities required for post earthquake recovery – all components required for the continued operation of the facility.
         2) Life-safety components which are required to function after a seismic event including all equipment feeding and connected to the life safety branch of the electrical system.
         3) All equipment feeding and connected to the stand-by branch of the electrical system.
      b. All other components.

1.06 SUBMITTALS

A. Product Data: For the following:
   1. Include rated load, rated deflection, and overload capacity for each vibration isolation device.
   2. Illustrate and indicate style, material, strength, fastening provision, and finish for each type and size of seismic-restraint component used.
      a. Tabulate types and sizes of seismic restraints, complete with report numbers and rated strength in tension and shear as evaluated by an agency acceptable to authorities having jurisdiction.
      b. Annotate to indicate application of each product submitted and compliance with requirements.
   3. Restrained-Isolation Devices: Include ratings for horizontal, vertical, and combined loads.

B. Delegated-Design Submittal: For vibration isolation and seismic-restraint details indicated to comply with performance requirements and design criteria, including analysis data signed and sealed by the qualified professional engineer responsible for their preparation.
   1. Design Calculations: Calculate static and dynamic loading due to equipment weight and operation, seismic forces required to select vibration isolators and seismic restraints.
      a. Coordinate design calculations with wind-load calculations required for equipment mounted outdoors. Comply with requirements in other Division 26 Sections for equipment mounted outdoors.
   2. Provide Seismic Design Force calculations per ASCE 7- 02, Formulas 9.6.1.3-1 thru 9.6.1.3-3.
   3. Indicate materials and dimensions and identify hardware, including attachment and anchorage devices.
   4. Field-fabricated supports.
   5. Seismic-Restraint Details:
      a. Design Analysis: To support selection and arrangement of seismic restraints. Include calculations of combined tensile and shear loads.
      b. Details: Indicate fabrication and arrangement. Detail attachments of restraints to the restrained items and to the structure. Show attachment locations, methods, and spacings. Identify components, list their strengths, and indicate directions and values of forces transmitted to the structure during seismic events. Indicate association with vibration isolation devices.
      c. Preapproval and Evaluation Documentation: By an agency acceptable to authorities having jurisdiction, showing maximum ratings of restraint items and the basis for approval (tests or calculations).

C. Deferred Submittals for DFCM shall be as required by IBC 106.3.4.2.
   1. Deferred submittals of seismic restraint of nonstructural components must be submitted to the DFCM Building Official a minimum of two weeks prior to the planned installation in order to allow for plan review and forwarding to inspectors. In the event that the submittal is deficient additional time may become necessary.
   2. No deferred submittal element shall be installed until DFCM approval has been received.
   3. If seismic restraints of nonstructural components are installed prior to receiving DFCM approval they shall not be covered or concealed until plan review and inspection approval. Further, installers are proceeding at their own risk until plan review and inspection approval occurs.
   4. Deferred Submittals are required for:
      a. Electrical distribution equipment (switchgear, panelboards, transformers, MCC's etc.).
      b. Conduit racks.
      c. Cable trays.
      d. Lighting Concrete Pole Bases.

D. Coordination Drawings: Show coordination of seismic bracing for electrical components with other systems and equipment in the vicinity, including other supports and seismic restraints.

E. Welding certificates.

F. Qualification Data: For professional engineer.

G. Field quality-control test reports.

1.07 QUALITY ASSURANCE

A. Professional Engineer Qualifications: A professional engineer who is legally qualified to practice in jurisdiction where Project is located and who is experienced in providing seismic engineering services, including the design of seismic restraints, that are similar to those indicated for this Project.

B. Comply with seismic-restraint requirements in the IBC unless requirements in this Section are more stringent.

C. Seismic-restraint devices shall have horizontal and vertical load testing and analysis and shall bear anchorage preapproval OPA number from OSHPD, preapproval by ICC-ES, or preapproval by another agency acceptable to authorities having jurisdiction, showing maximum seismic-restraint ratings. Ratings based on independent testing are preferred to ratings based on calculations. If preapproved ratings are not available, submittals based on independent testing are preferred. Calculations (including combining shear and tensile loads) to support seismic-restraint designs must be signed and sealed by a qualified professional engineer.

D. Comply with NFPA 70.

PART 2 PRODUCTS

2.01 VIBRATION ISOLATORS

A. Manufacturers: Subject to compliance with requirements, provide products by one of the following:
   1. Ace Mountings Co., Inc.
   2. Amber/Booth Company, Inc.
   3. California Dynamics Corporation.
   4. Isolation Technology, Inc.
   5. Kinetics Noise Control.
   6. Mason Industries.
   7. Vibration Eliminator Co., Inc.
   8. Vibration Isolation.
   9. Vibration Mountings & Controls, Inc.

B. Pads: Arrange in single or multiple layers of sufficient stiffness for uniform loading over pad area, molded with a nonslip pattern and galvanized-steel baseplates, and factory cut to sizes that match requirements of supported equipment.
   1. Resilient Material: Oil- and water-resistant neoprene.

C. Spring Isolators: Freestanding, laterally stable, open-spring isolators.
   1. Outside Spring Diameter: Not less than 80 percent of the compressed height of the spring at rated load.
   2. Minimum Additional Travel: 50 percent of the required deflection at rated load.
   3. Lateral Stiffness: More than 80 percent of rated vertical stiffness.
   4. Overload Capacity: Support 200 percent of rated load, fully compressed, without deformation or failure.
   5. Baseplates: Factory drilled for bolting to structure and bonded to 1/4-inch- (6-mm-) thick, rubber isolator pad attached to baseplate underside. Baseplates shall limit floor load to 500 psig (3447.38 kPa).
   6. Top Plate and Adjustment Bolt: Threaded top plate with adjustment bolt and cap screw to fasten and level equipment.

D. Restrained Spring Isolators: Freestanding, steel, open-spring isolators with seismic or limit-stop restraint.
   1. Housing: Steel with resilient vertical-limit stops to prevent spring extension due to weight being removed; factory-drilled baseplate bonded to 1/4-inch- (6-mm-) thick, neoprene or rubber isolator pad attached to baseplate underside; and adjustable equipment mounting and leveling bolt that acts as blocking during installation.
   2. Restraint: Seismic or limit-stop as required for equipment and authorities having jurisdiction.
   3. Outside Spring Diameter: Not less than 80 percent of the compressed height of the spring at rated load.
   4. Minimum Additional Travel: 50 percent of the required deflection at rated load.
   5. Lateral Stiffness: More than 80 percent of rated vertical stiffness.
   6. Overload Capacity: Support 200 percent of rated load, fully compressed, without deformation or failure.

2.02 SEISMIC-RESTRAINT DEVICES

A. Manufacturers: Subject to compliance with requirements, provide products by one of the following:
   1. Amber/Booth Company, Inc.
   2. California Dynamics Corporation.
   3. Cooper B-Line, Inc.; a division of Cooper Industries.
   4. Hilti Inc.
   5. ISAT.
   6. Loos & Co.; Seismic Earthquake Division.
   7. Mason Industries.
   8. TOLCO Incorporated; a brand of NIBCO INC.
   9. Unistrut; Tyco International, Ltd.

B. General Requirements for Restraint Components: Rated strengths, features, and application requirements shall be as defined in reports by an agency acceptable to authorities having jurisdiction.
   1. Structural Safety Factor: Allowable strength in tension, shear, and pullout force of components shall be at least four times the maximum seismic forces to which they will be subjected.

C. Channel Support System: MFMA-3, shop- or field-fabricated support assembly made of slotted steel channels with accessories for attachment to braced component at one end and to building structure at the other end and other matching components and with corrosion-resistant coating; and rated in tension, compression, and torsion forces.

D. Restraint Cables: ASTM A 603 galvanized-steel cables with end connections made of steel assemblies with thimbles, brackets, swivels, and bolts designed for restraining cable service; and with a minimum of two clamping bolts for cable engagement.

E. Hanger Rod Stiffener: Steel tube or steel slotted-support-system sleeve with internally bolted connections to hanger rod. Do not weld stiffeners to rods.

F. Bushings for Floor-Mounted Equipment Anchor: Neoprene bushings designed for rigid equipment mountings, and matched to type and size of anchors and studs.

G. Bushing Assemblies for Wall-Mounted Equipment Anchorage: Assemblies of neoprene elements and steel sleeves designed for rigid equipment mountings, and matched to type and size of attachment devices.

H. Resilient Isolation Washers and Bushings: One-piece, molded, oil- and water-resistant neoprene, with a flat washer face.

I. Mechanical Anchor: Drilled-in and stud-wedge or female-wedge type in zinc-coated steel for interior applications and stainless steel for exterior applications. Select anchors with strength

required for anchor and as tested according to ASTM E 488. Minimum length of eight times diameter.

J. Adhesive Anchor: Drilled-in and capsule anchor system containing polyvinyl or urethane methacrylate-based resin and accelerator, or injected polymer or hybrid mortar adhesive. Provide anchor bolts and hardware with zinc-coated steel for interior applications and stainless steel for exterior applications. Select anchor bolts with strength required for anchor and as tested according to ASTM E 488.

2.03 FACTORY FINISHES

A. Finish: Manufacturer's standard paint applied to factory-assembled and -tested equipment before shipping.
   1. Powder coating on springs and housings.
   2. All hardware shall be galvanized. Hot-dip galvanize metal components for exterior use.
   3. Baked enamel or powder coat for metal components on isolators for interior use.
   4. Color-code or otherwise mark vibration isolation and seismic-control devices to indicate capacity range.

PART 3 EXECUTION

3.01 EXAMINATION

A. Examine areas and equipment to receive vibration isolation and seismic-control devices for compliance with requirements for installation tolerances and other conditions affecting performance.

B. Examine roughing-in of reinforcement and cast-in-place anchors to verify actual locations before installation.

C. Proceed with installation only after unsatisfactory conditions have been corrected.

3.02 APPLICATIONS

A. Multiple Raceways or Cables: Secure raceways and cables to trapeze member with clamps approved for application by an agency acceptable to authorities having jurisdiction.

B. Hanger Rod Stiffeners: Install hanger rod stiffeners where indicated or scheduled on Drawings to receive them and where required to prevent buckling of hanger rods due to seismic forces.

C. Strength of Support and Seismic-Restraint Assemblies: Where not indicated, select sizes of components so strength will be adequate to carry present and future static and seismic loads within specified loading limits.

3.03 SEISMIC-RESTRAINT DEVICE INSTALLATION

A. Equipment and Hanger Restraints:
   1. Install restrained isolators on electrical equipment.
   2. Install resilient, bolt-isolation washers on equipment anchor bolts where clearance between anchor and adjacent surface exceeds 0.125 inch (3.18 mm).
   3. Install seismic-restraint devices using methods approved by an agency acceptable to authorities having jurisdiction providing required submittals for component.

B. Install bushing assemblies for mounting bolts for wall-mounted equipment, arranged to provide resilient media where equipment or equipment-mounting channels are attached to wall.

C. Attachment to Structure: If specific attachment is not indicated, anchor bracing to structure at flanges of beams, at upper truss chords of bar joists, or at concrete members.

D. Drilled-in Anchors:
   1. Identify position of reinforcing steel and other embedded items prior to drilling holes for anchors. Do not damage existing reinforcing or embedded items during coring or drilling. Notify the structural engineer if reinforcing steel or other embedded items are encountered during drilling. Locate and avoid prestressed tendons, electrical and telecommunications conduit, and gas lines.

2. Do not drill holes in concrete or masonry until concrete, mortar, or grout has achieved full design strength.
3. Wedge Anchors: Protect threads from damage during anchor installation. Heavy-duty sleeve anchors shall be installed with sleeve fully engaged in the structural element to which anchor is to be fastened.
4. Adhesive Anchors: Clean holes to remove loose material and drilling dust prior to installation of adhesive. Place adhesive in holes proceeding from the bottom of the hole and progressing toward the surface in such a manner as to avoid introduction of air pockets in the adhesive.
5. Set anchors to manufacturer's recommended torque, using a torque wrench.
6. Install zinc-coated steel anchors for interior and stainless-steel anchors for exterior applications.

3.04 ACCOMMODATION OF DIFFERENTIAL SEISMIC MOTION

INSTALL FLEXIBLE CONNECTIONS IN RUNS OF RACEWAYS, CABLES, WIREWAYS, CABLE TRAYS, AND BUSWAYS WHERE THEY CROSS SEISMIC JOINTS, WHERE ADJACENT SECTIONS OR BRANCHES ARE SUPPORTED BY DIFFERENT STRUCTURAL ELEMENTS, AND WHERE THEY TERMINATE WITH CONNECTION TO EQUIPMENT THAT IS ANCHORED TO A DIFFERENT STRUCTURAL ELEMENT FROM THE ONE SUPPORTING THEM AS THEY APPROACH EQUIPMENT.

4.01 ADJUSTING

A. Adjust isolators after isolated equipment is at operating weight.

B. Adjust limit stops on restrained spring isolators to mount equipment at normal operating height. After equipment installation is complete, adjust limit stops so they are out of contact during normal operation.

C. Adjust active height of spring isolators.

D. Adjust restraints to permit free movement of equipment within normal mode of operation.

4.02 SPECIAL INSPECTION

A. Quality Assurance Plan.

END OF SECTION 260548

SECTION 260553
IDENTIFICATION FOR ELECTRICAL SYSTEMS

PART 1 GENERAL

1.01 RELATED DOCUMENTS

A. Drawings and general provisions of the Contract, including General and Supplementary Conditions and Division 01 Specification Sections, apply to this Section.

1.02 SUMMARY

A. Section Includes:
   1. Identification for raceways.
   2. Identification of power and control cables.
   3. Identification for conductors.
   4. Underground-line warning tape.
   5. Warning labels and signs.
   6. Instruction signs.
   7. Equipment identification labels.
   8. Miscellaneous identification products.

1.03 SUBMITTALS

A. Not Required.

1.04 QUALITY ASSURANCE

A. Comply with ANSI A13.1.

B. Comply with NFPA 70.

C. Comply with 29 CFR 1910.144 and 29 CFR 1910.145.

D. Comply with ANSI Z535.4 for safety signs and labels.

E. Adhesive-attached labeling materials, including label stocks, laminating adhesives, and inks used by label printers, shall comply with UL 969.

1.05 COORDINATION

A. Coordinate identification names, abbreviations, colors, and other features with requirements in other Sections requiring identification applications, Drawings, Shop Drawings, manufacturer's wiring diagrams, and the Operation and Maintenance Manual; and with those required by codes, standards, and 29 CFR 1910.145. Use consistent designations throughout Project.

B. Coordinate installation of identifying devices with completion of covering and painting of surfaces where devices are to be applied.

C. Coordinate installation of identifying devices with location of access panels and doors.

D. Install identifying devices before installing acoustical ceilings and similar concealment.

PART 2 PRODUCTS

2.01 POWER RACEWAY IDENTIFICATION MATERIALS

A. Comply with ANSI A13.1 for minimum size of letters for legend and for minimum length of color field for each raceway size.

B. Colors for Raceways Carrying Circuits at More Than 600 V (where exposed):
   1. White letters on painted red raceways.
   2. Legend: "DANGER HIGH VOLTAGE WIRING" with 3-inch- (75-mm-) high letters on 20-inch (500-mm) centers.

2.02 POWER AND CONTROL CABLE IDENTIFICATION MATERIALS

A. Comply with ANSI A13.1 for minimum size of letters for legend and for minimum length of color field for each raceway and cable size.

B. Self-Adhesive Vinyl Labels: Preprinted, flexible label laminated with a clear, weather- and chemical-resistant coating and matching wraparound adhesive tape for securing ends of legend label.

C. Write-On Tags: Polyester tag, 0.010 inch (0.25 mm) thick, with corrosion-resistant grommet and cable tie for attachment to conductor or cable.
   1. Marker for Tags: Machine-printed, permanent, waterproof, black ink marker recommended by printer manufacturer.

2.03 CONDUCTOR IDENTIFICATION MATERIALS

A. Color-Coding Conductor Tape: Colored, self-adhesive vinyl tape not less than 3 mils (0 inch (0.08 mm)) thick by 1 to 2 inches (25 to 50 mm) wide.

B. Self-Adhesive Vinyl Labels: Preprinted, flexible label laminated with a clear, weather- and chemical-resistant coating and matching wraparound adhesive tape for securing ends of legend label.

C. Marker Tapes: Vinyl or vinyl-cloth, self-adhesive wraparound type, with circuit identification legend machine printed by thermal transfer or equivalent process.

D. Write-On Tags: Polyester tag, 0.010 inch (0.25 mm) thick, with corrosion-resistant grommet and cable tie for attachment to conductor or cable.
   1. Marker for Tags: Machine-printed, permanent, waterproof, black ink marker recommended by printer manufacturer.

2.04 UNDERGROUND-LINE WARNING TAPE

A. Tape:
   1. Recommended by manufacturer for the method of installation and suitable to identify and locate underground electrical and communications utility lines.
   2. Printing on tape shall be permanent and shall not be damaged by burial operations.
   3. Tape material and ink shall be chemically inert, and not subject to degrading when exposed to acids, alkalis, and other destructive substances commonly found in soils.
   4. Detectable three-layer laminate, consisting of a printed pigmented polyolefin film, a solid aluminum-foil core, and a clear protective film that allows inspection of the continuity of the conductive core, bright-colored, continuous-printed on one side with the inscription of the utility, compounded for direct-burial service.
   5. Overall Thickness: 5 mils (0 inch (0.12 mm)).
   6. Foil Core Thickness: 0.35 mil (0.00889 mm).
   7. Weight: 28 lb/1000 sq. ft. (13.7 kg/100 sq. m).
   8. 3-Inch (75-mm) Tensile According to ASTM D 882: 70 lbf (311.3 N), and 4600 psi (31715.90 kPa).

B. Color and Printing:
   1. Comply with ANSI Z535.1 through ANSI Z535.5.
   2. Inscriptions for Red-Colored Tapes: ELECTRIC LINE, HIGH VOLTAGE,.
   3. Inscriptions for Orange-Colored Tapes: TELEPHONE CABLE, CATV CABLE, COMMUNICATIONS CABLE, OPTICAL FIBER CABLE.

2.05 WARNING LABELS AND SIGNS

A. Comply with NFPA 70 and 29 CFR 1910.145.

B. Self-Adhesive Warning Labels: Factory-printed, multicolor, pressure-sensitive adhesive labels, configured for display on front cover, door, or other access to equipment unless otherwise indicated.

C. Baked-Enamel Warning Signs:
   1. Preprinted aluminum signs, punched or drilled for fasteners, with colors, legend, and size required for application.
   2. 1/4-inch (6.4-mm) grommets in corners for mounting.
   3. Nominal size, 7 by 10 inches (180 by 250 mm).

D. Metal-Backed, Butyrate Warning Signs:
   1. Weather-resistant, nonfading, preprinted, cellulose-acetate butyrate signs with 0.0396-inch (1-mm) galvanized-steel backing; and with colors, legend, and size required for application.
   2. 1/4-inch (6.4-mm) grommets in corners for mounting.
   3. Nominal size, 10 by 14 inches (250 by 360 mm).

E. Warning label and sign shall include, but are not limited to, the following legends:
   1. Multiple Power Source Warning: "DANGER - ELECTRICAL SHOCK HAZARD - EQUIPMENT HAS MULTIPLE POWER SOURCES."
   2. Workspace Clearance Warning: "WARNING - OSHA REGULATION - AREA IN FRONT OF ELECTRICAL EQUIPMENT MUST BE KEPT CLEAR FOR 48 INCHES (1200 MM)."

2.06 INSTRUCTION SIGNS

A. Engraved, laminated acrylic or melamine plastic, minimum 1/16 inch (1.59 mm) thick for signs up to 20 sq. inches (129 sq. cm) and 1/8 inch (3.18 mm) thick for larger sizes.
   1. Engraved legend with black letters on white face.
   2. Punched or drilled for mechanical fasteners.
   3. Framed with mitered acrylic molding and arranged for attachment at applicable equipment.

B. Adhesive Film Label: Machine printed, in black, by thermal transfer or equivalent process. Minimum letter height shall be 3/8 inch (9.52 mm).

C. Adhesive Film Label with Clear Protective Overlay: Machine printed, in black, by thermal transfer or equivalent process. Minimum letter height shall be 3/8 inch (9.52 mm). Overlay shall provide a weatherproof and UV-resistant seal for label.

2.07 EQUIPMENT IDENTIFICATION LABELS

A. Engraved, Laminated Acrylic or Melamine Label: Punched or drilled for screw mounting. White letters on a dark-gray background. Minimum letter height shall be 3/8 inch (9.52 mm).

B. Stenciled Legend: In nonfading, waterproof, black ink or paint. Minimum letter height shall be 1 inch (25.4 mm).

2.08 CABLE TIES

A. Plenum-Rated Cable Ties: Self extinguishing, UV stabilized, one piece, self locking.
   1. Minimum Width: 3/16 inch (4.76 mm).
   2. Tensile Strength at 73 deg F (23 deg C), According to ASTM D 638: 7000 psi (48263.32 kPa).
   3. UL 94 Flame Rating: 94V-0.
   4. Temperature Range: Minus 50 to plus 284 deg F (Minus 46 to plus 140 deg C).

2.09 COLOR: BLACK. MISCELLANEOUS IDENTIFICATION PRODUCTS

A. Paint: Comply with requirements in Division 09 painting Sections for paint materials and application requirements. Select paint system applicable for surface material and location (exterior or interior).

B. Fasteners for Labels and Signs: Self-tapping, stainless-steel screws or stainless-steel machine screws with nuts and flat and lock washers.

PART 3 EXECUTION

3.01 INSTALLATION

A. Verify identity of each item before installing identification products.

B. Location: Install identification materials and devices at locations for most convenient viewing without interference with operation and maintenance of equipment.

C. Apply identification devices to surfaces that require finish after completing finish work.

D. Self-Adhesive Identification Products: Clean surfaces before application, using materials and methods recommended by manufacturer of identification device.

E. Attach signs and plastic labels that are not self-adhesive type with mechanical fasteners appropriate to the location and substrate.

F. System Identification Color-Coding Bands for Raceways and Cables: Each color-coding band shall completely encircle cable or conduit. Place adjacent bands of two-color markings in contact, side by side. Locate bands at changes in direction, at penetrations of walls and floors, at 50-foot (15-m) maximum intervals in straight runs, and at 25-foot (7.6-m) maximum intervals in congested areas.

G. Aluminum Wraparound Marker Labels and Metal Tags: Secure tight to surface of conductor or cable at a location with high visibility and accessibility.

H. Cable Ties: For attaching tags. Use general-purpose type, except as listed below:
   1. Outdoors: UV-stabilized nylon.
   2. In Spaces Handling Environmental Air: Plenum rated.

I. Underground-Line Warning Tape: During backfilling of trenches install continuous underground-line warning tape directly above line at 6 to 8 inches (150 to 200 mm) below finished grade. Use multiple tapes where width of multiple lines installed in a common trench or concrete envelope exceeds 16 inches (406.4 mm) overall.

J. Painted Identification: Comply with requirements in Division 09 painting Sections for surface preparation and paint application.

3.02 IDENTIFICATION SCHEDULE

A. Concealed Raceways, Duct Banks, More Than 600 V, within Buildings: Tape and stencil 4-inch- (100-mm-) wide black stripes on 10-inch (250-mm) centers over orange background that extends full length of raceway or duct and is 12 inches (304.8 mm) wide. Stencil legend "DANGER CONCEALED HIGH VOLTAGE WIRING" with 3-inch- (75-mm-) high black letters on 20-inch (500-mm) centers. Stop stripes at legends. Apply to the following finished surfaces:
   1. Floor surface directly above conduits running beneath and within 12 inches (304.8 mm) of a floor that is in contact with earth or is framed above unexcavated space.
   2. Wall surfaces directly external to raceways concealed within wall.
   3. Accessible surfaces of concrete envelope around raceways in vertical shafts, exposed in the building, or concealed above suspended ceilings.

B. Accessible Raceways, Armored and Metal-Clad Cables, More Than 600 V: Snap-around labels. Install labels at 30-foot (10-m) maximum intervals.

C. Accessible Raceways and Cables within Buildings: Identify the covers of each junction and pull box of the following systems with self-adhesive vinyl labels with the wiring system legend and system voltage. System legends shall be as follows:
   1. Emergency Power.
   2. Power.
   3. UPS.

D. Power-Circuit Conductor Identification, 600 V or Less: For conductors in vaults, pull and junction boxes, manholes, and handholes, use color-coding conductor tape to identify the phase.
   1. Color-Coding for Phase and Voltage Level Identification, 600 V or Less: Use colors listed below for ungrounded service, feeder and branch-circuit conductors. Color coding is based on clockwise rotation.
      a. Conductors No. 6 AWG and below shall be color coded with colored insulation. Larger sizes may be identified by field-applied color-coding conductor tape.
      b. Colors for 208/120-V Circuits:
         1) Phase A: Black.
         2) Phase B: Red.

3) Phase C: Blue.
4) Neutral: White.
5) Neutral A: White w/ Black Stripe.
6) Neutral B: White w/ Red Stripe.
7) Neutral C: White w/ Blue Stripe.
8) Ground: Green.

c. Colors for 480/277-V Circuits:
1) Phase A: Brown.
2) Phase B: Yellow.
3) Phase C: Violet.
4) Neutral: Grey.
5) Neutral A: Gray w/ Black Stripe.
6) Neutral A: Gray w/ Orange Stripe.
7) Neutral A: Gray w/ Yellow Stripe.
8) Ground: Green.

d. Field-Applied, Color-Coding Conductor Tape: Apply in half-lapped turns for a minimum distance of 6 inches (152.4 mm) from terminal points and in boxes where splices or taps are made. Apply last two turns of tape with no tension to prevent possible unwinding. Locate bands to avoid obscuring factory cable markings.

E. Power-Circuit Conductor Identification, More than 600 V: For conductors in vaults, pull and junction boxes, manholes, and handholes, use write-on tags.
1. For HV cable in each manhole or transformer vault via a permanently installed metal tag and colored tape. Tag cables with feeder number and identification at all visible points on phase B. Phasing will be consistent with the rest of the system and shall be marked as follows:
a. Phase 1: Black.
b. Phase 2: Red.
c. Phase 3: Blue.

F. Install instructional sign including the color-code for grounded and ungrounded conductors using adhesive-film-type labels.

G. Conductors to Be Extended in the Future: Attach write-on tags to conductors and list source.

H. Auxiliary Electrical Systems Conductor Identification: Identify field-installed alarm, control, and signal connections.
1. Identify conductors, cables, and terminals in enclosures and at junctions, terminals, and pull points. Identify by system and circuit designation.
2. Use system of marker tape designations that is uniform and consistent with system used by manufacturer for factory-installed connections.
3. Coordinate identification with Project Drawings, manufacturer's wiring diagrams, and the Operation and Maintenance Manual.

I. Locations of Underground Lines: Identify with underground-line warning tape for power, lighting, communication, and control wiring and optical fiber cable.
1. Install underground-line warning tape for both direct-buried cables and cables in raceway.

J. Workspace Indication: Install floor marking tape to show working clearances in the direction of access to live parts. Workspace shall be as required by NFPA 70 and 29 CFR 1926.403 unless otherwise indicated. Do not install at flush-mounted panelboards and similar equipment in finished spaces.

K. Warning Labels for Indoor Cabinets, Boxes, and Enclosures for Power and Lighting: Self-adhesive warning labels.
1. Comply with 29 CFR 1910.145.
2. Identify system voltage with black letters on an orange background.
3. Apply to exterior of door, cover, or other access.

4. For equipment with multiple power or control sources, apply to door or cover of equipment including, but not limited to, the following:
    a. Power transfer switches.
    b. Controls with external control power connections.

L. Operating Instruction Signs: Install instruction signs to facilitate proper operation and maintenance of electrical systems and items to which they connect. Install instruction signs with approved legend where instructions are needed for system or equipment operation.

M. Emergency Operating Instruction Signs: Install instruction signs with white legend on a red background with minimum 3/8-inch- (10-mm-) high letters for emergency instructions at equipment used for power transfer.

N. Equipment Identification Labels: On each unit of equipment, install unique designation label that is consistent with wiring diagrams, schedules, and the Operation and Maintenance Manual. Apply labels to disconnect switches and protection equipment, central or master units, control panels, control stations, terminal cabinets, and racks of each system. Systems include power, lighting, control, communication, signal, monitoring, and alarm systems unless equipment is provided with its own identification.
    1. Labeling Instructions:
        a. Indoor Equipment: Engraved, laminated acrylic or melamine label. Unless otherwise indicated, provide a single line of text with 1/2-inch- (13-mm-) high letters on 1-1/2-inch- (38-mm-) high label; where two lines of text are required, use labels 2 inches (50.8 mm) high.
        b. Outdoor Equipment: Engraved, laminated acrylic or melamine label stenciled legend 4 inches (101.6 mm) high.
        c. Elevated Components: Increase sizes of labels and letters to those appropriate for viewing from the floor.
        d. Unless provided with self-adhesive means of attachment, fasten labels with appropriate mechanical fasteners that do not change the NEMA or NRTL rating of the enclosure.
    2. Equipment to Be Labeled:
        a. Enclosures and electrical cabinets.
        b. Access doors and panels for concealed electrical items.
        c. Switchgear.
        d. Switchboards.
        e. Transformers: Label that includes tag designation shown on Drawings for the transformer, feeder, and panelboards or equipment supplied by the secondary.
        f. Substations.
        g. Emergency system boxes and enclosures.
        h. Enclosed switches.
        i. Enclosed circuit breakers.
        j. Push-button stations.
        k. Power transfer equipment.
        l. Contactors.
        m. Monitoring and control equipment.

3.03 IDENTIFICATION REQUIREMENTS FOR MEDIUM-VOLTAGE INSTALLATIONS

A. Labeling & ID Tags
    1. General Requirements
        a. install appropriate labels and tags throughout the project’s electrical system as directed by USU electric shop.
        b. The purpose of the labels and tags is to provide clear indications of the function of each item, the loads served, routing information, etc., for primary and secondary elements comprising the electrical system.
    2. Permanently Engraved Lamicoid Nameplates

a. Specify permanently engraved nameplates, labels, or ID tags for a master nameplate, also for manholes, distribution equipment, devices, etc.
b. Lamicoid nameplates shall be three-ply plastic, 1/16 inch (1.59 mm) thick. Letters shall be formed by engraving into the outer colored ply, exposing the white or black center-ply. Lettering shall be a minimum of 5/8 inch (15.88 mm) high, except for MV cable.

END OF SECTION 260553

This page intentionally left blank

SECTION 260574
OVERCURRENT PROTECTIVE DEVICE AND ARC-FLASH STUDY

PART 1 GENERAL

1.01 REFERENCE STANDARDS

A. IEEE 241 - IEEE Recommended Practice for Electric Power Systems in Commercial Buildings; 1990 (Reaffirmed 1997).

B. IEEE 551 - IEEE Recommended Practice for Calculating Short-Circuit Currents in Industrial and Commercial Power Systems; 2006.

1.02 RELATED DOCUMENTS

A. Drawings and general provisions of the Contract, including General and Supplementary Conditions and Division 01 Specification Sections, apply to this Section.

1.03 SUMMARY

A. Section includes a computer-based, arc-flash study to determine the arc-flash hazard distance and the incident energy to which personnel could be exposed during work on or near electrical equipment.

B. Section includes computer-based, overcurrent protective device coordination studies to determine overcurrent protective devices and to determine overcurrent protective device settings for selective tripping.
   1. Study results shall be used to determine coordination of series-rated devices.

1.04 DEFINITIONS

A. Existing to Remain: Existing items of construction that are not to be removed and that are not otherwise indicated to be removed, removed and salvaged, or removed and reinstalled.

B. One-Line Diagram: A diagram which shows, by means of single lines and graphic symbols, the course of an electric circuit or system of circuits and the component devices or parts used therein.

C. Protective Device: A device that senses when an abnormal current flow exists and then removes the affected portion from the system.

D. SCCR: Short-circuit current rating.

E. Service: The conductors and equipment for delivering electric energy from the serving utility to the wiring system of the premises served.

1.05 ACTION SUBMITTALS

A. Product Data: For computer software program to be used for studies.
   1. Coordination-study input data, including completed computer program input data sheets.
   2. Study and equipment evaluation reports.
   3. Overcurrent protective device coordination study report; signed, dated, and sealed by a qualified professional engineer.
   4. Arc-flash study input data, including completed computer program input data sheets.
   5. Arc-flash study report; signed, dated, and sealed by a qualified professional engineer.
      a. Submit study report for action prior to receiving final approval of the distribution equipment submittals. If formal completion of studies will cause delay in equipment manufacturing, obtain approval from Architect for preliminary submittal of sufficient study data to ensure that the selection of devices and associated characteristics is satisfactory.

1.06 INFORMATIONAL SUBMITTALS

A. Product Certificates: For arc-flash hazard analysis software, certifying compliance with IEEE 1584 and NFPA 70E.

1.07 CLOSEOUT SUBMITTALS

A. Maintenance procedures according to requirements in NFPA 70E shall be provided in the equipment manuals.

B. Operation and Maintenance Procedures: In addition to items specified in Section 017823 "Operation and Maintenance Data," provide maintenance procedures for use by Owner's personnel that comply with requirements in NFPA 70E.
   1. In addition to items specified in Section 017823 "Operation and Maintenance Data," include the following:
      a. The following parts from the Protective Device Coordination Study Report:
         1) One-line diagram.
         2) Protective device coordination study.
         3) Time-current coordination curves.
      b. Power system data.

1.08 QUALITY ASSURANCE

A. Studies shall use computer programs that are distributed nationally and are in wide use. Software algorithms shall comply with requirements of standards and guides specified in this Section. Manual calculations are unacceptable.

B. Study Software Developer Qualifications: An entity that owns and markets computer software used for studies, having performed successful studies of similar magnitude on electrical distribution systems using similar devices.
   1. The computer program shall be developed under the charge of a licensed professional engineer who holds IEEE Computer Society's Certified Software Development Professional certification.

C. Study Specialist Qualifications: Professional engineer in charge of performing the study, analyzing the arc flash, and documenting recommendations, licensed in the state where Project is located. All elements of the study shall be performed under the direct supervision and control of this professional engineer.

D. Field Adjusting Agency Qualifications: An independent agency, with the experience and capability to adjust overcurrent devices and to conduct the testing indicated, that is a member company of the InterNational Electrical Testing Association or is a nationally recognized testing laboratory (NRTL) as defined by OSHA in 29 CFR 1910.7, and that is acceptable to authorities having jurisdiction.

PART 2 PRODUCTS

2.01 COMPUTER SOFTWARE DEVELOPERS

A. Software Developers: Subject to compliance with requirements, provide software by the following:
   1. SKM Systems Analysis, Inc.

B. Comply with IEEE 1584 and NFPA 70E.

C. Comply with IEEE 242 and IEEE 399.

D. Analytical features of device coordination study computer software program shall have the capability to calculate "mandatory," "very desirable," and "desirable" features as listed in IEEE 399.

E. Computer software program shall be capable of plotting and diagramming time-current-characteristic curves as part of its output. Computer software program shall report device settings and ratings of all overcurrent protective devices and shall demonstrate selective coordination by computer-generated, time-current coordination plots.
   1. Optional Features:
      a. Arcing faults.
      b. Simultaneous faults.

c. Explicit negative sequence.
d. Mutual coupling in zero sequence.

2.02 SHORT-CIRCUIT STUDY REPORT CONTENT

A. Executive summary.

B. Study descriptions, purpose, basis and scope.

C. One-line diagram, showing the following:
1. Protective device designations and ampere ratings.
2. Cable size and lengths.
3. Transformer kilovolt ampere (kVA) and voltage ratings.
4. Motor and generator designations and kVA ratings.
5. Switchgear, switchboard, motor-control center and panelboard designations.

D. Study Input Data: As described in "Power System Data" Article.

E. Short-Circuit Study Output:
1. Interrupting Duty Report: Three-phase and unbalanced fault calculations, showing the following for each overcurrent device location:
a. Voltage.
b. Calculated symmetrical fault-current magnitude and angle.
c. Fault-point X/R ratio.
d. No AC Decrement (NACD) ratio.
e. Equivalent impedance.
f. Multiplying factors for 2-, 3-, 5-, and 8-cycle circuit breakers rated on a symmetrical basis.
g. Multiplying factors for 2-, 3-, 5-, and 8-cycle circuit breakers rated on a total basis.

F. Incident Energy and Flash Protection Boundary Calculations:
1. Arcing fault magnitude.
2. Protective device clearing time.
3. Duration of arc.
4. Arc-flash boundary.
5. Working distance.
6. Incident energy.
7. Hazard risk category.
8. Recommendations for arc-flash energy reduction.

G. Fault study input data, case descriptions, and fault-current calculations including a definition of terms and guide for interpretation of the computer printout.

2.03 PROTECTIVE DEVICE COORDINATION STUDY REPORT CONTENTS

A. Executive summary.

B. Study descriptions, purpose, basis and scope. Include case descriptions, definition of terms and guide for interpretation of the computer printout.

C. One-line diagram, showing the following:
1. Protective device designations and ampere ratings.
2. Cable size and lengths.
3. Transformer kilovolt ampere (kVA) and voltage ratings.
4. Motor and generator designations and kVA ratings.
5. Switchgear, switchboard, motor-control center, and panelboard designations.

D. Study Input Data: As described in "Power System Data" Article.

E. Short-Circuit Study:
1. Low-Voltage Fault Report: Three-phase and unbalanced fault calculations, showing the following for each overcurrent device location:

a. Voltage.
b. Calculated fault-current magnitude and angle.
c. Fault-point X/R ratio.
d. Equivalent impedance.

2. Momentary Duty Report: Three-phase and unbalanced fault calculations, showing the following for each overcurrent device location:
   a. Voltage.
   b. Calculated symmetrical fault-current magnitude and angle.
   c. Fault-point X/R ratio.
   d. Calculated asymmetrical fault currents:
      1) Based on fault-point X/R ratio.
      2) Based on calculated symmetrical value multiplied by 1.6.
      3) Based on calculated symmetrical value multiplied by 2.7.
3. Interrupting Duty Report: Three-phase and unbalanced fault calculations, showing the following for each overcurrent device location:
   a. Voltage.
   b. Calculated symmetrical fault-current magnitude and angle.
   c. Fault-point X/R ratio.
   d. No AC Decrement (NACD) ratio.
   e. Equivalent impedance.
   f. Multiplying factors for 2-, 3-, 5-, and 8-cycle circuit breakers rated on a symmetrical basis.
   g. Multiplying factors for 2-, 3-, 5-, and 8-cycle circuit breakers rated on a total basis.

F. Protective Device Coordination Study:
1. Report recommended settings of protective devices, ready to be applied in the field. Use manufacturer's data sheets for recording the recommended setting of overcurrent protective devices when available.
   a. Phase and Ground Relays:
      1) Device tag.
      2) Relay current transformer ratio and tap, time dial, and instantaneous pickup value.
      3) Recommendations on improved relaying systems, if applicable.
   b. Circuit Breakers:
      1) Adjustable pickups and time delays (long time, short time, ground).
      2) Adjustable time-current characteristic.
      3) Adjustable instantaneous pickup.
      4) Recommendations on improved trip systems, if applicable.
   c. Fuses: Show current rating, voltage, and class.

G. Time-Current Coordination Curves: Determine settings of overcurrent protective devices to achieve selective coordination. Graphically illustrate that adequate time separation exists between devices installed in series, including power utility company's upstream devices. Prepare separate sets of curves for the switching schemes and for emergency periods where the power source is local generation. Show the following information:
1. Device tag and title, one-line diagram with legend identifying the portion of the system covered.
2. Terminate device characteristic curves at a point reflecting maximum symmetrical or asymmetrical fault current to which the device is exposed.
3. Identify the device associated with each curve by manufacturer type, function, and, if applicable, tap, time delay, and instantaneous settings recommended.
4. Plot the following listed characteristic curves, as applicable:
   a. Power utility's overcurrent protective device.
   b. Medium-voltage equipment overcurrent relays.

c. Medium- and low-voltage fuses including manufacturer's minimum melt, total clearing, tolerance, and damage bands.
d. Low-voltage equipment circuit-breaker trip devices, including manufacturer's tolerance bands.
e. Transformer full-load current, magnetizing inrush current, and ANSI through-fault protection curves.
f. Cables and conductors damage curves.
g. Ground-fault protective devices.
h. Motor-starting characteristics and motor damage points.
i. Generator short-circuit decrement curve and generator damage point.
j. The largest feeder circuit breaker in each motor-control center and panelboard.

5. Series rating on equipment allows the application of two series interrupting devices for a condition where the available fault current is greater than the interrupting rating of the downstream equipment. Both devices share in the interruption of the fault and selectivity is sacrificed at high fault levels. Maintain selectivity for tripping currents caused by overloads.
6. Provide adequate time margins between device characteristics such that selective operation is achieved.
7. Comments and recommendations for system improvements.

2.04 ARC-FLASH WARNING LABELS

A. Comply with requirements in Section 260553 "Identification for Electrical Systems." Produce a 3.5-by-5-inch (76-by-127-mm) thermal transfer label of high-adhesion polyester for each work location included in the analysis.

B. The label shall have an orange header with the wording, "WARNING, ARC-FLASH HAZARD," and shall include the following information taken directly from the arc-flash hazard analysis:
1. Location designation.
2. Nominal voltage.
3. Flash protection boundary.
4. Hazard risk category.
5. Incident energy.
6. Working distance.
7. Engineering report number, revision number, and issue date.

C. Labels shall be machine printed, with no field-applied markings.

PART 3 EXECUTION

3.01 EXAMINATION

A. Examine Project overcurrent protective device submittals. Proceed with arc-flash study only after relevant equipment submittals have been assembled. Overcurrent protective devices that have not been submitted and approved prior to arc-flash study may not be used in study.

3.02 SHORT-CIRCUIT STUDY

A. Perform study following the general study procedures contained in IEEE 399.

B. Calculate short-circuit currents according to IEEE 551.

C. Base study on the device characteristics supplied by device manufacturer.

D. The extent of the electrical power system to be studied is indicated on Drawings.

E. Begin analysis at the service, extending down to the system overcurrent protective devices as follows:
1. To normal system low-voltage load buses where fault current is 10 kA or less.
2. Exclude equipment rated 240-V ac or less when supplied by a single transformer rated less than 125 kVA.

F. Study electrical distribution system from normal and alternate power sources throughout electrical distribution system for Project. Include studies of system-switching configurations and alternate operations that could result in maximum fault conditions.

G. The calculations shall include the ac fault-current decay from induction motors, synchronous motors, and asynchronous generators and shall apply to low- and medium-voltage, three-phase ac systems.

H. Calculate short-circuit momentary and interrupting duties for a three-phase bolted fault and single line-to-ground fault at each of the following:
1. Electric utility's supply termination point.
2. Switchgear.
3. Unit substation primary and secondary terminals.
4. Low-voltage switchgear.
5. Motor-control centers.
6. Standby generators and automatic transfer switches.
7. Branch circuit panelboards.

3.03 PROTECTIVE DEVICE COORDINATION STUDY

A. Comply with IEEE 242 for calculating short-circuit currents and determining coordination time intervals.

B. Comply with IEEE 399 for general study procedures.

C. The study shall be based on the device characteristics supplied by device manufacturer.

D. The extent of the electrical power system to be studied is indicated on Drawings.

E. Begin analysis at the service, extending down to the system overcurrent protective devices as follows:
1. To normal system low-voltage load buses where fault current is 10 kA or less.
2. Exclude equipment rated 240-V ac or less when supplied by a single transformer rated less than 125 kVA.

F. Study electrical distribution system from normal and alternate power sources throughout electrical distribution system for Project. Study all cases of system-switching configurations and alternate operations that could result in maximum fault conditions.

G. Transformer Primary Overcurrent Protective Devices:
1. Device shall not operate in response to the following:
a. Inrush current when first energized.
b. Self-cooled, full-load current or forced-air-cooled, full-load current, whichever is specified for that transformer.
c. Permissible transformer overloads according to IEEE C57.96 if required by unusual loading or emergency conditions.
2. Device settings shall protect transformers according to IEEE C57.12.00, for fault currents.

H. Motor Protection:
1. Select protection for low-voltage motors according to IEEE 242 and NFPA 70.
2. Select protection for motors served at voltages more than 600 V according to IEEE 620.

I. Conductor Protection: Protect cables against damage from fault currents according to ICEA P-32-382, ICEA P-45-482, and protection recommendations in IEEE 242. Demonstrate that equipment withstands the maximum short-circuit current for a time equivalent to the tripping time of the primary relay protection or total clearing time of the fuse. To determine temperatures that damage insulation, use curves from cable manufacturers or from listed standards indicating conductor size and short-circuit current.

J. Generator Protection: Select protection according to manufacturer's written recommendations and to IEEE 242.

K. The calculations shall include the ac fault-current decay from induction motors, synchronous motors, and asynchronous generators and shall apply to low- and medium-voltage, three-phase ac systems. The calculations shall also account for the fault-current dc decrement, to address the asymmetrical requirements of the interrupting equipment.
   1. For grounded systems, provide a bolted line-to-ground fault-current study for areas as defined for the three-phase bolted fault short-circuit study.

L. Calculate short-circuit momentary and interrupting duties for a three-phase bolted fault and single line-to-ground fault at each of the following:
   1. Electric utility's supply termination point.
   2. Switchgear.
   3. Unit substation primary and secondary terminals.
   4. Low-voltage switchgear.
   5. Motor-control centers.
   6. Standby generators and automatic transfer switches.
   7. Branch circuit panelboards.

M. Protective Device Evaluation:
   1. Evaluate equipment and protective devices and compare to short-circuit ratings.
   2. Adequacy of switchgear, motor-control centers, and panelboard bus bars to withstand short-circuit stresses.
   3. Any application of series-rated devices shall be recertified, complying with requirements in NFPA 70.

3.04 LOAD-FLOW AND VOLTAGE-DROP STUDY

A. Perform a load-flow and voltage-drop study to determine the steady-state loading profile of the system. Analyze power system performance two times as follows:
   1. Determine load-flow and voltage drop based on full-load currents obtained in "Power System Data" Article.
   2. Determine load-flow and voltage drop based on 80 percent of the design capacity of the load buses.
   3. Prepare the load-flow and voltage-drop analysis and report to show power system components that are overloaded, or might become overloaded; show bus voltages that are less than as prescribed by NFPA 70.

3.05 POWER SYSTEM DATA

A. Obtain all data necessary for the analysis.
   1. Verify completeness of data supplied on the one-line diagram on Drawings. Call discrepancies to the attention of Architect.
   2. For new equipment, use characteristics submitted under the provisions of action submittals and information submittals for this Project.
   3. For existing equipment, whether or not relocated, obtain required electrical distribution system data by field investigation and surveys, conducted by qualified technicians and engineers.

B. Gather and tabulate the following input data to support coordination study. Comply with recommendations in IEEE 1584, IEEE 241, IEEE 551, and NFPA 70E as to the amount of detail that is required to be acquired in the field. Field data gathering shall be under the direct supervision and control of the engineer in charge of performing the study, and shall be by the engineer or its representative who holds NETA ETT Level III certification or NICET Electrical Power Testing Level III certification.
   1. Product Data for overcurrent protective devices specified in other Sections and involved in overcurrent protective device coordination studies. Use equipment designation tags that are consistent with electrical distribution system diagrams, overcurrent protective device submittals, input and output data, and recommended device settings.
   2. Obtain electrical power utility impedance at the service.

3. Power sources and ties.
4. For transformers, include kVA, primary and secondary voltages, connection type, impedance, X/R ratio, taps measured in per cent, and phase shift.
5. For circuit breakers and fuses, provide manufacturer and model designation. List type of breaker, type of trip and available range of settings, SCCR, current rating, and breaker settings.
6. Generator short-circuit current contribution data, including short-circuit reactance, rated kVA, rated voltage, and X/R ratio.
7. Busway manufacturer and model designation, current rating, impedance, lengths, and conductor material.
8. Motor horsepower and NEMA MG 1 code letter designation.
9. Low-voltage cable sizes, lengths, number, conductor material and conduit material (magnetic or nonmagnetic).
10. Short-circuit current at each system bus, three phase and line-to-ground.
11. Full-load current of all loads.
12. Voltage level at each bus.
13. Maximum demands from service meters.
14. Medium-voltage cable sizes, lengths, conductor material, and cable construction and metallic shield performance parameters.
15. Data sheets to supplement electrical distribution system diagram, cross-referenced with tag numbers on diagram, showing the following:
    a. Special load considerations, including starting inrush currents and frequent starting and stopping.
    b. Transformer characteristics, including primary protective device, magnetic inrush current, and overload capability.
    c. Motor full-load current, locked rotor current, service factor, starting time, type of start, and thermal-damage curve.
    d. Generator thermal-damage curve.
    e. Ratings, types, and settings of utility company's overcurrent protective devices.
    f. Special overcurrent protective device settings or types stipulated by utility company.
    g. Time-current-characteristic curves of devices indicated to be coordinated.
    h. Manufacturer, frame size, interrupting rating in amperes rms symmetrical, ampere or current sensor rating, long-time adjustment range, short-time adjustment range, and instantaneous adjustment range for circuit breakers.
    i. Manufacturer and type, ampere-tap adjustment range, time-delay adjustment range, instantaneous attachment adjustment range, and current transformer ratio for overcurrent relays.
    j. Panelboards, switchboards, motor-control center ampacity, and SCCR in amperes rms symmetrical.
    k. Identify series-rated interrupting devices for a condition where the available fault current is greater than the interrupting rating of the downstream equipment. Obtain device data details to allow verification that series application of these devices complies with NFPA 70 and UL 489 requirements.

3.06 FIELD ADJUSTING

A. Adjust relay and protective device settings according to the recommended settings provided by the coordination study. Field adjustments shall be completed by the engineering service division of the equipment manufacturer under the Startup and Acceptance Testing contract portion.

B. Make minor modifications to equipment as required to accomplish compliance with short-circuit and protective device coordination studies.

C. Testing and adjusting shall be by a full-time employee of the Field Adjusting Agency, who holds NETA ETT Level III certification or NICET Electrical Power Testing Level III certification.

1. Perform each visual and mechanical inspection and electrical test stated in NETA Acceptance Testing Specification. Certify compliance with test parameters. Perform NETA tests and inspections for all adjustable overcurrent protective devices.

3.07 ARC-FLASH HAZARD ANALYSIS

A. Comply with NFPA 70E and its Annex D for hazard analysis study.

B. Use the short-circuit study output and the field-verified settings of the overcurrent devices.

C. Calculate maximum and minimum contributions of fault-current size.
   1. The minimum calculation shall assume that the utility contribution is at a minimum and shall assume no motor load.
   2. The maximum calculation shall assume a maximum contribution from the utility and shall assume motors to be operating under full-load conditions.

D. Calculate the arc-flash protection boundary and incident energy at locations in the electrical distribution system where personnel could perform work on energized parts.

E. Include medium- and low-voltage equipment locations, except 240-V ac and 208-V ac systems fed from transformers less than 125 kVA.

F. Safe working distances shall be specified for calculated fault locations based on the calculated arc-flash boundary, considering incident energy of 1.2 cal/sq.cm.

G. Incident energy calculations shall consider the accumulation of energy over time when performing arc-flash calculations on buses with multiple sources. Iterative calculations shall take into account the changing current contributions, as the sources are interrupted or decremented with time. Fault contribution from motors and generators shall be decremented as follows:
   1. Fault contribution from induction motors should not be considered beyond three to five cycles.
   2. Fault contribution from synchronous motors and generators should be decayed to match the actual decrement of each as closely as possible (e.g., contributions from permanent magnet generators will typically decay from 10 per unit to three per unit after 10 cycles).

H. Arc-flash computation shall include both line and load side of a circuit breaker as follows:
   1. When the circuit breaker is in a separate enclosure.
   2. When the line terminals of the circuit breaker are separate from the work location.

I. Base arc-flash calculations on actual overcurrent protective device clearing time. Cap maximum clearing time at two seconds based on IEEE 1584, Section B.1.2.

3.08 LABELING

A. Apply one arc-flash label for 600-V ac, 480-V ac, and applicable 208-V ac panelboards and disconnects and for each of the following locations:
   1. Motor-control center.
   2. Low-voltage switchboard.
   3. Switchgear.
   4. Medium-voltage switch.
   5. Control panel.

3.09 APPLICATION OF WARNING LABELS

A. Install the arc-fault warning labels under the direct supervision and control of the Arc-Flash Study Specialist.

3.10 DEMONSTRATION

A. Engage the Study Specialist to train Owner's maintenance personnel in the potential arc-flash hazards associated with working on energized equipment and the significance of the arc-flash warning labels.

B. Engage the Study Specialist to train Owner's maintenance personnel in the following:

1. Acquaint personnel in the fundamentals of operating the power system in normal and emergency modes.
2. Hand-out and explain the objectives of the coordination study, study descriptions, purpose, basis, and scope. Include case descriptions, definition of terms, and guide for interpreting the time-current coordination curves.
3. Adjust, operate, and maintain overcurrent protective device settings.

END OF SECTION 260574

SECTION 260800
ELECTRICAL SYSTEMS COMMISSIONING

PART 1 GENERAL

1.01 RELATED WORK

A. All other sections in Division 21, 22 and 23
   1. DESCRIPTION

B. The purpose of the commissioning process is to provide the Owner/operator of the facility with an elevated level of assurance that the Electrical Systems have been installed in the prescribed manner and operate within the performance guidelines set in the design intent. The Commissioning Authority shall provide the Owner with an unbiased, objective view of the systems installation, operation, and performance. This process is not to take away or reduce the responsibility of the design professionals or installing contractors to provide a finished product. Commissioning is intended to enhance the quality of system start-up and aid in the orderly transfer of systems to beneficial use by the owner.
   1. The Commissioning Authority will be a member of the construction team, cooperating and coordinating all commissioning activities with the design professionals, construction manager, contractors, subcontractors, manufacturers and equipment suppliers.
   2. SCOPE

C. The responsibilities of the Contractor shall include:
   1. Coordinate and manage the Contractors commissioning activities.
   2. Coordinate directly with each subcontractor and vendor with respect to their responsibilities and contractual obligations for commissioning.
   3. Attend periodic on-site commissioning meetings.
   4. Integrate commissioning schedule into the master construction activities schedule. Update the schedule at specified intervals.
   5. Conduct installation verification inspections.
   6. Review controls documentation and interface with other systems.
   7. Obtain, review and assemble operation and maintenance information and as-built drawings provided by the various subcontractors and vendors.
   8. Note any inconsistencies or deficiencies in system operations. Enforce system Compliance or recommend to the owner’s Representative modifications to system design that will correct or enhance system performance.
   9. Coordinate Commissioning Authority test witnessing, after verifying that pretests have been satisfactorily conducted and final tests are ready to be performed.
   10. Be present during training sessions to direct video recording, present training
       a. and direct the presentations of others.
   11. Be present during start-up activities to direct and witness execution of start-up.
   12. Monitor performance of testing, adjusting and other activities to ensure acceptable results, and use of approved methods and instrumentation.
   13. Ensure that necessary test instrumentation is available during verification and functional performance testing, and that instruments meet quality and calibration requirements and are in good working order.
   14. Be present during verification and functional performance testing and retesting to direct and witness execution of tests.
   15. If a commissioning test fails, determine the cause of failure, direct timely correction of the deficiency and then retest. Reimburse the Owner for billed costs for the extraordinary participation of the Owners Representative, Architect, Commissioning Authority and owner’s staff.
   16. Track commissioning deficiencies until correction and retesting is successfully completed.
       a. he functions and responsibility of the Commissioning Authority shall include:
   17. Responsibility: The primary point of responsibility is to inform the Contractor and the owner on the status, integration, and performance of systems within the facility.

18. Information: The Commissioning Authority shall function as a catalyst and initiator to disseminate information and assist the design and construction teams in the completion of the construction process. This shall include system completeness, performance, and adequacy to meet the intended performance standards of each system. Services include construction observation, spot testing, verification and functional performance testing, and providing performance and operating information to the responsible parties, e.g., contractors, design professionals, and the Owner.
19. Quality Assurance: Assist the responsible parties to maintain a high-quality level of installation and system performance.
20. Observation of tests: Commissioning Authority shall observe, and coordinate testing as required to ensure system performance meets the design intent.
21. Documentation of tests: Commissioning Authority shall document the results of the performance testing directly and/or ensure that all testing is documented by the appropriate technicians. The Commissioning Authority shall provide standard forms to be used by all parties for consistency of approach and type of information to be recorded.
22. Resolution of disputes: The Commissioning Authority is to remain an independent party present on the project with specific knowledge of the subject. Should disputes arise, the Commissioning Authority shall perform research to determine the scope and extent of the problem and educate the involved parties as to the nature and extent of the problem. This shall include technical and financial aspects of the dispute, including assistance to help identify who the responsible parties are and to help implement corrective action. The Owner/Architect shall preside over resolution of the problem.
23. Deficiencies: Provision of technical expertise to oversee and verify the
    a. correction of deficiencies found during the commissioning process.
24. Provision of technical expertise to review and edit operating and maintenance descriptions by system.
25. The Commissioning Agent is an independent contractor and shall work under a separate contract directly for the Owner and / or Contractor.
26. The Commissioning Agent shall not be financially associated with any entity, except the one employing him on this project, to avoid potential conflicts of interest.
27. OTHER TESTING REQUIRED
    a. The format of the written report must be submitted to the Cx Authority for approval prior to testing.
        1) Check for damage that may eventually result in rust or
    b. corrosion
        1) Verify that all equipment is properly anchored to meet the seismic requirements detailed by the design engineer. Pay attention to the anchoring of floor mounted switchgear and other floor mounted devices.
            (a) Perform an impedance test on the grounding system.
        2) Bus connections, cable connections, switches, transformers, etc., are to be checked with a remote reading thermometer where feasible after the equipment is
            (a) in operation.
        3) Verify that all motors are properly protected with properly sized disconnects (local if necessary), and that they are properly identified.
        4) Verify that all panel boards are installed, labeled and tested.
        5) Verify that all receptacles, switches and other wiring devices are properly installed and tested.
        6) are installed and tested, and labeled.
        7) Verify that all lighting systems including controls and dimmers are properly installed and tested.
28. (i.e., Fire Marshal)
        1) Verify that security systems are installed, labeled and tested if applicable.

2) Contractor will fill out a list of occupancy sensors for every occupancy sensor installed with noted levels of PIR and Ultrasonic indicated on the written report prepared by the contractor including time settings.
3) Contractor will test each photocell for the daylighting system and provide a drafted report for each sensor including lighting levels at desk level and the lighting level sensed for the photocell including the shut-down lighting level and the turn on lighting level for the sensor regarding the measured lighting sensed by a testing instrument at light level.

A

EACH LIGHT. TO.

3.01

CONTRACTOR WILL PROVIDE FOR THE NETWORK LIGHTING CONTROLS A LIST OF LIGHTS AS SHOWN ON PLANS AND MARKED UP AND THE SCHEDULES FOR EACH BANK OF LIGHTS (MADE ON

A. marked up set of plans in typed format, written will not be accepted, of and their corresponding schedule and relay and circuit that the light is tied This will be done for all lights tied to the lighting system.

B. Contractor will provide a written report for each circuit in the building with the corresponding voltage drop as measure at an outlet or light.
   1. COORDINATION
   2. The Commissioning authority shall receive a copy of all construction documents, addenda, change orders, and appropriate approved submittals and shop drawings directly from the Architect and Contractor.
   3. The Commissioning Authority shall disseminate written information and documents to all responsible parties relative to the nature and extent of the communication.
      a. The Commissioning Authority is primarily responsible to his employer, and as such, shall. regularly appraise the Architect, the Contractor, and the Owner of progress, pending problems and/or disputes, and shall provide regular status.
         1) identified and quantified as soon as possible.
   4. The Commissioning Authority shall coordinate the schedule of commissioning
         1) activities with the construction schedule. It is possible that some procedures will be completed before the Electrical system is completed.
   5. SCHEDULE
      a. Commissioning of systems shall proceed per the criteria established, in the
         1) specific sections that follow, with activities to be performed on a timely basis.
      b. The Commissioning Authority shall be available to respond promptly to avoid construction delays.
      c. Start-up and testing of systems may proceed prior to completion of systems to expedite progress. However, the Commissioning Authority shall not perform testing and checkout services that are the primary responsibility of the contractor/vendor in advance of their testing and checkout.
      d. and actions to correct deficiencies coordinated in a timely manner.
      e. Contractor schedules and scheduling is the responsibility of the Contractor. The Commissioning Authority shall provide commissioning scheduling information to the Contractor for review and planning activities.
         1) RELATED WORK SPECIFIED ELSEWHERE
            (a) The commissioning process does
         2) not relieve any contractors from their obligations to complete all portions of work in a satisfactory manner.
   6. SUBMITTALS
      a. If contractor ignores or does not seek out a missing review by the Cx Agent, Contractor will be solely responsible for replacement of equipment that does not meet specifications or contract documents
         1) regardless of engineer’s comments.
      b. site by the manufacture, supplier, installer, engineer, owner, and Cx agent.
         1) Any re-submittals will be charged to the contractor at a rate of $250 per hour with a minimum of 4 hours per each re-submittal per submittal section resubmitted.

PART 2 - PRODUCTS (NOT USED) PART 3 - EXECUTION

4.01 COMMISSIONING PLAN AND SCHEDULE

A. The Commissioning Authority shall develop and submit a schedule for the
         1) commissioning process which is integrated with the construction schedule.

2) Included shall be the required work by all team members (Commissioning Authority, design team, contractors, and the Owner). Overlay with the construction
3) schedule, and include time for testing, verification, and functional performance testing.
(a) CONSTRUCTION OBSERVATION

b. This is an additional and separate activity from that provided by the design team. Construction observation is required as part of the commissioning and coordination process to be provided by the Commissioning Authority
1) .

2. TESTING AND VERIFICATION
1) Testing and Verification shall be accomplished by the Contractor or their
(a) designee. The Commissioning Authority shall spot check this work to verify accuracy of results.

3. VERIFICATION AND FUNCTIONAL PERFORMANCE TEST PROCEDURES
(a) The Commissioning Authority shall develop and document the commissioning procedure to be used. Include a performance checklist and performance test data sheets for each system based on actual system configuration. These procedures shall be reviewed by the appropriate design engineers for technical depth, clarity of documentation and completeness. Special emphasis shall be placed on testing procedures that shall conclusively determine actual system performance and compliance with the design intent.
(b) Most electrical equipment requires safety devices to stop and/or prevent operation unless minimum safety standards or conditions are met. The Commissioning Authority shall observe the actual performance of safety devices in a real or closely simulated condition of failure.
(c) Systems may include safety devices and components that control a variety of equipment operating as a system. Interlocks may be hard-wired or operate from software. Operation of these interlocks shall be verified by the Commissioning Authority.
(d) The Commissioning Authority shall determine the acceptance procedures for each system. The acceptance procedures shall incorporate the commissioning standards and successful testing results.
(e) The appropriate contractor and vendor(s) shall be informed of what tests are to be performed and the expected results. Whereas some test results and interpretations may not become evident until the actual tests are performed, all parties shall have a reasonable understanding of the requirements. The Commissioning Plan shall address those requirements and be distributed to all parties involved with that system.
(f) Acceptance procedures shall confirm the performance of systems to the extent of' the design intent. When a system is accepted, the Owner shall be assured that the system is complete, works as intended, is correctly documented, and operator training has been performed.

4. FUNCTIONAL PERFORMANCE TESTING – OBSERVATION
a. The functional performance testing shall be done by the Contractor. The Commissioning Authority shall direct and witness these tests.
1) the systems do perform per the design intent.

5. RE-TESTING OR RE-REVIEW OR RE-VERFICATION
(a) The Contractor shall, at no additional cost to the Owner, repeat the entire verification test procedure for each test for which acceptable results are not achieved. Tests shall be repeated until acceptable results are achieved. In addition, any re-review of anything including but not limited to O&M, Record Drawings, Submittals, or anything else will be billed to the contractor in accordance with 3.6- C.

(b) The Contractor shall compensate the Owner for costs incurred as the result of tests repeated. This includes the costs for the Commissioning Authority, Design Architect, Design Engineers, and Owner's personnel.
(c) Contractor will be billed at a rate of $250 per hour for any retesting with a minimum of 4 hours for each visit.

6. CORRECTION OF DEFICIENCIES
   a. The Contractor shall correct functional performance test deficiencies and promptly schedule a retest.
7. B.Corrections during verification or functional performance test are generally
   1) prohibited to avoid consuming the time of personnel waiting for the test- but not involved in making the correction. Exceptions will be allowed if the cause of the failure is obvious and corrective action can be completed in less than five minutes. If corrections are made under this exception, the failure shall be noted on the test data form. A new test data form, marked retest, shall be initiated after the correction has been made. The entire test procedure shall be repeated.
8. SOFTWARE DOCUMENTATION
   a. Review detailed software documentation for all control systems. This includes review of vendor documentation, their programming approach and the specific soft-ware routines applied to this project. Discrepancies in programming approaches and/or sequences shall be reported and coordinated to provide the Owner with the most appropriate, simple, and straightforward approach to software routines.
9. OPERATING AND MAINTENANCE (O&M) MANUALS
   a. The Commissioning Authority shall review the draft form of the O&M manuals provided by the contractor. The review process shall verify that O&M instructions meet specifications and are included for all equipment furnished by the contractor, and that the instructions and wiring diagrams are specific (edited where necessary) to the actual equipment provide for this project.
      1) B.Published literature shall be specifically oriented to the provided equipment indicating required operation and maintenance procedures, parts lists, assembly/disassembly diagrams, and related information.
      2) C.The contractor shall incorporate the standard technical literature into system specific formats for this facility as designed and as actually installed. The resulting O&M information shall be system specific, concise, to the point, and tailored specifically to this facility. The Commissioning Authority shall review and edit these documents as necessary for final corrections by the contractor.
      3) The Commissioning Agent shall:
         (a) Verify an alphabetical list of all systems components including the name, address and 24-hour phone number of the company responsible for
            (1) servicing each item during the first year's operations is included.
         (b) Verify complete operating instructions for entire electrical system.
            (1) Verify all instructions for emergency procedures, fire or failure of major equipment and procedures for normal starting, operating, shutdown, seasonal and long-term shutdown are included.
            (2) Randomly verify all starters disconnect switches and manually operated controls, have been labeled with legible markers corresponding to the operating instructions in the maintenance manual.
            (3) Verify all extended warranties have been supplied in the maintenance manual in addition to the standard one-year warranty. Verify all original copies of warranties for specific equipment where manufactures
   b. exceeds the standard one-year warranty.
   c. Verify the signed Certificate for proof of performance is provided. The
            (1) signed certificate from the electrical contractor stating they have personally, checked the operation of equipment and everything under

their said contract is operating as specified.

(2) Verify all testing documents for Electrical system controls or other building electrical tests are supplied and installed in operations and maintenance manual.

10. ELECTRICAL IDENTIFICATION
    a. Randomly verify all panel boards, starters, disconnect switches, circuit breakers, terminal boards, junction boxes and other special equipment items furnished/or installed by the electrical contractor is identified with permanently attached, engraved plastic name plates.
    b. Randomly verify all junction boxes and outlet boxes above ceiling and in unfinished areas and all others shall be permanently and legibly marked as to voltage, phase characteristics and the panel form which it is served.
    c. Verify each branch circuit in all panel boards have type written identification with complete description of loads served.
    d. Randomly verify all empty conduit systems are identified as to the use and junction and outlet boxes and pull wires are identified with point of termination clearly described.
    e. Randomly verify each wiring system is clearly identified as to the voltage and service, including signal and control conduits.
    f. Verify operating instructions include a brochure containing one copy of all approved engineering submitted data, approved diagrams and drawings including all shop drawings required for layout and installation and all other data and/or drawings required during construction are also delivered to owner.
    g. Verify single line diagram is supplied in main switch gear room, mounted under glass or laminated on the wall.
    h. The O&M manual review and coordination efforts shall be completed prior to Owner training sessions, as these documents are to be utilized in the training sessions.
11. TRAINING
    a. Schedule and coordinate training sessions for the Owner's staff for each system. Training shall be in a classroom setting with the appropriate schematics, handouts, and visual/audio training aids on-site with the vendor’s equipment.
    b. The Commissioning Authority assists in organizing, scheduling, and directing the training sessions.
    c. The appropriate installing contractors shall provide training on all the major systems per specifications, including peculiarities specific to this project.
    d. The equipment vendors shall provide training on the specifics of each major equipment item including design philosophy, troubleshooting, and repair techniques.

B. RECORD DRAWINGS
    a. The Commissioning Authority shall review the as-built contract documents to verify incorporation of both design changes and as-built construction details. Discrepancies noted shall be corrected by the appropriate party. The Commissioning Agent shall:
    b. Verify horizontal and vertical location of underground utilities dimensioned of column lines.
    c. Verify dimension location of internal utilities in concealed construction.
    d. Verify changes by order of field order have been recorded to drawings.
        1) Verify all details not on original contract drawings have been converted and recorded on as built drawings.
2. EXCLUSIONS
    a. Responsibility for construction means and methods: The Commissioning Authority is not responsible for construction means, methods, job safety, or any, construction management functions on the job site.

b. Hands-on work by the Commissioning Authority: The contractors shall provide all services requiring tools or the use of tools to start-up, test, adjust, or otherwise bring equipment and systems into a fully operational state. The Commissioning Authority shall coordinate and observe these procedures (and may make minor adjustments) but shall not perform construction or technician services other than verification of testing, adjusting, balancing, and control function.

END OF SECTION 260800

SECTION 260923
DISTRIBUTED DIGITAL LIGHTING CONTROL SYSTEMS

GENERAL

1.01 REFERENCE STANDARDS

A. NFPA 70 - National Electrical Code; Most Recent Edition Adopted by Authority Having Jurisdiction, Including All Applicable Amendments and Supplements.

B. UL 20 - General-Use Snap Switches; Current Edition, Including All Revisions.

C. UL 924 - Emergency Lighting and Power Equipment; Current Edition, Including All Revisions.

D. UL 2043 - Fire Test for Heat and Visible Smoke Release for Discrete Products and Their Accessories Installed in Air-Handling Spaces; Current Edition, Including All Revisions.

SUMMARY

2.01 SECTION INCLUDES:

A. Digital Lighting Load Controls

B. Relay Panels

C. Emergency Lighting Control (if applicable)

2.02 RELATED SECTIONS:

A. Section 262726 - Wiring Devices Receptacles

B. Section 265113 – Interior Lighting.

2.03 CONTROL INTENT – CONTROL INTENT INCLUDES, BUT IS NOT LIMITED TO:

A. Defaults and initial calibration settings for such items as time delay, sensitivity, fade rates, etc.

B. Initial sensor and switching zones

C. Initial time switch settings

D. Emergency Lighting control (if applicable)

REFERENCES

3.01 AMERICAN NATIONAL STANDARDS INSTITUTE/INSTITUTE OF ELECTRICAL AND ELECTRONIC ENGINEERS (ANSI/IEEE) (WWW.ANSI.ORG AND WWW.IEEE.ORG)

3.02 INTERNATIONAL ELECTROTECHNICAL COMMISSION (IEC) (WWW.IEC.CH)

3.03 INTERNATIONAL ORGANIZATION FOR STANDARDIZATION (ISO) (WWW.ISO.CH):

3.04 NATIONAL ELECTRICAL MANUFACTURERS ASSOCIATION (NEMA) (WWW.NEMA.ORG)

3.05 WD1 (R2005) - GENERAL COLOR REQUIREMENTS FOR WIRING DEVICES.

3.06 UNDERWRITERS LABORATORIES, INC. (UL) (WWW.UL.COM):

A. 508 – Industrial Controls

B. 916 – Energy Management Equipment

C. 924 – Emergency Lighting

3.07 UNDERWRITER LABORATORIES OF CANADA (ULC) (WWW.ULC.CA)

SYSTEM DESCRIPTION & OPERATION

4.01 THE LIGHTING CONTROL AND AUTOMATION SYSTEM AS DEFINED UNDER THIS SECTION COVERS THE FOLLOWING EQUIPMENT:

A. Digital Lighting Management (DLM) local network – Free topology, plug-in wiring system (Cat 5e) for power and data to room devices.

B. Digital Room Controllers – Self-configuring, digitally addressable one, two or three relay plenum-rated controllers for on/off control. Selected models include 0-10 volt or line voltage forward phase control dimming outputs and integral current monitoring capabilities.

C. Digital Fixture Controllers – Self-configuring, digitally addressable one relay fixture-integrated controllers for on/off/0-10V dimming control.

D. Digital Occupancy Sensors – Self-configuring, digitally addressable, calibrated occupancy sensors with LCD display and two-way active infrared (IR) communications.

E. Digital Switches – Self-configuring, digitally addressable pushbutton on/off, dimming, and scene switches with two-way active infrared (IR) communications.

F. Handheld remotes for personal control – On/Off, dimming and scene remotes for control using infrared (IR) communications. Remote may be configured in the field to control selected loads or scenes without special tools.

G. Digital Daylighting Sensors – Single-zone closed loop, multi-zone open loop and single-zone dual-loop daylighting sensors with two-way active infrared (IR) communications for daylight harvesting using switching, bi-level, tri-level or dimming control.

H. Configuration Tools – Handheld remote for room configuration and relay panel programming provides two way infrared (IR) communications to digital devices and allows complete configuration and reconfiguration of the device / room from up to 30 feet (914.4 cm) away.

I. Digital Lighting Management (DLM) segment network – Linear topology, BACnet MS/TP network (1.5 twisted pair, shielded) to connect multiple DLM local networks for centralized control.

J. Network Bridge – Provides BACnet MS/TP-compliant digital networked communication between rooms, panels and the Segment Manager or building automation system (BAS) and automatically creates BACnet objects representative of connected devices.

K. Segment Manager – BACnet MS/TP-based controller with web browser-based user interface for system control, scheduling, power monitoring, room device parameter administration and reporting.

L. Programming and Configuration Software – Optional PC-native application capable of accessing DLM control parameters within a room, for the local network, via a USB adapter, or globally, for many segment networks simultaneously, via BACnet/IP communication.

M. Digital Lighting Management Relay Panel and Zone Controller – Provides up to 8, 24, or 48 mechanically latching relays. Relays include a manual override and a single push-on connector for easy installation or removal from the panel. Panel accepts program changes from handheld configuration tool for date and time, location, holidays, event scheduling, button binding and group programming. Provides BACnet MS/TP-compliant digital networked communication between other lighting controls and/or building automation system (BAS). Zero relay Zone Controller primarily supports Digital Fixture Controller applications.

N. Emergency Lighting Control Unit (ELCU) – Allows a standard lighting control device to control emergency lighting in conjunction with normal lighting in any area within a building

LIGHTING CONTROL APPLICATIONS

5.01 UNLESS RELEVANT PROVISIONS OF THE APPLICABLE LOCAL ENERGY CODES ARE MORE STRINGENT, PROVIDE A MINIMUM APPLICATION OF LIGHTING CONTROLS AS FOLLOWS:

A. Space Control Requirements – Provide occupancy/vacancy sensors with Manual- or Partial-ON functionality in all spaces except toilet rooms, storerooms, library stacks, or other applications where hands-free operation is desirable and Automatic-ON occupancy sensors are more appropriate. Provide Manual-ON occupancy/vacancy sensors for any enclosed office, conference room, meeting room, open plan system and training room. For spaces with multiple occupants, or where line-of-sight may be obscured, provide ceiling- or corner-mounted sensors and Manual-ON switches.

B. Daylit Areas – Provide daylight-responsive automatic control in all spaces (conditioned or unconditioned) where daylight contribution is available as defined by relevant local building energy code:

1. All luminaires within code-defined daylight zones shall be controlled separately from luminaires outside of daylit zones.
2. Daytime setpoints for total ambient illumination (combined daylight and electric light) levels that initiate dimming shall be programmed in compliance with relevant local building energy codes.
3. Multiple-level switched daylight harvesting controls may be utilized for areas marked on drawings.
4. Provide smooth and continuous daylight dimming for areas marked on drawings. Daylighting control system may be designed to turn off electric lighting when daylight is at or above required lighting levels, only if system functions to turn lamps back on at dimmed level, rather than turning full-on prior to dimming.

C. Conference, meeting, training, auditoriums, and multipurpose rooms shall have controls that allow for independent control of each local control zone. Rooms larger than 300 sq feet (0.32293 sq cm) shall instead have at least four preset lighting scenes unless otherwise specified. Occupancy / vacancy sensors shall be provided to turn off all lighting in the space. Spaces with up to four moveable walls shall include controls that can be reconfigured when the room is partitioned.

SUBMITTALS

6.01 SUBMITTALS PACKAGE: SUBMIT THE SHOP DRAWINGS, AND THE PRODUCT DATA SPECIFIED BELOW AT THE SAME TIME AS A PACKAGE.

6.02 SHOP DRAWINGS:

A. Composite wiring and/or schematic diagram of each control circuit as proposed to be installed.

B. Show exact location of all digital devices, including at minimum sensors, load controllers, and switches for each area on reflected ceiling plans. (Contractor must provide AutoCAD format reflected ceiling plans.)

C. Provide room/area details including products and sequence of operation for each room or area. Illustrate typical acceptable room/area connection topologies.

D. Network riser diagram including floor and building level details. Include network cable specification and end-of-line termination details, if required. Illustrate points of connection to integrated systems. Coordinate integration with mechanical and/or other trades.

6.03 PRODUCT DATA: CATALOG SHEETS, SPECIFICATIONS AND INSTALLATION INSTRUCTIONS.

6.04 INCLUDE DATA FOR EACH DEVICE WHICH:

A. Indicates where sensor is proposed to be installed.

B. Prove that the sensor is suitable for the proposed application.

QUALITY ASSURANCE

MANUFACTURER: MINIMUM 10 YEARS EXPERIENCE IN MANUFACTURE OF LIGHTING CONTROLS.

PROJECT CONDITIONS

9.01 DO NOT INSTALL EQUIPMENT UNTIL FOLLOWING CONDITIONS CAN BE MAINTAINED IN SPACES TO RECEIVE EQUIPMENT:

A. Ambient temperature: 0° to 40° C (32° to 104° F).

B. Relative humidity: Maximum 90 percent, non-condensing.

WARRANTY

10.01 PROVIDE A FIVE YEAR LIMITED MANUFACTURER'S WARRANTY ON ALL ROOM CONTROL DEVICES AND PANELS.

MAINTENANCE

11.01 SPARE PARTS:

A. Provide the minimum of 5% or 5 of each of the following spares of each product that are used on this project to be used for maintenance as listed below:
   1. Single-zone room controller
   2. Two-zone room controller
   3. Three-zone room controller
   4. Single-zone dimming controller
   5. Two-zone dimming controller
   6. Three-zone dimming controller
   7. Fixture controller
   8. Network bridge
   9. Isolated auxiliary relay
   10. Ceiling occupancy sensor (each type used)
   11. Wall mount occupancy sensor (each type used)
   12. Wall switch (each type used)
   13. Interior photocell

PART 1 PRODUCTS

12.01 MANUFACTURERS

12.02 ACCEPTABLE MANUFACTURER:

A. Basis of design product: WattStopper Digital Lighting Management (DLM) or subject to compliance and prior approval with specified requirements of this section, one of the following:
   1. See schedule on drawings

DIGITAL LIGHTING CONTROLS

13.01 FURNISH THE COMPANY'S SYSTEM WHICH ACCOMMODATES THE SQUARE-FOOTAGE COVERAGE REQUIREMENTS FOR EACH AREA CONTROLLED, UTILIZING ROOM CONTROLLERS, DIGITAL OCCUPANCY SENSORS, SWITCHES, DAYLIGHTING SENSORS AND ACCESSORIES WHICH SUIT THE LIGHTING AND ELECTRICAL SYSTEM PARAMETERS.

DLM LOCAL NETWORK (ROOM NETWORK)

14.01 THE DLM LOCAL NETWORK IS A FREE TOPOLOGY LIGHTING CONTROL PHYSICAL CONNECTION AND COMMUNICATION PROTOCOL DESIGNED TO CONTROL A SMALL AREA OF A BUILDING.

14.02 FEATURES OF THE DLM LOCAL NETWORK INCLUDE:

A. Plug n' Go™ automatic configuration and binding of occupancy sensors, switches and lighting loads to the most energy-efficient sequence of operation based upon the device attached.

B. Simple replacement of any device in the local DLM network with a standard off the shelf unit without requiring significant commissioning, configuration or setup.

C. Push n' Learn™ configuration to change the automatic configuration, including binding and load parameters without tools, using only the buttons on the digital devices in the local network.

D. Two-way infrared communications for control by handheld remotes, and configuration by a handheld tool including adjusting load parameters, sensor configuration and binding, within a line of sight of up to 30 feet (914.4 cm) from a sensor, wall switch or IR receiver.

14.03 DIGITAL ROOM DEVICES CONNECT TO THE LOCAL NETWORK USING PRE-TERMINATED CAT 5E CABLES WITH RJ-45 CONNECTORS, WHICH PROVIDE BOTH DATA AND POWER TO ROOM DEVICES. SYSTEMS THAT UTILIZE RJ-45 PATCH CORDS BUT DO NOT PROVIDE SERIAL COMMUNICATION DATA FROM INDIVIDUAL END DEVICES ARE NOT ACCEPTABLE.

14.04 IF MANUFACTURER'S PRE-TERMINATED CAT5E CABLES ARE NOT USED FOR THE INSTALLATION, THE CONTRACTOR IS RESPONSIBLE FOR TESTING EACH CABLE FOLLOWING INSTALLATION AND SUPPLYING MANUFACTURER WITH TEST RESULTS.

14.05 WATTSTOPPER PRODUCT NUMBER: LMRJ-SERIES

DIGITAL LOAD CONTROLLERS (ROOM AND FIXTURE CONTROLLERS)

15.01 DIGITAL CONTROLLERS FOR LIGHTING LOADS AUTOMATICALLY BIND THE ROOM LOADS TO THE CONNECTED DEVICES IN THE SPACE WITHOUT COMMISSIONING OR THE USE OF ANY TOOLS. ROOM LOAD CONTROLLERS SHALL BE PROVIDED TO MATCH THE ROOM LIGHTING LOAD CONTROL REQUIREMENTS. THE CONTROLLERS WILL BE SIMPLE TO INSTALL, AND WILL NOT HAVE DIP SWITCHES OR POTENTIOMETERS, OR REQUIRE SPECIAL CONFIGURATION FOR STANDARD PLUG N' GO APPLICATIONS. THE CONTROL UNITS WILL INCLUDE THE FOLLOWING FEATURES:

A. Automatic room configuration to the most energy-efficient sequence of operation based upon the devices in the room.

B. Simple replacement – Using the default automatic configuration capabilities, a room controller may be replaced with an off-the-shelf.

C. Multiple room controllers connected together in a local network must automatically arbitrate with each other, without requiring any configuration or setup, so that individual load numbers are sequentially assigned using each controller's device ID's from highest to lowest.

D. Device Status LEDs to indicate:
   1. Data transmission
   2. Device has power
   3. Status for each load
   4. Configuration status

E. Quick installation features including:
   1. Standard junction box mounting
   2. Quick low voltage connections using standard RJ-45 patch cable

F. Based on individual configuration, each load shall be capable of the following behavior on power up following the loss of normal power:
   1. Turn on to 100%
   2. Turn off
   3. Turn on to last level

G. Each load shall at a minimum be configurable to operate in the following sequences based on occupancy:
   1. Auto-on/Auto-off (Follow on and off)
   2. Manual-on/Auto-off (Follow off only)

H. The polarity of each load output shall be reversible, via digital configuration, so that on is off and off is on.

I. BACnet object information shall be available for the following objects:
   1. Load status
   2. Electrical current (when available)
   3. Total watts per controller
   4. Schedule state – normal or after-hours
   5. Demand response enable and disable
   6. Room occupancy status

7. Total room lighting loads watts
8. Total room watts/sq ft
9. Force on/off all loads

J. UL 2043 plenum rated

K. Manual override and LED indication for each load

L. Dual voltage (120/277 VAC, 60 Hz), or 347 VAC, 60 Hz (selected models only). 120/277 volt models rated for 20A total load, derating to 16A required for some dimmed loads (forward phase dimming); 347 volt models rated for 15A total load.

M. Zero cross circuitry for each load

N. All digital parameter data programmed into an individual room controller shall be retained in non-volatile FLASH memory within the controller itself. Memory shall have an expected life of no less than 10 years.

15.02 ON/OFF ROOM CONTROLLERS SHALL INCLUDE:

A. One or two relay configuration

B. Efficient 150 mA switching power supply

C. Three RJ-45 DLM local network ports with integral strain relief and dust cover

D. WattStopper product numbers: LMRC-101, LMRC-102

15.03 ON/OFF/DIMMING ENHANCED ROOM CONTROLLERS SHALL INCLUDE:

A. Real time current monitoring

B. Multiple relay configurations
1. One, two or three relays (LMRC-21x series)
2. One or two relays (LMRC-22x series)

C. Efficient 250 mA switching power supply

D. Four RJ-45 DLM local network ports with integral strain relief and dust cover

E. One dimming output per relay
1. 0-10V Dimming - Where indicated, one 0-10 volt analog output per relay for control of compatible ballasts and LED drivers. The 0-10 volt output shall automatically open upon loss of power to the Room Controller to assure full light output from the controlled lighting. (LMRC-21x series)
2. Line Voltage, Forward Phase Dimming - Where indicated, one forward phase control line voltage dimming output per relay for control of compatible two-wire or three-wire ballasts, LED drivers, MLV, forward phase compatible ELV, neon/cold cathode and incandescent loads. (LMRC-22x series)
3. Each dimming output channel shall have an independently configurable minimum and maximum calibration trim level to set the dimming range to match the true dynamic range of the connected ballast or driver.
4. The LED level indicators on bound dimming switches shall utilize this new maximum and minimum trim.
5. Each dimming output channel shall have an independently configurable minimum and maximum trim level to set the dynamic range of the output within the new 0-100% dimming range defined by the minimum and maximum calibration trim.
6. Calibration and trim levels must be set per output channel.
7. Devices that set calibration or trim levels per controller are not acceptable.
8. All configuration shall be digital. Devices that set calibration or trim levels per output channel via trim pots or dip-switches are not acceptable.

F. Each load shall have an independently configurable preset on level for Normal Hours and After Hours events to allow different dimmed levels to be established at the start of both Normal Hours and After Hours events.

G. Fade rates for dimming loads shall be specific to bound switch buttons, and the load shall maintain a default value for any bound buttons that do not specify a unique value.

H. The following dimming attributes may be changed or selected using a wireless configuration tool:
   1. Establish preset level for each load from 0-100%
   2. Set high and low trim for each load
   3. Set lamp burn in time for each load up to 100 hours

I. Override button for each load provides the following functions:
   1. Press and release for on/off control
   2. Press and hold for dimming control

J. WattStopper product numbers: LMRC-211, LRMC-212, LRMC-213, LMRC-221, LMRC-222 .

15.04 FIXTURE CONTROLLERS SHALL INCLUDE:

A. A form factor and product ratings to allow various OEM fixture manufacturers to mount the device inside the ballast/driver cavity of standard-sized fluorescent or LED general lighting fixtures.

B. One 3A 120/277V rated mechanically held relay.

C. Programmable behavior on power up following the loss of normal power:
   1. Turn on to 100%
   2. Turn off
   3. Turn on to last level

D. Requirement for 7 mA of 24VDC operating power from the DLM local network.
   1. The Fixture Controller does not require a connection to a neutral conductor to operate, and unlike other types of Load Controllers it does not contribute power to the DLM local network to drive accessory devices.
   2. Power to drive the LMFC Fixture Controller electronics can come from any Room Load Controller, LMPB-100 Power Booster and/or LMZC-301 Zone Controller (described later in the LMCP LIGHTING CONTROL PANELS specification section).

E. 0-10V dimming capability via a single 0-10 volt analog output from the device for control of compatible ballasts and LED drivers. The 0-10 volt output shall automatically open upon loss of power to the Fixture Controller.

F. Terminals to connect an RJ-45 adaptor with 24” leads, mountable in a ½” KO, for connection to the DLM local network.
   1. The adaptor leads are insulated for use in a fixture cavity, and the lead length allows the OEM fixture manufacturer flexibility to position the Fixture Controller and the RJ45 jack in the best locations on each fixture.

G. A complete set of dimming features described above in the section detailing On/Off/Dimming Enhanced Room Controllers (subsection C.5 onward).

H. WattStopper product numbers: Fixture Controller: LMFC-011, DLM Cable Connector: LMFC-RJ-50-24, Power Booster: LMPB-100

DIGITAL WALL OR CEILING MOUNTED OCCUPANCY SENSOR

16.01 WALL OR CEILING MOUNTED (TO SUIT INSTALLATION) PASSIVE INFRARED (PIR), ULTRASONIC OR DUAL TECHNOLOGY DIGITAL (PASSIVE INFRARED AND ULTRASONIC) OCCUPANCY SENSOR.

16.02 DIGITAL OCCUPANCY SENSORS SHALL PROVIDE GRAPHIC LCD DISPLAY FOR DIGITAL CALIBRATION AND ELECTRONIC DOCUMENTATION. FEATURES INCLUDE THE FOLLOWING:

A. Digital calibration and pushbutton configuration for the following variables:
   1. Sensitivity – 0-100% in 10% increments

2. Time delay – 1-30 minutes in 1 minute increments
3. Test mode – Five second time delay
4. Detection technology – PIR, Ultrasonic or Dual Technology activation and/or re-activation.
5. Walk-through mode

B. Load parameters including Auto/Manual-ON, blink warning, and daylight enable/disable when photosensors are included in the DLM local network.

C. Programmable control functionality including:
1. Each sensor may be programmed to control specific loads within a local network.
2. Sensor shall be capable of activating one of 16 user-definable lighting scenes.
3. Adjustable retrigger time period for manual-on loads. Load will retrigger (turn on) automatically within a configurable period of time (default 10 seconds) after turning off.
4. On dual technology sensors, independently configurable trigger modes are available for both Normal (NH) and After Hours (AH) time periods. The retrigger mode can be programmed to use the following technologies:
5. Ultrasonic and Passive Infrared
6. Ultrasonic or Passive Infrared
7. Ultrasonic only
8. Passive Infrared only
9. Independently configurable sensitivity settings for passive infrared and ultrasonic technologies (on dual technology sensors) for both Normal (NH) and After Hour (AH) time periods.

D. One or two RJ-45 port(s) for connection to DLM local network.

E. Two-way infrared (IR) transceiver to allow remote programming through handheld commissioning tool and control by remote personal controls.

F. Device Status LEDs, which may be disabled for selected applications, including:
1. PIR detection
2. Ultrasonic detection
3. Configuration mode
4. Load binding

G. Assignment of occupancy sensor to a specific load within the room without wiring or special tools.

H. Manual override of controlled loads.

I. All digital parameter data programmed into an individual occupancy sensor shall be retained in non-volatile FLASH memory within the sensor itself. Memory shall have an expected life of no less than 10 years.

16.03 BACNET OBJECT INFORMATION SHALL BE AVAILABLE FOR THE FOLLOWING OBJECTS:

A. Detection state

B. Occupancy sensor time delay

C. Occupancy sensor sensitivity, PIR and Ultrasonic

16.04 UNITS SHALL NOT HAVE ANY DIP SWITCHES OR POTENTIOMETERS FOR FIELD SETTINGS.

16.05 MULTIPLE OCCUPANCY SENSORS MAY BE INSTALLED IN A ROOM BY SIMPLY CONNECTING THEM TO THE FREE TOPOLOGY DLM LOCAL NETWORK. NO ADDITIONAL CONFIGURATION WILL BE REQUIRED.

16.06 WATTSTOPPER PRODUCT NUMBERS: LMPX, LMDX, LMPC, LMUC, LMDC

DIGITAL WALL SWITCH OCCUPANCY SENSORS

17.01 WALLBOX MOUNTED PASSIVE INFRARED PIR OR DUAL TECHNOLOGY (PASSIVE INFRARED AND ULTRASONIC) DIGITAL OCCUPANCY SENSOR WITH 1 OR 2 SWITCH BUTTONS.

17.02 DIGITAL OCCUPANCY SENSORS SHALL PROVIDE SCROLLING LCD DISPLAY FOR DIGITAL CALIBRATION AND ELECTRONIC DOCUMENTATION. FEATURES INCLUDE THE FOLLOWING:

A. Digital calibration and pushbutton configuration for the following variables:
   1. Sensitivity – 0-100% in 10% increments
   2. Time delay – 1-30 minutes in 1 minute increments
   3. Test mode – Five second time delay
   4. Detection technology – PIR, Dual Technology activation and/or re-activation.
   5. Walk-through mode
   6. Load parameters including Auto/Manual-ON, blink warning, and daylight enable/disable when photosensors are included in the DLM local network.

B. Programmable control functionality including:
   1. Each sensor may be programmed to control specific loads within a local network.
   2. Sensor shall be capable of activating one of 16 user-definable lighting scenes.
   3. Adjustable retrigger time period for manual-on loads. Load will retrigger (turn on) automatically during the configurable period of time (default 10 seconds) after turning off.
   4. On dual technology sensors, independently configurable trigger modes are available for both Normal (NH) and After Hours (AH) time periods. The retrigger mode can be programmed to use the following technologies:
      a. Ultrasonic and Passive Infrared
      b. Ultrasonic or Passive Infrared
      c. Ultrasonic only
      d. Passive Infrared only

C. Independently configurable sensitivity settings for passive infrared and ultrasonic technologies (on dual technology sensors) for both Normal (NH) and After Hour (AH) time periods.

D. Two RJ-45 ports for connection to DLM local network.

E. Two-way infrared (IR) transceiver to allow remote programming through handheld configuration tool and control by remote personal controls.

F. Device Status LEDs including
   1. PIR detection
   2. Ultrasonic detection
   3. Configuration mode
   4. Load binding

G. Assignment of any occupancy sensor to a specific load within the room without wiring or special tools.

H. Assignment of local buttons to specific loads within the room without wiring or special tools

I. Manual override of controlled loads

J. All digital parameter data programmed into an individual wall switch sensor shall be retained in non-volatile FLASH memory within the wall switch sensor itself. Memory shall have an

expected life of no less than 10 years.

17.03 BACNET OBJECT INFORMATION SHALL BE AVAILABLE FOR THE FOLLOWING OBJECTS:

A. Detection state
B. Occupancy sensor time delay
C. Occupancy sensor sensitivity, PIR and Ultrasonic
D. Button state
E. Switch lock control
F. Switch lock status

17.04 UNITS SHALL NOT HAVE ANY DIP SWITCHES OR POTENTIOMETERS FOR FIELD SETTINGS.

17.05 MULTIPLE OCCUPANCY SENSORS MAY BE INSTALLED IN A ROOM BY SIMPLY CONNECTING THEM TO THE FREE TOPOLOGY DLM LOCAL NETWORK. NO ADDITIONAL CONFIGURATION WILL BE REQUIRED.

17.06 TWO-BUTTON WALL SWITCH OCCUPANCY SENSORS, WHEN CONNECTED TO A SINGLE RELAY DIMMING ROOM OR FIXTURE CONTROLLER, SHALL OPERATE IN THE FOLLOWING SEQUENCE AS A FACTORY DEFAULT:

A. Left button
   1. Press and release - Turn load on
   2. Press and hold - Raise dimming load
B. Right button
   1. Press and release - Turn load off
   2. Press and hold - Lower dimming load

17.07 LOW VOLTAGE MOMENTARY PUSHBUTTONS SHALL INCLUDE THE FOLLOWING FEATURES:

A. Load/Scene Status LED on each switch button with the following characteristics:
   1. Bi-level LED
   2. Dim locator level indicates power to switch
   3. Bright status level indicates that load or scene is active
B. The following button attributes may be changed or selected using a wireless configuration tool:
   1. Load and Scene button function may be reconfigured for individual buttons (from Load to Scene, and vice versa).
   2. Individual button function may be configured to Toggle, On only or Off only.
   3. Individual scenes may be locked to prevent unauthorized change.
   4. Fade Up and Fade Down times for individual scenes may be adjusted from 0 seconds to 18 hours.
   5. Ramp rate may be adjusted for each dimmer switch.
   6. Switch buttons may be bound to any load on any load controller or relay panel and are not load type dependent; each button may be bound to multiple loads.
   7. WattStopper part numbers: LMPW, LMDW. Available in white, light almond, ivory, grey, red and black; compatible with wall plates with decorator opening.

DIGITAL WALL SWITCHES

18.01 LOW VOLTAGE MOMENTARY PUSHBUTTON SWITCHES IN 1, 2, 3, 4, 5 AND 8 BUTTON CONFIGURATION. WALL SWITCHES SHALL INCLUDE THE FOLLOWING FEATURES:

A. Two-way infrared (IR) transceiver for use with personal and configuration remote controls.
B. Removable buttons for field replacement with engraved buttons and/or alternate color buttons. Button replacement may be completed without removing the switch from the wall.
C. Configuration LED on each switch that blinks to indicate data transmission.

D. Load/Scene Status LED on each switch button with the following characteristics:
   1. Bi-level LED
   2. Dim locator level indicates power to switch
   3. Bright status level indicates that load or scene is active
   4. Dimming switches shall include seven bi-level LEDs to indicate load levels using 14 steps.

E. Programmable control functionality including:
   1. Button priority may be configured to any BACnet priority level, from 1-16, corresponding to networked operation allowing local actions to utilize life safety priority
   2. Scene patterns may be saved to any button other than dimming rockers. Once set, buttons may be digitally locked to prevent overwriting of the preset levels.

F. All digital parameter data programmed into an individual wall switch shall be retained in non-volatile FLASH memory within the wall switch itself. Memory shall have an expected life of no less than 10 years.

18.02 BACNET OBJECT INFORMATION SHALL BE AVAILABLE FOR THE FOLLOWING OBJECTS:

A. Button state

B. Switch lock control

C. Switch lock status

18.03 TWO RJ-45 PORTS FOR CONNECTION TO DLM LOCAL NETWORK.

18.04 MULTIPLE DIGITAL WALL SWITCHES MAY BE INSTALLED IN A ROOM BY SIMPLY CONNECTING THEM TO THE FREE TOPOLOGY DLM LOCAL NETWORK. NO ADDITIONAL CONFIGURATION SHALL BE REQUIRED TO ACHIEVE MULTI-WAY SWITCHING.

18.05 THE FOLLOWING SWITCH ATTRIBUTES MAY BE CHANGED OR SELECTED USING A WIRELESS CONFIGURATION TOOL:

18.06 LOAD AND SCENE BUTTON FUNCTION MAY BE RECONFIGURED FOR INDIVIDUAL BUTTONS (FROM LOAD TO SCENE, AND VICE VERSA).

A. Individual button function may be configured to Toggle, On only or Off only.

B. Individual scenes may be locked to prevent unauthorized change.

C. Fade Up and Fade Down times for individual scenes may be adjusted from 0 seconds to 18 hours.

D. Ramp rate may be adjusted for each dimmer switch.

E. Switch buttons may be bound to any load on any load controller or relay panel and are not load type dependant; each button may be bound to multiple loads.

F. WattStopper product numbers: LMSW-101, LMSW-102, LMSW-103, LMSW-104, LMSW-105, LMSW-108, LMDM-101. Available in white, light almond, ivory, grey, red and black; compatible with wall plates with decorator opening.

DIGITAL DAYLIGHTING SENSORS

19.01 DIGITAL DAYLIGHTING SENSORS SHALL WORK WITH LOAD CONTROLLERS AND RELAY PANELS TO PROVIDE AUTOMATIC SWITCHING, BI-LEVEL, OR TRI-LEVEL OR DIMMING DAYLIGHT HARVESTING CAPABILITIES FOR ANY LOAD TYPE CONNECTED TO THE CONTROLLER OR PANEL. DAYLIGHTING SENSORS SHALL BE INTERCHANGEABLE WITHOUT THE NEED FOR REWIRING.

A. Closed loop sensors measure the ambient light in the space and control a single lighting zone.

B. Open loop sensors measure incoming daylight in the space, and are capable of controlling up to three lighting zones.

C. Dual loop sensors measure both ambient and incoming daylight in the space to insure that proper light levels are maintained as changes to reflective materials are made in a single zone.

19.02 DIGITAL DAYLIGHTING SENSORS SHALL INCLUDE THE FOLLOWING FEATURES:

A. The sensor's internal photodiode shall only measure lightwaves within the visible spectrum. The photodiode's spectral response curve shall closely match the entire photopic curve. The photodiode shall not measure energy in either the ultraviolet or infrared spectrums. The photocell shall have a sensitivity of less than 5% for any wavelengths less than 400 nanometers or greater than 700 nanometers.

B. Sensor light level range shall be from 1-6,553 footcandles (fc).

C. The capability of ON/OFF, bi-level or tri-level switching, or dimming, for each controlled zone, depending on the selection of load controller(s) and load binding to controller(s).

D. For switching daylight harvesting, the photosensor shall provide a field-selectable deadband, or a separation, between the "ON Setpoint" and the "OFF Setpoint" that will prevent the lights from cycling excessively after they turn off.

E. For dimming daylight harvesting, the photosensor shall provide the option, when the daylight contribution is sufficient, of turning lights off or dimming lights to a field-selectable minimum level.

F. Photosensors shall have a digital, independently configurable fade rate for both increasing and decreasing light level in units of percent per second.

G. Photosensors shall provide adjustable cut-off time. Cut-off time is defined by the number of selected minutes the load is at the minimum output before the load turns off. Selectable range between 0-240 minutes including option to never cut-off.

H. Optional wall switch override shall allow occupants to reduce lighting level to increase energy savings or, if permitted by system administrator, raise lighting levels for a selectable period of time or cycle of occupancy.

I. Integral infrared (IR) transceiver for configuration and/or commissioning with a handheld configuration tool, to transmit detected light level to wireless configuration tool, and for communication with personal remote controls.

J. Configuration LED status light on device that blinks to indicate data transmission.

K. Status LED indicates test mode, override mode and load binding.

L. Recessed switch on device to turn controlled load(s) ON and OFF.

M. BACnet object information shall be available for the following daylighting sensor objects, based on the specific photocell's settings:
   1. Light level
   2. Day and night setpoints
   3. Off time delay
   4. On and off setpoints
   5. Up to three zone setpoints
   6. Operating mode – on/off, bi-level, tri-level or dimming

N. One RJ-45 port for connection to DLM local network.

O. A choice of accessories to accommodate multiple mounting methods and building materials. The photosensors may be mounted on a ceiling tile, skylight light well, suspended lighting fixture or backbox. Standard tube photosensors accommodate mounting materials from 0-0.62" thickness (LMLS-400, LMLS-500). Extended tube photosensors accommodate mounting materials from 0.62"-1.25" thickness (LMLS-400-L, LMLS-500-L). Mounting brackets are compatible with J boxes (LMLS-MB1) and wall mounting (LMLS-MB2). LMLS-600 photosensor to be mounted on included bracket below skylight well.

P. Any load or group of loads in the room can be assigned to a daylighting zone

Q. Each load within a daylighting zone can be individually enabled or disabled for discrete control (load independence).

R. All digital parameter data programmed into a photosensor shall be retained in non-volatile FLASH memory within the photosensor itself. Memory shall have an expected life of no less than 10 years.

19.03 CLOSED LOOP DIGITAL PHOTOSENSORS SHALL INCLUDE THE FOLLOWING ADDITIONAL FEATURES:

A. An internal photodiode that measures light in a 100-degree angle, cutting off the unwanted light from bright sources outside of this cone.

B. Automatic self-calibration, initiated from the photosensor, a wireless configuration tool or a PC with appropriate software.

C. Automatically establishes application-specific setpoints following self-calibration. For switching operation, an adequate deadband between the ON and OFF setpoints shall prevent the lights from cycling; for dimming operation a sliding setpoint control algorithm with separate Day and Night setpoints shall prevent abrupt ramping of loads.

D. WattStopper Product Number: LMLS-400, LMLS-400-L.

19.04 OPEN LOOP DIGITAL PHOTOSENSORS SHALL INCLUDE THE FOLLOWING ADDITIONAL FEATURES:

A. An internal photodiode that measures light in a 60-degree angle (cutting off the unwanted light from the interior of the room).

B. Automatically establishes application-specific setpoints following manual calibration using a wireless configuration tool or a PC with appropriate software. For switching operation, an adequate deadband between the ON and OFF setpoints for each zone shall prevent the lights from cycling; for dimming operation, a proportional control algorithm shall maintain the design lighting level in each zone.

C. Each of the three discrete daylight zones can include any non overlapping group of loads in the room.

D. WattStopper Product Number: LMLS-500, LMLS-500-L.

19.05 DUAL LOOP DIGITAL PHOTOSENSORS SHALL INCLUDE THE FOLLOWING ADDITIONAL FEATURES:

A. Close loop portion of dual loop device must have an internal photodiode that measures light in a 100 degree angle, cutting off the unwanted light from sources outside of this con

B. Open loop portion of dual loop device must have an internal photodiode that can measure light in a 60 degree angle, cutting off the unwanted light from the interior of the room.

C. Automatically establishes application-specific set-points following self-calibration. For switching operation, an adequate deadband between the ON and OFF setpoints shall prevent the lights from cycling; for dimming operation a sliding setpoint control algorithm with separate Day and Night setpoints shall prevent abrupt ramping of load.

D. Device must reference closed loop photosensor information as a base line reference. The device must be able to analyze the open loop photosensor information to determine if an adjustment in light levels is required.

E. Device must be able to automatically commission setpoints each night to provide adjustments to electrical lighting based on changes in overall lighting in the space due to changes in reflectance within the space or changes to daylight contribution based on seasonal changes.

F. Device must include extendable mounting arm to properly position sensor within a skylight well.

G. WattStopper product number LMLS-600

DIGITAL PARTITION CONTROLS

20.01 PARTITION CONTROLS SHALL ENABLE MANUAL OR AUTOMATIC COORDINATION OF LIGHTING CONTROLS IN FLEXIBLE SPACES WITH UP TO FOUR MOVEABLE WALLS BY RECONFIGURING THE CONNECTED DIGITAL SWITCHES AND OCCUPANCY SENSORS.

20.02 FOUR-BUTTON LOW VOLTAGE PUSHBUTTON SWITCH FOR MANUAL CONTROL.

A. Two-way infrared (IR) transceiver for use with configuration remote control.

B. Removable buttons for field replacement with engraved buttons and/or alternate color buttons. Button replacement may be completed without removing the switch from the wall.

C. Configuration LED on each switch that blinks to indicate data transmission.

D. Each button represents one wall; Green button LED indicates status.

E. Two RJ-45 ports for connection to DLM local network.

F. WattStopper part number: LMPS-104. Available in white, light almond, ivory, grey and black; compatible with wall plates with decorator opening.

20.03 CONTACT CLOSURE INTERFACE FOR AUTOMATIC CONTROL VIA INPUT FROM LIMIT SWITCHES ON MOVABLE WALLS (BY OTHERS).

A. Operates on Class 2 power supplied by DLM local network.

B. Includes 24VDC output and four input terminals for maintained third party contract closure inputs.

C. Input max. sink/source current: 1-5mA
   1. Logic input signal voltage High: >18VDC
   2. Logic input signal voltage Low: <2VDC

D. Four status LEDs under hinged cover indicate if walls are open or closed; supports LMPS-104 as remote status indicator.

E. Two RJ-45 ports for connection to DLM local network.

F. WattStopper part number: LMIO-10

HANDHELD AND COMPUTER CONFIGURATION TOOLS

21.01 A WIRELESS CONFIGURATION TOOL FACILITATES OPTIONAL CUSTOMIZATION OF DLM LOCAL NETWORKS USING TWO-WAY INFRARED COMMUNICATIONS, WHILE PC SOFTWARE CONNECTS TO EACH LOCAL NETWORK VIA A USB INTERFACE.

21.02 FEATURES AND FUNCTIONALITY OF THE WIRELESS CONFIGURATION TOOL SHALL INCLUDE BUT NOT BE LIMITED TO:

A. Two-way infrared (IR) communication with DLM IR-enabled devices within a range of approximately 30 feet (914.4 cm).

B. High visibility organic LED (OLED) display, pushbutton user interface and menu-driven operation.

C. Must be able to read and modify parameters for load controllers and relay panels, occupancy sensors, wall switches, daylighting sensors, network bridges, and identify DLM devices by type and serial number.

D. Save up to eight occupancy sensor setting profiles, and apply profiles to selected sensors.

E. Temporarily adjust light level of any load(s) on the local network, and incorporate those levels in scene setting. Set room mode for testing of Normal Hours (NH) and After Hours (AH) parameter settings.

F. Adjust or fine-tune daylighting settings established during auto-configuration, and input light level data to complete configuration of open loop daylighting controls.

G. Set room mode for testing of Normal Hours (NH) and After Hours (AH) parameter settings.

H. Verify status of building level network devices.

21.03 WATTSTOPPER PRODUCT NUMBERS: LMCT-100, LMCI-100/LMCS-100

DLM SEGMENT NETWORK (ROOM TO ROOM NETWORK)

22.01 THE SEGMENT NETWORK SHALL BE A LINEAR TOPOLOGY, BACNET-BASED MS/TP SUBNET TO CONNECT DLM LOCAL NETWORKS (ROOMS) AND LMCP RELAY PANELS FOR CENTRALIZED CONTROL.

A. Each connected DLM local network shall include a single network bridge (LMBC-300), and the network bridge is the only room-based device that is connected to the segment network.

B. Network bridges, relay panels and segment managers shall include terminal blocks, with provisions for separate “in” and “out” terminations, for segment network connections.

C. The segment network shall utilize 1.5 twisted pair, shielded, cable supplied by the lighting control manufacturer. The maximum cable run for each segment is 4,000 feet (121920 cm). Conductor-to-conductor capacitance of the twisted pair shall be less than 30 pf/ft and have a characteristic impedance of 120 Ohms.

D. Network signal integrity requires that each conductor and ground wire be correctly terminated at every connected device.

E. Substitution of manufacturer-supplied cable must be pre-approved: Manufacturer will not certify network reliability, and reserves the right to void warranty, if non-approved cable is installed, and if terminations are not completed according to manufacturer’s specific requirements.

F. Segment networks shall be capable of connecting to BACnet-compliant BAS (provided by others) either directly, via MS/TP, or through NB-ROUTERs, via BACnet/IP or BACnet/Ethernet. Systems whose room-connected network infrastructure require gateway devices to provide BACnet data to a BAS are unacceptable.

22.02 WATTSTOPPER PRODUCT NUMBER: LM-MSTP, LM-MSTP-DB

NETWORK BRIDGE

23.01 THE NETWORK BRIDGE MODULE CONNECTS A DLM LOCAL NETWORK TO A BACNET-COMPLIANT SEGMENT NETWORK FOR COMMUNICATION BETWEEN ROOMS, RELAY PANELS AND A SEGMENT MANAGER OR BAS. EACH LOCAL NETWORK SHALL INCLUDE A NETWORK BRIDGE COMPONENT TO PROVIDE A CONNECTION TO THE LOCAL NETWORK ROOM DEVICES. THE NETWORK BRIDGE SHALL USE INDUSTRY STANDARD BACNET MS/TP NETWORK COMMUNICATION AND AN OPTICALLY ISOLATED EIA/TIA RS-485 TRANSCEIVER.

A. The network bridge shall be provided as a separate module connected on the local network through an available RJ-45 port.

B. Provide Plug n’ Go operation to automatically discover room devices connected to the local network and make all device parameters visible to the segment manager via the segment network. No commissioning shall be required for set up of the network bridge on the local network.

C. The network bridge shall automatically create standard BACnet objects for selected DLM devices to allow any BACnet-compliant BAS to include lighting control and power monitoring features as provided by the DLM devices on each local network. BACnet objects will be created for the addition or replacement of any given DLM device for the installed life of the system. Products requiring that an application-specific point database be loaded to create or map BACnet objects are not acceptable. Systems not capable of providing BACnet data for control devices via a dedicated BACnet Device ID and physical MS/TP termination per room are not acceptable. Standard BACnet objects shall be provided as follows:
   1. Read/write the normal or after hours schedule state for the room
   2. Read the detection state of each occupancy sensor
   3. Read the aggregate occupancy state of the room
   4. Read/write the On/Off state of loads
   5. Read/write the dimmed light level of loads

6. Read the button states of switches
7. Read total current in amps, and total power in watts through the load controller
8. Read/write occupancy sensor time delay, PIR sensitivity and ultrasonic sensitivity settings
9. Activate a preset scene for the room
10. Read/write daylight sensor fade time and day and night setpoints
11. Read the current light level, in footcandles, from interior and exterior photosensors and photocells
12. Set daylight sensor operating mode
13. Read/write wall switch lock status
14. Read watts per square foot for the entire controlled room
15. Write maximum light level per load for demand response mode
16. Read/write activation of demand response mode for the room
17. Activate/restore demand response mode for the room

23.02 WATTSTOPPER PRODUCT NUMBERS: LMBC-300

LMCP LIGHTING CONTROL PANELS AND LMZC ZONE CONTROLLER

24.01 HARDWARE:

PROVIDE LMCP LIGHTING CONTROL PANELS IN THE LOCATIONS AND CAPACITIES AS INDICATED ON THE PLANS AND SCHEDULES. EACH PANEL SHALL BE OF MODULAR CONSTRUCTION AND CONSIST OF THE FOLLOWING COMPONENTS:

A. Enclosure/Tub shall be NEMA 1, sized to accept an interior with 1 - 8 relays, 1 - 24 relays and 6 four-pole contactors, or 1 - 48 relays and 6 four-pole contactors.

B. Cover shall be configured for surface or flush wall mounting of the panel as indicated on the plans. LMCP panel cover shall have a hinged and lockable door with restricted access to line voltage section of the panel.

C. Interior assembly shall be supplied as a factory assembled component specifically designed and listed for field installation. The interior construction shall provide total isolation of high voltage (Class 1) wiring from low voltage (Class 2) wiring within the assembled panel. The interior assembly shall include intelligence boards, power supply, DIN rails for mounting optional Class 2 control devices, and individually replaceable latching type relays. The panel interiors shall include the following features:
   1. Removable, plug-in terminal blocks with connections for all low voltage terminations.
   2. Individual terminal block, override pushbutton, and LED status light for each relay.
   3. Direct wired switch inputs associated with each relay shall support 2-wire momentary switches only.
   4. Digital inputs (four RJ-45 jacks) shall support 1-, 2-, 3-, 4-, and 8-button digital switches; digital IO modules capable of receiving 0-5V or 0-10V analog photocell inputs; digital IO modules capable of receiving momentary or maintained contact closure inputs or analog sensor inputs; digital daylighting sensors; and digital occupancy sensors. Inputs are divided into two separate digital networks, each capable of supplying 250mA to connected devices.
   5. True relay state shall be indicated by the on-board LED and shall be available to external control devices and systems via BACnet.
   6. Automatically sequenced operation of relays to reduce impact on the electrical distribution system when large loads are controlled simultaneously.
   7. Group and pattern control of relays shall be provided through a simple keypad interface from a handheld IR programmer. Any set of relays can be associated with a group for direct on/off control or pattern (scene) control via a simple programming sequence using the relay override pushbuttons and LED displays for groups 1-8 or a handheld IR programmer for groups 1-99.
   8. Relay group status for shall be provided through LED indicators for groups 1-8 and via BACnet for groups 1-99. A solid LED indicates that the last group action called for an ON state and relays in the group are on or in a mixed state.

D. Single-pole latching relays with modular plug-in design. Relays shall provide the following ratings and features:
   1. Electrical:
      a. 30 amp ballast at 277V
      b. 20 amp ballast at 347V
      c. 20amp tungsten at 120V
      d. 30 amp resistive at 347V
      e. HP motor at 120V
      f. 14,000 amp short circuit current rating (SCCR) at 347V
      g. Relays shall be specifically UL 20 listed for control of plug-loads
   2. Mechanical:
      a. Replaceable, ½" KO mounting with removable Class 2 wire harness.
      b. Actuator on relay housing provides manual override and visual status indication, accessible from Class 2 section of panel.
      c. Dual line and load terminals each support two #14 - #12 solid or stranded conductors.
      d. Tested to 300,000 mechanical on/off cycles.

E. Isolated low voltage contacts provide for true relay status feedback and pilot light indication.

F. Power supply shall be a multi-voltage transformer assembly with rated power to supply all electronics, occupancy sensors, switches, pilot lights, and photocells as necessary to meet the project requirements. Power supply to have internal over-current protection with automatic reset and metal oxide varistor protection.

G. Where indicated, lighting control panels designated for control of emergency lighting shall be provided with factory installed provision for automatic by pass of relays controlling emergency circuits upon loss of normal power. Panels shall be properly listed and labeled for use on emergency lighting circuits and shall meet the requirements of UL924 and NFPA 70 - Article 700.

H. Integral system clock shall provide scheduling capabilities for panel-only projects without DLM segment networks or BAS control.
   1. Each panel shall include digital clock capability able to issue system wide automation commands to up to (11) eleven other panels for a total of (12) twelve networked lighting control panels. The clock shall provide capability for up to 254 independent schedule events per panel for each of the ninety-nine system wide channel groups.
   2. The clock capability of each panel shall support the time-based energy saving requirements of applicable local energy codes.
   3. The clock module shall provide astronomic capabilities, time delays, blink warning, daylight savings, and holiday functions and will include a battery back up for the clock function and program retention in non-volatile FLASH memory. Clocks that require multiple events to meet local code lighting shut off requirements shall not be allowed.
   4. The clock capability of each panel shall operate on a basis of ON/OFF or Normal Hours/After Hours messages to automation groups that implement pre-configured control scenarios. Scenarios shall include:
      a. Scheduled ON / OFF
      b. Manual ON / Scheduled OFF
      c. Astro ON / OFF (or Photo ON / OFF)
      d. Astro and Schedule ON / OFF (or Photo and Schedule ON / OFF)
   5. The user interface shall be a portable IR handheld remote control capable of programming any panel in the system (LMCT-100)
   6. The clock capability of each panel shall employ non-volatile memory and shall retain user programming and time for a minimum of 10 years.
   7. Schedules programmed into the clock of any one panel shall be capable of executing panel local schedule or Dark/Light (photocell or Astro) events for that panel in the event that global network communication is lost. Lighting control panels that are not capable of

executing events independently of the global network shall not be acceptable.

I. The lighting control panel can operate as a stand-alone system, or can support schedule, group, and photocell control functions, as configured in a Segment Manager controller, via a segment network connection.

J. The lighting control panel shall support digital communications to facilitate the extension of control to include interoperation with building automation systems and other intelligent field devices. Digital communications shall be RS485 MS/TP-based using the BACnet® protocol.
   1. The panel shall have provision for an individual BACnet device ID and shall support the full 222 range (0 – 4,193,304). The device ID description property shall be writable via the network to allow unique identification of the lighting control panel on the network.
   2. The panel shall support MS/TP MAC addresses in the range of 0 □ 127 and baud rates of 9600k, 38400k, 76800k, and 115.2k bits per second.
   3. Lighting control relays shall be controllable as binary output objects in the instance range of 1 □ 64. The state of each relay shall be readable and writable by the BAS via the object present value property.
   4. Lighting control relays shall report their true on/off state as binary input objects in the instance range of 1 □ 64.
   5. The 99 group Normal Hours/After Hours control objects associated with the panel shall be represented by binary value objects in the instance range of 201 □ 299. The occupancy state of each channel group shall be readable and writable by the BAS via the object present value property. Commanding 1 to a channel group will put all relays associated with the channel into the normal hours mode. Commanding 0 or NULL shall put the relays into the after hours mode.
   6. Setup and commissioning of the panel shall not require manufacturer-specific software or a computer. All configuration of the lighting control panel shall be performed using standard BACnet objects or via the handheld IR programming remote. Provide BACnet objects for panel setup and control as follows:
      a. Binary output objects in the instance range of 1 □ 64 (one per relay) for on/off control of relays.
      b. Binary value objects in the instance range of 1 □ 99 (one per channel) for normal hours/after hours schedule control.
      c. Binary input objects in the instance range of 1 □ 64 (one per relay) for reading true on/off state of the relays.
      d. Analog value objects in the instance range of 101 □ 199 (one per channel group) shall assign a blink warn time value to each channel. A value of 5 shall activate the blink warn feature for the channel and set a 5-minute grace-time period. A value of 250 shall activate the sweep feature for the channel and enable the use of sweep type automatic wall switches.
   7. The description property for all objects shall be writable via the network and shall be saved in non-volatile memory within the panel.
   8. The BO and BV 1 □ 99 objects shall support BACnet priority array with a relinquish default of off and after hours respectively. Prioritized writes to the channel BV objects shall propagate prioritized control to each member relay in a way analogous to the BACnet Channel object described in addendum aa. (http://www.bacnet.org/Addenda/Add-135-2010aa.pdf)
   9. Panel-aggregate control of relay Force Off at priority 2 shall be available via a single BV5 object. Force On at priority 1 shall be available via a single BV4 object.
   10. Lockout of all digital switch buttons connected to a given panel shall be command-able via a single BV2 object. The lock status of any connected switch station shall be represented as BV101-196.

K. In addition to the LMCP Relay Panels, an LMZC Zone Controller panel shall be available for zero-relay applications. The panel is designed for applications where LMFC-011 Fixture Controllers or other distributed load controllers are used to switch and/or dim the controlled loads. Key similarities to and differences from the LMCP panel design shall include:

1. The LMZC shall use the same intelligence board as the LMCP relay panel.
2. The LMZC shall not include relay driver boards or relays.
3. The LMZC shall have a removable interior section to facilitate installation, and a Tub/Cover. Cover is for surface mounting applications only.
4. The LMZC tub shall have two interior KOs to allow installation of LMPB-100 Power Boosters. Each installed Power Booster can provide an additional 150 mA for either of the two available DLM local networks provided by the LMZC.
5. All programming and networking (whether DLM Local Network and/or Segment Network) capabilities in the LMZC Zone Controller shall be similar to capabilities for LMCP relay panels, except for functions designed for panel-mounted HDR relays.

L. To aid in project start up, if LMFC Fixture Controllers are connected to an LMZC Zone Controller, Plug n' Go automatic configuration will establish a unique sequence of operation so that all LMFC-controlled fixtures will turn on to 50% output when any digital occupancy sensor detects motion..

M. WattStopper Product Number: Relay Panels: LMCP8, LMCP24 or LMCP48, Zone Controller: LMZC-301.

24.02 USER INTERFACE

EACH LIGHTING CONTROL PANEL SYSTEM SHALL BE SUPPLIED WITH AT LEAST (1) HANDHELD CONFIGURATION TOOL (LMCT-100). AS A REMOTE PROGRAMMING INTERFACE THE CONFIGURATION TOOL SHALL ALLOW SETUP, CONFIGURATION, AND DIAGNOSTICS OF THE PANEL WITHOUT THE NEED FOR SOFTWARE OR CONNECTION OF A COMPUTER. THE USER INTERFACE SHALL HAVE THE FOLLOWING PANEL-SPECIFIC FUNCTIONS AS A MINIMUM:

A. Set network parameters including panel device ID, MS/TP MAC address, baud rate and max master range.

B. Relay Group creation of up to 99 groups. Group creation shall result in programming of all seven key relay parameters for member relays. The seven parameters are as follows: After-hours Override Time Delay, Normal Hours Override Time Delay, Action on Transition to Normal Hours, Action on Transition to After Hours, Sensor Action During Normal Hours, Sensor Action During After Hours, Blink-Warn Time for After Hours.

C. Program up to 254 separate scheduled events. Events shall occur on seven day intervals with each day selectable as active or inactive, and shall be configurable as to whether the event is active on holidays. Holidays are also defined through the User Interface.

D. Program up to 32 separate Dark/Light events. Events shall have a selectable source as either calculated Astro with delay, or a digital IO module with an integral 0-5V or 0-10V analog photocell. Dark/Light events shall occur on seven day intervals with each day selectable as active or inactive, and shall be configurable as to whether the event is active on holidays.

E. Button binding of digital switches to groups shall be accessible via the handheld IR remote and accomplished from the digital switch station.

F. Programming of panel location information shall be accomplished by the handheld IR remote and include at a minimum LAT, LON, DST zone, and an approximate city/state location.

G. WattStopper Product Number: LMCT-100

SEGMENT MANAGER

25.01 FOR NETWORKED APPLICATIONS, THE DIGITAL LIGHTING MANAGEMENT SYSTEM SHALL INCLUDE AT LEAST ONE SEGMENT MANAGER TO MANAGE NETWORK COMMUNICATION. IT SHALL BE CAPABLE OF SERVING UP A GRAPHICAL USER INTERFACE VIA A STANDARD WEB BROWSER UTILIZING EITHER UNENCRYPTED TCP/IP TRAFFIC VIA A CONFIGURABLE PORT (DEFAULT IS 80) OR 256 BIT AES ENCRYPTED SSL TCP/IP TRAFFIC VIA A CONFIGURABLE PORT (DEFAULT IS 443).

25.02 EACH SEGMENT MANAGER SHALL HAVE INTEGRAL SUPPORT FOR AT LEAST THREE SEGMENT NETWORKS. SEGMENT NETWORKS MAY ALTERNATELY BE CONNECTED TO THE SEGMENT MANGER VIA EXTERNAL BACNET-TO-IP INTERFACE ROUTERS AND SWITCHES, USING STANDARD ETHERNET STRUCTURED WIRING. EACH ROUTER SHALL ACCOMMODATE ONE SEGMENT NETWORK. PROVIDE THE QUANTITY OF ROUTERS AND SWITCHES AS SHOWN ON THE PLANS.

25.03 OPERATIONAL FEATURES OF THE SEGMENT MANAGER SHALL INCLUDE THE FOLLOWING:

A. Connection to PC or LAN via standard Ethernet TCP/IP via standard Ethernet TCP/IP with the option to use SSL encrypted connections for all traffic.

B. Easy to learn and use graphical user interface, compatible with Internet Explorer 8, or equal browser. The Segment Manager shall not require installation of any lighting control software on an end-user PC.

C. Log in security capable of restricting some users to view-only or other limited operations.

D. Segment Manager shall provide two main sets of interface screens – those used to initially configure the unit (referred to as the config screens), and a those used to allow users to dynamic monitor the performance of their system, and provide a centralized scheduling interface.

Capabilities using the Config Screens shall include:

1. Automatic discovery of DLM devices and relay panels on the segment network(s). Commissioning beyond activation of the discovery function shall not be required to provide communication, monitoring or control of all local networks and lighting control panels.
2. Allow information for all discovered DLM devices to be imported into the Segment Manager via a single XML based site file from the WattStopper LMCS Software, significantly reducing the time needed to make a system usable by the end user. Importable information can include text descriptions of every DLM component and individual loads, and automatic creation of room location information and overall structure of DLM network. Info entered into LMCS should not have to be re-entered manually via keystrokes into the Segment Manager
3. After discovery, all rooms and panels shall be presented in a standard navigation tree format. Selecting a device from the tree will allow the device settings and operational parameters to be viewed and changed by the user.
4. Ability to view and modify DLM device operational parameters. It shall be possible to set device parameters independently for normal hours and after hours operation including sensor time delays and sensitivities, and load response to sensor including Manual-On or Auto-On.
5. Provide capabilities for integration with a BAS via BACnet protocol. At a minimum, the following points shall be available to the BAS via BACnet IP connection to the segment manager: room occupancy state; room schedule mode; room switch lock control; individual occupancy sensor state; room lighting power; room plug-load power; load ON/OFF state; load dimming level; panel channel schedule state; panel relay state; and Segment Manager Group schedule state control. Any of above items shall be capable of being moved into an “Export Table” that will provide any integrator with only the data they need, and by using the Export Table effectively create a firewall between the integrator’s request for info and the overall system performance.

E. Capabilities using the Segment Manager's Dashboard Screens shall include:
   1. A dynamic "tile" based interface that allows easy viewing of each individual room's lighting and plug load power consumption, and lighting and plug load power density (power consumption information requires Enhanced DLM Room and Plug Load Controllers with integral current transducers such as LMRC-21x).Tiles will be automatically organized according to location so a single tile for the building summarizes all information for tiles beneath it on every floor, in every area, in every room. Tiles shall be color coded based on three energy target parameters, allowing an owner to quickly identify rooms that are not performing efficiently. Tiles for rooms with occupancy sensors shall include an icon to indicate whether that room is occupied. Tiles shall be clickable, and when clicked the underlying hierarchical level of tiles shall become visible. The tile interface shall be accessible via mouse, or touch screen devices. Tiles shall be created automatically by the segment manager, based on the information found during the device discovery and/or information included in a file imported in from LMCS (such as tagged descriptions for each room) without any custom programming.
   2. Ability to set up schedules for DLM local networks (rooms) and panels. Schedules shall be capable of controlling individual rooms with either on/off or normal hours/after hours set controlled zones or areas to either a normal hours or after hours mode of operation. Support for annual schedules, holiday schedules and unique date-bound schedules, as well as astro On or astro Off events with offsets. Schedules shall be viable graphically as time bars in a screen set up to automatically show scheduled events by day, week or month.
   3. Ability to provide a simple time vs. power graph based on information stored in each Segment Manager's memory (typically two to three days' data).

F. If shown in the contract drawings, Segment Managers shall be integrated into a larger control network by the addition of a Network Supervisor package. The Supervisor is a server level computer running a version of the Segment Manager interface software with dedicated communication and networking capability, able to pull information automatically from each individual Segment Manager in the network. By using a Supervisor, information for individual Segment Managers can be accessed and stored on the Supervisor's hard drive, eliminating the risk of data being overwritten after a few days because of Segment Manager memory limits.

G. The Segment Manager shall allow access and control of the overall system database via Native Niagara AX FOX connectivity. Systems that must utilize a Tridium Niagara controller in addition to the programming, scheduling and configuration server are not acceptable.

25.04 SEGMENT MANAGER SHALL SUPPORT MULTIPLE DLM ROOMS AS FOLLOWS:

A. Support up to 120 network bridges and 900 digital in-room devices (LMSM-3E).

B. Support up to 300 network bridges and 2,200 digital in room devices, connected via network routers and switches (LMSM-6E).

25.05 WATTSTOPPER PRODUCT NUMBERS: LMSM-3E, LMSM-6E, LM-SUPERVISOR, NB-ROUTER, NB-SWITCH, NB-SWITCH-8, NB-SWITCH-16.

PROGRAMMING, CONFIGURATION AND DOCUMENTATION SOFTWARE

26.01 PC-NATIVE APPLICATION FOR OPTIONAL PROGRAMMING OF DETAILED TECHNICIAN-LEVEL PARAMETER INFORMATION FOR ALL DLM PRODUCTS, INCLUDING ALL PARAMETERS NOT ACCESSIBLE VIA BACNET AND THE HANDLED IR CONFIGURATION TOOL. SOFTWARE MUST BE CAPABLE OF ACCESSING ROOM-LEVEL PARAMETER INFORMATION LOCALLY WITHIN THE ROOM WHEN CONNECTED VIA THE OPTIONAL LMCI-100 USB PROGRAMMING ADAPTER, OR GLOBALLY FOR MANY SEGMENT NETWORKS SIMULTANEOUSLY UTILIZING STANDARD BACNET/IP COMMUNICATION.

26.02 ADDITIONAL PARAMETERS EXPOSED THROUGH THIS METHOD INCLUDE BUT ARE NOT LIMITED TO:

A. Occupancy sensor detection LED disable for performance and other aesthetic spaces where blinking LEDs present a distraction.

B. Six occupancy sensor action behaviors for each controlled load, separately configurable for normal hours and after hours modes. Modes include: No Action, Follow Off Only, Follow On Only, Follow On and Off, Follow On Only with Override Time Delay, Follow Off Only with Blink Warn Grace Time, Follow On and Off with Blink Warn Grace Time.

C. Separate fade time adjustments per load for both normal and after hours from 0 - 4 hours.

D. Configurable occupancy sensor re-trigger grace period from 0 - 4 minutes separate for both normal hours and after hours.

E. Separate normal hours and after hours per-load button mode with modes including: Do nothing, on only, off only, on and off.

F. Load control polarity reversal so that on events turn loads off and vice versa.

G. Per-load DR (demand response) shed level in units of percent.

H. Load output pulse mode in increments of 1second.

I. Fade trip point for each load for normal hours and after hours that establishes the dimmer command level at which a switched load closes its relay to allow for staggered On of switched loads in response to a dimmer.

26.03 GENERATION OF REPORTS AT THE WHOLE FILE, PARTIAL FILE, OR ROOM LEVEL. REPORTS INCLUDE BUT ARE NOT LIMITED TO:

A. Device list report: All devices in a project listed by type.

B. Load binding report: All load controller bindings showing interaction with sensors, switches, and daylighting.

C. BACnet points report: Per room Device ID report of the valid BACnet points for a given site's BOM.

D. Room summary report: Device manifest for each room, aggregated by common BOM, showing basic sequence of operations.

E. Device parameter report: Per-room lists of all configured parameters accessible via hand held IR programmer for use with O&M documentation.

F. Scene report: All project scene pattern values not left at defaults (i.e. 1 = all loads 100%, 2 = all loads 75%, 3 = all loads 50%, 4 = all loads 25%, 5-16 = same as scene 1).

G. Occupancy sensor report: Basic settings including time delay and sensitivity(ies) for all occupancy sensors.

26.04 NETWORK-WIDE PROGRAMMING OF PARAMETER DATA IN A SPREADSHEET-LIKE PROGRAMMING ENVIRONMENT INCLUDING BUT NOT LIMITED TO THE FOLLOWING OPERATIONS:

A. Set, copy/paste an entire project site of sensor time delays.

B. Set, copy/paste an entire project site of sensor sensitivity settings.

C. Search based on room name and text labels.

D. Filter by product type (i.e. LMRC-212) to allow parameter set by product.

E. Filter by parameter value to search for product with specific configurations.

26.05 NETWORK-WIDE FIRMWARE UPGRADING REMOTELY VIA THE BACNET/IP NETWORK.

A. Mass firmware update of entire rooms.

B. Mass firmware update of specifically selected rooms or areas.

C. Mass firmware upgrade of specific products.

26.06 WATTSTOPPER PRODUCT NUMBER: LMCS-100, LMCI-100

EMERGENCY LIGHTING CONTROL DEVICES

27.01 EMERGENCY LIGHTING CONTROL UNIT – A UL 924 LISTED DEVICE THAT MONITORS A SWITCHED CIRCUIT PROVIDING NORMAL LIGHTING TO AN AREA. THE UNIT PROVIDES NORMAL ON/OFF CONTROL OF EMERGENCY LIGHTING ALONG WITH THE NORMAL LIGHTING. UPON NORMAL POWER FAILURE THE EMERGENCY LIGHTING CIRCUIT WILL CLOSE, FORCING THE EMERGENCY LIGHTING ON UNTIL NORMAL POWER IS RESTORED. FEATURES INCLUDE:

A. 120/277 volts, 50/60 Hz, 20 amp ballast rating

B. Push to test button

C. Auxiliary contact for remote test or fire alarm system interface

27.02 WATTSTOPPER PRODUCT NUMBERS: ELCU-100, ELCU-200.

PART 2 EXECUTION

28.01 PRE-INSTALLATION MEETING

28.02 A FACTORY AUTHORIZED MANUFACTURER'S REPRESENTATIVE SHALL PROVIDE THE ELECTRICAL CONTRACTOR A FUNCTIONAL OVERVIEW OF THE LIGHTING CONTROL SYSTEM PRIOR TO INSTALLATION. THE CONTRACTOR SHALL SCHEDULE THE PRE-INSTALLATION SITE VISIT AFTER RECEIPT OF APPROVED SUBMITTALS TO REVIEW THE FOLLOWING:

A. Confirm the location and mounting of all digital devices, with special attention to placement of occupancy and daylighting sensors.

B. Review the specifications for low voltage control wiring and termination.

C. Discuss the functionality and configuration of all products, including sequences of operation, per design requirements.

D. Discuss requirements for integration with other trades.

CONTRACTOR INSTALLATION AND SERVICES

29.01 CONTRACTOR TO INSTALL ALL DEVICES AND WIRING IN A PROFESSIONAL MANNER. ALL LINE VOLTAGE CONNECTIONS TO BE TAGGED TO INDICATE CIRCUIT AND SWITCHED LEGS.

29.02 CONTRACTOR TO INSTALL ALL ROOM/AREA DEVICES USING MANUFACTURER'S FACTORY-TESTED CAT 5E CABLE WITH PRE-TERMINATED RJ-45 CONNECTORS. IF PRE-TERMINATED CABLE IS NOT USED FOR ROOM/AREA WIRING, THE CONTRACTOR IS RESPONSIBLE FOR TESTING EACH FIELD-TERMINATED CABLE FOLLOWING INSTALLATION, AND SHALL SUPPLY THE LIGHTING CONTROLS MANUFACTUERER WITH TEST RESULTS. CONTRACTOR TO INSTALL ANY ROOM TO ROOM NETWORK DEVICES USING MANUFACTURER-SUPPLIED LM-MSTP NETWORK WIRE. NETWORK WIRE SUBSTITUTION IS NOT PERMITTED AND MAY RESULT IN LOSS OF PRODUCT WARRANTY PER DLM SEGMENT NETWORK SECTION OF SPECIFICATION. LOW VOLTAGE WIRING TOPOLOGY MUST COMPLY WITH MANUFACTURER'S SPECIFICATIONS. CONTRACTOR SHALL ROUTE NETWORK WIRING AS SHOWN IN SUBMITTAL DRAWINGS AS CLOSELY AS POSSIBLE, AND SHALL DOCUMENT FINAL WIRING LOCATION, ROUTING AND TOPOLOGY ON AS BUILT DRAWINGS.

29.03 INSTALL THE WORK OF THIS SECTION IN ACCORDANCE WITH MANUFACTURER'S PRINTED INSTRUCTIONS UNLESS OTHERWISE INDICATED. BEFORE START UP, CONTRACTOR SHALL TEST ALL DEVICES TO ENSURE PROPER COMMUNICATION.

29.04 CALIBRATE ALL SENSOR TIME DELAYS AND SENSITIVITY TO GUARANTEE PROPER DETECTION OF OCCUPANTS AND ENERGY SAVINGS.

A. Adjust time delay so that controlled area remains lighted while occupied.

29.05 PROVIDE WRITTEN OR COMPUTER-GENERATED DOCUMENTATION ON THE CONFIGURATION OF THE SYSTEM INCLUDING ROOM BY ROOM DESCRIPTION INCLUDING:

A. Sensor parameters, time delays, sensitivities, and daylighting setpoints.

B. Sequence of operation, (e.g. manual ON, Auto OFF. etc.)

C. Load Parameters (e.g. blink warning, etc.)

29.06 POST START-UP TUNING – AFTER 30 DAYS FROM OCCUPANCY CONTRACTOR SHALL ADJUST SENSOR TIME DELAYS AND SENSITIVITIES TO MEET THE OWNER'S REQUIREMENTS. PROVIDE A DETAILED REPORT TO THE ARCHITECT / OWNER OF POST START-UP ACTIVITY.

FACTORY SERVICES

30.01 UPON COMPLETION OF THE INSTALLATION, THE MANUFACTURER'S FACTORY AUTHORIZED REPRESENTATIVE SHALL START UP AND VERIFY A COMPLETE FULLY FUNCTIONAL SYSTEM.

30.02 THE ELECTRICAL CONTRACTOR SHALL PROVIDE BOTH THE MANUFACTURER AND THE ELECTRICAL ENGINEER WITH THREE WEEKS WRITTEN NOTICE OF THE SYSTEM START UP AND ADJUSTMENT DATE.

30.03 UPON COMPLETION OF THE SYSTEM START UP, THE FACTORY-AUTHORIZED TECHNICIAN SHALL PROVIDE THE PROPER TRAINING TO THE OWNER'S PERSONNEL ON THE ADJUSTMENT AND MAINTENANCE OF THE SYSTEM

30.04 INCLUDE A CERTIFIED LIGHTING CONTROL ACCEPTANCE VERIFIED IN WRITING BY THE FACTORY AUTHORIZED REPRESENTATIVE.

COMMISSIONING SUPPORT SERVICES

31.01 ON THIS PROJECT, A COMMISSIONING AGENT WILL BE HIRED TO VERIFY THE INSTALLATION AND PROGRAMMING OF ALL BUILDING SYSTEMS, WHICH INCLUDES THE LIGHTING CONTROL SYSTEM. MANUFACTURER SHOULD INCLUDE AN EXTRA DAY OF TECHNICIAN'S TIME TO REVIEW THE FUNCTIONALITY AND SETTINGS OF THE LIGHTING CONTROL HARDWARE WITH THE COMMISSIONING AGENT, INCLUDING REVIEWING SUBMITTAL DRAWINGS AND ENSURING THAT INSTRUCTIONS ON HOW TO CONFIGURE EACH DEVICE ARE READILY AVAILABLE. MANUFACTURER IS NOT RESPONSIBLE FOR HELPING THE COMMISSIONING AGENT INSPECT THE INDIVIDUAL DEVICES. IT WILL BE THE COMMISSIONING AGENT'S RESPONSIBILITY TO CREATE AND COMPLETE ANY FORMS REQUIRED FOR THE COMMISSIONING PROCESS, ALTHOUGH THE MANUFACTURER OR CONTRACTOR MAY OFFER SPREADSHEETS AND/OR PRINTOUTS TO ASSIST THE AGENT WITH THIS TASK.

31.02 THE COMMISSIONING AGENT SHALL WORK WITH THE ELECTRICAL CONTRACTOR DURING INSTALLATION OF THE LIGHTING CONTROL HARDWARE TO BECOME FAMILIAR WITH THE SPECIFIC PRODUCTS. THE AGENT MAY ALSO ACCOMPANY THE MANUFACTURER'S TECHNICIANS DURING THEIR START-UP WORK TO BETTER UNDERSTAND THE PROCESS OF TESTING, CALIBRATION AND CONFIGURATION OF THE PRODUCTS. HOWEVER, THE CONTRACTOR AND MANUFACTURER SHALL ENSURE THAT INTERFACING WITH THE AGENT DOES NOT PREVENT THEM FROM COMPLETING THE REQUIREMENTS OUTLINED IN THE CONTRACT DOCUMENTS.

FINE TUNING AFTER SUBSTANTIAL COMPLETION

32.01 PROVIDE A FACTORY AUTHORIZED REPRESENTATIVE FOR FINE TUNING AND ADJUSTMENTS TO THE SYSTEM WITHIN 6 MONTHS AFTER SUBSTANTIAL COMPLETION AS COORDINATED AND REQUESTED BY THE OWNER. MODIFY AND ADJUST CONTROLS, SETTINGS, AND PROGRAMMING AS DIRECTED BY OWNER.

END OF SECTION 260923

SECTION 262213
LOW-VOLTAGE DISTRIBUTION TRANSFORMERS

PART 1 GENERAL

1.01 RELATED DOCUMENTS

A. Drawings and general provisions of the Contract, including General and Supplementary Conditions and Division 01 Specification Sections, apply to this Section.

1.02 SUMMARY

A. Section includes distribution, dry-type transformers with a nominal primary and secondary rating of 600 V and less, with capacities up to 1500 kVA.

1.03 ACTION SUBMITTALS

A. Product Data: For each type of product.
   1. Include construction details, material descriptions, dimensions of individual components and profiles, and finishes for each type and size of transformer.
   2. Include rated nameplate data, capacities, weights, dimensions, minimum clearances, installed devices and features, and performance for each type and size of transformer.

B. Shop Drawings:
   1. Detail equipment assemblies and indicate dimensions, weights, loads, required clearances, method of field assembly, components, and location and size of each field connection.
   2. Vibration Isolation Base Details: Detail fabrication including anchorages and attachments to structure and to supported equipment.
   3. Include diagrams for power, signal, and control wiring.

1.04 INFORMATIONAL SUBMITTALS

A. Qualification Data: For testing agency.

B. Seismic Qualification Data: Certificates, for transformers, accessories, and components, from manufacturer.
   1. Basis for Certification: Indicate whether withstand certification is based on actual test of assembled components or on calculation.
   2. Dimensioned Outline Drawings of Equipment Unit: Identify center of gravity and locate and describe mounting and anchorage provisions.
   3. Detailed description of equipment anchorage devices on which the certification is based and their installation requirements.
   4. Certification: Indicate that equipment meets Project seismic requirements.

C. Source quality-control reports.

D. Field quality-control reports.

1.05 CLOSEOUT SUBMITTALS

A. Operation and Maintenance Data: For transformers to include in emergency, operation, and maintenance manuals.

1.06 QUALITY ASSURANCE

A. Testing Agency Qualifications: Accredited by NETA.
   1. Testing Agency's Field Supervisor: Certified by NETA to supervise on-site testing.

1.07 DELIVERY, STORAGE, AND HANDLING

A. Inspection: On receipt, inspect for and note any shipping damage to packaging and transformer.
   1. If manufacturer packaging is removed for inspection, and transformer will be stored after inspection, re-package transformer using original or new packaging materials that provide protection equivalent to manufacturer's packaging.

B. Storage: Store in a warm, dry, and temperature-stable location in original shipping packaging.

C. Temporary Heating: Apply temporary heat according to manufacturer's written instructions within the enclosure of each ventilated-type unit, throughout periods during which equipment is not energized and when transformer is not in a space that is continuously under normal control of temperature and humidity.

D. Handling: Follow manufacturer's instructions for lifting and transporting transformers.

PART 2 PRODUCTS

2.01 MANUFACTURERS

A. Manufacturers: Subject to compliance with requirements, provide products by one of the following:
   1. ABB (Electrification Products Division).
   2. Eaton.
   3. Schneider Electric USA (Square D).
   4. Siemens Industry, Inc., Energy Management Division.

B. Source Limitations: Obtain each transformer type from single source from single manufacturer.

2.02 PERFORMANCE REQUIREMENTS

A. Seismic Performance: Transformers shall withstand the effects of earthquake motions determined according to ASCE/SEI 7.
   1. The term "withstand" means "the transformer will remain in place without separation of any parts when subjected to the seismic forces specified."

2.03 GENERAL TRANSFORMER REQUIREMENTS

A. Description: Factory-assembled and -tested, air-cooled units for 60-Hz service.

B. Comply with NFPA 70.
   1. Electrical Components, Devices, and Accessories: Listed and labeled as defined in NFPA 70, by a qualified testing agency, and marked for intended location and use.

C. Transformers Rated 15 kVA and Larger:
   1. Comply with 10 CFR 431 (DOE 2016) efficiency levels.
   2. Marked as compliant with DOE 2016 efficiency levels by an NRTL.

D. Shipping Restraints: Paint or otherwise color-code bolts, wedges, blocks, and other restraints that are to be removed after installation and before energizing. Use fluorescent colors that are easily identifiable inside the transformer enclosure.

2.04 DISTRIBUTION TRANSFORMERS

A. Comply with NFPA 70, and list and label as complying with UL 1561.

B. Provide transformers that are constructed to withstand seismic forces specified in Section 260548.16 "Seismic Controls for Electrical Systems."

C. Cores: Electrical grade, non-aging silicon steel with high permeability and low hysteresis losses.
   1. One leg per phase.
   2. Core volume shall allow efficient transformer operation at 10 percent above the nominal tap voltage.
   3. Grounded to enclosure.

D. Coils: Continuous windings except for taps.
   1. Coil Material: Copper.
   2. Internal Coil Connections: Brazed or pressure type.
   3. Terminal Connections: Bolted.

E. Encapsulation: Transformers smaller than 30 kVA shall have core and coils completely resin encapsulated.

F. Enclosure: Ventilated.
   1. NEMA 250: Core and coil shall be encapsulated within resin compound to seal out moisture and air.
   2. KVA Ratings: Based on convection cooling only and not relying on auxiliary fans.
   3. Wiring Compartment: Sized for conduit entry and wiring installation.
   4. Finish: Comply with NEMA 250.
      a. Finish Color: Gray weather-resistant enamel.

G. Taps for Transformers 3 kVA and Smaller: .

H. Taps for Transformers 7.5 to 24 kVA: One 5 percent tap above and one 5 percent tap below normal full capacity.

I. Taps for Transformers 25 kVA and Larger: Two 2.5 percent taps above and two 2.5 percent taps below normal full capacity.

J. Insulation Class, Smaller Than 30 kVA: 180 deg C, UL-component-recognized insulation system with a maximum of 115 deg C rise above 40 deg C ambient temperature.

K. Insulation Class, 30 kVA and Larger: 220 deg C, UL-component-recognized insulation system with a maximum of 115 deg C rise above 40 deg C ambient temperature.

L. Grounding: Provide ground-bar kit or a ground bar installed on the inside of the transformer enclosure.

M. K-Factor Rating: Transformers indicated to be K-factor rated shall comply with UL 1561 requirements for nonsinusoidal load current-handling capability to the degree defined by designated K-factor.
   1. Unit shall not overheat when carrying full-load current with harmonic distortion corresponding to designated K-factor, without exceeding the indicated insulation class in a 40 deg C maximum ambient and a 24-hour average ambient of 30 deg C.
   2. Indicate value of K-factor on transformer nameplate.
   3. Unit shall comply with requirements of DOE 2016 efficiency levels when tested according to NEMA TP 2 with a K-factor equal to one.

N. Electrostatic Shielding: Each winding shall have an independent, single, full-width copper electrostatic shield arranged to minimize interwinding capacitance.
   1. Arrange coil leads and terminal strips to minimize capacitive coupling between input and output terminals.
   2. Include special terminal for grounding the shield.

O. Neutral: Rated 200 percent of full load current for K-factor-rated transformers.

P. Wall Brackets: Wall brackets fabricated from design drawings signed and sealed by a licensed structural engineer.

Q. Low-Sound-Level Requirements: Maximum sound levels when factory tested according to IEEE C57.12.91, as follows:
   1. kVA and Less: 40 dBA.
   2. to 30.00 kVA: 45 dBA.
   3. to 50.00 kVA: 45 dBA for K-factors of 1, 4, and 9 48 dBA for K-factors of 13 and 20.
   4. to 150.00 kVA: 50 dBA for K-factors of 1, 4, and 9 53 dBA for K-factors of 13 and 20.
   5. 1 to 300.00 kVA: 55 dBA for K-factors of 1, 4, and 9 58 dBA for K-factors of 13 and 20.
   6. 1 to 500.00 kVA: 60 dBA for K-factors of 1, 4, and 9 63 dBA for K-factors of 13 and 20.

2.05 IDENTIFICATION

A. Nameplates: Engraved, laminated-acrylic or melamine plastic signs for each distribution transformer, mounted with corrosion-resistant screws. Nameplates and label products are specified in Section 260553 "Identification for Electrical Systems."

B. Nameplates: Self-adhesive label for each distribution transformer. Self-adhesive labels are specified in Section 260553 "Identification for Electrical Systems."

2.06 SOURCE QUALITY CONTROL

A. Test and inspect transformers according to IEEE C57.12.01 and IEEE C57.12.91.
   1. Resistance measurements of all windings at rated voltage connections and at all tap connections.
   2. Ratio tests at rated voltage connections and at all tap connections.
   3. Phase relation and polarity tests at rated voltage connections.
   4. No load losses, and excitation current and rated voltage at rated voltage connections.
   5. Impedance and load losses at rated current and rated frequency at rated voltage connections.
   6. Applied and induced tensile tests.
   7. Regulation and efficiency at rated load and voltage.
   8. Insulation-Resistance Tests:
      a. High-voltage to ground.
      b. Low-voltage to ground.
      c. High-voltage to low-voltage.
   9. Temperature tests.

PART 3 EXECUTION

3.01 EXAMINATION

A. Examine conditions for compliance with enclosure- and ambient-temperature requirements for each transformer.

B. Verify that field measurements are as needed to maintain working clearances required by NFPA 70 and manufacturer's written instructions.

C. Examine walls, floors, roofs, and concrete bases for suitable mounting conditions where transformers will be installed.

D. Verify that ground connections are in place and requirements in Section 260526 "Grounding and Bonding for Electrical Systems" have been met. Maximum ground resistance shall be 5 ohms at location of transformer.

E. Environment: Enclosures shall be rated for the environment in which they are located. Covers for NEMA 250, Type 4X enclosures shall not cause accessibility problems.

F. Proceed with installation only after unsatisfactory conditions have been corrected.

3.02 INSTALLATION

A. Install wall-mounted transformers level and plumb with wall brackets fabricated by transformer manufacturer or from design drawings signed and sealed by a licensed structural engineer.
   1. Coordinate installation of wall-mounted and structure-hanging supports with actual transformer provided.
   2. Brace wall-mounted transformers as specified in Section 260548.16 "Seismic Controls for Electrical Systems."

B. Install transformers level and plumb on a concrete base with vibration-dampening supports. Locate transformers away from corners and not parallel to adjacent wall surface.

C. Construct concrete bases according to Section 033000 "Cast-in-Place Concrete" and anchor floor-mounted transformers according to manufacturer's written instructions, seismic codes applicable to Project, and requirements in Section 260529 "Hangers and Supports for Electrical Systems."
   1. Coordinate size and location of concrete bases with actual transformer provided. Cast anchor-bolt inserts into bases. Concrete, reinforcement, and formwork requirements are specified with concrete.

D. Secure transformer to concrete base according to manufacturer's written instructions.

E. Secure covers to enclosure and tighten all bolts to manufacturer-recommended torques to reduce noise generation.

F. Remove shipping bolts, blocking, and wedges.

3.03 CONNECTIONS

A. Ground equipment according to Section 260526 "Grounding and Bonding for Electrical Systems."

B. Connect wiring according to Section 260519 "Low-Voltage Electrical Power Conductors and Cables."

C. Tighten electrical connectors and terminals according to manufacturer's published torque-tightening values. If manufacturer's torque values are not indicated, use those specified in UL 486A-486B.

D. Provide flexible connections at all conduit and conductor terminations and supports to eliminate sound and vibration transmission to the building structure.

3.04 FIELD QUALITY CONTROL

A. Testing Agency: Owner will engage a qualified testing agency to perform tests and inspections.

B. Testing Agency: Engage a qualified testing agency to perform tests and inspections.

C. Manufacturer's Field Service: Engage a factory-authorized service representative to test and inspect components, assemblies, and equipment installations, including connections.

D. Perform tests and inspections.

E. Small (Up to 167-kVA Single-Phase or 500-kVA Three-Phase) Dry-Type Transformer Field Tests:
   1. Visual and Mechanical Inspection.
      a. Inspect physical and mechanical condition.
      b. Inspect anchorage, alignment, and grounding.
      c. Verify that resilient mounts are free and that any shipping brackets have been removed.
      d. Verify the unit is clean.
      e. Perform specific inspections and mechanical tests recommended by manufacturer.
      f. Verify that as-left tap connections are as specified.
      g. Verify the presence of surge arresters and that their ratings are as specified.
   2. Electrical Tests:
      a. Measure resistance at each winding, tap, and bolted connection.
      b. Perform insulation-resistance tests winding-to-winding and each winding-to-ground. Apply voltage according to manufacturer's published data. In the absence of manufacturer's published data, comply with NETA ATS, Table 100.5. Calculate polarization index: the value of the index shall not be less than 1.0.
      c. Perform turns-ratio tests at all tap positions. Test results shall not deviate by more than one-half percent from either the adjacent coils or the calculated ratio. If test fails, replace the transformer.
      d. Verify correct secondary voltage, phase-to-phase and phase-to-neutral, after energization and prior to loading.

F. Large (Larger Than 167-kVA Single Phase or 500-kVA Three Phase) Dry-Type Transformer Field Tests:
   1. Visual and Mechanical Inspection:
      a. Inspect physical and mechanical condition.
      b. Inspect anchorage, alignment, and grounding.
      c. Verify that resilient mounts are free and that any shipping brackets have been removed.
      d. Verify the unit is clean.
      e. Perform specific inspections and mechanical tests recommended by manufacturer.
      f. Verify that as-left tap connections are as specified.
      g. Verify the presence of surge arresters and that their ratings are as specified.

2. Electrical Tests:
    a. Measure resistance at each winding, tap, and bolted connection.
    b. Perform insulation-resistance tests winding-to-winding and each winding-to-ground. Apply voltage according to manufacturer's published data. In the absence of manufacturer's published data, comply with NETA ATS, Table 100.5. Calculate polarization index: the value of the index shall not be less than 1.0.
    c. Perform power-factor or dissipation-factor tests on all windings.
    d. Perform turns-ratio tests at all tap positions. Test results shall not deviate by more than one-half percent from either the adjacent coils or the calculated ratio. If test fails, replace the transformer.
    e. Perform an excitation-current test on each phase.
    f. Perform an applied voltage test on all high- and low-voltage windings to ground. See IEEE C57.12.91, Sections 10.2 and 10.9.
    g. Verify correct secondary voltage, phase-to-phase and phase-to-neutral, after energization and prior to loading.

G. Remove and replace units that do not pass tests or inspections and retest as specified above.

H. Infrared Scanning: Two months after Substantial Completion, perform an infrared scan of transformer connections.
    1. Use an infrared-scanning device designed to measure temperature or detect significant deviations from normal values. Provide documentation of device calibration.
    2. Perform two follow-up infrared scans of transformers, one at four months and the other at 11 months after Substantial Completion.
    3. Prepare a certified report identifying transformer checked and describing results of scanning. Include notation of deficiencies detected, remedial action taken, and scanning observations after remedial action.

I. Test Labeling: On completion of satisfactory testing of each unit, attach a dated and signed "Satisfactory Test" label to tested component.

3.05 ADJUSTING

A. Record transformer secondary voltage at each unit for at least 48 hours of typical occupancy period. Adjust transformer taps to provide optimum voltage conditions at secondary terminals. Optimum is defined as not exceeding nameplate voltage plus 5 percent and not being lower than nameplate voltage minus 3 percent at maximum load conditions. Submit recording and tap settings as test results.

B. Output Settings Report: Prepare a written report recording output voltages and tap settings.

3.06 CLEANING

A. Vacuum dirt and debris; do not use compressed air to assist in cleaning.

END OF SECTION 262213

SECTION 262413
SWITCHBOARDS

PART 1 GENERAL

1.01 RELATED DOCUMENTS

A. Drawings and general provisions of the Contract, including General and Supplementary Conditions and Division 01 Specification Sections, apply to this Section.

1.02 SUMMARY

A. Section Includes:
   1. Service and distribution switchboards rated 600 V and less.
   2. Transient voltage suppression devices, factory installed.
   3. Disconnecting and overcurrent protective devices.
   4. Instrumentation.
   5. Control power.
   6. Accessory components and features.
   7. Identification.

B. Related Sections include the following:
   1. Division 26 Section "Transient Voltage Suppression for Low-Voltage Electrical Power Circuits " for TVSS units that are factory-installed in switchboards.
   2. Division 26 Section "Electricity Metering" for metering units that are installed in switchboards.

1.03 PERFORMANCE REQUIREMENTS

A. Seismic Performance: Switchboards shall withstand the effects of earthquake motions determined according to SEI/ASCE 7.
   1. The term "withstand" means "the unit will remain in place without separation of any parts from the device when subjected to the seismic forces specified and the unit will be fully operational after the seismic event."

1.04 SUBMITTALS

A. Product Data: For each type of switchboard, overcurrent protective device, transient voltage suppression device, ground-fault protector, accessory, and component indicated. Include dimensions and manufacturers' technical data on features, performance, electrical characteristics, ratings, accessories, and finishes.

B. Shop Drawings: For each switchboard and related equipment.
   1. Include dimensioned plans, elevations, sections, and details, including required clearances and service space around equipment. Show tabulations of installed devices, equipment features, and ratings.
   2. Detail enclosure types for types other than NEMA 250, Type 1.
   3. Detail bus configuration, current, and voltage ratings.
   4. Detail short-circuit current rating of switchboards and overcurrent protective devices.
   5. Include descriptive documentation of optional barriers specified for electrical insulation and isolation.
   6. Detail utility company's metering provisions with indication of approval by utility company.
   7. Include evidence of NRTL listing for series rating of installed devices.
   8. Detail features, characteristics, ratings, and factory settings of individual overcurrent protective devices and auxiliary components.
   9. Include time-current coordination curves for each type and rating of overcurrent protective device included in switchboards. Submit on translucent log-log graft paper; include selectable ranges for each type of overcurrent protective device.
   10. Include schematic and wiring diagrams for power, signal, and control wiring.

C. Seismic Qualification Certificates: Submit certification that switchboards, overcurrent protective devices, accessories, and components will withstand seismic forces defined in Division 26

Section "Vibration and Seismic Controls for Electrical Systems." Include the following:

1. Basis for Certification: Indicate whether withstand certification is based on actual test of assembled components or on calculation.
2. Dimensioned Outline Drawings of Equipment Unit: Identify center of gravity and locate and describe mounting and anchorage provisions.
3. Detailed description of equipment anchorage devices on which the certification is based and their installation requirements.

D. Field Quality-Control Reports:
1. Test procedures used.
2. Test results that comply with requirements.
3. Results of failed tests and corrective action taken to achieve test results that comply with requirements.

E. Operation and Maintenance Data: For switchboards and components to include in emergency, operation, and maintenance manuals. In addition to items specified in Division 01 Section "Operation and Maintenance Data," include the following:
1. Routine maintenance requirements for switchboards and all installed components.
2. Manufacturer's written instructions for testing and adjusting overcurrent protective devices.
3. Time-current coordination curves for each type and rating of overcurrent protective device included in switchboards. Submit on translucent log-log graft paper; include selectable ranges for each type of overcurrent protective device.

1.05 QUALITY ASSURANCE

A. Installer Qualifications: An employer of workers qualified as defined in NEMA PB 2.1 and trained in electrical safety as required by NFPA 70E.

B. Source Limitations: Obtain switchboards, overcurrent protective devices, components, and accessories from single source from single manufacturer.

C. Product Selection for Restricted Space: Drawings indicate maximum dimensions for switchboards including clearances between switchboards and adjacent surfaces and other items. Comply with indicated maximum dimensions.

D. Electrical Components, Devices, and Accessories: Listed and labeled as defined in NFPA 70, by a qualified testing agency, and marked for intended location and application.

E. Comply with NEMA PB 2.

F. Comply with NFPA 70.

G. Comply with UL 891.

1.06 DELIVERY, STORAGE, AND HANDLING

A. Deliver switchboards in sections or lengths that can be moved past obstructions in delivery path.

B. Remove loose packing and flammable materials from inside switchboards and to prevent condensation.

C. Handle and prepare switchboards for installation according to NEMA PB 2.1.

D. Store switchboard indoors in clean dry space with uniform temperature to prevent condensation. Protect switchboard from exposure to dirt, fumes, water, corrosive substances, and physical damage.

E. Furnishing contractor is responsible for the turning over of equipment to the installing contractor. This entails timely communication and availability for exchange of ownership. A visual inspection and pictures shall be taken at the time of release by both parties demonstrating the equipment condition. The installing contractor shall provide pictures, from the time of transfer, to the furnishing contractor and engineer for documentation. The contractor shall conduct any tests within 2 business days of receiving the equipment and provide all results to the furnishing contractor and engineer for documentation.

1.07 PROJECT CONDITIONS

A. Installation Pathway: Remove and replace access fencing, doors, lift-out panels, and structures to provide pathway for moving switchboards into place.

B. Environmental Limitations:
   1. Do not deliver or install switchboards until spaces are enclosed and weathertight, wet work in spaces is complete and dry, work above switchboards is complete, and temporary HVAC system is operating and maintaining ambient temperature and humidity conditions at occupancy levels during the remainder of the construction period.
   2. Rate equipment for continuous operation under the following conditions unless otherwise indicated:
      a. Ambient Temperature: Not exceeding 104 deg F (40 deg C).
      b. Altitude: Not exceeding 6600 feet (201168 cm).

C. Service Conditions: NEMA PB 2, usual service conditions, as follows:
   1. Ambient temperatures within limits specified.
   2. Altitude not exceeding 6600 feet (201168 cm).

D. Interruption of Existing Electric Service: Do not interrupt electric service to facilities occupied by Owner or others unless permitted under the following conditions and then only after arranging to provide temporary electric service according to requirements indicated:
   1. Notify Engineer and Owner no fewer than seven days in advance of proposed interruption of electric service.
   2. Indicate method of providing temporary electric service.
   3. Do not proceed with interruption of electric service without Owner's written permission.
   4. Comply with NFPA 70E.

1.08 COORDINATION

A. Coordinate layout and installation of switchboards and components with other construction that penetrates walls or is supported by them, including electrical and other types of equipment, raceways, piping, encumbrances to workspace clearance requirements, and adjacent surfaces.

B. Maintain required workspace clearances and required clearances for equipment access doors and panels.

C. Coordinate with work of other trades so that piping, ductwork or any equipment foreign to the electrical installation is not located directly above switchboards.

D. Coordinate sizes and locations of concrete bases with actual equipment provided. Cast anchor-bolt inserts into bases.

1.09 EXTRA MATERIALS

A. Furnish extra materials that match products installed and that are packaged with protective covering for storage and identified with labels describing contents.
   1. Potential Transformer Fuses: Equal to 10 percent of quantity installed for each size and type, but no fewer than two of each size and type.
   2. Control-Power Fuses: Equal to 10 percent of quantity installed for each size and type, but no fewer than two of each size and type.
   3. Fuses for Fused Switches: Equal to 10 percent of quantity installed for each size and type, but no fewer than three of each size and type.
   4. Indicating Lights: Equal to 10 percent of quantity installed for each size and type, but no fewer than one of each size and type.

PART 2 PRODUCTS

2.01 PROCUREMENT

A. Furnishing contractor is in the process of procuring the equipment.

2.02 IDENTIFICATION

A. Service Equipment Label: NRTL labeled for use as service equipment for switchboards with one or more service disconnecting and overcurrent protective devices.

PART 3 EXECUTION

3.01 APPLICATION

A. Circuit Breaker Types:
   1. Circuit Breakers 400A and larger: Solid-state, adjustable with LSI adjustments. For 480V circuit breakers 1000A and larger provide LSIG adjustments.
   2. Circuit Breakers less than 400A: Molded case with instantaneous adjustments.

3.02 EXAMINATION

A. Receive, inspect, handle, and store switchboards according to NEMA PB 2.1.

B. Examine switchboards before installation. Reject switchboards that are moisture damaged or physically damaged.

C. Examine elements and surfaces to receive switchboards for compliance with installation tolerances and other conditions affecting performance of the Work.

D. Proceed with installation only after unsatisfactory conditions have been corrected.

3.03 INSTALLATION

A. Install switchboards and accessories according to NEMA PB 2.1.

B. Equipment Mounting: Install switchboards on concrete base, 4-inch (100-mm) nominal thickness. Comply with requirements for concrete base specified in Division 03 Section "Cast-in-Place Concrete."
   1. Install dowel rods to connect concrete base to concrete floor. Unless otherwise indicated, install dowel rods on 18-inch (450-mm) centers around the full perimeter of concrete base.
   2. For supported equipment, install epoxy-coated anchor bolts that extend through concrete base and anchor into structural concrete floor.
   3. Place and secure anchorage devices. Use setting drawings, templates, diagrams, instructions, and directions furnished with items to be embedded.
   4. Install anchor bolts to elevations required for proper attachment to switchboards.

C. Temporary Lifting Provisions: Remove temporary lifting eyes, channels, and brackets and temporary blocking of moving parts from switchboard units and components.

D. Comply with mounting and anchoring requirements specified in Division 26 Section "Vibration and Seismic Controls for Electrical Systems."

E. Operating Instructions: Frame and mount the printed basic operating instructions for switchboards, including control and key interlocking sequences and emergency procedures. Fabricate frame of finished wood or metal and cover instructions with clear acrylic plastic. Mount on front of switchboards.

F. Install filler plates in unused spaces of panel-mounted sections.

G. Install overcurrent protective devices, transient voltage suppression devices, and instrumentation.
   1. Set field-adjustable switches and circuit-breaker trip ranges.

H. Install spare-fuse cabinet within the vicinity of the building main switchboard..

I. Comply with NECA 1.

3.04 IDENTIFICATION

A. Identify field-installed conductors, interconnecting wiring, and components; provide warning signs complying with requirements for identification specified in Division 26 Section "Identification for Electrical Systems."

B. Switchboard Nameplates: Label each switchboard compartment with a nameplate complying with requirements for identification specified in Division 26 Section "Identification for Electrical Systems."

C. Device Nameplates: Label each disconnecting and overcurrent protective device and each meter and control device mounted in compartment doors with a nameplate complying with requirements for identification specified in Division 26 Section "Identification for Electrical Systems."

3.05 FIELD QUALITY CONTROL

A. Manufacturer's Field Service: Engage a factory-authorized service representative to inspect, test, and adjust components, assemblies, and equipment installations, including connections.

B. Perform tests and inspections.
   1. Manufacturer's Field Service: Engage a factory-authorized service representative to inspect components, assemblies, and equipment installations, including connections, and to assist in testing.

C. Acceptance Testing Preparation:
   1. Test insulation resistance for each switchboard bus, component, connecting supply, feeder, and control circuit.
   2. Test continuity of each circuit.

D. Tests and Inspections:
   1. Perform each visual and mechanical inspection and electrical test stated in NETA Acceptance Testing Specification. Certify compliance with test parameters.
   2. Correct malfunctioning units on-site, where possible, and retest to demonstrate compliance; otherwise, replace with new units and retest.
   3. Test and adjust controls, remote monitoring, and safeties. Replace damaged and malfunctioning controls and equipment.

E. Switchboard will be considered defective if it does not pass tests and inspections.

F. Prepare test and inspection reports, including a certified report that identifies switchboards included and that describes scanning results. Include notation of deficiencies detected, remedial action taken, and observations after remedial action.

3.06 ADJUSTING

A. Adjust moving parts and operable components to function smoothly, and lubricate as recommended by manufacturer.

B. Set field-adjustable circuit-breaker trip ranges as indicated.

3.07 PROTECTION

A. Temporary Heating: Apply temporary heat, to maintain temperature according to manufacturer's written instructions, until switchboard is ready to be energized and placed into service.

3.08 DEMONSTRATION

A. Engage a factory-authorized service representative to train Owner's maintenance personnel to adjust, operate, and maintain switchboards, overcurrent protective devices, instrumentation, and accessories, and to use and reprogram microprocessor-based trip, monitoring, and communication units.

END OF SECTION 262413

This page intentionally left blank

SECTION 262416
PANELBOARDS

PART 1 GENERAL

1.01 RELATED DOCUMENTS

A. Drawings and general provisions of the Contract, including General and Supplementary Conditions and Division 01 Specification Sections, apply to this Section.

1.02 SUMMARY

A. Section Includes:
   1. Distribution panelboards.
   2. Lighting and appliance branch-circuit panelboards.

1.03 PERFORMANCE REQUIREMENTS

A. Seismic Performance: Panelboards shall withstand the effects of earthquake motions determined according to SEI/ASCE 7.
   1. The term "withstand" means "the unit will remain in place without separation of any parts from the device when subjected to the seismic forces specified."

1.04 SUBMITTALS

A. Product Data: For each type of panelboard, switching and overcurrent protective device, accessory, and component indicated. Include dimensions and manufacturers' technical data on features, performance, electrical characteristics, ratings, and finishes.

B. Shop Drawings: For each panelboard and related equipment.
   1. Include dimensioned plans, elevations, sections, and details. Show tabulations of installed devices, equipment features, and ratings.
   2. Detail enclosure types and details for types other than NEMA 250, Type 1.
   3. Detail bus configuration, current, and voltage ratings.
   4. Short-circuit current rating of panelboards and overcurrent protective devices.
   5. Include evidence of NRTL listing for series rating of installed devices.
   6. Detail features, characteristics, ratings, and factory settings of individual overcurrent protective devices and auxiliary components.
   7. Include wiring diagrams for power, signal, and control wiring.
   8. Include time-current coordination curves for each type and rating of overcurrent protective device included in panelboards. Submit on translucent log-log graft paper; include selectable ranges for each type of overcurrent protective device.

C. Seismic Qualification Certificates: Submit certification that panelboards, overcurrent protective devices, accessories, and components will withstand seismic forces defined in Division 26 Section "Vibration and Seismic Controls for Electrical Systems." Include the following:
   1. Basis for Certification: Indicate whether withstand certification is based on actual test of assembled components or on calculation.
   2. Dimensioned Outline Drawings of Equipment Unit: Identify center of gravity and locate and describe mounting and anchorage provisions.
   3. Detailed description of equipment anchorage devices on which the certification is based and their installation requirements.

D. Field Quality-Control Reports:
   1. Test procedures used.
   2. Test results that comply with requirements.
   3. Results of failed tests and corrective action taken to achieve test results that comply with requirements.

E. Panelboard Schedules: For installation in panelboards

F. Operation and Maintenance Data: For panelboards and components to include in emergency, operation, and maintenance manuals. In addition to items specified in Division 01 Section "Operation and Maintenance Data," include the following:

1. Manufacturer's written instructions for testing and adjusting overcurrent protective devices.
2. Time-current curves, including selectable ranges for each type of overcurrent protective device that allows adjustments.

1.05 QUALITY ASSURANCE

A. Source Limitations: Obtain panelboards, overcurrent protective devices, components, and accessories from single source from single manufacturer.

B. Product Selection for Restricted Space: Drawings indicate maximum dimensions for panelboards including clearances between panelboards and adjacent surfaces and other items. Comply with indicated maximum dimensions.

C. Electrical Components, Devices, and Accessories: Listed and labeled as defined in NFPA 70, by a qualified testing agency, and marked for intended location and application.

D. Comply with NEMA PB 1.

E. Comply with NFPA 70.

1.06 DELIVERY, STORAGE, AND HANDLING

A. Remove loose packing and flammable materials from inside panelboards; install temporary electric heating (250 W per panelboard) to prevent condensation.

B. Handle and prepare panelboards for installation according to NEMA PB 1.

1.07 PROJECT CONDITIONS

A. Environmental Limitations:
1. Do not deliver or install panelboards until spaces are enclosed and weathertight, wet work in spaces is complete and dry, work above panelboards is complete, and temporary HVAC system is operating and maintaining ambient temperature and humidity conditions at occupancy levels during the remainder of the construction period.
2. Rate equipment for continuous operation under the following conditions unless otherwise indicated:
   a. Ambient Temperature: Not exceeding minus 22 deg F (minus 30 deg C) to plus 104 deg F (plus 40 deg C).
   b. Altitude: Not exceeding 6600 feet (201168 cm).

B. Service Conditions: NEMA PB 1, usual service conditions, as follows:
1. Ambient temperatures within limits specified.
2. Altitude not exceeding 6600 feet (201168 cm).

C. Interruption of Existing Electric Service: Do not interrupt electric service to facilities occupied by Owner or others unless permitted under the following conditions and then only after arranging to provide temporary electric service according to requirements indicated:
1. Notify Engineer and Owner no fewer than two days in advance of proposed interruption of electric service.
2. Do not proceed with interruption of electric service without Engineer's and Owner's written permission.
3. Comply with NFPA 70E.

1.08 COORDINATION

A. Coordinate layout and installation of panelboards and components with other construction that penetrates walls or is supported by them, including electrical and other types of equipment, raceways, piping, encumbrances to workspace clearance requirements, and adjacent surfaces.

B. Maintain required workspace clearances and required clearances for equipment access doors and panels.

C. Coordinate with work of other trades so that piping, ductwork or any equipment foreign to the electrical installation is not located directly above panelboards.

D. Coordinate sizes and locations of concrete bases with actual equipment provided. Cast anchor-bolt inserts into bases. Concrete, reinforcement, and formwork requirements are specified in Division 03.

1.09 EXTRA MATERIALS

A. Furnish extra materials that match products installed and that are packaged with protective covering for storage and identified with labels describing contents.
   1. Keys: Two spares for each type of panelboard cabinet lock.
   2. Fuses for Fused Switches: Equal to 10 percent of quantity installed for each size and type, but no fewer than three of each size and type.

PART 2 PRODUCTS

2.01 GENERAL REQUIREMENTS FOR PANELBOARDS

A. Fabricate and test panelboards according to IEEE 344 to withstand seismic forces defined in Division 26 Section "Vibration and Seismic Controls for Electrical Systems."

B. Enclosures: Flush- and surface-mounted cabinets as indicated.
   1. Rated for environmental conditions at installed location.
      a. Indoor Dry and Clean Locations: NEMA 250, Type 1.
      b. Outdoor Locations: NEMA 250, Type 3R.
      c. Kitchen Areas: NEMA 250, Type 4X.
      d. Other Wet or Damp Indoor Locations: NEMA 250, Type 4.
      e. Indoor Locations Subject to Dust, Falling Dirt, and Dripping Noncorrosive Liquids: NEMA 250, Type 12.
   2. Hinged Front Cover: Entire front trim hinged to box and with standard door within door cover.
   3. Finishes:
      a. Panels and Trim: Steel, factory finished immediately after cleaning and pretreating with manufacturer's standard two-coat, baked-on finish consisting of prime coat and thermosetting topcoat.
      b. Back Boxes: Galvanized steel.
   4. Directory Card: Inside panelboard door, mounted in metal frame with transparent protective cover.

C. Incoming Mains Location: Top and bottom.

D. Phase, Neutral, and Ground Buses:
   1. Material: Hard-drawn copper, 98 percent conductivity.
   2. Equipment Ground Bus: Adequate for feeder and branch-circuit equipment grounding conductors; bonded to box.
   3. Isolated Ground Bus: Adequate for branch-circuit isolated ground conductors; insulated from box.
   4. Extra-Capacity Neutral Bus: Neutral bus rated 200 percent of phase bus and UL listed as suitable for nonlinear loads.

E. Conductor Connectors: Suitable for use with conductor material and sizes.
   1. Material: Hard-drawn copper, 98 percent conductivity.
   2. Lugs: rated for copper only.
   3. Main and Neutral Lugs: Mechanical type.
   4. Ground Lugs and Bus-Configured Terminators: Mechanical type.
   5. Feed-Through Lugs: Mechanical type, suitable for use with conductor material. Locate at opposite end of bus from incoming lugs or main device.
   6. Subfeed (Double) Lugs: Mechanical type suitable for use with conductor material. Locate at same end of bus as incoming lugs or main device.
   7. Extra-Capacity Neutral Lugs: Rated 200 percent of phase lugs mounted on extra-capacity neutral bus.

F. Service Equipment Label: NRTL labeled for use as service equipment for panelboards or load centers with one or more main service disconnecting and overcurrent protective devices.

G. Future Devices: Mounting brackets, bus connections, filler plates, and necessary appurtenances required for future installation of devices.

H. Panelboard Short-Circuit Current Rating: Fully rated to interrupt symmetrical short-circuit current available at terminals.

I. 208 Volt Panels- All 208 volt panels and distribution boards shall include both a bonded and insulated ground bus. The insulated ground bus is intended to provide an isolated ground system for sensitive equipment.

2.02 DISTRIBUTION PANELBOARDS

A. Manufacturers: Subject to compliance with requirements, provide products by one of the following:
   1. Eaton Electrical Inc.; Cutler-Hammer Business Unit.
   2. General Electric Company; GE Consumer & Industrial - Electrical Distribution.
   3. Siemens Energy & Automation, Inc.
   4. Square D; a brand of Schneider Electric.

B. Panelboards: NEMA PB 1, power and feeder distribution type.

C. Doors: Secured with vault-type latch with tumbler lock; keyed alike.
   1. For doors more than 36 inches (914.4 mm) high, provide two latches, keyed alike.

D. Branch Overcurrent Protective Devices for Circuit-Breaker Frame Sizes 125 A and Smaller: Bolt-on circuit breakers.

E. Branch Overcurrent Protective Devices for Circuit-Breaker Frame Sizes Larger Than 125 A: Bolt-on circuit breakers; plug-in circuit breakers where individual positive-locking device requires mechanical release for removal.

F. Branch Overcurrent Protective Devices: Fused switches.

2.03 LIGHTING AND APPLIANCE BRANCH-CIRCUIT PANELBOARDS

A. Manufacturers: Subject to compliance with requirements, provide products by one of the following:
   1. Eaton Electrical Inc.; Cutler-Hammer Business Unit.
   2. General Electric Company; GE Consumer & Industrial - Electrical Distribution.
   3. Siemens Energy & Automation, Inc.
   4. Square D; a brand of Schneider Electric.

B. Panelboards: NEMA PB 1, lighting and appliance branch-circuit type.

C. Branch Overcurrent Protective Devices: Bolt-on circuit breakers, replaceable without disturbing adjacent units.

D. Doors: Door within door style. Concealed hinges; secured with flush latch with tumbler lock; keyed alike.

E. Covers: Hinged front cover (door-in-door) type.

2.04 DISCONNECTING AND OVERCURRENT PROTECTIVE DEVICES

A. Molded-Case Circuit Breaker (MCCB): Comply with UL 489, with interrupting capacity to meet available fault currents.
   1. Thermal-Magnetic Circuit Breakers: Inverse time-current element for low-level overloads, and instantaneous magnetic trip element for short circuits. Adjustable magnetic trip setting for circuit-breaker frame sizes 250 A and larger.
   2. Adjustable Instantaneous-Trip Circuit Breakers: Magnetic trip element with front-mounted, field-adjustable trip setting.
   3. Electronic trip circuit breakers with rms sensing; field-replaceable rating plug or field-replicable electronic trip; and the following field-adjustable settings:

a. Instantaneous trip.
b. Long- and short-time pickup levels.
c. Long- and short-time time adjustments.
d. Ground-fault pickup level, time delay, and I2t response.

4. GFCI Circuit Breakers: Single- and two-pole configurations with Class A ground-fault protection (6-mA trip).
5. Ground-Fault Equipment Protection (GFEP) Circuit Breakers: Class B ground-fault protection (30-mA trip).
6. Molded-Case Circuit-Breaker (MCCB) Features and Accessories:
   a. Standard frame sizes, trip ratings, and number of poles.
   b. Lugs: Mechanical style, suitable for number, size, trip ratings, and conductor materials.
   c. Application Listing: Appropriate for application; Type SWD for switching fluorescent lighting loads; Type HID for feeding fluorescent and high-intensity discharge (HID) lighting circuits.
   d. Ground-Fault Protection: Integrally mounted relay and trip unit with adjustable pickup and time-delay settings, push-to-test feature, and ground-fault indicator.
   e. Shunt Trip: 120-V trip coil energized from separate circuit, set to trip at 75 percent of rated voltage.
   f. Multipole units enclosed in a single housing or factory assembled to operate as a single unit.
   g. Handle Padlocking Device: Fixed attachment, for locking circuit-breaker handle in on or off position.
   h. Handle Clamp: Loose attachment, for holding circuit-breaker handle in on position.

B. For all circuit breaker overcurrent devices with frames rated 1200A or more, provide adjustable instantaneous time delay and interconnect into the arc energy reduction system.

C. Fused Switch: NEMA KS 1, Type HD; clips to accommodate specified fuses; lockable handle.
   1. Fuses, and Spare-Fuse Cabinet: Comply with requirements specified in Division 26 Section "Fuses."
   2. Fused Switch Features and Accessories: Standard ampere ratings and number of poles.
   3. Auxiliary Contacts: One normally open and normally closed contact(s) that operate with switch handle operation.

2.05 ACCESSORY COMPONENTS AND FEATURES

A. Accessory Set: Include tools and miscellaneous items required for overcurrent protective device test, inspection, maintenance, and operation.

2.06 ARC ENERGY REDUCTION SYSTEM

A. For each overcurrent device with a frame size of 1200A or higher, provide an arc energy reduction system complying with 2014 NEC 240.87.

B. System shall consist of an energy-reducing switch with local status indication. Status shall indicate whether the switch is on or off via illuminated blue LED indication lamp. Status indication shall be clearly and permanently marked.

C. Provide permanent label with instruction for operating the arc energy reduction system and warning that any coordination that has been designed into the system may not exist while the arc energy reduction system in “ON.”

D. When the arc energy reduction switch is turned “ON” (placed in the “ON” position), the system shall bypass the overcurrent protection device delay settings so that the time delay is “OFF” (0 seconds) and illuminate the switch “ON” indication lamp. When the arc energy reduction switch is turned “OFF” (placed in the “OFF” position), the system shall revert back to the standard overcurrent protection device settings and appropriate delay.

E. Provide all required components for a complete and fully functional arc energy reduction system.

PART 3 EXECUTION

3.01 APPLICATION

A. Circuit Breaker Types:
   1. Circuit Breakers 400A and larger: Solid-state, adjustable with LSI adjustments. For 480V circuit breakers 1000A and larger provide LSIG adjustments.
   2. Circuit Breakers less than 400A: Molded case with instantaneous adjustments.

3.02 EXAMINATION

A. Receive, inspect, handle, and store panelboards according to NEMA PB 1.1.

B. Examine panelboards before installation. Reject panelboards that are damaged or rusted or have been subjected to water saturation.

C. Examine elements and surfaces to receive panelboards for compliance with installation tolerances and other conditions affecting performance of the Work.

D. Proceed with installation only after unsatisfactory conditions have been corrected.

3.03 INSTALLATION

A. Install panelboards and accessories according to NEMA PB 1.1.

B. Equipment Mounting: Install floor-mounted panelboards on concrete bases, 4-inch (100-mm) nominal thickness. Comply with requirements for concrete base specified in Division 03 Section "Cast-in-Place Concrete."
   1. Install dowel rods to connect concrete base to concrete floor. Unless otherwise indicated, install dowel rods on 18-inch (450-mm) centers around full perimeter of base.
   2. For panelboards, install epoxy-coated anchor bolts that extend through concrete base and anchor into structural concrete floor.
   3. Place and secure anchorage devices. Use setting drawings, templates, diagrams, instructions, and directions furnished with items to be embedded.
   4. Install anchor bolts to elevations required for proper attachment to panelboards.
   5. Attach panelboard to the vertical finished or structural surface behind the panelboard.

C. Temporary Lifting Provisions: Remove temporary lifting eyes, channels, and brackets and temporary blocking of moving parts from panelboards.

D. Comply with mounting and anchoring requirements specified in Division 26 Section "Vibration and Seismic Controls for Electrical Systems."

E. Mount top of trim 80 inches (2032 mm) above finished floor unless otherwise indicated.

F. Mount panelboard cabinet plumb and rigid without distortion of box. Mount recessed panelboards with fronts uniformly flush with wall finish and mating with back box.

G. Install overcurrent protective devices and controllers not already factory installed.
   1. Set field-adjustable, circuit-breaker trip ranges.

H. Install filler plates in unused spaces.

I. Stub five 1-inch (27-GRC) empty conduits from panelboard into accessible ceiling space or space designated to be ceiling space in the future. Stub five 1-inch (27-GRC) empty conduits into raised floor space or below slab not on grade. Include pull strings in empty conduits.

J. Arrange conductors in gutters into groups and bundle and wrap with wire ties.

K. Comply with NECA 1.

L. Fuse Selection and Installation: Verify connected load(s) and selection of fuse sizes for each disconnect switch prior to selection and installation.

3.04 IDENTIFICATION

A. Identify field-installed conductors, interconnecting wiring, and components; provide warning signs complying with Division 26 Section "Identification for Electrical Systems."

B. Create a directory to indicate installed circuit loads and location in the building; incorporate Owner's final room designations. Obtain approval before installing. Use a computer or typewriter to create directory; handwritten directories are not acceptable.

C. Panelboard Nameplates: Label each panelboard with a nameplate complying with requirements for identification specified in Division 26 Section "Identification for Electrical Systems."

D. Device Nameplates: Label each branch circuit device in distribution panelboards with a nameplate complying with requirements for identification specified in Division 26 Section "Identification for Electrical Systems."

3.05 FIELD QUALITY CONTROL

A. Perform tests and inspections.
   1. Manufacturer's Field Service: Engage a factory-authorized service representative to inspect components, assemblies, and equipment installations, including connections, and to assist in testing.

B. Acceptance Testing Preparation:
   1. Test insulation resistance for each panelboard bus, component, connecting supply, feeder, and control circuit.
   2. Test continuity of each circuit.

C. Tests and Inspections:
   1. Perform each visual and mechanical inspection and electrical test stated in NETA Acceptance Testing Specification. Certify compliance with test parameters.
   2. Correct malfunctioning units on-site, where possible, and retest to demonstrate compliance; otherwise, replace with new units and retest.

D. Panelboards will be considered defective if they do not pass tests and inspections.

E. Prepare test and inspection reports, including a certified report that identifies panelboards included and that describes scanning results. Include notation of deficiencies detected, remedial action taken, and observations after remedial action.

3.06 ADJUSTING

A. Adjust moving parts and operable component to function smoothly, and lubricate as recommended by manufacturer.

B. Set field-adjustable circuit-breaker trip ranges as indicated

END OF SECTION 262416

This page intentionally left blank

SECTION 262713
ELECTRICITY METERING

PART 1 GENERAL

1.01 REFERENCE STANDARDS

A. IEEE C37.90.1 - IEEE Standard for Surge Withstand Capability (SWC) Tests for Relays and Relay Systems Associated with Electric Power Apparatus; 2012, with Errata (2013).

1.02 RELATED DOCUMENTS

A. Drawings and general provisions of the Contract, including General and Supplementary Conditions and Division 01 Specification Sections, apply to this Section.

1.03 SUMMARY

A. Section Includes:
   1. Electricity meters.

B. Meters shall be connected to the Building Automation System (BAS) utilizing modbus protocol for building wide metering in compliance with the Utah State High Performance Building Standard requirements.

1.04 ACTION SUBMITTALS

A. Product Data: For each type of product indicated.

B. Shop Drawings: Dimensioned plans and sections or elevation layouts and wiring diagrams.

1.05 INFORMATIONAL SUBMITTALS

A. Field quality-control reports.

1.06 CLOSEOUT SUBMITTALS

A. Operation and Maintenance Data. In addition to items specified in Section 017823 "Operation and Maintenance Data," include the following:
   1. Application and operating software documentation.
   2. Software licenses.
   3. Software service agreement.
   4. Hard copies of manufacturer's operating specifications, design user's guides for software and hardware, and PDF files on CD-ROM of the hard-copy Submittal.

1.07 QUALITY ASSURANCE

A. Electrical Components, Devices, and Accessories: Listed and labeled as defined in NFPA 70, by a qualified testing agency, and marked for intended location and application.

1.08 SOFTWARE SERVICE AGREEMENT

A. Technical Support: Beginning with Substantial Completion, provide software support for two years.

B. Upgrade Service: Update software to latest version at Project completion. Install and program software upgrades that become available within two years from date of Substantial Completion. Upgrading software shall include operating system. Upgrade shall include new or revised licenses for use of software.
   1. Provide 30 days' notice to Owner to allow scheduling and access to system and to allow Owner to upgrade his computer equipment if necessary.

PART 2 PRODUCTS

2.01 ELECTRICITY METERS

A. Basis-of-Design Product: Subject to compliance with requirements, provide the following or prior approved equal.
   1. Schweitzer Engineering Laboratories (SEL) SEL-734 or SEL-735 Power Quality Meter

B. General Requirements for Electricity Meters:

1. Comply with UL 1244.
2. Meters shall meet or exceed accuracy in compliance with ANSI C12.20.
3. The meter shall support 3-Element Wye, 2.5 Element Wye, 2 Element Delta, 4 wire Delta systems.
4. The meter shall accept universal voltage input.
5. Meter shall be designed for operation with 60 HZ system.
6. The meter's surge withstand shall conform to IEEE C37.90.1.
7. The meter shall be user programmable for voltage range to any PT ratio.
8. The meter shall accept a burden up to 0.36VA per phase, Max at 600V, and 0.014VA at 120 Volts.
9. The meter shall accept a voltage input range of up to 300 Volts Line to Neutral, and up to 520 Volts Line to Line.
10. The meter shall accept a current reading of up to 11 Amps continuous.
11. The meter shall have color-coordinated voltage and current inputs.
12. The meter shall have a phasor diagram that clearly shows wiring status.
13. Enclosure: Type 1 where enclosure is required. Meter shall be installed integral with switchboard or panelboard wherever possible.
14. Identification: Comply with requirements in Section 260553 "Identification for Electrical Systems."
15. Sensors: Current-sensing type, with current output, selected for optimum range and accuracy for meters indicated for this application.
16. Type: solid core or split core with ratio accuracy of at least +/- 1% full scale.

C. General Requirements for main service and main switchboard metering Electricity Meters:
   1. Memory Backup: Unit shall have data-logging capability.
   2. Provide sampling at 400+ samples per cycle on all channels measured readings simultaneously.
   3. Meter shall provide Harmonics %THD (% of total Harmonic Distortion), including current, voltage, and power harmonics to the 63rd order harmonic.

D. General Requirements for sub metering Electricity Meters:
   1. Memory Backup: Unit shall have 32 MB of memory/data-logging capability.
   2. sampling at 16+ samples per cycle on all channels measured readings simultaneously.

E. Kilowatt-hour/Demand Meter: Electronic three-phase meters, measuring electricity use and demand. Demand shall be integrated over a 15-minute interval.
   1. Voltage and Phase Configuration: Meter shall be designed for use on circuits with voltage rating and phase configuration indicated for its application.
   2. Display: LCD with characters not less than 0.25 inch (6.35 mm) high, indicating accumulative kilowatt-hours, current time and date, current demand, and historic peak demand. Retain accumulated kilowatt-hour and historic peak demand in a nonvolatile memory, until reset. The display shall be capable of displaying all three phases simultaneously and have a selection button on the face of the meter to cycle through the measured parameters.

F. CT’s shall be 5 amp secondary and shall be secured with appropriate brackets.

G. Provide neutral CT in all distribution systems where a neutral exists.

H. The meter shall have an accuracy of +/- 0.1% or better for volts and amps, and 0.2% for power and energy functions. The meter shall meet the accuracy requirements of IEC62053-22 (Class 0.2%) and ANSI C12.201(Class 0.2%).
   1. The meter shall provide true RMS measurements of voltage, phase to neutral and phase to phase; current, per phase and neutral.

I. Meter shall be a traceable revenue meter, which shall contain a utility grade test pulse allowing power providers to verify and confirm that the meter is performing to its rated accuracy.

J. The main meter for each distribution voltage (both 480/277 and 208/120) shall include a test switch with inline fusing. Test switch shall be capable of access from the front of the switchboard without exposure to bus and main switchboard interior through a separate door or cover that only exposes the test switch and fusing.
   1. Test block shall be equivalent to Milbank TS10-0111.
   2. Provide inline fuse holder and fuses for between bus taps and meter test block.
   3. Provide solid core CT's wherever possible.

K. Meter shall include 2 independent communications ports on the back and face plate, with advanced features.
   1. One port, through backplate, shall be an RJ45 port, providing 100BaseT Ethernet communication speaking Modbus TCP, and a Web server.
   2. The meter shall provide an optical IrDA port (through faceplate), as the second communication port, which shall allow the unit to be set up and programmed using a remote laptop PC without need for a communication cable.

L. The meter shall provide user configured fixed window or rolling window demand. This shall allow user to set up the particular utility demand profile.
   1. Readings for kW, kVAR, kVA and PF shall be calculated using utility demand features.
   2. All other parameters shall offer max and min capability over the user selectable averaging period.
   3. Voltage shall provide an instantaneous max and min reading displaying the highest surge and lowest sag seen by the meter.

M. The meter shall support power supply of 90 to 265 Volts AC and 100 to 370 Volts DC. Universal AC/DC Supply shall be available.
   1. Meter power supply shall accept burden of 10VA max.
   2. Meter shall provide upgrade rate of 100msec for Watts, Var and VA. All other parameters shall be 1 second.

N. Communication: Meter shall have native MODBUS protocol.
   1. Meter shall provide a minimum of 40 embedded MODBUS Objects consisting of standard voltage, current, and power parameters, including kW and kWH.

O. Communication: Meter shall have native BACNET/IP protocol.
   1. Meter shall provide a minimum of 40 embedded BACnet Objects consisting of standard voltage, current, and power parameters, including kW and kWH. Objects shall be readily identifiable.
   2. The meter shall have an embedded Web interface for configuration and viewing.
      a. The Web interface shall have a Home page with power and energy snapshot information.
      b. The Web interface shall have a page for configuring the BACnet/IP settings, including IP address, Network mask, Default Gateway, and the like.
      c. The Web interface shall allow the user to activate the new configuration and reboot the meter.
      d. The Web interface shall have a feature that lets the user download BACnet Object data as a .csv file that can be viewed in MS Excel© or saved as an MS Excel© file.
      e. The Web interface shall have a webpage that displays the BACnet objects, their readings, and information about the objects.
      f. The Web interface shall have a webpage displaying statistics for the unit, e.g., the number of meter reboots, and the number of BACnet/IP packets sent and received.
      g. The Web interface shall allow the user to discard any changes and return to the saved configuration, or return to the factory default configuration.
      h. The Web interface shall be viewable with any standard Internet browser.
      i. The meter shall be configurable on the Host PC through LAN configuration.
      j. The meter's BACnet/IP shall integrate with any BACnet applications or servers including the BAS BACnet server.

k. The meter shall also have an open socket for Modbus TCP that shall be simultaneously available through the LAN interface.

P. Compatibility with other devices or systems: The electricity meter is intended to be a part of the building wide BAS. As such it is required to be fully compatible with the BAS. This requires that all the variables indicated in the schedule below can be accessed from the BAS.

Q. Schedule of required electrical metering points:

A. PARAMETER (METERING POINT)	B. UNITS
C. ENERGY CONSUMPTION	D. KWH
E. REAL POWER	F. KW
G. REACTIVE POWER	H. KVAR
I. APPARENT POWER	J. KVA
K. POWER FACTOR	L.
M. VOLTAGE, LINE TO LINE	N. VOLTS
O. VOLTAGE, LINE TO NEUTRAL	P. VOLTS
Q. CURRENT	R. AMPS
S. REAL POWER PHASE A	T. KW
U. REAL POWER PHASE B	V. KW
W. REAL POWER PHASE C	X. KW
Y. VOLTAGE PHASE A-B	Z. VOLTS
AA. VOLTAGE PHASE B-C	BB. VOLTS
CC. VOLTAGE PHASE C-A	DD. VOLTS
EE. VOLTAGE A-N	FF. VOLTS
GG. VOLTAGE B-N	HH. VOLTS
II. VOLTAGE C-N	JJ. VOLTS
KK. CURRENT PHASE A	LL. AMPS
MM. CURRENT PHASE B	NN. AMPS
OO. CURRENT PHASE C	PP. AMPS
QQ. PRESENT DEMAND (SUBINTERVAL)	RR. KW
SS. PRESENT DEMAND	TT. KW
UU. PEAK DEMAND	VV. KW
WW. PRESENT REACTIVE POWER (SUBINTERVAL)	XX. KVAR
YY. PRESENT REACTIVE POWER	ZZ. KVAR
AAA. PEAK REACTIVE POWER	BBB. KVAR

PART 3 EXECUTION

3.01 INSTALLATION

A. Comply with all manufacturers equipment installation instructions.

B. Comply with requirements for identification specified in Section 260553 "Identification for Electrical Systems."

C. Where current transformers are used, provide an engraved label with 3/8” minimum high letters indicating CT ratio and multiplier. Attach label to electrical panel or meter enclosure next to meter.

D. Provide a ¾” conduit from the meter to the nearest building telecomm room.

3.02 FIELD QUALITY CONTROL

A. Perform tests and inspections.

B. Provide a current transformer test record for each CT which includes:

1. Ratio
2. Ratio correction factor at 10% and 100% load
3. Serial Number
4. Date of test

C. Tests and Inspections:
1. Verify proper operation and measurement of current transformers and document CT ratios for each electricity meter.
2. Verify proper operation and measurement of BTU meters. Provide calibration certificates to owner after start-up is completed.

METERING WILL BE CONSIDERED DEFECTIVE IF IT DOES NOT PASS TESTS AND INSPECTIONS.

A. Document all settings for all metering devices and include with test and inspection reports.

B. Prepare test and inspection reports.

4.02 TRAINING

A. Provide a minimum of 2 hours of training for the Owners maintenance staff. Coordinate the time of this training with the owner at the time of project close-out.

END OF SECTION 262713

This page intentionally left blank

SECTION 262726
WIRING DEVICES

PART 1 GENERAL

1.01 RELATED DOCUMENTS

A. Drawings and general provisions of the Contract, including General and Supplementary Conditions and Division 01 Specification Sections, apply to this Section.

1.02 SUMMARY

A. This Section includes the following:
   1. Receptacles, receptacles with integral GFCI, and associated device plates.
   2. Twist-locking receptacles.
   3. Snap switches and wall-box dimmers.
   4. Pendant cord-connector devices.
   5. Cord and plug sets.
   6. Floor service outlets, poke-through assemblies, and multioutlet assemblies.

1.03 DEFINITIONS

A. GFCI: Ground-fault circuit interrupter.

B. Pigtail: Short lead used to connect a device to a branch-circuit conductor.

1.04 SUBMITTALS

A. Product Data: For each type of floor service outlet, poke-through assembly, and multi-outlet assembly.

B. Field quality-control test reports.

C. Operation and Maintenance Data: For wiring devices to include in all manufacturers' packing label warnings and instruction manuals that include labeling conditions.

1.05 QUALITY ASSURANCE

A. Source Limitations: Obtain each type of wiring device and associated wall plate through one source from a single manufacturer. Insofar as they are available, obtain all wiring devices and associated wall plates from a single manufacturer and one source.

B. Electrical Components, Devices, and Accessories: Listed and labeled as defined in NFPA 70, Article 100, by a testing agency acceptable to authorities having jurisdiction, and marked for intended use.

C. Comply with NFPA 70.

1.06 COORDINATION

A. Receptacles for Owner-Furnished Equipment: Match plug configurations.
   1. Cord and Plug Sets: Match equipment requirements.

1.07 EXTRA MATERIALS

A. Furnish extra materials described in subparagraphs below that match products installed and that are packaged with protective covering for storage and identified with labels describing contents.
   1. Service/Power Poles: One for every 10, but no fewer than one.
   2. Poke-Through, Fire-Rated Closure Plugs: One for every ten floor service outlets installed, but no fewer than two.

PART 2 PRODUCTS

2.01 MANUFACTURERS

A. Manufacturers' Names: Shortened versions (shown in parentheses) of the following manufacturers' names are used in other Part 2 articles and in the Wiring Device Schedule:
   1. Cooper Wiring Devices; a division of Cooper Industries, Inc. (Cooper).
   2. Hubbell Incorporated; Wiring Device-Kellems (Hubbell).

3. Leviton Mfg. Company Inc. (Leviton).
4. Pass & Seymour/Legrand; Wiring Devices & Accessories (Pass & Seymour).

2.02 STRAIGHT BLADE RECEPTACLES

A. Convenience Receptacles, 125 V, 20 A: Comply with NEMA WD 1, NEMA WD 6 configuration 5-20R, and UL 498.
   1. Products: Subject to compliance with requirements, provide products from the manufacturers listed in the Wiring Device Schedule.

2.03 GFCI RECEPTACLES

A. General Description: Straight blade, non-feed-through type. Comply with NEMA WD 1, NEMA WD 6, UL 498, and UL 943, Class A, and include indicator light that is lighted when device is tripped. UL listed for weather-resistant with "WR" listing marked visibly on face.

B. Duplex GFCI Convenience Receptacles, 125 V, 20 A:
   1. Products: Subject to compliance with requirements, provide products from the manufacturers listed in the Wiring Device Schedule.

2.04 TWIST-LOCKING RECEPTACLES

A. Single Convenience Receptacles, 125 V, 20 A: Comply with NEMA WD 1, NEMA WD 6 configuration L5-20R, and UL 498.
   1. Products: Subject to compliance with requirements, provide one of the following:
      a. Cooper; L520R.
      b. Hubbell; HBL2310.
      c. Leviton; 2310.
      d. Pass & Seymour; L520-R.

B. Isolated-Ground, Single Convenience Receptacles, 125 V, 20 A:
   1. Products: Subject to compliance with requirements, provide one of the following:
      a. Hubbell; IG2310.
      b. Leviton; 2310-IG.
   2. Description: Comply with NEMA WD 1, NEMA WD 6 configuration L5-20R, and UL 498. Equipment grounding contacts shall be connected only to the green grounding screw terminal of the device and with inherent electrical isolation from mounting strap. Isolation shall be integral to receptacle construction and not dependent on removable parts.

2.05 PENDANT CORD-CONNECTOR DEVICES

A. Description: Matching, locking-type plug and receptacle body connector; NEMA WD 6 configurations L5-20P and L5-20R, heavy-duty grade.
   1. Body: Nylon with screw-open cable-gripping jaws and provision for attaching external cable grip.
   2. External Cable Grip: Woven wire-mesh type made of high-strength galvanized-steel wire strand, matched to cable diameter, and with attachment provision designed for corresponding connector.

2.06 CORD AND PLUG SETS

A. Description: Match voltage and current ratings and number of conductors to requirements of equipment being connected.
   1. Cord: Rubber-insulated, stranded-copper conductors, with Type SOW-A jacket; with green-insulated grounding conductor and equipment-rating ampacity plus a minimum of 30 percent.
   2. Plug: Nylon body and integral cable-clamping jaws. Match cord and receptacle type for connection.

2.07 SNAP SWITCHES

A. Comply with NEMA WD 1 and UL 20.

B. Switches, 120/277 V, 20 A:

1. Products: Subject to compliance with requirements, provide products from the manufacturers listed in the Wiring Device Schedule.

C. Pilot Light Switches, 20 A:
   1. Products: Subject to compliance with requirements, provide one of the following:
      a. Cooper; 2221PL for 120 V and 277 V.
      b. Hubbell; HPL1221PL for 120 V and 277 V.
      c. Leviton; 1221-PLR for 120 V, 1221-7PLR for 277 V.
      d. Pass & Seymour; PS20AC1-PLR for 120 V.
   2. Description: Single pole, with neon-lighted handle, illuminated when switch is "ON."

D. Key-Operated Switches, 120/277 V, 20 A:
   1. Products: Subject to compliance with requirements, provide one of the following:
      a. Cooper; 2221L.
      b. Hubbell; HBL1221L.
      c. Leviton; 1221-2L.
      d. Pass & Seymour; PS20AC1-L.
   2. Description: Single pole, with factory-supplied key in lieu of switch handle.

E. Single-Pole, Double-Throw, Momentary Contact, Center-Off Switches, 120/277 V, 20 A; for use with mechanically held lighting contactors.
   1. Products: Subject to compliance with requirements, provide one of the following:
      a. Cooper; 1995.
      b. Hubbell; HBL1557.
      c. Leviton; 1257.
      d. Pass & Seymour; 1251.

F. Key-Operated, Single-Pole, Double-Throw, Momentary Contact, Center-Off Switches, 120/277 V, 20 A; for use with mechanically held lighting contactors, with factory-supplied key in lieu of switch handle.
   1. Products: Subject to compliance with requirements, provide one of the following:
      a. Cooper; 1995L.
      b. Hubbell; HBL1557L.
      c. Leviton; 1257L.
      d. Pass & Seymour; 1251L.

2.08 WALL PLATES

A. Single and combination types to match corresponding wiring devices.
   1. Plate-Securing Screws: Metal with head color to match plate finish.
   2. Material for Finished Spaces: Provide full range of finished metal wall plates as selected by the Architect. satin-finished stainless steel.
   3. Material for Unfinished Spaces: Galvanized steel.
   4. Material for Damp Locations: Cast aluminum with spring-loaded lift cover, and listed and labeled for use in "wet locations."

B. Wet-Location, Weatherproof Cover Plates: NEMA 250, complying with type 3R weather-resistant , die-cast aluminum with lockable cover. Weatherproof while in use type.

2.09 FLOOR SERVICE FITTINGS

A. Type: Modular, flush-type, dual-service units suitable for wiring method used.

B. Compartments: Barrier separates power from voice and data communication cabling.

C. Finish: brushed aluminum metal cover finish. Provide carpet insert where used in carpet installations.

D. Power Receptacle: NEMA WD 6 configuration 5-20R, gray finish, unless otherwise indicated.

E. Voice and Data Communication Outlet: Two modular, keyed, color-coded, RJ-45 Category 5e jacks for UTP cable.

2.10 POKE-THROUGH ASSEMBLIES

A. Manufacturers: Subject to compliance with requirements, provide products by one of the following:
   1. Hubbell Incorporated; Wiring Device-Kellems.
   2. Pass & Seymour/Legrand; Wiring Devices & Accessories.
   3. Square D/ Schneider Electric.
   4. Thomas & Betts Corporation.
   5. Wiremold Company (The).

B. Description: Factory-fabricated and -wired assembly of below-floor junction box with multichanneled, through-floor raceway/firestop unit and detachable matching floor service outlet assembly.
   1. Service Outlet Assembly: Flush type with four simplex receptacles and space for four RJ-45 jacks.
   2. Size: Selected to fit nominal 6-inch cored holes in floor and matched to floor thickness.
   3. Fire Rating: Unit is listed and labeled for fire rating of floor-ceiling assembly.
   4. Closure Plug: Arranged to close unused 6-inch (75-mm) cored openings and reestablish fire rating of floor.
   5. Finish: Brushed aluminum metal cover finish.

2.11 MULTIOUTLET ASSEMBLIES

A. Manufacturers: Subject to compliance with requirements, provide products by one of the following:
   1. Hubbell Incorporated; Wiring Device-Kellems.
   2. Wiremold Company (The).

B. Components of Assemblies: Products from a single manufacturer designed for use as a complete, matching assembly of raceways and receptacles.

C. Raceway Material: Metal, with brushed aluminum metal finish.

D. Wire: No. 10 AWG.

2.12 FINISHES

A. Color: Wiring device catalog numbers in Section Text do not designate device color.
   1. Wiring Devices Connected to Normal Power System: As selected by Architect, unless otherwise indicated or required by NFPA 70 or device listing.
   2. Wiring Devices Connected to Emergency Power System: Red.
   3. Isolated-Ground Receptacles: As specified above, with orange triangle on face.

PART 3 EXECUTION

3.01 INSTALLATION

A. Comply with NECA 1, including the mounting heights listed in that standard, unless otherwise noted.

B. Coordination with Other Trades:
   1. Take steps to insure that devices and their boxes are protected. Do not place wall finish materials over device boxes and do not cut holes for boxes with routers that are guided by riding against outside of the boxes.
   2. Keep outlet boxes free of plaster, drywall joint compound, mortar, cement, concrete, dust, paint, and other material that may contaminate the raceway system, conductors, and cables.
   3. Install device boxes in brick or block walls so that the cover plate does not cross a joint unless the joint is troweled flush with the face of the wall.
   4. Install wiring devices after all wall preparation, including painting, is complete.

C. Conductors:

1. Do not strip insulation from conductors until just before they are spliced or terminated on devices.
2. Strip insulation evenly around the conductor using tools designed for the purpose. Avoid scoring or nicking of solid wire or cutting strands from stranded wire.
3. The length of free conductors at outlets for devices shall meet provisions of NFPA 70, Article 300, without pigtails.
4. Existing Conductors:
   a. Cut back and pigtail, or replace all damaged conductors.
   b. Straighten conductors that remain and remove corrosion and foreign matter.
   c. Pigtailing existing conductors is permitted provided the outlet box is large enough.

D. Device Installation:
1. Replace all devices that have been in temporary use during construction or that show signs that they were installed before building finishing operations were complete.
2. Keep each wiring device in its package or otherwise protected until it is time to connect conductors.
3. Do not remove surface protection, such as plastic film and smudge covers, until the last possible moment.
4. Connect devices to branch circuits using pigtails that are not less than 6 inches (152.4 mm) in length.
5. When there is a choice, use side wiring with binding-head screw terminals. Wrap solid conductor tightly clockwise, 2/3 to 3/4 of the way around terminal screw.
6. Use a torque screwdriver when a torque is recommended or required by the manufacturer.
7. When conductors larger than No. 12 AWG are installed on 15- or 20-A circuits, splice No. 12 AWG pigtails for device connections.
8. Tighten unused terminal screws on the device.
9. When mounting into metal boxes, remove the fiber or plastic washers used to hold device mounting screws in yokes, allowing metal-to-metal contact.

E. Receptacle Orientation:
1. Install ground pin of vertically mounted receptacles down, and on horizontally mounted receptacles to the left.
2. Install hospital-grade receptacles in patient-care areas with the ground pin or neutral blade at the bottom.

F. Device Plates: Do not use oversized or extra-deep plates. Repair wall finishes and remount outlet boxes when standard device plates do not fit flush or do not cover rough wall opening.

G. Dimmers:
1. Install dimmers within terms of their listing.
2. Install unshared neutral conductors on line and load side of dimmers according to manufacturers' device listing conditions in the written instructions.

H. Arrangement of Devices: Unless otherwise indicated, mount flush, with long dimension vertical and with grounding terminal of receptacles on bottom. Group adjacent switches under single, multigang wall plates.

I. Adjust locations of floor service outlets and service poles to suit arrangement of partitions and furnishings.

3.02 IDENTIFICATION

A. Comply with Division 26 Section "Identification for Electrical Systems."
1. Receptacles: Identify panelboard and circuit number from which served. Use hot, stamped or engraved machine printing with black-filled lettering on face of plate, and durable wire markers or tags inside outlet boxes.
2. Emergency Outlets: Outlets installed on emergency power circuits shall be red. Other permanent identification of emergency outlets is acceptable only upon written approval from someone having authority in that jurisdiction.

3.03 FIELD QUALITY CONTROL

A. Perform tests and inspections and prepare test reports.
   1. In healthcare facilities, prepare reports that comply with recommendations in NFPA 99.
   2. Test Instruments: Use instruments that comply with UL 1436.
   3. Test Instrument for Convenience Receptacles: Digital wiring analyzer with digital readout or illuminated LED indicators of measurement.

B. Tests for Convenience Receptacles:
   1. Line Voltage: Acceptable range is 105 to 132 V.
   2. Percent Voltage Drop under 15-A Load: A value of 6 percent or higher is not acceptable.
   3. Ground Impedance: Values of up to 2 ohms are acceptable.
   4. GFCI Trip: Test for tripping values specified in UL 1436 and UL 943.
   5. Using the test plug, verify that the device and its outlet box are securely mounted.
   6. The tests shall be diagnostic, indicating damaged conductors, high resistance at the circuit breaker, poor connections, inadequate fault current path, defective devices, or similar problems. Correct circuit conditions, remove malfunctioning units and replace with new ones, and retest as specified above.

END OF SECTION 262726

SECTION 262726.10
WIRING DEVICE SCHEDULE

WIRING DEVICE SCHEDULE

NOTE TO BIDDERS: COMPLY WITH SECTION 262726 OF THE SPECIFICATIONS. THE CATALOG NUMBERS LISTED BELOW HAVE BEEN CAREFULLY PREPARED WITH THE ASSISTANCE OF THE MANUFACTURER'S REPRESENTATIVES WITH THE OBJECTIVE OF ASSISTING THE BIDDERS IN DETERMINING THE QUALITY AND RATINGS OF THE WIRING DEVICE SPECIFIED; HOWEVER, THE CATALOG NUMBERS MAY NOT BE COMPLETE OR ACCURATE. IN ADDITION, THE COLOR OF THE WIRING DEVICE IS NOT INTENDED TO BE DETERMINED BY THE CATALOG NUMBERS LISTED BELOW, BUT SHALL BE SELECTED BY THE ARCHITECT AS INDICATED IN THE SPECIFICATION. EACH MANUFACTURER PRIOR TO BIDDING SHALL COMPARE CATALOG NUMBERS SHOWN WITH THE DESCRIPTION AND SHALL NOTIFY THE ARCHITECT/ENGINEER OF ANY DISCREPANCIES.

NEMA	DESCRIPTION	CATALOG NUMBERS
NEMA 5-20R	20A, 125V 2 POLE 3 WIRE DUPLEX GROUNDING RECEPTACLES. NYLON OR LEXAN FACES. BACK AND SIDE WIRED. COMPLY WITH FS W-C-596 AND UL 498.	BRYANT 5352 HUBBELL CR5352 LEVITON 5352 P&S 5352
NEMA 5-20R GFCI	20A, 125V 2 POLE 3 WIRE DUPLEX FEED THRU GFCI RECEPTACLES UL-LISTED AND MARKED "WR" WEATHER RESISTANT; WITH INDICATOR LIGHT. NYLON OR LEXAN DECORATOR FACES. BACK AND SIDE WIRED. INTERNAL COMPONENTS SHALL COMPLY WITH FS W-C-596 WHERE APPLICABLE. COMPLY WITH UL 498 AND UL 493.	BRYANT GFR53FT HUBBELL GF5352 LEVITON 6898 P&S 2091 S
NEMA 5-20R ISOLATED GROUND	20A, 125V 2 POLE 3 WIRE ISOLATED GROUND DUPLEX GROUNDING RECEPTACLES. NYLON OR LEXAN FACES. BACK AND SIDE WIRED. COMPLY WITH FS W-C-596 AND UL 498.	BRYANT 5362IG HUBBELL CR5352IG LEVITON 5362 - IG P&S IG6300
NEMA 5-20R WATERPROOF (WEATHERPROOF IN USE) GFCI	20A, 125V 2 POLE 3 WIRE DUPLEX FEED THRU GFCI RECEPTACLES WITH UL-LISTED AND MARKED "WR" WEATHER RESISTANT; INDICATOR LIGHT; COMPLY WITH FS W-C-596 AND UL 498. FULLY GASKETED, METAL	LEVITON M5979-0GY COVER WITH THE FOLLOWING DEVICES: HUBBELL GFTR20 BRYANT GFTR20

	WEATHERPROOF WHILE IN USE ENCLOSURE. PLASTIC COVERS ARE NOT ACCEPTABLE.	
NEMA 5-20R **WEATHERPROOF** **GFCI**	**20A, 125V 2 POLE 3 WIRE DUPLEX FEED THRU GFCI RECEPTACLES WITH UL-LISTED AND MARKED "WR" WEATHER RESISTANT; NYLON OR LEXAN FACES. BACK AND SIDE WIRED. COMPLY WITH FS W-C-596 AND UL 498. CAST ALUMINUM AND UL LISTED FOR WET LOCATIONS.**	**APPLETON U-LINE/CONTENDER ENRC 21201** **WITH THE FOLLOWING DEVICES:** **HUBBELL GFTR20** **BRYANT GFTR20**
NEMA 5-20R **WITH USB**	**20A, 125V 2 POLE 3 WIRE GROUNDING, DEAD-FRONT DUPLEX RECEPTACLE WITH 2 USB PORTS AT 3 AMP, 5 VDC, TYPE A, 2.0.**	**HUBBELL USB20X2**
20A **SINGLE POLE**	**20A SINGLE POLE 125V-277V STANDARD TOGGLE SWITCH LABELED AS COMPLYING UL STANDARD 20 AND WITH FEDERAL SPECIFICATION W-S-896. PROVIDE NYLON OR LEXAN FACE, BACK AND SIDE WIRED. RATED 1 HP 120V.**	**HUBBELL CS1221** **LEVITON 1221** **P & S 521** **BRYANT 4901**
20A **THREE-WAY**	**20A THREE-WAY 125V-277V STANDARD TOGGLE SWITCH LABELED AS COMPLYING UL STANDARD 20 AND WITH FEDERAL SPECIFICATION W-S-896. PROVIDE NYLON OR LEXAN FACE, BACK AND SIDE WIRED. RATED 1 HP 120V.**	**HUBBELL CS1223** **LEVITON 1223** **P & S 523** **BRYANT 4903**
20A **FOUR-WAY**	**20A FOUR-WAY 125V-277V STANDARD TOGGLE SWITCH LABELED AS COMPLYING UL STANDARD 20 AND WITH FEDERAL SPECIFICATION W-S-896. PROVIDE NYLON OR LEXAN FACE, BACK AND SIDE WIRED. RATED 1 HP 120V.**	**HUBBELL CS1224** **LEVITON 1224** **P & S 524** **BRYANT 4904**
20A **DOUBLE POLE**	**20A DOUBLE POLE 125V-277V STANDARD TOGGLE SWITCH LABELED AS COMPLYING UL STANDARD 20 AND WITH FEDERAL SPECIFICATION W-S-**	**HUBBELL CS1222** **LEVITON 1222** **P & S 522**

	896. PROVIDE NYLON OR LEXAN FACE, BACK AND SIDE WIRED. RATED 2 HP 240V. DOUBLE POLE.	**BRYANT 4902**

1.01 REFERENCE STANDARDS

A. FS W-C-596 - Connector, Electrical, Power, General Specification for; 2014h (Validated 2022).

B. UL 493 - Thermoplastic-Insulated Underground Feeder and Branch-Circuit Cables; Current Edition, Including All Revisions.

C. UL 498 - Attachment Plugs and Receptacles; Current Edition, Including All Revisions.

END OF SECTION 262726.10

This page intentionally left blank

SECTION 262813
FUSES

PART 1 GENERAL

1.01 RELATED DOCUMENTS

A. Drawings and general provisions of the Contract, including General and Supplementary Conditions and Division 01 Specification Sections, apply to this Section.

1.02 SUMMARY

A. Section Includes:
   1. Cartridge fuses rated 600-V ac and less for use in control circuits, enclosed switches, panelboards, switchboards, enclosed controllers and motor-control centers.
   2. Spare-fuse cabinets.

1.03 SUBMITTALS

A. Product Data: For each type of product indicated. Include construction details, material, dimensions, descriptions of individual components, and finishes for spare-fuse cabinets. Include the following for each fuse type indicated:
   1. Ambient Temperature Adjustment Information: If ratings of fuses have been adjusted to accommodate ambient temperatures, provide list of fuses with adjusted ratings.
      a. For each fuse having adjusted ratings, include location of fuse, original fuse rating, local ambient temperature, and adjusted fuse rating.
      b. Provide manufacturer's technical data on which ambient temperature adjustment calculations are based.
   2. Dimensions and manufacturer's technical data on features, performance, electrical characteristics, and ratings.
   3. Current-limitation curves for fuses with current-limiting characteristics.
   4. Time-current coordination curves (average melt) and current-limitation curves (instantaneous peak let-through current) for each type and rating of fuse.
   5. Coordination charts and tables and related data.
   6. Fuse sizes for elevator feeders and elevator disconnect switches.

B. Operation and Maintenance Data: For fuses to include in emergency, operation, and maintenance manuals. In addition to items specified in Division 01 Section "Operation and Maintenance Data," include the following:
   1. Ambient temperature adjustment information.
   2. Current-limitation curves for fuses with current-limiting characteristics.
   3. Time-current coordination curves (average melt) and current-limitation curves (instantaneous peak let-through current) for each type and rating of fuse.
   4. Coordination charts and tables and related data.

1.04 QUALITY ASSURANCE

A. Source Limitations: Obtain fuses, for use within a specific product or circuit, from single source from single manufacturer.

B. Electrical Components, Devices, and Accessories: Listed and labeled as defined in NFPA 70, by a qualified testing agency, and marked for intended location and application.

C. Comply with NEMA FU 1 for cartridge fuses.

D. Comply with NFPA 70.

E. Comply with UL 248-11 for plug fuses.

1.05 PROJECT CONDITIONS

A. Where ambient temperature to which fuses are directly exposed is less than 40 deg F (5 deg C) or more than 100 deg F (38 deg C), apply manufacturer's ambient temperature adjustment factors to fuse ratings.

1.06 COORDINATION

A. Coordinate fuse ratings with utilization equipment nameplate limitations of maximum fuse size and with system short-circuit current levels.

1.07 EXTRA MATERIALS

A. Furnish extra materials that match products installed and that are packaged with protective covering for storage and identified with labels describing contents.
   1. Fuses: Equal to 10 percent of quantity installed for each size and type, but no fewer than three of each size and type.

PART 2 PRODUCTS

2.01 MANUFACTURERS

A. Manufacturers: Subject to compliance with requirements, provide products by one of the following:
   1. Cooper Bussmann, Inc.
   2. Edison Fuse, Inc.
   3. Ferraz Shawmut, Inc.
   4. Littelfuse, Inc.

2.02 CARTRIDGE FUSES

A. Characteristics: NEMA FU 1, nonrenewable cartridge fuses with voltage ratings consistent with circuit voltages.

2.03 SPARE-FUSE CABINET

A. Characteristics: Wall-mounted steel unit with full-length, recessed piano-hinged door and key-coded cam lock and pull.
   1. Size: Adequate for storage of spare fuses specified with 15 percent spare capacity minimum.
   2. Finish: Gray, baked enamel.
   3. Identification: "SPARE FUSES" in 1-1/2-inch- (38-mm-) high letters on exterior of door.
   4. Fuse Pullers: For each size of fuse, where applicable and available, from fuse manufacturer.

PART 3 EXECUTION

3.01 EXAMINATION

A. Examine fuses before installation. Reject fuses that are moisture damaged or physically damaged.

B. Examine holders to receive fuses for compliance with installation tolerances and other conditions affecting performance, such as rejection features.

C. Examine utilization equipment nameplates and installation instructions. Install fuses of sizes and with characteristics appropriate for each piece of equipment.

D. Evaluate ambient temperatures to determine if fuse rating adjustment factors must be applied to fuse ratings.

E. Proceed with installation only after unsatisfactory conditions have been corrected.

3.02 FUSE APPLICATIONS

A. Cartridge Fuses:
   1. Feeders: Class J, time delay.
   2. Motor Branch Circuits: Class RK5, time delay.
   3. Other Branch Circuits: Class J, time delay.
   4. Control Circuits: Class CC, time delay.

3.03 INSTALLATION

A. Install fuses in fusible devices. Arrange fuses so rating information is readable without removing fuse.

B. Fuse Selection and Installation: Verify connected load(s) and selection of fuse sizes for each disconnect switch prior to selection and installation.

C. Install spare-fuse cabinet(s). Locate in the vicinity of the building main distribution panel.

3.04 IDENTIFICATION

A. Install labels complying with requirements for identification specified in Division 26 Section "Identification for Electrical Systems" and indicating fuse replacement information on inside door of each fused switch and adjacent to each fuse block, socket, and holder.

END OF SECTION 262813

This page intentionally left blank

SECTION 262816
ENCLOSED SWITCHES AND CIRCUIT BREAKERS

PART 1 GENERAL

1.01 RELATED DOCUMENTS

A. Drawings and general provisions of the Contract, including General and Supplementary Conditions and other Division 01 Specification Sections, apply to this Section.

1.02 SUMMARY

A. Section Includes:
   1. Fusible switches.
   2. Nonfusible switches.
   3. Shunt trip switches.
   4. Molded-case circuit breakers (MCCBs).
   5. Molded-case switches.
   6. Enclosures.
   7. Elevator Power Module Shunt-Trip Fused Disconnects

1.03 DEFINITIONS

A. NC: Normally closed.

B. NO: Normally open.

C. SPDT: Single pole, double throw.

1.04 PERFORMANCE REQUIREMENTS

A. Seismic Performance: Enclosed switches and circuit breakers shall withstand the effects of earthquake motions determined according to ASCE/SEI 7.
   1. The term "withstand" means "the unit will remain in place without separation of any parts from the device when subjected to the seismic forces specified."

1.05 SUBMITTALS

A. Product Data: For each type of enclosed switch, circuit breaker, accessory, and component indicated. Include dimensioned elevations, sections, weights, and manufacturers' technical data on features, performance, electrical characteristics, ratings, accessories, and finishes.
   1. Enclosure types and details for types other than NEMA 250, Type 1.
   2. Current and voltage ratings.
   3. Short-circuit current ratings (interrupting and withstand, as appropriate).
   4. Include evidence of NRTL listing for series rating of installed devices.
   5. Detail features, characteristics, ratings, and factory settings of individual overcurrent protective devices, accessories, and auxiliary components.
   6. Include time-current coordination curves (average melt) for each type and rating of overcurrent protective device; include selectable ranges for each type of overcurrent protective device.

B. Shop Drawings: For enclosed switches and circuit breakers. Include plans, elevations, sections, details, and attachments to other work.
   1. Wiring Diagrams: For power, signal, and control wiring.

C. Seismic Qualification Certificates: For enclosed switches and circuit breakers, accessories, and components, from manufacturer.
   1. Basis for Certification: Indicate whether withstand certification is based on actual test of assembled components or on calculation.
   2. Dimensioned Outline Drawings of Equipment Unit: Identify center of gravity and locate and describe mounting and anchorage provisions.
   3. Detailed description of equipment anchorage devices on which the certification is based and their installation requirements.

D. Field quality-control reports.

1. Test procedures used.
2. Test results that comply with requirements.
3. Results of failed tests and corrective action taken to achieve test results that comply with requirements.

E. Manufacturer's field service report.

F. Operation and Maintenance Data: For enclosed switches and circuit breakers to include in emergency, operation, and maintenance manuals. In addition to items specified in Division 01 Section "Operation and Maintenance Data," include the following:
1. Manufacturer's written instructions for testing and adjusting enclosed switches and circuit breakers.
2. Time-current coordination curves (average melt) for each type and rating of overcurrent protective device; include selectable ranges for each type of overcurrent protective device.

1.06 QUALITY ASSURANCE

A. Source Limitations: Obtain enclosed switches and circuit breakers, overcurrent protective devices, components, and accessories, within same product category, from single source from single manufacturer.

B. Product Selection for Restricted Space: Drawings indicate maximum dimensions for enclosed switches and circuit breakers, including clearances between enclosures, and adjacent surfaces and other items. Comply with indicated maximum dimensions.

C. Electrical Components, Devices, and Accessories: Listed and labeled as defined in NFPA 70, by a qualified testing agency, and marked for intended location and application.

D. Comply with NFPA 70.

1.07 PROJECT CONDITIONS

A. Environmental Limitations: Rate equipment for continuous operation under the following conditions unless otherwise indicated:
1. Ambient Temperature: Not less than minus 22 deg F (minus 30 deg C) and not exceeding 104 deg F (40 deg C).
2. Altitude: Not exceeding 6600 feet (201168 cm).

B. Comply with NFPA 70E.

1.08 COORDINATION

A. Coordinate layout and installation of switches, circuit breakers, and components with equipment served and adjacent surfaces. Maintain required workspace clearances and required clearances for equipment access doors and panels.

1.09 EXTRA MATERIALS

A. Furnish extra materials that match products installed and that are packaged with protective covering for storage and identified with labels describing contents.
1. Fuses: Equal to 10 percent of quantity installed for each size and type, but no fewer than three of each size and type.
2. Fuse Pullers: Two for each size and type.

PART 2 PRODUCTS

2.01 FUSIBLE SWITCHES

A. Manufacturers: Subject to compliance with requirements, provide products by one of the following:
1. Eaton Electrical Inc.; Cutler-Hammer Business Unit.
2. General Electric Company; GE Consumer & Industrial - Electrical Distribution.
3. Siemens Energy & Automation, Inc.
4. Square D; a brand of Schneider Electric.

B. Type HD, Heavy Duty, Single Throw, 1200 A and Smaller: UL 98 and NEMA KS 1, horsepower rated, with clips or bolt pads to accommodate indicated fuses, lockable handle with capability to accept three padlocks, and interlocked with cover in closed position.
   1. All lugs shall be rated copper only.

C. Accessories:
   1. Equipment Ground Kit: Internally mounted and labeled for copper and aluminum ground conductors.
   2. Neutral Kit: Internally mounted; insulated, capable of being grounded and bonded; labeled for copper and aluminum neutral conductors.
   3. Class R Fuse Kit: Provides rejection of other fuse types when Class R fuses are specified.
   4. Auxiliary Contact Kit: One NO/NC (Form "C") auxiliary contact(s), arranged to activate before switch blades open.
   5. Hookstick Handle: Allows use of a hookstick to operate the handle.
   6. Lugs: Mechanical type, suitable for number, size, and conductor material.
   7. Service-Rated Switches: Labeled for use as service equipment.

2.02 NONFUSIBLE SWITCHES

A. Manufacturers: Subject to compliance with requirements, provide products by one of the following:
   1. Eaton Electrical Inc.; Cutler-Hammer Business Unit.
   2. General Electric Company; GE Consumer & Industrial - Electrical Distribution.
   3. Siemens Energy & Automation, Inc.
   4. Square D; a brand of Schneider Electric.

B. Type HD, Heavy Duty, Single Throw, 1200 A and Smaller: UL 98 and NEMA KS 1, horsepower rated, lockable handle with capability to accept three padlocks, and interlocked with cover in closed position.
   1. All lugs shall be rated copper only.

C. Accessories:
   1. Equipment Ground Kit: Internally mounted and labeled for copper and aluminum ground conductors.
   2. Neutral Kit: Internally mounted; insulated, capable of being grounded and bonded; labeled for copper and aluminum neutral conductors.
   3. Auxiliary Contact Kit: One NO/NC (Form "C") auxiliary contact(s), arranged to activate before switch blades open.
   4. Hookstick Handle: Allows use of a hookstick to operate the handle.
   5. Lugs: Mechanical type, suitable for number, size, and conductor material.

2.03 MOLDED-CASE CIRCUIT BREAKERS

A. Manufacturers: Subject to compliance with requirements, provide products by one of the following:
   1. Eaton Electrical Inc.; Cutler-Hammer Business Unit.
   2. General Electric Company; GE Consumer & Industrial - Electrical Distribution.
   3. Siemens Energy & Automation, Inc.
   4. Square D; a brand of Schneider Electric.

B. General Requirements: Comply with UL 489, NEMA AB 1, and NEMA AB 3, with interrupting capacity to comply with available fault currents.

C. Thermal-Magnetic Circuit Breakers: Inverse time-current element for low-level overloads and instantaneous magnetic trip element for short circuits. Adjustable magnetic trip setting for circuit-breaker frame sizes 250 A and larger.

D. Adjustable, Instantaneous-Trip Circuit Breakers: Magnetic trip element with front-mounted, field-adjustable trip setting.

E. Electronic Trip Circuit Breakers: Field-replaceable rating plug, rms sensing, with the following field-adjustable settings:
   1. Instantaneous trip.
   2. Long- and short-time pickup levels.
   3. Long- and short-time time adjustments.
   4. Ground-fault pickup level, time delay, and I2t response.

F. Ground-Fault, Circuit-Interrupter (GFCI) Circuit Breakers: Single- and two-pole configurations with Class A ground-fault protection (6-mA trip).

G. Ground-Fault, Equipment-Protection (GFEP) Circuit Breakers: With Class B ground-fault protection (30-mA trip).

H. Features and Accessories:
   1. Standard frame sizes, trip ratings, and number of poles.
   2. Lugs: Mechanical type, suitable for number, size, trip ratings, and conductor material.
   3. Application Listing: Appropriate for application; Type SWD for switching fluorescent lighting loads; Type HID for feeding fluorescent and high-intensity discharge lighting circuits.
   4. Ground-Fault Protection: Comply with UL 1053; integrally mounted, self-powered type with mechanical ground-fault indicator; relay with adjustable pickup and time-delay settings, push-to-test feature, internal memory, and shunt trip unit; and three-phase, zero-sequence current transformer/sensor.
   5. Shunt Trip: Trip coil energized from separate circuit, with coil-clearing contact.
   6. Auxiliary Contacts: One SPDT switch with "a" and "b" contacts; "a" contacts mimic circuit-breaker contacts, "b" contacts operate in reverse of circuit-breaker contacts.

2.04 MOLDED-CASE SWITCHES

A. Manufacturers: Subject to compliance with requirements, provide products by one of the following:
   1. Eaton Electrical Inc.; Cutler-Hammer Business Unit.
   2. General Electric Company; GE Consumer & Industrial - Electrical Distribution.
   3. Siemens Energy & Automation, Inc.
   4. Square D; a brand of Schneider Electric.

B. General Requirements: MCCB with fixed, high-set instantaneous trip only, and short-circuit withstand rating equal to equivalent breaker frame size interrupting rating.

C. Features and Accessories:
   1. Standard frame sizes and number of poles.
   2. Lugs: Mechanical type, suitable for number, size, trip ratings, and conductor material.
   3. Auxiliary Contacts: One SPDT switch with "a" and "b" contacts; "a" contacts mimic switch contacts, "b" contacts operate in reverse of switch contacts.

2.05 ENCLOSURES

A. Enclosed Switches and Circuit Breakers: NEMA AB 1, NEMA KS 1, NEMA 250, and UL 50, to comply with environmental conditions at installed location.
   1. Indoor, Dry and Clean Locations: NEMA 250, Type 1.
   2. Outdoor Locations: NEMA 250, Type 3R.
   3. Other Wet or Damp, Indoor Locations: NEMA 250, Type 4.
   4. Indoor Locations Subject to Dust, Falling Dirt, and Dripping Noncorrosive Liquids: NEMA 250, Type 12.

2.06 ELEVATOR SHUNT-TRIP FUSIBLE SWITCHES

A. Manufacturers: Subject to compliance with requirements, provide products by one of the following:
   1. Cooper Bussmann, Inc. - Power Module PS

B. Provide shunt-trip fused disconnect switch with all necessary relay(s), control transformer and other options, as shown on drawings and listed below:
   1. Ampere rating of the switch shall be based upon the elevator manufacturer requirements.
   2. Short-circuit current rating of 200,000A.
   3. Interlocks to prevent the opening of the cover when the switch is in the ON position. Interlock shall be defeatable for testing purposes.
   4. Handle lockable in OFF position.
   5. 100VA/120V control power transformer with primary and secondary fuses.
   6. Isolation relay (3PDT, 10amp, 120V). A normally open dry contact shall be provided by the Fire Alarm Safety System to energize the isolation relay and activate the shunt trip solenoid (140VA inrush at 120V). (Note: if 24V DC coil is selected, a separate 24V DC source and contact must be provided by the Fire Alarm Safety System.)
   7. Provide additional options as indicated below:
      a. Key to Test Switch
      b. “On” Pilot Light (Green, Red or White)
      c. Isolated Full Capacity Neutral Lug
      d. 1P NC Mechanical Interlock (required for hydraulic elevators with automatic recall).
      e. Fire Alarm Voltage Monitoring Relay (Comply with ((NFPA 72)))
      f. NEMA 1 Enclosure.

PART 3 EXECUTION

3.01 EXAMINATION

A. Examine elements and surfaces to receive enclosed switches and circuit breakers for compliance with installation tolerances and other conditions affecting performance of the Work.

B. Proceed with installation only after unsatisfactory conditions have been corrected.

3.02 INSTALLATION

A. Install individual wall-mounted switches and circuit breakers with tops at uniform height unless otherwise indicated.

B. Comply with mounting and anchoring requirements specified in Division 26 Section "Vibration and Seismic Controls for Electrical Systems."

C. Temporary Lifting Provisions: Remove temporary lifting eyes, channels, and brackets and temporary blocking of moving parts from enclosures and components.

D. Install fuses in fusible devices. Verify connected load(s) and selection of fuse sizes for each disconnect switch prior to selection and installation.

E. Location: Equipment disconnecting means shall be immediately next to the equipment which it services.

F. Comply with NECA 1.

3.03 IDENTIFICATION

A. Comply with requirements in Division 26 Section "Identification for Electrical Systems."
   1. Identify field-installed conductors, interconnecting wiring, and components; provide warning signs.
   2. Label each enclosure with engraved metal or laminated-plastic nameplate.

3.04 FIELD QUALITY CONTROL

A. Perform tests and inspections.
   1. Manufacturer's Field Service: Engage a factory-authorized service representative to inspect components, assemblies, and equipment installations, including connections, and to assist in testing.

B. Acceptance Testing Preparation:

1. Test insulation resistance for each enclosed switch and circuit breaker, component, connecting supply, feeder, and control circuit.
2. Test continuity of each circuit.

C. Tests and Inspections:
1. Perform each visual and mechanical inspection and electrical test stated in NETA Acceptance Testing Specification. Certify compliance with test parameters.
2. Correct malfunctioning units on-site, where possible, and retest to demonstrate compliance; otherwise, replace with new units and retest.
3. Test and adjust controls, remote monitoring, and safeties. Replace damaged and malfunctioning controls and equipment.

D. Enclosed switches and circuit breakers will be considered defective if they do not pass tests and inspections.

E. Prepare test and inspection reports, including a certified report that identifies enclosed switches and circuit breakers and that describes scanning results. Include notation of deficiencies detected, remedial action taken, and observations after remedial action.

3.05 ADJUSTING

A. Adjust moving parts and operable components to function smoothly, and lubricate as recommended by manufacturer.

B. Set field-adjustable circuit-breaker trip ranges.

END OF SECTION 262816

SECTION 262913
ENCLOSED CONTROLLERS

PART 1 GENERAL

1.01 RELATED DOCUMENTS

A. Drawings and general provisions of the Contract, including General and Supplementary Conditions and Division 01 Specification Sections, apply to this Section.

1.02 SUMMARY

A. Section includes the following enclosed controllers rated 600 V and less:
   1. Full-voltage manual.
   2. Full-voltage magnetic.
   3. Reduced-voltage solid state.
   4. Multispeed.

B. Related Section:
   1. Division 26 Section "Variable-Frequency Motor Controllers" for general-purpose, ac, adjustable-frequency, pulse-width-modulated controllers for use on variable torque loads in ranges up to 200 hp.

1.03 DEFINITIONS

A. CPT: Control power transformer.

B. MCCB: Molded-case circuit breaker.

C. MCP: Motor circuit protector.

D. N.C.: Normally closed.

E. N.O.: Normally open.

F. OCPD: Overcurrent protective device.

G. SCR: Silicon-controlled rectifier.

1.04 PERFORMANCE REQUIREMENTS

A. Seismic Performance: Enclosed controllers shall withstand the effects of earthquake motions determined according to ASCE/SEI 7.
   1. The term "withstand" means "the unit will remain in place without separation of any parts from the device when subjected to the seismic forces specified and the unit will be fully operational after the seismic event."

1.05 SUBMITTALS

A. Product Data: For each type of enclosed controller. Include manufacturer's technical data on features, performance, electrical characteristics, ratings, and enclosure types and finishes.

B. Shop Drawings: For each enclosed controller. Include dimensioned plans, elevations, sections, details, and required clearances and service spaces around controller enclosures.
   1. Show tabulations of the following:
      a. Each installed unit's type and details.
      b. Factory-installed devices.
      c. Nameplate legends.
      d. Short-circuit current rating of integrated unit.
      e. Listed and labeled for integrated short-circuit current (withstand) rating of OCPDs in combination controllers by an NRTL acceptable to authorities having jurisdiction.
      f. Features, characteristics, ratings, and factory settings of individual OCPDs in combination controllers.
   2. Wiring Diagrams: For power, signal, and control wiring.

C. Seismic Qualification Certificates: For enclosed controllers, accessories, and components, from manufacturer.

1. Basis for Certification: Indicate whether withstand certification is based on actual test of assembled components or on calculation.
2. Dimensioned Outline Drawings of Equipment Unit: Identify center of gravity and locate and describe mounting and anchorage provisions.
3. Detailed description of equipment anchorage devices on which the certification is based and their installation requirements.

D. Field quality-control reports.

E. Operation and Maintenance Data: For enclosed controllers to include in emergency, operation, and maintenance manuals. In addition to items specified in Division 01 Section "Operation and Maintenance Data," include the following:
1. Routine maintenance requirements for enclosed controllers and installed components.
2. Manufacturer's written instructions for testing and adjusting circuit breaker and MCP trip settings.
3. Manufacturer's written instructions for setting field-adjustable overload relays.
4. Manufacturer's written instructions for testing, adjusting, and reprogramming reduced-voltage solid-state controllers.

F. Load-Current and List of Settings of Adjustable Overload Relays: Compile after motors have been installed, and arrange to demonstrate that switch settings for motor running overload protection suit actual motors to be protected.

1.06 QUALITY ASSURANCE

A. Electrical Components, Devices, and Accessories: Listed and labeled as defined in NFPA 70, by a qualified testing agency, and marked for intended location and application.

B. Comply with NFPA 70.

C. IEEE Compliance: Fabricate and test enclosed controllers according to IEEE 344 to withstand seismic forces defined in Division 26 Section "Vibration and Seismic Controls for Electrical Systems."

1.07 DELIVERY, STORAGE, AND HANDLING

A. Store enclosed controllers indoors in clean, dry space with uniform temperature to prevent condensation. Protect enclosed controllers from exposure to dirt, fumes, water, corrosive substances, and physical damage.

B. If stored in areas subject to weather, cover enclosed controllers to protect them from weather, dirt, dust, corrosive substances, and physical damage. Remove loose packing and flammable materials from inside controllers; install temporary electric heating, with at least 250 W per controller.

1.08 PROJECT CONDITIONS

A. Environmental Limitations: Rate equipment for continuous operation under the following conditions unless otherwise indicated:
1. Ambient Temperature: Not less than minus 22 deg F (minus 30 deg C) and not exceeding 104 deg F (40 deg C).
2. Altitude: Not exceeding 6600 feet (201168 cm).

B. Comply with NFPA 70E.

1.09 COORDINATION

A. Coordinate layout and installation of enclosed controllers with other construction including conduit, piping, equipment, and adjacent surfaces. Maintain required workspace clearances and required clearances for equipment access doors and panels.

B. Coordinate sizes and locations of concrete bases with actual equipment provided. Cast anchor-bolt inserts into bases. Concrete, reinforcement, and formwork requirements are specified in Division 03.

C. Coordinate installation of roof curbs, equipment supports, and roof penetrations.

PART 2 PRODUCTS

2.01 FULL-VOLTAGE CONTROLLERS

A. General Requirements for Full-Voltage Controllers: Comply with NEMA ICS 2, general purpose, Class A.

B. Motor-Starting Switches: "Quick-make, quick-break" toggle or push-button action; marked to show whether unit is off or on.
   1. Manufacturers: Subject to compliance with requirements, provide products by one of the following:
      a. Eaton Electrical Inc.; Cutler-Hammer Business Unit.
      b. General Electric Company; GE Consumer & Industrial - Electrical Distribution.
      c. Siemens Energy & Automation, Inc.
      d. Square D; a brand of Schneider Electric.
   2. Configuration: Nonreversing.
   3. Flush or surface mounting.
   4. Red pilot light.

C. Fractional Horsepower Manual Controllers: "Quick-make, quick-break" toggle or push-button action; marked to show whether unit is off, on, or tripped.
   1. Manufacturers: Subject to compliance with requirements, provide products by one of the following:
      a. Eaton Electrical Inc.; Cutler-Hammer Business Unit.
      b. General Electric Company; GE Consumer & Industrial - Electrical Distribution.
      c. Siemens Energy & Automation, Inc.
      d. Square D; a brand of Schneider Electric.
   2. Configuration: Nonreversing.
   3. Overload Relays: Inverse-time-current characteristics; NEMA ICS 2, Class 10 tripping characteristics; heaters matched to nameplate full-load current of actual protected motor; external reset push button; bimetallic type.
   4. Surface mounting.
   5. Red pilot light.

D. Magnetic Controllers: Full voltage, across the line, electrically held.
   1. Manufacturers: Subject to compliance with requirements, provide products by one of the following:
      a. Eaton Electrical Inc.; Cutler-Hammer Business Unit.
      b. General Electric Company; GE Consumer & Industrial - Electrical Distribution.
      c. Siemens Energy & Automation, Inc.
      d. Square D; a brand of Schneider Electric.
   2. Configuration: Nonreversing.
   3. Contactor Coils: Pressure-encapsulated type.
      a. Operating Voltage: Depending on contactor NEMA size and line-voltage rating, manufacturer's standard matching control power or line voltage.
   4. Power Contacts: Totally enclosed, double-break, silver-cadmium oxide; assembled to allow inspection and replacement without disturbing line or load wiring.
   5. Control Circuits: 24 or 120-V ac, as required by the control circuit; obtained from integral CPT, with primary and secondary fuses, with CPT of sufficient capacity to operate integral devices and remotely located pilot, indicating, and control devices.
      a. CPT Spare Capacity: 100 VA.
   6. Solid-State Overload Relay:
      a. Switch or dial selectable for motor running overload protection.
      b. Sensors in each phase.
      c. Class 10/20 selectable tripping characteristic selected to protect motor against voltage and current unbalance and single phasing.

d. Class II ground-fault protection, with start and run delays to prevent nuisance trip on starting.
e. Analog communication module.

7. N.C./N.O., isolated overload alarm contact.
8. External overload reset push button.

E. Combination Magnetic Controller: Factory-assembled combination of magnetic controller, OCPD, and disconnecting means.

1. Manufacturers: Subject to compliance with requirements, provide products by one of the following:
   a. Eaton Electrical Inc.; Cutler-Hammer Business Unit.
   b. General Electric Company; GE Consumer & Industrial - Electrical Distribution.
   c. Siemens Energy & Automation, Inc.
   d. Square D; a brand of Schneider Electric.
2. Fusible Disconnecting Means:
   a. NEMA KS 1, heavy-duty, horsepower-rated, fusible switch with clips or bolt pads to accommodate indicated fuses.
   b. Lockable Handle: Accepts three padlocks and interlocks with cover in closed position.
   c. Auxiliary Contacts: N.O./N.C., arranged to activate before switch blades open.
3. Nonfusible Disconnecting Means:
   a. NEMA KS 1, heavy-duty, horsepower-rated, nonfusible switch.
   b. Lockable Handle: Accepts three padlocks and interlocks with cover in closed position.
   c. Auxiliary Contacts: N.O./N.C., arranged to activate before switch blades open.
4. MCP Disconnecting Means:
   a. UL 489, NEMA AB 1, and NEMA AB 3, with interrupting capacity to comply with available fault currents, instantaneous-only circuit breaker with front-mounted, field-adjustable, short-circuit trip coordinated with motor locked-rotor amperes.
   b. Lockable Handle: Accepts three padlocks and interlocks with cover in closed position.
   c. Auxiliary contacts "a" and "b" arranged to activate with MCP handle.
   d. N.C./N.O. alarm contact that operates only when MCP has tripped.
   e. Current-limiting module to increase controller short-circuit current (withstand) rating to 100 kA.
5. MCCB Disconnecting Means:
   a. UL 489, NEMA AB 1, and NEMA AB 3, with interrupting capacity to comply with available fault currents; thermal-magnetic MCCB, with inverse time-current element for low-level overloads and instantaneous magnetic trip element for short circuits.
   b. Front-mounted, adjustable magnetic trip setting for circuit-breaker frame sizes 250 A and larger.
   c. Lockable Handle: Accepts three padlocks and interlocks with cover in closed position.
   d. Auxiliary contacts "a" and "b" arranged to activate with MCCB handle.
   e. N.C./N.O. alarm contact that operates only when MCCB has tripped.

2.02 MULTISPEED MAGNETIC CONTROLLERS

A. General Requirements for Multispeed Magnetic Controllers: Comply with NEMA ICS 2, general purpose, Class A.

B. Multispeed Magnetic Controllers: Two speed, full voltage, across the line, electrically held.

1. Manufacturers: Subject to compliance with requirements, provide products by one of the following:
   a. Eaton Electrical Inc.; Cutler-Hammer Business Unit.
   b. General Electric Company; GE Consumer & Industrial - Electrical Distribution.

c. Siemens Energy & Automation, Inc.
d. Square D; a brand of Schneider Electric.

2. Configuration: Nonreversing; consequent pole or two winding types as required by the motor being controlled.
3. Contactor Coils: Pressure-encapsulated type.
   a. Operating Voltage: Depending on contactor NEMA size and line-voltage rating, manufacturer's standard matching control power or line voltage.
4. Power Contacts: Totally enclosed, double break, silver-cadmium oxide; assembled to allow inspection and replacement without disturbing line or load wiring.
5. Control Circuits: 24 or 120-V ac, as required by the control circuit; obtained from integral CPT, with primary and secondary fuses, with CPT of sufficient capacity to operate integral devices and remotely located pilot, indicating, and control devices.
   a. CPT Spare Capacity: 100 VA.
6. Compelling relays shall ensure that motor will start only at low speed.
7. Accelerating timer relays shall ensure properly timed acceleration through speeds lower than that selected.
8. Decelerating timer relays shall ensure automatically timed deceleration through each speed.
9. Antiplugging timer relays shall ensure a time delay when transferring from FORWARD to REVERSE and back.
10. Solid-State Overload Relay:
    a. Switch or dial selectable for motor running overload protection.
    b. Sensors in each phase.
    c. Class 10/20 selectable tripping characteristic selected to protect motor against voltage and current unbalance and single phasing.
    d. Class II ground-fault protection, with start and run delays to prevent nuisance trip on starting.
11. N.C./N.O., isolated overload alarm contact.
12. External overload reset push button.

2.03 ENCLOSURES

A. Enclosed Controllers: NEMA ICS 6, to comply with environmental conditions at installed location.
   1. Dry and Clean Indoor Locations: Type 1.
   2. Outdoor Locations: Type 3R.
   3. Kitchen and Wash-Down Areas: Type 4X, stainless steel.
   4. Other Wet or Damp Indoor Locations: Type 4.
   5. Indoor Locations Subject to Dust, Falling Dirt, and Dripping Noncorrosive Liquids: Type 12.

2.04 ACCESSORIES

A. General Requirements for Control Circuit and Pilot Devices: NEMA ICS 5; factory installed in controller enclosure cover unless otherwise indicated.
   1. Push Buttons, Pilot Lights, and Selector Switches: Heavy-duty, oiltight type.
      a. Push Buttons: Covered, lockable types; maintained or momentary as indicated.
      b. Pilot Lights: LED types; colors as indicated; push to test.
      c. Selector Switches: Rotary type.

B. N.C./N.O. auxiliary contact(s).

C. Control Relays: Auxiliary and adjustable solid-state time-delay relays.

D. Phase-Failure, Phase-Reversal, and Undervoltage and Overvoltage Relays: Solid-state sensing circuit with isolated output contacts for hard-wired connections. Provide adjustable undervoltage, overvoltage, and time-delay settings.

E. Cover gaskets for Type 1 enclosures.

PART 3 EXECUTION

3.01 EXAMINATION

A. Examine areas and surfaces to receive enclosed controllers, with Installer present, for compliance with requirements and other conditions affecting performance of the Work.

B. Examine enclosed controllers before installation. Reject enclosed controllers that are wet, moisture damaged, or mold damaged.

C. Proceed with installation only after unsatisfactory conditions have been corrected.

3.02 INSTALLATION

A. Wall-Mounted Controllers: Install enclosed controllers on walls with tops at uniform height unless otherwise indicated, and by bolting units to wall or mounting on lightweight structural-steel channels bolted to wall. For controllers not at walls, provide freestanding racks complying with Division 26 Section "Hangers and Supports for Electrical Systems."

B. Floor-Mounted Controllers: Install enclosed controllers on 4-inch (100-mm) nominal-thickness concrete base. Comply with requirements for concrete base specified in Division 03 Section "Cast-in-Place Concrete."
   1. Install dowel rods to connect concrete base to concrete floor. Unless otherwise indicated, install dowel rods on 18-inch (450-mm) centers around the full perimeter of concrete base.
   2. For supported equipment, install epoxy-coated anchor bolts that extend through concrete base and anchor into structural concrete floor.
   3. Place and secure anchorage devices. Use setting drawings, templates, diagrams, instructions, and directions furnished with items to be embedded.
   4. Install anchor bolts to elevations required for proper attachment to supported equipment.

C. Seismic Bracing: Comply with requirements specified in Division 26 Section "Vibration and Seismic Controls for Electrical Systems."

D. Temporary Lifting Provisions: Remove temporary lifting eyes, channels, and brackets and temporary blocking of moving parts from enclosures and components.

E. Install fuses in each fusible-switch enclosed controller.

F. Install fuses in control circuits if not factory installed. Comply with requirements in Division 26 Section "Fuses."

G. Install heaters in thermal overload relays. Select heaters based on actual nameplate full-load amperes after motors have been installed.

H. Install, connect, and fuse thermal-protector monitoring relays furnished with motor-driven equipment.

I. Comply with NECA 1.

3.03 IDENTIFICATION

A. Identify enclosed controllers, components, and control wiring. Comply with requirements for identification specified in Division 26 Section "Identification for Electrical Systems."
   1. Identify field-installed conductors, interconnecting wiring, and components; provide warning signs.
   2. Label each enclosure with engraved nameplate.
   3. Label each enclosure-mounted control and pilot device.

3.04 CONTROL WIRING INSTALLATION

A. Install wiring between enclosed controllers and remote devices and facility's central control system. Comply with requirements in Division 26 Section "Control-Voltage Electrical Power Cables."

B. Bundle, train, and support wiring in enclosures.

C. Connect selector switches and other automatic-control selection devices where applicable.

1. Connect selector switches to bypass only those manual- and automatic-control devices that have no safety functions when switch is in manual-control position.
2. Connect selector switches with enclosed-controller circuit in both manual and automatic positions for safety-type control devices such as low- and high-pressure cutouts, high-temperature cutouts, and motor overload protectors.

3.05 FIELD QUALITY CONTROL

A. Perform tests and inspections.
   1. Manufacturer's Field Service: Engage a factory-authorized service representative to inspect components, assemblies, and equipment installations, including connections, and to assist in testing.

B. Acceptance Testing Preparation:
   1. Test insulation resistance for each enclosed controller, component, connecting supply, feeder, and control circuit.
   2. Test continuity of each circuit.

C. Tests and Inspections:
   1. Inspect controllers, wiring, components, connections, and equipment installation. Test and adjust controllers, components, and equipment.
   2. Test insulation resistance for each enclosed-controller element, component, connecting motor supply, feeder, and control circuits.
   3. Test continuity of each circuit.
   4. Verify that voltages at controller locations are within plus or minus 10 percent of motor nameplate rated voltages. If outside this range for any motor, notify Architect and Owner before starting the motor(s).
   5. Test each motor for proper phase rotation.
   6. Perform each electrical test and visual and mechanical inspection stated in NETA Acceptance Testing Specification. Certify compliance with test parameters.
   7. Correct malfunctioning units on-site, where possible, and retest to demonstrate compliance; otherwise, replace with new units and retest.
   8. Test and adjust controls, remote monitoring, and safeties. Replace damaged and malfunctioning controls and equipment.

D. Enclosed controllers will be considered defective if they do not pass tests and inspections.

E. Prepare test and inspection reports including a certified report that identifies enclosed controllers and that describes scanning results. Include notation of deficiencies detected, remedial action taken, and observations after remedial action.

3.06 ADJUSTING

A. Set field-adjustable switches, auxiliary relays, time-delay relays, timers, and overload-relay pickup and trip ranges.

B. Adjust overload-relay heaters or settings if power factor correction capacitors are connected to the load side of the overload relays.

C. Adjust the trip settings of MCPs and thermal-magnetic circuit breakers with adjustable instantaneous trip elements. Initially adjust to six times the motor nameplate full-load ampere ratings and attempt to start motors several times, allowing for motor cooldown between starts. If tripping occurs on motor inrush, adjust settings in increments until motors start without tripping. Do not exceed eight times the motor full-load amperes (or 11 times for NEMA Premium Efficient motors if required). Where these maximum settings do not allow starting of a motor, notify Architect and Owner before increasing settings.

D. Set field-adjustable switches and program microprocessors for required start and stop sequences in reduced-voltage solid-state controllers.

E. Set field-adjustable circuit-breaker trip ranges.

3.07 PROTECTION

A. Temporary Heating: Apply temporary heat to maintain temperature according to manufacturer's written instructions until enclosed controllers are ready to be energized and placed into service.

B. Replace controllers whose interiors have been exposed to water or other liquids prior to Substantial Completion.

END OF SECTION 262913

SECTION 264113
LIGHTNING PROTECTION FOR STRUCTURES

PART 1 GENERAL

1.01 REFERENCE STANDARDS

A. NFPA 780 - Standard for the Installation of Lightning Protection Systems; 2023.

1.02 RELATED DOCUMENTS

A. Drawings and general provisions of the Contract, including General and Supplementary Conditions and Division 01 Specification Sections, apply to this Section.

1.03 SUMMARY

A. This section includes lightning protection system.

1.04 ACTION SUBMITTALS

A. Product Data: For each type of product.

B. Shop Drawings:
   1. Delegated-Design Submittal: Include a complete delegated design for the lightning protection system complying with NFPA 780 and project design criteria.
   2. Include layouts of the lightning protection system, with details of the components to be used in the installation.
   3. Include raceway locations needed for the installation of conductors.
   4. Details of air terminals, ground rods, ground rings, conductor supports, splices, and terminations, including concealment requirements.
   5. Details of grouding and bonding of building elements such as light poles, structural poles, railings, etc.
   6. Include roof attachment details, coordinated with roof installation.
   7. Calculations required by NFPA 780 for bonding of metal bodies.

1.05 INFORMATIONAL SUBMITTALS

A. Coordination Drawings: Lightning protection system Shop Drawings, drawn to scale, on which the following items are shown and coordinated with each other, using input from installers of the items involved:
   1. Lightning protection cabling attachments to roofing systems, building elements, and accessories.
   2. Lightning protection strike termination device attachment to roofing systems, coordinated with the roofing system manufacturer.
   3. Lightning protection system components penetrating roofing and moisture protection systems and system components, coordinated with the roofing system manufacturer.

B. Qualification Data: For Installer.

C. Product Certificates: For each type of roof adhesive for attaching the roof-mounted air terminal assemblies, approved by the roofing-material manufacturer.

D. Field quality-control reports.

1.06 CLOSEOUT SUBMITTALS

A. Maintenance Data: For lightning protection system to include in maintenance manuals.
   1. In addition to items specified in Section 017823 "Operation and Maintenance Data," include the following:
      a. Dimensioned site plan showing dimensioned route of the ground loop conductor and the ground rod locations. Comply with requirements of Section 017839 "Project Record Documents."
      b. A system testing and inspection record, listing the results of inspections and ground resistance tests, as recommended by NFPA 780, Annex D.

B. Completion Certificate:

1. UL Master Label Certificate.

1.07 QUALITY ASSURANCE

A. Installer Qualifications: LPI Master Installer.

PART 2 PRODUCTS

2.01 MANUFACTURERS

A. Subject to compliance with the requirements, provide products by one of the following:
   1. VFC.
   2. ERICO.
   3. Harger.
   4. Thompson Lightning Protection Inc.
   5. Robbins Lightning, Inc.
   6. Or prior approved equals

2.02 PERFORMANCE REQUIREMENTS

A. NFPA Lightning Protection Standard: Comply with NFPA 780 requirements for Class II buildings.

B. UL Lightning Protection Standard: Comply with UL 96A requirements for Class II buildings.

C. Lightning Protection Components, Devices, and Accessories: Listed and labeled by a qualified testing agency as complying with UL 96, and marked for intended location and application.

2.03 MATERIALS

A. Air Terminals:
   1. Aluminum unless otherwise indicated.
   2. 5/8-inch diameter by 12 and 24 inches (609.6 mm) long as required by design.
   3. Rounded tip.
   4. Stamped adhesive or threaded base support.

B. Air Terminal Bracing:
   1. Aluminum ¼-inch diameter rod.

C. Class II Main Conductors:
   1. Stranded Copper 115,000 circular mils in diameter or Aluminum 211,000 circular mils in diameter

D. Secondary Conductors:
   1. Stranded Copper 26,240 circular mils in diameter or Aluminum 41,400 circular mils in diameter

E. Ground Loop Conductor: Stranded copper.

F. Ground Rods:
   1. Material: Copper-clad steel.
   2. Diameter: 3/4-inch.
   3. Rods shall be not less than 10 feet (304.8 cm) long.

G. Conductor Splices and Connectors: Compression fittings that are installed with hydraulically operated tools, or exothermic welds, approved for use with the class type.

PART 3 EXECUTION

3.01 APPLICATION

A. Regularly Occupied Roof Areas
   1. Shall be defined as the roof area designed and intended for general occupant access such as the running track, basketball courts, and pickle ball courts.
   2. Provide coverage of occupied roof area without the use of air-terminals within the occupied roof area to height of 10’-0” above finished floor.

3. Integrate and utilize building elements such as steel structure, poles, light poles, railings, and similar wherever possible to eliminate or minimize the use of air terminals within the occupied roof area.
4. Conceal conductors from view of the occupied roof area wherever possible.

B. Non Regularly Occupied Roof Areas
1. Shall be defined as areas not accessible to general building occupants such as mechanical roof spaces and roof areas not intended for regular occupancy.
2. The use of standard lightning protection air terminals shall be utilized within these areas.

3.02 INSTALLATION

A. Install lightning protection components and systems according to NFPA 780.

B. Install conductors with direct paths from air terminals to ground connections. Avoid bends less than 90 degrees and 8 inches (203.2 mm) in radius and narrow loops.

C. Conceal conductors within normal view from exterior locations at grade within 200 feet (6096 cm) of building. Comply with requirements for concealed installation in NFPA 780.
1. Roof penetrations required for down conductors and connections to structural-steel framework shall be made using listed through-roof fitting and connector assemblies with solid rods and appropriate roof flashings. Use materials approved by the roofing manufacturer for the purpose. Conform to the methods and materials required at roofing penetrations of the lightning protection components to ensure compatibility with the roofing specifications and warranty.
2. Install conduit where necessary to comply with conductor concealment requirements.
3. Air Terminals on Single-Ply Membrane Roofing: Comply with adhesive manufacturer's written instructions.

D. Ground Ring Electrode: The conductor shall be not less than the main-size lightning conductor.

3.03 CONNECTIONS

A. Aboveground concealed connections, and connections in earth or concrete, shall be done by exothermic welds or by high-compression fittings listed for the purpose.

B. Aboveground exposed connections shall be done using the following types of connectors, listed and labeled for the purpose: exothermic weld or high compression.

C. Bonding Straps and Jumpers: Install in locations accessible for inspection and maintenance, except where routed through short lengths of conduit.
1. Bonding to Structure: Bond straps directly to basic structure, taking care not to penetrate any adjacent parts.
2. Bonding to Equipment Mounted on Vibration Isolation Hangers and Supports: Install bonding so vibration is not transmitted to rigidly mounted equipment.

3.04 CORROSION PROTECTION

A. Do not combine materials that can form an electrolytic couple that will accelerate corrosion in the presence of moisture unless moisture is permanently excluded from junction of such materials.

B. Use conductors with protective coatings where conditions would cause deterioration or corrosion of conductors.

3.05 FIELD QUALITY CONTROL

A. Special Inspections: Engage a qualified special inspector to perform the following special inspections:
1. Perform inspections as required to obtain a UL Master Label for system.
2. Perform inspections to obtain an LPI certification.

B. Prepare test and inspection reports and certificates.

END OF SECTION 264113

This page intentionally left blank

SECTION 264313
SURGE PROTECTION FOR LOW-VOLTAGE ELECTRICAL POWER CIRCUITS

PART 1 GENERAL

1.01 RELATED DOCUMENTS

A. Drawings and general provisions of the Contract, including General and Supplementary Conditions and Division 01 Specification Sections, apply to this Section.

1.02 SUMMARY

A. Section includes field-mounted SPDs for low-voltage (120 to 600 V) power distribution and control equipment.

B. Related Requirements:
   1. Section 262413 "Switchboards" for factory-installed SPDs.
   2. Section 262416 "Panelboards" for factory-installed SPDs.

1.03 DEFINITIONS

A. Inominal: Nominal discharge current.

B. MCOV: Maximum continuous operating voltage.

C. Mode(s), also Modes of Protection: The pair of electrical connections where the VPR applies.

D. MOV: Metal-oxide varistor; an electronic component with a significant non-ohmic current-voltage characteristic.

E. OCPD: Overcurrent protective device.

F. SCCR: Short-circuit current rating.

G. SPD: Surge protective device.

H. VPR: Voltage protection rating.

1.04 ACTION SUBMITTALS

A. Product Data: For each type of product.
   1. Include rated capacities, operating characteristics, electrical characteristics, and furnished specialties and accessories.
   2. Copy of UL Category Code VZCA certification, as a minimum, listing the tested values for VPRs, Inominal ratings, MCOVs, type designations, OCPD requirements, model numbers, system voltages, and modes of protection.

1.05 INFORMATIONAL SUBMITTALS

A. Field quality-control reports.

B. Sample Warranty: For manufacturer's special warranty.

1.06 CLOSEOUT SUBMITTALS

A. Maintenance Data: For SPDs to include in maintenance manuals.

1.07 QUALITY ASSURANCE

A. Electrical Components, Devices, and Accessories: Listed and labeled as defined in NFPA 70, by a testing agency, and marked for intended location and application.

B. Comply with IEEE C62.41.2 and test devices according to IEEE C62.45.

C. Comply with NEMA LS 1.

D. Comply with UL 1283 and UL 1449, 3rd Edition.

E. Comply with NFPA 70.

1.08 WARRANTY

A. Manufacturer's Warranty: Manufacturer agrees to replace or replace SPDs that fail in materials or workmanship within specified warranty period.

1. Warranty Period: Five years from date of Substantial Completion.

PART 2 PRODUCTS

2.01 GENERAL SPD REQUIREMENTS

A. SPD with Accessories: Listed and labeled as defined in NFPA 70, by a qualified testing agency, and marked for intended location and application.

B. Comply with NFPA 70.

C. Comply with UL 1449.

D. MCOV of the SPD shall be the nominal system voltage.

2.02 SERVICE ENTRANCE AND MAIN FEEDER SUPPRESSOR

A. Manufacturers: Subject to compliance with requirements, provide products by one of the following:
   1. Current Technology Inc.; Danaher Power Solutions.
   2. Eaton Corporation.
   3. Emerson Electric Co.
   4. GE Zenith Controls.
   5. LEA International; Protection Technology Group.
   6. Schneider Electric Industries SAS.
   7. Siemens Industry, Inc.

B. SPDs: Comply with UL 1449, Type 1.
   1. SPDs with the following features and accessories:
      a. Integral disconnect switch.
      b. Internal thermal protection that disconnects the SPD before damaging internal suppressor components.
      c. Indicator light display for protection status.
      d. Form-C contacts rated at 5 A and 250-V ac, one normally open and one normally closed, for remote monitoring of protection status.
      e. Surge counter.
   2. Integral to service entrance equipment, factory installed. Device shall be installed in a separate compartment within the equipment that completely isolates the device upon failure to eliminate the spread of smoke within the service entrance equipment.
   3. Separate enclosure for field installation outside of the service entrance equipment.

C. Comply with UL 1283.

D. Peak Surge Current Rating: The minimum single-pulse surge current withstand rating per phase shall not be less than 240kA. The peak surge current rating shall be the arithmetic sum of the ratings of the individual MOVs in a given mode.

E. Protection modes and UL 1449 VPR for grounded wye circuits with 480Y/277 V or 208Y/120 V, three-phase, four-wire circuits shall not exceed the following:
   1. Line to Neutral: 1200 V for 480Y/277 V; 700 V for 208Y/120 V.
   2. Line to Ground: 1200 V for 480Y/277 V; 1200 V for 208Y/120 V.
   3. Line to Line: 2000 V for 480Y/277 V; 1000 V for 208Y/120 V.

F. SCCR: Equal or exceed 100 kA.

G. Inominal Rating: 20 kA.

2.03 PANEL SUPPRESSORS

A. Manufacturers: Subject to compliance with requirements, provide products by one of the following:
   1. Current Technology Inc.; Danaher Power Solutions.
   2. Eaton Corporation.
   3. Emerson Electric Co.

4. GE Zenith Controls.
5. LEA International; Protection Technology Group.
6. Schneider Electric Industries SAS.
7. Siemens Industry, Inc.

B. SPDs: Comply with UL 1449, Type 1.
1. Include LED indicator lights for power and protection status.
2. Internal thermal protection that disconnects the SPD before damaging internal suppressor components.
3. Include Form-C contacts rated at 5 A and 250-V ac, one normally open and one normally closed, for remote monitoring of protection status.
4. Integral to service entrance equipment, factory installed. Device shall be installed in a separate compartment within the equipment that completely isolates the device upon failure to eliminate the spread of smoke within the service entrance equipment.
5. Separate enclosure for field installation outside of the service entrance equipment.

C. Peak Surge Current Rating: The minimum single-pulse surge current withstand rating per phase shall not be less than 100 kA. The peak surge current rating shall be the arithmetic sum of the ratings of the individual MOVs in a given mode.

D. Comply with UL 1283.

E. Protection modes and UL 1449 VPR for grounded wye circuits with 480Y/277 V or 208Y/120 V, three-phase, four-wire circuits shall not exceed the following:
1. Line to Neutral: 1200 V for 480Y/277 V; 700 V for 208Y/120 V.
2. Line to Ground: 1200 V for 480Y/277 V; 1200 V for 208Y/120 V.
3. Line to Line: 2000 V for 480Y/277 V; 1000 V for 208Y/120 V.

F. Protection modes and UL 1449 VPR for 240/120-V, single-phase, three-wire circuits shall not exceed the following:
1. Line to Neutral: 700 V.
2. Line to Ground: 700 V.
3. Neutral to Ground: 700 V.
4. Line to Line: 1200 V.

G. SCCR: Equal or exceed 100 kA.

H. Inominal Rating: 20 kA.

2.04 ENCLOSURES

A. Indoor Enclosures: NEMA 250, Type 1.

B. Outdoor Enclosures: NEMA 250, Type 3R.

2.05 CONDUCTORS AND CABLES

A. Power Wiring: Same size as SPD leads, complying with Section 260519 "Low-Voltage Electrical Power Conductors and Cables."

B. Class 2 Control Cables: Multiconductor cable with copper conductors not smaller than No. 18 AWG, complying with Section 260519 "Low-Voltage Electrical Power Conductors and Cables."

C. Class 1 Control Cables: Multiconductor cable with copper conductors not smaller than No. 14 AWG, complying with Section 260519 "Low-Voltage Electrical Power Conductors and Cables."

PART 3 EXECUTION

3.01 INSTALLATION

A. Comply with NECA 1.

B. Install an OCPD or disconnect as required to comply with the UL listing of the SPD.

C. Install SPDs with conductors between suppressor and points of attachment as short and straight as possible, and adjust circuit-breaker positions to achieve shortest and straightest

leads. Do not splice and extend SPD leads unless specifically permitted by manufacturer. Do not exceed manufacturer's recommended lead length. Do not bond neutral and ground.

D. Use crimped connectors and splices only. Wire nuts are unacceptable.

E. Wiring:
   1. Power Wiring: Comply with wiring methods in Section 260519 "Low-Voltage Electrical Power Conductors and Cables."
   2. Controls: Comply with wiring methods in Section 260519 "Low-Voltage Electrical Power Conductors and Cables."

3.02 FIELD QUALITY CONTROL

A. Perform the following tests and inspections with the assistance of a factory-authorized service representative.
   1. Compare equipment nameplate data for compliance with Drawings and Specifications.
   2. Inspect anchorage, alignment, grounding, and clearances.
   3. Verify that electrical wiring installation complies with manufacturer's written installation requirements.

B. An SPD will be considered defective if it does not pass tests and inspections.

C. Prepare test and inspection reports.

3.03 STARTUP SERVICE

A. Complete startup checks according to manufacturer's written instructions.

B. Do not perform insulation-resistance tests of the distribution wiring equipment with SPDs installed. Disconnect SPDs before conducting insulation-resistance tests, and reconnect them immediately after the testing is over.

C. Energize SPDs after power system has been energized, stabilized, and tested.

3.04 DEMONSTRATION

A. Train Owner's maintenance personnel to operate and maintain SPDs.

END OF SECTION 264313

SECTION 265100
INTERIOR LIGHTING

PART 1 GENERAL

1.01 REFERENCE STANDARDS

A. IES LM-79 - Approved Method: Optical and Electrical Measurements of Solid-State Lighting Products; 2019.

1.02 RELATED DOCUMENTS

A. Drawings and general provisions of the Contract, including General and Supplementary Conditions and Division 01 Specification Sections, apply to this Section.

1.03 SUMMARY

A. Section Includes:
   1. Interior lighting fixtures, lamps, and ballasts.
   2. Emergency lighting units.
   3. Exit signs.
   4. Lighting fixture supports.

B. Related Sections:
   1. Section 260923 "Lighting Control Devices" for automatic control of lighting, including time switches, photoelectric relays, occupancy sensors, and multipole lighting relays and contactors.
   2. Section 260933 "Central Dimming Controls", Section 260936 "Modular Dimming Controls" for architectural dimming systems.
   3. Section 260943.23 "Relay-Based Lighting Controls" for manual or programmable control systems with low-voltage control wiring or data communication circuits.
   4. Section 262726 "Wiring Devices" for manual wall-box dimmers for incandescent lamps.

1.04 DEFINITIONS

A. BF: Ballast factor.

B. CCT: Correlated color temperature.

C. CRI: Color-rendering index.

D. LER: Luminaire efficacy rating.

E. LED: Light-emitting diode.

F. Lumen: Measured output of lamp and luminaire, or both.

G. Luminaire: Complete lighting fixture, including ballast housing if provided.

1.05 ACTION SUBMITTALS

A. Product Data: For each type of lighting fixture, arranged in order of fixture designation. Include data on features, accessories, finishes, and the following:
   1. Physical description of lighting fixture including dimensions.
   2. Emergency lighting units including battery and charger.
   3. Ballast, including BF.
   4. Energy-efficiency data.
   5. Sound Performance Data: For air-handling lighting fixtures. Indicate sound power level and sound transmission class in test reports certified according to standards specified in Section 233713 "Diffusers, Registers, and Grilles."
   6. Life, output (lumens, CCT, and CRI), and energy-efficiency data for lamps.
   7. Photometric data and adjustment factors based on laboratory tests, complying with IESNA Lighting Measurements Testing & Calculation Guides, of each lighting fixture type. The adjustment factors shall be for lamps, ballasts, and accessories identical to those indicated for the lighting fixture as applied in this Project.

a. Testing Agency Certified Data: For indicated fixtures, photometric data shall be certified by a qualified independent testing agency. Photometric data for remaining fixtures shall be certified by manufacturer.
b. Manufacturer Certified Data: Photometric data shall be certified by a manufacturer's laboratory with a current accreditation under the National Voluntary Laboratory Accreditation Program for Energy Efficient Lighting Products.

B. Shop Drawings: For nonstandard or custom lighting fixtures. Include plans, elevations, sections, details, and attachments to other work.
1. Detail equipment assemblies and indicate dimensions, weights, loads, required clearances, method of field assembly, components, and location and size of each field connection.
2. Wiring Diagrams: For power, signal, and control wiring.

C. Samples – When Request By Architet/Engineer: For each lighting fixture indicated in the Interior Lighting Fixture Schedule. Each Sample shall include the following:
1. Lamps and ballasts, installed.
2. Cords and plugs.
3. Pendant support system.

D. Installation instructions.

1.06 INFORMATIONAL SUBMITTALS

A. Coordination Drawings: Reflected ceiling plan(s) and other details, drawn to scale, on which the following items are shown and coordinated with each other, using input from installers of the items involved:
1. Lighting fixtures.
2. Suspended ceiling components.
3. Partitions and millwork that penetrate the ceiling or extends to within 12 inches (304.8 mm) of the plane of the luminaires.
4. Ceiling-mounted projectors.
5. Structural members to which suspension systems for lighting fixtures will be attached.
6. Other items in finished ceiling including the following:
a. Air outlets and inlets.
b. Speakers.
c. Sprinklers.
d. Smoke and fire detectors.
e. Occupancy sensors.
f. Access panels.
7. Perimeter moldings.

B. Qualification Data: For qualified agencies providing photometric data for lighting fixtures.

C. Product Certificates: For each type of ballast for bi-level and dimmer-controlled fixtures, from manufacturer.

D. Field quality-control reports.

E. Warranty: Sample of special warranty.

1.07 CLOSEOUT SUBMITTALS

A. Operation and Maintenance Data: For lighting equipment and fixtures to include in emergency, operation, and maintenance manuals.
1. Provide a list of all lamp types used on Project; use ANSI and manufacturers' codes.

1.08 MAINTENANCE MATERIAL SUBMITTALS

A. Furnish extra materials that match products installed and that are packaged with protective covering for storage and identified with labels describing contents.
1. Lamps/LEDs: 10 for every 100 of each type and rating installed. Furnish at least one of each type.

2. Plastic Diffusers and Lenses: One for every 100 of each type and rating installed. Furnish at least one of each type.
3. Ballasts/Drivers: One for every 100 of each type and rating installed. Furnish at least one of each type.
4. Globes and Guards: One for every 20 of each type and rating installed. Furnish at least one of each type.

1.09 QUALITY ASSURANCE

A. Luminaire Photometric Data Testing Laboratory Qualifications: Provided by an independent agency, with the experience and capability to conduct the testing indicated, that is an NRTL as defined by OSHA in 29 CFR 1910, complying with the IESNA Lighting Measurements Testing & Calculation Guides.

B. Electrical Components, Devices, and Accessories: Listed and labeled as defined in NFPA 70, by a qualified testing agency, and marked for intended location and application.

C. Comply with NFPA 70.

1.10 COORDINATION

A. Coordinate layout and installation of lighting fixtures and suspension system with other construction that penetrates ceilings or is supported by them, including HVAC equipment, fire-suppression system, and partition assemblies.

1.11 WARRANTY

A. Special Warranty for Emergency Lighting Batteries: Manufacturer's standard form in which manufacturer of battery-powered emergency lighting unit agrees to repair or replace components of rechargeable batteries that fail in materials or workmanship within specified warranty period.

B. Warranty Period for LED Lamps and Power Supplies: 5 years from date of Substantial Completion. Full warranty shall apply for first year, and prorated warranty for the remaining nine years.
   1. Warranty Period for Emergency Lighting Unit Batteries: 10 years from date of Substantial Completion. Full warranty shall apply for first year, and prorated warranty for the remaining nine years.
   2. Warranty Period for Self-Powered Exit Sign Batteries: Seven years from date of Substantial Completion. Full warranty shall apply for first year, and prorated warranty for the remaining six years.

PART 2 PRODUCTS

2.01 MANUFACTURERS

A. Seismic Performance: Luminaires shall withstand the effects of earthquake motions determined according to ASCE/SEI 7.

B. Products: Subject to compliance with requirements, provide one of the products indicated on Drawings.

2.02 GENERAL REQUIREMENTS FOR LIGHTING FIXTURES AND COMPONENTS

A. Recessed Fixtures: Comply with NEMA LE 4 for ceiling compatibility for recessed fixtures.

B. Metal Parts: Free of burrs and sharp corners and edges.

C. Sheet Metal Components: Steel unless otherwise indicated. Form and support to prevent warping and sagging.

D. Doors, Frames, and Other Internal Access: Smooth operating, free of light leakage under operating conditions, and designed to permit relamping without use of tools. Designed to prevent doors, frames, lenses, diffusers, and other components from falling accidentally during relamping and when secured in operating position.

E. Diffusers and Globes:

1. Acrylic Lighting Diffusers: 100 percent virgin acrylic plastic. High resistance to yellowing and other changes due to aging, exposure to heat, and UV radiation.
   a. Lens Thickness: At least 0.125 inch (3.18 mm) minimum unless otherwise indicated.
   b. UV stabilized.
2. Glass: Annealed crystal glass unless otherwise indicated.

F. Factory-Applied Labels: Comply with UL 1598. Include recommended lamps and ballasts. Labels shall be located where they will be readily visible to service personnel, but not seen from normal viewing angles when lamps are in place.
   1. Label shall include the following lamp and ballast characteristics:
      a. "USE ONLY" and include specific lamp type.
      b. Lamp diameter code (T-4, T-5, T-8, T-12, etc.), tube configuration (twin, quad, triple, etc.), base type, and nominal wattage for fluorescent and compact fluorescent luminaires.
      c. Lamp type, wattage, bulb type (ED17, BD56, etc.) and coating (clear or coated) for HID luminaires.
      d. Start type (preheat, rapid start, instant start, etc.) for fluorescent and compact fluorescent luminaires.
      e. ANSI ballast type (M98, M57, etc.) for HID luminaires.
      f. CCT and CRI for all luminaires.

2.03 LED LAMPS AND DRIVERS:

A. Minimum CRI Ra- 82 or as specified.

B. Lumen output shall be Luminaire Lumens or Delivered Lumens. Source lumens shall not be used, per IES LM-79 and LM-80.

C. Color Consistency 3 MacAdams Ellipse or better.

D. LED Rated life L70 of 50,000 hours per (IES TM-21). Luminaire shall maintain LED operating temperature to achieve this rating per TM-21.

E. Flicker: No visible or detectable flicker, operating on all dimmed intensities.

F. Dimming drivers shall be compatible with the control method shown on the drawings. All dimmed drivers shall use 0-10vdc control unless specified differently. Minimum level shall be 1% or as scheduled.

G. Inrush current shall be negligible. Maximum allowed is 30mAs.

H. THD shall not exceed 20% at full load.

I. Minimum driver efficiency shall be 86% at 65% rated load.

J. Maximum off-state power consumption 0.5w.

K. Compliant with FCC 47 CFR Part 15 A for Residential applications and B for Commercial applications.

L. LED module shall be replaceable in the field using modules with digitally traceable matching modules.

M. Luminaire shall be NRTL Listed at intended operating temperature.

N. Photometry shall be measured or absolute photometry. Derived or calculated photometry shall not be provided for consideration.

O. Approved Manufacturers- Drivers
   1. General Electric.
   2. Philips.
   3. Osram / Sylvania.
   4. Lutron
   5. EldoLED
   6. Thomas Research

P. Approved Manufacturers- LEDs
   1. General Electric
   2. Philips
   3. Osram
   4. Cree
   5. Xicato
   6. Nichia

Q. Approved Manufacturers for Luminaires shall be as scheduled.

2.04 EXIT SIGNS

A. General Requirements for Exit Signs: Comply with UL 924; for sign colors, visibility, luminance, and lettering size, comply with authorities having jurisdiction.

B. Internally Lighted Signs:
   1. Lamps for AC Operation: LEDs, 50,000 hours minimum rated lamp life.
   2. Self-Powered Exit Signs (Battery Type): Integral automatic charger in a self-contained power pack.
      a. Battery: Sealed, maintenance-free, nickel-cadmium type.
      b. Charger: Fully automatic, solid-state type with sealed transfer relay.
      c. Operation: Relay automatically energizes lamp from battery when circuit voltage drops to 80 percent of nominal voltage or below. When normal voltage is restored, relay disconnects lamps from battery, and battery is automatically recharged and floated on charger.
      d. Test Push Button: Push-to-test type, in unit housing, simulates loss of normal power and demonstrates unit operability.
      e. LED Indicator Light: Indicates normal power on. Normal glow indicates trickle charge; bright glow indicates charging at end of discharge cycle.
      f. Remote Test: Switch in hand-held remote device aimed in direction of tested unit initiates coded infrared signal. Signal reception by factory-installed infrared receiver in tested unit triggers simulation of loss of its normal power supply, providing visual confirmation of either proper or failed emergency response.
      g. Integral Self-Test: Factory-installed electronic device automatically initiates code-required test of unit emergency operation at required intervals. Test failure is annunciated by an integral audible alarm and a flashing red LED.

2.05 LIGHTING FIXTURE SUPPORT COMPONENTS

A. Comply with Section 260529 "Hangers and Supports for Electrical Systems" for channel- and angle-iron supports and nonmetallic channel and angle supports.

B. Single-Stem Hangers: 1/2-inch (13-mm) steel tubing with swivel ball fittings and ceiling canopy. Finish same as fixture.

C. Twin-Stem Hangers: Two, 1/2-inch (13-mm) steel tubes with single canopy designed to mount a single fixture. Finish same as fixture.

D. Wires: ASTM A 641/A 641M, Class 3, soft temper, zinc-coated steel, 12 gage (0.11 inch (2.68 mm)).

E. Wires for Humid Spaces: ASTM A 580/A 580M, Composition 302 or 304, annealed stainless steel, 12 gage (0.11 inch (2.68 mm)).

F. Rod Hangers: 3/16-inch (5-mm) minimum diameter, cadmium-plated, threaded steel rod.

G. Hook Hangers: Integrated assembly matched to fixture and line voltage and equipped with threaded attachment, cord, and locking-type plug.

2.06 MATERIALS

A. Metal Parts:
   1. Free of burrs and sharp corners and edges.

2. Sheet metal components shall be steel unless otherwise indicated.
3. Form and support to prevent warping and sagging.

B. Doors, Frames, and Other Internal Access: Smooth operating, free of light leakage under operating conditions, and designed to permit relamping without use of tools. Designed to prevent doors, frames, lenses, diffusers, and other components from falling accidentally during relamping and when secured in operating position.

C. Diffusers and Globes:
1. Glass: Annealed crystal glass unless otherwise indicated.
2. Acrylic Diffusers: One hundred percent virgin acrylic plastic, with high resistance to yellowing and other changes due to aging, exposure to heat, and UV radiation.
3. Lens Thickness: At least 0.125 inch (3.18 mm) minimum unless otherwise indicated.

D. Factory-Applied Labels: Comply with UL 1598. Include recommended lamps. Locate labels where they will be readily visible to service personnel, but not seen from normal viewing angles when lamps are in place.
1. Label shall include the following lamp characteristics:
a. "USE ONLY" and include specific lamp type.
b. Lamp diameter, shape, size, wattage, and coating.
c. CCT and CRI for all luminaires.

PART 3 EXECUTION

3.01 INSTALLATION

A. Comply with NECA 1.

B. Lighting fixtures:
1. Set level, plumb, and square with ceilings and walls unless otherwise indicated.
2. Install lamps in each luminaire.

C. Temporary Lighting: If it is necessary, and approved by Architect, to use permanent luminaires for temporary lighting, install and energize the minimum number of luminaires necessary. When construction is sufficiently complete, remove the temporary luminaires, disassemble, clean thoroughly, install new lamps, and reinstall.

D. Remote Mounting of Ballasts: Distance between the ballast and fixture shall not exceed that recommended by ballast manufacturer. Verify, with ballast manufacturers, maximum distance between ballast and luminaire.

E. Lay-in Ceiling Lighting Fixtures Supports: Use grid as a support element.
1. Install ceiling support system rods or wires, independent of the ceiling suspension devices, for each fixture. Locate not more than 6 inches (152.4 mm) from lighting fixture corners.
2. Support Clips: Fasten to lighting fixtures and to ceiling grid members at or near each fixture corner with clips that are UL listed for the application.
3. Fixtures of Sizes Less Than Ceiling Grid: Install as indicated on reflected ceiling plans or center in acoustical panel, and support fixtures independently with at least two 3/4-inch (20-mm) metal channels spanning and secured to ceiling tees.
4. Install at least one independent support rod or wire from structure to a tab on lighting fixture. Wire or rod shall have breaking strength of the weight of fixture at a safety factor of 3.

F. Flush-Mounted Luminaire Support:
1. Secured to outlet box.
2. Attached to ceiling structural members at four points equally spaced around circumference of luminaire.
3. Trim ring flush with finished surface.

G. Wall-Mounted Luminaire Support:
1. Attached to a minimum 20 gauge backing plate attached to wall structural members.

2. Do not attach luminaires directly to gypsum board

H. Suspended Lighting Fixture Support:
1. Pendants and Rods: Where longer than 48 inches (1219.2 mm), brace to limit swinging.
2. Stem-Mounted, Single-Unit Fixtures: Suspend with twin-stem hangers.
3. Continuous Rows: Use tubing or stem for wiring at one point and tubing or rod for suspension for each unit length of fixture chassis, including one at each end.
4. Do not use grid as support for pendant luminaires. Connect support wires or rods to building structure.

I. Connect wiring according to Section 260519 "Low-Voltage Electrical Power Conductors and Cables."

3.02 IDENTIFICATION

A. Install labels with panel and circuit numbers on concealed junction and outlet boxes. Comply with requirements for identification specified in Section 260553 "Identification for Electrical Systems."

3.03 FIELD QUALITY CONTROL

A. Test for Emergency Lighting: Interrupt power supply to demonstrate proper operation. Verify transfer from normal power to battery and retransfer to normal.

B. Verify that self-luminous exit signs are installed according to their listing and the requirements in NFPA 101.

C. Prepare a written report of tests, inspections, observations, and verifications indicating and interpreting results. If adjustments are made to lighting system, retest to demonstrate compliance with standards.

3.04 STARTUP SERVICE

A. Burn-in all lamps that require specific aging period to operate properly, prior to occupancy by Owner. Burn-in fluorescent and compact fluorescent lamps intended to be dimmed, for at least 100 hours at full voltage.

END OF SECTION 265100

This page intentionally left blank

SECTION 265619
LED EXTERIOR LIGHTING

PART 1 GENERAL

1.01 REFERENCE STANDARDS

A. IES LM-80 - Approved Method: Measuring Maintenance of Light Output Characteristics of Solid-State Light Sources; 2021.

B. UL 1598 - Luminaires; Current Edition, Including All Revisions.

1.02 RELATED DOCUMENTS

A. Drawings and general provisions of the Contract, including General and Supplementary Conditions and Division 01 Specification Sections, apply to this Section.

1.03 SUMMARY

A. Section Includes:
   1. Luminaire-mounted photoelectric relays.
   2. Luminaire types.
   3. Materials.
   4. Finishes.
   5. Luminaire support components.

B. Related Requirements:
   1. Section 260923 "Distributed Digital Lighting Controls" for automatic control of lighting, including time switches, photoelectric relays, occupancy sensors, and multipole lighting relays and contactors.

1.04 DEFINITIONS

A. CCT: Correlated color temperature.

B. CRI: Color rendering index.

C. Fixture: See "Luminaire."

D. IP: International Protection or Ingress Protection Rating.

E. Lumen: Measured output of lamp and luminaire, or both.

F. Luminaire: Complete lighting unit, including lamp, reflector, and housing.

1.05 ACTION SUBMITTALS

A. Product Data: For each type of luminaire.
   1. Arrange in order of luminaire designation.
   2. Include data on features, accessories, and finishes.
   3. Include physical description and dimensions of luminaire.
   4. Lamps, include life, output (lumens, CCT, and CRI), and energy-efficiency data.
   5. Photometric data and adjustment factors based on laboratory tests, complying with IES LM-80.
      a. Manufacturer's Certified Data: Photometric data certified by manufacturer's laboratory with a current accreditation under the NVLAP for Energy Efficient Lighting Products.
      b. Testing Agency Certified Data: For indicated luminaires, photometric data certified by a qualified independent testing agency. Photometric data for remaining luminaires shall be certified by manufacturer.
   6. Wiring diagrams for power, control, and signal wiring.
   7. Photoelectric relays.
   8. Means of attaching luminaires to supports and indication that the attachment is suitable for components involved.

B. Shop Drawings: For nonstandard or custom luminaires.
   1. Include plans, elevations, sections, and mounting and attachment details.

2. Include details of luminaire assemblies. Indicate dimensions, weights, loads, required clearances, method of field assembly, components, and location and size of each field connection.
3. Include diagrams for power, signal, and control wiring.

C. Sustainable Design Submittals:
1. BUG Ratings: Product Data indicating BUG ratings of all installed exterior luminaires.

D. Samples: For each luminaire and for each color and texture indicated with factory-applied finish.

E. Product Schedule: For luminaires and lamps. Use same designations indicated on Drawings.

F. Delegated-Design Submittal: For luminaire supports.
1. Include design calculations for luminaire supports and seismic restraints.

1.06 INFORMATIONAL SUBMITTALS

A. Coordination Drawings: Plans, drawn to scale, on which the following items are shown and coordinated with each other, using input from installers of the items involved:
1. Luminaires.
2. Structural members to which equipment and luminaires will be attached.
3. Underground utilities and structures.
4. Existing underground utilities and structures.
5. Above-grade utilities and structures.
6. Existing above-grade utilities and structures.
7. Building features.
8. Vertical and horizontal information.

B. Qualification Data: For testing laboratory providing photometric data for luminaires.

C. Seismic Qualification Data: For luminaires, accessories, and components, from manufacturer.
1. Basis for Certification: Indicate whether withstand certification is based on actual test of assembled components or on calculation.
2. Dimensioned Outline Drawings of Equipment Unit: Identify center of gravity and locate and describe mounting and anchorage provisions.
3. Detailed description of equipment anchorage devices on which the certification is based and their installation requirements.

D. Product Certificates: For each type of the following:
1. Luminaire.
2. Photoelectric relay.

E. Product Test Reports: For each luminaire, for tests performed by a qualified testing agency.

F. Source quality-control reports.

G. Sample warranty.

1.07 CLOSEOUT SUBMITTALS

A. Operation and Maintenance Data: For luminaires to include in operation and maintenance manuals.
1. Provide a list of all lamp types used on Project. Use ANSI and manufacturers' codes.
2. Provide a list of all photoelectric relay types used on Project; use manufacturers' codes.

1.08 MAINTENANCE MATERIAL SUBMITTALS

A. Furnish extra materials that match products installed and that are packaged with protective covering for storage and identified with labels describing contents.
1. Lamps: One for every 10 of each type and rating installed. Furnish at least one of each type.
2. Glass, Acrylic, and Plastic Lenses, Covers, and Other Optical Parts: One for every 10 of each type and rating installed. Furnish at least one of each type.

3. Diffusers and Lenses: One for every 10of each type and rating installed. Furnish at least one of each type.

1.09 QUALITY ASSURANCE

A. Luminaire Photometric Data Testing Laboratory Qualifications:
   1. Luminaire manufacturers' laboratory that is accredited under the NVLAP for Energy Efficient Lighting Products.
   2. Provided by an independent agency, with the experience and capability to conduct the testing indicated, that is an NRTL as defined by OSHA in 29 CFR 1910.7, accredited under the NVLAP for Energy Efficient Lighting Products and complying with applicable IES testing standards.

B. Provide luminaires from a single manufacturer for each luminaire type.

C. Each luminaire type shall be binned within a three-step MacAdam Ellipse to ensure color consistency among luminaires.

D. Installer Qualifications: An authorized representative who is trained and approved by manufacturer.

E. Mockups: For exterior luminaires, complete with power and control connections.
   1. Obtain Architect's approval of luminaires in mockups before starting installations.
   2. Maintain mockups during construction in an undisturbed condition as a standard for judging the completed work.
   3. Approval of mockups does not constitute approval of deviations from the Contract Documents contained in mockups unless Architect specifically approves such deviations in writing.
   4. Subject to compliance with requirements, approved mockups may become part of the completed Work if undisturbed at time of Substantial Completion.

1.10 DELIVERY, STORAGE, AND HANDLING

A. Protect finishes of exposed surfaces by applying a strippable, temporary protective covering prior to shipping.

1.11 FIELD CONDITIONS

A. Verify existing and proposed utility structures prior to the start of work associated with luminaire installation.

B. Mark locations of exterior luminaires for approval by Architect prior to the start of luminaire installation.

1.12 WARRANTY

A. Warranty: Manufacturer and Installer agree to repair or replace components of luminaires that fail in materials or workmanship within specified warranty period.
   1. Failures include, but are not limited to, the following:
      a. Structural failures, including luminaire support components.
      b. Faulty operation of luminaires and accessories.
      c. Deterioration of metals, metal finishes, and other materials beyond normal weathering.
   2. Warranty Period: 2 year(s) from date of Substantial Completion.

PART 2 PRODUCTS

2.01 PERFORMANCE REQUIREMENTS

A. Seismic Performance:
   1. Luminaires shall withstand the effects of earthquake motions determined according to ASCE/SEI 7.
   2. Luminaires and lamps shall be labeled vibration and shock resistant.
   3. The term "withstand" means "the luminaire will remain in place without separation of any parts when subjected to the seismic forces specified."

2.02 LUMINAIRE REQUIREMENTS

A. Electrical Components, Devices, and Accessories: Listed and labeled as defined in NFPA 70, by a qualified testing agency, and marked for intended location and application.

B. NRTL Compliance: Luminaires shall be listed and labeled for indicated class and division of hazard by an NRTL.

C. FM Global Compliance: Luminaires for hazardous locations shall be listed and labeled for indicated class and division of hazard by FM Global.

D. UL Compliance: Comply with UL 1598 and listed for wet location.

E. Lamp base complying with ANSI C81.61 or IEC 60061-1.

F. CRI of minimum 70. CCT of 4000 K.

G. L70 lamp life of 50,000 hours.

H. Lamps dimmable from 100 percent to 0 percent of maximum light output.

I. Internal driver.

J. Nominal Operating Voltage: 120 V ac - 277 V ac.

K. In-line Fusing: Separate in-line fuse for each luminaire.

L. Lamp Rating: Lamp marked for outdoor use.

M. Source Limitations:
   1. Obtain luminaires from single source from a single manufacturer.
   2. For luminaires, obtain each color, grade, finish, type, and variety of luminaire from single source with resources to provide products of consistent quality in appearance and physical properties.

2.03 LUMINAIRE TYPES

A. Area and Site:
   1. Mounting: Pole with extruded-aluminum arm,in length.
   2. Housings:
      a. Extruded-aluminum housing and heat sink.
      b. powder-coat finish.

2.04 MATERIALS

A. Metal Parts: Free of burrs and sharp corners and edges.

B. Sheet Metal Components: Corrosion-resistant aluminum. Form and support to prevent warping and sagging.

C. Doors, Frames, and Other Internal Access: Smooth operating, free of light leakage under operating conditions, and designed to permit relamping without use of tools. Designed to prevent doors, frames, lenses, diffusers, and other components from falling accidentally during relamping and when secured in operating position. Doors shall be removable for cleaning or replacing lenses.

D. Diffusers and Globes:
   1. Acrylic Diffusers: 100 percent virgin acrylic plastic, with high resistance to yellowing and other changes due to aging, exposure to heat, and UV radiation.
   2. Glass: Annealed crystal glass unless otherwise indicated.
   3. Lens Thickness: At least 0.125 inch (3.18 mm) minimum unless otherwise indicated.

E. Lens and Refractor Gaskets: Use heat- and aging-resistant resilient gaskets to seal and cushion lenses and refractors in luminaire doors.

F. Reflecting surfaces shall have minimum reflectance as follows unless otherwise indicated:
   1. White Surfaces: 85 percent.
   2. Specular Surfaces: 83 percent.

3. Diffusing Specular Surfaces: 75 percent.

G. Housings:
1. Rigidly formed, weather- and light-tight enclosure that will not warp, sag, or deform in use.
2. Provide filter/breather for enclosed luminaires.

H. Factory-Applied Labels: Comply with UL 1598. Include recommended lamps. Labels shall be located where they will be readily visible to service personnel, but not seen from normal viewing angles when lamps are in place.
1. Label shall include the following lamp characteristics:
a. "USE ONLY" and include specific lamp type.
b. Lamp diameter, shape, size, wattage and coating.
c. CCT and CRI for all luminaires.

2.05 FINISHES

A. Variations in Finishes: Noticeable variations in same piece are unacceptable. Variations in appearance of adjoining components are acceptable if they are within the range of approved Samples and are assembled or installed to minimize contrast.

B. Luminaire Finish: Manufacturer's standard paint applied to factory-assembled and -tested luminaire before shipping. Where indicated, match finish process and color of pole or support materials.

C. Factory-Applied Finish for Aluminum Luminaires: Comply with NAAMM's "Metal Finishes Manual for Architectural and Metal Products" for recommendations for applying and designating finishes.
1. Finish designations prefixed by AA comply with the system established by the Aluminum Association for designating aluminum finishes.
2. Natural Satin Finish: Provide fine, directional, medium satin polish (AA-M32); buff complying with AA-M20 requirements; and seal aluminum surfaces with clear, hard-coat wax.
3. Class I, Clear-Anodic Finish: AA-M32C22A41 (Mechanical Finish: Medium satin; Chemical Finish: Etched, medium matte; Anodic Coating: Architectural Class I, clear coating 0 inch (0.02 mm) or thicker) complying with AAMA 611.
4. Class I, Color-Anodic Finish: AA-M32C22A42/A44 (Mechanical Finish: Medium satin; Chemical Finish: Etched, medium matte; Anodic Coating: Architectural Class I, integrally colored or electrolytically deposited color coating 0 inch (0.02 mm) or thicker), complying with AAMA 611.
a. Color: Standard Color by Architect.

D. Factory-Applied Finish for Steel Luminaires: Comply with NAAMM's "Metal Finishes Manual for Architectural and Metal Products" for recommendations for applying and designating finishes.
1. Surface Preparation: Clean surfaces to comply with SSPC-SP 1, to remove dirt, oil, grease, and other contaminants that could impair paint bond. Grind welds and polish surfaces to a smooth, even finish. Remove mill scale and rust, if present, from uncoated steel, complying with SSPC-SP 5/NACE No. 1 or SSPC-SP 8.
2. Exterior Surfaces: Manufacturer's standard finish consisting of one or more coats of primer and two finish coats of high-gloss, high-build polyurethane enamel.
a. Color:
1) As selected from manufacturer's standard catalog of colors.
2) Match Architect's sample of manufacturer's standard color.
3) As selected by Architect from manufacturer's full range.

2.06 LUMINAIRE SUPPORT COMPONENTS

A. Comply with requirements in Section 260529 "Hangers and Supports for Electrical Systems" for channel and angle iron supports and nonmetallic channel and angle supports.

PART 3 EXECUTION

3.01 EXAMINATION

A. Examine substrates, areas, and conditions, with Installer present, for compliance with requirements for installation tolerances and other conditions affecting performance of the Work.

B. Examine roughing-in for luminaire electrical conduit to verify actual locations of conduit connections before luminaire installation.

C. Examine walls, roofs, and canopy ceilings for suitable conditions where luminaires will be installed.

D. Proceed with installation only after unsatisfactory conditions have been corrected.

3.02 TEMPORARY LIGHTING

A. If approved by the Architect, use selected permanent luminaires for temporary lighting. When construction is substantially complete, clean luminaires used for temporary lighting and install new lamps.

3.03 GENERAL INSTALLATION REQUIREMENTS

A. Comply with NECA 1.

B. Use fastening methods and materials selected to resist seismic forces defined for the application and approved by manufacturer.

C. Install lamps in each luminaire.

D. Fasten luminaire to structural support.

E. Supports:
   1. Sized and rated for luminaire weight.
   2. Able to maintain luminaire position after cleaning and relamping.
   3. Support luminaires without causing deflection of finished surface.
   4. Luminaire-mounting devices shall be capable of supporting a horizontal force of 100 percent of luminaire weight and a vertical force of 400 percent of luminaire weight.

F. Wall-Mounted Luminaire Support:
   1. Attached to structural members in walls.

G. Wiring Method: Install cables in raceways. Conceal raceways and cables.

H. Install luminaires level, plumb, and square with finished grade unless otherwise indicated.

I. Coordinate layout and installation of luminaires with other construction.

J. Comply with requirements in Section 260519 "Low-Voltage Electrical Power Conductors and Cables" and Section 260533 "Raceways and Boxes for Electrical Systems" for wiring connections and wiring methods.

3.04 INSTALLATION OF INDIVIDUAL GROUND-MOUNTED LUMINAIRES

A. Aim as indicated on Drawings.

B. Install on concrete base with top 4 inches (101.6 mm) above finished grade or surface at luminaire location unless noted otherwise. Cast conduit into base, and finish by troweling and rubbing smooth. Concrete materials, installation, and finishing are specified in Section 033000 "Cast-in-Place Concrete."

3.05 CORROSION PREVENTION

A. Aluminum: Do not use in contact with earth or concrete. When in direct contact with a dissimilar metal, protect aluminum by insulating fittings or treatment.

B. Steel Conduits: Comply with Section 260533 "Raceways and Boxes for Electrical Systems." In concrete foundations, wrap conduit with 0.010-inch- (0.254-mm-) thick, pipe-wrapping plastic tape applied with a 50 percent overlap.

3.06 IDENTIFICATION

A. Identify system components, wiring, cabling, and terminals. Comply with requirements for identification specified in Section 260553 "Identification for Electrical Systems."

3.07 FIELD QUALITY CONTROL

A. Inspect each installed luminaire for damage. Replace damaged luminaires and components.

B. Perform the following tests and inspections:
   1. Operational Test: After installing luminaires, switches, and accessories, and after electrical circuitry has been energized, test units to confirm proper operation.
   2. Verify operation of photoelectric controls.

C. Illumination Tests:
   1. Measure light intensities at night. Use photometers with calibration referenced to NIST standards. Comply with the following IES testing guide(s):
      a. IES LM-5.
      b. IES LM-50.
      c. IES LM-52.
      d. IES LM-64.
      e. IES LM-72.
   2. Operational Test: After installing luminaires, switches, and accessories, and after electrical circuitry has been energized, test units to confirm proper operation.

D. Luminaire will be considered defective if it does not pass tests and inspections.

E. Prepare a written report of tests, inspections, observations, and verifications indicating and interpreting results. If adjustments are made to lighting system, retest to demonstrate compliance with standards.

3.08 DEMONSTRATION

A. Train Owner's maintenance personnel to adjust, operate, and maintain luminaires.

3.09 ADJUSTING

A. Occupancy Adjustments: When requested within 12 months of date of Substantial Completion, provide on-site assistance in adjusting the direction of aim of luminaires to suit occupied conditions. Make up to two visits to Project during other-than-normal hours for this purpose. Some of this work may be required during hours of darkness.
   1. During adjustment visits, inspect all luminaires. Replace lamps or luminaires that are defective.
   2. Parts and supplies shall be manufacturer's authorized replacement parts and supplies.
   3. Adjust the aim of luminaires in the presence of the Architect.

END OF SECTION 265619

This page intentionally left blank

SECTION 271100
TELECOMMUNICATIONS PATHWAYS AND SPACES

PART 1 GENERAL

1.01 REFERENCE STANDARDS

A. NFPA 70 - National Electrical Code; Most Recent Edition Adopted by Authority Having Jurisdiction, Including All Applicable Amendments and Supplements.

1.02 RELATED DOCUMENTS

A. Drawings and general provisions of the Contract, including General and Supplementary Conditions and Division 01 Specification Sections, apply to this Section.

1.03 SUMMARY

A. Section Includes:
   1. Telecommunications vertical and horizontal pathways.
   2. Backboards and mounting elements.
   3. Telecommunications equipment racks and cabinets.
   4. Telecommunications service entrance pathways.
   5. Grounding.

B. Related Sections:
   1. Division 271300 Section "Communications Backbone Cabling" for voice and data cabling associated with system panels and devices.
   2. Division 271500 Section "Communications Horizontal Cabling" for voice and data cabling associated with system panels and devices.

1.04 DEFINITIONS

A. Basket Cable Tray: A fabricated structure consisting of wire mesh bottom and side rails.

B. BICSI: Building Industry Consulting Service International.

C. EIA: Electronic Industries Alliance.

D. TIA: Telecommunications Industry Association

E. ANSI: American National Standard Institute

F. RCDD: Registered Communications Distribution Designer.

1.05 REFERENCES

A. ANSI/TIA-568-D Telecommunications Pathways and Spaces, 2015

B. ANSI/TIA-568-D.0 Generic Telecommunications Cabling for Customer Premises, 2015

C. ANSI/TIA – 568-D.1 Commercial Building Telecommunications Cabling Standard, 2015.

D. ANSI/NECA/BICSI 568-2006 – Standard for Installing Commercial Building Telecommunication Cabling

E. ANSI/TIA-942-A Telecommunications Infrastructure Standard for Data Centers, 2014.

F. ANSI/TIA – 606-B Administration Standard for Telecommunications Infrastructure, 2012.

G. ANSI/TIA – 607-C Generic Telecommunications Bonding and Grounding (Earthing) for Customer Premises, 2015.

H. NFPA 70 – National Electric Code, 2008, 2014.

1.06 PERFORMANCE REQUIREMENTS

A. Seismic Performance: Floor-mounted cabinets and cable pathways shall withstand the effects of earthquake motions determined according to SEI/ASCE 7, (Zone 4).
   1. The term "withstand" means "the unit will remain in place without separation of any parts from the device when subjected to the seismic forces specified and the unit will be fully operational after the seismic event.

1.07 SUBMITTALS

A. Product Data: For each type of product indicated. Include construction details, material descriptions, dimensions of individual components and profiles, and finishes for equipment racks and cabinets. Include rated capacities, operating characteristics, electrical characteristics, and furnished specialties and accessories.

B. Shop Drawings: For communications equipment room fittings. Include plans, elevations, sections, details, and attachments to other work.
   1. Detail equipment assemblies and indicate dimensions, weights, loads, required clearances, method of field assembly, components, and location and size of each field connection.
   2. Equipment Racks and Cabinets: Include workspace requirements and access for cable connections.
   3. Grounding: Indicate location of grounding bus bar and its mounting detail showing standoff insulators and wall mounting brackets.

C. Qualification Data: For each qualified layout technician, installation supervisor, and field inspector.

D. Seismic Qualification Certificates: For floor-mounted cabinets, accessories, and components, from manufacturer.
   1. Basis for Certification: Indicate whether withstand certification is based on actual test of assembled components or on calculation.
   2. Dimensioned Outline Drawings of Equipment Unit: Identify center of gravity and locate and describe mounting and anchorage provisions. Base certification on the maximum number of components capable of being mounted in each rack type. Identify components on which certification is based.
   3. Detailed description of equipment anchorage devices on which the certification is based and their installation requirements.

1.08 QUALITY ASSURANCE

A. Qualified Contractors:

B. Contractor shall provide upon completion a system warranty from the manufacturer to guarantee installation of end-to-end high performance cabling systems that meet all application requirements associated with the Category of cabling installed. The system warranty shall include all copper cable and connectivity components. The system warranty shall be for a period of at least 20 years.

C. Installer Qualifications: Cabling Installer must have personnel certified by BICSI on staff.
   1. Layout Responsibility: Preparation of Shop Drawings shall be under the direct supervision of an RCDD.
   2. Installation Supervision: Installation shall be under the direct supervision of a Registered Technician (BICSI), who shall be present at all times when Work of this Section is performed at Project site.
   3. Field Inspector: Currently registered by BICSI as an RCDD to perform the on-site inspection.
   4. Contractor must be a Commscope Certified Installer.

D. Electrical Components, Devices, and Accessories: Listed and labeled as defined in NFPA 70, by a qualified testing agency, and marked for intended location and application.

E. Telecommunications Pathways and Spaces: Comply with ANSI/TIA/EIA-569-B.

F. Grounding: Comply with ANSI-J-STD-607-A.

1.09 PROJECT CONDITIONS

A. Environmental Limitations: Do not deliver or install equipment frames and cable trays until spaces are enclosed and weathertight, wet work in spaces is complete and dry, and associated construction work on the subfloor and raised floor supports is substantially complete.

PART 2 PRODUCTS

2.01 PATHWAYS

A. General Requirements: Comply with ANSI/TIA/EIA-569-B.

B. Cable Support (J-Hook): Cable installation that does not require basket cable tray management, but shall require support of cables with J-Hooks. J-Hook pathway support will be spaced no more than 60” between supports.
   1. Manufacturers: Subject to compliance with requirements, provide products by one of the following:
      a. Erico Caddy
      b. B-Line
      c. CTS
      d. Stiffy
      e. Panduit
   2. Cable Support Materials (J-Hook) shall meet or exceed the below characteristics of construction and features.
      a. Provide broad based support for cabling to aid in maintaining overall system performance.
      b. Be available in 50.8mm (2”) and 101.6mm (4”) options
      c. Come equipped with a cable retention clip
      d. Offers a full line of mounting accessories.

C. Cable Trays:
   1. Manufacturers: Subject to compliance with requirements, provide products by one of the following:
      a. Cablofil Inc.
      b. Cooper B-Line, Inc.
      c. WBT Wire Basket Tray
      d. .
   2. Cable Tray Materials: Metal, suitable for indoors and protected against corrosion by electroplated zinc galvanizing, complying with ASTM B 633, Type 1, not less than 0.000472 inch (0.01 mm) thick.
      a. Basket Cable Trays: Provide tray widths as noted – 4 – 18 inches (457.2 mm) - wide and minimum 2 inch (50.8 mm) deep. Wire mesh spacing shall not exceed 2 by 4 inches (101.6 mm).

D. Ladder Rack:
   1. 1. Manufacturers: Subject to compliance with requirements, provide products by one of the following:
      a. Chatsworth
      b. Approved Equal
   2. Description:
      a. Size: 1.5 inches (38.1 mm) high by 0.4 inches (10.16 mm) wide high tubular steel with 0.065 inch (1.65 mm) wall thickness.
      b. Stringers: 9 feet (274.32 cm) 11-1/2 inches (292 mm) long.
      c. Cross Members: Welded in between stringers on 12 inch (304.8 mm) intervals/centers beginning 5-3/4 inches (146 mm) with 10 cross members per ladder rack. Open space of 10-1/2 inches (267 mm) between each cross member.
      d. Finish and Color: Powder coat paint in black.

E. Conduit and Boxes: Comply with requirements in Division 26 Section "Raceway and Boxes for Electrical Systems".

F. Conduit Sleeves: Comply with requirements in Division 26 Section "Raceway and Boxes for Electrical Systems".

G. Conduit and Boxes (Wireless Access Points): Comply with requirements in Division 26 Section "Raceway and Boxes for Electrical Systems". Provide a 1” conduit and two gang box, coordinated with the finished height of a hard lid ceiling for outlet mounting, and extend the conduit to the nearest cable tray.

2.02 BACKBOARDS

A. Backboards: Provide plywood, fire-retardant treated, 3/4 by 48 by 96 inches (2438.4 mm), on at least two of the full non-door walls of each telecommunications room, or as noted. Comply with requirements for plywood backing panels specified in Division 06 Section "Rough Carpentry."

2.03 EQUIPMENT FRAMES

A. Manufacturers: Subject to compliance with requirements, provide products by one of the following:
   1. Chatsworth
   2. Approved Equal

B. General Frame Requirements:
   1. Capacity: 1,500 lb
   2. Mounting Channels: 3 inches (76.2 mm) deep and punched on the front and rear flange with the EIA-310-D Universal hole pattern.
   3. UL and cUL Listed as a Communications Circuit Accessory, DUXR and DUXR7 category, file number 140851.
   4. Size: 7 feet (213.36 cm) high by 20.3 inches (515.62 mm) wide by 15 inches (381 mm) deep, 45U by 19 inch (482.6 mm) EIA in black.

2.04 FLOOR MOUNT CABINET

A. Manufacturers: Subject to compliance with requirements, provide products by one of the following:
   1. Panduit
   2. Chatsworth
   3. APC
   4. Equal

B. General Frame Requirements:
   1. Distribution Frames: Floor mounted, modular-metal units designed for telecommunications terminal support and coordinated with dimensions of units to be supported.
   2. Module Dimension: Width compatible with EIA 310 standard, 19-inch panel mounting.
   3. Finish: Manufacturer's standard, baked-polyester powder coat. Black
   4. 24” W x 84” H x 48” D, 45RU

2.05 CABLE MANAGEMENT

A. Manufacturers: Subject to compliance with requirements, provide products by one of the following:
   1. Panduit

B. Cable Management for Equipment Frames:
   1. Shall consist of a metal backbone, with cable fingers that align with EIA rack spacing.
   2. Baked-polyester powder coat finish.
   3. Fingers will be molded plastic, and shall provide integral bend radius control.
   4. Vertical cable management panels shall have front channels, with covers.
   5. Vertical cable management panels will be 10” wide to handle Category 6A cable.
   6. Horizontal cable management panels shall have front channels with covers, and shall be a minimum height of two rack units each.
   7. Horizontal cable management panels will be high capacity, and capable of managing Category 6A patch cords.

2.06 GROUNDING

A. Comply with requirements in Division 26 Section "Grounding and Bonding for Electrical Systems." for grounding conductors and connectors.

B. Telecommunications Main Ground Bus Bar:
   1. Connectors: Mechanical type, cast silicon bronze, solderless exothermic-type wire terminals, and long-barrel, two-bolt connection to ground bus bar.
   2. Ground Bus Bar: Copper, minimum 1/4 inch (6.35 mm) thick by 4 inches (101.6 mm) wide with 9/32-inch holes spaced 1-1/8 inches (29 mm) apart.
   3. Stand-Off Insulators: Comply with UL 891 for use in switchboards, 600 V. Lexan or PVC, impulse tested at 5000 V.

C. Comply with ANSI-J-STD-607-A.

2.07 LABELING

A. Comply with TIA/EIA-606-A and UL 969 for a system of labeling materials, including label stocks, laminating adhesives, and inks used by label printers.

B. Contractor shall coordinate final labeling scheme with owner for final approval.

PART 3 EXECUTION

3.01 ENTRANCE FACILITIES

A. Install underground pathways complying with recommendations in TIA/EIA-569-B, "Entrance Facilities" Article.

3.02 INSTALLATION

A. Install underground entrance pathway complying with Division 26 Section "Raceway and Boxes for Electrical Systems." Comply with NECA 1.

B. Comply with BICSI TDMM for layout and installation of communications equipment rooms.

C. Cable Trays: Provide overhead cable runway (basket tray) as noted. Comply with NEMA VE 2 and TIA/EIA-569-B.
   1. Cable tray should be installed per manufacturer’s specfications.
   2. Distance between supports shall not be more than 8 feet (243.84 cm).
   3. Cable tray must be supported by a trapeze support. Cable tray cannot be center hung.
   4. Provide seismic support as required by the manufacturer.
   5. Cable tray cannot exceed a maximum of 40% fill ratio, and cable must not exceed 75% of the total depth of the cable tray. If cable utilizes more than 75% of the total depth the cable tray must be upsized appropriately.

D. Bundle, wrap, and train conductors and cables to terminal points without exceeding manufacturer's limitations on bending radii. Install management bars and distribution spools.

3.03 FIRESTOPPING

A. Comply with requirements in Division 07 Section "Penetration Firestopping." Comply with TIA/EIA-569-B, "Firestopping."

B. Comply with BICSI TDMM, "Firestopping Systems" Article.

3.04 GROUNDING

A. Install grounding according to BICSI TDMM, "Grounding, Bonding, and Electrical Protection" Chapter.

B. Comply with ANSI-J-STD-607-A.

C. Locate grounding bus bar to minimize the length of bonding conductors. Fasten to wall allowing at least 2-inch (50-mm) clearance behind the grounding bus bar. Connect grounding bus bar with a minimum No. 4 AWG grounding conductor from grounding bus bar to suitable electrical building ground.

D. Bond metallic equipment to the grounding bus bar, using not smaller than No. 6 AWG equipment grounding conductor.
   1. Bond the shield of shielded cable to the grounding bus bar in communications rooms and spaces.
   2. Bond all racks, ladder rack, and cable tray to the grounding bus bar.

3.05 IDENTIFICATION

A. Identify system components, wiring, and cabling complying with TIA/EIA-606-A. Comply with requirements in Division 26 Section "Identification for Electrical Systems."

B. Comply with requirements in Division 09 Section "Interior Painting" for painting backboards. For fire-resistant plywood, do not paint over manufacturer's label.

C. See Section 271300 "Communications Horizontal Cabling" for additional identification requirements. See Evaluations for discussion of TIA/EIA standard as it applies to this Section.

D. Paint and label colors for equipment identification shall comply with TIA/EIA-606-A for Class 4 level of administration, including optional identification requirements of this standard.

E. Labels shall be preprinted or computer-printed type.

END OF SECTION 271100

SECTION 271300
TELECOM BACKBONE CABLING

PART 1 GENERAL

1.01 RELATED DOCUMENTS

A. Drawings and general provisions of the Contract, including General and Supplementary Conditions and Division 01 Specification Sections, apply to this Section.

1.02 SUMMARY

A. Section Includes:
   1. Pathways.
   2. UTP cable.
   3. 5 – 9/125 micron singlemode optical fiber cabling.
   4. Cable connecting hardware, termination panels, and cross-connects.
   5. Cabling identification products.

B. Related Sections:
   1. Division 27 Section "Communications Horizontal Cabling" for voice and data cabling associated with system panels and devices.

1.03 DEFINITIONS

A. BICSI: Building Industry Consulting Service International.

B. Cross-Connect: A facility enabling the termination of cable elements and their interconnection or cross-connection.

C. EMI: Electromagnetic interference.

D. IDC: Insulation displacement connector.

E. LAN: Local area network.

F. RCDD: Registered Communications Distribution Designer.

G. UTP: Unshielded twisted pair.

1.04 BACKBONE CABLING DESCRIPTION

A. Backbone cabling system shall provide interconnections between communications equipment rooms, main terminal space, and entrance facilities in the telecommunications cabling system structure. Cabling system consists of backbone cables, intermediate and main cross-connects, mechanical terminations, and patch cords or jumpers used for backbone-to-backbone cross-connection.

B. Backbone cabling cross-connects shall be located in termination rooms (telecom) and at entrance facilities. Bridged taps and splitters shall not be used as part of backbone cabling.

1.05 PERFORMANCE REQUIREMENTS

A. General Performance: Backbone cabling system shall comply with transmission standards in TIA/EIA-568-C.1, when tested according to test procedures of this standard.

1.06 SUBMITTALS

A. Product Data: For each type of product indicated.
   1. For all cable, include the following installation data for each type used:
      a. Nominal OD.
      b. Minimum bending radius.
      c. Maximum pulling tension.

B. Shop Drawings:
   1. System Labeling Schedules: Electronic copy of labeling schedules, in software and format selected by Owner.

2. System Labeling Schedules: Electronic copy of labeling schedules that are part of the cabling and asset identification system of the software.
3. Cabling administration drawings and printouts.
4. Wiring diagrams to show typical wiring schematics including the following:
   a. Cross-connects.
   b. Patch panels.
   c. Patch cords.
5. Cross-connects and patch panels. Detail mounting assemblies, and show elevations and physical relationship between the installed components.
6. Cable tray layout, showing cable tray route to scale, with relationship between the tray and adjacent structural, electrical, and mechanical elements. Include the following:
   a. Vertical and horizontal offsets and transitions.
   b. Clearances for access above and to side of cable trays.
   c. Vertical elevation of cable trays above the floor or bottom of ceiling structure.
   d. Load calculations to show dead and live loads as not exceeding manufacturer's rating for tray and its support elements.

C. Qualification Data: For all qualified layout technicians, installation supervisors, and field inspectors.

D. Source quality-control reports.

E. Field quality-control reports.

F. Maintenance Data: For splices and connectors to include in maintenance manuals.

G. Software and Firmware Operational Documentation:
1. Software operating and upgrade manuals.
2. Program Software Backup: On magnetic media or compact disk, complete with data files.
3. Device address list.
4. Printout of software application and graphic screens.

1.07 QUALITY ASSURANCE

A. Qualified Contractors:

B. Contractor shall provide upon completion a system warranty from the manufacturer to guarantee installation of end-to-end high performance cabling systems that meet all application requirements associated with the Category of cabling installed. The system warranty shall include all copper cable and connectivity components. The system warranty shall be for a period of at least 20 years.

C. Installer Qualifications: Cabling Installer must have personnel certified by BICSI on staff.
1. Layout Responsibility: Preparation of Shop Drawings, Cabling Administration Drawings, and field testing program development by an RCDD.
2. Installation Supervision: Installation shall be under the direct supervision of a Registered Technician (BICSI), who shall be present at all times when Work of this Section is performed at Project site.
3. Testing Supervisor: Currently certified by BICSI as an RCDD to supervise on-site testing.
4. Contractor must be a Commscope Certified Installer.

D. Testing Agency Qualifications:
1. Testing Agency's Field Supervisor: Currently certified by BICSI as an RCDD to supervise on-site testing.

E. Electrical Components, Devices, and Accessories: Listed and labeled as defined in NFPA 70, by a qualified testing agency, and marked for intended location and application.

F. Telecommunications Pathways and Spaces: Comply with TIA/EIA-569-B.

G. Grounding: Comply with ANSI-J-STD-607-A.

1.08 DELIVERY, STORAGE, AND HANDLING

A. Test cables upon receipt at Project site.
   1. Test optical fiber cable to determine the continuity of the strand end to end. Use optical loss test set.
   2. Test optical fiber cable while on reels. Use an optical time domain reflectometer to verify the cable length and locate cable defects, splices, and connector, including the loss value of each. Retain test data and include the record in maintenance data.
   3. Test each pair of UTP cable for open and short circuits.

1.09 PROJECT CONDITIONS

A. Environmental Limitations: Do not deliver or install cables and connecting materials until wet work in spaces is complete and dry, and temporary HVAC system is operating and maintaining ambient temperature and humidity conditions at occupancy levels during the remainder of the construction period.

1.10 COORDINATION

A. Coordinate layout and installation of telecommunications pathways and cabling with Owner's telecommunications and LAN equipment and service suppliers..

1.11 EXTRA MATERIALS

A. Furnish extra materials that match products installed and that are packaged with protective covering for storage and identified with labels describing contents. Furnish five percent of total quantity provided for each component, minimum of one, if less than one.

PART 2 PRODUCTS

2.01 PATHWAYS

A. General Requirements: Comply with TIA/EIA-569-B.

B. Cable Support: NRTL labeled for support of Category 6 and Category 6A cabling, designed to prevent degradation of cable performance and pinch points that could damage cable.
   1. Support brackets with cable tie slots for fastening cable ties to brackets.
   2. Lacing bars, spools, J-hooks, and D-rings.
   3. Straps and other devices.

C. Overhead Cable Runway :
   1. Manufacturers: Subject to compliance with requirements, provide products by one of the following:
      a. Chatsworth
   2. Cable Tray Material: Metal, suitable for indoors, and protected against corrosion by electroplated zinc galvanizing, complying with ASTM B 633, Type 1, not less than 0.000472 inches (0.01 mm) thick.
      a. Ladder Cable Trays: Nominally 12 inches (304.8 mm) wide, and a rung spacing of 12 inches.

D. Conduit and Boxes: Comply with requirements in Division 26 Section "Raceway and Boxes for Electrical Systems." Flexible metal conduit shall not be used. Minimum 1 inch (25.4 mm) conduit shall be provided.
   1. Outlet boxes shall two gang, with a single gang mud ring.

2.02 BACKBOARDS

A. Backboards: Plywood, fire-retardant treated, 3/4 by 48 by 96 inches (2438.4 mm). Comply with requirements in Division 06 Section "Rough Carpentry" for plywood backing panels.

2.03 UTP CABLE

A. Manufacturers: Subject to compliance with requirements, provide products by one of the following :
   1. CommScope, Inc.(Uniprise, Systimax)

2. General Cable
3. Equal

B. Description: 100-ohm, multipair UTP (quantity as noted), formed into 25-pair binder groups covered with a thermoplastic jacket.
1. Comply with ICEA S-90-661 for mechanical properties.
2. Comply with TIA/EIA-568-C.1 for performance specifications.
3. Comply with TIA/EIA-568-C.2, Category 3.
4. Listed and labeled by an NRTL acceptable to authorities having jurisdiction as complying with UL 444 and NFPA 70 for the following types:
a. Communications, Riser Rated: Type CMR, complying with NFPA 262.
b. Communication, OSP: Type PE-89

2.04 UTP CABLE HARDWARE

A. Manufacturers: Subject to compliance with requirements, provide products by one of the following:
1. Commscope

B. General Requirements for Cable Connecting Hardware: Comply with TIA/EIA-568-C.2, IDC type, with modules designed for punch-down caps or tools. Cables shall be terminated with connecting hardware of same category or higher.

C. Riser Patch Panel: 110-style IDC for Category 5e. Provide 24 port patch panels for each 25 pair cable.
1. Number of Terminals per Field: One for each conductor in assigned cables.

D. Jacks and Jack Assemblies: Modular, color-coded, eight-position modular receptacle units with integral IDC-type terminals.

E. Patch Cords: Factory-made, 4-pair cables.

2.05 PROTECTION TERMINATION EQUIPMENT

A. Voice Backbone Copper Building Entrance Terminals (BETs): Complete with lockable covers and plug-in protector modules for each pair terminated on the chassis. Gas-tube protector modules shall provide 350V over-voltage and sneak current protection. BEPs and protectors shall be manufactured by the following manufacturers:

B. Manufacturers:
1. Circa Enterprises
2. Or approved equal
a. 1880ECA1 Series
1) Single pair (for Emergency Phone): 1360B
2) Less than or equal to 25-pair to be terminated: 1880ECA1-25GT2
3) 26-pair to 50-pair to be terminated: 1880ECA1-50GT2
b. Protectors shall be:
1) 4B1E (PTC)

2.06 OPTICAL FIBER CABLE

A. Manufacturers: Subject to compliance with requirements, provide products by one of the following:
1. Corning

B. Description: Single fiber optic cable, 24 strand fiber, tight buffer, with interlocking armor sheathing.
1. Comply with ICEA S-83-596 for mechanical properties.
2. Comply with TIA/EIA-568-C.3 for performance specifications.
3. Listed and labeled by an NRTL acceptable to authorities having jurisdiction as complying with UL 444, UL 1651, and NFPA 70 for the following types:
a. Riser Rated, Nonconductive: Type OFNR, complying with NFPA 262.

C. Jacket:
   1. Jacket Color: Yellow
   2. Cable cordage jacket, fiber, unit, and group color shall be according to TIA/EIA-598-C.

IMPRINTED WITH FIBER COUNT, FIBER TYPE, AND AGGREGATE LENGTH AT REGULAR INTERVALS.

3.01 OPTICAL FIBER CABLE OSP

A. Manufacturers: Subject to compliance with requirements, provide products by one of the following:
   1. Corning Altos

B. Description: Single mode fiber optic cable, 24 strand fiber loose tube cable.
   1. Comply with ICEA S-83-596 for mechanical properties.
   2. Comply with TIA/EIA-568-C.3 for performance specifications.
   3. Listed and labeled by an NRTL acceptable to authorities having jurisdiction as complying with UL 444, UL 1651, and NFPA 70 for the following types:
      a. OSP, Nonconductive: Type PE, complying with NFPA 262.

C. Jacket:
   1. Jacket Color: Black
   2. Cable cordage jacket, fiber, unit, and group color shall be according to TIA/EIA-598-C.

D. Imprinted with fiber count, fiber type, and aggregate length at regular intervals

3.02 OPTICAL FIBER CABLE HARDWARE

A. Manufacturers: Subject to compliance with requirements, provide products by one of the following:
   1. Corning

B. Cross-Connects and Termination Panels: Modular panels housing multiple-numbered, duplex cable connectors.
   1. Number of Connectors per Field: One for each fiber of cable or cables assigned to field, plus spares and blank positions adequate to suit specified expansion criteria.

C. Jumper Cords: Factory-made, dual-fiber cables in 60-inch lengths.

D. Cable Connecting Hardware:
   1. Comply with Optical Fiber Connector Intermateability Standards (FOCIS) specifications of TIA/EIA-604-2, TIA/EIA-604-3-A, and TIA/EIA-604-12. Comply with TIA/EIA-568-C.3.
   2. Quick-connect, simplex and duplex, Type LC connectors. Insertion loss not more than 0.75 dB.

3.03 GROUNDING

A. Comply with requirements in Division 26 Section "Grounding and Bonding for Electrical Systems." for grounding conductors and connectors.

B. Comply with ANSI-J-STD-607-A.

3.04 IDENTIFICATION PRODUCTS

A. Comply with TIA/EIA-606-A and UL 969 for a system of labeling materials, including label stocks, laminating adhesives, and inks used by label printers.

3.05 SOURCE QUALITY CONTROL

A. Testing Agency: Engage a qualified testing agency to evaluate cables.

B. Factory test cables on reels according to TIA/EIA-568-C.1.

C. Factory test UTP cables according to TIA/EIA-568-C.2.

D. Factory test multimode optical fiber cables according to TIA/EIA-526-14-A and TIA/EIA-568-C.3.

E. Cable will be considered defective if it does not pass tests and inspections.

F. Prepare test and inspection reports.

PART 3 EXECUTION

4.01 ENTRANCE FACILITIES

A. Coordinate backbone cabling with the protectors and demarcation point provided by communications service provider.

4.02 WIRING METHODS

A. Wiring Method: Install cables in raceways and cable trays except within cabinets. Conceal raceway and cables except in unfinished spaces.
   1. Install plenum cable in all spaces.
   2. Comply with requirements for raceways and boxes specified in Division 26 Section "Raceway and Boxes for Electrical Systems."

B. Wiring within Enclosures: Bundle, lace, and train cables within enclosures. Connect to terminal points with no excess and without exceeding manufacturer's limitations on bending radii. Provide and use lacing bars and distribution spools.

4.03 INSTALLATION OF PATHWAYS

A. Cable Trays: Comply with NEMA VE 2 and TIA/EIA-569-B.

B. Comply with requirements for demarcation point, pathways, cabinets, and racks specified in Section 271100 "Telecommunications Pathways and Spaces." Drawings indicate general arrangement of pathways and fittings.

C. Comply with TIA/EIA-569-B for pull-box sizing and length of conduit and number of bends between pull points.

D. Comply with requirements in Division 26 Section "Raceway and Boxes for Electrical Systems" for installation of conduits and wireways.

E. Install manufactured conduit sweeps and long-radius elbows whenever possible.

F. Pathway Installation in Termination Rooms (Telecom):
   1. Position vertical conduit ends adjacent to a corner where plywood backboard is installed, or in the corner of room where multiple sheets of plywood are installed around perimeter walls of room.
   2. Secure conduits to backboard when entering room from overhead.
   3. Install metal conduits with grounding bushings and connect with grounding conductor to grounding system.

G. Backboards: Install backboards with 96-inch dimension vertical. Butt adjacent sheets tightly, and form smooth gap-free corners and joints.

4.04 INSTALLATION OF CABLES

A. Comply with NECA 1.

B. General Requirements for Cabling:
   1. Comply with TIA/EIA-568-C.1.
   2. Comply with BICSI ITSIM, Ch. 6, "Cable Termination Practices."
   3. For UTP backbone cable, install 110-style IDC termination hardware unless otherwise indicated.
   4. Terminate all conductors; no cable shall contain unterminated elements. Make terminations only at indicated outlets, terminals, cross-connects, and patch panels.
   5. Cables may not be spliced. Secure and support cables at intervals not exceeding 30 inches (762 mm) and not more than 6 inches (152.4 mm) from cabinets, boxes, fittings, outlets, racks, frames, and terminals.
   6. Install lacing bars to restrain cables, to prevent straining connections, and to prevent bending cables to smaller radii than minimums recommended by manufacturer.

7. Bundle, lace, and train conductors to terminal points without exceeding manufacturer's limitations on bending radii, but not less than radii specified in BICSI ITSIM, "Cabling Termination Practices" Chapter. Use lacing bars and distribution spools.
8. Do not install bruised, kinked, scored, deformed, or abraded cable. Do not splice cable between termination, tap, or junction points. Remove and discard cable if damaged during installation and replace it with new cable.
9. Cold-Weather Installation: Bring cable to room temperature before de-reeling. Heat lamps shall not be used for heating.
10. In the communications equipment room, leave a minimum 3 foot (91.44 cm) and no more than a 10 foot (304.8 cm) service loop on the station end of cable.
11. Pulling Cable: Comply with BICSI ITSIM, Ch. 4, "Pulling Cable." Monitor cable pull tensions.
12. All cable should be protected from direct paint, or incidental overspray.

C. UTP Cable Installation:
1. Comply with TIA/EIA-568-C.2.

D. Optical Fiber Cable Installation:
1. Comply with TIA/EIA-568-C.3.
2. Cable shall be terminated on connecting hardware that is rack or cabinet mounted.

E. Open-Cable Installation:
1. Install cabling with horizontal and vertical cable guides in telecommunications spaces with terminating hardware and interconnection equipment.
2. Suspend UTP cable not in a wireway or pathway, a minimum of 8 inches (203.2 mm) above ceilings by cable supports not more than 60” apart.
3. Cable shall not be run through structural members or in contact with pipes, ducts, or other potentially damaging items.

F. Group connecting hardware for cables into separate logical fields.

G. Separation from EMI Sources:
1. Comply with BICSI TDMM and TIA/EIA-569-B recommendations for separating unshielded copper voice and data communication cable from potential EMI sources, including electrical power lines and equipment.
2. Separation between open communications cables or cables in nonmetallic raceways and unshielded power conductors and electrical equipment shall be as follows:
   a. Electrical Equipment Rating Less Than 2 kVA: A minimum of 5 inches (127 mm).
   b. Electrical Equipment Rating between 2 and 5 kVA: A minimum of 12 inches (304.8 mm).
   c. Electrical Equipment Rating More Than 5 kVA: A minimum of 24 inches (609.6 mm).
3. Separation between communications cables in grounded metallic raceways and unshielded power lines or electrical equipment shall be as follows:
   a. Electrical Equipment Rating Less Than 2 kVA: A minimum of 2-1/2 inches (64 mm).
   b. Electrical Equipment Rating between 2 and 5 kVA: A minimum of 6 inches (152.4 mm).
   c. Electrical Equipment Rating More Than 5 kVA: A minimum of 12 inches (304.8 mm).
4. Separation between communications cables in grounded metallic raceways and power lines and electrical equipment located in grounded metallic conduits or enclosures shall be as follows:
   a. Electrical Equipment Rating Less Than 2 kVA: No requirement.
   b. Electrical Equipment Rating between 2 and 5 kVA: A minimum of 3 inches (76.2 mm).
   c. Electrical Equipment Rating More Than 5 kVA: A minimum of 6 inches (152.4 mm).
5. Separation between Communications Cables and Electrical Motors and Transformers, 5 kVA or HP and Larger: A minimum of 48 inches (1219.2 mm).

4.05 FIRESTOPPING

A. Comply with requirements in Division 07 Section "Penetration Firestopping. "Comply with TIA/EIA-569-B, "Firestopping."

B. Comply with BICSI TDMM, "Firestopping Systems" Article.

4.06 GROUNDING

A. Install grounding according to BICSI TDMM, "Grounding, Bonding, and Electrical Protection" Chapter.

B. Comply with ANSI-J-STD-607-A.

C. Locate grounding bus bar to minimize the length of bonding conductors. Fasten to wall allowing at least 2-inch clearance behind the grounding bus bar. Connect grounding bus bar with a minimum No. 4 AWG grounding electrode conductor from grounding bus bar to suitable electrical building ground.

D. Bond metallic equipment to the grounding bus bar, using not smaller than No. 6 AWG equipment grounding conductor.

4.07 IDENTIFICATION

A. Identify system components, wiring, and cabling complying with TIA/EIA-606-A. Comply with requirements for identification specified in Division 26 Section "Identification for Electrical Systems."
   1. Administration Class: 4.
   2. Color-code cross-connect fields and apply colors to voice and data service backboards, connections, covers, and labels.

B. Comply with requirements in Division 09 Section "Interior Painting" for painting backboards. For fire-resistant plywood, do not paint over manufacturer's label.

C. See Division 27 Section "Communications Horizontal Cabling" for additional identification requirements. See Evaluations for discussion about TIA/EIA standard as it applies to this Section. Paint and label colors for equipment identification shall comply with TIA/EIA-606-A for Class 2 level of administration.

D. Comply with requirements in Section 271500 "Communications Horizontal Cabling" for cable and asset management software.

E. Cable Schedule: Install in a prominent location in each equipment room and wiring closet. List incoming and outgoing cables and their designations, origins, and destinations. Protect with rigid frame and clear plastic cover. Furnish an electronic copy of final comprehensive schedules for Project.

F. Cabling Administration Drawings: Show building floor plans with cabling administration-point labeling. Identify labeling convention and show labels for telecommunications closets, backbone pathways and cables, entrance pathways and cables, terminal hardware and positions, horizontal cables, work areas and workstation terminal positions, grounding buses and pathways, and equipment grounding conductors.

G. Cable and Wire Identification:
   1. Label each cable within 4 inches (101.6 mm) of each termination and tap, where it is accessible in a cabinet or junction or outlet box, and elsewhere as indicated.
   2. Label each terminal strip and screw terminal in each cabinet, rack, or panel.
      a. Individually number wiring conductors connected to terminal strips and identify each cable or wiring group being extended from a panel or cabinet to a building-mounted device with name and number of particular device as shown.
      b. Label each unit and field within distribution racks and frames.

H. Labels shall be preprinted or computer-printed type with printing area and font color that contrasts with cable jacket color but still complies with requirements in TIA/EIA 606-A, for the following:

1. Cables use flexible vinyl or polyester that flexes as cables are bent.

4.08 FIELD QUALITY CONTROL

A. Testing Agency: Engage a qualified testing agency to perform tests and inspections.

B. Perform tests and inspections.

C. Tests and Inspections:
   1. Visually inspect UTP and optical fiber jacket materials for NRTL certification markings. Inspect cabling terminations in communications equipment rooms for compliance with color-coding for pin assignments, and inspect cabling connections for compliance with TIA/EIA-568-C.1.
   2. Visually inspect cable placement, cable termination, grounding and bonding, equipment and patch cords, and labeling of all components.
   3. Test UTP copper cabling for DC loop resistance, shorts, opens, intermittent faults, and polarity between conductors. Test operation of shorting bars in connection blocks. Test cables after termination but not cross-connection.
      a. Test instruments shall meet or exceed applicable requirements in TIA/EIA-568-C.2. Perform tests with a tester that complies with performance requirements in "Test Instruments (Normative)" Annex, complying with measurement accuracy specified in "Measurement Accuracy (Informative)" Annex. Use only test cords and adapters that are qualified by test equipment manufacturer for channel or link test configuration.
   4. Optical Fiber Cable Tests:
      a. Test instruments shall meet or exceed applicable requirements in TIA/EIA-568-C.1. Use only test cords and adapters that are qualified by test equipment manufacturer for channel or link test configuration.
      b. Link End-to-End Attenuation Tests:
         1) Horizontal and multimode backbone link measurements: Test at 1310 and 1550 nm in both directions according to ANSI/TIA/EIA 568-C standards
         2) Attenuation test results for backbone links shall be less than 2.0 dB.

D. Data for each measurement shall be documented. Data for submittals shall be printed in a summary report that is formatted similar to Table 10.1 inch (256.54 mm) BICSI TDMM, or transferred from the instrument to the computer, saved as text files, and printed and submitted.

E. Remove and replace cabling where test results indicate that they do not comply with specified requirements.

F. End-to-end cabling will be considered defective if it does not pass tests and inspections.

G. Prepare test and inspection reports.

END OF SECTION 271300

This page intentionally left blank

SECTION 271500
COMMUNICATIONS HORIZONTAL CABLING

PART 1 GENERAL

1.01 RELATED DOCUMENTS

A. Drawings and general provisions of the Contract, including General and Supplementary Conditions and Division 01 Specification Sections, apply to this Section.

1.02 SUMMARY

A. Section Includes:
   1. Pathways.
   2. UTP cabling.
   3. Cable connecting hardware, patch panels, and cross-connects.
   4. Telecommunications outlet/connectors.
   5. Cabling system identification products.
   6. Cable management system.

B. Related Sections:
   1. Section 271100 "Telecommunications Pathways and Spaces" for voice and data cabling associated with system panels and devices.
   2. Section 271300 “Communications Backbone Cabling” for voice and data cabling associated with system panels and devices.

1.03 DEFINITIONS

A. Basket Cable Tray: A fabricated structure consisting of wire mesh bottom and side rails.

B. BICSI: Building Industry Consulting Service International.

C. EMI: Electromagnetic interference.

D. LAN: Local area network.

E. Outlet/Connectors: A connecting device in the work area on which horizontal cable or outlet cable terminates.

F. RCDD: Registered Communications Distribution Designer.

G. UTP: Unshielded twisted pair.

1.04 HORIZONTAL CABLING DESCRIPTION

A. Horizontal cable and its connecting hardware provide the means of transporting signals between the telecommunications outlet/connector and the horizontal cross-connect located in the communications termination room (Telecom). This cabling and its connecting hardware are called "permanent link," a term that is used in the testing protocols.
   1. TIA/EIA-568-C.2 requires that a minimum of two telecommunications outlet/connectors be installed for each work area, however, some locations designated by the owner shall have a single data outlet/connector.
   2. Horizontal cabling shall contain no more that one transition point or consolidation point between the horizontal cross-connect and the telecommunications outlet/connector.
   3. Bridged taps and splices shall not be installed in the horizontal cabling.
   4. Splitters shall not be installed as part of the optical fiber cabling.

B. A work area is approximately 100 sq. ft., and includes the components that extend from the telecommunications outlet/connectors to the station equipment.

C. The maximum allowable horizontal cable length is 295 feet (8991.6 cm). This maximum allowable length does not include an allowance for the length of 16 feet (487.68 cm) to the workstation equipment. The maximum allowable length does not include an allowance for the length of 16 feet in the horizontal cross-connect.

1.05 PERFORMANCE REQUIREMENTS

A. General Performance: Horizontal cabling system shall comply with transmission standards in TIA/EIA-568-C.1, when tested according to test procedures of this standard.

1.06 SUBMITTALS

A. Product Data: For each type of product indicated.
   1. For all cable, include the following installation data for each type used:
      a. Nominal OD.
      b. Minimum bending radius.
      c. Maximum pulling tension.

B. Shop Drawings:
   1. System Labeling Schedules: Electronic copy of labeling schedules, in software and format selected by Owner.
   2. System Labeling Schedules: Electronic copy of labeling schedules that are part of the cabling and asset identification system of the software.
   3. Cabling administration drawings and printouts.
   4. Wiring diagrams to show typical wiring schematics, including the following:
      a. Cross-connects.
      b. Patch panels.
      c. Patch cords.
   5. Cross-connects and patch panels. Detail mounting assemblies, and show elevations and physical relationship between the installed components.
   6. Cable tray layout, showing cable tray route to scale, with relationship between the tray and adjacent structural, electrical, and mechanical elements. Include the following:
      a. Vertical and horizontal offsets and transitions.
      b. Clearances for access above and to side of cable trays.
      c. Vertical elevation of cable trays above the subfloor.

C. Samples: For workstation outlets, jacks, jack assemblies, in specified finish, one for each size and outlet configuration.

D. Qualification Data: For all qualified layout technicians, installation supervisors, and field inspector.

E. Source quality-control reports.

F. Field quality-control reports.

G. Maintenance Data: For splices and connectors to include in maintenance manuals.

H. Software and Firmware Operational Documentation:
   1. Software operating and upgrade manuals.
   2. Program Software Backup: On magnetic media or compact disk, complete with data files.
   3. Device address list.
   4. Printout of software application and graphic screens.

1.07 QUALITY ASSURANCE

A. Contractor shall provide upon completion a system warranty from the manufacturer to guarantee installation of end-to-end high performance cabling systems that meet all application requirements associated with the Category of cabling installed. The system warranty shall include all copper cable and connectivity components. The system warranty shall be for a period of at least 20 years.

B. Installer Qualifications: Cabling Installer must have personnel certified by BICSI on staff.
   1. Layout Responsibility: Preparation of Shop Drawings, Cabling Administration Drawings, and field testing program development by an RCDD.
   2. Installation Supervision: Installation shall be under the direct supervision of a Registered Technician (BICSI), who shall be present at all times when Work of this Section is

performed at Project site.
3. Testing Supervisor: Currently certified by BICSI as an RCDD to supervise on-site testing.
4. Contractor must be a Commscope Certified Installer.

C. Testing Agency Qualifications:
1. Testing Agency's Field Supervisor: Currently certified by BICSI as an RCDD to supervise on-site testing.

D. Electrical Components, Devices, and Accessories: Listed and labeled as defined in NFPA 70, by a qualified testing agency, and marked for intended location and application.

E. Telecommunications Pathways and Spaces: Comply with TIA/EIA-569-B.

F. Grounding: Comply with ANSI-J-STD-607-A.

1.08 DELIVERY, STORAGE, AND HANDLING

A. Test cables upon receipt at Project site.
1. Test each pair of UTP cable for open and short circuits.

1.09 PROJECT CONDITIONS

A. Environmental Limitations: Do not deliver or install cables and connecting materials until wet work in spaces is complete and dry, and temporary HVAC system is operating and maintaining ambient temperature and humidity conditions at occupancy levels during the remainder of the construction period.

1.10 COORDINATION

A. Coordinate layout and installation of telecommunications pathways and cabling with Owner's telecommunications and LAN equipment and service suppliers.

B. Coordinate telecommunications outlet/connector locations with location of power receptacles at each work area. This coordination will generally involve the placement of the raised floor floorboxes and the outlet arrangements therein.

1.11 EXTRA MATERIALS

A. Furnish extra materials that match products installed and that are packaged with protective covering for storage and identified with labels describing contents.
1. Patch-Panel Units: Two of each type.
2. Device Plates: Three of each type.

PART 2 PRODUCTS

2.01 PATHWAYS

A. General Requirements: Comply with TIA/EIA-569-B.

B. Cable Support: NRTL labeled for support of Category 6 cabling, designed to prevent degradation of cable performance and pinch points that could damage cable.
1. Underfloor basket cable tray with floor support brackets for fastening to the subfloor.
2. Lacing bars, spools, J-hooks, and D-rings.
3. Straps and other devices.

C. Basket Cable Trays:
1. Manufacturers: Subject to compliance with requirements, provide products by one of the following:
a. WBT
b. Cablofil Inc.
c. Cooper B-Line, Inc.
d. GS Metals Corp.
2. Cable Tray Materials: Metal, suitable for indoors, and protected against corrosion by electroplated zinc galvanizing, complying with ASTM B 633, Type 1, not less than 0.000472 inch (0.01 mm) thick.

a. Basket Cable Trays: Width as noted – 2 - 24 inches (609.6 mm) - and 4 inch (101.6 mm) deep. Wire mesh spacing shall not exceed 2 by 4 inches.

D. Conduit and Boxes: Comply with requirements in Division 26 Section "Raceway and Boxes for Electrical Systems." Minimum size of conduit shall be 1 inch (25.4 mm).
1. Wall outlet boxes shall be 2 gang, with a single gang trim ring.

2.02 BACKBOARDS

A. Backboards: Plywood, fire-retardant treated, 3/4 by 48 by 96 inches (2438.4 mm). Comply with requirements in Division 06 Section "Rough Carpentry" for plywood backing panels.

2.03 UTP CABLE

A. Manufacturers: Subject to compliance with requirements, provide products by one of the following:
1. Commscope (Uniprise, Systimax)

B. Description: 100-ohm, 4-pair UTP.
1. Comply with ICEA S-90-661 for mechanical properties.
2. Comply with TIA/EIA-568-C.1 for performance specifications.
3. Comply with TIA/EIA-568-C.2, Category 6.
4. Comply with TIA/EIA-568-C.2, Category 6A.
5. Listed and labeled by an NRTL acceptable to authorities having jurisdiction as complying with UL 444 and NFPA 70 for the following types:
a. Communications, Plenum Rated: Type CMP, complying with NFPA 262.

2.04 UTP CABLE HARDWARE

A. Manufacturers: Subject to compliance with requirements, provide products by one of the following:
1. Commscope

B. General Requirements for Cable Connecting Hardware: Comply with TIA/EIA-568-C.2, IDC type, with modules designed for punch-down caps or tools. Cables shall be terminated with connecting hardware of same category or higher.

C. Patch Panel: Modular panels housing multiple-numbered jack units with IDC-type connectors at each jack for permanent termination of pair groups of installed cables.
1. Number of Jacks per Field: One for each four-pair UTP cable indicated.

D. Jacks and Jack Assemblies: Modular, color-coded, eight-position modular receptacle units with integral IDC-type terminals.

E. Patch Cords: Factory-made, four-pair cables in lengths determined by shop drawings of rack elevations (minimum length of 6 feet (182.88 cm)); terminated with eight-position modular plug at each end.
1. Patch cords shall have bend-relief-compliant boots and color-coded icons to ensure Category 6 and Category 6A performance. Patch cords shall have latch guards to protect against snagging.

2.05 TELECOMMUNICATIONS OUTLET/CONNECTORS

A. Jacks: 100-ohm, balanced, twisted-pair connector; four-pair, eight-position modular. Comply with TIA/EIA-568-C.1.

B. Workstation Outlets: Provide with the number of ports as noted – 1, 2, or 4, ports - connector assemblies mounted in single faceplate.
1. Floorbox Faceplate: Provide adapter plates to mount in the provided floorboxes for the appropriate cable solution being provided, ie. Commscope adapter plate for Commscope outlet connectors.
2. Legend: Machine printed, in the field, using adhesive-tape label or snap-in, clear-label covers and machine-printed paper inserts.

2.06 GROUNDING

A. Comply with requirements in Division 26 Section "Grounding and Bonding for Electrical Systems" for grounding conductors and connectors.

B. Comply with ANSI-J-STD-607-A.

2.07 IDENTIFICATION PRODUCTS

A. Comply with TIA/EIA-606-A and UL 969 for labeling materials, including label stocks, laminating adhesives, and inks used by label printers.

B. Comply with requirements in Division 26 Section "Identification for Electrical Systems."

2.08 SOURCE QUALITY CONTROL

A. Testing Agency: Engage a qualified testing agency to evaluate cables.

B. Factory test UTP cables on reels according to TIA/EIA-568-C.1.

C. Factory test UTP cables according to TIA/EIA-568-C.2.

D. Cable will be considered defective if it does not pass tests and inspections.

E. Prepare test and inspection reports.

PART 3 EXECUTION

3.01 ENTRANCE FACILITIES

A. Coordinate backbone cabling with the protectors and demarcation point provided by communications service provider.

3.02 WIRING METHODS

A. Wiring Method: Install cables in raceways and cable trays except within cabinets. Conceal raceway and cables except in unfinished spaces.
   1. Install plenum cable in all spaces.
   2. Comply with requirements for raceways and boxes specified in Division 26 Section "Raceway and Boxes for Electrical Systems."

B. Wiring within Enclosures: Bundle, lace, and train cables to terminal points with no excess and without exceeding manufacturer's limitations on bending radii. Provide and use lacing bars and distribution spools.

3.03 INSTALLATION OF PATHWAYS

A. Cable Trays: Comply with NEMA VE 2 and TIA/EIA-569-B.

B. Comply with requirements for demarcation point, pathways, cabinets, and racks specified in Section 271100 "Telecommunications Pathways and Spaces." Drawings indicate general arrangement of pathways and fittings.

C. Comply with TIA/EIA-569-B for pull-box sizing and length of conduit and number of bends between pull points.

D. Comply with requirements in Division 26 Section "Raceway and Boxes for Electrical Systems" for installation of conduits and wireways.

E. Install manufactured conduit sweeps and long-radius elbows whenever possible.

F. Pathway Installation in Termination Rooms (Telecom):
   1. Position conduit ends adjacent to a corner on backboard where a single piece of plywood is installed, or in the corner of room where multiple sheets of plywood are installed around perimeter walls of room.
   2. Install basket cable trays to route cables from underfloor up into the floor mounted racks.
   3. Secure conduits to backboard when entering room from overhead.
   4. Extend conduits 3 inches (76.2 mm) above finished floor.
   5. Install metal conduits with grounding bushings and connect with grounding conductor to grounding system.

G. Backboards: Install backboards with 96-inch dimension vertical. Butt adjacent sheets tightly, and form smooth gap-free corners and joints.

3.04 INSTALLATION OF CABLES

A. Comply with NECA 1.

B. General Requirements for Cabling:
1. Comply with TIA/EIA-568-C.1.
2. Comply with BICSI ITSIM, Ch. 6, "Cable Termination Practices."
3. Terminate all conductors; no cable shall contain unterminated elements. Make terminations only at indicated outlets, terminals, cross-connects, and patch panels.
4. Cables may not be spliced. Secure and support cables at intervals not exceeding 30 inches (762 mm), not more than 6 inches (152.4 mm) from cabinets, boxes, fittings, outlets, racks, frames, and terminals.
5. Install lacing bars to restrain cables, to prevent straining connections, and to prevent bending cables to smaller radii than minimums recommended by manufacturer.
6. Bundle, lace, and train conductors to terminal points without exceeding manufacturer's limitations on bending radii, but not less than radii specified in BICSI ITSIM, "Cabling Termination Practices" Chapter. Install lacing bars and distribution spools.
7. Do not install bruised, kinked, scored, deformed, or abraded cable. Do not splice cable between termination, tap, or junction points. Remove and discard cable if damaged during installation and replace it with new cable.
8. Cold-Weather Installation: Bring cable to room temperature before de-reeling. Heat lamps shall not be used for heating.
9. In the termination room (Telecom), leave a minimum 3 foot (91.44 cm) and no more than a 10 foot (304.8 cm) service loop on each cable.
10. For every horizontal cable pull specified, neatly coil a 10’ 0” slack loop at the station (office) end of the cable. Leave slack loop at point of conduit entrance.
11. For every horizontal cable pull specified for wireless access points, neatly coil a 15’ 0” slack loop at the point of termination, and support cable properly so it does not rest on any conduit, ducts, or other items in the ceiling space.
12. Pulling Cable: Comply with BICSI ITSIM, Ch. 4, "Pulling Cable." Monitor cable pull tensions.
13. All cable should be protected from direct paint, or incidental overspray.

C. UTP Cable Installation:
1. Comply with TIA/EIA-568-C.2.
2. Do not untwist UTP cables more than 1/2 inch (12.7 mm) from the point of termination to maintain cable geometry.

D. Open-Cable Installation:
1. Install cabling with horizontal and vertical cable guides in telecommunications spaces with terminating hardware and interconnection equipment.
2. Suspend UTP cable not in a wireway or pathway a minimum of 8 inches (203.2 mm) above ceilings by cable supports not more than 48 inches apart.
3. Cable shall not be run through structural members or in contact with pipes, ducts, or other potentially damaging items.

E. Installation of Cable Routed Exposed under Raised Floors:
1. Install plenum-rated cable only.
2. Install cabling after the flooring system has been installed in raised floor areas.

F. Group connecting hardware for cables into separate logical fields.

G. Separation from EMI Sources:
1. Comply with BICSI TDMM and TIA/EIA-569-B for separating unshielded copper voice and data communication cable from potential EMI sources, including electrical power lines and equipment.

2. Separation between open communications cables or cables in nonmetallic raceways and unshielded power conductors and electrical equipment shall be as follows:
   a. Electrical Equipment Rating Less Than 2 kVA: A minimum of 5 inches (127 mm).
   b. Electrical Equipment Rating between 2 and 5 kVA: A minimum of 12 inches (304.8 mm).
   c. Electrical Equipment Rating More Than 5 kVA: A minimum of 24 inches (609.6 mm).
3. Separation between communications cables in grounded metallic raceways and unshielded power lines or electrical equipment shall be as follows:
   a. Electrical Equipment Rating Less Than 2 kVA: A minimum of 2-1/2 inches (64 mm).
   b. Electrical Equipment Rating between 2 and 5 kVA: A minimum of 6 inches (152.4 mm).
   c. Electrical Equipment Rating More Than 5 kVA: A minimum of 12 inches (304.8 mm).
4. Separation between communications cables in grounded metallic raceways and power lines and electrical equipment located in grounded metallic conduits or enclosures shall be as follows:
   a. Electrical Equipment Rating Less Than 2 kVA: No requirement.
   b. Electrical Equipment Rating between 2 and 5 kVA: A minimum of 3 inches (76.2 mm).
   c. Electrical Equipment Rating More Than 5 kVA: A minimum of 6 inches (152.4 mm).
5. Separation between Communications Cables and Electrical Motors and Transformers, 5 kVA or HP and Larger: A minimum of 48 inches (1219.2 mm).
6. Separation between Communications Cables and Fluorescent Fixtures: A minimum of 5 inches (127 mm).

3.05 FIRESTOPPING

A. Comply with requirements in Division 07 Section "Penetration Firestopping."

B. Comply with TIA/EIA-569-B, "Firestopping."

C. Comply with BICSI TDMM, "Firestopping Systems" Article.

3.06 GROUNDING

A. Install grounding according to BICSI TDMM, "Grounding, Bonding, and Electrical Protection" Chapter.

B. Comply with ANSI-J-STD-607-A.

C. Locate grounding bus bar to minimize the length of bonding conductors. Fasten to wall allowing at least 2-inch clearance behind the grounding bus bar. Connect grounding bus bar with a minimum No. 4 AWG grounding electrode conductor from grounding bus bar to suitable electrical building ground.

D. Bond metallic equipment to the grounding bus bar, using not smaller than No. 6 AWG equipment grounding conductor.

3.07 IDENTIFICATION

A. Identify system components, wiring, and cabling complying with TIA/EIA-606-A. Comply with requirements for identification specified in Division 26 Section "Identification for Electrical Systems."
   1. Administration Class: 4.
   2. Color-code cross-connect fields. Apply colors to voice and data service backboards, connections, covers, and labels.

B. Using cable management system software specified in Part 2, develop Cabling Administration Drawings for system identification, testing, and management. Use unique, alphanumeric designation for each cable and label cable, jacks, connectors, and terminals to which it connects with same designation. At completion, cable and asset management software shall reflect as-built conditions.

C. Comply with requirements in Division 09 Section "Interior Painting" for painting backboards. For fire-resistant plywood, do not paint over manufacturer's label.

D. Paint and label colors for equipment identification shall comply with TIA/EIA-606-A for Class 4 level of administration.

E. Cable Schedule: Post in prominent location in each equipment room and wiring closet. List incoming and outgoing cables and their designations, origins, and destinations. Protect with rigid frame and clear plastic cover. Furnish an electronic copy of final comprehensive schedules for Project.

F. Cabling Administration Drawings: Show building floor plans with cabling administration-point labeling. Identify labeling convention and show labels for telecommunications rooms, backbone pathways and cables, entrance pathways and cables, terminal hardware and positions, horizontal cables, work areas and workstation terminal positions, grounding buses and pathways, and equipment grounding conductors. Follow convention of TIA/EIA-606-A. Furnish electronic record of all drawings, in software and format selected by Owner.

G. Cable and Wire Identification:
   1. Label each cable within 4 inches (101.6 mm) of each termination and tap, where it is accessible in a cabinet or junction or outlet box, and elsewhere as indicated.
   2. Each wire connected to building-mounted devices is not required to be numbered at device if color of wire is consistent with associated wire connected and numbered within panel or cabinet.
   3. Label each terminal strip and screw terminal in each cabinet, rack, or panel.
      a. Individually number wiring conductors connected to terminal strips, and identify each cable or wiring group being extended from a panel or cabinet to a building-mounted device shall be identified with name and number of particular device as shown.
      b. Label each unit and field within distribution racks and frames.
   4. Identification within Connector Fields in Equipment Rooms and Wiring Closets: Label each connector and each discrete unit of cable-terminating and connecting hardware. Where similar jacks and plugs are used for both voice and data communication cabling, use a different color for jacks and plugs of each service.

H. Labels shall be preprinted or computer-printed type with printing area and font color that contrasts with cable jacket color but still complies with requirements in TIA/EIA-606-A.
   1. Cables use flexible vinyl or polyester that flex as cables are bent.

3.08 FIELD QUALITY CONTROL

A. Testing Agency: Engage a qualified testing agency to perform tests and inspections.

B. Perform tests and inspections.

C. Tests and Inspections:
   1. Visually inspect UTP and optical fiber cable jacket materials for NRTL certification markings. Inspect cabling terminations in communications equipment rooms for compliance with color-coding for pin assignments, and inspect cabling connections for compliance with TIA/EIA-568-C.1.
   2. Visually confirm Category 6 marking of outlets, cover plates, outlet/connectors, and patch panels.
   3. Visually inspect cable placement, cable termination, grounding and bonding, equipment and patch cords, and labeling of all components.
   4. Test UTP backbone copper cabling for DC loop resistance, shorts, opens, intermittent faults, and polarity between conductors. Test operation of shorting bars in connection blocks. Test cables after termination but not cross-connection.
      a. Test instruments shall meet or exceed applicable requirements in TIA/EIA-568-C.2. Perform tests with a tester that complies with performance requirements in "Test Instruments (Normative)" Annex, complying with measurement accuracy specified in "Measurement Accuracy (Informative)" Annex. Use only test cords and adapters that

are qualified by test equipment manufacturer for channel or link test configuration.

5. UTP Performance Tests:
   a. Test for each outlet. Perform the following tests according to TIA/EIA-568-C.1 and TIA/EIA-568-C.2:
      1) Wire map.
      2) Length (physical vs. electrical, and length requirements).
      3) Insertion loss.
      4) Near-end crosstalk (NEXT) loss.
      5) Power sum near-end crosstalk (PSNEXT) loss.
      6) Equal-level far-end crosstalk (ELFEXT).
      7) Power sum equal-level far-end crosstalk (PSELFEXT).
      8) Return loss.
      9) Propagation delay.
      10) Delay skew.
6. Final Verification Tests: Perform verification tests for UTP systems after the complete communications cabling and workstation outlet/connectors are installed.
   a. Voice Tests: These tests assume that dial tone service has been installed. Connect to the network interface device at the demarcation point. Go off-hook and listen and receive a dial tone. If a test number is available, make and receive a local, long distance, and digital subscription line telephone call.
   b. Data Tests: These tests assume the Information Technology Staff has a network installed and is available to assist with testing. Connect to the network interface device at the demarcation point. Log onto the network to ensure proper connection to the network.

D. Document data for each measurement. Data for submittals shall be printed in a summary report that is formatted similar to Table 10.1 inch (256.54 mm) BICSI TDMM, or transferred from the instrument to the computer, saved as text files, and printed and submitted.

E. End-to-end cabling will be considered defective if it does not pass tests and inspections.

F. Prepare test and inspection reports.

3.09 DEMONSTRATION

A. Engage a factory-authorized service representative to train Owner's maintenance personnel in cable-plant management operations, including changing signal pathways for different workstations, rerouting signals in failed cables, and keeping records of cabling assignments and revisions when extending wiring to establish new workstation outlets. Include training in cabling administration software.

END OF SECTION 271500

This page intentionally left blank

SECTION 274100
– GENERAL TECHNOLOGY SYSTEMS REQUIREMENTS

PART 1 - GENERAL

1.01 SUMMARY

A. This Section includes general requirements for Technology systems installations:
   1. Summary of work.
   2. Project Coordination.
   3. References and Standards.
   4. Industry Standards.
   5. Allowances.
   6. Unit Prices.
   7. Submittals.
   8. Substitutions.
   9. Materials and Equipment.
   10. Summary Test Report.
   11. Warranties.
   12. Permits.

1.02 RELATED DOCUMENTS

A. Drawings and general provisions of Contract, including General and Supplementary Conditions apply to this section of Division 27.

B. The following general and basic sections of Division 27 pertain to all system specific sections of Division 27. These general and basic information sections shall be complied with by all Technology systems contractors:
   1. General Technology Systems Requirements
   2. Basic Technology Systems Requirements
   3. Basic Technology Systems Materials and Methods

1.03 SUMMARY OF WORK

A. The work consists of, but is not limited to, the construction of integrated audio, video, and control systems. Refer to individual Division 27 sections for additional work summaries and responsibilities.

B. Owner furnished items: The Owner will furnish material and equipment as indicated in the contract documents to be incorporated into the Work. These items are assigned to the installer and costs for receiving, handling, storage, if required, and installation are included in the Contract Sum.
   1. The Installer's responsibilities are the same as if the Installer furnished the materials or equipment.
   2. The Owner will arrange and pay for delivery of Owner-furnished items FOB job site and the installer will inspect deliveries for damage. If Owner-furnished items are damaged, defective or missing, document damaged items with the transport company and the Owner will arrange for replacement. The Owner will also arrange for manufacturer's field services, and the delivery of manufacturer's warranties and bonds to the Installer.
   3. The Installer is responsible for designating the delivery dates of Owner-furnished items and for receiving, unloading and handling Owner- furnished items at the site. The Installer is responsible for protecting Owner-furnished items from damage, including damage from exposure to the elements, and to repair or replace items damaged as a result of his operations.

C. General: Comply with requirements of Owner for completion of work. The work will be conducted to provide the least possible interference to the activities of the Owner's personnel and operations.

PROJECT COORDINATION

A. General: Well in advance of installation of every major unit of work which requires coordination and interfacing with other work, meet at project site with installers and representatives of manufacturers and fabricators who are involved in or affected by unit of work and in its coordination and integration with other work which has preceded or will follow. Do not proceed with the work if associated pre-installation conference cannot be concluded successfully. Instigate actions to resolve impediments to performance of the work.

B. Millwork Contractor: Coordinate with the Owner's Millwork contractor the wiring configuration, connection requirements, and dimensional layout of the furniture to be provided. Determine whether proposed furniture design will interface with Technology systems design as shown. Notify Architect/Engineer of any discrepancy.

2.02 REFERENCE STANDARDS AND DEFINITIONS

A. General: Basic Contract definitions are included in the General Conditions.

B. Indicated: The term "indicated" refers to graphic representations, notes, or schedules on the Drawings, other paragraphs or schedules in the Specifications, and similar requirements in the Contract Documents. Where terms such as "shown," "noted," "scheduled," and "specified" are used, it is to help the reader locate the reference; no limitation on location is intended.

C. Directed: Terms such as "directed," "requested," "authorized," "selected," "approved," "required," and "permitted" mean "directed by the Engineer," "requested by the Engineer," and similar phrases.

D. Approve: The term "approved," where used in conjunction with the Engineer's action on the Contractor's submittals, applications, and requests, is limited to the Engineer's duties and responsibilities as stated in General and Supplementary Conditions.

E. Regulation: The term "Regulations" includes laws, ordinances, statutes, and lawful orders issued by authorities having jurisdiction, as well as rules, conventions, and agreements within the construction industry that control performance of the Work.

F. Furnish: The term "furnish" is used to mean "supply and deliver to the Project site, ready for unloading, unpacking, assembly, installation, and similar operations."

G. Install: The term "install" is used to describe operations at project site including the actual "unloading, unpacking, assembly, erection, placing, anchoring, applying, working to dimension, finishing, curing, protecting, cleaning, and similar operations."

H. Provide: The term "provide" means "to furnish and install, complete and ready for the intended use."

I. Installer: An "Installer" is the Contractor or an entity engaged by the Contractor, either as an employee, subcontractor, or sub-subcontractor, for performance of a particular construction activity, including installation, erection, application, and similar operations. Installers are required to be experienced in the operations they are engaged to perform.

J. Substitutions: Requests for changes in products, materials, equipment, and methods of construction required by Contract Documents proposed by the Contractor after award of the Contract are considered requests for "substitutions."

2.03 INDUSTRY STANDARDS

A. Applicability of Standards: Except where the Contract Documents include more stringent requirements, applicable construction industry standards have the same force and effect as if bound or copied directly into the Contract Documents. Such standards are made a part of the Contract Documents by reference.

B. Publication Dates: Where the date of issue of a referenced standard is not specified, comply with the standard in effect as of date of Contract Documents.

C. Conflicting Requirements: Where compliance with two or more standards is specified, and the standards establish different or conflicting requirements for minimum quantities or quality levels,

refer requirements that are different, but apparently equal, and uncertainties to the Architect/Engineer for a decision before proceeding.

1. Minimum Quantity or Quality Levels: The quantity or quality level shown or specified shall be the minimum provided or performed. The actual installation may comply exactly with the minimum quantity or quality specified, or it may exceed the minimum within reasonable limits. In complying with these requirements, indicated numeric values are minimum or maximum, as appropriate for the context of the requirements. Refer uncertainties to the Architect/Engineer for a decision before proceeding.
2. Clarification methods: At the time of bidding, bidders shall familiarize themselves with the drawings and specifications. Any questions, misunderstandings, conflicts, deletions, discontinued products, catalog number discrepancies, discrepancies between the equipment supplied and the intent or function of the equipment, etc., shall be submitted to the Architect/Engineer in writing for clarification prior to issuance of the final addendum and bidding of the project. Where discrepancies or multiple interpretations occur, the most stringent (which is generally recognized as the most costly) that meets the intent of the documents shall be enforced.

D. Copies of Standards: Each entity engaged in construction on the Project is required to be familiar with industry standards applicable to that entity's construction activity. Copies of applicable standards are not bound with the Contract Documents, but can be obtained through the following addresses and telephone numbers:

1. ANSI American National Standards Institute
2. 11 West 42nd Street, 13th Floor
    a. (212) 642-3300
3. ASTM American Society for Testing and Materials
4. 1916 Race St.
    a. (215) 299-5400
5. EIA Electronic Industries Assoc.
6. 2001 Pennsylvania Ave., NW, Suite 1100
    a. (202) 457-4900
7. ETL ETL Testing Laboratories, Inc.
8. P.O. Box 2040
9. Route 11, Industrial Park
    a. (607) 753-6711
10. ICEA Insulated Cable Engineers
11. Association Inc.
12. P.O. Box 440
    a. (617) 394-4424
13. IEC International Electrotechnical Commission
14. (Available from ANSI)
15. 1430 Broadway
    a. (212) 354-3300
16. IEEE Institute of Electrical and Electronic Engineers
17. 345 E. 47th St.
    a. (212) 705-7900
18. NEC National Electric Code (Now NFPA)
19. NECA National Electrical Contractors Association
20. 7315 Wisconsin Ave., Suite 1300 W
    a. (301) 657-3110
21. NEMA National Electrical Manufacturers Association
22. 2101 L St., NW, Suite 300
    a. (202) 457-8400
23. NFPA National Fire Protection Association
24. One Batterymarch Park

25. PO Box 9101
    a. (617) 770-3000
26. UL Underwriters Laboratories
27. 333 Pfingsten Rd.
    a. (708) 272-8800
28. FS Federal Specification (from GSA)
29. Specifications Unit (WFSIS)
30. 7th and D St., SW
    a. (202) 708-9205

2.04 UNIT PRICES

A. General: A unit price is an amount proposed by Bidders and stated on the Bid Form as a price per unit of measurement for materials or services that will be added to or deducted from the Contract Sum by Change Order in the event the estimated quantities of Work required by the Contract Documents are increased or decreased. Include all necessary material, overhead, profit and applicable taxes. Comply with unit price requirements identified in individual Division 27 sections.

2.05 SUBMITTALS

A. Submit in accordance with Sections 013300, Submittal Procedures Shop Drawings, Product Data and Samples.

B. General: Follow the procedures specified in Division 27 Sections under "SUBMITTALS." As a minimum, all data shall be submitted as dictated in 013300 and labeled as to project, date, and installer. Include Installers' signature indicating his unqualified approval that the equipment will fit in the space shown, and is complete with all requirements of the plans and specifications. Provide space for "Action" marking. Do not proceed without appropriate "Action" marking. Allow 2 weeks for review.

C. Action Stamp: The Engineer will stamp each submittal with a uniform, self-explanatory action stamp. The stamp will be appropriately marked, as follows, to indicate the action taken:
   1. Final Unrestricted Release: Where submittals are marked "Approved," that part of the Work covered by the submittal may proceed provided it complies with requirements of the Contract Documents; final acceptance will depend upon that compliance.
   2. Final-But-Restricted Release: When submittals are marked "Approved as Noted," that part of the Work covered by the submittal may proceed provided it complies with notations or corrections on the submittal and requirements of the Contract Documents; final acceptance will depend on that compliance.
   3. Returned for Resubmittal: When submittal is marked "Not Approved, Revise and Resubmit," do not proceed with that part of the Work covered by the submittal, including purchasing, fabrication, delivery, or other activity. Revise or prepare a new submittal in accordance with the notations; resubmit without delay. Repeat if necessary to obtain a different action mark.
      a. Do not permit submittals marked "Not Approved, Revise and Resubmit" to be used at the Project site, or elsewhere where Work is in progress.
   4. Other Action: Where a submittal is primarily for information or record purposes, special processing or other activity, the submittal will be returned, marked "Action Not Required".
      a. SUBSTITUTIONS

D. Substitution Request Submittal: Requests for substitution may be considered or rejected at the discretion of the Architect, Engineer, Designer, and/or Owner. In addition to the below requirements, comply with Substitution Procedures Section 012500. As specified in Special Project Note #1, substitution requests to change equipment items from those identified in the Acceptable Types column in the Audio-Video Equipment List found in the accompanying drawings must be completed prior to bidding in compliance with the bidding schedule set forth by the project General Contractor.

1. Submit 3 copies of each request for substitution for consideration. Submit requests in the form and in accordance with procedures required for Change Order proposals.
2. Identify the product, or the fabrication or installation method to be replaced in each request. Include related Specification Section and Drawing numbers. Provide complete documentation showing compliance with the requirements for substitutions, and the following information, as appropriate:
    a. Product Data, including Drawings and descriptions of products, fabrication and installation procedures.
    b. Samples, where applicable or requested.
    c. A detailed comparison of significant qualities of the proposed substitution with those of the Work specified.
    d. Coordination information, including a list of changes or modifications needed to other parts of the Work and to construction performed by the Owner and other Contractors, that will become necessary to accommodate the proposed substitution.
    e. A statement indicating the substitution's effect on the Contractor's Construction Schedule compared to the schedule without approval of the substitution. Indicate the effect of the proposed substitution on overall Contract Time.
    f. Cost information, including a proposal of the net change, if any in the Contract Sum.
    g. Certification by the Contractor that the substitution proposed is equal-to or better in every significant respect to that required by the Contract Documents, and that it will perform adequately in the application indicated. Include the Contractor's waiver of rights to additional payment or time, that may subsequently become necessary because of the failure of the substitution to perform adequately.
    h. MATERIALS AND EQUIPMENT

E. Source Limitations: To the fullest extent possible, provide products of the same kind, from a single source where products are part of a single assembly.

F. Compatibility of Options: When the Contractor is given the option of selecting between two or more products for use on the Project, the product selected shall be compatible with products previously selected, even if previously selected products were also options.
    1. If a dispute arises between Contractors over concurrently selectable, but incompatible products, the Architect/Engineer will determine which products shall be retained and which are incompatible and must be replaced.

G. Manufacturers: Select equipment from the manufacturers as identified in the schedules contained in the drawings.
    a. SUMMARY TEST REPORT

H. Prepare summary test report in accordance with the requirements in each Division 27 Section. Make all tests required by the authorities having jurisdiction, by the Architect and his consultants, and the Owner. Make tests of the indicated installed conditions, and:
    1. Include tests from final punch list.
    2. If there are any abnormal conditions, they shall be brought to the attention of the Engineer in writing as a part of this submittal.
        a. WARRANTY REQUIREMENTS

I. Warranty for a minimum of one year after date of substantial completion all Technology systems equipment and workmanship. When a warranty call is requested by the owner, respond with an on-site service call within 24 hours of the initial call, regardless of if initial contact is made via installing company's personnel or through messaging services.

J. Disclaimers and Limitations: Manufacturer's disclaimers and limitations on product warranties do not relieve the Contractor of the warranty on the Work that incorporates the products, nor does it relieve suppliers, manufacturers, and subcontractors required to countersign special warranties with the Contractor.

K. Reinstatement of Warranty: When Work covered by a warranty has failed and been corrected by replacement of rebuilding, reinstate the warranty by written endorsement. The reinstated

warranty shall be equal to the original warranty.

L. Related Damages and Losses: When correcting warranted Work that has failed, remove and replace other Work that has been damaged as a result of such failure or that must be removed and replaced to provide access for correction of warranted Work.

M. Replacement Cost: Upon determination that Work covered by a warranty has failed, replace or rebuild the Work to an acceptable condition complying with requirements of Contract Documents. The Contractor is responsible for the cost of replacing or rebuilding defective Work regardless of whether the Owner has benefitted from use of the Work through a portion of its anticipated useful service life.

N. Owner's Recourse: Written warranties made to the Owner are in addition to implied warranties, and shall not limit the duties, obligations, rights and remedies otherwise available under the law, nor shall warranty periods be interpreted as limitations on time in which the Owner can enforce such other duties, obligations, rights, or remedies.
   1. Rejection of Warranties: The Owner reserves the right to reject warranties and to limit selections to products with warranties not in conflict with requirements of the Contract Documents.

O. The Owner reserves the right to refuse to accept Work for the Project where a special warranty, certification, or similar commitment is required on such Work or part of the Work, until evidence is presented that entities required to countersign such commitments are willing to do so.
   a. DELIVERY, STORAGE, AND HANDLING

P. Deliver products to the project properly identified with names, model numbers, types, grades, compliance labels, and other information needed for identification.
   a. PERMITS, FEES

Q. Obtain and pay all city, state, or local ordinance electrical permits and inspections before beginning construction.

R. Pay electric, telephone, and cable TV fees or reimbursable construction costs to the utilities in a timely manner so as not to delay construction.

PART 2 - PRODUCTS

3.01 PRODUCT SELECTION

A. General Product Requirements: Provide products that comply with the Contract Documents, that are undamaged and unused at the time of installation.
   1. Provide products complete with all accessories, trim, finish, safety guards and other devices and details needed for a complete installation and for the intended use and effect.
   2. Standard Products: Where available, provide standard products of types that have been produced and used successfully in similar situations on other projects.

B. Product Selection Procedures: Product selection is governed by the Contract Documents and governing regulations, not by previous Project experience. Procedures governing product selection include the following:
   1. Proprietary Specification Requirements: Where only a single product or manufacturer is named, provide the product indicated. No substitutions will be permitted.
   2. Compliance with Standards, Codes and Regulations: Where the Specifications only require compliance with an imposed code, standard or regulation, select a product that complies with the standards, codes or regulations specified.
   3. Visual Matching: Where Specifications require matching an established Sample, the Architect's decision will be final on whether a proposed product matches satisfactorily.
      a. Where no product available within the specified category matches satisfactorily and also complies with other specified requirements, comply with provisions of the Contract Documents concerning "substitutions" for selection of a matching product in another product category, or for noncompliance with specified requirements.
   4. Visual Selection: Where specified product requirements include the phrase "...as selected from manufacturer's standard colors, patterns, textures..." or a similar phrase, select a

product and manufacturer that complies with other specified requirements. The Architect will select the color, pattern and texture from the product line selected.

3.02 SUBSTITUTIONS

A. Conditions: A Contractor's substitution request will be received and considered by the Architect/Engineer when one or more of the following conditions are satisfied, as determined by the Architect/Engineer; otherwise requests will be returned without action except to record noncompliance with these requirements.
   1. Extensive revisions to Contract Documents are not required.
   2. Proposed changes are in keeping with the general intent of Contract Documents.
   3. The request is timely, fully documented and properly submitted. All substitution requests shall be received a minimum of two weeks prior to the bid opening.
      a. The request is directly related to an "or equal" clause or similar language in the Contract Documents.
   4. The specified product or method of construction cannot be provided within the Contract Time. The request will not be considered if the product or method cannot be provided as a result of failure to pursue the Work promptly or coordinate activities properly, or an unwillingness to pay special freight or factory charges to reduce the time of manufacturing.
   5. The specified product or method of construction cannot receive necessary approval by a governing authority, and the requested substitution can be approved.
   6. A substantial advantage is offered the Owner, in terms of cost, time, or other considerations of merit, after deducting offsetting responsibilities the Owner may be required to bear. Additional responsibilities for the Owner may include additional compensation to the Architect for redesign and evaluation services, increased cost of other construction by the Owner or separate Contractors, and similar considerations.
   7. The specified product or method of construction cannot be provided in a manner that is compatible with other materials, and where the Contractor certifies that the substitution will overcome the incompatibility.
   8. The specified product or method of construction cannot be coordinated with other materials, and where the Contractor certifies that the proposed substitution can be coordinated.
   9. The specified product or method of construction cannot provide a warranty required by the Contract Documents and where the Contractor certifies that the proposed substitution provide the required warranty.
      a. Where a proposed substitution involves more than one Contractor, each Contractor shall cooperate with the other Contractors involved to coordinate the Work, provide uniformity and consistency, and to assure compatibility of products.

PART 3 - EXECUTION

4.01 GENERAL INSTALLATION PROVISIONS

A. Inspection of Conditions: Require the Installer of each major component to inspect both the substrate and conditions under which Work is to be performed. Do not proceed until unsatisfactory conditions have been corrected in an acceptable manner.

B. Manufacturer's Instructions: Comply with manufacturer's installation instructions and recommendations, to the extent that those instructions and recommendations are more explicit or stringent than requirements contained in Contract Documents.

C. Inspect materials or equipment immediately upon delivery and again prior to installation. Reject damaged or defective items. Do not repair damaged or defective items. Replace all damaged or defective items with new items.

D. Provide attachment and connection devices and methods necessary for securing Work. Secure Work true to line and level. Allow for expansion and building movement.

E. Visual Effects: Provide uniform joint widths in exposed Work. Arrange joints in exposed Work to obtain the best visual effect. Refer questionable choices to the Architect for final decision.

F. Recheck measurements and dimensions, before starting each installation.

G. Install each component during weather conditions and Project status that will ensure the best possible results. Isolate each part of the completed construction from incompatible material as necessary to prevent deterioration.

H. Coordinate temporary enclosures with required inspections and tests, to minimize the necessity of uncovering completed construction for that purpose.

I. Mounting Heights: Where mounting heights are not indicated, install individual components at standard mounting heights recognized within the industry for the particular application indicated. Refer questionable mounting height decisions to the Architect for final decision.

J. Internet Access: The Owner will NOT provide internet access in the new building, or any other location for use by the AV installer during the installation.

4.02 CLEANING AND PROTECTION

A. During handling and installation, clean and protect construction in progress and adjoining materials in place. Apply protective covering where required to ensure protection from damage or deterioration at Substantial Completion.

B. Clean and maintain completed construction as frequently as necessary through the remainder of the construction period. Adjust and lubricate operable components to ensure operability without damaging effects.

C. Limiting Exposures: Supervise construction activities to ensure that no part of the construction, completed or in progress, is subject to harmful, dangerous, damaging, or otherwise deleterious exposure during the construction period.

4.03 PROJECT CLOSEOUT

A. General: Comply with final punch list requirements.

B. Operating and Maintenance Instructions: Arrange for each installer of equipment that requires regular maintenance to meet with the Owner's personnel to provide instruction in proper operation and maintenance. If installers are not experienced in procedures, provide instruction by manufacturer's representatives. Include a detailed review of the following items:
   1. Maintenance manuals.
   2. Record documents.
   3. Spare parts and materials.
   4. Tools.
   5. Identification systems.
   6. Control sequences.
   7. Hazards.
   8. Cleaning.
   9. Warranties and bonds.
   10. Maintenance agreements and similar continuing commitments.

C. Cleaning: Employ experienced workers or professional cleaners for final cleaning. Clean each surface or unit to the condition expected in a normal, commercial building cleaning and maintenance program. Comply with manufacturer's instructions.
   1. Complete the following cleaning operations before requesting inspection for Certification of Substantial Completion.
      a. Remove labels that are not permanent labels.
      b. Clean transparent materials. Replace chipped or broken lenses and other damaged transparent materials.
      c. Clean exposed exterior and interior hard-surfaced finishes to a dust-free condition, free of stains, films and similar foreign substances. Restore reflective surfaces to their original reflective condition.
      d. Wipe surfaces of all Technology equipment clean.

D. System Start Up: Provide a senior technician who is proficient with all specified systems, who is intimately familiar with this project, and who personally participated in the planning and installation of this project. Assign technician to be on site during the first 3 days of building occupancy from 7:00 a.m. to 4:00 p.m. Technician will work closely with the Owner's technical support personnel, and will assist the Owner with any and all needs relative to the newly installed audio, video and control systems. Tasks will include, but not be limited to, reports of technical problems, correction of malfunctioning systems, clarification of operating instructions, and assistance with help desk calls. Include all associated costs in the base bid for this project.

E. Occupancy Adjustments: When requested by the Owner or the A/V Consultant within one year of date of substantial completion, provide on-site assistance for any reason related to the audio, video and control system. Possible reasons for occupancy adjustments may include, but not be limited to changing levels; making minor programming changes to digital signal processors, control systems, or other similar devices; calibration of projectors; changing transformer taps, or adjusting controls to suit actual occupied conditions. Include three (3) occupancy adjustment trips to the site in the base bid for this project.

END OF SECTION 274100

This page intentionally left blank

SECTION 274101
– BASIC TECHNOLOGY SYSTEMS REQUIREMENTS

PART 1 - GENERAL

1.01 RELATED DOCUMENTS

A. Drawings and general provisions of Contract, including General and Supplementary Conditions apply to this section.

1.02 SUMMARY

A. This Section includes general administrative and procedural requirements for technology systems installations. The following administrative and procedural requirements are included in this Section:
   1. Submittals.
   2. Coordination drawings.
   3. Record documents.
   4. Maintenance manuals.
   5. Rough-ins.
   6. Technology systems installations.
   7. Cutting and patching.

B. Related Sections: All Division 27 sections contain requirements that relate to this section.

C. Related Sections: Several Division 26 sections contain requirements that relate to this section.

1.03 QUALITY ASSURANCE

A. Installer Qualifications: Engage an experienced Installer licensed for the work to be performed in the state and/or locality in which the work is performed. Licenses shall be carried at all times and shown upon request. Installer shall be a dully authorized representative of the manufacturer of technology systems equipment.

1.04 SUBMITTALS

A. Provide eight copies of submittals. One copy will be retained by the technology systems Consulting Engineer.
   1. Shop Drawings: 1 additional black-line prints.
   2. Product Data: 1 additional copy of each item.

B. Additional copies may be required by individual sections of these Specifications.

1.05 COORDINATION DRAWINGS

A. Prepare coordination drawings to a scale of 1/4"=1'-0" or larger; detailing major elements, components, and systems of technology systems equipment and materials in relationship with other systems, installations, and building components. Indicate locations where space is limited for installation and access and where sequencing and coordination of installations are of importance to the efficient flow of the Work, including (but not necessarily limited to) the following:
   1. Where deviations from contract documents are proposed, submit proposed changes prior to proceeding with the work.

1.06 RECORD DOCUMENTS

A. Prepare record documents in accordance with the requirements in Section 017839 Project Record Documents. Maintain during the course of construction a set of contract drawings and shop drawings in clean, undamaged condition, with mark-up of actual installations which vary substantially from the work originally shown. Mark with red erasable pencil. Mark-up new information which is recognized to be of importance to Owner, but was for some reason not shown the drawings. Give particular attention to concealed work, which would be difficult to measure and record at a later date. In addition to the requirements specified in Division 1, indicate installed conditions for:
   1. Redline changes or information from construction set.

2. Cable pathways, size and location.
3. Equipment locations.
4. Approved substitutions, Contract Modifications, and actual equipment and materials installed.

1.07 MAINTENANCE MANUALS

A. Prepare maintenance manuals in accordance with Division 1 Section "PROJECT CLOSEOUT"; however, in no case shall fewer than 3 maintenance manuals in three ring binders be provided. In addition to the requirements specified in Division 1, include the following information for equipment items:
   1. Description of function, normal operating characteristics and limitations, performance curves, engineering data and tests, and complete nomenclature and commercial numbers of replacement parts.
   2. Manufacturer's printed operating procedures to include start-up, break-in, and routine and normal operating instructions.
   3. Maintenance procedures for routine preventative maintenance and troubleshooting; disassembly, repair, and reassembly; aligning and adjusting instructions.
   4. Servicing instructions charts and schedules.

1.08 DELIVERY, STORAGE, AND HANDLING

A. Deliver products to the project properly identified with names, model numbers, types, grades, compliance labels, and other information needed for identification.

PART 2 - PRODUCTS (NOT APPLICABLE)

PART 3 - EXECUTION

3.01 ROUGH-IN

A. Since the drawings of floor and ceiling installations are made at a small scale, outlets, devices, equipment, etc., are indicated only in their approximate location. Do not scale technology systems drawings. Refer to the architectural and mechanical drawings and dimensions. Verify final locations for rough-ins with field measurements and with the requirements of the actual equipment to be connected.

B. Refer to equipment specifications in Divisions for rough-in requirements.

3.02 TECHNOLOGY SYSTEMS INSTALLATIONS

A. General: Sequence, coordinate, and integrate the various elements of technology systems, materials, and equipment. Comply with the following requirements:
   1. Coordinate technology systems, equipment, and materials installation with other building components.
   2. Verify all dimensions by field measurements.
   3. Arrange for chases, slots, and openings in other building components during progress of construction, to allow for technology systems installations.
   4. Coordinate the installation of required supporting devices and sleeves to be set in poured-in-place concrete and other structural components, as they are constructed.
   5. Sequence, coordinate, and integrate installations of technology systems materials and equipment for efficient flow of the Work. Give particular attention to large equipment.
   6. Where mounting heights are not detailed or dimensioned, install systems, materials, and equipment to provide the maximum headroom possible.
   7. Coordinate and obtain written approval from Owner's representative at least 7 days in advance for technology systems service interruption.
   8. Install systems, materials, and equipment to conform with approved submittal data, including coordination drawings, to greatest extent possible. Conform to arrangements indicated by the Contract Documents, recognizing that portions of the Work are shown only in diagrammatic form. Where coordination requirements conflict with individual system requirements, refer conflict to the Architect.

9. Install systems, materials, and equipment level and plumb, parallel and perpendicular to other building systems and components, where installed exposed in finished spaces.
    a. Install technology systems equipment to facilitate servicing, maintenance, and repair or replacement of equipment components. As much as practical, connect equipment for ease of disconnecting, with minimum of interference with other installations.
10. Install systems, materials, and equipment giving right-of-way priority to systems required to be installed at a specified slope.

3.03 CUTTING AND PATCHING

A. General: Perform cutting and patching where required to complete the technology systems installation. Perform cutting and patching in compliance with the following requirements:
    1. Perform cutting, fitting, and patching of technology systems equipment and materials required to:
        a. Uncover Work to provide for installation of ill-timed Work.
        b. Remove and replace defective Work.
        c. Remove and replace Work not conforming to requirements of the Contract Documents.
        d. Remove samples of installed Work as specified for testing.
        e. Install equipment and materials in existing structures.
        f. Upon written instructions from the Architect, uncover and restore Work to provide for Architect observation of concealed Work.
    2. Protect the structure, furnishings, finishes, and adjacent materials not indicated or scheduled to be removed.
    3. Provide and maintain temporary partitions or dust barriers adequate to prevent the spread of dust and dirt to adjacent areas.
    4. Protection of Installed Work: During cutting and patching operations, protect adjacent installations.
    5. Patch existing finished surfaces and building components using new materials matching existing materials and experienced Installers. Installers' qualifications refer to the materials and methods required for the surface and building components being patched.
        a. Refer to Division 1 Section "DEFINITIONS AND STANDARDS" for definition of experienced "Installer."
    6. Patch finished surfaces and building components using new materials specified for the original installation and experienced Installers. Installers' qualifications refer to the materials and methods required for the surface and building components being patched.
        a. Refer to Division 1 Section "DEFINITIONS AND STANDARDS" for definition of experienced "Installer."

3.04 FINAL PUNCH LIST

A. General: In addition to the requirements of Division 1 for substantial completion, include the following:
    1. Prerequisite personnel for technology systems final punch list:
        a. Technology systems project engineer must be present.
        b. Technology systems installer job foreman must be present.
            1) Additional personnel may be required by other sections of this specification.
    2. Other prerequisites for technology systems final punch list:
        a. List of incomplete items, value of incompletion, and reasons for being incomplete.
        b. Submit record drawings, record specifications, maintenance manuals, warranties, and summary test report.
        c. Deliver tools, spare parts, extra stocks of materials, and similar physical items to Owner. Provide delivery receipt signed by Owner's representative.
        d. Complete start-up testing of systems and instructions of Owner's operating/maintenance personnel.
        e. Clear access shall be provided to all devices and equipment.

f. Installer shall have pad and pencil to list all deficient items noted.
g. All corrections and adjustments shall be done after the inspection, not during. These items will appear on the final punch list.
h. Required keys for panels and doors.

3. Comply with other prerequisites as specified in other sections of the specification.

END OF SECTION 274101

SECTION 274102
– BASIC TECHNOLOGY SYSTEMS MATERIALS AND METHODS

PART 1 - GENERAL

1.01 SUMMARY

A. This Section includes limited scope general construction materials and methods for application with technology systems installations as follows:
   1. Selective demolition including:
      a. Nondestructive removal of materials and equipment for reuse or salvage as indicated.
      b. Dismantling technology systems materials and equipment made obsolete by these installations.
   2. Miscellaneous metals for support of technology systems materials and equipment.
   3. Wood grounds, nailers, blocking, fasteners, and anchorage for support of technology systems materials and equipment.
   4. Joint sealers for sealing around technology systems materials and equipment; and for sealing penetrations in fire and smoke barriers, floors, and foundation walls.
   5. Access panels and doors in walls, ceilings, and floors for access to technology systems materials and equipment.
   6. Painting of technology systems materials and equipment.

1.02 RELATED DOCUMENTS

A. Drawings and general provisions of Contract, including General and Supplementary Conditions and Division 1 Specification Sections, apply to this Section.

B. Requirements specified in Division 27 Section "Basic technology systems Requirements" apply to this Section.

1.03 SUBMITTALS

A. Submit in accordance with Sections 013310, Submittal Procedures, and 013323, Shop Drawings, Product Data Samples.

B. General: Submit the following in accordance with Conditions of Contract and Division 1 Specification Sections.

C. Product data for the following products:
   1. Joint sealers.

D. Shop drawings detailing fabrication and installation for metal fabrications, and wood supports and anchorage for technology systems materials and equipment.

E. Schedules indicating proposed methods and sequence of operations for selective demolition prior to commencement of Work. Include coordination for shut-off of technology systems service, and details for dust and noise control.
   1. Coordinate sequencing with construction phasing and Owner occupancy specified in Division 1 Section "Summary of Work."
   2. Submit shop drawings indicating technology systems modifications to existing systems.

1.04 QUALITY ASSURANCE

A. Installer Qualifications: Engage an experienced installer for the installation. Refer to section 27 41 16.00 for definition of an experienced installer.

B. Fire-Resistance Ratings: Where a fire-resistance classification is indicated, provide UL listed assemblies to maintain specified rating where technology systems or technology systems components penetrate rated assemblies. Refer to manufacturers listed in the UL "Building Materials Directory" for rating shown. Products include, but are not limited to:
   1. Access doors.
   2. Conduit penetrations.
   3. Communication outlets.

1.05 DELIVERY, STORAGE, AND HANDLING

A. Deliver joint sealer materials in original unopened containers or bundles with labels informing about manufacturer, product name and designation, color, expiration period for use, pot life, curing time, and mixing instructions for multi-component materials.

B. Store and handle joint sealer materials in compliance with the manufacturers' recommendations to prevent their deterioration and damage.

1.06 PROJECT CONDITIONS

A. Conditions Affecting Selective Demolition: The following project conditions apply:
   1. Protect adjacent materials indicated to remain. Install and maintain dust and noise barriers to keep dirt, dust, and noise from being transmitted to adjacent areas. Remove protection and barriers after demolition operations are complete.
   2. Locate, identify, and protect technology systems services passing through demolition area and serving other areas outside the demolition limits. Maintain services to areas outside demolition limits. When services must be interrupted, install temporary services for affected areas.

B. Environmental Conditions: Apply joint sealers under temperature and humidity conditions within the limits permitted by the joint sealer manufacturer. Do no apply joint sealers to wet substrates.

1.07 SEQUENCE AND SCHEDULING

A. Coordinate the shut-off and disconnection of technology systems service with the Owner.

B. Notify the Architect at least 5 days prior to commencing demolition operations.

C. Perform demolition in phases as indicated.

1.08 PAINTING

A. Paint exposed surfaces whether or not colors are designated in "schedules," except where a surface or material is specifically indicated not to be painted or is to remain natural. Where an item or surface is not specifically mentioned, paint the same as similar adjacent materials or surfaces. If color or finish is not designated, the Architect will select from standard colors or finishes available.
   1. Painting includes field painting hangers, exposed steel and iron work, and primed metal surfaces of technology systems equipment.

PART 2 - PRODUCTS

2.01 MISCELLANEOUS METALS

A. Steel plates, shapes, bars, and bar grating: ASTM A 36.

B. Cold-Formed Steel Tubing: ASTM A 500.

C. Hot-Rolled Steel Tubing: ASTM A 501.

D. Steel Pipe: ASTM A 53, Schedule 40, welded.

E. Nonshrink, Nonmetallic Grout: Premixed, factory-packaged, nonstaining, noncorrosive, nongaseous grout, recommended for interior and exterior applications.

F. Fasteners: Zinc-coated, type, grade, and class as required.

2.02 MISCELLANEOUS LUMBER

A. Framing Materials: Standard Grade, light-framing-size lumber of any species. Number 3 Common or Standard Grade boards complying with WCLIB or AWPA rules, or Number 3 boards complying with SPIB rules. Lumber shall be preservative treated in accordance with AWPB LP-2, and kiln dried to a moisture content of not more than 19 percent.

B. Construction Panels: Plywood panels; APA C-D PLUGGED INT, with exterior glue; thickness as indicated, or if not indicated, not less that 3/4 inches (19.05 mm) and painted with suitable fire rated paint material where required.

2.03 JOINT SEALERS

A. General: Joint sealers, joint fillers, and other related materials compatible with each other and with joint substrates under conditions of service and application.

B. Colors: As selected by the Architect from manufacturer's standard colors.

C. Fire-Resistant Joint Sealers: Two-part, foamed-in-place, silicone sealant formulated for use in through-penetration fire-stopping around cables, conduit, pipes, and duct penetrations through fire- rated walls and floors. Sealants and accessories shall have fire- resistance ratings indicated, as established by testing identical assemblies in accordance with ASTM E 814, by Underwriters' Laboratories, Inc., or other testing and inspection agency acceptable to authorities having jurisdiction.

2.04 MANUFACTURERS: SUBJECT TO COMPLIANCE WITH REQUIREMENTS, PROVIDE PRODUCTS BY ONE OF THE FOLLOWING:

1. Bar-Co., Inc.
2. J.L. Industries.
3. Karp Associates, Inc.
4. Milcor Div. Inryco, Inc.
5. Nystrom, Inc.

PART 3 - EXECUTION

3.01 EXAMINATION

A. Examine substrates, areas, and conditions, with Installer present, for compliance with requirements for installation tolerances and other conditions affecting installation and application of joint sealers and access panels. Do not proceed with installation until unsatisfactory conditions have been corrected.

3.02 PREPARATION FOR JOINT SEALERS

A. Surface Cleaning for Joint Sealers: Clean surfaces of joints immediately before applying joint sealers to comply with recommendations of joint sealer manufacturer.

B. Apply joint sealer primer to substrates as recommended by joint sealer manufacturer. Protect adjacent areas from spillage and migration of primers, using masking tape. Remove tape immediately after tooling without disturbing joint seal.

3.03 SELECTIVE DEMOLITION

A. All obsolete technology systems equipment shall remain the property of the owner.

B. General: Demolish, remove, de-mount, and disconnect abandoned technology systems materials. Coordinate with other work, including technology systems wiring work, as necessary to interface installation of existing equipment with other work. New technology systems equipment and apparatus shall be coordinated and connected into the existing systems. Relocate existing technology systems devices, conduit and/or equipment that for any reason obstructs construction. All technology systems equipment and apparatus in the building not remodeled shall be connected and remain in working condition. Include any equipment having technology systems connections that requires disconnecting and re-connection at the same or another location throughout the course of construction.

C. Disposal and Cleanup: Remove from the site and legally dispose of demolished materials and equipment.

3.04 ERECTION OF METAL SUPPORTS AND ANCHORAGE

A. Cut, fit, and place miscellaneous metal fabrications accurately in location, alignment, and elevation to support and anchor technology systems materials and equipment.

B. Field Welding: Comply with AWS "Structural Welding Code."

3.05 ERECTION OF WOOD SUPPORTS AND ANCHORAGE

A. Cut, fit, and place wood grounds, nailers, blocking, and anchorage accurately in location, alignment, and elevation to support and anchor technology systems materials and equipment.

B. Select fastener sizes that will not penetrate members where opposite side will be exposed to view or will receive finish materials. Make tight connections between members. Install fasteners without splitting wood members.

C. Attach to substrates as required to support applied loads.

D. Install 4' X 8' X 3/4" plywood terminal boards in enclosures or mounted on walls where indicated in the drawings.

3.06 SEISMIC BRACING

A. General: Provide vibration isolators, flexible connections, rigid steel frames, concrete inertia bases, anchors, inserts, hangers, and attachments, seismic bracing and snubbers as required for seismic control and prevention of the transmission of vibration for both isolated and non-isolated systems. Comply with seismic requirements for the proper seismic zone for all support systems. Comply with sections 014100 and 274548.

1. Vibration isolated equipment shall be mounted on rigid steel frames or concrete bases. Each spring mounted base shall have a minimum of four all directional seismic snubbers that are double acting and located as close to the vibration isolators as possible to facilitate attachment both to the base and the structure. The snubbers shall consist of interlocking steel members restrained by shock absorbent rubber materials compounded to bridge bearing specifications.
2. Non-isolated equipment shall be installed according to UBC Sec. 2312 (g); Cp Factor Table 23J, I Factor Table 23K.4.C In addition, the vertical forces restrain requirements shall be computed as the ½ the value of the horizontal forces.

3.07 APPLICATION OF JOINT SEALERS

A. General: Comply with joint sealer manufacturers' printed application instructions applicable to products and applications indicated, except where more stringent requirements apply.

1. Comply with recommendations of ASTM C 962 for use of elastomeric joint sealants.
2. Comply with recommendations of ASTM C 790 for use of acrylic- emulsion joint sealants.

B. Tooling: Immediately after sealant application and prior to time shinning or curing begins, tool sealants to form smooth, uniform beads; to eliminate air pockets; and to ensure contact and adhesion of sealant with sides of joint. Remove excess sealants from surfaces adjacent to joint. Do not use tooling agents that discolor sealants or adjacent surfaces or are not approved by sealant manufacturer.

C. Installation of Fire-Stopping Sealant: Install sealant, including forming, packing, and other accessory materials, to fill openings around technology systems services penetrating floors and walls, to provide fire-stops with fire-resistance ratings indicated for floor or wall assembly in which penetration occurs. Comply with installation requirements established by testing and inspecting agency.

END OF SECTION 274102

SECTION 274113
– AUDIO SYSTEMS

PART 1 GENERAL

1.01 REFERENCE STANDARDS

A. NFPA 70 - National Electrical Code; Most Recent Edition Adopted by Authority Having Jurisdiction, Including All Applicable Amendments and Supplements.

B. UL 50 - Enclosures for Electrical Equipment, Non-Environmental Considerations; Current Edition, Including All Revisions.

1.02 SUMMARY

A. The audio system will provide for voice amplification and media device audio program amplification. Media device audio program and voice audio amplification will originate from various media sources and microphones, be switched through a source selection switcher, and/or be mixed, processed and amplified to the speaker system. In addition provide multi-channel audio routing between all processors.

B. This Section includes requirements for audio system components including, but not limited to, the following:
   1. Microphones
   2. Mixers
   3. Power Amplifiers
   4. Cabinets
   5. Racks
   6. Loudspeaker Systems
   7. Microphone Inputs
   8. Processors
   9. Combiners
   10. Source Devices
   11. Digital Signal Processors
   12. Telephone System Interfaces
   13. Wire, Cable, and Connectors

1.03 RELATED DOCUMENTS

A. Drawings and general provisions of the Contract, including General and Supplementary Conditions and Division 1 Specification Sections, apply to this Section.

B. Related Sections: The following Division 27 sections contain requirements that relate to this section:
   1. General Technology Systems Requirements
   2. Basic Technology Systems Requirements
   3. Basic Technology Systems Materials and Methods
   4. Video Systems

C. Related Sections: Several sections of Division 26 contain requirements that relate to this section.

1.04 SYSTEM DESCRIPTION

A. General: The audio systems shall be a complete systems for amplifying sound signals from microphones and media source equipment and distributing them to loudspeakers at various locations.

B. Functional Performance: Components and system features and functions shall include, but are not limited to, the following:
   1. Meet the following performance parameters as measured in 1/3 octave bands:
      a. From 100 Hz to 2kHz, flat within plus or minus 2dB.
      b. Above 2kHz, slope down along an approximate 3dB octave slope to 8kHz.

2. Sound pressure levels at 2kHz octave band shall not deviate more than plus or minus 2dB.
3. When driven to maximum output, clipping shall first occur in power amplifiers.
4. No noise, hum, RFI pickup or distortion shall be audible under normal operating conditions.
5. Sound system shall reproduce program material at a level of 90 dBA without audible distortion.

1.05 SUBMITTALS

A. Submit in accordance with Sections 013310, Submittal Procedures, and 013323, Shop Drawings, Product Data and Samples.

B. General: Submit the following in accordance with Conditions of Contract and Division 1 Specification Sections:
   1. Product data for each type of product specified.
   2. Shop drawings detailing audio system including, but not limited to the following:
      a. Connection panels.
      b. Rack elevations showing component arrangement inside equipment racks.
      c. Complete layouts of all DSP devices. Including but not limited to audio routing, control, logic, level control, etc...
   3. Wiring Diagrams detailing wiring for power, signal, and control. Provide actual hook-up drawings showing the connection point of each conductor. Single line drawings will not be accepted. Include all cable labeling on wiring diagrams. Identify terminal numbers and wiring color codes to facilitate installation, operation, and maintenance.
   4. Maintenance data for materials and products, for inclusion in Operating and Maintenance Manual specified in Division 1 and Division 27 Section "Basic A/V System Requirements." Provide complete operations and maintenance manual material concurrently with system submittal and provide updated final versions of manuals one month before completion of construction and final system turnover. Include the following:
      a. Equipment list showing quantity, make, model, and serial number.
      b. System operating instructions.
      c. System maintenance instructions.
   5. Proposed DSP configuration showing individual processor blocks with block resources identified, and signal flow.
   6. Wiring codes for all system cable. (See "labeling", this section).
   7. Proposed labeling for system components. (See "labeling", this section).
   8. All special submittal instructions indicated on supplied design drawings.

1.06 QUALITY ASSURANCE

A. Manufacturer's Qualifications: Firms regularly engaged in manufacture of sound system, components and accessories, of types, capacities and characteristics required, whose products have been in satisfactory use in similar service for not less than 5 years.

B. Installer's Qualifications: Firms with at least 5 years of successful installation experience of A/V system projects similar to that required for this project. In addition, installers must have successfully completed a minimum of 3 similar installations over a period of 2 years prior to the date of the bid opening for this project. System installations must have included similar automatic mixers, matrices, digital signal processors, and echo canceller hardware and software. To qualify as similar, audio systems must have included complete installation, set up, programming, balancing, and equalization of automatic mixers, matrix routers, echo cancelers, and digital signal processors. All such installation, set up, programming, balancing, and equalization work must have been completed by a factory trained and certified technician of the specified mixer, matrix, echo canceler, and digital audio processor manufacturer. The certified technician must have successfully completed all relevant training courses recommended by the manufacturers of the above referenced equipment for proficiency in these skill sets. In addition, the certified technician must have been, and now be, a direct employee of the installer, in a

permanent office staffed with factory qualified technicians, working for a minimum of 40 hours per week as a direct employee of the installer. The certified technician and factory trained installers must be the direct employees of the installer; sub-contracted, third party maintenance agreements, or similar arrangements are expressly prohibited, and do not qualify. Upon request, submit evidence of such qualifications to the Designer/Engineer. All of the above requirements must be complied with prior to the bid opening for this project.

C. Crestron Digital Media Training: Installer shall have on staff a Crestron DMC-E and shall have a Crestron DMC-T certified technician on site during the installation of all Creston DM devices.

D. Electrical Component Standard: Provide work complying with applicable requirements of NFPA 70 "National Electrical Code."

E. EIA Compliance: Comply with the following Technology Industries Association Standards:
   1. Sound Systems, EIA-160.
   2. Loudspeaker, Dynamic Magnetic Structures, and Impedance, EIA-299-A.
   3. Racks, Panels, and Associated Equipment, EIA-310-A.
   4. Amplifiers for Sound Equipment, SE-101-A.
   5. Speakers for Sound Equipment, SE-103.
   6. Microphones for Sound Equipment, SE-105.

F. UL Compliance: Comply with requirements of UL 50.

G. All installation practices shall be in accordance with, but not limited to, these specifications and drawings. Installation shall be performed in accordance with the applicable standards, requirements, and recommendations of the Uniform Building Code, the National Electrical Code and all local authorities having jurisdiction. All installation work shall follow "standard broadcast wiring" and installation practices, as excerpted from "Recommended Wiring Practices," Sound System Engineering, (2nd Edition), D. Davis, and performed to the highest standards of acknowledged industry practices.

1.07 DELIVERY, STORAGE, AND HANDLING

A. Deliver products in factory containers. Store in clean, dry space in original containers. Protect products from fumes and construction traffic. Handle carefully to avoid damage.

1.08 WARRANTY REQUIREMENTS

A. Audio system shall be subject to warranty requirements as stated in section 27 41 16.00.

PART 2 PRODUCTS

2.01 MANUFACTURERS

A. Manufacturers: Subject to compliance with requirements, provide products by those manufacturers identified in the equipment list. Firms regularly engaged in manufacture of sound system components and accessories, of types, capacities and characteristics required, whose products have been in satisfactory use in similar service for not less than 5 years.

B. All equipment and material shall be new, and must have been commercially available for at least one year prior to bid.

C. All equipment must be UL listed or built to UL standards.

2.02 SYSTEM REQUIREMENTS

A. General: Provide complete and fully functional audio systems using materials and equipment of types, sizes, ratings, and performances as indicated in the equipment list in the accompanying drawings. Use materials and equipment that comply with referenced standards and manufacturers' standard design and construction in accordance with published product information. Coordinate the features of materials and equipment so they form an integrated system with components and interconnections matched for optimum performance of specified functions.

B. Provide all wire, cable, and connectors as required to complete the installation of all systems as designed and specified.

2.03 EQUIPMENT AND MATERIALS

A. General: Provide equipment selected from equipment list on drawings, or as substituted following the proscribed substitution process, using all solid-state components fully rated for continuous duty at the ratings indicated or specified. Select equipment for normal operation on input power supplied at 105-130 V, 60 Hz.

PART 3 EXECUTION

3.01 EXAMINATION

A. Examine conditions for compliance with requirements and other conditions affecting the performance of the Audio System work.

B. Do not proceed until unsatisfactory conditions have been corrected.

3.02 INSTALLATION

A. General: Install system in accordance with NFPA 70 and other applicable codes. Install equipment in accordance with manufacturer's written instructions.

B. All equipment shall be firmly secured in place unless requirements of portability dictate otherwise. Fastenings and supports shall be adequate to support their loads with a safety factor of at least three times the weight of the equipment being installed. Any structural mounting that is not able to meet this requirement due to the specific nature of the equipment, manufacturer's requirements or limitations of the facility, shall not be installed without prior approval of the Engineer. Install all boxes, equipment, hardware, and other materials plumb, level, and square.

C. Install all technology equipment and support equipment in podium, and the other millwork in a neat and cosmetically dressed-out manner. All saw cuts, holes and recesses into laminates and woodwork shall be straight, all radius and circular cuts shall be consistent, and all uneven surfaces shall be corrected. This shall include the use of moldings, grommets, bushings, laminates, and wood products as required to dress out the installation of equipment. Assure that the installation of equipment and panels in the technology racks and podiums are completed by using matching screws, hardware and grommets.

D. Speakers:
   1. Confirm polarity of speaker before installation and wire to maintain uniform polarity.
   2. Mount transformers with screws securely to speaker brackets or enclosures.
   3. Neatly mount speaker grilles, panels, connector plates, control panels, etc., tight, plumb, and square unless indicated otherwise on drawings.
   4. Provide brackets, screws, adapters, springs, rack mounting kits, etc., recommended by manufacturer for correct assembly and installation of speaker assemblies and technology components.
   5. Make speaker cable connections with rosin core solder or wire nut or equivalent connections.
   6. Loosely but completely fill speaker back boxes that do not have fiberglass installed with fiberglass.
   7. Seal cone speakers to backbox so air will not pass from one side of speaker to another.
   8. Securely mount theater style speaker systems to custom wall mount brackets as detailed in the supplied design drawings. Comply with applicable seismic codes and requirements.

E. Technology:
   1. Assure sufficient ventilation for adequate cooling of equipment.
   2. Mount amplifiers at top of equipment cabinet. Install vent rack panels in unused spaces. Install vent panels at top and bottom and above each power amplifier.
   3. Securely fasten equipment plumb and square in place. Where equipment is installed in rack cabinets, utilize all fastening holes and cover open spaces with perforated panels.
   4. Securely fasten relays and small components. Do not use sticky-back tape for fasteners.

5. Install balancing transformer on each unbalanced input or output that connects to device outside equipment cabinet, or that connects to balanced input or output within equipment cabinet.
6. Connect powered components to 120 VAC outlets on transient voltage surge suppressors. Do not connect to outlets on other components.
7. Leave sufficient service loops of uniform length on cables to allow operation of system with chassis outside cabinet.
8. All equipment shall be held firmly in place with proper types of mounting hardware as recommended and/or supplied by the manufacturer. All mounting hardware provided with equipment shall be used when practical. This shall include, but not be limited to, front and rear rack rails, angle brackets and rack mount kits. All equipment shall be installed so as to provide reasonable safety to the operator.

F. Cable, Wire, and Connectors:
1. All cable and wire shall be new and unspliced. Splicing of cables and conductors is expressly prohibited in any location other than the equipment racks. Splicing of audio and video cables will not be allowed in any location. Splicing of control conductors shall be accomplished via punch block or terminal strip connections only.
2. Additional cable length shall be provided at all connector locations. Duplex box, junction box, and floor box locations shall be installed with sufficient cable length behind cover plates to permit wiring maintenance and connector replacement in the future.
3. When cable runs utilize the vertical cable raceways located within walls, the acoustic integrity of the walls shall be maintained. All cables that pass through cover plates of junction boxes and raceways, through slab-to-slab walls, and through conduit lines shall be properly gasketted and sealed and all acoustic material shall be restored or replaced.
4. Separation between system cables and all other services shall be maximized to prevent and/or minimize the potential for electro-magnetic interference (EMI). Particular care shall be taken to ensure at least a 12" separation from electrical lines whenever feasible. At points where separation is unavoidable, distribution cables shall cross other services at right angles whenever practical to minimize EMI.
5. Cables shall be installed in a manner that shall ensure no signal cables are placed on top of any lighting fixtures, ceiling speakers, video projector lifts, projection screens, HVAC controls or sensing devices, fire safety and sprinkler system detection technology, or any other technology or mechanical equipment.
6. No cables shall be laid directly on top of T-bar grid ceiling tiles. Support cables installed outside of conduit at a maximum of four foot intervals from the building structure. Do not utilize support wires from other trades or systems.
7. System cables shall be installed in a manner that will not block access to other equipment or services, across removable service panels and/or in any other manner to prohibit routine maintenance of HVAC systems, fire safety equipment and building mechanical control systems.
8. All exposed conductors inside of equipment racks shall be dressed with heavy duty neoprene heat-shrink tubing.
9. All inter-rack cabling shall be neatly laced, dressed, strain relieved and adequately supported.
10. After completion of wiring and cable installation, all trough and box covers shall be notched out and grommetted for clearance of the various cable bundles, (i.e., separate audio, video, and control). These panel covers shall be screwed back in place and all gaskets shall be restored or replaced.
11. Do not place any wires and cables for this system in any conduit, raceway, wire way or cable tray that is used for the mechanical systems of the building.
12. Provide connectors of the type and quality as detailed in this contract, and/or as required to meet the minimum bandwidth requirements of the equipment to which the connectors are terminated. The overall quantity of connectors shall not be limited by the quantities indicated in the drawings and shall be provided as required.

13. No connectors shall be installed in non-accessible locations or used for splicing cables. All connectors shall be new.
14. All connectors shall incorporate strain relief mechanisms which firmly grip the jacket of connected cables. All connectors shall be properly polarized to prevent improper seating. Connectors shall provide appropriate electrical characteristics for the circuitry to which they are attached.
15. All inner-rack cables shall be grouped according to the signals being carried to reduce signal contamination. Separate groups shall be formed for the following:
    a. Power
    b. Control
    c. Video
    d. Audio cables carrying signals less than -20 dBM.
    e. Audio cables carrying signals between -20 dBM and +20 dBM.
    f. Audio cables carrying signals over +20 dBM.
16. Route all cable and wiring within equipment racks, cabinets and millwork according to function, separating wires of different signal levels (microphone, line level, amplifier output, AC, control, etc.) by as much distance as possible. Neatly arrange, harness and bundle all cable with nylon U/V rated ties.
17. As a general practice, all power cables, control cables, and high level cables shall be run on the left side of equipment racks as viewed from the rear. All other cables shall be run on the right side of all equipment racks as viewed from the rear.
18. All cables, except video cables which must be cut to an electrical length, shall be cut to the length dictated by the cable run.
19. Terminal blocks, boards, strips or connectors, shall be furnished by the installer for all cables which interface with racks, cabinets, consoles, or equipment modules. Affix terminal blocks, boards, strips or connectors to equipment racks using screws only. Double sided tape will not be accepted.
20. Comply with industry standard circuit polarity and loudspeaker wiring polarity. No cables shall be terminated with a polarity reversal between connectors at either end.
21. All system wire, after being cut and stripped, shall have the wire strands twisted back to their original lay and be terminated by approved soldered or mechanical means. No bare wire ends shall be accepted.
22. Heat-shrink type tubing shall be used to insulate and dress the ends of all wire and cables including a separate tube for the ground or drain wire.
23. All solder connections shall be made with rosin-core solder. Temperature controlled soldering irons rated at least 60 watts shall be used for all soldering work. No soldering guns, gas or butane, or temperature unregulated irons shall be used on the job site.
24. All mechanical connections shall be made with approved crimp lugs of the correct size and type for the connection. Wire nuts shall not be permitted except inside speaker enclosures. Each connector shall be attached with the proper size controlled-duty-cycle ratcheting crimp tool which has been approved by the manufacturer of the connectors.
25. Conventional non-ratcheting type crimping tools are unacceptable, and shall not be used on the job site. The presence of such tools on the job site shall constitute evidence of mechanical connections made with unauthorized tools and shall provide sufficient grounds for rejection of all mechanical connections in the system, and the subsequent re-work of same.
26. Shields for audio cables shall be grounded at the input end only, of the various equipment items on the system to prevent potential for ground loops.
27. Where AV cable is installed in areas that are exposed to the view of end users, install AV cable and associated power cables inside nylon braided sleeving (wire loom). Examples of such areas include, but are not limited to cables installed to projectors and monitors, and cables installed to devices in/on lecterns such as touch panels and document cameras. Where security cables are specified for physical security to such devices, install

the specified security cables inside the nylon braided sleeving along with the AV cables.

G. Identification and Labeling:
   1. All cables, regardless of length, shall be identified with a machine-printed wrap-around labeling system at both ends. These labels shall be self laminating to ensure durability. The label format used shall be equal, or better than, the system detailed.
   2. There shall be no unmarked cables any place in the system.
   3. Marking codes used on cables shall correspond to codes provided with submittals, and/or the written documentation of the "as built" drawings.
   4. All connectors, controls, equipment components, terminal blocks and equipment racks are to be permanently labeled in a format approved during the submittal process.
   5. All equipment labels are to be permanently engraved in metal. Any alternative method shall be approved during the submittal process.
   6. Clearly and permanently label all jacks, controls, connections, and so forth. Embossed or printed label tape shall not be used and is considered unacceptable for this system. Attach labels with double stick tape as required.
   7. All labeling shall be completed prior to acceptance of the final system.

H. Repairs: Wherever walls, ceilings, floors, or other building finishes are cut for installation, or accidentally marred during installation, repair, restore, and refinish to original appearance.

3.03 GROUNDING

A. Provide equipment grounding connections for audio system as indicated. Tighten connections to comply with tightening torques specified in UL Standard 486A to assure permanent and effective grounds.

B. Ground equipment, conductor, and cable shields to eliminate shock hazard and to eliminate ground loops, common mode returns, noise pickup, cross talk, and other impairments. Provide 5-ohm ground at main equipment location. Measure, record, and report ground resistance.

C. Provide one #6 ground conductor with green insulation between all equipment racks and the main electrical panel ground bus. Connect at each end.

3.04 FIELD QUALITY CONTROL

A. Manufacturer's Field Services: Provide services of a factory authorized service representative to supervise the field assembly and connection of components and the pretesting, testing, and adjustment of the system.

B. Pretesting: Upon completing installation of the system, align, adjust, and balance the system and perform complete pretesting. Determine, through pretesting, the conformance of the system to the requirements of the Drawings and Specifications. Correct deficiencies observed in pretesting. Replace malfunctioning or damaged items with new, and retest until materials satisfactory performance and conditions are achieved.

C. Balance and Equalization: Perform the final balance and equalization. Comply with the equalization requirements stated above.

D. Designer/Engineer Final Review:
   1. Contractor shall assist Designer/Engineer in performing the final review, and spot checking the balance and equalization.
   2. Coordinate final inspection schedule with Designer/Engineer two weeks minimum prior to Consultant's final inspection.
   3. Have copy of red-lined as-built documents available at time of inspection.
   4. Have loose equipment (microphones, cables, etc) available at time of inspection.
   5. Assist Sound/Acoustic Consultant in final inspection of completed system.
   6. Provide the following test equipment in good working order:
      a. Battery operated hand-held 1/3 octave real-time audio spectrum analyzer with SPL meter and precision microphone.
      b. Digitally generated random pick noise generator, 20Hz-20kHz, minimum 2 hr repetition rate.

c. Direct reading audio impedance meter, minimum 3 frequencies, 10% accuracy.
d. Digital Volt-Ohmmeter.
e. Audio oscillator, variable frequency, 20Hz-20kHz.
f. Battery operated oscilloscope, 1 MHz minimum bandwidth.
g. Necessary charger, cables, test leads, adapter, power strip, etc, for test equipment.

7. Correct minor items so Designer/Engineer may certify satisfactory completion during his visit.
8. Pay Designer/Engineer's additional fees and expenses if building or systems have not been completed properly or sufficiently, requiring Designer/Engineer to make subsequent visits to balance, equalize, inspect, or certify completion.

3.05 COMMISSIONING

A. Train Owner's maintenance personnel in the procedures and schedules involved in operating, troubleshooting, servicing, and preventative maintenance of the system. Comply with the requirements identified in section 27 41 16.00, project closeout.

B. Train Owner's non-technical users, and technical support personnel in the procedures and schedules involved in operating, troubleshooting, servicing, and preventative maintenance of the system. Provide a minimum of 4 hours training on two non-consecutive days (8 hours total). Provide training on days when training sessions are not provided to comply with the training requirements specified in other related sections. Include separate training sessions for non-technical users and for technical support personnel. Have ready, and refer to, all project documentation including, but not limited to, operating and maintenance instructions and As-built drawings. Allow the Owner to record any or all training sessions using audio and/or video recording equipment at their discretion.

C. Schedule training with Owner through the Architect, with at least 21 days advance notice.

3.06 CLEANING AND PROTECTION

A. Prior to final acceptance, clean system components and protect from damage and deterioration.

END OF SECTION 274113

SECTION 274114
– VIDEO SYSTEMS

PART 1 GENERAL

1.01 REFERENCE STANDARDS

A. NFPA 70 - National Electrical Code; Most Recent Edition Adopted by Authority Having Jurisdiction, Including All Applicable Amendments and Supplements.

1.02 SUMMARY

A. The video systems will provide for monitor display of multiple video sources in multiple video resolutions and formats. Video signals will originate in media devices, be processed, selected and displayed.

B. This Section includes requirements for video system components including, but not limited to, the following:
   1. Switchers
   2. Matrix Switchers
   3. Computer Interfaces
   4. Various Media Source Devices
   5. Scalers
   6. Distribution Amplifiers
   7. Monitors
   8. Video Distribution Systems
   9. Racks
   10. Wire, Cable, and Connectors

1.03 RELATED DOCUMENTS

A. Drawings and general provisions of Contract, including General and Supplementary Conditions apply to this Section.

B. Related Sections: The following Division 27 sections contain requirements that relate to this section:
   1. General Technology Systems Requirements
   2. Basic Technology Systems Requirements
   3. Basic Technology Systems Materials and Methods
   4. Audio Systems
   5. Control Systems

C. Related Sections: Several sections of Division 26 contain requirements that relate to this section.

1.04 SYSTEM DESCRIPTION

A. General: The video systems shall be complete and fully functioning systems for the selection, processing, distribution, and display of video signals on multiple types and sizes of monitors.

B. Video Functional Performance: Components and system features and functions shall include, but not be limited to:
   1. Switching, processing, routing, distribution, and display of any video, data, or graphic signal up to and including native resolutions of 1920 x 1200.
   2. Switching, processing, routing, distribution, and display of the specified video signal input formats include, but are not limited to composite video, component video, computer video, HDMI video, and DVI video.

1.05 SUBMITTALS

A. General: Submit the following in accordance with Conditions of Contract and Division 1 Specification Sections.

B. Product data for each type of product specified.

C. Shop drawings detailing video system including, but not limited to the following:
   1. Product data for each type of product specified.
   2. Shop drawings detailing video system including, but not limited to the following:
      a. Connection panels.
      b. Rack elevations showing component arrangement inside equipment racks.
   3. Wiring Diagrams detailing wiring for power, signal, and control. Provide actual hook-up drawings showing the connection point of each conductor. Single line drawings will not be accepted. Include all cable labeling on wiring diagrams. Identify terminal numbers and wiring color codes to facilitate installation, operation, and maintenance.
   4. Maintenance data for materials and products, for inclusion in Operating and Maintenance Manual specified in Division 1 and Division 27 Section "Basic Technology Systems Requirements." Provide complete operations and maintenance manual material concurrently with system submittal and provide updated final versions of manuals one month before completion of construction and final system turnover. Include the following:
      a. Equipment list showing quantity, make, model, and serial number.
      b. System operating instructions.
      c. System maintenance instructions.
   5. Wiring codes for all system cable. (See "labeling", this section).
   6. Proposed labeling for system components. (See "labeling", this section).
   7. All special submittal instructions indicated on supplied design drawings.

1.06 QUALITY ASSURANCE

A. Manufacturer's Qualifications: Firms regularly engaged in manufacture of video system, components and accessories, of types, capacities and characteristics required, whose products have been in satisfactory use in similar service for not less than 5 years.

B. Installer's Qualifications: Firms with at least 5 years of successful installation experience of A/V system projects similar to that required for this project. In addition, installers must have successfully completed a minimum of 3 similar installations over a period of 2 years prior to the date of the bid opening for this project. System installations must have included similar switchers, matrices, scalers, processors, and monitors. To qualify as similar, video systems must have included complete installation, set up, programming, calibration, and equalization of switchers, matrix routers, scalers, processors, and monitors. All such installation, set up, programming, calibration, and equalization work must have been completed by a factory trained and certified technician of the specified switchers, matrix routers, scalers, and processors manufacturer. The certified technician must have successfully completed all relevant training courses recommended by the manufacturers of the above referenced equipment for proficiency in these skill sets. In addition, the certified technician must have been, and now be, a direct employee of the installer, in a permanent office staffed with factory qualified technicians, working for a minimum of 40 hours per week as a direct employee of the installer. The certified technician and factory trained installers must be the direct employees of the installer; sub-contracted, third party maintenance agreements, or similar arrangements are expressly prohibited, and do not qualify. Upon request, submit evidence of such qualifications to the Designer/Engineer. All of the above requirements must be complied with prior to the bid opening for this project.

C. Crestron Digital Media Training: Installer shall have on staff a Crestron DMC-E and shall have a Crestron DMC-T certified technician on site during the installation of all Creston DM devices.

D. Electrical Component Standard: Provide work complying with applicable requirements of NFPA 70 "National Electrical Code."

E. EIA Compliance: Comply with the following Technology Industries Association Standards.

1.07 DELIVERY, STORAGE, AND HANDLING

A. Deliver products in factory containers. Store in clean, dry space in original containers. Protect products from fumes and construction traffic. Handle carefully to avoid damage.

1.08 WARRANTY REQUIREMENTS

A. Video system shall be subject to warranty requirements as stated in section 27 41 16.00.

PART 2 PRODUCTS

2.01 MANUFACTURERS

A. Manufacturers: Subject to compliance with requirements, provide products by those manufacturers identified in the equipment list.

2.02 SYSTEM REQUIREMENTS

A. General: Provide a complete and fully functional video system using materials and equipment of types, sizes, ratings, and performances as indicated in the project drawings. Use materials and equipment that comply with referenced standards and manufacturers' standard design and construction in accordance with published product information. Coordinate the features of materials and equipment so they form an integrated system with components and interconnections matched for optimum performance of specified functions.

B. Video Projection System: Provide complete projection system set up services including but not limited to convergence, focusing, preset programming, and alignment. Include manufacturer direct services and on site support.

1. Set Up: Provide complete setup and convergence services as defined in the manufacturer’s installation manual. Assure that all display devices automatically lock onto all owner designated horizontal scan frequencies and save to memory locations. Provide all equipment required to accomplish programming. At a minimum, without implying limitation, and in addition to those horizontal scan frequencies requested by the owner during the final system set up phase, program display systems to automatically lock onto horizontal scan frequencies for the following resolutions:
    a. NTSC
    b. VGA
    c. WGA
    d. SVGA
    e. XGA
    f. WXGA
    g. WXGA+
    h. SXGA
    i. SXGA+
    j. WSXGA+
    k. UXGA
    l. WUGA
    m. QXGA
    n. WQXGA
    o. MAC II
    p. MAC QUADRA
    q. IBM workstations
    r. UNIX workstations
    s. SUN workstations
    t. 720p
    u. 1080i
    v. 1080p
    w. 1920 x 1200
2. All monitor images shall be free of visible vibration and/or motion. Provide vibration isolation and dampening equipment where required.

2.03 EQUIPMENT AND MATERIALS

A. General: Provide equipment selected from equipment list on drawings, or as substituted following the proscribed substitution process, using all solid-state components fully rated for continuous duty at the ratings indicated or specified. Select equipment for normal operation on input power supplied at 105-130 V, 60 Hz.

B. Furnish and install adaptor cables and patch cables which comply with all requirements specified in the project notes.

PART 3 EXECUTION

3.01 EXAMINATION

A. Examine conditions, with the Installer present, for compliance with requirements and other conditions affecting the performance of the video system work.

B. Do not proceed until unsatisfactory conditions have been corrected.

3.02 INSTALLATION

A. General: Install system in accordance with NFPA 70 and other applicable codes. Install equipment in accordance with manufacturer's written instructions.

B. All equipment shall be firmly secured in place unless requirements of portability dictate otherwise. Fastenings and supports shall be adequate to support their loads with a safety factor of at least three times the weight of the equipment being installed. Any structural mounting that is not able to meet this requirement due to the specific nature of the equipment, manufacturer's requirements or limitations of the facility shall not be installed without prior approval of the Architect. Install all boxes, equipment, hardware, and other materials plumb, level, and square.

C. Install all technology equipment and support equipment in all podiums, and the other millwork in a neat and cosmetically dressed-out manner. All saw cuts, holes and recesses into laminates and woodwork shall be straight, all radius and circular cuts shall be consistent, and all uneven surfaces shall be corrected. This shall include the use of moldings, grommets, bushings, laminates, and wood products as required to dress out the installation of equipment. Assure that the installation of equipment and panels in the technology racks and podiums are completed by using matching screws, hardware and grommets.

D. Electronics:
   1. Assure sufficient ventilation for adequate cooling of equipment.
   2. Install vent rack panels in unused spaces.
   3. Securely fasten equipment plumb and square in place. Where equipment is installed in rack cabinets, utilize all fastening holes and cover open spaces with perforated panels.
   4. Securely fasten relays and small components. Do not use sticky-back tape for fasteners.
   5. Install balancing transformer on each unbalanced input or output that connects to device outside equipment cabinet, or that connects to balanced input or output within equipment cabinet.
   6. Connect powered components to 120 VAC outlets on transient voltage surge suppressors. Do not connect to outlets on other components.
   7. Leave sufficient service loops of uniform length on cables to allow operation of system with chassis outside cabinet.
   8. All equipment shall be held firmly in place with proper types of mounting hardware as recommended and/or supplied by the manufacturer. All mounting hardware provided with equipment shall be used when practical. This shall include, but not be limited to, front and rear rack rails, angle brackets and rack mount kits. All equipment shall be installed so as to provide reasonable safety to the operator.

E. Cable, Wire, and Connectors:
   1. All cable and wire shall be new and unspliced. Splicing of cables and conductors is expressly prohibited in any location other than the equipment racks. Splicing of audio and

video cables will not be allowed in any location. Splicing of control conductors shall be accomplished via punch block or terminal strip connections only.

2. Additional cable length shall be provided at all connector locations. Duplex box, junction box, and floor box locations shall be installed with sufficient cable length behind cover plates to permit wiring maintenance and connector replacement in the future.
3. When cable runs utilize the vertical cable raceways located within walls, the acoustic integrity of the walls shall be maintained. All cables that pass through cover plates of junction boxes and raceways, through slab-to-slab walls, and through conduit lines shall be properly gasketted and sealed and all acoustic material shall be restored or replaced.
4. Separation between system cables and all other services shall be maximized to prevent and/or minimize the potential for electro-magnetic interference (EMI). Particular care shall be taken to ensure at least a 12" separation from electrical lines whenever feasible. At points where separation is unavoidable, distribution cables shall cross other services at right angles whenever practical to minimize EMI.
5. Cables shall be installed in a manner that shall ensure no signal cables are placed on top of any lighting fixtures, ceiling speakers, HVAC controls or sensing devices, fire safety and sprinkler system detection technology, or any other technology or mechanical equipment.
6. No cables shall be laid directly on top of T-bar grid ceiling tiles. Support cables installed outside of conduit at a maximum of four foot intervals from the building structure. Do not utilize support wires from other trades or systems.
7. System cables shall be installed in a manner that will not block access to other equipment or services, across removable service panels and/or in any other manner to prohibit routine maintenance of HVAC systems, fire safety equipment and building mechanical control systems.
8. All exposed conductors inside of equipment racks shall be dressed with heavy duty neoprene heat-shrink tubing.
9. All inter-rack cabling shall be neatly laced, dressed, strain relieved and adequately supported.
10. After completion of wiring and cable installation, all trough and box covers shall be notched out and grommeted for clearance of the various cable bundles, (i.e., separate audio, video, and control). These panel covers shall be screwed back in place and all gaskets shall be restored or replaced.
11. Do not place any wires and cables for this system in any conduit, raceway, wireway or cable tray that is used for the mechanical systems of the building.
12. Provide connectors of the type and quality as detailed in this contract, and/or as required to meet the minimum bandwidth requirements of the equipment to which the connectors are terminated. The overall quantity of connectors shall not be limited by the quantities indicated in the drawings and shall be provided as required.
13. No connectors shall be installed in non-accessible locations or used for splicing cables. All connectors shall be new.
14. All connectors shall incorporate strain relief mechanisms which firmly grip the jacket of connected cables. All connectors shall be properly polarized to prevent improper seating. Connectors shall provide appropriate electrical characteristics for the circuitry to which they are attached.
15. All inner-rack cables shall be grouped according to the signals being carried to reduce signal contamination. Separate groups shall be formed for the following:
    a. Power
    b. Control
    c. Video
    d. Audio cables carrying signals less than -20 dBM.
    e. Audio cables carrying signals between -20 dBM and +20 dBM.
    f. Audio cables carrying signals over +20 dBM.

16. Route all cable and wiring within equipment racks, cabinets and millwork according to function, separating wires of different signal levels (microphone, line level, amplifier output, AC, control, etc.) by as much distance as possible. Neatly arrange, harness and bundle all cable with nylon U/V rated ties.
17. As a general practice, all power cables, control cables, and high level cables shall be run on the left side of equipment racks as viewed from the rear. All other cables shall be run on the right side of all equipment racks as viewed from the rear.
18. All cables, except video cables which must be cut to an electrical length, shall be cut to the length dictated by the cable run.
19. Terminal blocks, boards, strips or connectors, shall be furnished by the installer for all cables which interface with racks, cabinets, consoles, or equipment modules. Affix terminal blocks, boards, strips or connectors to equipment racks using screws only. Double sided tape will not be accepted.
20. Comply with industry standard circuit polarity and loudspeaker wiring polarity. No cables shall be terminated with a polarity reversal between connectors at either end.
21. All system wire, after being cut and stripped, shall have the wire strands twisted back to their original lay and be terminated by approved soldered or mechanical means. No bare wire ends shall be accepted.
22. Heat-shrink type tubing shall be used to insulate and dress the ends of all wire and cables including a separate tube for the ground or drain wire.
23. All solder connections shall be made with rosin-core solder. Temperature controlled soldering irons rated at least 60 watts shall be used for all soldering work. No soldering guns, gas or butane, or temperature unregulated irons shall be used on the job site.
24. All mechanical connections shall be made with approved crimp lugs of the correct size and type for the connection. Wire nuts shall not be permitted except inside speaker enclosures. Each connector shall be attached with the proper size controlled-duty-cycle ratcheting crimp tool which has been approved by the manufacturer of the connectors.
25. Conventional non-ratcheting type crimping tools are unacceptable, and shall not be used on the job site. The presence of such tools on the job site shall constitute evidence of mechanical connections made with unauthorized tools and shall provide sufficient grounds for rejection of all mechanical connections in the system, and the subsequent re-work of same.
26. Shields for audio cables shall be grounded at the input end only, of the various equipment items on the system to prevent potential for ground loops.
27. Where AV cable is installed in areas that are exposed to the view of end users, install AV cable and associated power cables inside nylon braided sleeving (wire loom). Examples of such areas include, but are not limited to cables installed to monitors, and cables installed to devices in/on lecterns such as touch panels and document cameras. Where security cables are specified for physical security to such devices, install the specified security cables inside the nylon braided sleeving along with the AV cables.

F. Identification and Labeling:
1. All cables, regardless of length, shall be marked with wrap-around, or better, number or letter cable markers at both ends. These labels shall be self laminating to ensure durability. The label format used shall be equal, or better than, the system detailed.
2. There shall be no unmarked cables any place in the system.
3. Marking codes used on cables shall correspond to codes provided with submittals, and/or the written documentation of the "as built" drawings.
4. All connectors, controls, equipment components, terminal blocks and equipment racks are to be permanently labeled in a format approved during the submittal process.
5. All equipment labels are to be permanently engraved in metal or plastic laminate and affixed with double-stick tape. Any alternative method shall be approved during the submittal process.

6. Clearly and permanently label all jacks, controls, connections, and so forth, with engraved laminated plastic labels. Embossed or printed label tape shall not be used and is considered unacceptable for this system. Attach labels with double stick tape as required.
7. All labeling shall be completed prior to acceptance of the final system.

G. Extended Display Identification Data (EDID):
1. All devices shall provide complete compatibility with analog and digital EDID data, facilitating display image specifications to source devices. Set EDID values in all equipment items in compliance with the native resolution of the specified display devices and the manufacturer's recommended practices.

H. High-bandwidth Digital Content Protection (HDCP):
1. All digital video devices shall provide complete compatibility with HDCP content protection ensuring all HDCP content can be displayed on all monitors.

I. Repairs: Wherever walls, ceilings, floors, or other building finishes are cut for installation , repair, restore, and refinish to original appearance.

3.03 GROUNDING

A. Provide equipment grounding connections for satellite earth-station systems and components, including dish antenna and supporting structures, and lead-in wires to antenna-discharge units. Tighten connections in accordance with manufacturer's recommended tightening torques. If not manufacturer-specified, comply with tightening torques specified in UL Stds 486A and B to assure permanent and effective grounds.

B. Provide equipment grounding connections for audio system as indicated. Tighten connections to comply with tightening torques specified in UL Standard 486A to assure permanent and effective grounds.

C. Ground equipment, conductor, and cable shields to eliminate shock hazard and to eliminate ground loops, common mode returns, noise pickup, cross talk, and other impairments. Provide 5-ohm ground at main equipment location. Measure, record, and report ground resistance.

D. Provide one #6 ground conductor with green insulation between all equipment racks and the main electrical panel ground bus. Connect at each end.

3.04 FIELD QUALITY CONTROL

A. Manufacturer's Field Services: Provide services of a factory authorized service representative to supervise the field assembly and connection of components and the pretesting, testing, and adjustment of the system.

B. Pretesting: Upon completing installation of the system, align, adjust, and balance the system and perform complete pretesting. Determine, through pretesting, the conformance of the system to the requirements of the Drawings and Specifications. Correct deficiencies observed in pretesting. Replace malfunctioning or damaged items with new, and retest until materials satisfactory performance and conditions are achieved.

C. Designer/Engineer Final Testing, Image Observation, and Review:
1. Contractor shall assist Designer/Engineer in performing the final testing, image observation, and review.
2. Coordinate final inspection schedule with Designer/Engineer two weeks minimum prior to Consultant's final inspection.
3. Have copy of red-lined as-built documents available at time of inspection.
4. Have loose equipment (monitors, patch cables, etc) available at time of inspection.
5. Assist Designer/Engineer in final review, testing, and image observation of completed system(s).
6. Provide the following test equipment in good working order:
a. Digitally generated test signal generator for all signals identified above. At a minimum, without implying limitation, signal generator shall output cross hatch, alternating pixel, grey scale, and color bar patterns.

b. Digital Volt-Ohmmeter.
c. Field strength meter.
d. Battery operated oscilloscope, 1 MHz minimum bandwidth.
e. Necessary charger, cables, test leads, adapter, power strip, etc, for test equipment.

7. Correct minor items so Designer/Engineer may certify satisfactory completion during his visit.
8. Pay Designer/Engineer's additional fees and expenses if building or system have not been completed properly or sufficiently, requiring Designer/Engineer to make subsequent visits to balance, equalize, inspect, or certify completion.

3.05 COMMISSIONING

A. Train Owner's maintenance personnel in the procedures and schedules involved in operating, troubleshooting, servicing, and preventative maintenance of the system. Comply with the requirements identified in section 27 41 16.00, project closeout.

B. Train Owner's non-technical users, and technical support personnel in the procedures and schedules involved in operating, troubleshooting, servicing, and preventative maintenance of the system. Provide a minimum of 4 hours training on two non-consecutive days (8 hours total). Include separate training sessions for non-technical users and for technical support personnel. Have ready, and refer to, all project documentation including, but not limited to, operating and maintenance instructions and As-built drawings. Allow the Owner to record any or all training sessions using audio and/or video recording equipment at their discretion.

C. Schedule training with Owner through the Architect, with at least 21 days advance notice.

3.06 CLEANING AND PROTECTION

A. Prior to final acceptance, clean system components and protect from damage and deterioration.

END OF SECTION 274114

SECTION 274115 – CONTROL SYSTEMS

PART 1 GENERAL

1.01 REFERENCE STANDARDS

A. NFPA 70 - National Electrical Code; Most Recent Edition Adopted by Authority Having Jurisdiction, Including All Applicable Amendments and Supplements.

1.02 SUMMARY

A. The control system will be a microprocessor based, modular card frame and card system, with control system intercommunication via a serial loop and Ethernet. Human interface will occur using color, programmable touch screen control panel(s), and/or miscellaneous control panels. The control system will control all room A/V functions and equipment as well as the room lighting system, where applicable. The control system will interface to components via Ethernet, infra-red, serial, and contact closure control signals. The control system will include all hardware, firmware, software, and programming to provide complete system control functions including but not limited to all requirements specified in the programming outline included herein.

B. All control system functionality and layout shall in general follow current city standards for panel layout and logic.

C. This Section includes requirements for control system hardware and software components including, but not limited to, the following:
   1. Touch Panels
   2. Control Panels
   3. Button Panels
   4. Modular card frame systems
   5. Control cards
   6. Volume controllers
   7. General bus devices
   8. Racks
   9. Ethernet Network Switches
   10. Control systems software
   11. Video processing software
   12. Audio processing software
   13. Wire, Cable, and Connectors

D. Related Sections: The following Division 27 sections contain requirements that relate to this section:
   1. General Technology Systems Requirements
   2. Basic Technology Systems Requirements
   3. Basic Technology Systems Materials and Methods
   4. Audio Systems
   5. Video Systems

E. Related Sections: Several sections of Division 26 contain requirements that relate to this section.

1.03 RELATED DOCUMENTS

A. Drawings and general provisions of Contract, including General and Supplementary Conditions apply to this Section.

B. Related Sections: The following Division 27 sections contain requirements that relate to this section:
   1. General Technology Systems Requirements
   2. Basic Technology Systems Requirements
   3. Basic Technology Systems Materials and Methods

4. Audio Systems
5. Video Systems

C. Related Sections: Several sections of Division 26 contain requirements that relate to this section.

1.04 SYSTEM DESCRIPTION

A. Comply with the Control System Programming Outline in developing the software programming for control system operations. The programming outline provides an in-depth narrative which describes the touch panel page design and specific button operating details. All button panel labels, and all touch panel buttons, graphics, and page configurations shall be developed and designed by the installer as required to produce a fully functioning system. All final page layouts shall be approved by the Designer/Engineer and the Owners representative prior to final programming. This shall include all "help" pages, and all new pages and/or buttons which may not be described in the programming outline, but, nevertheless are required to provide a fully functional A/V control system. Submit proposed page layouts for approval in conjunction with the specified submittal process. The intent of the programming outline is not to eliminate the field engineering required of the contractor, but rather to give a clear course of logic desired for the touch panel buttons and pages.

B. The control panels shall communicate with all specified A/V system components via the specified control system devices. All programming source code required to make the touch panel/button panel buttons operational shall be developed and written by the installer as required to produce a fully functioning system.

C. Where applicable, the control system software will be written to include the video conference code as a single block of programming. All other A/V system code will be written as a separate block, and added to the code for video conferencing code. Provide sufficient "remark statements" to identify various blocks of code.

D. In rooms where lighting control systems are specified, the fluorescent and/or incandescent overhead lights shall be controlled by the control system.

E. The Installer shall provide the complete source code to the Owner for the completed functioning control system. The source code shall be un-locked, and in a format that can be fully accessed by the Owner. In addition, the Installer must relinquish ownership of said software code, in writing, to the Owner.

F. The control system shall facilitate easy operation of all room functions from a single unified panel. This shall include all "technician level" set-up parameters, default settings, presets, and other operational functions as described in this specification and/or required to accomplish fully functioning system.

G. The control system shall include complete help functions as detailed in the Control System Programming Outline.

H. The control system shall include operation of power controllers to energize the designated rack mounted system equipment per the Control System Programming requirements, and the system installation guidelines.

I. The control system hardware shall be supplied by a manufacturer that offers factory-level training in advanced control operations and system programming. This training shall be available to enable the Owner's technical staff to acquire the technician-level skills needed to maintain the control system, and make programming modifications after the initial programming and installation of these systems, at the completion of the warranty period.

J. The control system, and its associated equipment, shall interface and operate all equipment and devices, as detailed in the control system programming outline, and as illustrated in the supplied design.

K. The control system shall include a "technician level" of operation separate from the "user level" of operation. This shall be provided to prevent unauthorized manipulation of set-up and control

parameters, as detailed in the control system programming section, and as deemed appropriate by the owner. This shall include additional features as dictated by equipment and control operations.

1.05 SUBMITTALS

A. Submit in accordance with Sections 013310, Submittal Procedures, and 013323, Shop Drawings, Product Data and Samples.

B. General: Submit the following in accordance with Conditions of Contract and Division 1 Specification Sections:
   1. Product data for each type of product specified.
   2. Shop drawings detailing control system including, but not limited to the following:
      a. Document of proposed system programming logic tree, showing integrated control of all specified equipment, as well as the type of control signal planned for each type of equipment.
      b. Paper document of proposed touch panel programming showing scaled, color printout's of all touch panel pages which identify button colors, configurations, icons, graphics, and text.
      c. Rack elevations showing component configuration inside equipment racks.
      d. Proposed modular control card for A/V, lighting, or motorized window covering system component to be controlled.
   3. Wiring Diagrams detailing wiring for power, signal, and control. Provide actual hook-up drawings showing the connection point of each conductor. Single line drawings will not be accepted. Include all cable labeling on wiring diagrams. Identify terminal numbers and wiring color codes to facilitate installation, operation, and maintenance.
   4. Maintenance data for materials and products, for inclusion in Operating and Maintenance Manual specified in Division 1 and Division 27 Section "Basic A/V System Requirements." Provide complete operations and maintenance manual material concurrently with system submittal and provide updated final versions of manuals one month before completion of construction and final system turnover. Include the following:
      a. Equipment list showing quantity, make, model, and serial number.
      b. System operating instructions.
      c. System maintenance instructions.
   5. List of AV equipment to be connected to the Owner's data network. (See "IP Address Assignments", this section).
   6. Wiring codes for all system cable. (See "labeling", this section).
   7. Proposed labeling for system components. (See "labeling", this section).
   8. All special submittal instructions indicated on supplied design drawings.

1.06 QUALITY ASSURANCE

A. Manufacturer's Qualifications: Firms regularly engaged in manufacture of control system, components and accessories, of types, capacities and characteristics required, whose products have been in satisfactory use in similar service for not less than 5 years.

B. Installer's Qualifications: Firms with at least 5 years of successful installation experience of A/V system projects similar to that required for this project. In addition, installers must have successfully completed a minimum of 3 similar installations over a period of 2 years prior to the date of the bid opening for this project. System installations must have included similar control system hardware and software. To qualify as similar, control systems must have included touch panel(s), central processing unit(s), and custom programming for touch panel pages. All custom programming code writing must have been written and de-bugged by a factory trained Crestron Certified programmer who has successfully completed all relevant training courses recommended by the control system manufacturer for proficiency in system programming. In addition, the certified programmer must have been, and now be, a direct employee of the installer, in a permanent office staffed with factory qualified technicians, working for a minimum of 40 hours per week as a direct employee of the installer. The certified programmer and factory trained installers must be the direct employees of the installer; sub-contracted, third

party maintenance agreements, or similar arrangements are expressly prohibited, and do not qualify. Upon request, submit evidence of such qualifications to the Designer/Engineer. All of the above requirements must be complied with prior to the bid opening for this project.

C. Crestron Digital Media Training: Installer shall have on staff a Crestron DMC-E and shall have a Crestron DMC-T certified technician on site during the installation of all Creston DM devices.

D. Electrical Component Standard: Provide work complying with applicable requirements of NFPA 70 "National Electrical Code."

E. Codes and Standards: Comply with the following Codes and Standards:
   1. Racks, Panels, and Associated Equipment, EIA-310-A.
   2. NESC Compliance: Comply with National Electrical Safety Code requirements.
   3. FCC Compliance: Comply with Subpart J of PART 15, FCC Rules pertaining to computing devices including Class A, Class B, personal and peripheral types. Provide equipment which complies with technical standards for both radiated and power line conducted interference.
   4. UL Compliance: Comply with applicable requirements of UL Standards 486A and B, 813, 983, 1409, 1410, 1412, 1414, 1416, 1417, and 1418 pertaining to control system products. Provide control system and components which are UL-listed and labeled.
   5. All installation practices shall be in accordance with, but not limited to, these specifications and drawings. Installation shall be performed in accordance with the applicable standards, requirements, and recommendations of the Uniform Building Code, the National Electrical Code and all local authorities having jurisdiction. All installation work shall follow "standard broadcast wiring" and installation practices, as excerpted from "Recommended Wiring Practices," Sound System Engineering, (2nd Edition), D. Davis, and performed to the highest standards of acknowledged industry practices.

1.07 DELIVERY, STORAGE, AND HANDLING

A. Deliver products in factory containers. Store in clean, dry space in original containers. Protect products from fumes and construction traffic. Handle carefully to avoid damage.

1.08 WARRANTY REQUIREMENTS

A. Control system shall be subject to warranty requirements as stated in section 27 41 16.00.

PART 2 PRODUCTS

2.01 MANUFACTURERS

A. Manufacturers: Subject to compliance with requirements, provide products by those manufacturers identified in the equipment list.

2.02 SYSTEM REQUIREMENTS

A. General: Provide a complete and fully functional control system using materials and equipment of types, sizes, ratings, and performances as identified in the equipment list. Use materials and equipment that comply with referenced standards and manufacturers' standard design and construction in accordance with published product information. Coordinate the features of materials and equipment so they form an integrated system with components and interconnections matched for optimum performance of specified functions.

B. The control system programming outline, as defined in these specifications, constitutes the minimum control system requirements for adequate control of the A/V and lighting systems. The programming outline is a guideline only, provided for the sole purpose of demonstrating intent. It is likely that touch panel/control system buttons, pages, and/or programming will be required which are not identified in the programming outline. During the final software programming, the installer shall work in a close and cooperative manner with the Designer/Engineer and Owner's representative as described in Part 3E to make additional modifications, and/or changes in programming procedural events, changes in touch panel functions, and changes in programming features as needed at no additional cost to the owner. These adjustments to the system programming outline in this section shall include, but not be

limited to, changes in the system programming code, page layouts, equipment operating modes, and system logic from the parameters outlined here to ensure the flexible and user friendly operation of the A/V system. Include all costs necessary to make moderate changes to the control system programming code and touch panel buttons and pages in the base bid.

C. The final program shall have sufficient "remark statements" at various points in the program to enable easy identification of blocks of programming code.

D. A/V system components will be controlled utilizing the most advanced protocol available. In every case, two way, serial control or Ethernet control will be used where available.

E. The Installer shall include a complete functioning code for the lighting system via control from both the touch panel pages as well as from the wall mounted lighting control panel as described.

F. Upon completion of system installation, a complete set of backup source code programs for the touch panels and mainframe technology of each room shall be provided on thumb drive or CD to the owner's representative.

2.03 EQUIPMENT AND MATERIALS

A. General: Provide equipment selected from equipment list on drawings, or as substituted following the proscribed substitution process, using all solid-state components fully rated for continuous duty at the ratings indicated or specified. Select equipment for normal operation on input power supplied at 105-130 V, 60 Hz.

PART 3 EXECUTION

3.01 EXAMINATION

A. Examine conditions for compliance with requirements and other conditions affecting the performance of the control system work.

B. Do not proceed until unsatisfactory conditions have been corrected.

C. Verify compliance of following items before beginning control equipment installation.
   1. No cables spliced except at standard barrier terminal blocks or approved method inside equipment racks.
   2. Cables marked at each end with permanent wire labels such as Brady or equal.
   3. Specified conduit, cables, enclosures and equipment cabinets are properly installed.
   4. Location and angle of loudspeaker cabinets.
   5. Location and stability of projection system mounting supports.

3.02 INSTALLATION

A. General: Install system in accordance with NFPA 70 and other applicable codes. Install equipment in accordance with manufacturer's written instructions.

B. IP Address Assignments: The Owner's Information Technology Department will assign an IP address space for all AV equipment requiring an Ethernet network connection to be provided as part of this project in compliance with the following:
   1. All AV equipment will connect directly to an isolated VLAN on the Owner's data network. The AV equipment does not need to be VLAN aware.
   2. Any modifications with respect to the mandated IP Address Assignment Procedure must be approved during the submittal process.
   3. IP Address Assignment Procedures:
      a. The AV Contractor shall provide a list of AV equipment to be connected to the Owner's data network at least three (3) working days prior to installation. The AV equipment list shall be provided to the Owner in a spreadsheet or comma-delimited file format. The equipment information shall include the following:
         1) Manufacturer
         2) Model Number
         3) Serial Number
         4) Media Access Control (MAC) address

5) Project room number where the equipment is to be installed

b. The Owner's Information Technology Department will register the above provided AV equipment and MAC addresses for use on the Owner's network, and assign an IP address to each piece of equipment.

c. The Owner will provide the equipment list file back to the AV contractor with IP address assignments within three (3) working days of receipt of the equipment list.

d. The AV Contractor shall submit an updated equipment list with any equipment changes or configuration modifications that occur during the course of the project.

4. Network Connection:

a. The AV contractor shall provide a labeled data patch cable per the project specifications, and connect the AV equipment directly to the lowest numbered data outlet provided at each classroom lectern, instructor station, and monitor location. Each subsequent piece of AV equipment shall be connected to the next lowest sequentially numbered data outlet. Provide data patch cables with a purple jacket.

C. System Programming and Programming Outline: Provide complete control system programming services including but not limited to the creation of custom software required to meet all contract document requirements including but not limited to the programming outline specified below. Include manufacturer direct services and on site support. Please note that not all equipment, functions, and/or controls may not be specified or required for all rooms. Program software based on the following programming outline as applicable to individual single line diagrams identified in the accompanying drawings.

D. The control system programmer is to work closely with the design consultant and owner's representative and shall meet a minimum of three times during this process: 1st before initial programming to determine general scope and functionality; 2nd after initial programming to review the program before it is implemented; 3rd approximately one month after building completion to review the system functionality. The programmer will make adjustments after each of these meetings to the owner's satisfaction at no cost to the owner.

1. GENERAL PROGRAMMING REQUIREMENTS: The following programming outline contains control system programming requirements. In addition to these requirements, these specifications mandate the use of previously written code blocks, and system functionality descriptions prepared by the control system manufacturer. Where non-touch panel user interfaces are specified, follow the concepts and general control system logic identified in the Programming Outline for touch panels when programming the functionality of the non-touch panel user interfaces.

2. SYSTEM ACTIVATION: When the A/V system has been deactivated by the system off button, or when the touch panel has entered its "time out" mode, display the following message on the touch screen: "TOUCH SCREEN TO ACTIVATE". This message will remain constantly on, and shift positions if recommended by the manufacturer to prevent burn in.

3. INDIVIDUAL SYSTEM SHUTDOWN: Regardless of the time of day, the control system CPU in each individual room shall monitor system usage. If a control command has not been issued within a user adjustable period of time, a pop up window will ask "Do you want the A/V system to remain on?" with a "yes" button. If the yes button is engaged within 30 seconds, the system will remain on. If the yes button is not engaged within 30 seconds, a system off command will be issued, and the A/V system will proceed through orderly shut down. In addition, the control system in each room will automatically issue an off command each day at a user adjustable time of day.

4. PRE-PROGRAMMED SOFTWARE: Where manufacturers provide pre-programmed software (room scheduling and digital queuing), fully implement all features of the specified programs and fully integrate programs with the Owner's network and applicable software packages such as Microsoft Outlook. Program all interface "hooks" as recommended by the software manufacturer and as requested by the Owner during the submittal review process.

5. GLOBAL OFF COMMAND: At a certain Owner identified time each day (for example, 10:00 p.m.), send an off command to all system electronics which can be damaged, or have component life shortened by remaining powered on for extended periods of time. At a minimum, without implying limitation, include flat display devices. Off command will power down all above identified equipment in an orderly shut down process at the appointed time.
6. BUTTON HIGHLIGHTING: When any button is engaged on any touch panel control page, that button shall be highlighted for the duration of physical contact between the finger and touch screen. In addition, when a any system function is activated/selected, the button will remain highlighted to identify the active status of the control system. In addition, comply with additional button highlighting requirements stated in the programming outline.
7. PAGE FLIPS AND POP UP WINDOWS: Page flips and pop up windows are specified throughout the programming outline. If, at a specific location in the touch panel pages, the programmer believes one is more appropriate than the other, the programmer is encouraged to consult with the AV designer. Where pop-up windows are used, program automatic time outs so that the pop up window will be automatically removed from the screen after a user adjustable period of time.
8. BUTTON CONTROL PANEL: The below description of menu bars and buttons applies directly to touch panels. Where button panels are specified rather than touch panels, apply similar logic to button functions and nomenclature. Include button panel layouts with descriptions of individual button functionality with touch panel page submittals.
9. GREETING PAGE: Upon first touching the screen a GREETING PAGE shall be displayed. This page will contain the OWNER'S LOGO, a welcome message, the DATE, the TIME, have the SYSTEM ON button, a HELP button and a LIGHTS button.
    a. BUTTON - SYSTEM ON: Selecting will power on the AV system. Sequence power up of the AV system to power on the audio power amplifiers last. In addition, all A/V applicable system parameters shall be set to default values. As an example only, without implying limitation, all volume levels shall be set to default values; the audio and video mutes shall be disengaged if previously left on; etc.... Upon system power up, route the resident CPU to the lectern monitor as a default. In addition, selecting brings up a START PAGE containing all common button bars.
10. GENERAL CONCEPT COMMON BUTTON BARS (not all buttons apply to every room): With the exception of the greeting page, control system touch panel pages will contain all "common button bars" for the purpose of allowing access to fundamental control functions from any location in the touch panel page/software program. When a button in the common button bar group is selected, that button shall become highlighted, and remain highlighted until interaction with the corresponding page is terminated. At a minimum, without implying limitation, the common button bars shall contain the following:
    a. COMMON BUTTON BAR 1, GENERAL, (top center):
        1) BUTTON - SOURCE SELECT: Selecting brings up the source selection page.
        2) BUTTON - CONFERENCING (if applicable): Selecting brings up the conferencing select page.
        3) BUTTONS - SIGNAL ROUTING: Selecting brings up a graphic with origin and destinations for all rooms with signal routing capability (matrix switchers). Provide all buttons required to select signals and send them to the various destinations identified in the applicable single line diagrams.
        4) BUTTON – CURRENT STATUS: Selecting displays the current status of the AV system. Items to be identified include, but are not limited to: Power to individual system components, system muting, audio levels, lighting levels, input currently selected.
        5) BUTTON - DISPLAY MODIFY: Selecting brings up the display modify page.
        6) BUTTON - WINDOW COVERINGS (if applicable): Selecting brings up the motorized window coverings control page.
        7) BUTTON - SYSTEM OFF: Selecting shall display a text prompt asking "Are you sure?" with a text message stating that a certain period of time must elapse

(time to be determined by the monitor manufacturer) before the system can be powered on again; in addition, provide buttons YES, and NO. IF YES, the system shall power off the AC power controllers in reverse order of turn on, turning the audio amplifiers off first, followed, three (3) seconds later, by the rest of the designated A/V equipment. In addition, bring up a pop-up window which reminds the user to log off the resident CPU in the lectern. If NO, the system shall return the touch panel back to the previous page with no action taken.

8) DISPLAY - DATE: Will display the correct date.
9) DISPLAY - TIME: Will display the correct time of day.

b. COMMON BUTTON BAR 2, LIGHTING, (left):
1) BUTTON - FULL, (100%): Selecting shall cause selected room lighting to fade to programmed presets in 3 seconds.
2) BUTTON - PRESENT (if applicable): Selecting shall cause selected room lighting to fade to programmed presets in 3 seconds.
3) BUTTON - VIDEO CONFERENCE (for rooms with video conferencing only): Selecting shall cause selected room lighting to fade to programmed presets in 3 seconds.
4) BUTTON - PROJECTION: Selecting shall cause selected room lighting to fade to programmed presets in 3 seconds.
5) BUTTON - ROOM LIGHTS INCREASE: Selecting shall increase scene lighting levels. Minimum and maximum levels shall be programmed into the dimming system. Button shall operate incrementally and continuously. When selected incrementally, the room light levels shall increase incrementally within the preprogrammed minimum and maximum parameters. When touched continuously, the light levels shall increase continuously within the preprogrammed minimum and maximum parameters.
6) BUTTON - ROOM LIGHTS DECREASE: Selecting shall decrease scene lighting levels. Minimum and maximum levels shall be programmed into the dimming system. Button shall operate incrementally and continuously. When selected incrementally, the room light levels shall decrease incrementally within the preprogrammed minimum and maximum parameters. When touched continuously, the light levels shall decrease continuously within the preprogrammed minimum and maximum parameters.
7) BUTTON - OFF: Selecting shall cause selected room lighting to fade to off in 3 seconds.

c. COMMON BUTTON BAR, MISCELLANEOUS (bottom left):
1) BUTTON - BACK: Selecting shall return the user to the previous page selected, similar to a common web browser. This function shall be provided on every touch panel page except for the GREETING PAGE and START PAGE.
2) BUTTON - HELP: Selecting shall bring up a message which directs the user to open the lectern drawer, retrieve the telephone set, and call the Help Desk. A RETURN button shall be provided on the help page to return the operator to the previous page. In addition, the message will extinguish automatically after an Owner identified amount of time.

d. COMMON BUTTON BAR 3, VOLUME CONTROL, (right):
1) BUTTON – MICROPHONE VOLUME UP: Selecting shall simultaneously increase the input levels of all microphone inputs to the mixer. All mixer levels will change independently, without changing relative levels between microphone inputs. Minimum and maximum levels shall be programmed into the volume control which shall prevent complete inaudibility and/or feedback. Button shall operate incrementally and continuously. When selected incrementally, the volume shall increase incrementally within the preprogrammed minimum and maximum parameters. When touched continuously, the volume shall increase continuously within the preprogrammed minimum and maximum parameters. If microphones were muted prior to selection, disengage the mute function, display

the bar graph, and engage the volume up control.

2) BUTTON - MICROPHONE VOLUME DOWN: Selecting shall simultaneously decrease the input levels of all microphone inputs to the mixer. All mixer levels will change independently, without changing relative levels between microphone inputs. Minimum and maximum levels shall be programmed into the volume control which shall prevent complete inaudibility and/or feedback. Button shall operate incrementally and continuously. When selected incrementally, the volume shall decrease incrementally within the preprogrammed minimum and maximum parameters. When touched continuously, the volume shall decrease continuously within the preprogrammed minimum and maximum parameters. If microphones were muted prior to selection, disengage the mute function, display the bar graph, and engage the volume down control.
3) DISPLAY - MICROPHONE VOLUME UP AND DOWN BAR GRAPH: Bar graph shall be continuously displayed adjacent to volume up and down buttons. Bar graph shall graphically display the window between the preprogrammed minimum and maximum volume settings. The bar graph shall be divided into a minimum of 10 segments which shall incrementally or continuously appear or disappear according to the volume button selected. The bar graph display shall be removed from the screen when the mute function is selected. The bar graph shall be restored to its previous setting when the mute function is toggled off.
4) BUTTON - MICROPHONE MUTE (toggle function): Selecting shall highlight and flash the button, and simultaneously mute all microphone inputs to the mixer. Mute shall be defined as a minimum 60 dBA decrease in sound pressure level. Bar graph display shall be removed. Selecting again will simultaneously un-mute all microphone inputs to the mixer, and the bar graph display will be restored showing its previous setting.
5) INDIVIDUAL MICROPHONE LEVEL CONTROL: Provide buttons required to select each individual microphone input and to control its level.
6) BUTTON - MEDIA SOURCE VOLUME UP: Selecting shall simultaneously increase the input levels of all media source inputs to the mixer. All mixer levels will change independently, without changing relative levels between microphone inputs. Minimum and maximum levels shall be programmed into the volume control which shall prevent complete inaudibility and/or feedback. Button shall operate incrementally and continuously. When selected incrementally, the volume shall increase incrementally within the preprogrammed minimum and maximum parameters. When touched continuously, the volume shall increase continuously within the preprogrammed minimum and maximum parameters. If the media source mixer inputs were muted prior to selection, disengage the mute function, display the bar graph, and engage the volume up control.
7) BUTTON - MEDIA SOURCE VOLUME DOWN: Selecting shall simultaneously decrease the input levels of all media source inputs to the mixer. All mixer levels will change independently, without changing relative levels between microphone inputs. Minimum and maximum levels shall be programmed into the volume control which shall prevent complete inaudibility and/or feedback. Button shall operate incrementally and continuously. When selected incrementally, the volume shall decrease incrementally within the preprogrammed minimum and maximum parameters. When touched continuously, the volume shall decrease continuously within the preprogrammed minimum and maximum parameters. If the media source mixer inputs were muted prior to selection, disengage the mute function, display the bar graph, and engage the volume down control.
8) DISPLAY - MEDIA SOURCE VOLUME UP AND DOWN BAR GRAPH: Bar graph shall be continuously displayed adjacent to volume up and down buttons. Bar graph shall graphically display the window between the preprogrammed

minimum and maximum volume settings. The bar graph shall be divided into a minimum of 10 segments which shall incrementally or continuously appear or disappear according to the volume button selected. The bar graph display shall be removed from the screen when the mute function is selected. The bar graph shall be restored to its previous setting when the mute function is toggled off.

9) BUTTON - MEDIA SOURCE MUTE (Toggle function): Selecting shall highlight and flash the button, and simultaneously mute the media source inputs to the mixer. Mute shall be defined as a minimum 60 dBA decrease in sound pressure level. Bar graph display shall be removed. Selecting again will simultaneously un-mute the media source inputs to the mixer, and the bar graph display will be restored showing its previous setting.
10) BUTTON - FAR END AUDIO VOLUME UP (required where teleconferencing/video conferencing capability is specified).: Selecting shall increase the conferencing far end audio input to the mixer. Minimum and maximum levels shall be programmed into the volume control which shall prevent complete inaudibility and/or feedback. Button shall operate incrementally and continuously. When selected incrementally, the volume shall increase incrementally within the preprogrammed minimum and maximum parameters. When touched continuously, the volume shall increase continuously within the preprogrammed minimum and maximum parameters. If the far end audio was muted prior to selection, disengage the mute function, display the bar graph, and engage the volume up control.
11) BUTTON - FAR END AUDIO VOLUME DOWN (required where teleconferencing/video conferencing capability is specified). : Selecting shall decrease the conferencing far end audio input to the mixer. Minimum and maximum levels shall be programmed into the volume control which shall prevent complete inaudibility and/or feedback. Button shall operate incrementally and continuously. When selected incrementally, the volume shall decrease incrementally within the preprogrammed minimum and maximum parameters. When touched continuously, the volume shall decrease continuously within the preprogrammed minimum and maximum parameters. If the far end audio was muted prior to selection, disengage the mute function, display the bar graph, and engage the volume down control.
12) DISPLAY - FAR END AUDIO VOLUME UP AND DOWN BAR GRAPH (required where teleconferencing/video conferencing capability is specified): Bar graph shall be continuously displayed adjacent to volume up and down buttons. Bar graph shall graphically display the window between the preprogrammed minimum and maximum volume settings. The bar graph shall be divided into a minimum of 10 segments which shall incrementally or continuously appear or disappear according to the volume button selected. The bar graph display shall be removed from the screen when the mute function is selected. The bar graph shall be restored to its previous setting when the mute function is toggled off.
13) BUTTON - FAR END AUDIO MUTE (toggle function) (required where teleconferencing/video conferencing capability is specified): Selecting shall highlight and flash the button, and mute far end audio input to the mixer. Mute shall be defined as a minimum 60 dBA decrease in sound pressure level. Bar graph display shall be removed. Selecting again will un-mute the far end audio input to the mixer, and the bar graph display will be restored showing its previous setting.

11. SOURCE SELECTION PAGE (Source devices vary in individual rooms. Refer to drawings for source devices specified for individual rooms):
    a. BUTTON - BluRay: Selecting shall power up the applicable equipment (including source devices and displays if not already on), set all applicable parameters to default values, route the stereo audio and video through the switching technology and

audio reinforcement system to the appropriate display devices and to the audio amplification system. In rooms where multiple display devices serve a single physical space, the appropriate display devices will be selected utilizing a pop up graphic of the applicable room floor plan. The floor plan will show a button icon representing each display device at the appropriate location within the room graphic, and prompt: "PLEASE SELECT DESIRED DISPLAY DEVICES". As display devices are selected, buttons will become and remain highlighted. In addition, provide an ENTER button to implement display device selection commands to the switching technology. In addition, selecting will adjust lighting levels to the projection preset. In addition, selecting will close all motorized window coverings (if applicable). In addition, selecting will bring up the DVD function control page.

b. BUTTON - AUDIO INPUT (TYPICAL): Selecting shall power up the applicable equipment (including source devices and displays if not already on), route the stereo audio through the audio reinforcement system to the appropriate audio amplification system. In addition, selecting will bring up the audio input function control page.

c. BUTTON - VIDEO INPUT (TYPICAL OF HDMI, DVI, YC, AND COMPOSITE VIDEO INPUTS WHERE APPLICABLE): Selecting shall power up the applicable equipment (including source devices and displays if not already on), route the stereo audio and video through the switching technology and audio reinforcement system to the appropriate display devices and to the audio amplification system. In rooms where multiple display devices serve a single physical space, the appropriate display devices will be selected utilizing a pop up graphic of the applicable room floor plan. The floor plan will show a button icon representing each display device at the appropriate location within the room graphic, and prompt: "PLEASE SELECT DESIRED DISPLAY DEVICES". As display devices are selected, buttons will become and remain highlighted. In addition, provide an ENTER button to implement display device selection commands to the switching technology. In addition, selecting will adjust lighting levels to the projection preset. In addition, selecting will close all motorized window coverings (if applicable). In addition, selecting will bring up the video input function control page.

12. DISPLAY MODIFY PAGE: Provide a room graphic of the applicable room floor plan or possible video window configurations. The floor plan will show a button icon representing each display device at the appropriate location within the room graphic. In addition, include a HELP button as specified above. Selecting a button shall bring up a pop up window with the following buttons:
    a. BUTTON - ON: Turns the selected display device on (including source devices and displays if not already on).
    b. BUTTON - OFF: Turns the selected display device off (if not already off).
    c. BUTTON - CLEAR: Clears all control commands issued to modify the source selection to the selected display device. Relinquish source selection control to the standard source selection specified above.
    d. BUTTONS - AVAILABLE SOURCES: Provide one button icon for each available source device. Once a source device is selected, command the switching technology to route the selected source to the selected display device and remove the pop up window from the screen.
13. FUNCTION CONTROL PAGES: Provide function control pages for the following devices:
    a. BlueRay
    b. Video Conferencing Systems (CODECS) (if applicable)
    c. Teleconferencing Systems (if applicable)
        1) Provide the following buttons on the respective function control pages for the above identified devices:

(a) BUTTONS: Provide all buttons necessary to control all functions of the selected device/system. As a general rule, without implying limitation, provide control buttons on touch panel function control pages or button control panels which duplicate the control buttons provided on or in the device/system control panel, remote controller, and/or control software. Where sensible, configure and label buttons on touch panel function control pages in the same way system/device control buttons are configured and labeled on their own control panels, remote controllers, and/or control software.

(b) BUTTON – CLOSE: Selecting shall highlight button and display a text prompt asking "Are you sure?" with buttons YES, and NO. If YES is selected, discontinue all transport functions (if any) associated with the function control page. In addition the room lighting shall fade to the “full” preset. In addition, selecting shall return the user to the START PAGE. If NO, the system shall return the touch panel back to the previous page with no action taken.

14. FUNCTION CONTROL PAGES: Provide pop-up messages for the following devices (applicable to touch panels only):
    a. Video Inputs (including all formats specified in the accompanying drawings)
    b. Audio Inputs
        1) Provide the following messages on the respective function control pages for the above identified devices:
            (a) TEXT MESSAGE: "You have selected computer input XX as an input source for display".
            (b) BUTTON - CLOSE: Selecting shall highlight button and display a text prompt asking "Are you sure?" with buttons YES, and NO. If YES is selected, discontinue all transport functions (if any) associated with the function control page. In addition the the room lighting shall fade to the “full” preset. In addition, selecting shall return the user to the START PAGE. If NO, the system shall return the touch panel back to the previous page with no action taken.
15. TECHNICIAN SET-UP PAGES: NOTE: Unlike all other control system pages, the technician set up pages are described in general terms. The intent is to provide the installer flexibility in page creation and software programming.
    a. BUTTONS - PASSWORD PROGRAMMING: Provide required buttons to program and save four digit password(s) for access to the specified pages. Password to be comprised of any combination of numbers and/or letters.
    b. BUTTONS - DATE AND TIME SET: Provide required buttons to set and enter the correct date, including day, month, and year. Provide required buttons to set and enter the correct time of day including hours and minutes.
    c. BUTTON - HELP: Provide as specified above.

END OF PROGRAMMING OUTLINE

A. All equipment shall be firmly secured in place unless requirements of portability dictate otherwise. Fastenings and supports shall be adequate to support their loads with a safety factor of at least three times the weight of the equipment being installed. Any structural mounting that is not able to meet this requirement due to the specific nature of the equipment, manufacturer's requirements or limitations of the facility, shall not be installed without prior approval of the Designer/Engineer. Install all boxes, equipment, hardware, and other materials plumb, level, and square.

B. Install all technology equipment and support equipment in all podiums, and the other millwork in a neat and cosmetically dressed-out manner. All saw cuts, holes and recesses into laminates and woodwork shall be straight, all radius and circular cuts shall be consistent, and all uneven surfaces shall be corrected. This shall include the use of moldings, grommets, bushings,

laminates, and wood products as required to dress out the installation of equipment. Assure that the installation of equipment and panels in the technology racks and podiums are completed by using matching screws, hardware and grommets.

C. Technology:
   1. Assure sufficient ventilation for adequate cooling of equipment.
   2. Install vent rack panels in unused spaces.
   3. Securely fasten equipment plumb and square in place. Where equipment is installed in rack cabinets, utilize all fastening holes and cover open spaces with perforated panels.
   4. Securely fasten relays and small components. Do not use sticky-back tape for fasteners.
   5. Connect powered components to 120 VAC outlets on transient voltage surge suppressors. Do not connect to outlets on other components.
   6. Leave sufficient service loops of uniform length on cables to allow operation of system with chassis outside cabinet.
   7. All equipment shall be held firmly in place with proper types of mounting hardware as recommended and/or supplied by the manufacturer. All mounting hardware provided with equipment shall be used when practical. This shall include, but not be limited to, front and rear rack rails, angle brackets and rack mount kits. All equipment shall be installed so as to provide reasonable safety to the operator.

D. Cable, Wire, and Connectors:
   1. All cable and wire shall be new and unspliced. Splicing of cables and conductors is expressly prohibited in any location other than the equipment racks.
   2. Additional cable length shall be provided at all connector locations. Duplex box, junction box, and floor box locations shall be installed with sufficient cable length behind cover plates to permit wiring maintenance and connector replacement in the future.
   3. When cable runs utilize the vertical cable raceways located within walls, the acoustic integrity of the walls shall be maintained. All cables that pass through cover plates of junction boxes and raceways, through slab-to-slab walls, and through conduit lines shall be properly gasketted and sealed and all acoustic material shall be restored or replaced.
   4. Separation between system cables and all other services shall be maximized to prevent and/or minimize the potential for electro-magnetic interference (EMI). Particular care shall be taken to ensure at least a 12" separation from electrical lines whenever feasible. At points where separation is unavoidable, distribution cables shall cross other services at right angles whenever practical to minimize EMI.
   5. Cables shall be installed in a manner that shall ensure no signal cables are placed on top of any lighting fixtures, ceiling speakers, HVAC controls or sensing devices, fire safety and sprinkler system detection technology, or any other technology or mechanical equipment.
   6. No cables shall be laid directly on top of T-bar grid ceiling tiles. Support cables installed outside of conduit at a maximum of four foot intervals from the building structure. Do not utilize support wires from other trades or systems.
   7. System cables shall be installed in a manner that will not block access to other equipment or services, across removable service panels and/or in any other manner to prohibit routine maintenance of HVAC system, fire safety equipment and building mechanical control system.
   8. All exposed conductors inside of equipment racks shall be dressed with heavy duty neoprene heat-shrink tubing.
   9. All inter-rack cabling shall be neatly laced, dressed, strain relieved and adequately supported.
   10. After completion of wiring and cable installation, all trough and box covers shall be notched out and grommeted for clearance of the various cable bundles, (i.e., separate audio, video, and control). These panel covers shall be screwed back in place and all gaskets shall be restored or replaced.
   11. Do not place any wires and cables for this system in any conduit, raceway, wireway or cable tray that is used for the mechanical systems, electrical systems, or voice/data

systems of the building.

12. Provide connectors of the type and quality as detailed in this contract, and/or as required to meet the minimum bandwidth requirements of the equipment to which the connectors are terminated. The overall quantity of connectors shall not be limited by the quantities indicated in the drawings and shall be provided as required.
13. No connectors shall be installed in non-accessible locations or used for splicing cables. All connectors shall be new.
14. All connectors shall incorporate strain relief mechanisms which firmly grip the jacket of connected cables. All connectors shall be properly polarized to prevent improper seating. Connectors shall provide appropriate electrical characteristics for the circuitry to which they are attached.
15. All inner-rack cables shall be grouped according to the signals being carried to reduce signal contamination. Separate groups shall be formed for the following:
    a. Power
    b. Control
    c. Video
    d. Audio cables carrying signals less than -20 dBM.
    e. Audio cables carrying signals between -20 dBM and +20 dBM.
    f. Audio cables carrying signals over +20 dBM.
16. Route all cable and wiring within equipment racks, cabinets and millwork according to function, separating wires of different signal levels (microphone, line level, amplifier output, AC, control, etc.) by as much distance as possible. Neatly arrange, harness and bundle all cable with nylon U/V rated ties.
17. As a general practice, all power cables, control cables, and high level cables shall be run on the left side of equipment racks as viewed from the rear. All other cables shall be run on the right side of all equipment racks as viewed from the rear.
18. All cables, except video cables which must be cut to an electrical length, shall be cut to the length dictated by the cable run.
19. Terminal blocks, boards, strips or connectors, shall be furnished by the installer for all cables which interface with racks, cabinets, consoles, or equipment modules. Affix terminal blocks, boards, strips or connectors to equipment racks using screws only. Double sided tape will not be accepted.
20. Comply with industry standard circuit polarity and loudspeaker wiring polarity. No cables shall be terminated with a polarity reversal between connectors at either end.
21. All system wire, after being cut and stripped, shall have the wire strands twisted back to their original lay and be terminated by approved soldered or mechanical means. No bare wire ends shall be accepted.
22. Heat-shrink type tubing shall be used to insulate and dress the ends of all wire and cables including a separate tube for the ground or drain wire.
23. All solder connections shall be made with rosin-core solder. Temperature controlled soldering irons rated at least 60 watts shall be used for all soldering work
24. Conventional non-ratcheting type crimping tools are unacceptable, and shall not be used on the job site. The presence of such tools on the job site shall constitute evidence of mechanical connections made with unauthorized tools and shall provide sufficient grounds for rejection of all mechanical connections in the system, and the subsequent re-work of same.
25. All mechanical connections shall be made with approved crimp lugs of the correct size and type for the connection. Wire nuts shall not be permitted except inside speaker enclosures. Each connector shall be attached with the proper size controlled-duty-cycle ratcheting crimp tool which has been approved by the manufacturer of the connectors.
26. Shields for audio cables shall be grounded at the input end only, of the various equipment items on the system to prevent potential for ground loops.

27. Where AV cable is installed in areas that are exposed to the view of end users, install AV cable and associated power cables inside nylon braided sleeving (wire loom). Examples of such areas include, but are not limited to cables installed to monitors, and cables installed to devices in/on lecterns such as touch panels and document cameras. Where security cables are specified for physical security to such devices, install the specified security cables inside the nylon braided sleeving along with the AV cables.

E. Identification and Labeling:
   1. All cables, regardless of length, shall be marked with wrap-around number or letter cable markers at both ends. These labels shall be self laminating to ensure durability. The label format used shall be equal, or better than, the system detailed.
   2. There shall be no unmarked cables any place in the system.
   3. Marking codes used on cables shall correspond to codes provided with submittals, and/or the written documentation of the "as built" drawings.
   4. All connectors, controls, equipment components, terminal blocks and equipment racks are to be permanently labeled in a format approved during the submittal process.
   5. Clearly and permanently label all jacks, controls, connections, etc... Embossed or printed label tape shall not be used and is considered unacceptable for this system.
   6. All labeling shall be completed prior to acceptance of the final system.

F. Repairs: Wherever walls, ceilings, floors, or other building finishes are cut for installation , repair, restore, and refinish to original appearance.

4.02 GROUNDING

A. Provide equipment grounding connections for audio system as indicated. Tighten connections to comply with tightening torques specified in UL Standard 486A to assure permanent and effective grounds.

B. Ground equipment, conductor, and cable shields to eliminate shock hazard and to eliminate ground loops, common mode returns, noise pickup, cross talk, and other impairments. Provide 5-ohm ground at main equipment location. Measure, record, and report ground resistance.

C. Provide one #6 ground conductor with green insulation between all equipment racks and the main electrical panel ground bus. Connect at each end.

4.03 FIELD QUALITY CONTROL

A. Manufacturer's Field Services: Provide services of a factory authorized service representative to supervise the field assembly and connection of components and the pretesting, testing, and adjustment of the system.

B. Pretesting: Upon completing installation of the system, align, adjust, and balance the system and perform complete pretesting. Determine, through pretesting, the conformance of the system to the requirements of the Drawings and Specifications. Correct deficiencies observed in pretesting. Replace malfunctioning or damaged items with new, and retest until materials satisfactory performance and conditions are achieved.

C. Designer/Engineer Final Review:
   1. Contractor shall assist Designer/Engineer in reviewing the final system set up.
   2. Coordinate final inspection schedule with Designer/Engineer two weeks minimum prior to Consultant's final inspection.
   3. Contractor shall have the actual control system programmer on site during the complete duration of the Final Review and Commissioning process. Other competent contractor staff will not comply with this requirement. Only the actual control system programmer will comply with this requirement.
   4. Have copy of red-lined as-built documents available at time of inspection.
   5. Have loose equipment (cables, etc) available at time of inspection.
   6. Provide the following test equipment in good working order:
      a. Digital Volt-Ohmmeter.

7. Correct minor items so Designer/Engineer may certify satisfactory completion during his visit.
8. Pay Design/Engineer's additional fees and expenses if building or system have not been completed properly or sufficiently, requiring Designer/Engineer to make subsequent visits to inspect, or certify completion.

4.04 COMMISSIONING

A. Train Owner's maintenance personnel in the procedures and schedules involved in operating, troubleshooting, servicing, and preventative maintenance of the system. Comply with the requirements identified in section 27 41 16.00, project closeout.

B. Train Owner's non-technical users, and technical support personnel in the procedures and schedules involved in operating, troubleshooting, servicing, and preventative maintenance of the system. Provide a minimum of 4 hours training on two non-consecutive days (8 hours total). Provide training on days when training sessions are not provided to comply with the training requirements specified in other related sections. Have ready, and refer to, all project documentation including, but not limited to, operating and maintenance instructions and As-built drawings. Allow the Owner to record any or all training sessions using audio and/or video recording equipment at their discretion.

C. Schedule training with Owner through the Architect, with at least 21 days advance notice.

4.05 CLEANING AND PROTECTION

A. Prior to final acceptance, clean system components and protect from damage and deterioration.

END OF SECTION 274115

SECTION 275320
PUBLIC SAFETY DISTRIBUTED ANTENNA SYSTEM TESTING

PART 1 GENERAL

1.01 SUMMARY:

A. This Section includes base specifications for testing public safety coverage requirements. The contractor selected for the work of this section shall conduct a site survey, test and assess the need for this type of system and provide to the Owner a report wherein deficiencies have been found that would cause the facility to fail to comply with the life safety code as defined in Annex O to the Fire Code NFPA 1 and IFC section 510.4.

B. Contractor shall provide all site surveys to the Owner. Site survey must consist of grid testing the building using the control channel from the nearest public safety tower. Grid test shall consist of a minimum of 20 grids per floor. Pass/ Fail for each grid must be a minimum of -95dBm with a DAQ of 3. Testing shall be performed using a SeeHawk Touch or similar software. The technician performing the grid test must have a valid certification for the equipment being used.

1.02 DAS SYSTEM REQUIREMENTS:

A. If grid testing fails, the contractor shall provide a quote and design, following the design requirements outlined below.

B. Design: System design shall be performed using iBwave by a level 3 certified designer. DAS system must meet all national and local codes for public safety.

C. General: System shall operate without causing interference to other parts of the public safety radio system. There shall be a 20dB minimum isolation between donor and coverage antenna.

D. Radio Coverage: For critical areas, (command and control centers, fire pump rooms, exit stairwells and passageways, elevator lobbies, standpipe cabinets, and other areas deemed critical by the AHJ) shall have 99% coverage. For general areas, the coverage shall be 95% at -95dBm.

E. Signal Strength: Provide a minimum of inbound signal strengths of -95 dBm.

F. Repeaters: Contractor to confirm with the AHJ if a class A or B repeater is needed. BDA must be wired into the FACP for monitoring.

G. DAS system must be compliant with IFC section 510.4.2.1 through 510.4.2.8.

H. Data from grid testing must be uploaded into the iBwave design.

1.03 QUALITY ASSURANCE

A. Design: A certified RF engineer who is licensed with a level 3 iBwave design certification. RF engineer must hold a valid certification for the equipment being used in the design. Certifications are required with the proposal at time of bid.

B. Installation: Contractor must have a valid FCC issued General Radio Operators License, and equipment manufacture certification. Certifications are required with the proposal at time of bid.

C. Cable Installation: Installation must follow TIA 568 requirements for structure cabling and support.

D. Testing: RL testing of all cables is required. Technicians performing RL testing must have a valid certification. Certifications are required with the proposal at time of bid.

E. System Commissioning: Commissioning agent must have a valid FCC issued General Radio Operators License, and equipment manufacture certification. Data collection is required to show system meets required radio coverage. Certifications are required with the proposal at time of bid.

F. Permitting: Contractor is responsible for all permitting.

1.04 CODES AND STANDARDS

A. The work shall be performed by competent craftsmen skilled in the trade involved and shall be done in a manner consistent with normal industry standards. All work shall conform to all applicable sections of currently adopted editions of the codes and standards listed below or the codes, standards and specifications published by the organizations listed below:
   1. National Fire Protection Association (NFPA 1, Annex O).
   2. National Electrical Code (NEC), Latest Edition.
   3. International Fire Code (IFC, 2021), Section 510.
   4. National Electrical Manufacturer's Association (NEMA).
   5. FCC Compliance, FCC 47 CFR 90.219 (2007)
   6. State and local codes.

1.05 REFERENCE STANDARDS

A. NFPA 1 - Fire Code; 2024.

END OF SECTION 275320

SECTION 281300
ACCESS CONTROL

PART 1 GENERAL

1.01 REFERENCE STANDARDS

A. IEEE 1100 - IEEE Recommended Practice for Powering and Grounding Electronic Equipment; 2005.

B. ISO 9000 - Quality Management Systems -- Fundamentals and Vocabulary; 2015.

C. NECA 1 - Standard for Good Workmanship in Electrical Construction; 2015.

D. NEMA 250 - Enclosures for Electrical Equipment (1000 Volts Maximum); 2020.

E. NFPA 70 - National Electrical Code; Most Recent Edition Adopted by Authority Having Jurisdiction, Including All Applicable Amendments and Supplements.

F. UL 294 - Access Control System Units; Current Edition, Including All Revisions.

G. UL 924 - Emergency Lighting and Power Equipment; Current Edition, Including All Revisions.

1.02 RELATED DOCUMENTS

A. Drawings and general provisions of the Contract, including General and Supplementary Conditions and Division 01 Specification Sections, apply to this Section.

1.03 SUMMARY

A. This project includes the access control systems including all components and licenses for integration into the main campus networked S2 enterprise system.

B. Section Includes:
   1. Security access central-control station.
   2. One or more security access networked workstations.
   3. Connection into existing security access operating system and application software.
   4. New licenses
   5. Readers
   6. Door Controllers
   7. Door Position Switches
   8. Power supplies
   9. Security access controllers connected to high-speed electronic-data transmission network.

1.04 DEFINITIONS

A. CCTV: Closed-circuit television.

B. CPU: Central processing unit.

C. Credential: Data assigned to an entity and used to identify that entity.

D. DPI: Dots per inch.

E. DTS: Digital Termination Service. A microwave-based, line-of-sight communication provided directly to the end user.

F. GFI: Ground fault interrupter.

G. Identifier: A credential card; keypad personal identification number; or code, biometric characteristic, or other unique identification entered as data into the entry-control database for the purpose of identifying an individual. Where this term is presented with an initial capital letter, this definition applies.

H. I/O: Input/Output.

I. LAN: Local area network.

J. Location: A Location on the network having a PC-to-controller communications link, with additional controllers at the Location connected to the PC-to-controller link with a TIA 485-A communications loop. Where this term is presented with an initial capital letter, this definition

applies.

K. PC: Personal computer. Applies to the central station, workstations, and file servers.

L. PCI Bus: Peripheral Component Interconnect. A peripheral bus providing a high-speed data path between the CPU and the peripheral devices such as a monitor, disk drive, or network.

M. PDF: Portable Document Format. The file format used by the Acrobat document-exchange-system software from Adobe.

N. RAS: Remote access services.

O. RF: Radio frequency.

P. ROM: Read-only memory. ROM data are maintained through losses of power.

Q. TCP/IP: Transport control protocol/Internet protocol incorporated into Microsoft Windows.

R. TWAIN: Technology without an Interesting Name. A programming interface that lets a graphics application, such as an image editing program or desktop publishing program, activate a scanner, frame grabber, or other image-capturing device.

S. UPS: Uninterruptible power supply.

T. USB: Universal serial bus.

U. WAN: Wide area network.

V. WAV: The digital audio format used in Microsoft Windows.

W. WMP: Windows media player.

X. Wiegand: Patented magnetic principle that uses specially treated wires embedded in the credential card.

Y. Windows: Operating system by Microsoft Corporation.

Z. Workstation: A PC with software that is configured for specific, limited security-system functions.

1.05 ACTION SUBMITTALS

A. Product Data: For each type of product indicated. Include rated capacities, operating characteristics, and furnished specialties and accessories. Reference each product to a location on Drawings.

B. Shop Drawings: Include plans, elevations, sections, details, and attachments to other work.
   1. Floorplan layout showing device and panel locations
   2. Diagrams for access control panel including all components to scale
   3. Detailed wiring diagrams
   4. System labeling schedules
   5. Detailed Wiring Diagrams. For power, signal, and control wiring
   6. Power Supply and Battery Calculations

C. Samples: Submit sample access control panel build.

1.06 CLOSEOUT SUBMITTALS

A. Operation and Maintenance Data: For security system to include in emergency, operation, and maintenance manuals. In addition to items specified in Section 017823 "Operation and Maintenance Data," include the following:
   1. Hard copies of manufacturer's specification sheets, operating specifications, design guides, user's guides for software and hardware, and PDF files on USB Drive of the hard-copy submittal.

1.07 QUALITY ASSURANCE

A. Installer Qualifications: An employer of workers factory trained and approved by manufacturer.

B. Source Limitations: Obtain central station, workstations, controllers, Identifier readers, and all software through one source from single manufacturer.

C. Electrical Components, Devices, and Accessories: Listed and labeled as defined in NFPA 70, by a qualified testing agency, and marked for intended location and application.

D. Comply with NFPA 70, "National Electrical Code."

1.08 DELIVERY, STORAGE, AND HANDLING

A. Central Station, Workstations, and Controllers:
   1. Store in temperature- and humidity-controlled environment in original manufacturer's sealed containers. Maintain ambient temperature between 50 and 85 degrees Fahrenheit (29.44 degrees Celsius), and not more than 80 percent relative humidity, noncondensing.
   2. Open each container; verify contents against packing list; and file copy of packing list, complete with container identification, for inclusion in operation and maintenance data.
   3. Mark packing list with the same designations assigned to materials and equipment for recording in the system labeling schedules that are generated by software specified in "Cable and Asset Management Software" Article.
   4. Save original manufacturer's containers and packing materials and deliver as directed under provisions covering extra materials.

1.09 PROJECT CONDITIONS

A. Environmental Conditions: System shall be capable of withstanding the following environmental conditions without mechanical or electrical damage or degradation of operating capability:
   1. Control Station: Rated for continuous operation in ambient conditions of 60 to 85 degrees Fahrenheit (29.44 degrees Celsius) and a relative humidity of 20 to 80 percent, noncondensing.
   2. Indoor, Controlled Environment: NEMA 250, Type 1 enclosure. System components, except the central-station control unit, installed in indoor environments shall be rated for continuous operation in ambient conditions of 36 to 122 degrees Fahrenheit (50 degrees Celsius) dry bulb and 20 to 90 percent relative humidity, noncondensing.
   3. Indoor, Uncontrolled Environment: NEMA 250, Type 1 enclosures. System components installed in indoor environments shall be rated for continuous operation in ambient conditions of 0 to 122 degrees Fahrenheit (50 degrees Celsius) dry bulb and 20 to 90 percent relative humidity, noncondensing.
   4. Outdoor Environment: NEMA 250, NEMA 250, Type 3R enclosures. System components installed in locations exposed to weather shall be rated for continuous operation in ambient conditions of minus 30 to plus 122 degrees Fahrenheit (50 degrees Celsius) dry bulb and 20 to 90 percent relative humidity, condensing. Rate for continuous operation where exposed to rain as specified in NEMA 250, winds up to 85 mph (137 km/h) and snow cover up to 24 inches (609.6 mm) thick.

PART 2 PRODUCTS

2.01 MANUFACTURERS & INSTALLERS

1. Manufacturers: Subject to compliance with requirements, provide products by the following:
   a. Mercury/S2 Security Corporation
2. Installers: Subject to compliance with the requirements, system shall be installed by one of the following:
   a. Stone Security
   b. Security 101
   c. Avtec
   d. Wasatch Controls
   e. Convergint

2.02 GENERAL

A. The S2 NetBox®/NetBox®VR/Enterprise® Security Management System is an existing campus server security system currently in place.

B. The system shall be implemented through network appliance architecture with a three-tiered modular hardware hierarchy and embedded three-tier software architecture.
   1. The network appliance shall be capable of running on an existing TCP/IP network and shall be accessible, configurable, and manageable from any network-connected PC with a browser.
   2. Browser access for configuration and administration of the system shall be possible from a PC on the same subnet, through routers and gateways from other subnets, and from the Internet. Control and management of the system shall therefore be geographically independent.
   3. Security of the data communicated over the network to and from the browser, Network Controller, and nodes shall be protected by encryption (SSL 128-bit) or authentication (SHA-1).
   4. The top hardware tier is the Network Controller. Embedded on the Network Controller are an operating system, a web server, security application software, and the database of personnel and system activity. Converged Video Access systems shall also include fully functional network video recorder.
   5. The middle hardware tier is the Network Node. The Network Node shall make and manage access control decisions with data provided by the Network Controller, and it shall manage the communication between the Network Controller and Application blades connected to the system's inputs, outputs, and readers. This modular design makes it possible, even during network downtime, for the system to continue to manage access control and store system activity logs. When network connectivity is re-established, the system activity logs are automatically re-integrated.
   6. The bottom hardware tier is the Application Blades. Four unique Application blades shall be available:
      a. Access Control Blade: shall support two readers, four supervised inputs, and four relay outputs.
         1) Alarm Input Blade: shall support eight supervised inputs.
         2) Relay Output Blade: shall support eight relay outputs.
         3) Temperature Blade: shall support eight analog temperature sensor inputs.

C. The S2 system shall integrate, within a browser interface, access control, alarm monitoring, video monitoring, and temperature monitoring applications. These applications shall be embedded in a three-tier software architecture.
   1. The database tier shall use PostgreSQL. PostgreSQL is a full featured, high performance database management system that supports ODBC. This shall provide a small footprint, low administration, and a high reliability relational database that is embedded without requiring the use of a separate PC server.
   2. The web server tier shall be based on an Apache™ embedded web server. This shall provide a graphically rich security management application through a standard web browser.
   3. The security application software tier contains the business logic. This application shall also be embedded on the controller and requires no additional memory or processing power.
   4. This three tiered embedded software design runs within an embedded Linux Ubuntu operating system and shall require no client-side software other than a web browser.

D. All equipment and materials used shall be standard components, regularly manufactured, and regularly utilized in the manufacturer's system.

E. All S2 systems and components shall have been thoroughly tested and proven in actual use.

F. All S2 systems and components shall be provided with an explicit manufacturer warranty of one year for software and two years for hardware.

2.03 HARDWARE REQUIREMENTS

A. The Application blades shall interface with the Network Controller through the Network Node. The Application blades shall be blade-style circuit cards. There shall be four types of Application blades:
   1. Access Control blade: shall support 2 readers (input devices such as keypads, RFID devices or Biometric readers), 4 supervised inputs and 4 relay outputs.
   2. Supervised Input blade: shall support 8 supervised inputs. Supervised input connectors are 2-pin. The system shall support a wide variety of input supervision types such as: no-resistor, one resistor or two resistor including normally-open circuit and normally-closed circuits.
   3. Relay Output blade: shall support 8 relay outputs. Outputs are form C relay represented by 3-pin connectors. Both normally-open circuit and normally-closed circuit output devices are supported. The relay outputs shall support any output devices that operate on the following maximum electrical ratings: 30 Volts DC or AC, 2.5 Amps inductive or 5.0 Amps non-inductive.
   4. Temperature blade: shall support 8 analog temperature sensor inputs. Temperature range shall be 32° to 158° F (0° to 70° C). Temperature precision within that range shall be ±1.0° F (±0.5° C).

B. NETWORK CONTROLLER, NODE, AND APPLICATION BLADE REQUIREMENTS

C. Access Control blade - The access control blade shall receive power via the ribbon cable bus directly from the Node Blade. The access blade shall supply up to 500 mA of power to one reader or 250 mA of power to each of two readers.
   1. 2
   2. 500 feet (15240 cm) (18 AWG twisted, shielded)
   3. 500 mA
   4. 4
   5. 2000 feet (60960 cm) (22 AWG twisted, shielded)
   6. 4
   7. Determined by the peripheral device

D. Input blade - The input blade shall receive power via the ribbon cable bus directly from the Node Blade. It shall support a wide variety of input supervision types including normally-open circuit and normally-closed circuits, and zero, one or two resistor configurations.
   1. 8
   2. 2000 feet (60960 cm) (22 AWG twisted, shielded)

E. Output blade - The output blade shall receive power via the ribbon cable bus directly from the Node Blade. Both normally-open circuit and normally-closed circuit output devices shall be supported. The relay outputs shall support any output devices that operate on the following maximum electrical ratings: 30 Volts DC or AC, 2.5 Amps inductive or 5.0 Amps non-inductive.
   1. 8
   2. 2000 feet (60960 cm) (22 AWG twisted, shielded)

F. S2 Temperature blade - The temperature blade shall receive power via the ribbon cable bus directly from the Node Blade.
   1. 8
   2. 1000 feet (30480 cm) (18 AWG twisted, shielded)

2.04 SOFTWARE REQUIREMENTS

   a. S2 Software Licensing: Include an additional new 64 license block for the existing campus network controller.

2.05 VIDEO MANAGEMENT INTEGRATION

2.06 THE SYSTEM SHALL BE COMPATIBLE AND CAPABLE OF VIDEO MANAGEMENT INTEGRATION; HOWEVER, THIS WILL NOT BE UTILIZED FOR THE PROJECT AT THIS TIME

A. .

2.07 CERTIFICATIONS

A. UL 294 listed.

B. ISO 9000 listed.

2.08 SURGE AND TAMPER PROTECTION

A. Surge Protection: Protect components from voltage surges originating external to equipment housing and entering through power, communication, signal, control, or sensing leads. Include surge protection for external wiring of each conductor-entry connection to components.
   1. Minimum Protection for Power Connections 120 V and More: Auxiliary panel suppressors complying with requirements in Section 264313 "Surge Protection for Low-Voltage Electrical Power Circuits."
   2. Minimum Protection for Communication, Signal, Control, and Low-Voltage Power Connections: Comply with requirements in Section 264313 "Surge Protection for Low-Voltage Electrical Power Circuits" as recommended by manufacturer for type of line being protected.

B. Tamper Protection: Tamper switches on enclosures, control units, pull boxes, junction boxes, cabinets, and other system components shall initiate a tamper-alarm signal when unit is opened or partially disassembled. Control-station control-unit alarm display shall identify tamper alarms and indicate locations.

C. Battery Backup: Sealed, lead acid; sized to provide run time during a power outage of 90 minutes, complying with UL 924.

2.09 CARD READERS, CREDENTIAL CARDS, KEYPADS, AND HARDWARE

A. Readers: The quantities and types of Readers shall be determined by the contractor based upon the requirement to provide a fully operational system, as per the intent of the specification, as shown on the drawings and recommended by the manufacturer. Although some slight differences in configuration of the system can be expected depending upon which product is chosen, the system must operate in a substantially identical manner from the point of view of the user. It must be possible to mix different card readers, as well as card formats into the same system; additionally, it must be possible to mix different card readers as well as card formats on the same door controller. As a minimum, the following reader types shall be supported in each Door Controller. The ACS shall support all of the following access control readers, devices and card technologies:
   1. Compatible Magnetic stripe key or card insertion reader
   2. ABA magnetic stripe swipe reader
   3. Proximity readers to the system and consistent with customer existing readers.
   4. Wiegand swipe readers (26 and 32 bit formats)
   5. Touch Sensor Technology

B. Proximity Readers: The reader shall be proximity type:
   1. HID iClass Elite Key
   2. It shall read the ID number of the card or tag when presented to the surface of the reader without physical contact.
   3. When installed according to manufacturer’s instructions, primary operation of the reader shall be unidirectional; that is, having its greatest read range from the front surface with the minimum reading range of cards and tags at its back surface.
   4. The following reader styles shall be available and may be used interchangeably throughout the system:
      a. A unitized indoor or outdoor reader with a read antenna and necessary electronics for transmission of the card/tag code to the system all contained in a single package. Read range shall be nominally 6 inches (152.4 mm) from the rear surface when used with a card. Maximum dimensions shall be 4.6 inches (116.84 mm) high x 5.5 inches (139.7 mm) wide x 1.4 inches (35.56 mm) thick. The reader may be mounted directly on any material including metal without the use of standoffs, or concealed behind any

building material except metal.

5. An LED on the front surface of the reader shall indicate to the user that the card or tag presented to the reader has been read. An audio beep tone to indicate that the card has been read shall be available as an option.
6. No special housing shall be required for those readers designated for outdoor use.
7. Electrical connections from the reader assembly to the system interface or CPU shall be via color-coded, five conductor, #22 AWG shielded cable (six conductor optional audio tone). No special connectors or coaxial cable shall be required.
8. Wiring from the reader assembly to the system interface or CPU may be run inside metal conduit or EMT, as may be required by electrical codes.
9. Any of the readers shall be capable of being powered by a 1.2 amp-hour battery for at least five hours.
10. Accidental or intentional transmission of radio frequency signals into the reader shall not compromise the system.
11. The reader shall function in the access control system's normal or anti-passback mode without changes to the reader.
12. The reader shall contain no internal code matching or memory devices to operate with a group of ID numbers.
13. Read head operating temperature ranges shall be:
    a. Indor 0 to + 50 degree C
    b. Outdor -30 to +65 degrees C
14. Damage to the reader shall not damage any other part of the access control system.
15. The access control system readers shall have the capability to accept codes from any of the following proximity devices:
    a. A molded plastic credit card size maximum dimensions of 3.41 inches (86.61 mm) x 2.14 inches x .11 inches (8.7 cm x 5.4 cm x .28 cm), having a maximum weight of .48 ounces (13.5g), and a punched slot for a strap or clip.
    b. A "key ring tag" having maximum dimensions of 2.2 inches (55.88 mm) x 1.3 inches x .25 inches (5.6 cm x 3.3 cm x .6 cm) and a maximum weight of .36 ounces (9.9g), and having an eyelet for attachment to a key ring.
    c. The presence of small metal objects such as keys or coins near the card or tag shall not alter the code read by the reader or prevent the code form being read by the reader.
    d. The individual card or tag shall be derived from a population of at least 134 million unique codes.
    e. Cards or tags shall be sequentially numbered. The user may specify codes or numbers. Exact replacements for cards or tags, which may be lost, damaged, or stolen shall be available upon request. Cards and tags having the same number shall also be available upon request.
    f. Cards, key ring tags, or badge tags may be used interchangeably and shall be compatible with all readers in the system, regardless of the reader's physical size or style, and without any code matching or memory devices in the reader.
    g. Manufacturer shall guarantee the availability of additional quantities of cards or tags having the same facility code for a period of at least five (5) years.

C. Door Position Switch/Door Contact shall meet the following requirements:
1. UL Listed
2. ¾" diameter recessed magnetic contacts with factory installed wire leads, minimum 1 feet (30.48 cm) long – 22AWG.
3. Self-lock mounting
4. Installation shall include the application of mounting compound for added adhesive strength.
5. Where field conditions prohibit the use of a recessed magnetic contact, surface mounted switch shall be used.
    a. Type: Interior/Exterior, Sentrol 1078 Series or equivalent

b. Gate/Overhead Door, Sentrol 2500 Series (w/bracket) or equivalent
Operation: N.O. and N.C. Magnetic contacts

D. Request to Exit Switch shall meet the following requirements:
1. 1 3/4" diameter opaque colored mushroom cap push button
2. Type: Rutherford Controls 908 Series or equivalent.
Operation: Momentary N.O. and N.C. DPDB Circuits

E. Proximity Cards: provided by Owner.

F. Power Supplies shall meet the following requirements:
1. Power supply rated for the total load of the control station for all input and output modules energized, without diversity plus 25% spare capacity. This shall include power supply adequate for all electrified door lock sets.
2. Protection against power surges and over voltages.
3. Battery backup to support panel memory for a minimum of 72 hours.
4. Spare fuses.
5. 24 volt AC/DC control circuits throughout.

2.10 CABLES

A. Access Controlled Door Multi-pair Composite Cable – Installed by Owner, Terminated by Contractor
1. Equal to Windy City Wire #446100

B. Plenum-Type, TIA 232-F Cables:
1. Two pairs, No. 22 AWG, stranded (7x30) tinned copper conductors, plastic insulation, and individual aluminum-foil/polyester-tape shielded pairs with 100 percent shield coverage; plastic jacket.
2. Pairs are cabled on common axis with No. 24 AWG, stranded (7x32) tinned copper drain wire.
3. NFPA 70, Type CMP.
4. Flame Resistance: NFPA 262 flame test.

C. Plenum-Type, TIA 485-A Cables:
1. Two pairs, No. 22 AWG, stranded (7x30) tinned copper conductors, fluorinated-ethylene-propylene insulation, unshielded, and fluorinated-ethylene-propylene jacket.
2. NFPA 70, Type CMP.
3. Flame Resistance: NFPA 262 flame test.

D. Paired, Plenum-Type, Input Cables:
1. One pair, twisted, No. 22 AWG, stranded (7x30) tinned copper conductors, fluorinated-ethylene-propylene insulation, aluminum-foil/polyester-tape shield (foil side out), with No. 22 AWG drain wire, 100 percent shield coverage, and plastic jacket.
2. NFPA 70, Type CMP.
3. Flame Resistance: NFPA 262 flame test.

E. Paired, Plenum-Type, AC Transformer Cables:
1. One pair, twisted, No. 18 AWG, stranded (19x30) tinned copper conductors, fluorinated-ethylene-propylene insulation, unshielded, and plastic jacket.
2. NFPA 70, Type CMP.
3. Flame Resistance: NFPA 262 flame test.

F. LAN Cabling:
1. Category 6, plenum rated cabling.

G. TRANSFORMERS
1. NFPA 70, Class II control transformers, NRTL listed. Transformers for security access-control system shall not be shared with any other system.

PART 3 EXECUTION

3.01 EXAMINATION

A. Examine pathway elements intended for cables. Check raceways, cable trays, and other elements for compliance with space allocations, installation tolerances, hazards to cable installation, and other conditions affecting installation.

B. Examine roughing-in for LAN and control cable conduit systems to PCs, controllers, card readers, and other cable-connected devices to verify actual locations of conduit and back boxes before device installation.

C. Proceed with installation only after unsatisfactory conditions have been corrected.

3.02 PREPARATION

A. Comply with recommendations in SIA CP-01.

B. Comply with TIA/EIA 606-A, "Administration Standard for Commercial Telecommunications Infrastructure."

C. Obtain detailed Project planning forms from manufacturer of access-control system; develop custom forms to suit Project. Fill in all data available from Project plans and specifications and publish as Project planning documents for review and approval.
   1. Record setup data for control station and workstations.
   2. For each Location, record setup of controller features and access requirements.
   3. Propose start and stop times for time zones and holidays, and match up access levels for doors.
   4. Set up groups, facility codes, linking, and list inputs and outputs for each controller.
   5. Assign action message names and compose messages.
   6. Set up alarms. Establish interlocks between alarms, intruder detection, and video surveillance features.
   7. Prepare and install alarm graphic maps.
   8. Develop user-defined fields.
   9. Develop screen layout formats.
   10. Propose setups for guard tours and key control.
   11. Discuss badge layout options; design badges.
   12. Complete system diagnostics and operation verification.
   13. Prepare a specific plan for system testing, startup, and demonstration.
   14. Develop acceptance test concept and, on approval, develop specifics of the test.

D. The existing access control system must remain fully operational until the new access control system work is complete, fully operational, and approved by Owner.

E. No more than a single door controller may be down simultaneously during construction.

F. All electrified doors must be fully operations (including programming) prior to the Contractor leaving the job site at the end of each work day.

G. Weekend and After hours work shall be performed for select activities and areas as required to complete the project at the discretion of the Owner.

H. In meetings with Engineer and Owner, present Project planning documents and review, adjust, and prepare final setup documents. Use final documents to set up system software.

I. Contractor to program and configure new S2 system to as indicated or as directed by Owner. For example:
   1. All card holders should be granted the same access as before construction began.
   2. All inputs to the system should connect to and produce the same output afterward as they did before construction began.
   3. All electrified doors shall be locked and released (opened) the same as before construction began.

J. Emergency power shall be supplied to each door controller with the same or greater capacity of battery backup power supply. The Contractor shall be responsible to provide new breakers, conduit, wire, and other materials and labor for the emergency power to each door controller.

3.03 CABLING

A. Comply with NECA 1, "Good Workmanship in Electrical Construction."

B. Wiring Method: Install wiring in raceway and cable tray except within consoles, cabinets, desks, and counters. Conceal raceway and wiring except in unfinished spaces.

C. Install LAN cables using techniques, practices, and methods that are consistent with Category 6 rating of components and fiber-optic rating of components, and that ensure Category 6 and fiber-optic performance of completed and linked signal paths, end to end.

D. Boxes and enclosures containing security-system components or cabling, and which are easily accessible to employees or to the public, shall be provided with a lock. Boxes above ceiling level in occupied areas of the building shall not be considered accessible. Junction boxes and small device enclosures below ceiling level and easily accessible to employees or the public shall be covered with a suitable cover plate and secured with tamperproof screws.

E. Install end-of-line resistors at the field device location and not at the controller or panel location.

3.04 CABLE APPLICATION

A. Comply with TIA 569-B, "Commercial Building Standard for Telecommunications Pathways and Spaces."

B. Cable application requirements are minimum requirements and shall be exceeded if recommended or required by manufacturer of system hardware.

C. TIA 232-F Cabling: Install at a maximum distance of 50 feet (1524 cm).

D. TIA 485-A Cabling: Install at a maximum distance of 4000 feet (121920 cm).

E. Card Readers and Keypads:
   1. Install number of conductor pairs recommended by manufacturer for the functions specified.
   2. Unless manufacturer recommends larger conductors, install No. 22 AWG wire if maximum distance from controller to the reader is 250 feet (7620 cm), and install No. 20 AWG wire if maximum distance is 500 feet (15240 cm).
   3. For greater distances, install "extender" or "repeater" modules recommended by manufacturer of the controller.
   4. Install minimum No. 18 AWG shielded cable to readers and keypads that draw 50 mA or more.

F. Install minimum No. 16 AWG cable from controller to electrically powered locks. Do not exceed 250 feet (7620 cm).

G. Install minimum No. 18 AWG ac power wire from transformer to controller, with a maximum distance of 25 feet (762 cm).

3.05 GROUNDING

A. Comply with Section 260526 "Grounding and Bonding for Electrical Systems."

B. Comply with IEEE 1100, "Recommended Practice for Power and Grounding Electronic Equipment."

C. Ground cable shields, drain conductors, and equipment to eliminate shock hazard and to minimize ground loops, common-mode returns, noise pickup, cross talk, and other impairments.

D. Bond shields and drain conductors to ground at only one point in each circuit.

E. Signal Ground:
   1. Terminal: Locate in each equipment room and wiring closet; isolate from power system and equipment grounding.
   2. Bus: Mount on wall of main equipment room with standoff insulators.

3. Backbone Cable: Extend from signal ground bus to signal ground terminal in each equipment room and wiring closet.

3.06 INSTALLATION

A. Push Buttons: Where multiple push buttons are housed within a single switch enclosure, they shall be stacked vertically with each push-button switch labeled with 1/4-inch- (6.4-mm-) high text and symbols as required. Push-button switches shall be connected to the controller associated with the portal to which they are applied, and shall operate the appropriate electric strike, electric bolt, or other facility release device.

B. Connect all devices into the access control system including, but not limited to:
   1. Card readers
   2. Keypads
   3. Push buttons
   4. Biometric readers.
   5. Electrified Locks (mag-locks, electric strikes, etc.)
   6. Door Contacts
   7. Notification Lights
   8. Discrete Inputs
   9. Discrete Outputs
   10. Fire Alarm Inputs
   11. -80 Freezer Alarm

C. Wire Splicing: Any wire splicing must connect the current wire to an equal or greater quality and matching size.

D. Provide 2x2 ceiling access hatches as required to gain access to inaccessible ceilings where work is required under the scope of this project.

3.07 IDENTIFICATION

A. In addition to requirements in this article, comply with applicable requirements in Section 260553 "Identification for Electrical Systems" and with TIA/EIA 606-A.

B. Label each terminal strip and screw terminal in each cabinet, rack, or panel.
   1. All wiring conductors connected to terminal strips shall be individually numbered, and each cable or wiring group being extended from a panel or cabinet to a building-mounted device shall be identified with the name and number of the particular device as shown.
   2. Each wire connected to building-mounted devices is not required to be numbered at the device if the color of the wire is consistent with the associated wire connected and numbered within the panel or cabinet.

C. Label each controller and device with a unique identification tag, redline ID on as-built contractor red-lines and update all programming/software to reflect the unique ID for each device within the system.

D. At completion, software and drawings shall reflect as-built conditions.

3.08 SYSTEM SOFTWARE AND HARDWARE

A. Develop, install, and test software and hardware, and perform database tests for the complete and proper operation of systems involved. Assign software license to Owner.

3.09 FIELD QUALITY CONTROL

A. Perform tests and inspections.
   1. Manufacturer's Field Service: Engage a factory-authorized service representative to inspect components, assemblies, and equipment installations, including connections, and to assist in testing.

B. Tests and Inspections:
   1. LAN Cable Procedures: Inspect for physical damage and test each conductor signal path for continuity and shorts. Use Class 2, bidirectional, Category 5 tester. Test for faulty

connectors, splices, and terminations. Test according to TIA/EIA 568-B.1, "Commercial Building Telecommunications Cabling Standards - Part 1: General Requirements." Link performance for UTP cables must comply with minimum criteria in TIA/EIA 568-B.1.

2. Test each circuit and component of each system. Tests shall include, but are not limited to, measurements of power-supply output under maximum load, signal loop resistance, and leakage to ground where applicable. System components with battery backup shall be operated on battery power for a period of not less than 10 percent of the calculated battery operating time. Provide special equipment and software if testing requires special or dedicated equipment.
3. Operational Test: After installation of cables and connectors, demonstrate product capability and compliance with requirements. Test each signal path for end-to-end performance from each end of all pairs installed. Remove temporary connections when tests have been satisfactorily completed.

C. Devices and circuits will be considered defective if they do not pass tests and inspections.

D. Prepare test and inspection reports.

3.10 STARTUP SERVICE

A. Engage a factory-authorized service representative to supervise and assist with startup service.
1. Complete installation and startup checks according to approved procedures that were developed in "Preparation" Article and with manufacturer's written instructions.
2. Enroll and prepare badges and access cards for Owner's operators, management, and security personnel.

3.11 DEMONSTRATION

A. Train Owner's maintenance personnel to adjust, operate, and maintain security access system.

END OF SECTION 281300

SECTION 282300
VIDEO SURVEILLANCE

PART 1 GENERAL

1.01 REFERENCE STANDARDS

A. UL 639 - Intrusion-Detection Units; Current Edition, Including All Revisions.

1.02 RELATED DOCUMENTS

A. Section includes a video surveillance system consisting of cameras, software installation, configuration, and licensing. Network electronics shall be provided by the Owner. Cabling and terminations shall be provided by Section 27 10 00.

1.03 SUMMARY

A. Section includes a video surveillance system consisting of cameras, software installation, configuration, and licensing.

B. Statement of Work: The work of this section includes, but is not necessarily limited to, the following design and construction:

C. The Contractor shall provide comprehensive training of system operation.

1.04 DEFINITIONS

A. AGC: Automatic gain control.

B. BNC: Bayonet Neill-Concelman - type of connector.

C. B/W: Black and white.

D. CCD: Charge-coupled device.

E. FTP: File transfer protocol.

F. IP: Internet protocol.

G. LAN: Local area network.

H. MPEG: Moving picture experts group.

I. NTSC: National Television System Committee.

J. PC: Personal computer.

K. PTZ: Pan-tilt-zoom.

L. RAID: Redundant array of independent disks.

M. TCP: Transmission control protocol - connects hosts on the Internet.

N. UPS: Uninterruptible power supply.

O. WAN: Wide area network.

1.05 INSTALLER QUALIFICATION

A. Axis Gold Partner or higher at time of bid.

B. Axis Pro Certified for at least 3 but preferably 5 installers at time of bid.

C. Milestone Certified Installation Technician (MCIT) at time of bid.
   1. Contractor submit at time of bid all required certifications as listed above.
   2. The contractor shall staff each installation crew with the appropriate number of trained personnel.

1.06 APPROVED INSTALLERS

A. Stone Security – Campus Standard

B. Convergint

C. Avtec

1.07 PERFORMANCE REQUIREMENTS

A. Seismic Performance: Video surveillance system shall withstand the effects of earthquake motions determined according to ASCE/SEI 7.
   1. The term "withstand" means "the unit will remain in place without separation of any parts from the device when subjected to the seismic forces specified and the unit will be fully operational after the seismic event."

B. Contractor must meet certain design criteria that is listed on the construction drawings. Failure to meet these requirements will result in the contractor replacing, or adding additional cameras at no additional cost to the owner.

C. Product Data: For each type of product indicated. Include dimensions and data on features, performance, electrical characteristics, ratings, and finishes.

D. Equipment List: Include every piece of equipment by model number, manufacturer, serial number, location, and date of original installation. Add pretesting record of each piece of equipment, listing name of person testing, date of test, set points of adjustments, name and description of the view of preset positions, description of alarms, and description of unit output responses to an alarm.

1.08 INFORMATIONAL SUBMITTALS

A. Seismic Qualification Certificates: For video surveillance, cameras, camera-supporting equipment, accessories, and components, from manufacturer.
   1. Basis for Certification: Indicate whether withstand certification is based on actual test of assembled components or on calculation.
   2. Dimensioned Outline Drawings of Equipment Unit: Identify center of gravity and locate and describe mounting and anchorage provisions.
   3. Detailed description of equipment anchorage devices on which the certification is based and their installation requirements.

B. Field quality-control reports.

C. Warranty: One year from substantial completion.

1.09 CLOSEOUT SUBMITTALS

A. Operation and Maintenance Data: For cameras, power supplies, infrared illuminators, monitors, videotape recorders, digital video recorders, video switches, and control-station components to include in emergency, operation, and maintenance manuals. Include the following:
   1. Lists of spare parts and replacement components recommended to be stored at the site for ready access.

1.10 QUALITY ASSURANCE

A. Electrical Components, Devices, and Accessories: Listed and labeled as defined in NFPA 70, by a qualified testing agency, and marked for intended location and application.

B. Comply with NECA 1.

C. Comply with NFPA 70.

D. Electronic data exchange between video surveillance system with an access-control system shall comply with SIA TVAC.

1.11 WARRANTY

A. Special Warranty: Manufacturer's standard form in which manufacturer agrees to repair or replace components of cameras, equipment related to camera operation, and control-station equipment that fail in materials or workmanship within specified warranty period.
   1. Warranty Period: One year from date of Substantial Completion.

PART 2 PRODUCTS

2.01 SYSTEM REQUIREMENTS

A. Video-signal format shall comply with NTSC standard.

B. Surge Protection: Protect components from voltage surges originating external to equipment housing and entering through power, communication, signal, control, or sensing leads. Include surge protection for external wiring of each conductor's entry connection to components.
   1. Minimum Protection for Power Connections 120 V and More: Auxiliary panel suppressors complying with requirements in Section 264313 "Surge Protection for Low-Voltage Electrical Power Circuits."
   2. Minimum Protection for Communication, Signal, Control, and Low-Voltage Power Connections: Comply with requirements in Section 264313 "Surge Protection for Low-Voltage Electrical Power Circuits" as recommended by manufacturer for type of line being protected.

C. Tamper Protection: Tamper switches on enclosures, control units, pull boxes, junction boxes, cabinets, and other system components shall initiate a tamper-alarm signal when unit is opened or partially disassembled. Control-station, control-unit alarm display shall identify tamper alarms and indicate locations.

D. Programming: provide all programming meeting Owners typical requirments.

2.02 STANDARD IP CAMERAS

A. Manufacturers: Subject to compliance with requirements, provide products by one of the following manufacturers:
   1. Axis

B. IP Cameras General (applies to all cameras)
   1. Must be fully compatible with the selected VMS system.
   2. Basis of design is Axis series cameras.
   3. Comply with UL 639.
   4. H.264 compression with full real time video frame rates.
   5. Signal-to Noise Ratio: not less than 50 dB, with camera AGC off.
   6. AGC, manually selectable on or off.
   7. Sensitivity: Camera shall provide usable images in low-light conditions, delivering an image at a scene illumination of .5 lux
   8. Sensitivity: Camera shall deliver 1-V peak-to-peak video signal at the minimum specified light level. Illumination for the test shall be with lamps rated at approximately 2200-K color temperature, and with camera AGC off.
   9. Frames per second: 60
   10. Motion sensors. Built in Digital
   11. Minimum 1920X1080P Resolution
   12. White Balance: Auto-tracing white balance, with manually settable fixed balance option.
   13. Provide vandal resistant housing for high risk areas where equipment bay be subject to physical violence (parking garages, exterior locations.)
   14. Provide Dome mounted cameras, wall mounted cameras, remote arm mounting as applicable for location.
   15. Scanning Synchronization: Determined by external synch over the network. Camera shall revert to internally generated synchronization on loss of external synch signal.
   16. Provide remote focusing capability.
   17. Provide image stabilization for all exterior cameras.

2.03 POWER SUPPLIES

A. Cameras are to be POE. POE source provided by the owner. Provide power supplies as required for any signal booster, fiber to Ethernet converters, etc. as required.

2.04 INFRARED ILLUMINATORS

A. Description: Lighting fixtures that emit light only in the infrared spectrum, suitable for use with cameras indicated, for nighttime surveillance, without emitting visible light.
   1. Field-Selectable Beam Patterns: Narrow, medium, and wide.
   2. Rated Lamp Life: More than 8000 hours.

3. Power Supply: 12-V ac/dc or 120-V ac.

B. Area Coverage: Illumination to 150 feet (4572 cm) in a narrow beam pattern.

C. Exterior housings shall be suitable for same environmental conditions as the associated camera.

2.05 CAMERA-SUPPORTING EQUIPMENT

A. Manfacturers: Subject to compliance with requirements, provide products by one of the following:
1. Axis

B. Minimum Load Rating: Rated for load in excess of the total weight supported times a minimum safety factor of two.

C. Mounting Brackets for Fixed Cameras: Type matched to items supported and mounting conditions. Include manual pan-and-tilt adjustment.

D. Protective Housings for Fixed Cameras: Steel or 6061 T6 aluminum enclosures with internal camera mounting and connecting provisions that are matched to camera/lens combination and mounting and installing arrangement of camera to be housed.
1. Camera Viewing Window: Polycarbonate or Lexan window, aligned with camera lens.
2. Alignment Provisions: Camera mounting shall provide for field aiming of camera and permit removal and reinstallation of camera lens without disturbing camera alignment.
3. Sun shield shall not interfere with normal airflow around the housing.
4. Mounting bracket and hardware for wall or ceiling mounting of the housing. Bracket shall be of same material as the housing; mounting hardware shall be stainless steel.
5. Finish: Housing and mounting bracket shall be factory finished using manufacturer's standard finishing process suitable for the environment.
6. Enclosure Rating: NEMA 4X or IP66 for external cameras.

E. Provide licensing for each camera.

PART 3 EXECUTION

3.01 EXAMINATION

A. Examine pathway elements intended for cables. Check raceways and other elements for compliance with space allocations, installation tolerance, hazards to camera installation, and other conditions affecting installation.

B. Examine roughing-in for LAN, and IP network before device installation.

C. Proceed with installation only after unsatisfactory conditions have been corrected.

3.02 INSTALLATION:

A. Hallways: Provide cameras that are designed to see down the entire length of hallways.

B. Lobbies and reception areas: cameras in these areas are to be either ceiling dome mounted cameras, or wall mounted cameras. The cameras are to have a wide enough lens so that reception desks, help desks, doors to these areas (as indicated), and casher locations are fully covered by the cameras. Quality shall be high enough to pick up facial features of the public that goes into these rooms.

C. Exterior cameras:
1. Pole mounted cameras: provide exterior rated dome cameras. See plans for description of coverage areas.
2. Wall mounted cameras: Provide exterior rated cameras. Provide lens that is appropriate for the far viewing, door coverage, or near wide angle coverage as is indicated on plans.
3. Cameras located 12’ AFF or below shall be vandal resistant.

3.03 WIRING

A. Comply with requirements in Section 260533 "Raceways and Boxes for Electrical Systems."

B. Wiring Method: Install cables in raceways unless otherwise indicated.

1. Except raceways are not required in accessible indoor ceiling spaces and attics.
2. Except raceways are not required in hollow gypsum board partitions.
3. Conceal raceways and wiring except in unfinished spaces.

C. Wiring within Enclosures: Bundle, lace, and train conductors to terminal points with no excess and without exceeding manufacturer's limitations on bending radii. Provide and use lacing bars and distribution spools.

D. Splices, Taps, and Terminations: For power and control wiring, use numbered terminal strips in junction, pull, and outlet boxes; terminal cabinets; and equipment enclosures. Tighten electrical connectors and terminals according to manufacturer's published torque-tightening values. If manufacturer's torque values are not indicated, use those specified in UL 486A-486B.

E. For LAN connection and fiber-optic and copper communication wiring, comply with Section 271300 "Communications Backbone Cabling" and Section 271500 "Communications Horizontal Cabling."

F. Grounding: Provide independent-signal circuit grounding recommended in writing by manufacturer.

3.04 VIDEO SURVEILLANCE SYSTEM INSTALLATION

A. Install cameras and infrared illuminators level and plumb.

B. Install cameras with 84-inch- (2134-mm-) minimum clear space below cameras and their mountings. Change type of mounting to achieve required clearance. Exterior camera mounted 12” below soffit or maximum height of building.

3.05 FIELD QUALITY CONTROL

A. Testing Agency: Engage a qualified testing agency to perform tests and inspections.

B. Manufacturer's Field Service: Engage a factory-authorized service representative to inspect, test, and adjust components, assemblies, and equipment installations, including connections.

C. Perform tests and inspections.
1. Manufacturer's Field Service: Engage a factory-authorized service representative to inspect components, assemblies, and equipment installations, including connections, and to assist in testing.

D. Tests and Inspections:
1. Inspection: Verify that units and controls are properly installed, connected, and labeled, and that interconnecting wires and terminals are identified.
2. Pretesting: Align and adjust system and pretest components, wiring, and functions to verify that they comply with specified requirements. Conduct tests at varying lighting levels, including day and night scenes as applicable. Prepare video-surveillance equipment for acceptance and operational testing as follows:
   a. Prepare equipment list described in "Informational Submittals" Article.
   b. Verify operation of auto-iris lenses.
   c. Set back-focus of fixed focal length lenses. At focus set to infinity, simulate nighttime lighting conditions by using a dark glass filter of a density that produces a clear image. Adjust until image is in focus with and without the filter.
   d. Set back-focus of zoom lenses. At focus set to infinity, simulate nighttime lighting conditions by using a dark glass filter of a density that produces a clear image. Additionally, set zoom to full wide angle and aim camera at an object 50 to 75 feet (2286 cm) away. Adjust until image is in focus from full wide angle to full telephoto, with the filter in place.
   e. Set and name all preset positions; consult Owner's personnel.
   f. Set sensitivity of motion detection.
   g. Connect and verify responses to alarms.
   h. Verify operation of control-station equipment.

3. Test Schedule: Schedule tests after pretesting has been successfully completed and system has been in normal functional operation for at least 14 days. Provide a minimum of 10 days' notice of test schedule.
4. Operational Tests: Perform operational system tests to verify that system complies with Specifications. Include all modes of system operation. Test equipment for proper operation in all functional modes.

E. Confirm camera images meet the project requirements and modify as required until they are met including but not limited to replacement of camera or components at no additional cost to the owner.

F. Video surveillance system will be considered defective if it does not pass tests and inspections.

G. Prepare test and inspection reports.

3.06 ADJUSTING

A. Occupancy Adjustments: When requested within 12 months of date of Substantial Completion, provide on-site assistance in adjusting system to suit actual occupied conditions. Provide up to two visits (6 hours on site per visit) to Project during other-than-normal occupancy hours for this purpose. Tasks shall include, but are not limited to, the following:
1. Check cable connections.
2. Check proper operation of cameras and lenses. Verify operation of auto-iris lenses and adjust back-focus as needed.
3. Adjust all preset positions; consult Owner's personnel.
4. Recommend changes to cameras, lenses, and associated equipment to improve Owner's use of video surveillance system.
5. Provide a written report of adjustments and recommendations.

3.07 CLEANING

A. Clean installed items using methods and materials recommended in writing by manufacturer.

B. Clean video-surveillance-system components, including camera-housing windows, lenses, and monitor screens.

3.08 DEMONSTRATION

A. Engage a factory-authorized service representative to train Owner's maintenance personnel to adjust, operate, and maintain video-surveillance equipment. Provide a minimum of 8 hours of training on the new software and “drag and drop” methods of arranging, viewing and selection of camera location.

END OF SECTION 282300

SECTION 283111
DIGITAL, ADDRESSABLE FIRE-ALARM SYSTEM

PART 1 GENERAL

1.01 REFERENCE STANDARDS

A. NFPA 72 - National Fire Alarm and Signaling Code; Most Recent Edition Cited by Referring Code or Reference Standard.

1.02 RELATED DOCUMENTS

A. Drawings and general provisions of the Contract, including General and Supplementary Conditions and Division 01 Specification Sections, apply to this Section.

1.03 SUMMARY

A. Provide a voice evacuation alarm based notification system.

B. Section Includes:
   1. Fire-alarm control unit.
   2. Manual fire-alarm boxes.
   3. System smoke detectors.
   4. Heat detectors.
   5. Notification appliances.
   6. Magnetic door holders.
   7. Remote annunciator.
   8. Addressable interface device.
   9. Digital alarm communicator transmitter.

1.04 DEFINITIONS

A. LED: Light-emitting diode.

B. NICET: National Institute for Certification in Engineering Technologies.

1.05 SYSTEM DESCRIPTION

A. Noncoded, UL-certified addressable system, with automatic sensitivity control of certain smoke detectors and multiplexed signal transmission, dedicated to fire-alarm service only.

1.06 PERFORMANCE REQUIREMENTS

A. Seismic Performance: Fire-alarm control unit and raceways shall withstand the effects of earthquake motions determined according to SEI/ASCE 7.
   1. The term "withstand" means "the unit will remain in place without separation of any parts from the device when subjected to the seismic forces specified and the unit will be fully operational after the seismic event."

1.07 SUBMITTALS

A. General Submittal Requirements:
   1. In addition to the submittal to the Architect/Engineer, provide a complete submittal to the office of the Utah State Fire Marshal for review and approval. Incorporate Fire Marshal's corrections prior to submitting to the Architect/Engineer.
   2. Submittals shall be approved by authorities having jurisdiction prior to submitting them to Architect.
   3. Shop Drawings shall be prepared by persons with the following qualifications:
      a. Trained and certified by manufacturer in fire-alarm system design.
      b. NICET-certified fire-alarm technician, Level IV minimum.
      c. Licensed or certified by authorities having jurisdiction.

B. Product Data: For each type of product indicated.

C. Shop Drawings: For fire-alarm system. Include plans, elevations, sections, details, and attachments to other work.

1. Comply with recommendations in the "Documentation" Section of the "Fundamentals of Fire Alarm Systems" Chapter in NFPA 72.
2. Include voltage drop calculations for notification appliance circuits.
3. Include battery-size calculations.
4. Include performance parameters and installation details for each detector, verifying that each detector is listed for complete range of air velocity, temperature, and humidity possible when air-handling system is operating.
5. Include plans, sections, and elevations of heating, ventilating, and air-conditioning ducts, drawn to scale and coordinating installation of duct smoke detectors and access to them. Show critical dimensions that relate to placement and support of sampling tubes, detector housing, and remote status and alarm indicators. Locate detectors according to manufacturer's written recommendations.
6. Include voice/alarm signaling-service equipment rack or console layout, grounding schematic, amplifier power calculation, and single-line connection diagram.
7. Include floor plans to indicate final outlet locations showing address of each addressable device. Show size and route of cable and conduits.

D. Qualification Data: For qualified Installer.

E. Seismic Qualification Certificates: For fire-alarm control unit, accessories, and components, from manufacturer.
1. Basis for Certification: Indicate whether withstand certification is based on actual test of assembled components or on calculation.
2. Dimensioned Outline Drawings of Equipment Unit: Identify center of gravity and locate and describe mounting and anchorage provisions.
3. Detailed description of equipment anchorage devices on which the certification is based and their installation requirements.

F. Field quality-control reports.

G. Operation and Maintenance Data: For fire-alarm systems and components to include in emergency, operation, and maintenance manuals. In addition to items specified in Division 01 Section "Operation and Maintenance Data," include the following:
1. Comply with the "Records" Section of the "Inspection, Testing and Maintenance" Chapter in NFPA 72.
2. Provide "Record of Completion Documents" according to NFPA 72 article "Permanent Records" in the "Records" Section of the "Inspection, Testing and Maintenance" Chapter.
3. Record copy of site-specific software.
4. Provide "Maintenance, Inspection and Testing Records" according to NFPA 72 article of the same name and include the following:
    a. Frequency of testing of installed components.
    b. Frequency of inspection of installed components.
    c. Requirements and recommendations related to results of maintenance.
    d. Manufacturer's user training manuals.
5. Manufacturer's required maintenance related to system warranty requirements.
6. Abbreviated operating instructions for mounting at fire-alarm control unit.
7. Copy of NFPA 25.

H. Software and Firmware Operational Documentation:
1. Software operating and upgrade manuals.
2. Program Software Backup: On magnetic media or compact disk, complete with data files.
3. Device address list.
4. Printout of software application and graphic screens.

1.08 QUALITY ASSURANCE

A. Installer Qualifications: Personnel shall be trained and certified by manufacturer for installation of units required for this Project.
1. Installation shall be by personnel certified by NICET as fire-alarm Level III technician.

B. Source Limitations for Fire-Alarm System and Components: Obtain fire-alarm system from single source from single manufacturer. Components shall be compatible with, and operate as, an extension of existing system.

C. Electrical Components, Devices, and Accessories: Listed and labeled as defined in NFPA 70, by a qualified testing agency, and marked for intended location and application.

D. NFPA Certification: Obtain certification according to NFPA 72 by a UL-listed alarm company.

E. GUARANTEES:
1. Furnish a three-year guarantee for all equipment, materials and installation, including all labor and transportation
2. Emergency Response: The fire alarm equipment supplier shall provide an emergency response within four hours of any reported system failure to resolve the problem on a continuous basis.

1.09 SOFTWARE SERVICE AGREEMENT

A. Comply with UL 864.

B. Technical Support: Beginning with Substantial Completion, provide software support for two years.

C. Upgrade Service: Update software to latest version at Project completion. Install and program software upgrades that become available within two years from date of Substantial Completion. Upgrading software shall include operating system. Upgrade shall include new or revised licenses for use of software.
1. Provide 30 days' notice to Owner to allow scheduling and access to system and to allow Owner to upgrade computer equipment if necessary.

1.10 EXTRA MATERIALS

A. Furnish extra materials that match products installed and that are packaged with protective covering for storage and identified with labels describing contents.
1. Smoke Detectors, Fire Detectors: Quantity equal to 10 percent of amount of each type installed, but no fewer than 1 unit of each type.
2. Keys and Tools: One extra set for access to locked and tamperproofed components.
3. Audible and Visual Notification Appliances: Quantity equal to 5 percent of amount of each type installed, but no fewer than 1 unit of each type.
4. Fuses: Two of each type installed in the system.

PART 2 PRODUCTS

2.01 MANUFACTURERS

A. Manufacturers: Honeywell – Silent Knight or prior approved equals

2.02 SYSTEMS OPERATIONAL DESCRIPTION

A. Fire-alarm signal initiation shall be by one or more of the following devices and systems:
1. Manual stations.
2. Heat detectors.
3. Flame detectors.
4. Smoke detectors.
5. Duct smoke detectors.
6. Verified automatic alarm operation of smoke detectors.
7. Automatic sprinkler system water flow.
8. Heat detectors in elevator shaft and pit.
9. Fire-extinguishing system operation.
10. Fire standpipe system.

B. Fire-alarm signal shall initiate the following actions:
1. Continuously operate alarm notification appliances.
2. Identify alarm at fire-alarm control unit and remote annunciators.

3. Transmit an alarm signal to the remote alarm receiving station.
4. Unlock electric door locks in designated egress paths.
5. Release fire and smoke doors held open by magnetic door holders.
6. Activate voice/alarm communication system.
7. Recall elevators to primary or alternate recall floors.
8. Activate emergency lighting control.
9. Activate emergency shutoffs for gas and fuel supplies.
10. Record events in the system memory.
11. Mute and/or override the sports PA system

C. Supervisory signal initiation shall be by one or more of the following devices and actions:
1. Valve supervisory switch.
2. Low-air-pressure switch of a dry-pipe sprinkler system.
3. Elevator shunt-trip supervision.

D. System trouble signal initiation shall be by one or more of the following devices and actions:
1. Open circuits, shorts, and grounds in designated circuits.
2. Opening, tampering with, or removing alarm-initiating and supervisory signal-initiating devices.
3. Loss of primary power at fire-alarm control unit.
4. Ground or a single break in fire-alarm control unit internal circuits.
5. Abnormal ac voltage at fire-alarm control unit.
6. Break in standby battery circuitry.
7. Failure of battery charging.
8. Abnormal position of any switch at fire-alarm control unit or annunciator.

E. System Trouble and Supervisory Signal Actions: Initiate notification appliance and annunciate at fire-alarm control unit and remote annunciators.

2.03 FIRE-ALARM CONTROL UNIT

A. General Requirements for Fire-Alarm Control Unit:
1. Field-programmable, microprocessor-based, modular, power-limited design with electronic modules, complying with UL 864 and listed and labeled by an NRTL.
a. System software and programs shall be held in flash electrically erasable programmable read-only memory (EEPROM), retaining the information through failure of primary and secondary power supplies.
b. Include a real-time clock for time annotation of events on the event recorder and printer.
2. Addressable initiation devices that communicate device identity and status.
a. Smoke sensors shall additionally communicate sensitivity setting and allow for adjustment of sensitivity at fire-alarm control unit.
b. Temperature sensors shall additionally test for and communicate the sensitivity range of the device.
3. Addressable control circuits for operation of mechanical equipment.
4. Shall operate all alarm and auxiliary devices and close all fire and smoke doors.
5. Shall detect the operation of any signal initiating device, display description of the device, and area of the alarm. Also shall print out alarm type, location, time, and date.

B. Alphanumeric Display and System Controls: Arranged for interface between human operator at fire-alarm control unit and addressable system components including annunciation and supervision. Display alarm, supervisory, and component status messages and the programming and control menu.
1. Annunciator and Display: Liquid-crystal type, 3 line(s) of 80 characters, minimum.
2. Keypad: Arranged to permit entry and execution of programming, display, and control commands and to indicate control commands to be entered into the system for control of smoke-detector sensitivity and other parameters.

C. Circuits:
   1. Initiating Device, Notification Appliance, and Signaling Line Circuits: NFPA 72, Class A.
      a. Quantity of addressable devices shall not exceed 75% of signaling line circuit capacity.
   2. Serial Interfaces: RS-232 ports for printers.

D. Smoke-Alarm Verification:
   1. Initiate audible and visible indication of an "alarm-verification" signal at fire-alarm control unit.
   2. Activate an NRTL-listed and -approved "alarm-verification" sequence at fire-alarm control unit and detector.
   3. Sound general alarm if the alarm is verified.
   4. Cancel fire-alarm control unit indication and system reset if the alarm is not verified.

E. Notification Appliance Circuit: Operation shall sound in a temporal pattern.

F. Elevator Recall:
   1. Smoke detectors at the following locations shall initiate automatic elevator recall. Alarm-initiating devices, except those listed, shall not start elevator recall.
      a. Elevator lobby detectors except the lobby detector on the designated floor.
      b. Smoke detector in elevator machine room.
      c. Smoke detectors in elevator hoistway.
   2. Elevator lobby detectors located on the designated recall floors shall be programmed to move the cars to the alternate recall floor.
   3. Heat detector in elevator machine room shall shunt trip the power to the elevator, after the elevator has moved to the recall floor.
   4. Water-flow alarm connected to sprinkler in an elevator shaft and elevator machine room shall shut down elevators associated with the location without time delay.
      a. Water-flow switch associated with the sprinkler in the elevator pit may have a delay to allow elevators to move to the designated floor.

G. Door Controls: Door hold-open devices that are controlled by smoke detectors at doors in smoke barrier walls shall be connected to fire-alarm system.

H. Remote Smoke-Detector Sensitivity Adjustment: Controls shall select specific addressable smoke detectors for adjustment, display their current status and sensitivity settings, and change those settings. Allow controls to be used to program repetitive, time-scheduled, and automated changes in sensitivity of specific detector groups. Record sensitivity adjustments and sensitivity-adjustment schedule changes in system memory, and print out the final adjusted values on system printer.

I. Transmission to Remote Alarm Receiving Station: Automatically transmit alarm, supervisory, and trouble signals to a remote alarm station.

J. Voice/Alarm Signaling Service: Central emergency communication system with redundant microphones, preamplifiers, amplifiers, and tone generators provided as a special module that is part of fire-alarm control unit.
   1. Indicated number of alarm channels for automatic, simultaneous transmission of different announcements to different zones or for manual transmission of announcements by use of the central-control microphone. Amplifiers shall comply with UL 1711 and be listed by an NRTL.
      a. Allow the application of and evacuation signal to indicated number of zones and, at same time, allow voice paging to the other zones selectively or in any combination.
      b. Programmable tone and message sequence selection.
      c. Standard digitally recorded messages for "Evacuation" and "All Clear."
      d. Generate tones to be sequenced with audio messages of type recommended by NFPA 72 and that are compatible with tone patterns of notification appliance circuits of fire-alarm control unit.

2. Status Annunciator: Indicate the status of various voice/alarm speaker zones and the status of firefighters' two-way telephone communication zones.
3. Preamplifiers, amplifiers, and tone generators shall automatically transfer to backup units, on primary equipment failure.

K. Printout of Events: On receipt of signal, print alarm, supervisory, and trouble events. Identify zone, device, and function. Include type of signal (alarm, supervisory, or trouble) and date and time of occurrence. Differentiate alarm signals from all other printed indications. Also print system reset event, including same information for device, location, date, and time. Commands initiate the printing of a list of existing alarm, supervisory, and trouble conditions in the system and a historical log of events.

L. Primary Power: 24-V dc obtained from 120-V ac service and a power-supply module. Initiating devices, notification appliances, signaling lines, trouble signals, supervisory and digital alarm communicator transmitters shall be powered by 24-V dc source.
1. Alarm current draw of entire fire-alarm system shall not exceed 80 percent of the power-supply module rating.

M. Secondary Power: 24-V dc supply system with batteries, automatic battery charger, and automatic transfer switch.
1. Batteries: Sealed, valve-regulated, recombinant lead acid.
2. Shall be a gel cell type. Must meet requirements plus an addition 25 percent ampere-hour capacity.

N. Instructions: Computer printout or typewritten instruction card mounted behind a plastic or glass cover in a stainless-steel or aluminum frame. Include interpretation and describe appropriate response for displays and signals. Briefly describe the functional operation of the system under normal, alarm, and trouble conditions.

2.04 MANUAL FIRE-ALARM BOXES

A. General Requirements for Manual Fire-Alarm Boxes: Comply with UL 38. Boxes shall be finished in white with molded red raised-letter operating instructions in contrasting color; shall show visible indication of operation; and shall be mounted on recessed outlet box. If indicated as surface mounted, provide manufacturer's surface back box.
1. Double-action mechanism requiring two actions to initiate an alarm, pull-lever type; with integral addressable module arranged to communicate manual-station status (normal, alarm, or trouble) to fire-alarm control unit.
2. Station Reset: Key- or wrench-operated switch.

2.05 SYSTEM SMOKE DETECTORS

A. General Requirements for System Smoke Detectors:
1. Comply with UL 268; operating at 24-V dc, nominal.
2. Detectors shall be four-wire type.
3. Integral Addressable Module: Arranged to communicate detector status (normal, alarm, or trouble) to fire-alarm control unit.
4. Base Mounting: Detector and associated electronic components shall be mounted in a twist-lock module that connects to a fixed base. Provide terminals in the fixed base for connection to building wiring.
5. Self-Restoring: Detectors do not require resetting or readjustment after actuation to restore them to normal operation.
6. Integral Visual-Indicating Light: LED type indicating detector has operated and power-on status.
7. Remote Control: Unless otherwise indicated, detectors shall be analog-addressable type, individually monitored at fire-alarm control unit for calibration, sensitivity, and alarm condition and individually adjustable for sensitivity by fire-alarm control unit.
a. Rate-of-rise temperature characteristic shall be selectable at fire-alarm control unit for 15 or 20 deg F (8 or 11 deg C) per minute.

b. Fixed-temperature sensing shall be independent of rate-of-rise sensing and shall be settable at fire-alarm control unit to operate at 135 or 155 deg F (57 or 68 deg C).
c. Provide multiple levels of detection sensitivity for each sensor.

B. Photoelectric Smoke Detectors:
1. Detector address shall be accessible from fire-alarm control unit and shall be able to identify the detector's location within the system and its sensitivity setting.
2. An operator at fire-alarm control unit, having the designated access level, shall be able to manually access the following for each detector:
a. Primary status.
b. Device type.
c. Present average value.
d. Present sensitivity selected.
e. Sensor range (normal, dirty, etc.).

C. Ionization Smoke Detector:
1. Detector address shall be accessible from fire-alarm control unit and shall be able to identify the detector's location within the system and its sensitivity setting.
2. An operator at fire-alarm control unit, having the designated access level, shall be able to manually access the following for each detector:
a. Primary status.
b. Device type.
c. Present average value.
d. Present sensitivity selected.
e. Sensor range (normal, dirty, etc.).

D. Duct Smoke Detectors: Photoelectric type complying with UL 268A.
1. Detector address shall be accessible from fire-alarm control unit and shall be able to identify the detector's location within the system and its sensitivity setting.
2. An operator at fire-alarm control unit, having the designated access level, shall be able to manually access the following for each detector:
a. Primary status.
b. Device type.
c. Present average value.
d. Present sensitivity selected.
e. Sensor range (normal, dirty, etc.).
3. Weatherproof Duct Housing Enclosure: NEMA 250, Type 4X; NRTL listed for use with the supplied detector.
4. Each sensor shall have multiple levels of detection sensitivity.
5. Sampling Tubes: Design and dimensions as recommended by manufacturer for specific duct size, air velocity, and installation conditions where applied.
6. Relay Fan Shutdown: Rated to interrupt fan motor-control circuit.

2.06 HEAT DETECTORS

A. General Requirements for Heat Detectors: Comply with UL 521.

B. Heat Detector, Combination Type: Actuated by either a fixed temperature of 135 deg F (57 deg C) or a rate of rise that exceeds 15 deg F (8 deg C) per minute unless otherwise indicated.
1. Mounting: Twist-lock base interchangeable with smoke-detector bases.
2. Integral Addressable Module: Arranged to communicate detector status (normal, alarm, or trouble) to fire-alarm control unit.

2.07 NOTIFICATION APPLIANCES

A. General Requirements for Notification Appliances: Individually addressed, connected to a signaling line circuit, equipped for mounting as indicated and with screw terminals for system connections.

B. General Requirements for Notification Appliances: Connected to notification appliance signal circuits zoned as indicated, equipped for mounting as indicated and with screw terminals for system connections.
   1. Combination Devices: Factory-integrated audible and visible devices in a single-mounting assembly, equipped for mounting as indicated and with screw terminals for system connections.

C. Horns: Electric-vibrating-polarized type, 24-V dc; with provision for housing the operating mechanism behind a grille. Comply with UL 464. Horns shall produce a sound-pressure level of 90 dBA, measured 10 feet (304.8 cm) from the horn, using the coded signal prescribed in UL 464 test protocol.

D. Visible Notification Appliances: Xenon strobe lights comply with UL 1971, with clear or nominal white polycarbonate lens mounted on an aluminum faceplate. The word "FIRE" is engraved in minimum 1-inch- (25-mm-) high letters on the lens.
   1. Rated Light Output:
      a. 15/30/75/110 cd, selectable in the field.
   2. Mounting: Wall mounted unless otherwise indicated.
   3. For units with guards to prevent physical damage, light output ratings shall be determined with guards in place.
   4. Flashing shall be in a temporal pattern, synchronized with other units.
   5. Strobe Leads: Factory connected to screw terminals.
   6. Mounting Faceplate: Factory finished, white as selected by the Architect.

E. Voice/Tone Notification Appliances:
   1. Appliances shall comply with UL 1480 and shall be listed and labeled by an NRTL.
   2. High-Range Units: Rated 2 to 15 W.
   3. Low-Range Units: Rated 1 to 2 W.
   4. Mounting: Semirecessed.
   5. Matching Transformers: Tap range matched to acoustical environment of speaker location.

2.08 MAGNETIC DOOR HOLDERS

A. Description: Units are equipped for wall or floor mounting as indicated and are complete with matching doorplate.
   1. Manufacturer: GE Interlogix ESL DH Series
   2. Electromagnet: Requires no more than 3 W to develop 35-lbf holding force.
   3. Wall-Mounted or Floor-Mounted Units as directed by architect: Flush mounted where possible.
   4. Rating: Double Coil, Dual rated 24-Vdc/Vac and 120 Vac.

B. Material and Finish: Match door hardware.

2.09 FDC NOTIFICATION APPLIACE

A. Provide FDC notification appliance located outside above the FDC location.

B. Notification appliance shall be:
   1. Manufacturer: Potter SASH-24
   2. Weatherproof, horn/strobe, 24VDC

2.10 REMOTE ANNUNCIATOR

A. Description: Annunciator functions shall match those of fire-alarm control unit for alarm, supervisory, and trouble indications. Manual switching functions shall match those of fire-alarm control unit, including acknowledging, silencing, resetting, and testing.
   1. Mounting: Flush cabinet, NEMA 250, Type 1.

B. Display Type and Functional Performance: Alphanumeric display and LED indicating lights shall match those of fire-alarm control unit. Provide controls to acknowledge, silence, reset, and test functions for alarm, supervisory, and trouble signals.

2.11 ADDRESSABLE INTERFACE DEVICE

A. Description: Microelectronic monitor module, NRTL listed for use in providing a system address for alarm-initiating devices for wired applications with normally open contacts.

B. Integral Relay: Capable of providing a direct signal to external system or equipment.

2.12 REMOTE MONITORING

A. Provide a 1” conduit from fire alarm control panel to adjacent fiber patch panel for connection to campus fiber loop and remote monitoring of the fire alarm system through the campus monitoring system. Include necessary patch cables from fire alarm control panel to patch panel.

2.13 DEVICE FINISH

A. Factory fabricated and finished in: white with red lettering.

2.14 DEVICE GUARDS

A. Description: Welded wire mesh of size and shape for the manual station, smoke detector, gong, or other devices located in the gymnasium.
   1. Factory fabricated and furnished by manufacturer of device.
   2. Finish: Paint of color to match the protected device.

PART 3 EXECUTION

3.01 EQUIPMENT INSTALLATION

A. Comply with NFPA 72 for installation of fire-alarm equipment.

B. Equipment Mounting: Install wall-mounted fire-alarm control units with tops of cabinets not more than 72 inches (1828.8 mm) above the finished floor.
   1. Place and secure anchorage devices. Use setting drawings, templates, diagrams, instructions, and directions furnished with items to be embedded.
   2. Install anchor bolts to elevations required for proper attachment to supported equipment.

C. Smoke- or Heat-Detector Spacing:
   1. Comply with NFPA 72, "Smoke-Sensing Fire Detectors" Section in the "Initiating Devices" Chapter, for smoke-detector spacing.
   2. Comply with NFPA 72, "Heat-Sensing Fire Detectors" Section in the "Initiating Devices" Chapter, for heat-detector spacing.
   3. Smooth ceiling spacing shall not exceed 30 feet (914.4 cm).
   4. Spacing of detectors for irregular areas, for irregular ceiling construction, and for high ceiling areas shall be determined according to Appendix A or Appendix B in NFPA 72.
   5. HVAC: Locate detectors not closer than 3 feet (91.44 cm) from air-supply diffuser or return-air opening.
   6. Lighting Fixtures: Locate detectors not closer than 12 inches (304.8 mm) from any part of a lighting fixture.

D. Duct Smoke Detectors: Comply with NFPA 72 and NFPA 90A. Install sampling tubes so they extend the full width of duct.

E. Heat Detectors in Elevator Shafts: Coordinate temperature rating and location with sprinkler rating and location. Locate detectors within 12" of sprinkler heads.

F. Remote Status and Alarm Indicators: Install near each smoke detector and each sprinkler water-flow switch and valve-tamper switch that is not readily visible from normal viewing position.

G. Audible Alarm-Indicating Devices: Install not less than 6 inches (152.4 mm) below the ceiling. Install bells and horns on flush-mounted back boxes with the device-operating mechanism concealed behind a grille.

H. Visible Alarm-Indicating Devices: Install adjacent to each alarm bell or alarm horn and at least 6 inches (152.4 mm) below the ceiling and at least 84" above the floor.

I. Pull Station height shall be not more than 48 inches (1219.2 mm) above the floor level to the bottom of the device.

J. Device Location-Indicating Lights: Locate in public space near the device they monitor.

K. Fire-Alarm Control Unit: Surface mounted, with tops of cabinets not more than 72 inches (1828.8 mm) above the finished floor.

L. Annunciator: Install with top of panel not more than 72 inches (1828.8 mm) above the finished floor.

3.02 WIRING INSTALLATION

A. Wiring Method: Install all cables and wiring in metal raceways according to Division 26 Section "Raceway and Boxes for Electrical Systems." Conceal raceway except in unfinished spaces and as indicated.

B. Wiring within Enclosures: Separate power-limited and non-power-limited conductors as recommended by the manufacturer. Install conductors parallel with or at right angles to sides and back of the enclosure. Bundle, lace, and train conductors to terminal points with no excess. Connect conductors that are terminated, spliced, or interrupted in any enclosure associated with the fire alarm system to terminal blocks. Mark each terminal according to the system's wiring diagrams. Make all connections with approved crimp-on terminal spade lugs, pressure-type terminal blocks, or plug connectors.

C. Cable Taps: Use numbered terminal strips in junction, pull and outlet boxes, cabinets, or equipment enclosures where circuit connections are made.

D. Color-Coding: Color-code fire alarm conductors differently from the normal building power wiring. Use one color-code for alarm circuit wiring and a different color-code for supervisory circuits. Color-code audible alarm-indicating circuits differently from alarm-initiating circuits. Use different colors for visible alarm-indicating devices. Paint fire alarm system junction boxes and covers red where concealed.
   1. Comply with campus color-code standard for fire alarm system wiring.

E. Risers: Install at least two vertical cable risers to serve the fire alarm system. Separate risers in close proximity to each other with a minimum one-hour-rated wall, so the loss of one riser does not prevent the receipt or transmission of signal from other floors or zones.

F. Wiring to Remote Alarm Transmitting Device: 1-inch (25-mm) conduit between the FACP and the transmitter. Install number of conductors and electrical supervision for connecting wiring as needed to suit monitoring function.

G. All necessary provisions shall be made for automatic reporting of all alarms from the project fire alarm system to the remote station receiving console through the campus fiber network. Fire alarm contractor is responsible for connecting fire alarm panel to adjacent patch panel including the necessary cable (fiber) connections. The contractor will inform the proper authorities when the phone line is ready to be connected.

H. Concerning NAC the Horn and strobe circuits shall be separate. The horns shall have a temporal pattern signal. IDC, NAC and SLC wiring shall have independent feeds and returns from the panel to form a loop.

I. FDC notification appliance shall be hard wired through the flow switch and powered by the fire alarm 24 VDC circuit. The appliance shall operate upon water flow and be silenced only upon cessation of water flow.

J. Magnetic door hold open devices shall be powered from and controlled by the fire alarm panel through the 24 VDC circuit. Power shall be maintained during normal operation to the mag-hold-open device and power shall be removed upon initiation of the fire alarm system releasing the doors. Magnetic door hold open devices shall be not be controlled through fire alarm control modules they shall be powered and controlled directly from the fire alarm panel.

3.03 CONNECTIONS

A. For fire-protection systems related to doors in fire-rated walls and partitions and to doors in smoke partitions, comply with requirements in Division 08 Section "Door Hardware." Connect hardware and devices to fire-alarm system.
   1. Verify that hardware and devices are NRTL listed for use with fire-alarm system in this Section before making connections.

B. Make addressable connections with a supervised interface device to the following devices and systems. Install the interface device less than 3 feet (91.44 cm) from the device controlled. Make an addressable confirmation connection when such feedback is available at the device or system being controlled.
   1. Alarm-initiating connection to smoke-control system (smoke management) at firefighter smoke-control system panel.
   2. Alarm-initiating connection to sports PA system for muting and/or override of PA system.
   3. Smoke dampers in air ducts of designated air-conditioning duct systems.
   4. Door hold open devices on designated doors.
   5. Alarm-initiating connection to elevator recall system and components.
   6. Alarm-initiating connection to activate emergency lighting control.
   7. Alarm-initiating connection to activate emergency shutoffs for gas and fuel supplies.
   8. Supervisory connections at valve supervisory switches.
   9. Supervisory connections at low-air-pressure switch of each dry-pipe sprinkler system.
   10. Supervisory connections at elevator shunt trip breaker.

3.04 IDENTIFICATION

A. Identify system components, wiring, cabling, and terminals. Comply with requirements for identification specified in Division 26 Section "Identification for Electrical Systems."

B. Install framed instructions in a location visible from fire-alarm control unit.

3.05 GROUNDING

A. Ground fire-alarm control unit and associated circuits; comply with IEEE 1100. Install a ground wire from main service ground to fire-alarm control unit.

3.06 FIELD QUALITY CONTROL

A. Field tests shall be witnessed by authorities having jurisdiction.

B. Perform tests and inspections.
   1. Manufacturer's Field Service: Engage a factory-authorized service representative to inspect components, assemblies, and equipment installations, including connections, and to assist in testing.

C. Tests and Inspections:
   1. Visual Inspection: Conduct visual inspection prior to testing.
      a. Inspection shall be based on completed Record Drawings and system documentation that is required by NFPA 72 inch (1828.8 mm) its "Completion Documents, Preparation" Table in the "Documentation" Section of the "Fundamentals of Fire Alarm Systems" Chapter.
      b. Comply with "Visual Inspection Frequencies" Table in the "Inspection" Section of the "Inspection, Testing and Maintenance" Chapter in NFPA 72; retain the "Initial/Reacceptance" column and list only the installed components.
   2. System Testing: Comply with "Test Methods" Table in the "Testing" Section of the "Inspection, Testing and Maintenance" Chapter in NFPA 72.
   3. Test audible appliances for the public operating mode according to manufacturer's written instructions. Perform the test using a portable sound-level meter complying with Type 2 requirements in ANSI S1.4.
   4. Test audible appliances for the private operating mode according to manufacturer's written instructions.

5. Test visible appliances for the public operating mode according to manufacturer's written instructions.
6. Factory-authorized service representative shall prepare the "Fire Alarm System Record of Completion" in the "Documentation" Section of the "Fundamentals of Fire Alarm Systems" Chapter in NFPA 72 and the "Inspection and Testing Form" in the "Records" Section of the "Inspection, Testing and Maintenance" Chapter in NFPA 72.

D. Reacceptance Testing: Perform reacceptance testing to verify the proper operation of added or replaced devices and appliances.

E. Fire-alarm system will be considered defective if it does not pass tests and inspections.

F. Prepare test and inspection reports.

G. All information pertaining to the Facility's fire alarm system shall be supplied to the facilities managers. This information shall include everything necessary to change the fire alarm program themselves. The minimum amount of information required is:
   a. CAD drawing files of building fire alarm map.
   b. CAD drawing files of "as built" fire alarm components and point to point connections.
   c. CAD drawing files of "as built" drawings showing installed wiring, color coding, specific interconnections between all equipment, and internal wiring of equipment.
   d. General configuration programming
   e. Job specific configuration programming.
   f. Tutorial file on complete programming of fire alarm system.

H. Maintenance Test and Inspection: Perform tests and inspections listed for weekly, monthly, quarterly, and semiannual periods. Use forms developed for initial tests and inspections.

I. Annual Test and Inspection: One year after date of Substantial Completion, test fire-alarm system complying with visual and testing inspection requirements in NFPA 72. Use forms developed for initial tests and inspections.

3.07 DEMONSTRATION

A. Engage a factory-authorized service representative to train Owner's maintenance personnel to adjust, operate, and maintain fire-alarm system.

END OF SECTION 283111

SECTION 323113
CHAIN LINK FENCES AND GATES

PART 1 GENERAL

1.01 SECTION INCLUDES

A. Posts, rails, and frames.

B. Wire fabric.

C. Manual gates with related hardware.

D. Accessories.

1.02 RELATED REQUIREMENTS

A. Section 033000 - Cast-in-Place Concrete: Concrete anchorage for posts.

1.03 REFERENCE STANDARDS

A. ASTM A123/A123M - Standard Specification for Zinc (Hot-Dip Galvanized) Coatings on Iron and Steel Products; 2017.

B. ASTM A153/A153M - Standard Specification for Zinc Coating (Hot-Dip) on Iron and Steel Hardware; 2023.

C. ASTM A392 - Standard Specification for Zinc-Coated Steel Chain-Link Fence Fabric; 2011a (Reapproved 2022).

D. ASTM A653/A653M - Standard Specification for Steel Sheet, Zinc-Coated (Galvanized) or Zinc-Iron Alloy-Coated (Galvannealed) by the Hot-Dip Process; 2023.

E. ASTM F567 - Standard Practice for Installation of Chain-Link Fence; 2023.

F. CLFMI CLF-FIG0111 - Field Inspection Guide; 2014.

G. CLFMI CLF-SFR0111 - Security Fencing Recommendations; 2014.

H. FS RR-F-191/1D - Fencing, Wire and Post Metal (Chain-Link Fence Fabric); 1990.

1.04 SUBMITTALS

A. See Section 013000 - Administrative Requirements, for submittal procedures.

B. Product Data: Provide data on fabric, posts, accessories, fittings and hardware.

C. Shop Drawings: Indicate plan layout, spacing of components, post foundation dimensions, hardware anchorage, and schedule of components. See CLFMI CLF-SFR0111 for planning and design recommendations.

1.05 QUALITY ASSURANCE

A. Manufacturer Qualifications: Company specializing in manufacturing products specified in this section, with not less than three years of documented experience.

PART 2 PRODUCTS

2.01 MANUFACTURERS

A. Chain Link Fences and Gates:

2.02 COMPONENTS

A. Line Posts: 1.9 inch (48 mm) diameter.

B. Corner and Terminal Posts: 2.38 inch (60 mm) diameter.

C. Gate Posts: 3-1/2 inch (89 mm) diameter.

D. Top and Brace Rail: 1.66 inch (42 mm) diameter, plain end, sleeve coupled.

E. Bottom Rail: 1.66 inch (42 mm) diameter, plain end, sleeve coupled.

F. Gate Frame: 1.66 inch (42 mm) diameter for welded fabrication.

G. Fabric: 2 inch (51 mm) diamond mesh interwoven wire, 6 gauge, 0.1920 inch (4.9 mm) thick, top selvage knuckle end closed, bottom selvage twisted tight.

H. Tension Wire: 6 gauge, 0.1920 inch (4.9 mm) thick steel, single strand.

I. Tension Band: Maunfacturer's standard hot dipped galvanized thick steel.

J. Tie Wire: Aluminum alloy steel wire.

2.03 MATERIALS

A. Posts, Rails, and Frames: _____:
   1. Formed from hot-dipped galvanized steel sheet, ASTM A653/A653M, HSLAS, Grade 50, with G90 (Z275) zinc coating.
   2. Line Posts: Type I round in accordance with FS RR-F-191/1D.
   3. Terminal, Corner, Rail, Brace, and Gate Posts: Type I round in accordance with FS RR-F-191/1D.

B. Wire Fabric: _____:
   1. ASTM A392 zinc coated steel chain link fabric.

2.04 MANUAL GATES AND RELATED HARDWARE

A. Hardware for Single Swinging Gates: 180 degree hinges, 2 for gates up to 60 inches (1,525 mm) high, 3 for taller gates; fork latch with gravity drop and padlock hasp; keeper to hold gate in fully open position.

B. Hinges: Finished to match fence components.
   1. Brackets: Round.
   2. Mounting: Center.
   3. Closing: Manual.

C. Latches: Finished to match fence components.
   1. Brackets: Round.

D. Cantilever Gates:
   1. Length: As indicated on drawings
   2. Height: 72 inches (1828.8 mm).
   3. Weight Rating: 2,000 lb (907 kg).
   4. Shaft: 1-inch (25.4 mm) diameter.
   5. Roller: Polymer casting, secured to shaft with nylon locknut.
   6. Mounting to Round Fence Post: U-bolts.
   7. Finish: Galvanized.

2.05 LIGHT-DUTY ARCHITECTURAL HARDWARE

A. Mechanical Latches: Steel latch, with mounting bracket for a nominal 1-5/8 inches (41 mm) diameter pipe post frame.
   1. Finish: Galvanized.

B. Roller Assembly: Steel chassis assembly with permanently-lubricated and sealed roller bearings.
   1. Weight Rating: Rate each gate according to the sizes indicated on drawings.
   2. Shaft: 1 inch (25.4 mm) diameter hardened steel shaft.
   3. Roller: Polymer casting, secured to shaft with nylon locknut.
   4. Mounting to Round Fence Post: U-bolts.
   5. Finish: Galvanized.

2.06 ACCESSORIES

A. Caps: Cast steel galvanized; sized to post diameter, set screw retainer.

B. Fittings: Sleeves, bands, clips, rail ends, tension bars, fasteners and fittings; steel.galvanized

2.07 FINISHES

A. Components (Other than Fabric): Galvanized in accordance with ASTM A123/A123M, at 1.7 ounces per square foot (530 g/sq m).

B. Hardware: Hot-dip galvanized to weight required by ASTM A153/A153M.

C. Accessories: Same finish as framing.

PART 3 EXECUTION

3.01 EXAMINATION

A. Verification of Conditions: Verify that areas are clear of obstructions or debris.

3.02 PREPARATION

A. Removal: Obstructions or debris.

B. Ground Preparation:
   1. Grading consistantly level to allow free rolling travel.

3.03 INSTALLATION

A. Install framework, fabric, accessories and gates in accordance with ASTM F567.

B. Set intermediate posts plumb , in concrete footings with top of footing 2 inches above finish grade. Slope top of concrete for water runoff.

C. Brace each gate and corner post to adjacent line post with horizontal center brace rail and diagonal truss rods. Install brace rail one bay from end and gate posts.

D. Install center brace rail on corner gate leaves.

E. Do not stretch fabric until concrete foundation has cured 28 days.

F. Stretch fabric between terminal posts or at intervals of 100 feet (30 m) maximum, whichever is less.

G. Position bottom of fabric 2 inches (50 mm) above finished grade.

H. Attach fabric to end, corner, and gate posts with tension bars and tension bar clips.

I. Do not attach the hinged side of gate to building wall; provide gate posts.

J. Install hardware and gate with fabric to match fence.

K. Perform three random field inspections confirming proper installation.

3.04 TOLERANCES

A. Maximum Variation From Plumb: 1/4 inch (6 mm).

B. Maximum Offset From True Position: 1 inch (25 mm).

3.05 FIELD QUALITY CONTROL

A. See Section 014000 - Quality Requirements, for additional requirements.

B. Layout: Verify that fence installation markings are accurate to design, paying attention to gate locations, underground utilities, and property lines.

C. Post Settings: Randomly inspect three locations against design for:
   1. Hole diameter.
   2. Hole depth.
   3. Hole spacing.

D. Fence Height: Randomly measure fence height at three locations or at areas that appear out of compliance with design.

E. Gates: Inspect for level, plumb, and alignment.

F. Workmanship: Verify neat installation free of defects. See CLFMI CLF-FIG0111 for field inspection guidance.

3.06 CLEANING

A. Clean jobsite of excess materials; scatter excess material from post hole excavations uniformly away from posts. Remove excess material if required.

B. Clean fence with mild household detergent and clean water rinse well.

C. Touch up scratched surfaces using materials recommended by manufacturer. Match touched-up paint color to factory-applied finish.

3.07 CLOSEOUT ACTIVITIES

A. See Section 017800 - Closeout Submittals, for closeout submittals.

B. Training: Train Owner's personnel on operation and maintenance of system.
   1. Use operation and maintenance manual as training reference, supplemented with additional training materials as required.
   2. Provide minimum of time frame required of training.
   3. Location: At project site.

END OF SECTION 323113

SECTION 323300
SITE FURNISHINGS

PART 1 GENERAL

1.01 SECTION INCLUDES

A. Benches
B. Bollards
C. Tables
D. Seating
E. Waste receptacles
F. Recycling receptacles
G. Bicycle racks

END OF SECTION 323300

This page intentionally left blank

SECTION 328400
IRRIGATION SYSTEM

PART 1 GENERAL

1.01 REFERENCE STANDARDS

A. ASME B16.18 - Cast Copper Alloy Solder Joint Pressure Fittings; 2021.

1.02 SUMMARY

A. This Section includes piping, valves, sprinklers, accessories, controls, and wiring for automatic control irrigation system

1.03 DEFINITIONS

A. Irrigiation Lateral Lines: Downstream from control valves to sprinklers, specialties, and drain valves. Piping is under pressure during flow.

B. Drain Piping: Downstream from circuit-piping drain valves. Piping is not under pressure.

C. Irrigation Main Piping: Downstream from point of connection to water distribution piping to, and including control valves. Piping is under water-distribution-system pressure.

1.04 RELATED WORK

1. Carefully examine all of the Contract Documents for requirements which affect the work of this Section. Other specification sections which directly relate to the work of this section include, but are not limited to the following:
2. Section 01 45 00, QUALITY CONTROL; Inspection and testing.
3. Section 31 23 00, SITE EXCAVATING, BACKFILLING AND COMPACTING; Excavation and backfill and establishment of subgrade elevations.
4. Section 32 93 00, TREES, PLANTS AND GROUND COVERS.
5. Section 33 10 00, WATER SYSTEM.

1.05 REFERENCES

A. Comply with applicable requirements of the following standards. Where these standards conflict with other specified requirements, the most restrictive requirements shall govern.
   1. American National Standards Institute (ANSI):
      a. Cast Copper Alloy Fittings for Flared Copper Tubes
   2. American Society of Irrigation Consultants (ASIC):
      a. Minimum Standards for Landscape Irrigation
   3. American Society for Testing and Materials (ASTM):
      a. Gray Iron Castings
      b. Seamless Copper Water Tube
      c. Poly (Vinyl Chloride)(PVC) Plastic Pipe, Schedules 40, 80, and 120
      d. Polyethylene (PE) Plastic Pipe (SLPR - PR) Based On Controlled Diameter.
      e. Poly(Vinyl Chloride) (PVC) Plastic Pipe (SDR-PR)
      f. Threaded Poly (Vinyl Chloride) (PVC) Plastic Pipe Fittings, Schedule 80
      g. Poly (Vinyl Chloride)(PVC) Plastic Pipe Fittings, Schedule 40
      h. Underground Installation of Thermoplastic Pressure Piping Irrigation Systems

1.06 SUBMITTALS

A. Shop Drawings: Show irrigation system piping, including plan layout, and locations, types, sizes, capacities, and flow characteristics of irrigation system piping components. Include water meters, backflow preventers, valves, piping, sprinklers and devices, accessories, controls, and wiring. Show areas of sprinkler spray and overspray. Show wire size and number of conductors for each control cable.
   1. Where appropriate, and when approved by the Architect, manufacturer's product data for equipment may be substituted for shop drawings.

B. Product Data: Include pressure ratings, rated capacities, and settings of selected models for the following:

1. General-Duty valves
2. Specialty valves
3. Control-valve boxes
4. Sprinklers
5. Irrigation specialties
6. Controllers

C. Submit a complete materials list indicating name of manufacturer, with model numbers of proposed irrigation system equipment and accessories.

D. Record and As-built Drawings: After completion of installation, furnish complete as-built drawings showing locations of all sprinkler heads, valves, drains, and piping to scale, with dimensions.

1.07 WARRANTY

A. The Contractor will be held strictly responsible for all parts of his work. If failure in the irrigation system or appurtenances develop within one (1) year from the date of final approval and acceptance of the work, the Contractor will be required to replace all faulty materials at his full expense. To this end, the Contractor is advised to purchase materials under a warranty from the manufacturer, guaranteeing proper warranty from the manufacturer, and guaranteeing proper service under the conditions which are established by the Drawings, specifications and local conditions.

B. Labor and materials to fulfill the requirements of this warranty shall be furnished by the Contractor at no additional cost to the Owner. All labor shall include time to correct any faulty material or workmanship.

1.08 QUALITY ASSURANCE

A. Work under this Section shall be performed under direct supervision of a Utah licensed irrigator with minimum 3 years experience in this type of work.

B. All applicable ANSI, AWWA, and ASTM Standards and Specifications, and all applicable building codes and other public agencies having jurisdiction upon the work.

C. Construct the system in accordance with all local codes, ordinances and laws. Any modification made to conform with codes, laws, and ordinances shall be completed at the Contractor's expense with no additional compensation allowed. However, when these specifcations and drawings call for or describe materials, workmanship, or constructino of a better quuality, higher standards, or larger size than is required by the above rules and regulations, these specifications and drawings take precedence.

D. Protection of Existing Plants and Site Conditions: take necessary precautions to protect site conditions to remain. Should damages be incurred, this Contractor shall repair the damage to its original condition at his own expense. Any disruption, destruction, or disturbance of any existing plant, tree, shrub, or turf, or any structure shall by completely restored to the satisfaction of the Owner, solely at the Contractor's expense.

E. Permits and Fees: Obtain all permits and pay required fees to any governmental agency having jurisdiction over the work. Inspection required by local ordinances during the course of construction shall be arranged as required. On completion of the work, satisfactory evidence shall be furnished to Architect to show that all work has been installed in accordance with the ordinances and code requirements.

F. The Contractor shall provide full coverage in all irrigated areas and shall be responsible for additional heads and components as required, installed at his own cost.

G. On-Site Observation

1. 1. At any time during the installation of the irrigation system by the Contractor, the Owner or Architect may visit the site to observe work underway. Upon request, the Contractor shall be required to uncover specified work as directed by the Owner or Architect without compensation. Should the material, workmanship or method of installation not meet the standards specified herein, the Contractor shall replace the work at his own expense.

2. If, in the opinion of the Architect, the labor furnished by the Contractor is incompetent, unskilled, or unreliable, his equipment inadequate, improper or unsafe, or if the Contractor shall fail to continuously and diligently prosecute the construction, the Architect or Owner shall, in writing, instruct the Contractor to remove all such causes of noncompliance and the Contractor shall promptly comply.

H. Electrical Components, Devices, and Accessories: Listed and labeled as defined in NFPA 70, Article 100, by a testing agency acceptable to authorities having jurisdiction, and marked for intended use.

I. Explanation of Drawings
1. Due to the scale of the Drawings, it is not possible to indicate all offsets, fittings, and sleeves which may be required. The Contractor shall carefully investigate the structural and finished conditions affecting all of the work and plan his work accordingly, furnishing such offsets, fittings, and sleeves as may be required to meet such conditions.
2. The Drawings are generally diagrammatic and indicative of the work to be installed. The work shall be installed in such a manner as to avoid conflicts between underground utilities, plantings, and other existing utilities and architectural features. Bring deviations to the Architect's attention.
3. All work called for on the Drawings by notes or details shall be furnished and installed whether or not specifically mentioned in the specifications.
4. The Contractor shall not willfully install the irrigation system as shown on the Drawings when it is obvious in the field that obstructions, grade differences, or discrepancies in area dimensions exist that might not have been known in engineering. Such obstructions or differences should be brought to the attention of the Architect. In the event that notification is not performed, the Contractor shall assume full responsibility for any revision necessary.
5. The Contractor shall, prior to trenching, verify the location of all underground utilities as are commonly encountered underground. Contractor shall take proper precaution not to damage or disturb said improvements.

1.09 SUBSTITUTIONS

A. Any substitution requests for equipment or materials listed on the irrigation drawings or specifications must be submitted for approval to the Owner’s Authorized Respresentative with the following:
1. Provide a statement indicating the reason for each the substitution, with a separate statement for each item substitution requested.
2. Provide product data for each substitution request.
3. Provide the estimated amount of cost savings if the substitution is approved.

B. Owner’s Authorized Representative has sole responsibility for accepting or rejecting any substitution requests as an approved equal to those equipment and materails listed on the irrigation drawings and specifiations.

1.10 CLOSEOUT SUBMITTALS

A. Contractor shall include in their Bid an allowance for four (4) hours of instruction of Owner and/or Owner's per sonnel upon completion of check/test/start-up/adjust operations by a competent operator (The Landscape Architect's office shall be notified at least one (1) week in advance of check/test/start-up/adjust operations).
1. In addition to all guarantees stated in these specifications, the Contractor shall provide one seasonal shutdown of the irrigation system and one seasonal start up. The Contractor shall provide all labor and incidental materials required to do this work. Contractor shall also instruct the Owner's designated personnel in the presence of the Architect in shutdown and start up procedures of irrigation system.

B. Spares and Special Tools – Provide Owner with 2 spare sprinkler heads of each size and type.

C. Maintenance and Operating Instructions: Upon completion of work and prior to application for acceptance and final payment, submit a minimum of three hard cover binders with the project

title to the Landscape Architect's office. After review and approval, the copies will be forwarded to the Owner. Included in the Maintenance and Operating binders shall be:

a. Table of Contents
b. Written description of Irrigation System.
c. System drawings:
d. One (1) copy of the original irrigation plan;
e. One (1) copy of the Record Drawing;
f. One (1) reproducible of the Record Drawing;
g. One (1) copy of the controller valve system wiring diagram
h. Listing of Manufacturers.
i. Manufacturers' data where multiple model, type and size listings are included; clearly and conspicuously indicating those that are pertinent to this installation.
j. "APPROVED" submittals of all irrigation equipment;
k. Operation:
l. Maintenance: including complete troubleshooting charts.
m. Parts list.
n. Names, addresses and telephone numbers of recommended repair and service companies. A copy of the suggested "System Operating Schedule" which shall call out the controller program required (zone run time in minutes per day and days per week) in order to provide the desired amount of water to each area under "no-rain" conditions.
o. Winterization and spring start-up procedures.
p. Guarantee data.

PART 2 PRODUCTS

2.01 MANUFACTURER

A. When a conflict exists between products on the drawings and products in the specifications, items listed on the drawings take precedence.

2.02 PIPES, TUBES, AND FITTINGS

A. Hard Copper Tubing: ASTM B 88, Type K, water tube, drawn temper.
   1. Copper Pressure Fittings: ASME B16.18, cast copper-alloy or ASME B16.22, wrought-copper, solder-joint fittings. Furnish wrought-copper fittings if indicated.
   2. Copper Unions: MSS SP-123, cast copper-alloy, hexagonal-stock body, with ball-and-socket, metal-to-metal seating surfaces and sodler-joit or threaded ends.

B. Polyvinyl chloride (PVC) Pipe
   1. Pressure Main Lines
      a. Pipe 4 inch (101.6 mm). diameter and less shall be Schedule 40 PVC plastic pipe 1120 or 1220, NSF approved, conforming to ASTM D 1785.
      b. Pipe larger than 4 inch (101.6 mm). diameter shall be PVC plastic pipe, SDR 21, 1120 or 1220, conforming to ASTM D 2241, with a minimum pressure rating of 200 psi (1378.95 kPa).
      c. Plastic pipe fittings shall be PVC molded fittings manufactured of the same material as the pipe and shall be suitable for solvent weld or slip joint ringtite seal (Schedule 40) conforming to ASTM D 2466, or threaded connections (Schedule 80) conforming to ASTM D 2464.
      d. Slipfitting socket taper shall be sized so that a dry unsoftened pipe end conforming to these specifications can be inserted no more than halfway into the socket. Plastic saddle and flange fittings shall not be used. Only Schedule 80 pipe may be threaded.
   2. Non-Pressure Lateral Lines
      a. Non-pressure burried lateral line piping shall be PVC Schedule 40 with solvent welded joints.
      b. Polyethylene pipe fittings shall be insert PVC or nylon type fitting recommended by pipe manufacturer. Fittings shall conform to NSF Standards, supplied by Harvard,

Liverpool, NY, or approved equal. Joints 1-1/4 inch (32 mm). and greater shall be double clamped with stainless steel clamps.

3. 3. Purple Pipe is required for all non-potable water uses.
4. Solvent Cement and primer for PVC solvent-weld pipe and fittings shall be of type and installation methods prescribed by the manufacturer.
5. All PVC pipe must bear the following markings:
   a. Manufacturer's name
   b. Nominal pipe size
   c. Schedule or class
   d. Pressure rating in PSI
   e. NSF (National Sanitation Foundation) approval
   f. Date of expiration
   g. Reclaimed water (if applicable)
6. 6. Fittings:
   a. All fittings shall bear the manufacturer's name or trademark, material designation, applicable IPS, schedule number, and NSF seal of approval. Schedule 40: ASTM 2466; Schedule 80: ASTM 2467.
   b. Fittings for threaded joints: ASTM D 2466, PVC, Schedule 80

C. Sleeves
1. For Control Wires: Schedule 40 PVC pipe or Schedule 40 galvanized steel pipe.
2. For Water Lines: Schedule 40 PVC or Schedule 40 galvanized steel pipe.
3. Sleeve size shall be at least two sizes larger than the diameter of the pipe line.

D. Adapters
1. All adapters shall be provided as required by the manufacturer and as required to construct the proposed system.

2.03 WARNING AND DETECTOR TAPE

A. Detector tape for identification of irrigation main locations shall be manufactured by Reef Industries, Inc., Houston, TX 77275-0218, or approved equal. Detector tape shall consist of a solid aluminum foil core running the full length and width of the tape and encased in a protective, high visibility, color coded inert plastic jacket. Detector tape shall conform to the following:
1. Plastic jacket shall be impervious to alkalis, acids, and other chemicals in the soil.
2. Foil core shall have a minimum thickness of 0.35 mils (0.00889 mm).
3. Overall thickness of the tape shall be 5.5 mils (0.1397 mm), minimum.
4. Tensile strength shall be 5,000 psi (34473.80 kPa), minimum.
5. Tape width shall be 3 inch (76.2 mm)., minimum.
6. Color of tape shall be "Safety Precaution Blue."
7. Tape shall be imprinted with the following legend: "Caution Buried Irrigation Line Below".

2.04 VALVES AND VALVE BOXES

A. Isolation Valves and Boxes:
1. Isolation valves 2 inch (50.8 mm). and smaller shall be cast iron body, bronze mounted with non-rising stem and working pressure rating of 200 psi (1378.95 kPa).
2. Isolation valves larger than 2 inch (50.8 mm). shall be mechanical joint or flanged cast iron with non-rising stem and working pressure rating of 200 psi (1378.95 kPa).
3. Isolation valves for above grade or pit use shall be supplied with wheel handles.
4. Isolation valve for underground use shall be supplied with 2 inch (50.8 mm). square operating nut. Stem extensions shall be added to bring operating nut to within two feet of finished grade.
5. Each Isolation valve shall have a valve box.
   a. a. Valve box and cover shall be Supremo Model Z-1425-3 Cleanout Box and Cover manufactured by Zurn Manufacturing, Erie, PA or approved equal.

B. Remote Control Valves and Boxes:
   1. Automatic Control Valves: Models per drawings or approved equivalent. Bronze body, normally closed diaphram type, operated by a 24-V solenoid. Valve size shall not be less than the size of the lateral served.
      a. All electric control valves shall be of the same manufacturer.
      b. All electric control valves shall have a manual flow adjsutment and pressure regulating module. Pressure regulating module for drip line systems shall be capable of regulating pressure from 15psi to 50psi using interchangeable, color coded regulator springs. The regulator shall have a built in indicator showing when proper outlet pressure is reached.
      c. Provide and install one control valve box for each electric control valve.
      d. Electric control valve shall be per drawings, or approved equal.
   2. Each remote control valve shall have a valve box and cover, with open bottom and openings for piping, and be desinged for installing flush with grade. Include size as required for valves and service.
      a. a. Valve box and cover shall be Supremo Model Z-1425-3 Cleanout Box and Cover manufactured by Zurn Manufacturing, Erie, PA or approved equal.
   3. Remote control valve tags/ties shall be yellow with thermofused numbers attached to valve with wire.

C. Drain and Flush Valves and Boxes:
   1. Drain and flush valves shall be all bronze construction manual angle valves installed at low points in system and designed to open for drainage if line pressure drops below 3 psig (20.68 kPa).
   2. Each drain and fllush valve shall have a valve box.
      a. Valve box and cover shall be Supremo Model Z-1425-3 Cleanout Box and Cover manufactured by Zurn Manufacturing, Erie, PA or approved equal.

D. Quick-Couplers:
   1. 1” Factory-fabricated, cast bronze or brass, two-piece assembly. Include coupler water-seal valve; removable upper body with spring-loaded or weighted, rubber-covered cap; hose swivel with ASME B1.20.7, 3/4-11.5NH threads for garden hose on outlet; and operating key.
      a. Locking-Top Option: Vandal-resistant, locking feature. Include two matching keys.
      b. For use on systems using non-potable water, locking rubber cover shall have molded-in warnings of "DO NOT DRINK" in English and Spanish.
   2. Quick Coupler and Control Wire Splice Boxes: heavy duty plastic 10” diameter by 10 ¼” deep, black.

E. Pressure Reducing Valves: Have the capacity to reduce in line pressures as required for proper operation of irrigation system. Valves shall be comparable to the Zurn Wilkins 500 Series regulators, or equal.
   1. Valve shall be capable of withstanding high supply pressure over 300 psi (2068.43 kPa).
   2. Pressure reducing valve shall have bronze bonnet with stainless steel seat and strainer.
   3. Flow control adjustments shall be capable of reduced pressure from 70 psi (482.63 kPa) to 20 psi (137.90 kPa).
   4. Valve shall be threaded (NPT) with swivel union female end on side.
   5. Drainage Backfill (for Manual Drain Sump and at Base of Valve Boxes): Cleaned gravel or crushed stone, graded from 3/8 inch (9.52 mm) minimum to 1” maximum, free from loam, clay, or deleterious materials.
   6. Purple pipe required for all non-potable water uses.

2.05 BACK FLOW PREVENTERS

A. Model and size per drawing schedule, or approved equivalent.

B. Reduced pressure backflow prevention units, or any unit as required by local codes, shall be provided as indicated on drawings and shall comply with local codes. If not indicated on

drawings, model and product data required for code compliance will be submitted to Landscape Architect prior to installation.

2.06 CONTROLLERS

A. Controller shall be per drawing or approved equal.

B. The final location of the controller will be verified on site with the owner rep and the landscape architect.

C. Grounding and wiring per manufacturer's instructions.

2.07 SPRINKLERS

A. Description: Models and spray patterns per drawings.
   1. Sprinkler manufacturer per drawing or approved equivalent. Brass or plastic housing and corrosion-resistant interior parts designed for uniform coverage over entire spray area indicated at available water pressure.
   2. Bubblers: Fixed pattern with screw type flow adjustment.
   3. Pop-up Spray Sprinklers: Fixed pattern, with screw-type flow adjustment and stainless-steel retraction spring.
   4. Pop-up Rotary Spray Sprinklers: Gear drive, full-circle and adjustable part-circle types.
   5. Pop-up Rotary Impact Sprinklers: Impact drive, full-circle and part-circle types.
   6. Aboveground Rotary Impact Sprinklers: Impact drive, full circle and part circle types

2.08 DRIP LINE SYSTEM COMPONENTS

A. Drip Line and Integral Components: Model, spacing, and size per drawing schedule, or approved equivalent.
   1. Drip Line: low density UV resistant polyethylene tubing, internal pressure compensating with an input pressure range of 22-58 psi (399.90 kPa).Spacing of lines and emitters per drawings.
   2. Drip Tubes: Polyethylene tubing, UV resistant. Model per drawings.
   3. Automatic In-Line Flushing Valves: Install at the end of each independent zone. Must be capable of flushing one gallon of water at the beginning of each irrigation cycle. Manufacturer to match drip line.
   4. Single Outlet Emitters: models per drawings.
   5. Air/Vacuum Relief Valves: Install each independent subsurface irrigation zone with an Air/Vacuum Relief Valve at the zone's highest point(s).
   6. Disc Filter: Install at each zone valve or on the main line to ensure proper filtration.

2.09 AIR PRESSURE DEVICE

A. The air pressure device shall consist of a 1 inch (25.4 mm). quick coupling valve installed on a triple swing joint assembly suitable for use to purge the irrigation system with compressed air.

PART 3 EXECUTION

3.01 GENERAL

A. Coordinate installation with other contractors and with landscape planting, especially plant and tree locations, fine grading, and soil preparation for planting areas per Section 32 93 00 LANDSCAPE WORK.

B. Exercise extreme care in excavating and working near existing utilities. Contractor is responsible for damages to utlities which are caused by his operations or neglect.

C. No machine treching, unless approved by Landscape Architect, is to be done within drip line of trees. Trenching within driplines shall be done by hand, tunneling, or boring or other method as instructed by Landscape Architect.

3.02 PREPARATION

A. Physical Layout:
   1. Irrigation lines indicated on the Drawings are diagrammatical. Stake the location of each run of pipe and the location of all sprinkler heads and valves for review by the Landscape

Architect prior to trenching. Piping shall be routed around trees and shrubs to avoid damage to existing plants.

2. Piping and head layout is shown on plans in schematic form only. All pipes to be installed at a 4” offset from curbs, walks, and walls, and other impermeable elements.

B. Water Supply:
   1. Sprinkler Irrigation system shall be connected to water supply points-of-connection as indicated on the drawings.
   2. Connections shall be made at approximate locations per drawings. Contractor is reponsible for changes caused by actual site conditions.

C. Earthwork
   1. Excavation required for the installation of the irrigation system shall conform to ASTM F 690.
   2. Trenches shall be straight and true with the bottom uniformly sloped to low points.
   3. Provide minimum cover over top of underground piping according to the following:
      a. Irrigation Main Piping: 24” min below finished grade
      b. Irrigation Lateral Piping: 18” min below finished grade
      c. Drain Piping: 12”
      d. Drip Irrigation in Turf Grass: 4” or per the drawings. See installation below.
      e. Drip irrigation in plant beds: 2” or per the drawings. See installation below.
      f. Pipe crossing roadways or parking areas: Minimum of 36 inch (914.4 mm). cover over pipe.
      g. Wiring: Install to depth of main lines. Provide minimum 18 inch (457.2 mm). cover for wiring when not in same trench as irrigation main.
   4. Drain Pockets: Excavate to sizes indicated. Backfill with cleaned gravel or crushed stone to 12” below grade. Cover gravel or crushed stone with sheet of asphalt sturated felt and backfill remainder with excavated material.

D. Backfill
   1. Trenches shall not be backfilled util all required tests are performed. Once testing is complete, trenches shall be carefully backfilled with excavated materials approved for backfilling consisting of earth, loam, sandy clay, sand, or other approved materials, free from large clods of earth or stones. Backfill shall be mechanically compacted in landscape areas to a dry density equal to adjacent undisturbed soil. Backfill will conform to adjacent grades without dips, sunken areas, humps, or other surface irregularities.
   2. Initial backfill: A fine, granular material backfill will be initially placed on all lines (minimum 4” depth). No foreign matter larger than one-half (1/2) inch in size is permitted.
   3. Where rock is encourtered in trenching, 4” of sand above and below the pipe will be used as the initial backfill.
   4. Flooding of trenches requires approval of Landscape Architect.
   5. If settlement occurs and subsequent adjustments in pipes, valves, sprinkler heads, lawn or planting, or other construction are necessary, the. Contractor shall make all required adjustments without cost to the Owner.

E. Existing Lawns
   1. Where trenching is required across exsting lawns, or in the event of changes or repairs after new lawn has been established, uniformly cut and place strips of sod six (6) inches wider than the trench. Remove sode in rolls of suitable size for handlingg and keep moistened until replanted.
      a. Backfill trench to within 6 inches (152.4 mm) of finished grade and compact. Continue fill with topsoil and compact to bring sod even with existing lawn.
      b. Replant sod within 2 days after removal; roll and water generously.
      c. Resod and restore to original condition all sod areas not in healthy condition equal to adjoining lawn 30 days after replanting.

3.03 INSTALLATION

A. General – Unless otherwise indicated, Contractor shall comply with requirements of the governing Uniform Plumbing Code.

B. Backflow Preventers
   1. Make required connection to water supply according to local codes and manufacturer's written instructions.
   2. Install pressure type backflow devices at required grade in accordance with local Plumbing Code. Exposed main line and mainline risers above PVC pipe main elevation shall be copper. Install one brass union in riser downstream of device.
   3. Insulate all above groound piping.
   4. Provide backflow certification to Landscape Architect or Owner within 10 days of backflow device installation and operation.

C. Pipes
   1. Piping Mains and Laterals – Lay out sprinkler main lines. And perform ine adjustments and site modifications to laterals prior to excavation. Lay pipe on solid subbase, uniformly sloped.
   2. PVC Pipe Assembly
      a. Cut PVC pipe square and deburr. Clean pipe and fittings using primer as recommended by manufacturer. Use purple tinted primer to aid in visual inspection.
      b. Use PVC Solvent Cement on the inside of the fitting and pipe mating surface. Cure joints as recommended by the manufacturer and keep pipe and fittings out of service during curing period.
      c. Install and plastic pipe in dry weather, when temperature is above 40 degrees Fahrenheit (4.44 degrees Celsius). and in accordance with manufacturer's instructions. Before testing, allow joints to cure at least 24 hours at temperatures above 40 degrees F
      d. Snake plastic pipe in trenches as recommended by pipe manufacturer to provide for expansion and contraction.

D. Sleeves
   1. Furnish and install sleeves where indicated on the Drawings. Sleeves shall be of size specified herein, and shall extend 12 inch (304.8 mm). beyond edge of walls or pavements, as applicable.
   2. Where boring is required for new sleeves (refer to drawings), it shall be a "wet bore."
   3. Perform trench and backfill in accordance with these specifications.

E. Joints
   1. General - Connections between plastic pipe and metal valves or steel pipe shall be made with threaded fittings using plastic toe nipples or shall be made with adapters and a nonhardening pipe compound applied to male threads.
   2. Threaded Joints for Plastic Pipes:
      a. Use Teflon tape on the threaded PVC fittings except where Marlex fittings are used.
      b. Use strap-type friction wrench only: Do not use metal-jawed wrench.
      c. When connection is plastic to metal, male adapters shall be used. Male adapter shall be hand tightened, plus one turn with a strap wrench. Joint compound shall be Teflon tape or equal upon approval.
   3. Threaded Joints for Galvanized Steel Pipes:
      a. Factory-made nipples shall be used wherever possible. Field-cut threads in pipes will be permitted only where absolutely necessary and approved by Architect; when field threading, cut threads accurately on axis with sharp dies.
      b. Use pipe joint compound or Teflon tape to male threads only.
   4. Joints for Polyethylene Pipes:
      a. Double-clamp all connections 1-1/4 inch (32 mm). diameter and greater.

b. Make all connections between polyethylene pipes and metal valves or pipes with threaded fittings using male adapters.

5. Concrete Thrust Blocks
   a. Install where rubber-gasketed irrigation main changes direction (ells and tees) and where the rubber-gasketed main terminates.
   b. Pressure tests shall not be made for a period of 36 to 48 hours following the. Completion of pouring of the blocks.
   c. Blocks for these mains shall be sized and placed in strict accordance with the pipe manufacturer's specifications and shall be of an adequate size and placed as to take all thrust created by the maximum internal water pressure.
6. Gate and Isolation Valves
   a. Install isolation and branch gate valves directly on main at locations indicated on the Drawings.
7. Where gate valves isolate branch mains of a smaller size, size valve to largest main and add reducing fittings downstream of valves.
8. Install valve and valve box to finish grade as indicated on the Drawings.
9. Electric Remote Control Valves
   a. Adjust automatic control valves to rovide flow rate at rated operating pressure required for each irrigation section.
   b. Install valves in valve boxes, arranged for easy adjustment and removal with top of box flush with finished grade. Locate valves to ensure ease of access for maintenance and so they do not interfere with other elements of the project.
   c. Clearance between the highest part of the valve and the bottom of the valve box lid shall be 2 inch (50.8 mm)., minimum, and 4 inch (101.6 mm)., maximum. The lid shall not rest on any part of the valve.
   d. Clearance between the top of the piping and the bottom of the valve box or the valve box knock-outs shall be 2 inch (50.8 mm)., minimum. Valve box shall not rest on piping.
   e. Clearance between the valve body and the sides of the valve box shall be 3 inch (76.2 mm)., minimum.
   f. Locate all valve boxes in areas that are not the focus of the landscape. Valve locations on the drawings are schematic only.
   g. Place each valve in its own valve box with a locking lid
   h. Bury a minimum of 4 bricks under the base of each box as support.
10. Remote Control Valve Tags – Attach one remote control valve tag to the stem of each electric remote control valve and number sequentially to correspond to the stantion number of the electronic controller.
11. Control Wires and Boxes
12. Control wire splices shall be made at electric valve locations. Make no splices between the controller and the remote control valve. Lay to the side of pipeline. Provide looped slack at valves and snake wires in trench to allow for contraction. Tie wires in bundles at 10 feet (304.8 cm) intervals. Control wires crossing under pavements shall be installed in conduit.
    a. Install a minimum of one extra control wire to the control valve located the greatest distance from the controller in each direction and label each end.
    b. Install tag to valve wire before making final connection.
    c. Separate color coding of control wires by satellite if required.
13. Install control wire splice boxes to cover wires for future valves.
14. Common ground wire shall be white. No other wires shall be white.
15. Solder splices and protect with splicing material. Provide 12 inch (304.8 mm) long expansion loop within 3 feet (91.44 cm) of each wire connection and splice on runs of wire 100 feet (3048 cm) or longer.
16. Gravel Backfill – Backfill valve boxes and control wire splice boxes with gravel, minimum 6 inch (152.4 mm) depth.

17. Sprinkler Heads
18. Flush irrigation lines with full head of water and install heads after hydrostatic test is completed.
19. Install heads plumb and perpendicular to finish grade at manufacturer's recommended heights.
20. Locate part-circle sprinklers to maintain a minimum distance of 4 inches (101.6 mm) from walls and 2 inches (50.8 mm) from other boundaries, unless otherwise indicated.
21. Check for uniformity of coverage and pattern correctness. Adjust for 100% coverage where requried.
22. Install nozzles with water running at reduced pressure, starting with the head closest to the valve.
23. Perform a final adjustment of arcs and radii at normal operating pressure.
24. Drip Irrigation
25. Install all dripperline as indicated on Drawings.
26. Tubing should not be visible through the mulch.
27. Air relief valves shall be installed in the emitter tubing, at high elevation points as indicated on the drawing.
28. All in-line emitter tubing shall be installed on the high side of the plant material being watered to help insure dispersion of the water.
    a. In-line emitter tubing is to be installed 4 inches (101.6 mm) from all planter edges, curbs and walls. Spacing of in-line emitter tube is per drawings and center-to-center in all irrigated areas.
    b. Plant Beds: Install drip lines 2 inches (50.8 mm) below soil surface to the top of pipe
    c. Turf and Grass Areas: Install drip line 4 inches (101.6 mm) below the surface of the sod or soil to the top of the pipe.
29. Use only Teflon tape on all threaded connections.
30. In-line drip tubing shall be secured with stakes. Stakes shall be spaced to ensure that tubing does not shift location in presence of foot traffic, operations, gravity on slope installations, or environmental effects. Stake in-line drip tubing at minimum 5-foot intervals to prevent movement.
31. When installing drip lines on-surface, install soil staples as listed below:
    a. Sandy Soil - One staple every three (3’) feet and two (2) staples on each change of direction (tee, elbow, or cross).
    b. Loam Soil - One staple every four (4’) feet and two (2) staples on each change of direction (tee, elbow, or cross).
    c. Clay Soil - One staple every five (5’) feet and two (2) staples on each change of direction (tee, elbow, or cross).
32. Pressure regulator, or a pressure regulating valve, shall assure a 45-PSI downstream pressure entering drip supply header. Pressure shall be verified by contractor to assure proper operating pressure for the in-line emitter tubing at maximum linear run of 280 feet (8534.4 cm). Contractor may need to manifold pressure regulators to reach the mid-range flow of the regulator.
33. Cap or plug all openings as soon as lines have been installed to prevent the intrusion of materials that would obstruct the pipe. Leave in place until removal is necessary for completion of installation.
34. Thoroughly flush all water lines before installing valves.
35. Electric Controller
36. Install per local code and manufacturer's published instructions, at location indicated on the Drawings.
37. When using conventional wiring, Connect remote control valves to controller in clockwise sequence to correspond with station setting beginning with Stations 1, 2, 3, etc.
38. Provide power to controllers at a location determined on site by Owner. Contractor shall supply power as required from nearby sources. Follow local governing codes in all electrical work.

39. Afix a non-fading copy of the irrigation diagram to the inside of the ccabinet door below controller's name. Irrigation diagram shall clearly show all valves operated by the controller, station numbers, and type of planting irrigated.
40. All controllers shall be fully grounded in strict conformance with manufacturer's published grounding instructions and have full manufacturer-approved lightning protection.
    a. Controller and pump shall have separate grounding. Grounding rods shall be separated a minimum of 20 feet (609.6 cm) between grids. Grids shall be installed in an irrigated area.
    b. When tested, grounding grid shall have an earth resistance no greater than 5 ohms. If earth resistance is greater than 5 ohms, additional grounding plates and enhancement material shall be added to system until desired test results have been meet.

3.04 TESTING AND COMPLETION

A. Observation: The Owner's Representative will be on site at various times to insure the system is being installed according to the Specifications and Drawings.

B. Hydrostatic Tests: Test irrigation main line, before backfilling trenches, to a hydrostatic pressure of not less than operating pressure for six hours. Piping may be tested in sections to expedite work. Remove and repair or replace piping and connections which do not pass hydrostatic testing. Pipe joints shall not be backfilled over, center load pipe with joints exposed until the installation has been inspected, tested and approved in writing by the Owner's Representative.

C. Pressure shall be maintained for a 24 hour leak test before backfilling and prior to the installation of remote control valves, quick coupling valves, and other types of valve assemblies.

D. Threaded caps shall be installed in place of remote control valves, quick coupling valves, and other type of valve assemblies.

E. Perform all tests prior to backfilling over pipe joints.

F. Coverage Test: After completion of the system, test the operation of entire system and adjust sprinklers as directed by the Owner's Representative. Demonstrate to the Owner's Representative that all irrigated areas are being adequately covered. Furnish and install materials required to correct inadequacies of coverage due to deviations from the Drawings or where the system has been willfully installed when it is obviously inadequate or inappropriate without bringing it to the attention of the Owner.

G. The Owner's Representative shall be notified 48 hours in advance for inspections.

H. During final inspection, the contractor shall be responsible for having two-way communication and sufficient personnel to provide instantaneous communication between the inspection area and the controller for the system.

I. Instruct Owner's designated personnel in proper operation of irrigation system, including programming controller; valves; adjustment of sprinkler heads.

3.05 BACKFILL AND COMPACTING

A. After system is operating and required tests and inspections have been made, backfill excavations and trenches with clean soil, free of debris.

B. Backfill for all trenches, regardless of the type of pipe covered, shall be compacted to minimum 95% density under pavements, 85% under planted areas.

C. Dress off all areas to finish grades.

3.06 PRESSURE SETTING

A. Prior to final inspection, adjust each remote control valve to an agreed operating pressure using a temporary pressure gauge on schrader valve and making necessary adjustments while valve is operating.

3.07 CLEAN UP

A. Upon completion of all installation work, Contractor shall remove all debris, leftover materials, and equipment from the site in a safe and legal manner.

B. Contractor shall regrade, lightly compact, and replant around sprinkler heads where necessary to maintain proper vertical positioning in relation to established grade. Fill all depressions and eroded channels with sufficient soil mix to adjust grade to ensure proper drainage. Compact lightly, and replant filled areas in accordance with Drawings.

3.08 SEASONAL SHUTDOWN

A. Winterization: The irrigation system is designed to be completely drained to protect pipe from bursting prior to freezing temperatures. To adequately drain the system the following procedure must be followed:
   1. Air blow-out
      a. Set automatic controller stations to 3 minutes timing.
      b. Attach hose from portable air compressor to 1-inch air inlet installed on main line at back flow prevention device in basement.
      c. Operate compressor at 100 cubic feet per second at 60-80 psi (551.58 kPa).
   2. Manual drain valves: Open manual drain valves located at low points on the main line to drain main completely after air blow-out has been completed.

3.09 SEASONAL START UP

A. Prior to the start of the second irrigation season, the system shall be restarted, checked, and repaired. This start up procedure shall include but not be limited to:
   1. Testing of all system components, (valves, heads, controllers, quick coupling valves, piping, etc.) for proper working order.
   2. Adjustments, repair, or replacement of all system components that are not in proper working order.
   3. Instruction of Owner's designated personnel in proper seasonal start up procedures.

END OF SECTION 328400

This page intentionally left blank

SECTION 329300
LANDSCAPE WORK

PART 1 GENERAL

1.01 SECTION INCLUDES

A. Plants
B. Planting Soil
C. Compost
D. Water
E. Fertilizer
F. Mulch
G. Guying and Staking Material
H. Filter Fabric (Weed Control Fabric)
I. Root Barrier
J. Edging

RELATED REQUIREMENTS

A. Section 32 80 00, IRRIGATION SYSTEM; Irrigation system.

REFERENCE STANDARDS

ASTM D698 - STANDARD TEST METHODS FOR LABORATORY COMPACTION CHARACTERISTICS OF SOIL USING STANDARD EFFORT (12,400 FT-LBF/FT3 (600 KN-M/M3)); 2012 (REAPPROVED 2021).

A. American National Standards Institute, Inc. (ANSI): Z60.1 American Standard for Nursery Stock (Sponsor: American Nursery and Landscape Association)
B. A 300 American National Standards for Tree Care Operations
C. Tree Care Industry Association (TCIA) standards
D. ANSI A300 Pruning Standard Practices

DEFINITIONS

A. Backfill: The earth used to replace or the act of replacing earth in an excavation.
B. Balled and Burlapped Stock: Plants dug with firm, natural balls of earth in which they were grown, with ball size not less than sizes indicated; wrapped with burlap, tied, rigidly supported, and drum laced with twine with the root flare visible at the surface of the ball as recommended by ANSI Z60.1.
C. Balled and Potted Stock: Plants dug with firm, natural balls of earth in which they are grown and placed, unbroken, in a container. Ball size is not less than sizes indicated.
D. Bare-Root Stock: Plants with a well-branched, fibrous-root system developed by transplanting or root pruning, with soil or growing medium removed, and with not less than minimum root spread according to ANSI Z60.1 for type and size of plant required.
E. Container-Grown Stock: Healthy, vigorous, well-rooted plants grown in a container, with a well-established root system reaching sides of container and maintaining a firm ball when removed from container. Container shall be rigid enough to hold ball shape and protect root mass during shipping and be sized according to ANSI Z60.1 for type and size of plant required.
F. Fabric Bag-Grown Stock: Healthy, vigorous, well-rooted plants established and grown in-ground in a porous fabric bag with well-established root system reaching sides of fabric bag. Fabric bag size is not less than diameter, depth, and volume required by ANSI Z60.1 for type and size of plant.
G. Finish Grade: Elevation of finished surface of planting soil.

H. Manufactured Topsoil: Soil produced off-site by homogeneously blending mineral soils or sand with stabilized organic soil amendments to produce topsoil or planting soil.

I. Pesticide: A substance or mixture intended for preventing, destroying, repelling, or mitigating a pest. This includes insecticides, miticides, herbicides, fungicides, rodenticides, and molluscicides. It also includes substances or mixtures intended for use as a plant regulator, defoliant, or desiccant.

J. Pests: Living organisms that occur where they are not desired, or that cause damage to plants, animals, or people. These include insects, mites, grubs, mollusks (snails and slugs), rodents (gophers, moles, and mice), unwanted plants (weeds), fungi, bacteria, and viruses.

K. Planting Area: Areas to be planted.

L. Planting Soil: Standardized topsoil; existing, native surface topsoil; existing, in-place surface soil; imported topsoil; or manufactured topsoil that is modified with soil amendments and perhaps fertilizers to produce a soil mixture best for plant growth.

M. Plant; Plants; Plant Material: These terms refer to vegetation in general, including trees, shrubs, vines, ground covers, ornamental grasses, bulbs, corms, tubers, or herbaceous vegetation.

N. Root Flare: Also called "trunk flare." The area at the base of the plant's stem or trunk where the stem or trunk broadens to form roots; the area of transition between the root system and the stem or trunk.

O. Stem Girdling Roots: Roots that encircle the stems (trunks) of trees below the soil surface.

P. Subgrade: Surface or elevation of subsoil remaining after excavation is complete, or the top surface of a fill or backfill before planting soil is placed.

Q. Subsoil: All soil beneath the topsoil layer of the soil profile, and typified by the lack of organic matter and soil organisms.

R. Surface Soil: Soil that is present at the top layer of the existing soil profile at the Project site. In undisturbed areas, the surface soil is typically topsoil; but in disturbed areas such as urban environments, the surface soil can be subsoil.

SUBMITTALS

A. Prior to start of construction, furnish to the Landscape Architect manufacturer's product data and manufacturer's application instructions specific to the project:
   1. Soil Amendments (as identified in Agronomic Soils Report)
   2. Fertilizer (as identified in Agronomic Soils Report)
   3. Stakes, Guys, Tree Ties, and Vine Ties
   4. Seed Mixtures
   5. Mulch
   6. Edging Material
   7. Filter Fabric
   8. Drainage Materials
   9. Root Barrier
   10. Rock Mulch

B. Submit other data substantiating that materials comply with specified requirements including, but not limited to, tags, labels, and/or manufacturer’s literature.

C. PLANTING SCHEDULE
   1. Submit proposed planting schedule AT LEAST two weeks prior to planting any materials, indicating dates for each type of landscape work and:
      a. Quantity
      b. Size
      c. Botanical Name
      d. Plant Unit Price

e. Installation Unit Price

2. Correlate delivery and installation with specified maintenance periods to provide maintenance from date of substantial completion. If dates need to be revised after acceptance of planting schedule, document reasons for delays and submit for acceptance.
3. If any plant specified is not obtainable, submit a written substitution request to the Landscape Architect.
4. Plant photographs: Include color photographs in digital format of each required species and size of plant material. Photos will be of the actual material tagged at the nursery that will be used for the project. No plants may be delivered or planted prior to review by the Landscape Architect.
   a. Take photographs from an angle depicting the true size and condition of the typical plant to be furnished.
   b. Include a person, scale rod, or other measuring device in each photograph.
   c. For species where more than 20 plants are required, include a minimum of 2 photographs showing the average plant, the best quality plant, and the worst quality plant to be furnished. Identify each photograph with the full scientific name of the plant, plant size, and name of the growing nursery.

D. Certificates: Labels from the manufacturer certifying that the product meets the specified requirements shall be submitted for the following materials:
   1. Bone Meal
   2. Commercial Fertilizer
   3. Limestone
   4. Compost

E. Test Reports: Test reports from an approved testing agency indicating compliance with the specifications shall be submitted for topsoil and any other materials designated by the Architect.

OWNER’S INSPECTION AND TESTING

A. Work will be subject to inspection at all times by the Architect. The Owner reserves the right to engage an independent testing laboratory in accordance with requirements of Section 01 45 00, QUALITY CONTROL to analyze and test materials used in the construction of the work. Where directed by the Architect, the testing laboratory will make material analyses and will report to the Architect whether materials conform to the requirements of this specification.
   1. Cost of tests and material analyses made by the testing laboratory will be borne by the Owner when they indicate compliance with the specification, and by the Contractor when they indicate non-compliance.
   2. Testing equipment will be provided by and tests performed by the testing laboratory.

CONTRACTOR'S INSPECTION AND TESTING

A. The Contractor shall engage an independent testing agency, experienced in the testing of agricultural soils and acceptable to the Architect, to perform the topsoil/planting soil tests and analyses specified herein. All costs associated with testing shall be the Contractor's responsibility.
   1. Particle size analysis shall include the following gradient of mineral content:
      a. Size in mm
      b. + 0.08 inch (2 mm)
      c. 1-0.08 inch (2 mm)
      d. 0.5-0.04 inch (1 mm)
      e. 0.25-0.02 inch (0.5 mm)
      f. 0.1-0.01 inch (0.25 mm)
      g. 0.05-0 inch (0.1 mm)
      h. 0.002-0 inch (0.05 mm)
      i. < 0 inch (0 mm)
   2. Chemical analysis shall include the following:

a. pH and buffer pH
b. Percentage of organic content by oven-dried weight
c. Nutrient levels by parts per million, including phosphorus, potassium, magnesium, manganese, iron, zinc, and calcium. Nutrient test shall include testing laboratory recommendations for supplemental additions to the soil, if necessary, based on the requirements for ornamental horticultural plants. Recommendations shall include rates at which additives are to be applied.
d. Soluble salt by electrical conductivity of a 1:2 soil/water sample.

SOURCE QUALITY CONTROL

1. Selection of Plant Materials: Contractor shall submit to Landscape Architect a complete list of all proposed nurseries including location, contact #, plant list for each nursery, all proposed substitutions, credits and/or additional charges. No tagging will occur until this list is complete and submitted. Contractor shall be responsible for delays if list is not submitted complete and in advance of proposed tagging dates.
   a. Ensure all materials meet the requirements of this section. Proposed materials shall be flagged by the nurseries for review by the Contractor and the Landscape Architect.
   b. Schedule a meeting with the Landscape Architect for viewing plant material at the nursery. A minimum of four weeks shall be allowed for this viewing prior to time that plants are to be dug.
   c. Viewing and/or sealing of plant materials by the Architect at the nursery does not preclude the Architect's right to reject material at the site of planting.
   d. Landscape Architect will provide a maximum of two (2) tagging trips.

QUALITY ASSURANCE

A. Nursery Qualifications: Company specializing in growing and cultivating plants, with minimum 2 years' experience.

B. Installer Qualifications:
   1. Firm specializing in work of this Section with minimum 5 years of experience.
   2. Professional Membership: Installer shall be a member in good standing of either the Professional Landcare Network or the American Nursery and Landscape Association.
   3. Installer will maintain an experienced full-time supervisor on Project site when work is in progress.

C. Pesticide Applicator: State licensed, commercial.

D. Soil-Testing Laboratory Qualifications: An independent or university laboratory, recognized by the State Department of Agriculture, with the experience and capability to conduct the testing indicated and that specializes in types of tests to be performed.

E. All tree trimming and removal shall be done in accordance with Tree Care Industry Association (TCIA) standards and ANSI A300 Pruning Standard Practices.

UNAVAILABILITY OF PLANT MATERIALS

A. Before changes or substitutions can be made due to unavailability of plant material, submit satisfactory evidence that the Contractor has advertised for a one month period in a trade journal such as the "American Nurseryman", (Tel. 312-427-7339 and Fax: 312-427-7346), with no response, or has undertaken other methods of locating plant material acceptable to the Landscape Architect.

DELIVERY, STORAGE, AND HANDLING

A. Transportation of Plant Material: Plants transported to the project in open vehicles shall be covered with tarpaulins or other suitable covers securely fastened to the body of the vehicle to prevent injury to the plants. Closed vehicles shall be adequately ventilated to prevent overheating of the plants. Trees shall not be transported when daytime air temperatures are below 20.
   1. Plants shall be kept moist, fresh, and protected at all times. Such protection shall encompass the entire period during which the plants are in transit, being handled, or are in

temporary storage.

2. Unless otherwise authorized by the Landscape Architect, notify the Landscape Architect at least two working days in advance of the anticipated delivery date of any plant material.

B. Storage: Unless specific authorization is obtained from the Landscape Architect, unprotected plants shall not remain on the site of work longer than three days prior to being planted.
   1. Plants not immediately planted will have their earth balls kept moist, not be allowed to freeze, and the solidity carefully preserved.
   2. Both the duration and method of storage of plant materials shall be subject to the approval of the Landscape Architect.

C. Handling of Plant Materials: Exercise care in handling plant materials to avoid damage or stress.

REJECTION OF MATERIALS

A. Evidence of inadequate protection following digging, carelessness while in transit, or improper handling or storage, shall be cause for rejection.

B. Upon arrival at the temporary storage location or the site of the work, plants shall be inspected for proper shipping procedures. Plants with roots dried out, large branches broken, balls of earth broken or loosened, or areas of bark torn shall be subject to rejection by the Contractor or Landscape Architect on site at time of delivery.

C. Rejected plants shall be removed from the area of work and replaced with the same species of the required size and quality.

DIGGING/PLANTING SEASONS

A. Spring digging of plant materials may commence as soon as the ground has thawed and weather conditions make it practicable to dig at the nursery.
   1. Deciduous plants shall not be dug after they have leafed out.
   2. Broadleaf evergreens and conifers shall not be dug after new growth or candle push is visible.

B. Fall digging of plant materials may commence after dormancy has begun and shall continue until such time as the ground has frozen or weather conditions make it impractical to work.
   1. Fall digging hazards shall conform to American National Standards Institute, Inc. (ANSI) species and guidelines.

C. Planting shall only be performed when weather and soil conditions are suitable for planting the material specified, in accordance with locally accepted practice, approval of the Landscape Architect, and to maintain the Contractor’s guarantee.

SUBSTANTIAL COMPLETION

A. The Landscape Architect shall review all work of this Section for Acceptance for Substantial Completion upon receipt of written notice of completion by the Contractor. Submit request for Substantial Completion review by Landscape Architect at least ten calendar days before the anticipated date of inspection.

B. Acceptance of plant material by the Architect shall be for general conformance to specified size, character, and quality, and shall not diminish responsibility for full conformance to the Contract Documents.

C. Upon completion and reinspection of all repairs or renewals necessary as required by the Landscape Architect, recommendation for Acceptance for Substantial Completion of the work of this Section be given by the Landscape Architect to the Owner.

D. Acceptance in Part
   1. The work may be Accepted in parts when it is deemed to be in the Owner's best interest to do so and when permission is given to the Contractor in writing to complete the work in parts.
   2. Acceptance and use of such areas by the Owner does not waive any other provisions of this Contract.

MAINTENANCE

A. The Contractor shall maintain plant material until the completion of the guarantee period and Final Acceptance of work, as described in paragraph 1.16B of this Section.

B. Following Final Completion, maintenance of plant material shall become the Owner's responsibility. The Contractor shall provide instructions and service as follows.
   a. Provide Owner with typewritten recommended maintenance program at time of Final Completion.
   b. Make as many periodic inspections or reviews as necessary during the guarantee period, at no additional cost to the Owner, to inspect the condition of all plant materials. Submit a written report of each inspection to the Owner outlining any corrective measures that may be required to keep the guarantee valid.

GUARANTEE

A. Plants shall be guaranteed for a period of one year after the date of Acceptance of Final Completion by the Owner.
   1. When the work is Accepted in parts, the guarantee periods shall extend from each of the partial Acceptances to the terminal date of the last guarantee period. Thus, all guarantee periods terminate at one time.

B. Plants shall be healthy, free of pests and disease, and in flourishing condition at the end of the guarantee period. Plants shall be free of dead and dying branches and branch tips, and shall bear foliage of normal density, size, and color.

C. Replace dead plants and all plants not in a vigorous, thriving condition, as determined by the Landscape Architect during and at the end of the guarantee period, without cost to the Owner, as soon as weather conditions permit and within the specified planting period.
   1. Replacements shall closely match adjacent specimens of the same species. Replacements shall be subject to all requirements stated in this Specification.
   2. Make all necessary repairs due to plant replacements. Such repairs shall be done at no extra cost to the Owner.
   3. The guarantee of all replacement plants shall extend for an additional one year period from the date of their Acceptance after replacement. In the event that a replacement plant is not acceptable during or at the end of the said extended guarantee period, the Owner may elect one more replacement or credit for each item.

D. At the end of the guarantee period, and no less than five days prior to final inspection, staking and guying materials, as well as tree wrap and ties shall be removed from the site.

PROJECT CONDITIONS

A. Field Measurements: Verify actual grade elevations, service and utility locations, irrigation system components, and dimensions of plantings and construction contiguous with new plantings by field measurements before proceeding with planting work.

B. Weather Limitations: Proceed with planting only when existing and forecasted weather conditions permit planting to be performed when beneficial and optimum results may be obtained. Apply products during favorable weather conditions according to manufacturer's written instructions and warranty requirements.

C. Coordination with lawns: Plant trees and shrubs after finish grades are established and before planting lawns unless otherwise acceptable to the Landscape Architect.
   1. When planting trees and shrubs after lawns, protect lawn areas and promptly repair damage caused by planting operations.

D. Utilities:
   1. Verify locations for all existing utilities, whether shown on plans or not. Notify members of Underground Service Alert (Dig Alert) two (2) working days in advance of performing any excavation work by calling 811 or 1-800-227-2600.

2. After determining the location of underground utilities, perform work in a manner which will avoid possible damage. Hand excavate as required. Maintain grade stakes set by others until removal is mutually agreed upon by parties concerned.

E. When conditions detrimental to plant growth are encountered (e.g. rubble fill, hardpan condition, adverse drainage conditions, obstructions, etc.) notify the Landscape Architect before planting. Remove all material deemed unsuitable for plant growth as directed by Landscape Architect.

F. Before Planting:
1. Perform an irrigation operation and coverage test and provide the results for review by the Landscape Architect.
2. Finish grade will be reviewed by Landscape Architect.

PART 2 PRODUCTS

19.01 PLANTS

A. General: Furnish nursery-grown plants true to genus, species, variety, cultivar, stem form, shearing, size, and any other features indicated in Plant Schedule or Plant Legend shown on Drawings and complying with ANSI Z60.1; and with healthy root systems developed by transplanting or root pruning.
1. Plants of a larger or smaller size, with a proportionate increase in size of roots or balls, may be used only if approved in writing by the Landscape Architect.
2. Trees with damaged, crooked, or multiple leaders; tight vertical branches where bark is squeezed between two branches or between branch and trunk ("included bark"); crossing trunks; cut-off limbs more than 3/4 inch (19.05 mm) in diameter; or with stem girdling roots will be rejected.
3. Collected Stock: Do not use plants harvested from the wild, from native stands, from an established landscape planting, or not grown in a nursery unless otherwise indicated.

B. Provide well-shaped, fully branched, healthy, vigorous stock, densely foliated when in leaf and/or budded, and free of disease, pests, eggs, larvae, and defects such as knots, sun scald, injuries, abrasions, and disfigurement. Plants shall have outstanding symmetrical form; heavily branched with an even branch distribution and a strong, straight, distinct leader where this is characteristic of species. Plants shall possess a normal balance for the species between height and spread. The Landscape Architect will be the final arbiter of acceptability of plant form.
1. Shade Trees: Single-stem trees with straight trunk, well-balanced crown, and intact leader, of height and caliper indicated, complying with ANSI Z60.1 for type of trees required.
2. Small Upright Trees: Branched or pruned naturally according to species and type, with relationship of caliper, height, and branching according to ANSI Z60.1.
3. Multi-stem Trees: Branched or pruned naturally according to species and type, with relationship of caliper, height, and branching according to ANSI Z60.1.
4. Deciduous Shrubs: Form and Size: Deciduous shrubs with not less than the minimum number of canes required by and measured according to ANSI Z60.1 for type, shape, and height of shrub.
5. Broadleaf Evergreens: Form and Size: Normal-quality, well-balanced, broadleaf evergreens, of type, height, spread, and shape required, complying with ANSI Z60.1.

C. Root-Ball Depth: Furnish trees and shrubs with root balls measured from top of root ball, which shall begin at root flare according to ANSI Z60.1. Root flare shall be visible before planting.

D. Where a size or caliper range is stated, at least 50% of the material shall be closer in size to the top of the range stated.

E. Do not prune plants before delivery.

F. Plants indicated as "B&B" shall be balled and burlapped.
1. Unless otherwise permitted by the Landscape Architect, plants shall be nursery grown.

2. Plants shall be grown for at least two years under climatic conditions similar to those in the locality of the Project.
3. Nursery grown plants shall be dug in the current planting season. No heeled-in plants or plants from cold storage that were dug in the previous season shall be accepted.

G. Container grown plants shall be well rooted and established in the container in which they were grown. They shall have grown in the container for a sufficient length of time for the root system to hold the planting medium when taken from the container, but not long enough to become root bound. Container grown plants exceeding the sizes indicated in ANSI Z60.1 shall have containers which are not less than 75% of the ball sizes for comparable B&B plant material. Each container plant shall be inspected and circling roots loosened or pruned as needed.

H. Canes or Trunk(s) and Branches:
1. Very well formed and sturdy with a distinct leader and no crotches that may interfere with growth of leader. Trees with included bark in crotches shall be avoided.
2. Branching shall be well spaced and uniformly distributed both vertically and around the circumference to form a well-balanced plant.
3. Scars shall be free of rot and not exceed ¼ the diameter of the wood beneath in greatest dimension unless completely healed (except pruning scars).
4. Pruning scars clean cut leaving little or no protrusion from the trunk or branch.
5. Graft union completely healed.
6. No mechanical or pest damage.
7. No extreme succulence.
8. Evidence of adequate twig growth in the past 2-4 years, and well-formed buds.

I. Foliage:
1. Densely supplied with healthy, vigorous leaves of normal size, shape, color and texture (except shrubs moved bare-root or deciduous shrubs when dormant).
2. One half of the foliage should be growing on the lower 2/3 of the trunk.
3. No chlorosis.
4. No more than 5% of total foliage shall be affected by pest or mechanical damage.

J. Root System:
1. Sturdily established and evenly distributed.
2. Container grown plants shall be well developed and hold the soil ball together when removed from the container.
3. Container grown plants shall not be excessively rootbound (except if deliberately grown rootbound to produce a dwarf plant).

PLANTING SOIL

A. Planting Soil
1. Planting soil shall be composed of a natural, fertile, friable soil typical of cultivated topsoils of the locality, suitable for the germination of seeds and support of vegetative growth, with additives, if required, to achieve particle distribution and organic content specifications.
   a. Topsoil shall be taken from a well-drained, arable site, free of subsoil, large stones, earth clods, sticks, stumps, clay lumps, roots, other objectionable, extraneous matter or debris nor contain toxic substances.
   b. Planting soil shall have a pH value between 5.5 and 6.5 and organic matter content of 5 to 10% of total dry weight.
2. Planting soil shall have the following mechanical analysis (see paragraph 1.07 for particle sizes):
   a. Approximate Particle Distribution
   b. Less than 10%
   c. 55 – 65%
   d. 15 – 25%
      1) 10– 20%
      2) 15 – 20%

3. Minimum planting soil nutrient levels shall be: Nitrogen @ 5% average of organic matter, Phosphorus @ .02 to .05% average of total soil content, Potassium @ 1.2% average of total soil content.
4. Provide the Architect with planting soil test results, as specified in Paragraph 1.06, before the start of planting operations. If planting soil does not fall within the required particle distribution, organic content, or pH range, it shall be adjusted to meet the specifications through the addition of sand, compost, limestone, or aluminum sulfate to bring it within the specified limits.
5. Planting soil for ericaceous shrubs shall have a pH value range of 4.5 to 5.0.

B. On-Site Compost Manufactured Planting Soil
1. Soil shall be subsoil material, excavated from planting areas on site. Soil shall be loose, friable, free of ice, snow and rubbish with no admixture of refuse or material toxic to plant growth. Soil shall be reasonably free of stones, lumps, roots and weeds or similar objects larger than 2 inches (50.8 mm) in diameter. Soil shall meet the following criteria:
a. Acceptable Range
b. 5.5 – 7.5
c. 25% - 55%
d. 2.5 mmhos (dS)
e. < 5% (by weight)
f. 0%
g. Particle Size
h. 100%
i. 95%
j. 70 %
k. 25%

C. Compost Manufactured Planting Soil
1. Compost manufactured planting soil shall be consist of soil, as described above, amended with compost, as specified in Paragraph 2.05. Compost manufactured topsoil shall be free of refuse, stones, lumps, roots and weeds or similar objects larger than 2 inches (50.8 mm) in diameter. Compost manufactured topsoil shall be uniformly mixed to meet the final requirements listed below:

ACCEPTABLE RANGE

5.5 – 8.0

22.01 30% - 55%

22.02 £2.0 MMHOS (DS)

22.03 > 5%

22.04 < 0.5% (BY WEIGHT)

22.05 PARTICLE SIZE

22.06 100% (BY VOLUME)

22.07 95% (BY VOLUME)

22.08 45 – 75% (OF TOTAL WEIGHT)

22.09 15 – 35% (OF TOTAL WEIGHT)

22.10 5 – 20% (OF TOTAL WEIGHT

A. The Contractor shall provide the Architect with planting soil test results, as specified in Paragraph 1.06, before the start of planting operations. If required to meet nutrient and pH ranges specified, as indicated by soil test results, fertilizer and limestone or aluminum sulfate shall be added and mixed with other planting soil components. All mixing shall be done with commercial mixing equipment sufficient to mix all components uniformly.

COMPOST

A. Compost shall be derived from organic wastes such as food and agricultural residues, animal manures, mixed solid waste and biosolids (treated sewage sludge) that meet all State Environmental Agency requirements. Pine bark shall be carbon source. The product shall be well composted, free of viable weed seeds and contain material of a generally humus nature capable of sustaining growth of vegetation, with no materials toxic to plant growth. pH shall fall between 6.0 and 7.0

WATER

A. Water shall be suitable for irrigation and shall be free from ingredients harmful to plant life.

FERTILIZER

A. Any fertilizer or foliar spray used shall be organic.

B. Submit product data sheets to Landscape Architect for review at least one week prior to application.

MULCH

A. Bark mulch shall be a composted bark mulch of uniform size and free from rot, leaves, twigs, debris, stones, or any material harmful to plant growth. No chunks 3 inch (76.2 mm). or more in size, and thicker than 1/4 inch (6.35 mm). shall be left on site.

B. Rock Mulch as indicated on drawings.
   1. All aggregate rock mulch shall be washed twice and clean prior to installation.

GUYING AND STAKING MATERIALS

A. Wood Stakes: Straight, sound, rough sawn lumber 2 inch (50.8 mm). x 2 in., if square, or 2-1/2 inch (64 mm). diameter, if round. Stakes shall be stained dark green. Wire for staking shall be 12-gauge steel.

B. Wires and Cables
   1. Guys and Tie Wires: ASTM A 641/A 641M, Class 1, galvanized-steel wire, two-strand, twisted, 0.106 inch (2.69 mm) in diameter.
   2. Tree-Tie Webbing: UV-resistant polypropylene or nylon webbing with brass grommets.
   3. Guy Cables: Five-strand, 3/16-inch- (4.8-mm-) diameter, galvanized-steel cable, with zinc-coated turnbuckles, a minimum of 3 inches (76.2 mm) long, with two 3/8-inch (10-mm) galvanized eyebolts.
   4. Flags: Standard surveyor's plastic flagging tape, white, 6 inches (152.4 mm) long.

C. Turnbuckles: ¼” x 73/4” Galvanized steel with a 21/2” in. lengthwise opening fitted with eyebolts, as manufactured by Crown Bolt Inc., or approved equal.

D. Hose: High quality braided rubber hose, 3/4 inch (19.05 mm). diameter and suitable length, black in color.

FILTER FABRIC (WEED CONTROL FABRIC)

A. Filter fabric (MIRAFI 140N or approved equivalent) shall be a needle punched non-woven polypropylene fabric having the following properties as required minimums:
   1. Weight of 4.5 oz./sq.yd.
   2. Thickness of 55 mil (1.397 mm).
   3. Tensile strength of 12 lb. per ASTM D 1682.
   4. Burst strength of 210 psi (1447.90 kPa) per ASTM D 3786.
   5. Equivalent opening size (EOS) no larger than U.S. Standard Sieve Size 100.
   6. Water Flow Rate: 250 gal./min./s.f.

ROOT BARRIERS

A. High density polypropylene root control barrier shall be by Deep Root (www.deeproot.com) or approved equivalent. Dimensions per Drawings.

EDGING

A. Steel edging as indicated on Drawings.

PART 3 EXECUTION

31.01 PREPARATION OF PLANT MATERIALS

A. Immediately before digging and following consultation with the Architect, spray all evergreen or deciduous trees in full leaf with Transplant Biostimulant, applying an adequate film over trunks, branches, twigs and foliage and apply Transplant Biostimulant to the root ball area

B. Dig, and ball and burlap (B&B) plants with firm, natural balls of earth, of depth and diameter not less than that recommended by the American Standard for Nursery stock. Plants moved with a ball will not be accepted if the ball is cracked or broken before or during planting operation. Remove all grass, weeds and accumulated soil resulting from nursery cultivation from the top of the root ball prior to digging so that the original trunk flare shows on top of the root ball.

C. Use only natural burlap and jute twine. Do not use synthetic fibers or wire to ball and burlap root balls. Wire baskets will be acceptable if removed in accordance with these specifications.

D. All plant material in transit or temporary stored shall be covered with burlap or similar covering to keep plants from drying out.

E. Ship and store bare root material in refrigerated trucks and storage areas. Keep roots moist and cool until time of planting.

F. If the construction schedule requires trees over 3 ½" in caliper to be planted in the fall, that are of a species considered to be difficult to transplant in the fall, these trees shall be root pruned the previous spring in the nursery.
   1. The Architect will determine tree species to be root pruned.
   2. A trench shall be dug around the tree at the limit of the proposed root ball to a minimum depth of 24" and back-filled.
   3. A 3" high saucer shall be built around the tree outside the edge of the trench.
   4. The tree shall be guyed or braced.
   5. The tree shall be watered as necessary through the summer.
   6. When the tree is dug in the fall, the digging shall be done using methods that preserve the new root growth growing in the soft soil of the trench.
   7. Root pruning, when required, shall be done at no additional cost to the Owner, except for owner pre-purchased trees.

EXAMINATION OF SUBGRADE

A. Examine subgrade and rough grading before planting. Alert Architect to unacceptable rough grading or subgrade conditions.

PREPARATION OF SUBGRADE

A. After subgrade levels have been reached and immediately prior to placing planting soils, the entire subgrade area shall be loosened to a minimum depth of 12 inches (304.8 mm) utilizing the bucket of a backhoe or equivalent equipment.

B. Any subgrade areas which have become heavily compacted (defined as exceeding 86% - 88% compaction ASTM C698 Standard Proctor) including, but not limited to, temporary parking areas, material stockpile areas, temporary roadways, construction areas, areas shown on the plans, or areas identified by Architect shall be deep-scarified. Immediately prior to placing soils, heavily compacted areas shall be loosened to a minimum depth of 36 inches (914.4 mm) using the teeth of a backhoe or other suitable equipment. Frequency of compaction tests shall be one per 200 sq feet (0.21529 sq cm).

C. Using a wide-track bulldozer size D-5 or smaller, compact the scarified subgrade to 86% - 88% compaction ASTM D698 Standard Proctor. Contractor shall provide shovel dug test pits to the full depth of the mitigation, where located per the direction of the Architect, in order for the Architect to review whether the work has been done as required. Backfill the pits after the

review(s).

D. Confirm that the subgrade is at the proper elevation and that no further earthwork is required to bring the subgrade to proper elevations. Provide a written report to Architect indicating that subgrade has been placed to the required elevations, has been decompacted according to the Contract Documents and is ready for inspection at least 3 days prior to placing planting soil. Perform no work of placing and spreading planting mixes until elevations have been confirmed and written report has been accepted by the Owner's Representative.

E. After the soils have been loosened and inspected, topsoil may be spread by using a wide track bulldozer size D-5 or smaller or may be dumped and spread with bucket of a backhoe from the edge of the loosened area. No rubber-tired equipment or heavy equipment except for small bulldozer shall pass over the subsoils (subgrade) after they have been loosened. If Contractor plans to utilize such areas for any use of heavy equipment, this should be carried out prior to beginning the process of loosening soils or filling in that area, or it shall be rescarified to meet this specification requirement.

SOIL DRAINAGE/DETRIMENTAL SOILS

A. Test drainage of five planting pits in locations as directed by the Architect. Pits shall be filled with water twice in succession. The time at which water is put into the pit for a second filling shall be noted. Architect shall then be notified of the time it takes for pit to drain completely. Planting operations shall not proceed until Architect has reviewed test drainage results.
   1. To test drainage, dig a whole about 1 foot (30.48 cm) deep. Fill with water and allow it to drain completely. Immediately refill the pit and measure the depth of the water with a ruler. 15 minutes later, measure the drop in water in inches, and multiply by 4 to calculate how much water drains in an hour.
   2. Less than 1 inch (25.4 mm) per hour is poor drainage, indicating the site may stay wet for periods during the year. Plants that don't tolerate poor drainage will suffer. 1 to 6 inches (152.4 mm) of drainage per hour is desirable. Soils that drain faster than 6 inches per hour have excessive drainage, and you should consider choosing plants that tolerate dry conditions and "droughty" soils.

LAYOUT OF PLANTING AREAS

A. Individual plant locations and outlines of shrub and ground cover areas to be planted shall be staked by the Contractor in ample time to allow inspection by the Architect.

B. Digging shall not begin until locations are approved by the Architect.

C. Location of trees shall be staked using color coded stakes. A different stake color shall be used for each tree species.

PLANT PIT EXCAVATION

A. Planting pits for trees and shrubs shall be excavated to the depth and dimensions indicated on the Drawings.

B. Excavation shall not begin until locations are approved by the Architect.

FILTER FABRIC

A. Filter fabric shall be installed where indicated on the Drawings. Unless otherwise indicated on the Drawings, filter fabric shall be overlapped 6 inch (152.4 mm). along all edges.

STEEL EDGING

A. Steel edging shall be installed at locations indicated on the Drawings. Refer to Section 055001, METAL FABRICATIONS -SITEWORK.

SPREADING OF PLANTING SOIL

A. Planting soil shall be spread in lifts not greater than 12 inches (304.8 mm) and compacted to a density between 82% and 86% Standard Proctor Maximum Dry Density in accordance with ASTM D698. The surface area of each lift, including the subgrade after it has been compressed by a backhoe, shall be scarified by raking prior to placing the next lift.

B. Place and spread planting medium to a depth greater than required such that after settlement, finished grade shall conform to the lines, grades and elevations shown on the Drawings. Ensure proper drainage in an uninterrupted pattern free of hollows and pockets.

C. Remove stiff clods, lumps, brush, roots, stumps, litter and other foreign material and stones over 1 inch (25.4 mm) diameter and legally dispose of off-site.

D. Surfaces shall be graded and smoothed, eliminating all sharp breaks by rounding, scraping off bumps and ridges, and filling in holes and cuts.

PLANTING

A. Tree, shrub, and groundcover beds shall be excavated to the depth and widths indicated on the Drawings. If the planting pit for any tree is dug too deep, soil shall be added to bring it to correct level, and the soil shall be thoroughly tamped. Walls of plant pits shall be dug so that they are sloped as shown on the Drawings, and scarified. Do not excavate compacted subgrades of adjacent pavement or structures.

B. Plants shall be set as indicated on Drawings. Plants shall be set so that the root flare is at, or slightly above, finished grade. Plants located in poorly drained soils shall be set 2 to 4 inches (101.6 mm) above finished grade, gradually sloping between the top of the root ball and the surrounding finished grade.

C. Plants shall be turned to the desired orientation when required by Architect.
   1. Containerized plants shall be removed from container taking care not to damage roots. The side of the root ball shall be scarified to prevent root-bound condition before positioning in planting pit.
   2. Plants shall be positioned in center of planting pits, set plumb, and rigidly braced in position until all planting soil has been tamped solidly around the balls.
   3. Pits shall be backfilled with planting soil. Soil shall be worked carefully into voids and pockets, tamping lightly every 6 inch (152.4 mm).
      a. When pit is two-thirds full, plants shall be watered thoroughly, and water left to soak in before proceeding.
      b. At this time, ropes or strings on top of balls shall be cut and shall be pulled back. Burlap or cloth wrapping shall be left intact around ball except that portions of wrap that are exposed at top of ball shall be turned under and buried. Non-biodegradable ball wrapping and support wire shall be totally removed from ball and planting pit.
      c. Wire baskets shall be completely cut away from sides of root ball, and removed from pit. Bottom of basket may remain.
      d. Remove nursery plant identification tags.
   4. Backfilling and tamping shall then be finished and a saucer formed around plant pits as indicated on the Drawings.
   5. Saucer shall be filled with water and water left to soak in. Saucer shall then be filled with water again.

PERENNIALS

A. Set out and space plants 12 inches (304.8 mm) apart .

B. Perennials:
   1. Dig at least 18" deep, but 12" is adequate. Work 4-6" humus into the top layers of soil by digging or tilling.
   2. Check root ball after removing plant from its container. Encircling roots need to be gently loosened from the tight mat of root-bound plants. If roots are very dense at bottom of pot, slice off the bottom 1". If roots are seriously disturbed when planting, cut back some foliage to reduce the water stress that will occur.
   3. Plant at the same soil level as the plant was in its container.

C. Work soil around roots to eliminate air pockets and leave a slight saucer indentation around plants to hold water.

D. Water thoroughly after planting, taking care not to cover plant crowns with wet soil.

E. Protect plants from hot sun and wind; remove protection if plants show evidence of recovery from transplanting shock.

ROOT BARRIER

A. Root barrier shall be installed as indicated on the Drawings and in accordance with manufacturer's recommendations.

FERTILIZER APPLICATION

A. Organic Fertilizer: Planting beds shall be fertilized two times per year (March and October) with Organic Fertilizer at a minimum rate of 20 lb. per 1000 sq. ft. Rate of application shall be varied depending on fertilizer type used, weather conditions, and overall soil conditions to produce a consistent growth and color to the plantings. After application of fertilizer, planting beds shall be thoroughly watered.

B. Organic Foliar Spray: Planting beds shall be fertilized two times per year (May and July) with Organic Foliar Spray at a minimum rate of 2 gallons per 1000 sq. ft.

PRE-EMERGENT-HERBICIDE

A. Apply pesticides and other chemical products and biological control agents in accordance with authorities having jurisdiction and manufacturer's written recommendations. Coordinate applications with Owner's operations and others in proximity to the Work. Notify Owner before each application is performed.

B. Immediately after planting, pre-emergent herbicide shall be applied to ornamental shrub beds and and around base of trees, in strict accordance with chemical manufacturer's printed instructions.

POST EMERGENT-HERBICIDE

A. Apply pesticides and other chemical products and biological control agents in accordance with authorities having jurisdiction and manufacturer's written recommendations. Coordinate applications with Owner's operations and others in proximity to the Work. Notify Owner before each application is performed.

B. Upon the appearance of weeds within planted areas, pre-emergent herbicide shall be applied to ornamental shrub beds and around base of trees, in strict accordance with chemical manufacturer's printed instructions.

STAKING AND GUYING

A. Each tree shall be staked or guyed immediately following planting. All evergreen trees and deciduous trees over 4" caliper shall be guyed. Plants shall stand vertical and plumb after staking or guying. Set vertical stakes and space to avoid penetrating root balls or root masses. Allow enough slack to avoid rigid restraint of tree. Stakes and guys shall be installed as indicated on the Drawings.

MULCHING

A. Install weed-control barriers before mulching according to manufacturer's written instructions. Completely cover area to be mulched, overlapping edges a minimum of 6 inches (152.4 mm).

B. Mulch shall be applied as follows and will not cover the base of tree trunks (entire area listed shall be mulched):
   1. Mulch Area Mulch Depth, in.
   2. 3
   3. 3
   4. 2

PRUNING

A. Each tree and shrub shall be pruned to preserve the natural character of the plant. Pruning shall be done after delivery of plants and after plants have been inspected and approved by the Architect. Pruning procedures shall be reviewed with Architect before proceeding.

B. Pruning shall be done with clean, sharp tools. Cuts shall be made flush, leaving no stubs. No tree paint shall be used.

C. Dead wood, suckers, and broken, weak, interfering and badly bruised branches shall be removed.

MAINTENANCE OF PLANTING

A. Maintenance shall begin immediately after each plant is planted and shall continue until Final Acceptance.

B. Maintenance shall consist of pruning, watering, cultivating, weeding, mulching, fertilizing, removal of dead material, repairing and replacing of tree stakes, tightening and repairing of guys, adjusting and replacing of damaged tree wrap material, resetting plants to proper grades and upright position, and furnishing and applying such sprays as are necessary to keep plantings free of insects and disease, and in a healthy growing condition. Use integrated past management practices whenever possible to minimize the use of pesticides and reduce hazards. Treatments include physical controls such as hosing off foliage, mechanical controls such as traps, and biological control agents.

C. Fill in as necessary soil subsidence that may occur because of settling or other processes. Replace mulch materials damaged or lost in areas of subsidence.

D. Daily watering of 1 gal./caliper inch should be delivered to the root ball of each tree during the first summer after planting. Continue through fall, reducing frequency. For trees larger than 3 inch (76.2 mm) caliper, fill saucer with 6 – 8 gallons twice per week during hot, dry weather, and once per week during cooler, wetter periods.

E. Planting areas shall be kept free of weeds, grass, and other undesired vegetative growth.

F. Maintenance pruning of pollarded trees shall occur annually during the dormant season to remove branches 1 inch (25.4 mm). and larger in diameter and thin out sucker growth. Branches to be pruned shall be cut flush to the branch ends established in the initial pollarding. Maintenance pruning shall be done by a qualified arborist and techniques shall conform to NAA standards referenced above. Pollarding shall be reviewed with the Architect before commencing work. Additional light pruning to shape and thin crowns shall be done during the growth season as directed by the Architect.

CLEANUP AND PROTECTION

A. During planting, keep adjacent paving and construction clean and work area in an orderly condition.

B. Protect plants from damage due to landscape operations and operations of other contractors and trades. Maintain protection during installation and maintenance periods. Treat, repair, or replace damaged plantings.

C. After installation and before Substantial Completion Insert time, remove nursery tags, nursery stakes, tie tape, labels, wire, burlap, and other debris from plant material, planting areas, and Project site.

DISPOSAL

A. Remove surplus soil and waste material including excess subsoil, unsuitable soil, trash, and debris and legally dispose of them off Owner's property.

END OF SECTION 329300

SECTION 31 11 00
SITE CLEARING

PART 1 GENERAL

1.1 SECTION INCLUDES

A. Removal of trees, stumps, roots, and tree debris.

B. Clearing site of plant life, root systems and shrubs.

C. Removal of fences, fence posts, mail box posts, and miscellany.

1.2 REFERENCES

A. **NAA Standards**:

Pruning Standards for Shade Trees.

B. **Utah Shade Tree Pruning Standards**.

1.3 QUALITY ASSURANCE

A. Provide at least one person, who is familiar with NAA pruning standards for the type of tree involved, to be present during tree pruning operations.

1.4 SITE CONDITIONS

A. Repair or replace damaged trees and shrubs at no additional cost to OWNER.

1.5 PROTECTION

A. Protect roots and branches of trees to remain.

B. Construct temporary barricading at tree's approximated drip line. Place continuous barricades at least three (3) feet high.

C. When setting posts, avoid damaging tree roots.

D. Do not permit heavy equipment or stockpiling of materials or debris within the barricaded area, or permit earth surface to be changed.

E. Provide water and fertilizer to maintain existing trees.

PART 2 PRODUCTS

2.1 STUMP TREATMENT SOLUTION

A. Formulated to kill existing vegetation.

PART 3 EXECUTION

3.1 EXAMINATION

A. The drawings do not purport to show all trees and shrubs existing on site.

B. Verify with ENGINEER which plantings are to be removed or to remain.

C. Tree root inspection:

1. Assist ENGINEER by removing and replacing existing surface improvements.
2. Cost of removals and replacements will be paid for using existing payment prices, or if none, then by using contract Modification prices.

3.2 PREPARATION

A. Locate utilities. Preserve utilities that are to remain in service, Section 31 23 16.

B. Review work procedures with ENGINEER.

C. Schedule work carefully with consideration for property owners and general public.

D. Before starting, arrange for disconnection of all utility services that are to be removed or which interfere with work.

3.3 SITE CLEARING

A. Remove all vegetation outside of excavation, fill slope lines, and limits of slope rounding.

B. Remove fences, posts, appurtenances, and miscellaneous objects.

3.4 TREE REMOVAL

A. Remove branches, limbs, and debris.

B. Remove stumps and roots to 18 inches below proposed grade.

C. For stumps larger than six (6) inches caliper remove and treat as follows:

1. Remove chips and debris from around remaining stump.
2. Apply stump treatment solution in accordance with manufacturer's recommendations.
3. Do not allow chemical solution to mist, drip, drift, or splash onto adjacent ground surfaces or desirable vegetation.
4. Replace any existing vegetation damaged or killed through improper use of chemical at no additional cost to OWNER.

END OF SECTION

SECTION 31 23 16
EXCAVATION

PART 1 GENERAL

1.1 SECTION INCLUDES

A. Excavation and disposal of excavated materials.

B. Protection of existing facilities such as utilities, vegetation, structures affected by excavation, etc.

1.2 PAYMENT PROCEDURES

A. No Contract Time extension shall be granted and no additional compensation shall be made if buried utilities or structures that conflict with the Work have not been found by Keyholing.

B. Perform Incidental Excavation at no additional cost to OWNER.

1.3 DEFINITIONS

A. **Authorized Over Excavation**: Upper limit of excavation is proposed excavation limit. Lower and lateral limits are as authorized by ENGINEER.

B. **Classified Excavation**: The excavation of specified materials.

C. **Incidental Excavation**: Excavation done for CONTRACTOR's benefit, excavation error, dewatering of excavation, slough, or over-break.

D. **Unclassified Excavation**: The excavation of all materials encountered regardless of the nature, size, or manner in which they are removed. Presence of isolated boulders or rock fragments will not be sufficient cause to change classification of surrounding materials.

E. **Keyholing**: The process of making a small, precisely controlled hole for "day-lighting", or uncovering and exposing underground utilities, in order to locate or inspect them.

1.4 STORAGE AND HANDLING

A. Stockpile excavated material to cause minimum inconvenience to public and provide for emergency services as necessary.

B. Provide free access to existing fire hydrants, water valves, gas valves, and meters.

C.P rovide free flow of storm water in all gutters, conduits, and natural water courses.

D. Utilize traffic control signs, markers, and procedures in product storage and handling activities.

E. Promptly remove other material from site.

PART 2 PRODUCTS

2.1 BACKFILL MATERIALS

A. Common fill, Section 31 05 13.

B. Aggregate base course, Section 32 11 23.

C. Stabilization fill, aggregate base course or common fill with maximum rectilinear particle size of two (2) inches.

D. Stabilization fabric, Section 31 05 19.

PART 3 EXECUTION

3.1 PREPARATION

A. Photograph existing surfaces where work will take place to document conditions before excavation, Section 01 78 39.

B. Use white paint and mark the proposed excavation.

C. Call the one-call center and wait the required amount of time. Colors of one call center marks indicate the following:

White	Proposed excavation
Red	Electric power lines, cables, conduit and lighting cables
Yellow	Gas, oil, steam, petroleum or gaseous materials.
Orange	Communications, alarm, signal, cables or conduits.
Blue	Potable water.
Purple	Reclaimed water, irrigation and slurry lines.
Green	Sewer and storm drain lines.
Pink	Temporary survey markings.

D. Implement traffic control plan requirements, Section 01 55 26.

E. For temporary controls, refer to Section 01 57 00.

3.2 PROTECTION

A. Identify required lines, grades, contours, and benchmarks, Section 01 71 23.

B. Utilities:

1. Keyhole, expose or otherwise locate utilities as necessary to give utility agency at least one (1) day notice to protect, preserve, or relocate a utility that may interfere with or may be damaged by excavation work. Perserve utilities that remain in service.

2. Where utilities or structures conflict with design grades, report conflict to appropriate utility company and ENGINEER 14 days before initiating work within the conflict area.

C. Support and protect from damage any existing facility and structure that

exists in, passes through, or passes under the site.

D. Protect existing landscape sprinkler systems. When sprinkler system disturbance is required, interrupt and repair system so operation of system is maintained, Section 02 41 13.

E. Carefully remove soil around tree roots so ENGINEER can assess stability and health of tree.

3.3 GENERAL EXCAVATION REQUIREMENTS

A. Excavate topsoil from areas to be relandscaped or regraded and other marked areas.

B. Excavate site to line and grade indicated. Legally dispose of excavated material.

C. Carefully excavate soils in vicinity of buried utility marks placed by the one-call center.

D. Where soil has been softened or eroded by flooding or hardened by drying, rework all damaged areas or replace with approved material at no additional cost to OWNER.

E. Notify ENGINEER of unexpected subsurface conditions.

F. Underpin adjacent structure, service utilities and pipe chases that may be damaged by excavation work.

G. Protect excavation walls as required. If conditions permit, slope excavation sides to maintain a safe and clean working area. Remove loose materials.

H. Where ENGINEER deems subgrade material to be susceptible to frost heave or otherwise unsatisfactory, excavate additional depth.

3.4 TOPSOIL

A. Excavate topsoil only to depth that will preserve topsoil quality.

B. Do not mix topsoil with subsoil during stockpiling or spreading.

3.5 SHORING

A. Slope, shore, sheet, brace or otherwise support excavations over four (4) feet deep, Section 31 41 00.

B. When soil conditions are unstable, excavations shallower than four (4) feet deep must also be sloped, supported or shored.

3.6 DEWATERING

A. Keep excavation free from surface and ground water.

B. If ground water is in the intended construction operations, dewater excavations.

C. If there are no olfactory or visual indications of contamination in the water, discharge according to requirements of Federal, State or local agency having jurisdiction.

D. If any evidence of contamination in the water, based on olfactory or visual indications, cease excavation work until potential risks are evaluated. During evaluation, handle water as a contaminated material.

E. Pay for damages and costs resulting from dewatering operations.

3.7 ROADWAY EXCAVATION

A. In advance of setting line and grade stakes, clear and grub area of brush, weeds, vegetation, grass, and debris. Drain all depressions or ruts.

B. Roadway excavation is Unclassified Excavation. It includes Portland cement concrete or bituminous concrete pavement removal and removal of any aggregate base or sub-base material to line and grade established by Drawings or ENGINEER.

3.8 STRUCTURAL AND LANDSCAPE EXCAVATION

A. Provide shoring, cribs, cofferdams, caissons, pumping, bailing, draining, sheathing, bracing, and related items.

B. For piling work, coordinate special requirements for piling. Protect excavation walls.

C. If conditions permit, slope excavation sides as excavation progress. Maintain a safe and clean working area.

D. Support excavations. Do not interfere with the bearing of adjacent foundations, pipelines, etc.

3.9 TRENCH EXCAVATION

A. Grade bottom of trenches to provide uniform bearing surface.

B. If necessary, make bell holes and depressions required for laying and joining pipe or box.

C. Limit width of trench excavations to the dimensions suitable for worker access per pipe manufacturer's recommendation. Provide enough space for compaction equipment. Notify ENGINEER if excavation operations exceed any indicated line and grade limits.

D. In roadways and regardless of trench depth, limit length of open trenches to 200 lineal feet day or night. Provide barricading, Section 01 55 26. Protect trenches over night.

3.10 STABILIZATION EXCAVATION

A. Perform stabilization excavation as Incidental Excavation.

3.11 AUTHORIZED OVER EXCAVATION

A. Over excavation must be permited by ENGINEER to be classified as authorized over excavation. Volume will be determined by the method of average-end-areas in the original position.

3.12 TOLERANCE

A. Grading: Top surface of Subgrade = plus or minus 1 inch.

END OF SECTION

SECTION 31 23 17
ROCK REMOVAL

PART 1 GENERAL

1.1 SECTION INCLUDES

A. Requirements for Rock removal and use of explosives to assist in Rock removal.

1.2 REFERENCES

A. **NFPA Standards**:

495 Manufacture, Transportation, Storage, and Use of Explosive Materials.

1.3 DEFINITIONS

A. **Rock**: Solid mineral material that cannot be removed with equipment reasonably expected to be used in the Work without cutting, drilling or blasting.

1.4 SUBMITTALS

A. Submit proposed method of blasting, delay pattern, explosive types, type of blasting mat cover, and intended Rock recovery method.

B. Submit photographs of existing site conditions and facilities in vicinity of Work before blasting. Refer to construction photographic requirements, Section 01 78 39.

1.5 QUALITY ASSURANCE

A. Seismic Survey Firm: Company specializing in seismic surveys with two (2) years documented experience.

B. Explosive Firm: Company specializing in explosives for disintegration of Rock with 2 years documented experience.

PART 2 PRODUCTS

2.1 EXPLOSIVES

A. Type recommended by explosives firm following seismic survey and required by authorities having jurisdiction.

2.2 DELAY DEVICES

A. Type recommended by explosives firm.

2.3 BLASTING MAT MATERIALS

A. Type recommended by explosives firm.

PART 3 EXECUTION

3.1 PREPARATION

A. Verify site conditions and note irregularities affecting work of this Section.

B. Obtain permits from authorities having jurisdiction before explosives are brought to site or drilling is started.

C. Locate and preserve utilities, Section 31 23 16.

D. Beginning work of this Section constitutes acceptance of existing conditions.

E. Comply with NFPA 495.

3.2 STORAGE OF BLASTING MATERIALS

A. Securely store all explosives in compliance with Laws and Regulations.

B. Mark all storage places clearly.

C. Where no local Laws or Regulations apply, provide storage not closer than 1,000 feet from any road, building, camping area or place of human occupancy.

3.3 ROCK REMOVAL - NONEXPLOSIVE METHOD

A. Cut away Rock at excavation bottom to form level bearing.

B. Remove shaled layers to provide sound and unshattered base for foundations.

C. Remove and legally dispose of excess excavated material and debris off-site unless indicated otherwise.

D. Correct unauthorized Rock removal at no additional cost to OWNER.

3.4 ROCK REMOVAL - EXPLOSIVE METHOD

A. Provide a qualified explosives expert to act as an advisor and consultant during drilling and blasting operations.

B. Advise owners of adjacent buildings or structures and utility companies in writing before setting up seismographs. Describe blasting and seismic operations.

C. Obtain and pay for a seismic survey before Rock excavation to determine maximum charges that can be used at different locations in area of excavation without damaging adjacent properties and utilities.

D. Provide seismograph monitoring during progress of blasting operations.

E. Disintegrate and remove Rock from excavation operations.

END OF SECTION

SECTION 31 23 23
BACKFILLING FOR STRUCTURES

PART 1 GENERAL

1.1 SECTION INCLUDES

A. Structural backfill materials.

B. Structural backfilling requirements.

1.2 REFERENCES

A. **ASTM Standards**:

D698 Laboratory Compaction Characteristics of Soil Using Standard Effort (12,400 ft-lbf/ft^3 (600 kN-m/m^3)).

D1557 Standard Test Methods for Laboratory Compaction Characteristics of Soil using Modified Effort (56,000 ft-lbf/ft^3 (2,700 kN-m/m^3)).

D2922 Density of Soil and Soil-Aggregate in Place by Nuclear Methods (Shallow Depth).

D4832 Preparation and Testing of Soil-Cement Slurry Test Cylinders.

1.3 SUBMITTALS

A. Submit maximum laboratory dry density and optimum laboratory moisture content for:

1. Subgrade material, and
2. Each type of fill to be used.

1.4 QUALITY ASSURANCE

A. Do not change material sources, or aggregate without ENGINEER's knowledge.

B. Reject backfill material that does not comply with requirements specified in this Section.

C. If requested, submit a written quality control inspections and testing report describing source and field quality control activities performed by CONTRACTOR and Suppliers.

1.5 STORAGE

A. Safely stockpile backfill materials.

B. Separate differing materials, prevent mixing, and maintain optimum moisture content of backfill materials.

1.6 SITE CONDITIONS

A. Do not place, spread, or roll any backfill material over material that is damaged by water. Remove and replace damaged material at no additional cost to OWNER.

B. Control erosion. Keep area free of trash and debris. Repair settled, eroded, and rutted areas.

C. Reshape and compact damaged structural section to required density.

1.7 ACCEPTANCE

A. **General**: Native material may be wasted if there is no additional cost to substitute material acceptable to ENGINEER.

B. **Material**: For material acceptance refer to:

1. Common fill, Section 31 05 13.
2. Aggregate base course, Section 32 11 23.
3. Cement treated fill, Section 31 05 15.

C. **Lift thickness**: One test per Lot.

D. **Compaction**: One test per Lot. Verify compaction using nuclear tests, ASTM D2922. Density and lot sizes as follows:

Table 1 – Density and Lot Sizes

Structure Type	Density	Proctor	Lot Size
Strip Footings	95	Standard	Subgrade: 200 linear feet
	98	Modified	Aggregate base course: 200 linear feet per lift.
Structure Footing excluding strip footings	95	Standard	Subgrade: 225 square feet.
	98	Modified	Aggregate base course: Each 225 square feet per lift
Embankments	95	Standard	Fill: 625 square feet per lift
Interior Slab on Grade	98	Modified	Aggregate base course: 625 square feet
Side of Foundation Walls and Retaining Walls	95	Standard	Exterior:
	98	Modified	Interior
Miscellaneous small structures (e.g. Manholes, drainage boxes, etc.)	95	Standard	Subgrade: Each footprint area Fill: Each lift
	98	Modified	Aggregate base course: Each lift

NOTES
(a) Standard proctor, ASTM D698.
(b) Modified proctor, ASTM D1557.

E. **Flowable Fill Strength**: Lot size is one day production with sub-lots of 250 cubic yards or part thereof. Verify strength using cylinders, ASTM D4832.

F. **Grade, Cross Slope**: Measured at random locations.

1.8 **WARRANTY**

A. Repair settlement damage at no additional cost to OWNER.

PART 2 PRODUCTS

2.1 **BACKFILL MATERIALS**

A. Common fill, Section 31 05 13. Granular material, CONTRACTOR's choice.

B. Aggregate base course, Section 32 11 23. Untreated base course.

C. Cement treated fill, Section 31 05 15. Use a flowable fill so vibration is not required.

2.2 **WATER**

A. Make arrangements for sources of water during construction and make arrangements for delivery of water to site.

B. Comply with local Laws and Regulations at no additional cost to OWNER when securing water from water utility company.

PART 3 EXECUTION

3.1 **PREPARATION**

A. Implement traffic control plan requirements, Section 01 55 26.

B. Verify:

1. Backfill material meets gradation requirements.
2. Foundation walls are braced to support surcharge forces imposed by backfilling operations, areas to be backfilled are free of debris, snow, ice or water.
3. Ground surface is not frozen.

C If ground water is in the intended backfill zone, dewater.

3.2 **PROTECTION**

A. Protect existing trees, shrubs, lawns, structures, fences, roads, sidewalks, pavings, curb and gutter and other features.

B. Protect above or below grade utilities. Contact utility companies to repair utility damage. Pay all cost of repairs.

C. Avoid displacement of and damage to existing installations while compacting or operating equipment. Do not fill adjacent to structures until excavation is checked by ENGINEER.

D. Do not use compaction equipment adjacent to walls or retaining walls that may cause wall to become over-stressed or moved from alignment.

E. Do not disturb or damage foundation perimeter drainage, foundation, damp-proofing, foundation waterproofing and protective cover, or utilities in trenches. Movement of construction machinery over work at any stage of construction is solely at CONTRACTOR's risk.

F. Restore any damaged structure to its original strength and condition.

3.3 LAYOUT

A. Identify required line, levels, contours, and datum.

B. Stake and flag locations of underground utilities.

C. Upon discovery of unknown utility or concealed conditions, notify ENGINEER.

D. Maintain all benchmarks, control monuments and stakes, whether newly established by surveyor or previously existing. Protect from damage and dislocation.

E. If discrepancy is found between Contract Documents and site, ENGINEER shall make such minor adjustments in the Work as necessary to accomplish the intent of Contract Documents without increasing the Cost of the Work to CONTRACTOR or OWNER.

3.4 SUBGRADE

A. Protect Subgrade from desiccation, flooding, and freezing.

B. Before backfilling over Subgrade, get ENGINEER's inspection of subgrade surface preparations.

C. If Subgrade is not readily compactable get ENGINEER’s permission to stabilize the subgrade.

3.5 FOUNDATIONS AND SLABS ON GRADE

A. Lift thickness before compaction is eight (8) inches.

B. Do not backfill against walls until concrete has obtained 14 days strength. Backfill against foundation walls simultaneously on each side.

C. Fill unauthorized excavations with material acceptable to ENGINEER at no additional cost to OWNER.

D. Do not damage adjacent structures or service lines.

E. Where flowable fill is used, use fill that flows easily and vibration for compaction is not required.

3.6 MODIFIED BACKFILL LAYER METHOD

A. Section 33 05 20.

3.7 TOLERANCES

A. Compaction: Ninety-five (95) percent or ninety eight (98) percent minimum relative to a standard or modified proctor density, Section 31 23 26.

B. Lift Thickness (before compaction):

1. Eight (8) inches when using riding compaction equipment.
2. Six (6) inches when using hand held compaction equipment.
3. As proven in the modified backfill layer method, Section 33 05 20.

C. Cement Treated Fill: Compressive strength targets are 60 psi in 28 days and 90 psi maximum in 28 days.

3.8 CLEANING

A. Remove stockpiles from site. Grade site surface to prevent free standing surface water.

B. Leave borrow areas clean and neat.

END OF SECTION

SECTION 31 23 26
COMPACTION

PART 1 GENERAL

1.1 SECTION INCLUDES

A. Compaction of granular fill materials.

1.2 REFERENCES

A. **ASTM Standards**:

D698	Laboratory Compaction Characteristics of Soil Using Standard Effort (12,400 ft-lbf/ft^3 (600 kN-m/m^3)).
D1557	Standard Test Methods for Laboratory Compaction Characteristics of Soil Using Modified Effort (56,000 ft-lbf/ft^3 (2,700 kN-m/m^3))
D2216	Laboratory Determination of Water (Moisture) Content of Soil and Rock.
D2922	Density of Soil and Soil-Aggregate in Place by Nuclear Methods (Shallow Depth).
D3017	Water Content of Soil and Rock in Place by Nuclear Methods (Shallow Depth).
D3282	Classification of Soils and Soil-Aggregate Mixtures for Highway Construction Purposes.
D3740	Minimum Requirements for Agencies Engaged in the Testing and/or Inspection of Soil and Rock as Used in Engineering Design and Construction.

1.3 DEFINITIONS

A. **A-1 Soil**: Defined in ASTM D3282.

B. **Modified Proctor Density**: The maximum laboratory density, as defined in and determined by ASTM D1557 using procedure A, B or C as applicable.

C. **Relative Density (or Relative Compaction):** The ratio of field dry density to the maximum laboratory density expressed as a percentage.

D. **Standard Proctor Density**: The maximum laboratory density, as defined in and determined by ASTM D698 using procedure A, B or C as applicable.

1.4 QUALITY ASSURANCE

A. Use a soil and rock laboratory that complies with ASTM D3740.

PART 2 PRODUCTS Not Used

PART 3 EXECUTION

3.1 COMPACTION

A. Moisten or dewater backfill material to obtain optimum moisture for compaction.

B. When no density compactive effort is specified, compact the entire area to 95 percent and eliminate unstable zones.

C. Correct deficient compaction conditions. Replace or repair materials and damaged facilities.

3.2 FIELD QUALITY CONTROL

A. **Testing**: Perform control testing of materials. Perform additional testing at no additional cost to OWNER, for

1. Changes in source of materials or proportions requested by CONTRACTOR, or
2. Failure of materials to meet specification requirements, or
3. Other testing services needed or required by CONTRACTOR.

B. **Optimum Soil Density**: Use ASTM D2216 and the following industry standards.

1. For A-1 Soils: Method C of ASTM D1557 (Modified Proctor)
2. For All Other Soils: Method C of ASTM D698 (Standard Proctor).

C. **Field Density**:

1. Use ASTM D3017 and test method C of ASTM D2922 for shallow depth nuclear testing.
2. No density determinations are required on any material containing more than 65 percent material retained on the number 10 sieve or more than 60 percent material retained on the number 4 sieve. In lieu of reporting densities in such cases, report the sieve analysis to document the material type.

3.3 REPORT

A. For each material tested, document the following:

1. Vertical and horizontal location of the test.
2. Optimum laboratory moisture content.
3. Field moisture content.
4. Maximum laboratory dry density.
5. Field density.
6. Percent compaction results.
7. Certification of test results by Independent Testing Agency.

END OF SECTION

SECTION 31 25 00

EROSION AND SEDIMENTATION CONTROL

PART 1 GENERAL

1.1 SECTION INCLUDES

A. Erosion control and slope protection facilities including blankets or mulches.

B. Construction of drainage facilities to protect work area.

1.2 SUBMITTALS

A. Submit before using:

1. Sample of blanket or geotextile materials.
2. Mulch formula.
3. Grass mixture listing.
4. Plant list.
5. Geotextile manufacturer's certification.

B. Application rate of fiber mulches recommended by tackifier manufacturer.

1.3 DELIVERY, STORAGE AND HANDLING

A. Deliver seed in original containers with certified germination test results showing analysis of seed mixture, percentage of pure seed, year of production, and date of packaging. Damaged packages are not acceptable. Store seed free of moisture.

B. Deliver fertilizer in waterproof bags showing weight, chemical composition and name of manufacturer.

C. Deliver blanket in original wrapping showing name of manufacturer and product weight.

D. Deliver plant materials immediately before placement.

E. Replace plant when original root protection system (burlap bag wrap of earth ball, plastic container with special plant bedder, etc.) has been broken or displaced before planting.

PART 2 PRODUCTS

2.1 MATERIALS

A. Riprap: Rock, Section 31 37 00.

B. Blankets: Uniform open weave jute, wood fiber, biodegradable or photodegradable synthetic fiber matting.

C. Geotextiles: Section 31 05 19.

D. Erosion Control Vegetation Mats: Permanent three dimensional mats that allow for revegetation where high water flows are expected.

E. Fiber Mulches: Straw, hay, wood or paper free from weeds and foreign matter detrimental to plant life.

F. Mulch Binder: Vegetable based gel tackifier with growth stimulant.

G. Topsoil and Fertilizer: Section 31 05 13 and Section 32 92 00.

PART 3 EXECUTION

3.1 PREPARATION

A. Remove foreign materials, roots, rocks, debris.

B. Grade to eliminate rough spots, ponding areas.

C. Grade soil to drain perimeter water away from protected areas.

D. Temporary controls, Section 01 57 00 as applicable.

3.2 SLOPE PROTECTION BLANKET

A. Cover seeded slopes where grade is greater than one (1) vertical to three (3) horizontal with blanket. Roll down over slopes carefully and loosely without stretching or pulling.

B. Lay blanket smoothly on prepared soil surface. Bury top end of each section in a narrow trench. Leave 24 inches overlap from top roll over bottom roll. Leave 12 inches overlap over adjacent section.

C. Toe-wrap fabric at bottom of slope.

D. Staple loosely the outside edges and overlaps.

E. In ditches, lay matting in upstream direction. Overlap and staple ends six (6) inches with upstream section on top.

F. If natural drainage water traverses protected or controlled area; construct a channel or riprap Section 31 37 00.

G. Lightly dress slopes with topsoil to ensure close contact between cover and soil.

H. Present alternative methods of protection for approval before starting any work.

3.3 GEOTEXTILE

A. Placement, Section 31 05 19.

3.4 MULCHES

A. Apply mulches at the rate necessary.

B. When installed with a tackifier, apply at the rate recommended by the tackifier supplier.

3.5 SURFACE COVER

A. Grass, Section 32 92 00.

B. Ground cover, Section 32 93 13.

3.6 **MAINTENANCE**

A. Maintain surfaces and supply additional topsoil where necessary, including areas affected by erosion.

B. Protect and repair geotextiles, Section 31 05 19.

C. Keep surface of soil damp only as necessary for seed germination.

D. Apply water slowly so surface of soil will not puddle and crust.

E. Replant damaged grass areas showing root growth failure, deterioration, bare or thin spots, and eroded areas.

F. Re-fertilize 60 days after planting.

G. Remove weeds that are over three (3) inches high.

END OF SECTION

SECTION 32 12 16.13
PLANT-MIX BITUMINOUS PAVING

PART 1 GENERAL

1.1 SECTION INCLUDES

A. Place a bituminous concrete pavement base course, leveling course, surface course, overlay course, or an inlay course.

1.2 REFERENCES

A. **AASHTO Standards**:

R9	Acceptance Sampling Plans for Highway Construction.
TP68	Bulk Specific Gravity and Density of Compacted Asphalt Mixtures Using Automatic Vacuum Sealing Method.
T324	Hamburg Wheel-Track Testing of Compacted Hot-Mix Asphalt (HMA).

B. **ASTM Standards**:

D979	Sampling Bituminous Paving Mixtures.
D1188	Bulk Specific Gravity and Density of Compacted Bituminous Mixtures Using Coated Samples.
D2041	Theoretical Maximum Specific Gravity of Bituminous Paving Mixtures.
D2725	Bulk Specific Gravity and Density of Non-Absorptive Compacted Bituminous Mixtures.
D2950	Density of Bituminous Concrete In Place by Nuclear Method.
D3549	Thickness or Height of Compacted Bituminous Paving Mixture Specimens.
D3665	Random Sampling of Construction Materials.
D5361	Sampling Compacted Bituminous Mixtures for Laboratory Testing.
D6927	Marshall Stability and flow of Bituminous Mixtures.

1.3 DEFINITIONS

A. Must Grind: Defined in Section 32 01 31.

B. Road Class: Defined in Section 32 01 31

1.4 SUBMITTALS

A. **Before Delivery**: Submit 48 hours before delivery:

1. Location and name of bituminous concrete production facility.
2. Mix design method.
3. Mix identification number or code.

4. Type, grade, and weight of binder.
5. Type, grade, and weight of aggregate.
6. Traffic control plan, Section 01 55 26.
7. Type and number of rollers.
8. Manufacturer's certificate of compliance for paving geotextiles. (Refer to Section 31 05 19).
9. Certification of profilograph and profilograph operator.
10. Cold weather paving plan.

B. **At Delivery**: For each batch delivered to site identify:
1. Date and project description.
2. Producer and plant.
3. Name of contractor.
4. Serial number of ticket.
5. Mix identification number or code.
6. Truck number and time dispatched.
7. Volume of mix delivered.

C. **After Placement**: Before final payment submit summary report describing profile deviation and profile roughness. See Section 32 01 31.

1.5 .**QUALITY ASSURANCE**

A. Do not change aggregate source or binder grade until ENGINEER accepts new source and new mix design.

B. Reject product and work that does not meet requirements of this Section.

C. Remove product found defective after installation and install acceptable product at no additional cost to OWNER.

D. Foreman of paving crew has completed at least three (3) projects of similar size and nature.

E. If requested, submit a quality control and testing report describing source and field quality assurance activities performed by CONTRACTOR and Suppliers.

F. For all equipment and hand tools used to mix, haul, and place the bituminous concrete, use a release agent that does not dissolve asphalt and is acceptable to ENGINEER.

1.6 **WEATHER**

A. Temperature:
1. April 15 to October 15: Place pavement when air temperature in the shade and the roadway surface temperature are above 50 deg F. The ENGINEER determines may provide written approval if it is acceptable to place outside of this temperature limit.
2. Before April 15 and After October 15: Provide a Cold Weather Paving Plan. ENGINEER must accept the plan before proceding.

Include the following details.

a. Haul details.

b. Placement details.

c. Compaction aids used in production.

d. Coordination procedure for acceptance testing.

B. Moisture: Do not place on frozen base, during adverse climatic conditions such as precipitation, or when roadway surface is wet or icy.

1.7 **NOTICE**

A. Follow Laws and Regulations concerning when and to whom notices are to be given. Send written notice at least three (3) days before start of paving.

B. Indicate paving time and when new surface can be used.

C. Warn of potential vehicle tow away and other construction issues affecting neighborhood.

D. Should work not occur on specified day, send a new notice.

1.8 **ACCEPTANCE**

A. **General**:

1. Acceptance is by Lot.

2. If non-complying material has been installed and no price for the material is specified, apply pay adjustment against cost of work requiring complying material as part of its installation, Section 01 29 00.

3. Dispute resolution, Section 01 35 10.

4. Opening a paved surface to traffic does not constitute acceptance.

5. Observation of CONTRACTOR's field quality control testing does not constitute acceptance. Such testing; however, may be used by ENGINEER for acceptance if requirements of Section 01 35 10 are met.

B. **Mix Material**: Accepted as specified for bituminous concrete , Section 32 12 05, or rubberized asphalt concrete, Section 32 12 08.

C. **Mix Temperature at Site:**

1. Reject mixes in the transport material exceeding the following temperatures.

a. Hot mix, 425 deg F.

b. Warm mix, 300 deg F.

c. Oil sand bituminous concrete, 230 deg F.

2. Dispose of cold mix in paver hopper as thin spread underlay.

D. **Grade, Cross Slope**: Verify tolerances are not exceeded.

E. **Compaction**: Options for acceptance are 1) core density, 2) non-destructive test density, or 3) control strip density with visual observation. Use core density unless specified elsewhere. A Lot is acceptable if density tests are within pay factor 1.00 limits. At ENGINEER's discretion, a Lot with deficient sub-lot density tests may be accepted if pay is adjusted using an applicable pay factor in the following table, or accepted at 50 percent pay if a sub-lot is in Reject.

Table 1 – Compaction Pay Factors		
Pay Factor	**Density, in Percent Relative to ASTM D2041**	
	Average	**Lowest Test**
0.70	More than 96	–
1.00	**92 to 96**	**89 or greater**
0.90	92 to 96	Less than 89
0.80	Less than 92	89 or greater
Reject	Less than 92	Less than 89

1. **Core Density**: This method compares the average density of cores extracted from a pavement surface to maximum theoretical density:
   a. Lot Size: One (1) day production with 1,000 square yard sub-lots or part thereof.
   b. Sampling Protocol: Use ASTM D3665 to randomly select in each sub-lot at least one (1) surface test location and one (1) longitudinal joint test location. Collect at least two (2) test samples at each test location, ASTM D5361. Samples are full depth or overlay depth in overlay construction.
   c. Testing Protocol: ASTM D2725 for core density and ASTM D2041 (Rice) for maximum theoretical density.
2. **Non-Destructive Density Testing by Gage**:
   a. Lot Size: One (1) day production with 1,000 square yard sub-lots or part thereof.
   b. Sampling Protocol: Use ASTM D3665 to randomly select in each sub-lot at least one (1) surface test location and one (1) longitudinal joint test location.
   c. Testing Protocol: ASTM D2950 (nuclear gage) or AASHTO TP68 (non-nuclear gage) and ASTMD 2041 (Rice) for maximum theoretical density.
3. **Control Strip Density with Visual Observation**:
   a. Lot: One (1) day production.
   b. Sampling Protocol: Not required after rolling pattern is determined.
   c. Testing Protocol: ASTM D6927 (Marshall) and D2041 (Rice method) to determine rolling pattern for 94 percent compaction, thereafter visual examination.
4. **Compaction Dispute Resolution**:

a. CONTRACTOR:

1) Provide an Independent Testing Agency, Section 01 45 00.

2) Take two (2) supplement cores midway between deficient acceptance test locations, and midway between a deficient test location and an adjacent acceptable test location.

3) Patch core holes.

4) Conduct testing at no additional cost to OWNER.

b. ENGINEER:

1) Accept Lot at full pay if new information shows compliance, or

2) Accept Lot at pay reduction using new test information, or

3) Reject Lot.

F. **Thickness**: A Lot is acceptable if test deficiencies are within pay factor 1.00 limits. At ENGINEER's discretion, a Lot with sub-lot deficiencies greater than allowed for pay factor 1 in the following table may be accepted if pay is adjusted using one of the following applicable pay factors, or accepted at 50 percent pay if a sub-lot is in Reject.

Table 2 – Thickness Pay Factor

Pay Factors	Deficiency Limits, in Inches
1.00	0.00 to 0.375
0.90	0.376 to 0.50
0.70	0.51 to 0.75
Reject	0.76 to 1.00

1. **Lot Size**: One (1) day production with 1,000 square yard sub-lots or part thereof.

2. **Sampling Protocol**: Use ASTM D3665 to randomly select at least one surface test location and one longitudinal joint test location in each sub-lot. Collect at least two (2) core samples at each test location, ASTM D5361. Samples are full depth. Overlay construction measured only on overlay portion of core sample.

3. **Testing Protocol**: ASTM D3549:

a. Minimum Specified Thickness: A Lot specified to have minimum thickness will be accepted if all sub-lot measurements meet or exceed minimum. If thickness is deficient, additional material may be placed over the deficient thickness if there is no pavement feathering; placement matches this section's thickness tolerance; surface continues to drain; and roughness tolerance is met.

b. Actual Specified Thickness: A Lot specified to have actual thickness is acceptable if any sub-lot measurement does not exceed deficiency limits for thickness pay factor 1.00.

4. **Thickness Dispute Resolution**:
   a. CONTRACTOR:
      1) Hire an Independent Testing Agency, Section 01 45 00.
      2) Take two (2) additional cores midway between deficient acceptance test locations, and midway between a deficient test location and the next adjacent acceptable test location.
      3) Patch core holes.
      4) Conduct testing at no additional cost to OWNER.
   b. ENGINEER:
      1) Graph deficient areas by plotting new cores and original cores to define deficient areas assuming the following.
         a) The graph represents the thickness of the pavement.
         b) Thicknesses vary linearly along the pavement length from core depth to core depth.
         c) The pavement is a constant depth in the transverse direction.
      2) Accept Lot at full pay if new information shows compliance, or
      3) Accept Lot at pay reduction using new test information, or
      4) Reject Lot.

G. **Profile Roughness and Profile Deviation**: Section 32 01 31.

1.9 **WARRANTY**

A. Joints at Street Fixtures and Portland Cement Concrete Flat Work: If wider than 1/2 inch before end of the correction period seal joints with asphalt rubber or rubberized asphalt; Section 32 01 17.

PART 2 PRODUCTS

2.1 **MATERIALS**

A. Bituminous concrete, Section 32 12 05.

B. Rubberized asphalt concrete, Section 32 12 08.

C. Tack coat, Section 32 12 13.13.

D. Prime coat, Section 32 12 13.19.

E. Paving geotextile, Section 31 05 19.

F. Paving geogrid, Section 31 05 21.

PART 3 EXECUTION

3.1 CONSTRUCTION EQUIPMENT

A. Paver Machine: Use track equipment when operating on fabrics, geogrids or pavement mats hotter than 180 deg F

B. Compactors: Steel wheel static or vibratory. Use pneumatic tire roller for intermediate rolling only.

3.2 PREPARATION

A. General:

1. Locate and preserve utilities Section 01 31 13. Contact utility companies and other agencies, for dangerous concentration of combustible, flammable, or explosive matter.
2. Lower Street Fixtures if paving machine is not capable of passing over the fixtures.
3. Remove vegetation from cracks, edges and joints. Sweep surface clean. Blow cracks clean. Remove leaves.
4. Fill cracks and fix Potholes, Section 32 01 17.
5. Stabilize Portland cement concrete subgrade slabs.

B. Traffic Control:

1. Implement notification and traffic control plan requirements, Section 01 55 26. Do not proceed without certified flaggers.
2. Apply temporary lane marking tape or paint after layout has been verified with ENGINEER.

C. Aggregate Base Course:

1. Verify base course is placed to grade, compacted and dampened.
2. If indicated, follow Section 31 31 19 requirements for herbicide treatment or Section 32 12 13.19 for prime coat applications.

3.3 PROTECTION

A. Trees, Plants, Ground Cover:

1. Protect trees, plants and other ground cover from damage.
2. Prune trees to allow equipment passage underneath, Section 32 01 93. Repair tree damage at no additional cost to OWNER.

B. Protect all structures, including curb, gutter, sidewalks, guard rails and guide posts from physical damage. Remove spatter, over-coat, or mar.

C. Do not discharge bituminous materials into borrow pits or gutters.

D. Protect hot pavement from traffic until cool enough not to become marred.

E. Remove saw-cut dust immediately. Protect neighborhood, storm drains and down-stream fish habitat.

3.4 TEMPORARY SURFACING

A. Place, roll, maintain, remove and dispose of temporary Pavement surfaces.

B. In sidewalk areas construct temporary pavements at least 1 inch thick and in all other areas at least two (2) inches thick. At major intersections and other critical locations a greater thickness may be required.

3.5 LINE AND GRADE CONTROL

A. Provide necessary survey stakes for horizontal and vertical control.

B. Furnish, place, and maintain supports, wire devices, and materials as required to provide continuous line and grade reference controls for placing pavement, matching existing pavement surfaces, etc.

3.6 FABRIC PLACEMENT

A. Section 31 05 19.

3.7 PAVEMENT PLACEMENT

A. General:

1. Barricade off or eliminate fall off edges.
2. Provide continuous forward paver movement so temperature 10 feet behind paver is as follows:
   a. Warm Mix Placement: 200 deg F minimum.
   b. Hot Mix Placement:

Table 3 – Minimum Pavement Temperature in Degrees F.

Air Temperature Deg F	Compacted Mat Thickness					
	3/4"	1"	1-1/2"	2"	3"	4"+
45 – 50	–	–	–	–	280	265
50 - 59	–	–	–	280	270	255
60 - 69	–	–	285	275	265	250
70 - 79	285	285	280	270	265	250
80 - 89	280	275	270	265	260	250
90 +	275	270	265	260	250	250

B. Overlays or Subsequent Lifts:

1. Allow new base pavement or new inlay pavement to cure (harden) before placing overlays.
2. Apply tack coat per Section 32 12 13.13 if inlay or sub-base Pavement surface is dirty or older than 24 hours.

C. Irregular Areas: Handwork is acceptable if specified grade, slope, compaction and smoothness are achieved.

D. Compaction:

1. Test mix placement until a compaction pattern is acceptable to CONTRACTOR. Continue random quality control testing.
2. Do not over compact or under compact.

3. Complete compaction before the following temperature are reached:
   a. 180 deg F for hot mixes.
   b. 140 deg F for warm mixes.

E. Joints:
1. Construct joints to industry standards for texture, density and smoothness.
2. Clean contact surfaces and apply tack coat. Ensure continuous bond between old and new pavements, or between successive day's work.
3. Offset longitudinal joints a minimum of 12 inches in succeeding courses and at least six (6) feet transversely to avoid a vertical joint through more than one course. In the top course restrict longitudinal joint to 1 foot either side of lane lines.
4. Prevent traffic, including construction traffic, from crossing vertical edges. Apply tack coat to vertical edges before making another pass with paver if mix has cooled to 90 deg F

3.8 TOLERANCES

A. Compaction: Target is 94 percent of ASTM D2041 (Rice density) plus or minus two (2) percent.

B. Lift Thickness: If not indicated, meet the following tolerances.

Table 4 – Lift Thickness Tolerance

Mix Design Method	Minimum	Maximum
Marshall	2 times maximum aggregate size	Not more than limits established by manufacturer of compactor equipment
Performance Grade (Superpave)	4 times *nominal* aggregate size	
NOTES (a) Thickness is measured after compaction.		

C. Smoothness:
1. Parallel to Centerline: Section 32 01 31.
2. Cross Slope: 1/4 inch in 10 feet except at cross section grade breaks.

3.9 REPAIR

A. Repair ride disturbing or unsafe butt joints. Repair expense is at no additional cost to OWNER.

B. If pavement smoothness is deficient, follow Section 32 01 31 repair requirements.

C. Corrective Action for Profile Deviations ("Must Grinds"): Grinding is acceptable. See Section 32 01 26. Apply a fog seal over grind areas. See Section 32 01 13.50. If depressions cannot be corrected by grinding, remove and replace.

D. Corrective Action for Profile Roughness Index: Grinding is acceptable. Re-profile corrected segments to verify ride index meets tolerance. Apply a fog seal over grind areas. See Section 32 01 13.50.

E. When thickness is deficient, place additional material over deficient areas. DO NOT skin patch. Mill for inlay if necessary.

F. Defective Joints, Seams, Edges: Repair.

G. Unacceptable Paving: Remove and replace.

3.10 **OPENING TO TRAFFIC**

A. Temperature of pavement surface is not more than 180 deg F

END OF SECTION

Open driveway approach

1. GENERAL

A. Variance from specified dimensions and slopes must be acceptable to the ENGINEER. System configuration may be changed at ENGINEER's discretion.

B. Field Changes to Slope Requirements:
   1) Grades may have a 6 percent change in slope over a 11 feet wheel base run for both crest or sag vertical curves.
   2) Where heavy truck use and fire truck access applies, or to improve design speed, design grades should be cut in half.
   3) Specific uses or site conditions may require profile design submittal for review and acceptance.

C. Additional requirements are specified in APWA Section 32 16 13.

2. PRODUCTS

A. Base Course: Untreated base course, APWA Section 32 11 23. Do not use gravel as a base course without ENGINEER's permission.

B. Expansion Joint Filler: 1/2-inch thick type F1 full depth, APWA Section 32 13 73..

C. Concrete: Class 4000, APWA Section 03 30 04. If necessary, provide concrete that achieves design strength in less than 7 days. Use caution; however, as concrete crazing (spider cracks) may develop if air temperature exceeds 90 degrees F.

D. Reinforcement: Galvanized or epoxy coated, deformed, 60 ksi yield grade steel, ASTM A615.

E. Concrete Curing Agent: Clear membrane forming compound with fugitive dye (Type ID Class A), APWA Section 03 39 00.

3. EXECUTION

A. Base Course Placement: APWA Section 32 05 10. Maximum lift thickness before compaction is8- inches when using riding equipment or 6-inches when using hand held equipment. Compaction is 95 percent or greater relative to a modified proctor density, APWA Section 31 23 26.

B. Reinforcement: Not required if driveway apron is constructed without a cold joint.

C. Concrete Placement: APWA Section 03 30 10.
   1) Install expansion joints vertical, full depth, with top of filler set flush with concrete surface.
   2) Install contraction joints vertical, 1/8-inch wide or 1/4 slab thickness if the slab is greater than 8-inches thick. Maximum length to width ratio for non-square panels is 1.5 to 1. Maximum panel length (in feet) is 1.5 times the slab thickness (in inches).
   3) Provide 1/2-inch radius edges. Apply a broom finish. Apply a curing agent.

D. Protection and Repair: Protect concrete from deicing chemicals during cure. Repair construction that does not drain. If necessary, fill flow-line with water to verify.

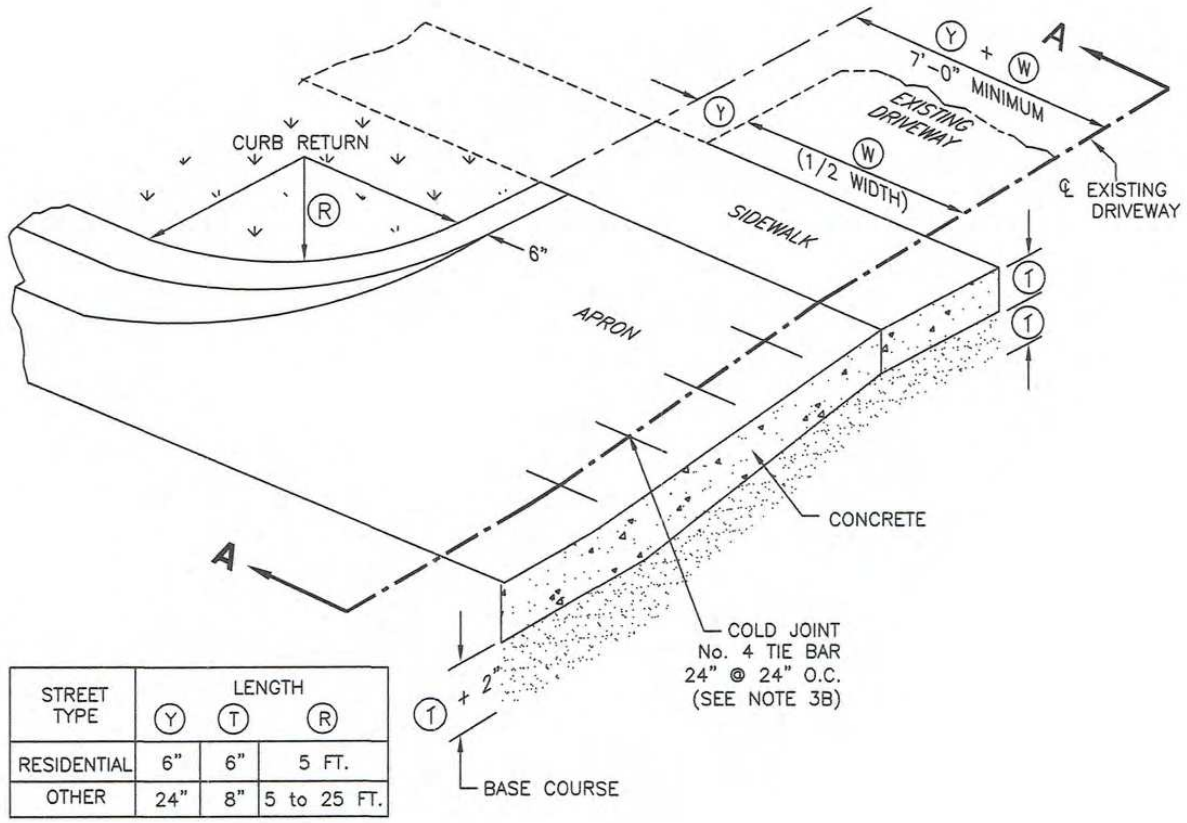

STREET TYPE	LENGTH Y	T	R
RESIDENTIAL	6"	6"	5 FT.
OTHER	24"	8"	5 to 25 FT.

OBLIQUE

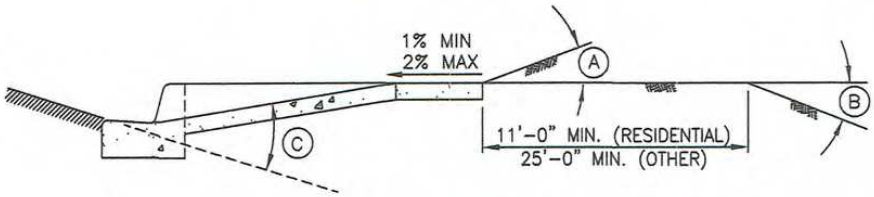

STREET TYPE	BREAK OVER ANGLE (MAXIMUM) A	B	C
RESIDENTIAL	16%	12%	16%
OTHER	6%	8%	10%

SECTION A-A - APPROACH REQUIRING SERVICE TRUCK ACCESS

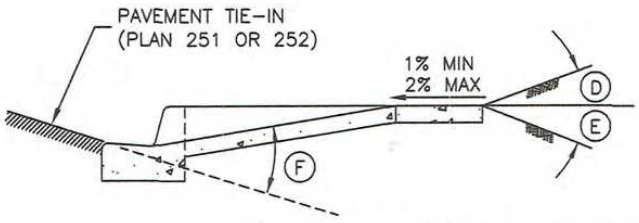

STREET TYPE	BREAK OVER ANGLE (MAXIMUM) D	E	F
RESIDENTIAL	16%	12%	16%
OTHER	6%	8%	10%

SECTION A-A - TYPICAL DRIVEWAY APPROACH

DIVISION 2b EARTHWORK
2b.01 General
2b.02 Excavation For Structures
2b.03 Backfill Around Structures
2b.04 Construction Of Embankments And Fills
2b.05 Compacting Earth Materials

2b.01 General

This Division defines the requirements for excavation and backfill for structures, construction requirements for embankments and fills, and subgrade preparation for pavements and other surface improvements.

2b.02 Excavation For Structures

Where suitable subgrade soils exist structures shall be founded on undisturbed original subsoil. All unauthorized excavation below the specified subgrade shall be replaced with concrete, monolithic with that of the slab above or with coarse gravel thoroughly compacted into place.

Subgrade soils for structures not suitable for proper support shall be replaced with firm, dense, thoroughly compacted and consolidated material free from mud and muck. Coarse gravel or crushed stone may be used for subsoil reinforcement if satisfactory results can be obtained thereby. Such material shall be applied in thin layers, each layer being embedded in the subsoil by thorough tamping. All excess soil shall be removed to compensate for the displacement of the gravel or crushed stone and the finished elevation of any subsoil reinforced in this manner shall not be above the specified subgrade elevation.

2b.03 Backfill Around Structures

Backfill around structures shall be placed to the lines shown on the drawings, or as directed. After completion of foundation footings and walls and other construction below the elevation of the final grades, and prior to backfilling, all forms shall be removed and the excavation shall be cleaned of all trash and debris. Material for backfilling shall consist of suitable excavated material or imported sand, gravel, or other suitable material, and shall be placed in lifts which will allow the densities to be achieved and which in any event shall not exceed 8-inches in uncompacted thickness. Each layer shall be compacted by hand or machine tampers or by other suitable equipment to a density equal to 96% of maximum dry density as measured by AASHTO T-180 (ASTM D1557).

2b.04 Construction Of Embankments And Fills

Unsuitable materials, such as roots, vegetation, or other organic material that occur in the foundations for embankments and fills shall be removed by clearing, stripping, and/or grubbing. Where suitable materials occur after stripping, the foundation shall be scarified to a depth of not less than 6-inches, and the loosened material shall be moistened and compacted as hereinafter specified for each layer. All materials in embankments and fills shall be placed, moistened, and compacted as provided in the following paragraphs.

When the embankment or fill exceeds the amount of excavation, sufficient additional material shall be obtained from borrow pits provided by the Developer. All material proposed to be imported shall be subject to the review and approval of the Engineer or their designee prior to starting of hauling operations.

The materials used for embankment and fill construction shall be free from sod, grass, trash, clods, rocks larger than 8-inches in diameter, and all other material unsuitable for construction of compacted

fills.

Grading of completed embankments and fills shall bring the surfaces to a smooth, uniform condition with final grades being within 0.1-foot of the design grade.

2b.05 Compacting Earth Materials

The material shall be deposited in horizontal layers having a thickness of not more than 10-inches prior to being compacted as hereinafter specified; provided that when mechanical equipment is used for placing and compacting the material on a sloping foundation, the layers may be placed parallel to the foundations. The distribution of materials shall be such that the compacted material will be homogeneous and free from lenses, pockets, or other imperfections.

Prior to and during compaction operations, the material shall have the optimum moisture content required for the purpose of compaction, and the moisture content shall be uniform throughout the layers, insofar as practicable. The moisture shall be controlled at two percent plus or minus of the optimum moisture as determined by AASHTO T-180 (ASTM D1557). Moistening of the material shall be performed at the site of excavation, but such material shall be supplemented as required by sprinkling at the site of construction. If the moisture content is more than optimum for compaction, the compaction operations shall be delayed until such time as the material has dried to the optimum moisture content. When the material has been conditioned as hereinbefore specified, the backfill or embankment shall be compacted as follows:

A. All trenches in the City Right of Way (typically under roadways and extending one foot beyond the proposed back of walk and under sidewalks and drive approaches to at least one foot each side of the edge of the slab), the fill or embankment material shall be compacted to a density equal to not less than 96% of maximum dry density as measured by AASHTO T-180 (ASTM D1557).

B. Other fills and embankments not listed above shall be compacted to a density equal to not less than 90% of maximum dry density, as measured by AASHTO T-180 (ASTM D1557).

DIVISION 4c VALVES, COUPLINGS AND FIRE HYDRANTS

4c.01 General
4c.02 Resilient Seated Gate Valve
4c.03 Butterfly Valve
4c.04 Valve Boxes
4c.05 Couplings
4c.06 Fire Hydrants

4c.01 General

This Division covers distribution valves to be used in the water system, couplings and fire hydrants.

4c.02 Resilient Seated Gate Valve

Valves in sizes 4-inch through 12-inch shall be of the iron body, non rising bronze stem, resilient seated type, manufactured to equal or exceed all applicable AWWA C-509 latest revision and all specific requirements outlined in these specifications. Acceptable manufacturers are Mueller Company, American Flow Control and Clow Valve Company, as directed by the City.

A. Valves shall open left and be provided with 2-inch square operating wrench nuts unless otherwise specified.

B. When valves are 'Mechanical Joint', they shall be furnished with all necessary glands, gaskets, followers, bolts and nuts to complete installation.

C. The disc shall have integrally cast ASTM B62 bronze stem nut to prevent twisting, binding or angling of the stem. Designs with loose stem nuts are not acceptable.

D. Bronze valve stems shall be interchangeable with stems of the double disc valves of the same size, direction of opening and manufacture.

E. All internal ferrous surfaces shall be coated, holiday free, to a minimum thickness of 4-mil with a two part thermo setting epoxy coating. Said coating shall be non-toxic, impart no taste to the water, formulated from materials deemed acceptable in the Food and Drug Administration Document Title 21 of the Federal Regulations on food additives, Section 121.2514 entitled Resins and Polymeric Coatings. It shall protect all seating and adjacent surfaces from corrosion and prevent build-up of scale or tuberculation.

F. The sealing element shall be secured to the disc with self-locking stainless steel screws, and it shall be field replaceable, and shall be such that it cannot be installed improperly.

G. Stem failure from over torquing in either the open or closed position shall occur externally at such a point as to enable the stem to be safely turned by use of a readily available tool after exposure of the valve through excavation.

H. Valve design shall incorporate a positive metal to metal stop to prevent over-compression of the sealing element.

I. A full faced composition gasket placed between machined body and bonnet flanges is required to eliminate cold flow or creep action present with "O" ring gasketed bodies.

J. Valves shall have a test plug in the bonnet area to vent air and allow line pressure testing.

K. The exterior of the valves shall be Asphalt Varnish, JAN-P-450. If exterior epoxy is used, all bolts and nuts shall be made of Stainless Steel to prevent galvanic corrosion of said nuts and bolts due to insulation from the ferrous valve and line.

4c.03 Butterfly Valve

All butterfly valves (Acceptable manufacturers are Mueller Company, M&H, Avtek and Clow Valve Company) shall conform to the latest revision of ANSI/AWWA Standard C504, Class 150-B, and comply with the following:

A. Valve bodies shall be cast iron, ASTM A126 Class B. Body ends shall be flanged with facing and drilling in accordance with ANSI B16.1, Class 125; or mechanical joint in accordance with ANSI/AWWA C-111/A21.11. All 'Mechanical Joint' end valves shall be furnished complete with joint accessories (bolts, nuts, gaskets, and glands). All valves shall conform with ANSI/AWWA Standard C-504, Table 3, Laying Lengths for Flanged Valves and Minimum Body Shell Thickness for all Body Types.

B. Valve disc shall be Ductile Iron ASTM A536, Grade 65-45-12. Valve disc shall be of the offset design providing 360 degree uninterrupted seating.

C. The resilient seat shall be natural rubber bonded to an 18-8, Type 304 Stainless Steel retaining ring secured to the disc by 18-8, Type 304 Stainless Steel screws. The seat shall be capable of mechanical adjustment in the field and field replaceable without the need for special tools. Valve body seat shall be 18-8, Type 304 Stainless Steel.

D. Valve shafts shall be 18-8, Type 304 Stainless Steel. Shafts shall be of the two piece stub design and attached to the disc by means of "O" ring sealed taper pins with lock nuts.

E. The valve assembly shall be furnished with a non-adjustable factory set thrust bearing designed to center the valve disc at all times.

F. Shaft bearings shall be contained in the integral hubs of the valve body and shall be self-lubricated sleeve type.

G. Valve shaft seal shall consist of "O" rings. Where the valve shaft projects through the valve body for actuator connection, the "O" ring packing seal shall be field replaceable as a part of a removable bronze cartridge.

H. When manual actuators are required they shall be of the traveling nut design capable of withstanding 450-foot-pounds of input torque against the open and closed stops. All actuators shall have adjustable mechanical stop limits. The closed position stop shall be externally adjustable. Valves shall be installed with the shaft horizontal unless otherwise directed by the City Engineer and shall be provided with a 2-inch square operating nut for manually operating the valve with a "T" handle wrench.

I. All valves shall be coated with epoxy in conformance to AWWA Standard C-550, latest revision. Interior wetted ferrous surfaces shall be coated a nominal 10 mils thick for long life; and body exterior shall have a minimum of 3 to 4-mil coating thickness in order to provide superior base for field-applied finish coats.

4c.04 Valve Boxes

All buried valves shall be installed complete with two-piece, cast iron, screw type, 5-1/4-inch shaft valve box with locking lid. The lid shall have the word "Water" or "Irrigation", as appropriate, cast in the metal.

Valves and valve boxes shall be installed where shown on the drawings. Valves and valve boxes shall be set within 1/4 to 1/2-inch plumb. Valve boxes shall be vertically centered directly over the valve within a tolerance of +/- 1/2-inch. Valves shall be aligned with property lines where possible. Earth fill shall be carefully tamped around the valve box to a distance of 4-feet on all sides of the box, or to the undisturbed trench face if less than 4-feet. Valve boxes shall have the interiors cleaned of all foreign matter before installation and before and after backfill, being accessible and free of debris.

All valve boxes located in streets shall be installed as nearly to grade as possible. Valve boxes placed in bituminous asphalt concrete surfaces, after the pavement is in place, the valve boxes shall be raised to grade (1/4 – 1/2-inch lower than asphalt), the surrounding asphalt shall be neatly cut to form a circular opening 2.5-feet in diameter with the valve box centered, and a 12-inch thick concrete collar shall be cast around the box. Valve boxes shall be installed as shown on the Drawings. Valve boxes in off-road areas shall extend 6-inches above grade and be collared and marked.

4c.05 Couplings

Acceptable manufacturers of couplings are HYMAX (grip), Romac (alpha) or Smith-Blair (18-inch long). Cast iron sleeves may be utilized, as approved by the City Engineer. Couplings shall be of the straight, transition, or reducing style as required by the City for the specific installation. All steel fittings and bolts shall be coated with a non-oxide coating and wrapped with 12-mil polyethylene.

4c.06 Fire Hydrants

Fire hydrants shall be "traffic model" type designed to conform to AWWA C502 and shall be of either the compression or toggle joint type. Hydrants shall be the Mueller Modern Centurion A-442, Clow Medallion or Waterous Pacer (with alpha base).

Hydrant valves shall be a minimum of 6-inch size. Hydrants shall be supplied complete with two 2-1/2-inch hose nozzles and one 4-1/2-inch pumper nozzle. All nozzles shall be provided with National Standard threading. A one cubic yard gravel sump shall be provided at each hydrant. All hydrants shall be mechanical joint end and shall be connected to the main by means of a flanged tee and flanged by mechanical joint auxiliary gate valve (or flange by alpha gate valve) and box as shown on Kaysville Standard Drawings. Each hydrant shall also be supplied with O-ring seals, a National Standard pentagon operating nut which is designed for clockwise rotation closing, and a 6-inch mechanical joint inlet.

All hydrants shall be factory painted red and must function properly. Where a parkstrip exists, hydrants shall be centered in the parkstrip +/- 3-inches. Hydrants must have a 3-foot minimum clear space around the hydrant. Hydrants must be located as shown on approved plans/drawings and be set vertically within +/- 1-inch out of level (plumb).

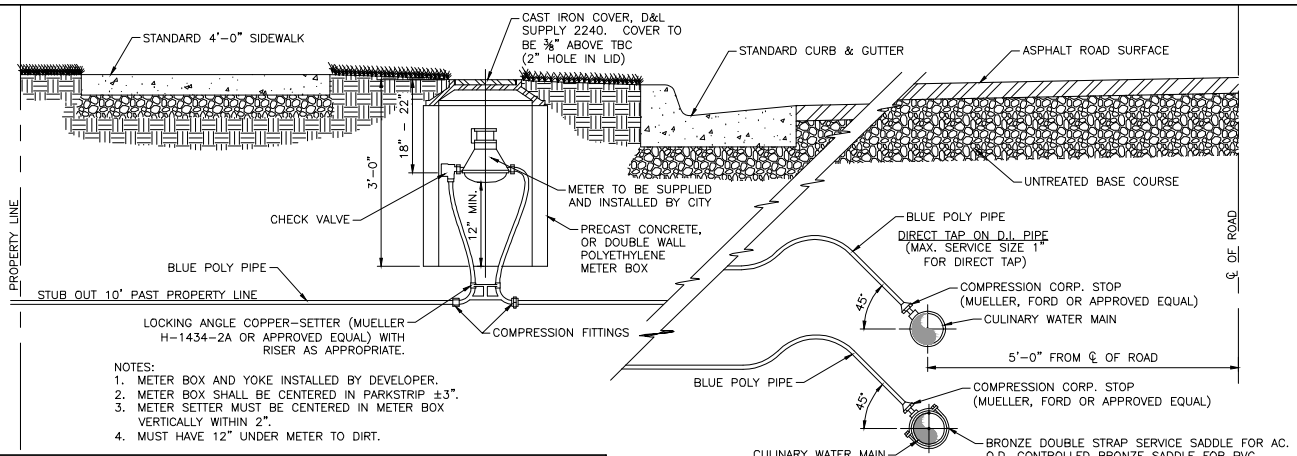

NOTES:
1. METER BOX AND YOKE INSTALLED BY DEVELOPER.
2. METER BOX SHALL BE CENTERED IN PARKSTRIP ±3".
3. METER SETTER MUST BE CENTERED IN METER BOX VERTICALLY WITHIN 2".
4. MUST HAVE 12" UNDER METER TO DIRT.

3 TYPICAL WATER CONNECTION
SCALE: N.T.S.

KAYSVILLE CITY CORPORATION WATER SERVICE INFORMATION						
SERVICE SIZE	METER BOX SIZE	TYPE OF MATERIAL FOR METER BOX	WATER METER	CONNECTION TYPE	BYPASS	DIST. BETWEEN FLANGE
3/4"	18" DIA	CONCRETE, GALVANIZED, POLYETHYLENE	BY CITY	NPT	NO	---
1"	24" DIA	CONCRETE, GALVANIZED, POLYETHYLENE	BY CITY	NPT	NO	---
2"	48" DIA	CONCRETE	OCTAVE (TURBINE METER)	FLANGE	1"	15 ¼"
3"	60" DIA	CONCRETE	OCTAVE (TURBINE METER)	FLANGE	1"	*
4"	4'X6' BOX	CONCRETE	OCTAVE (TURBINE METER)	FLANGE	2"	*
*CONTACT KAYSVILLE CITY						

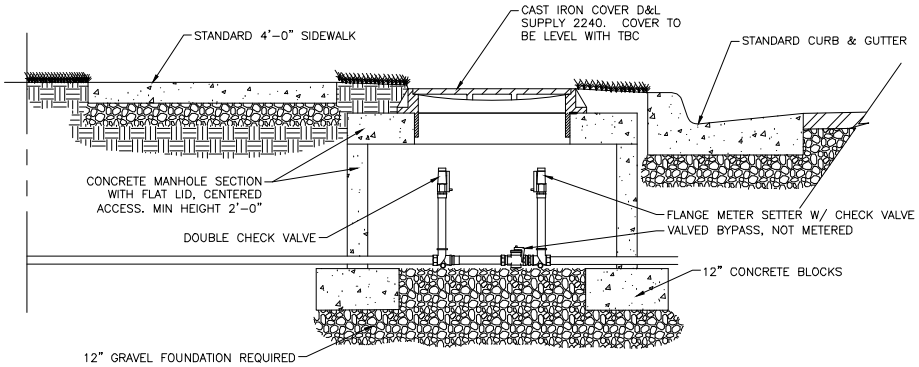

1 TYPICAL FLANGED METER SETTER WATER CONNECTION
SCALE: N.T.S.

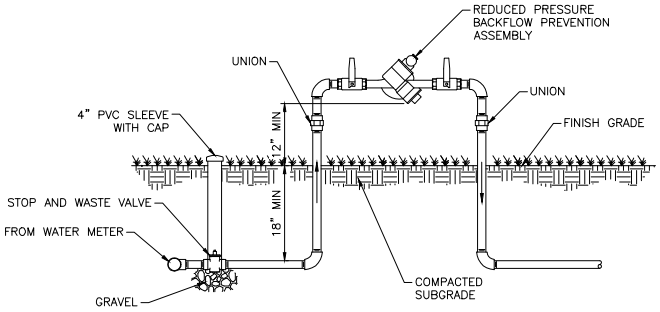

NOTE:
ALL FITTINGS AND NIPPLES FROM POINT OF CONNECTION TO MAINLINE SHALL BE BRASS.

2 REDUCED PRESSURE BACKFLOW PREVENTION ASSEMBLY
SCALE: N.T.S.

REUSE OF DRAWINGS
THIS DOCUMENT, AND THE IDEAS AND DESIGNS INCORPORATED HEREIN, AS AN INSTRUMENT OF PROFESSIONAL SERVICE, IS THE PROPERTY OF J-U-B ENGINEERS, Inc, AND IS NOT TO BE USED, IN WHOLE OR PART, FOR ANY OTHER PROJECT WITHOUT THE EXPRESS WRITTEN AUTHORIZATION OF J-U-B ENGINEERS, Inc.

NO.	REVISION DESCRIPTION	BY	APR.	DATE

FILE:
PROJ. #:
PLOT DATE: 1/20/2021
LAST UPDATED: 12/3/2020
DRAWN BY: KEF
DESIGN BY:
CHECKED BY:

Kaysville City

KAYSVILLE CITY CORPORATION
DEVELOPMENT STANDARDS

TYPICAL WATER SERVICE CONNECTION DETAILS

SHEET 4

Plot Date:1/20/2021 4:21 PM Plotted By: Mark Jenkins
Data Created:12/3/2020 (KAYSPUB)(P:\PROJECTS\JUB\KAYSVILLE STANDARDS\CAD\04-WATER SERVICE CONNECTION DETAILS.DWG

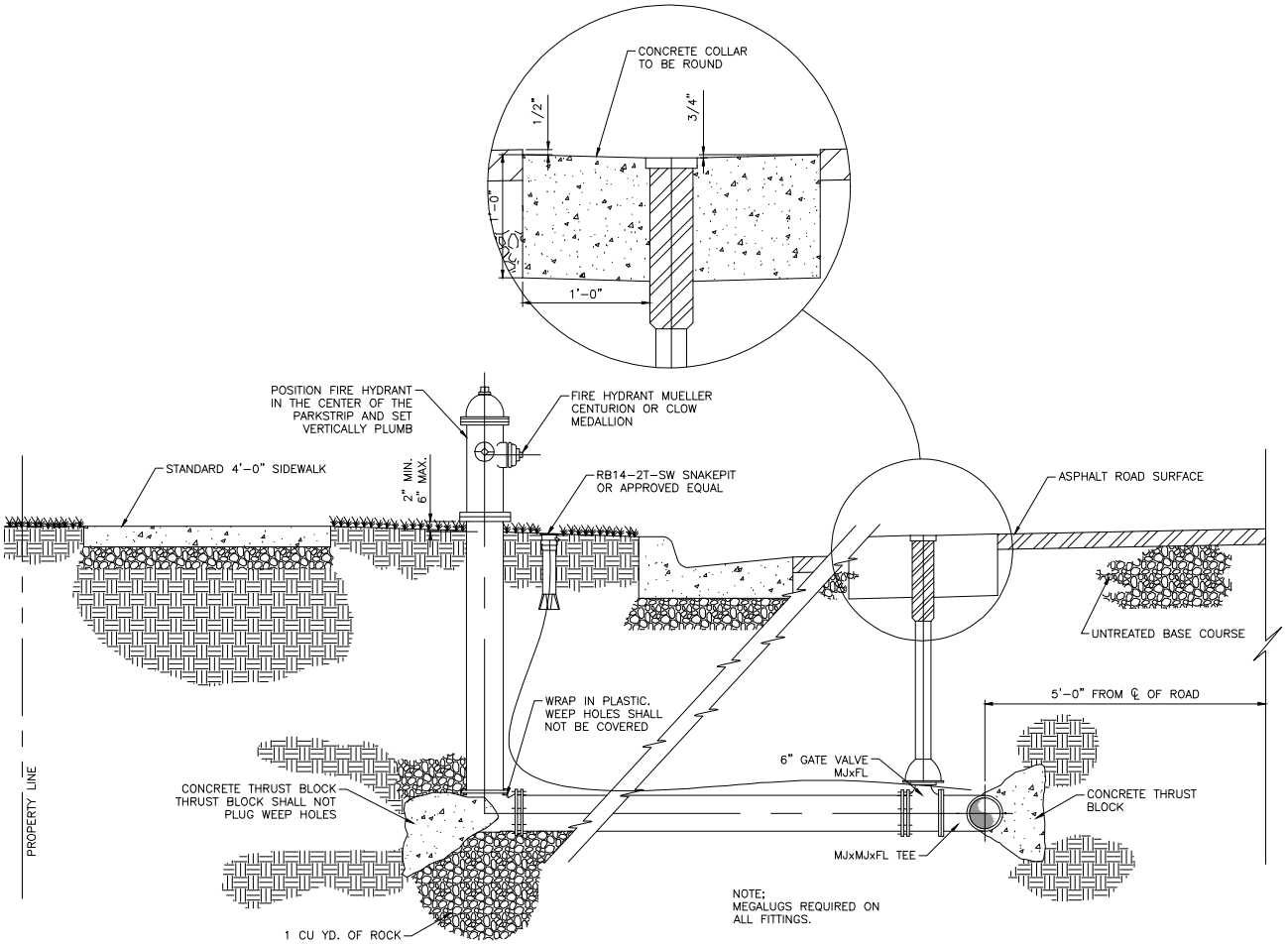

TYPICAL FIRE HYDRANT CONNECTION

SCALE: N.T.S.

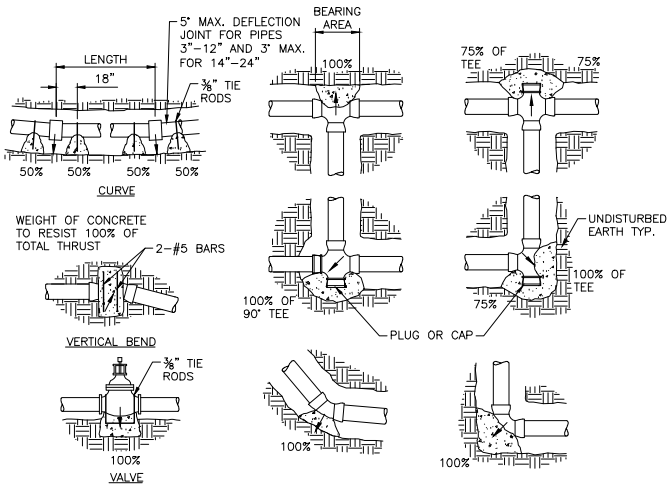

DETAIL NOTES:

1. ALL MJ AND FLANGED FITTINGS TO BE WRAPPED WITH POLYETHYLENE WRAP PRIOR TO POURING THRUST BLOCK.
2. FIGURE (100%) AT THRUST BLOCK INDICATES PERCENT OF TOTAL THRUST TO BE APPLIED FOR BEARING AREA.
3. ARROW INDICATES THRUST DIRECTION
4. CONCRETE FOR THRUST BLOCKS TO BE 2000 PSI MIX.

SIDE THRUST PER 100 PSI PRESSURE PER DEGREE OF DEFLECTION

PIPE SIZE - IN	SIDE THRUST - LBS	PIPE SIZE - IN	SIDE THRUST - LBS
4	35	14	377
6	72	16	486
8	122	18	665
10	197	20	790
12	278	24	1150

NOTE: MULTIPLY THRUST BY DEGREE OF DEFLECTION TO OBTAIN TOTAL THRUST

SIDE THRUST PER 100 PSI PRESSURE PER DEGREE OF DEFLECTION

PIPE SIZE - IN	DEAD END OR TEE	90° ELBOW	45° ELBOW	22.5° ELBOW
4	19	27	15	7
6	39	55	30	15
8	67	94	51	26
10	109	154	84	43
12	155	218	119	61
14	210	296	161	82
16	272	383	209	106
18	351	494	269	137
20	434	611	333	169
24	623	878	478	244

TABLE NOTES:

1. USE THE MAXIMUM INTERNAL PRESSURE ANTICIPATED (I.E. HYDROSTATIC TEST PRESSURE, POSSIBLE SURGE PRESSURE DUE TO PUMP SHUT-OFF, ETC.)
2. SEE SOILS REPORT FOR BEARING STRENGTH OF SOIL. IN THE ABSENCE OF A SOILS REPORT, AN AVERAGE SOIL (SPADABLE MEDIUM CLAY) CAN BE ASSUMED TO HAVE A BEARING STRENGTH OF 2000 PSF.

THRUST BLOCK DETAILS

SCALE: N.T.S.

EXAMPLE THRUST BLOCK CALCULATION:

1. 8" 90° ELBOW, PRESSURE = 200 PSI
2. FROM TABLE, THRUST = 94 X 200 = 18,800 LBS
3. ASSUME BEARING STRENGTH OF SOIL = 2000 PSF
4. $\frac{18800}{2000}$ = 9.4 FT² = AREA OF BEARING REQ'D FOR THRUST BLOCK

REUSE OF DRAWINGS
THIS DOCUMENT, AND THE IDEAS AND DESIGNS INCORPORATED HEREIN, AS AN INSTRUMENT OF PROFESSIONAL SERVICE, IS THE PROPERTY OF J-U-B ENGINEERS, Inc, AND IS NOT TO BE USED IN WHOLE OR PART, FOR ANY OTHER PROJECT WITHOUT THE EXPRESS WRITTEN AUTHORIZATION OF J-U-B ENGINEERS, Inc.

NO.	REVISION DESCRIPTION	BY	APR.	DATE

FILE:
PROJ. #:
PLOT DATE: 1/20/2021
LAST UPDATED: 1/20/2021
DRAWN BY: KEF
DESIGN BY:
CHECKED BY:

Kaysville City

KAYSVILLE CITY CORPORATION DEVELOPMENT STANDARDS

TYPICAL FIRE HYDRANT AND THRUST BLOCK DETAILS

SHEET 5

File Date:1/20/2021 4:21 PM | Plotted By: Mark Jenkins
Data Created:1/19/2021 K:\SYS\PUB\PROJECTS\JUBKAYSVILLE STANDARDS\CAD\DS-PIPE-HYDRANT_THRUST BLOCK.DWG

DIVISION 5b RESTORATION OF SURFACE IMPROVEMENTS

5b.01 General
5b.02 Field Verification Of Improvements
5b.03 Removal Of Pavement, Sidewalks, Curbs, Etc.
5b.04 Materials
5b.05 Restoring Concrete Or Ashphalt Street Surfaces
5b.06 Crack Filling/Sealing
5b.07 Asphalt Coatings
5b.08 Gravel Surface
5b.09 Miscellaneous Improvements
5b.10 Restoration Of Surfaces
5b.11 Cleanup
5b.12 Pavement Markings

5b.01 General

The Developer shall be responsible for the protection and the restoration or replacement of any improvements existing on public or private property at the start of work or placed there during the progress of the work.

Existing improvements shall include but not to be limited to permanent surfacing, curbs, gutters, sidewalks, planted areas, sprinklers, ditches, driveways, culverts, fences, decorative features and walls. All improvements shall be reconstructed to equal or better, in all respects, than the existing improvements removed. Any work being done in the City right of way shall first require an approved excavation permit. There are costs associated with these permits, based on the consolidated fee schedule. All work done in the City right of way shall conform with the requirements of the excavation permit.

5b.02 Field Verification Of Improvements

The Developer will be deemed to have carefully examined the site of the work and to have acquainted themselves with all conditions relating to the protection and restoration of existing improvements. The Developer shall be responsible to protect or restore existing improvements, whether shown on the drawings or not, unless agreed to in writing by the effected property owner and approved by the City.

5b.03 Removal Of Pavement, Sidewalks, Curbs, Etc.

Prior to any removal of road surface, the surface shall be cut vertically along the lines forming the trench, in such a manner as to not cause damage to adjoining pavement, sidewalk, curb and gutter, driveway, etc. For removal of sidewalk, curb and gutter, vertical cuts shall be made in the concrete only at the next adjacent joint. The portion to be removed shall then be broken up in a manner that will not cause damage to the asphalt or concrete outside the limits of the cuts; however, any surface damaged by the Developer or their work shall be replaced at the Developer's expense. The Public Works inspector shall determine the extents or limits of adjacent damage requiring replacement.

Broken paving materials and debris shall be removed immediately from the site of the work. If 4-feet or less of asphalt is left between the edge of a trench and the lip of the curb (or edge of pavement if there is no curb) after removal, then the asphalt shall be removed to the lip of curb (or edge of road if there is no curb) to safeguard against differential settlement.

5b.04 Materials

Materials used for repair or replacement of surface improvements shall be equal to or better than the material removed:

A. Untreated Base Course. Untreated base course shall comply with Utah Department of Transportation Standard Specifications, latest edition. The Developer shall take samples of the untreated base course on a random basis. All materials not meeting the tolerance requirements shall be removed from the project and replaced with specification material.

B. Asphalt. The asphalt surface shall be hot-rolled plant mix in accordance with the requirements of Division 5a.

C. Concrete. Concrete shall comply with section 02753 of the Utah Department of Transportation Standard Specifications.

5b.05 Restoring Concrete Or Ashphalt Street Surfaces

Where trenches are in or cross asphalt or concrete surfaced roads, traffic lanes, driveways, parking areas, etc., the asphalt or concrete surface must be restored in accordance with the requirements of the excavation permit, including, but not limited to:

A. Before Excavation. All existing asphalt or concrete surfaces shall be saw cut or roto-milled to a square edge before excavation.

B. Temporary Graded Surface. Until resurfacing can be done in paved areas a temporary untreated base course surface shall be placed deep enough to provide a minimum of 12-inches below the bottom of the asphalt surface and shall be brought flush with the top of the adjacent paved surface.

   The untreated base shall be placed in the trench at the time it is backfilled. Excess material shall be removed from the premises immediately. The temporary untreated base course surface will be maintained as needed by the Developer until the asphalt is placed.

C. Preparation for Paving. The area over trenches to be resurfaced shall be graded and rolled with a roller weighing not less than 12-tons, until the subgrade is firm and unyielding. Mud or other soft or spongy material shall be removed and the void filled with untreated base course and rolled and tamped thoroughly in layers not exceeding 12-inches in thickness. Sink holes in asphalt shall be cut out, excavated and replaced. Asphalt sinking of any kind will be cut out and replaced once the problem has been fixed. The edges of trenches which deteriorate or crumble prior to paving shall be removed and trimmed neatly before resurfacing.

   Before any permanent resurfacing is placed, the Developer shall trim the existing paving to clean, straight lines as nearly parallel to the centerline of the trench as practicable.

   Following backfill, the existing adjacent asphalt paving shall be cut back a minimum of an additional 18-inches beyond the previous cuts (T-Cut) for the excavation.

D. Asphalt Surface. The asphalt surface shall be restored by standard paving practices to a minimum thickness as indicated in Division 5a and on the standard drawings. Pavement over 3-inches shall be placed and rolled in two lifts. The asphalt surface should be 1/4-inch to 1/2-inch above the lip of curb and gutter. If the asphalt is more than 1/2-inch or less than 1/4-inch over the lip of the curb and gutter, an overlay to adjust the grade shall be required, as directed by the City Engineer.

   Pavement restoration shall include priming of pavement edges with Type MC-70 bituminous material (tackifier) and placing rolled plant hot mix asphalt material to a level of 1/8-inch" to 1/4-inch above the adjacent pavement surfaces. Areas where there is unraveling of asphalt will be replaced.

5b.06 Crack Filling/Sealing

When pavement crack repairs are needed, vegetative growth should be removed from cracks, edges, and joints. Cracks should be prepared by blowing them out and dry prior to being filled by crack sealant. Melting of sealant should be per manufacturer's guidelines. The pavement crack seal should be dry before applying asphalt coatings.

Crack seal material should be per UDOT Standards 02745, Section 2.3 HOT-POUR CRACK SEALANT FOR BITUMINOUS CONCRETE or applicable current APWA standard 32.01.17 PAVEMENT CRACK SEAL. Crack seal shall be done prior to all asphalt coating projects.

5b.07 Asphalt Coatings

Depending on various factors, including, but not limited to the age and condition of adjacent asphalt, project scheduling and traffic conditions, asphalt surfacing may require a preventative maintenance coating, as determined and specified by the City Engineer. Asphalt coatings consist of chip seals with type A chips and a fog coat, type II slurries and seal coats (type specified by the City Engineer). All asphalt coatings (and their application) shall meet the applicable APWA Utah standards.

5b.08 Gravel Surface

Where trenches are excavated through gravel-surfaced areas such as roads and shoulders, parking areas, unpaved driveways, etc., the gravel surface shall be restored and maintained as follows:

A. The gravel shall be placed deep enough to provide a minimum of six inches of material.

B. The gravel shall be placed in the trench at the time it is backfilled. The surface shall be maintained by blading, sprinkling, rolling, adding gravel, etc., to maintain a safe, uniform surface. Excess material shall be removed from the premises immediately.

C. Material for use on gravel surfaces shall be obtained from sound, tough, durable gravel or rock meeting the following requirements for grading:

   Passing 1-inch sieve 100%
   Passing 1/2-inch sieve 79-91%
   Passing No. 4 sieve 49-61%
   Passing No. 16 sieve 27-35%
   Passing No. 200 sieve 7-11%

5b.09 Miscellaneous Improvements

It shall be the Developer's responsibility to restore to their original condition all irrigation canals, levees, culverts, gates, fences, drainage ditches, and all such improvements which are cut or disturbed during construction. Topsoil in farming areas or along road edges shall be stored separate from subsoil during pipe trench excavation. Topsoil shall be replaced during backfill operations as nearly as possible to its original condition, thereby assuring suitable soil for reseeding.

5b.10 Restoration Of Surfaces

Unless otherwise directed, all street surfacing, curbs, gutters, sidewalks, driveways, or other hard surface that must be removed in the performance of the work shall be restored in kind by the Developer in accordance with the Specifications contained herein. Deviation of more than 1/4-inch between old and new work or within new construction shall be corrected. Such measurement shall be made from a 10-foot minimum length straight edge. Adjoining surfaces between old and new must be flush.

5b.11 Cleanup

At the completion of each area of work all equipment, barricades, and similar items shall be removed from the area. All excess material will be removed. Adjacent borrow pits and road shoulders disturbed or used for storage of excavating materials will be smoothed and returned to its original contour.

5b.12 Pavement Markings

The Developer shall be responsible for restoration of pavement markings on all roadways. Restoration of pavement markings shall be provided for any removed or obliterated markings. The temporary markings shall conform to UDOT standards and specifications. Permanent pavement markings will then be replaced to conform to the applicable local and state specifications with approval from the City Engineer or their Representative.

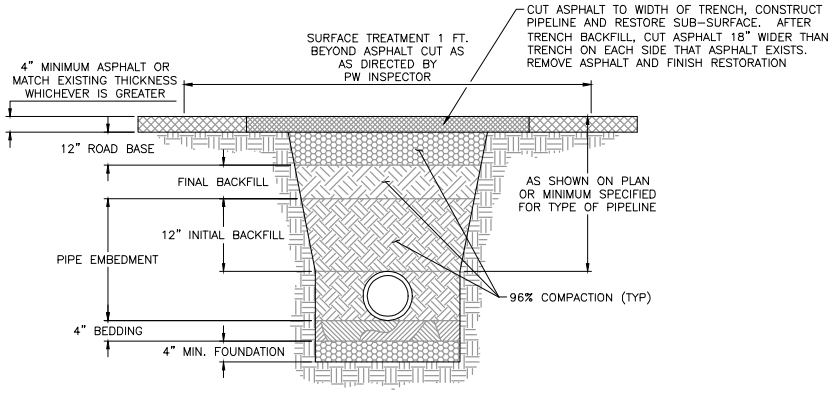

1 ASPHALT SURFACE
SCALE:N.T.S.

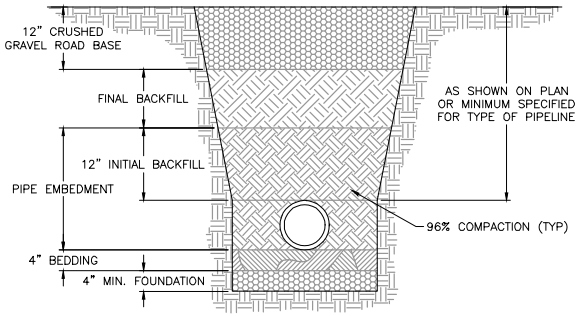

2 GRAVEL SURFACE
SCALE:N.T.S.

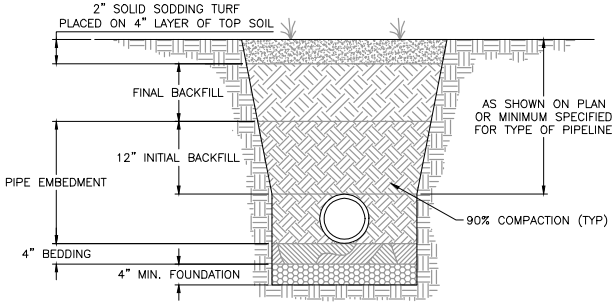

3 TURF SURFACE
SCALE:N.T.S.

NOTES:
1. SLOPE TRENCH TO MEET OSHA REQUIREMENTS (LATEST EDITION) OR USE TRENCH BOX.
2. FOUNDATION AND BEDDING MATERIAL AS REQUIRED.
3. INSTALL PIPELINES ON STABLE FOUNDATION WITH UNIFORM BEARING FOR FULL LENGTH OF BARREL, EXCAVATE IN BEDDING FOR ALL PIPE JOINTS.
4. IF GRAVEL MATERIAL IS USED FOR PIPE EMBEDMENT, FABRIC IS TO BE USED ON TOP OF GRAVEL BEFORE BACKFILLING TRENCH.
5. FOR POTHOLES: USE STATE SPEC. FLOWABLE FILL PER SECTION 03575 UDOT SPECS. UP TO ASPHALT GRADE AND THEN PAVE PROPER ASPHALT DEPTH
6. THE INDIVIDUAL RESPONSIBLE FOR THE COMPLETE REPAIR OF ALL ASPHALT SURFACES SHALL ALSO CRACK SEAL AND SURFACE TREATMENT THE ENTIRE EXCAVATED AREA AS DETERMINED BY KAYSVILLE CITY. ALL JOINTS SHALL BE CRACK SEALED PRIOR TO SLURRY SEAL. CRACK SEAL MUST BE INSPECTED BEFORE SLURRY SEAL IS APPLIED. SLURRY SEAL SHALL BE A TYPE 2 SLURRY WITH SAND.

TYPICAL TRENCH SECTIONS

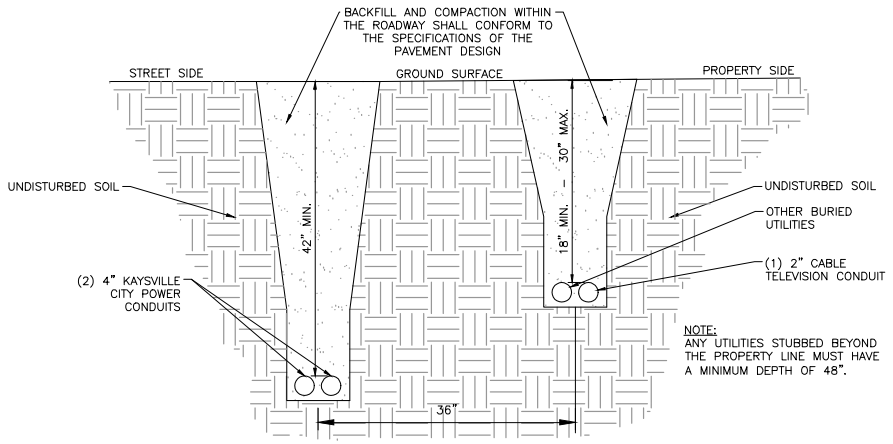

NOTE:
ANY UTILITIES STUBBED BEYOND THE PROPERTY LINE MUST HAVE A MINIMUM DEPTH OF 48".

POWER AND CABLE T.V. TRENCH SECTION

REUSE OF DRAWINGS
THIS DOCUMENT, AND THE IDEAS AND DESIGNS INCORPORATED HEREIN, AS AN INSTRUMENT OF PROFESSIONAL SERVICE, IS THE PROPERY OF J-U-B ENGINEERS, Inc, AND IS NOT TO BE USED IN WHOLE OR PART, FOR ANY OTHER PROJECT WITHOUT THE EXPRESS WRITTEN AUTHORIZATION OF J-U-B ENGINEERS, Inc.

NO.	REVISION DESCRIPTION	BY	APR.	DATE

FILE:
PROJ. #:
PLOT DATE: 2/11/2021
LAST UPDATED: 2/1/2021
DRAWN BY: KEF
DESIGN BY:
CHECKED BY:

Kaysville City

KAYSVILLE CITY CORPORATION
DEVELOPMENT STANDARDS

TYPICAL TRENCH SECTIONS

SHEET 16

Plot Date:2/11/2021 3:29 PM Plotted By: Mark Jenkins
Data Created 4/1/2020 J:\KAYSPUBLIC\PROJECTS\JUB\KAYSVILLE STANDARDS\CADD\16-TRENCH SECTIONS.DWG

DIVISION 2a TRENCH EXCAVATION AND BACKFILL
2a.01 General
2a.02 Barricades
2a.03 Blasting
2a.04 Sheeting, Bracing And Shoring Of Excavations
2a.05 Control Of Groundwater
2a.06 Trench Excavation
2a.07 Trench Backfill
2a.08 Trench Crossings And Easement
2a.09 Restoration Of Construction Site
2a.10 Developer's Responsibility
2a.11 Kaysville City Power And Light Underground Conduit Requirements

2a.01 General

This Division covers the requirements for trenching and backfilling for underground utilities. Unless otherwise directed by the City Engineer, pipe shall be laid in an open trench. All incidental clearing, preliminary grading, structure removal, and benching shall be considered a part of the trenching operation.

2a.02 Barricades

It is the Developer's responsibility to submit a traffic control plan to the City for approval at least 48-hours prior to digging, and shall not commence until City approval is received. Barriers shall be placed at each end of all excavations and at such places as may be necessary along excavations to warn all pedestrians and vehicular traffic of such excavations. Warning signs shall also be installed placed on both sides of overhead lines to warn workers, operators, truck drivers etc. of potential dangers. Lights or reflective barricades shall also be placed along excavations from one hour before sunset each day to one hour after sunrise of the next day until such excavations are entirely refilled, compacted, and surfaced or final graded. All excavations shall be barricaded in such a manner as to prevent persons from falling, walking, or otherwise entering any excavation in any street, roadway, parking lot, or any other area, public or private. Impacted residents, businesses or other parties shall be contacted no less than 24-hours prior to excavations that will impact utilities at or access to those properties.

2a.03 Blasting

Blasting will not be allowed except by permission from the City Engineer. The Developer shall comply with all laws, ordinances, and applicable safety code requirements and regulations relative to the handling, storage, and use of explosives and protection of life and property, and it shall be fully responsible for all damage attributable to its blasting operations. Excessive blasting or overshooting will not be permitted, and any material outside the authorized cross section which may be shattered or loosened by blasting shall be removed by the Developer.

2a.04 Sheeting, Bracing And Shoring Of Excavations

Excavations shall be sheeted, braced, and shored as required to support the walls of the excavations, to eliminate sliding and settling and as may be required to protect the workmen, the work in progress, and existing utilities, structures and improvements. All such sheeting, bracing, and shoring shall comply with the requirements of the Utah Labor Commission, Occupational Safety and Health Act (OSHA), and accident prevention and safety provisions of the contract.

The Developer shall be fully responsible for the adequacy of methods and materials used in trench sheeting, bracing, shoring, and/or other systems provided to protect workmen. Injury to or death of

workmen resulting from inadequate trench safety measures shall be the full and complete responsibility of the Developer.

All damages resulting from lack of adequate sheeting, bracing, and shoring shall be the responsibility of the Developer, and the Developer shall affect all necessary repairs or reconstruction at its own expense resulting from such damage.

Sheeting or shoring that does not extend below the centerline of the pipe may be removed at the discretion and responsibility of the Developer after the trench backfill has been placed and compacted to a level 12-inches above the top of the pipe. Following removal of the sheeting or bracing, the trench shall be immediately backfilled and compacted or consolidated.

2a.05 Control Of Groundwater

All trenches shall be kept free from water during excavation, fine grading, pipe laying and jointing, and pipe embedment operations. Where the trench bottom is mucky or otherwise unstable because of the presence of groundwater, and in all cases where the static groundwater is above the bottom of any trench or bell hole excavation, such groundwater shall be lowered to the extent necessary to keep the trench free from water and the trench bottom stable when the work within the trench is in progress. The discharge from excavation dewatering shall be conducted to natural drainage channels, gutters, or storm drains, in accordance with applicable water quality regulations and requirements. No sanitary sewer shall be used for disposal of trench water. If any evidence of contamination in the water based on olfactory or visual indication, cease excavation work until potential risks are evaluated. During evaluation, handle water as a contaminated material. Surface water shall be prevented from entering trenches.

2a.06 Trench Excavation

Excavation for pipelines shall follow the line and grade shown on the approved plans. Trenches shall be excavated to the depths and widths required to accommodate construction of the pipelines, as follows:

A. Authorized Over-Excavation:

   Excavation for trenches in ledge rock, cobble rock, stones, or other material unsatisfactory for pipe foundation shall extend to a depth of at least 6-inches below the bottom of the pipe. Where unstable earth or muck is encountered in the excavation at the grade of the pipe, a minimum of 12-inches below grade will be removed. Such over-excavation and placing imported special foundation material shall not be made except as directed by the City Engineer or their designee. Over-excavations not ordered, specified, or shown shall be handled the same as unauthorized over-excavation.

B. Unauthorized Over-Excavation:

   Where any unauthorized excavation is carried below the elevation required to install the pipe to the grade shown on the plans, specified in these specifications or directed by the City Engineer, the excavation shall be backfilled in accordance with these specifications for “Imported Granular Material” and “Gravel Foundation for Pipelines and Pipeline Structures,” all at the Developer’s expense.

C. Trench Width:

   The trench shall be excavated such that the pipe is always centered in the trench. The clear trench width at the horizontal diameter of the pipe must be equal to 18-inches on either side. If a trench is excavated to a greater width, the Developer will be required to restore the trench to an

acceptable condition by following the steps outlined in these specifications for “Trenches in Embankments.”

Trench width for pipeline structures, valves, or other accessories shall be sufficient to leave at least 12-inches clear between their outer surfaces and the trench. Backfill with native soil or excavated spoils under structures, pipes or valves will not be permitted. Any unauthorized excess excavation below the elevation indicated for foundation of any structures shall be backfilled in accordance with these specifications for “Imported Granular Materials,” and “Gravel Foundation Pipelines and Pipeline Structures,” all at the Developer’s expense.

D. Trenches in Embankments:

Before laying pipes that are to be in fill or embankment areas, the embankment shall first be placed and compacted to the specified density to a depth of not less than 2-feet above the top of the proposed pipe. After placing and compacting the embankment, the trench for the pipe or conduit shall be excavated through the fill and fine graded and the pipe installed as specified.

E. Placement of Excavated Material:

All excess excavated material not fit for use in construction shall be hauled away from the construction site and disposed of in an area obtained by the Developer. The Developer shall be responsible for all rights-of-way, easements, and access associated with the disposal of excess excavated material. It shall further be responsible to obtain permission from the property owner or person(s) controlling the property where the Developer plans to dispose of excavated material.

Otherwise, excavated material shall be piled in a manner that will not endanger the work, will avoid obstructing sidewalks, driveways and streets and will comply with all applicable water quality rules and regulations. Gutters and irrigation ditches shall allow for street drainage and continuity of irrigation.

Grading of the area surrounding the trenches, including excavated materials, shall be performed as necessary to prevent surface water from flowing into trenches, or other excavations. Control of groundwater shall be as specified herein.

F. Fine Grading the Trench Bottom:

The bottom of the Trench shall be accurately graded and prepared to provide uniform bearing and support on undisturbed soil or compacted gravel foundation at every point along the entire length of the pipe. Bell holes shall be hand excavated after the trench bottom has been fine graded. Bell holes shall be only large enough to permit making the joints and to assure that the pipe is not supported by any portion of the joint or bell.

2a.07 Trench Backfill

A. Imported Granular Material:

1. General. When the excavated materials are not satisfactory for pipe foundation, pipe bedding or backfill, as determined by the Engineer, the Developer shall provide imported granular material. Imported granular material for foundation, bedding and backfill shall be cleaned, crushed rock or gravel free from sod, vegetation and other organic or deleterious material. Slag will not be allowed in the pipe zone.

2. Gradation. Imported granular material shall conform to the following gradation specifications:

    a. Gravel Foundation Material:
    100% passing a 1-inch screen and 5% passing a ½-inch screen.

    b. Gravel Bedding Material:
    Ductile Iron or concrete pipe – 100% percent passing a 1-inch screen and 5% passing a No. 4 sieve.

    c. ↑PVC or polyethylene pipe:
    100% passing a ¾-inch screen and 5% passing a No. 4 sieve.

    d. Copper tubing:
    100% passing a ¾-inch screen and 5% passing a No. 4 sieve.

    e. Gravel Backfill Material:
    100% passing a 3-inch square sieve and 15% passing a 200 mesh sieve.

B. Gravel Foundation for Pipe and Pipeline Structures:

The Gravel foundation is defined as fill material below the bottom of the pipe, pipeline structure or accessory. Wherever the trench is excavated below the subgrade for the pipe, pipeline structure, or accessory the subgrade shall be replaced with crushed rock or gravel to an elevation sufficiently above the bottom of the pipe so that the trench can be properly fine graded as specified and the pipe will be true to line and grade. The gravel material shall be deposited over the entire trench width in layers. The layers shall have a maximum un-compacted thickness of 6-inches. The gravel material is to be compacted using vibratory equipment to 96% of the maximum index density of the material as determined by ASTM D4253 (Relative Density Test).

The material shall then be fine graded in accordance with the specification for Fine Grading herein.

C. Pipe Bedding:

Pipe bedding is fill material in the pipe zone. The pipe zone is defined as the area from the bottom of the pipe to 12-inches above the top of the pipe, or any area within 12-inches of any pipe, pipeline structure or accessory.

Excavated materials consisting of loose earth, sand or gravel having no material larger than 2-inches in any dimension, no greater than 1-inch in any dimension for PVC pipe or no greater than ½-inch for copper tubing may be considered for use as pipe bedding material. The City Engineer, or their designee, shall qualify excavated material for use as bedding.

If the excavated materials are not satisfactory, imported granular material as specified herein shall be used for pipe bedding. When gravel is used around pipe bedding, the Developer must place a fabric over gravel layer to keep fines from washing into gravel, creating a void. Fabric must be at least a 200-pound tensile strength woven ground stabilization fabric (in accordance with AASHTO M 288) and shall be installed on top of gravel prior to sand or road base placement.

After the pipe is in place, bedding material shall be placed at any point below the mid-point of the pipe simultaneously and uniformly on both sides of the pipe in uncompacted layers not to exceed 10-inches or 1/2 the diameter of the pipe, whichever is less. Bedding material shall be placed with care to prevent displacement of or damage to the pipe during the bedding process,

with each10-inch lift then compacted. Material shall be scattered alongside the pipe and not dropped into the trench in compact masses.

That section of the pipe zone from the mid-point of the pipe to 12-inches above the top of the pipe shall then be filled with bedding materials and compacted to the density required in these specifications for backfill in this section of the trench.

D. Trench Backfill:

The trench shall be backfilled from 12-inches above the top of the pipe to the natural surface level or the finished grade specified on the approved drawings. Excavated materials consisting of good sound earth, sand, and gravel may be used for backfill. No oil cake, asphalt, concrete, rocky, clay or other lumpy material may be used in the backfill. Perishable or spongy material shall not be used in backfilling. The City Engineer, or their designee, shall qualify excavated material for use as backfill.

Under pavements, shoulders or other surface improvements, the in-place density shall be a minimum of 96% of laboratory standard maximum dry density as determined by AASHTO T-180 (ASTM D1557). In shoulders and other areas the in-place density shall be a minimum of 90% of the maximum dry density as determined by AASHTO T-180 (ASTM D1557). The backfill in the trenches shall be either compacted or consolidated according to the requirements of the materials being placed.

Density and compaction testing shall be done at a frequency of one test per 200-feet of trench length.

E. Compaction of Backfill:

Backfill shall be compacted by means of sheepsfoot rollers, pneumatic tire rollers, vibrating rollers, or mechanical tampers. Where compaction methods are used, the material shall be placed at a moisture content and un-compacted lift thickness such that after compaction the required relative densities will be produced. In no event will the material be placed in lifts which, prior to compaction, exceed 12-inches.

Prior to compaction each layer shall be evenly spread, moistened, and worked by disk harrowing or other equivalent means.

If the required relative density is not attained, test sections will be required to determine any adjustments in compaction equipment, thickness of layers, moisture content, and compactive effort necessary to attain the specified minimum relative density.

Approval of equipment, thickness of layers, moisture content, and compactive effort shall not be deemed to relieve the Developer of the responsibility for attaining the specified minimum relative densities. The Developer, in planning its work, shall allow sufficient time to perform the work connected with test sections and to permit the City Engineer or their designee to make tests for relative densities.

F. Consolidation of Backfill:

Consolidation of backfill, when authorized by the City Engineer, shall be accomplished by those methods in which water is used as the essential agent to produce the desired condition of density and stability. Water shall be applied by jetting unless flooding is specifically authorized by the City Engineer. Authorization by the City Engineer to use any consolidation method does not relieve the Developer of their responsibility to meet the specified density requirements. Water for consolidation shall be furnished by the Developer at their expense.

In the jetting procedure the jets shall be inserted at not more than 4-foot intervals (staggered throughout the length of the backfilled area) and shall be slowly forced down to the bottom of the trench or to of the previously jetted lift and held until the trench backfill is completely saturated with water. Depth of a jetted lift shall not exceed 5-feet.

The minimum size of hose equipment shall be such as to provide a minimum pressure of 35-psi at the discharge. The jet shall be rigid iron pipe with a minimum diameter of 1-inch.

After the water-settled trench has set for several days, any depression in the trench shall be filled, mounded over and wheel rolled to compact the material thus placed.

All precautions necessary shall be taken by the Developer to prevent damage and movement (including floating) of the pipeline, structures, and existing adjacent improvements and utilities. The allowance of the use of consolidation methods shall not be construed as guaranteeing or implying that the use of such methods will not result in damage to the adjacent ground. The Developer shall make their own determination in this regard and shall assume all risks and liability for settlement or lateral movement of adjacent ground, or improvements, or utilities, either on the surface of the ground or underground.

2a.08 Trench Crossings And Easement

At road crossings or where existing driveways occur on a road, the Developer shall make provisions for trench crossings either by means of backfills, tunnels, or temporary bridges.

When excavating within easements, the Developer shall carefully remove all shrubs, fences, and other above ground items, carefully cut and remove any lawn sod and remove the topsoil for a depth of at least 12-inches (or the depth of the actual topsoil if less than 12-inches with the width of the lawn sod and/or topsoil removal being at least 2-feet wider (1-foot each side) than the excavated trench width and excavated material pile). The lawn sod and topsoil material shall be piled separately from and shall not be mixed with the remainder of the excavated material.

When working in already developed areas on private property the City Engineer may require that following completion of the backfilling and the compaction of the trench, the Developer shall replace topsoil, lawn sod, shrubs, fences, and other items that may have been removed from within the easement area and clean up and remove any rocks, dirt or any other debris that remain from the construction work. When required, the Developer shall obtain a release from the property owner stating that the repairs have been made to the satisfaction of the Owner. A copy of said release shall be delivered to the City Engineer.

2a.09 Restoration Of Construction Site

During the progress of the work, the Developer shall clean up all construction debris, excess excavation and construction materials, and shall restore all fences, irrigation structures, ditches, culverts, and similar items. The Developer shall stockpile the excavated trench material so as to do the least damage to adjacent grassed areas, or fences, regardless of whether these are on private property or public rights of way. All excavated materials shall be removed from grassed and planted areas and these surfaces shall be left in a condition equivalent to their original surface and free from all rocks, gravel, boulders, or other foreign materials.

2a.10 Developer's Responsibility

The Developer will be responsible to see that the backfilling, consolidation and compaction are properly and adequately done. Settlement of trenches within a period of 1-year after final acceptance of the project, shall be considered incontrovertible evidence of inadequate compaction, and the Developer

shall be responsible for correcting the condition in accordance with the provisions of these Specifications, including the replacement of the surface materials. The Developer is responsible to maintain and repair any problems caused by them to adjoining properties.

2a.11 Kaysville City Power And Light Underground Conduit Requirements

The Developer is responsible for installing conduit for road crossings. The properties should be marked and radius for corners marked and staked. A representative from Kaysville City Power and Light (Power) will mark crossing for the Developer. The Developer is required to dig a trench 4-feet deep and stub 8-feet from the back of curb for future tie-in of conduit. The Developer will seal both ends of conduit crossing with conduit seal.

Prior to the digging of the trench for the conduit system, the Developer will have curb and gutter in with property marks on curb and property stakes in back of properties. The Developer shall excavate a serviceable trench 4-feet deep and 13-feet from the center of trench to the back of curb, exposing the road crossing conduit for Power (offsets may vary depending on type of subdivision). A serviceable trench is one that is level, does not have sidewalls that are collapsing, and does not having ponding water. A representative from Power shall determine if a trench is serviceable or not, and shall require issues to be remedied before being accepted as serviceable.

Once the trench is deemed serviceable, Power will install the conduit, according to their availability. Power shall be the only utility allowed in this trench, and will be notified prior to any changes or if problems arise, and will be responsible to approve any changes prior to them being incorporated and/or made.

Backfilled trenches should have the center of the conduit, or conduit bundles, located 13-feet behind the curb. Material used for backfill of the trench must not pose a risk of damaging the conduit during placement, compaction or loading. If backfill material is not suitable, as determined by Power, sand may be required to “shade” the conduit to help protect it from damage before backfilling the trench. Any broken, damaged or defective conduit shall be excavated by the Developer and repaired by Power. Once any necessary repairs are made, the Developer will be responsible to then backfill and make any other necessary repairs to complete the work.

DIVISION 4a PVC PRESSURE PIPE
4a.01 General
4a.02 Materials
4a.03 Joints
4a.04 Fittings
4a.05 Polyethylene Wrapping
4a.06 Pipe Installation
4a.07 Flushing And Testing

4a.01 General

This Division covers furnishing and installing PVC pressure pipe (as part of the City drinking water distribution system) to the lines and grades shown on the approved drawings and/or established in the field, and all flushing, testing, and repairing required to ensure adequate and safe operation of the water system. Minimum pipe size for culinary water main line is 8-inch diameter, and 6-inch diameter for fire lines, unless otherwise shown and approved by City Engineer. For information regarding furnishing and installing irrigation PVC pressure pipe, please see the standard drawings and specifications of Haights Creek Irrigation, Davis and Weber Canal Company or Benchland Water, depending on the location.

4a.02 Materials

Pipe for the transmission and distribution of water shall be manufactured in accordance with ANSI/AWWA C900, "AWWA Standard for Polyvinyl Chloride (PVC) Pressure Pipe, 4-inch through 12-inch, for Water". The PVC pipe shall have a cast-iron-pipe-equivalent outside diameter. PVC pipe 14-inches and larger shall be manufactured in accordance with ANSI/AWWA C905, "AWWA Standard for Polyvinyl Chloride (PVC) Water Transmission Pipe, Nominal Diameters 14-inch through 36-inch." All PVC pipe 4-inch and larger shall be SDR 18 with a working pressure of 150-psi. Pipe smaller than 4-inch shall be Schedule 40 PVC. Culinary water pipe must be blue in color and secondary water pipe must be purple.

4a.03 Joints

Joints shall be push on rubber gasket type. Lubrication shall be water soluble, non-toxic, non-objectionable in taste and odor imparted to the water, non-supporting of bacteria growth, and have no deteriorating effect on the PVC pipe or rubber gaskets. It shall conform in every way to the National Sanitation Foundation NSF/ANSI Standard 61.

4a.04 Fittings

All fittings to be used with the PVC pipe shall be the same as fittings for Ductile Iron Pipe and shall conform to the provisions of ANSI/AWWA C110/A21.10 or C153/A21.53. Mechanical joints should be restrained. Megalug by EBAA Iron is the preferred mechanical joint restraint.

4a.05 Polyethylene Wrapping

All fittings for PVC pipe shall be wrapped as specified herein. All materials placed shall be wrapped with a polyethylene plastic wrap, including all fittings and valves, in accordance with the manufacturer's specifications.

All compression couplings, mechanical joints, flanged joints, and valves exposed to soil shall be wrapped with 8-mil thick polyethylene film adhesive tape equal to Polyken No. 900 or Scotchrap No. 50. The tape shall be installed to adhere securely to both the pipe and polyethylene. Enough film shall be used to overlap the adjoining pipe a minimum of 1 foot.

Valves shall be wrapped by bringing the wrap on the adjacent pipe over the bells of flanges of the valve and sealing with the adhesive tape. The valve bodies are then wrapped with a flat sheet of the film passed under the valve bottom and brought up around the body to the stem and fastened in place with the adhesive tape.

All fittings that require concrete blocking should be completely wrapped prior to pouring the concrete backing block.

Polyethylene wrap shall be protected from the sun and weathering prior to use. Care shall be exercised during backfilling of the protected areas to prevent puncturing the film.

4a.06 Pipe Installation

A. Cutting:

Cutting of pipe for closure pieces or for other reasons shall be done in a neat and workmanlike manner by a method recommended by the manufacturer. After cutting, the pipe shall be beveled and filed to prevent gasket damage in joint assembly.

B. Dewatering of Trench:

Where water is encountered in the trench, it shall be removed during pipe laying operations and the trench so maintained until the ends of the pipe are sealed. See "Control of Groundwater" in Division 2 Trench - Excavation and Backfill.

C. Laying of Pipe:

The pipe and pipe coating (where applicable) shall be inspected for defects before installation. Any defects shall be repaired or the pipe shall be replaced, whichever is deemed necessary by the City Engineer or Representative.

All pipes shall be laid and maintained to the required lines and grades with fittings and valves at the required locations. The pipes shall be installed with 48 inches to the top of the pipe minimum cover from finished road surface for culinary water. The Developer shall be responsible to install the pipe line to the alignment set by the City Engineer or Representative or as shown on the Drawings.

All pipes, fittings and valves shall be carefully lowered from the truck when unloading or when installing into the trench. This should be done one piece at a time in order to prevent damage to pipe materials and protective coatings and linings. Under no circumstances shall materials be dropped or dumped from the truck or into the trench.

The Developer shall take the necessary precautions such that foreign materials do not enter into the pipe. No debris, tools, or other materials shall be placed in the pipe during laying operations. When laying of pipe is not in progress, the pipe shall be closed by a water-tight plug.

Deflections in PVC pipe shall be made by longitudinal bending of the pipe barrel of the pipe rather than deflecting the pipe joints. Longitudinal bending shall be limited to eighty percent (80%) of that allowed by the manufacturer. This is accomplished by dividing the minimum recommended bending radius by 0.8.

All non-conductive drinking water pipes require a tracer wire (12 gauge) for locating purposes placed on top of the pipe and connected to the nearest fire hydrant, unless otherwise directed.

Where splices are to be made, a water tight splice kit must be used. The wire should be run from the mainline, to the nearest fire hydrant, and connected to an above ground access station (a blue Snakepit RB14-TP, or approved equal). See standard drawings for additional detail.

D. Pipe Bedding:

All pipes shall be protected from lateral displacement and possible damage resulting from impact or unbalanced loading during backfilling operations by being adequately bedded.

In the event trench materials are not, in the judgment of the City Engineer or Representative, satisfactory for pipe bedding, imported granular bedding will be required. See Division 2a of these specifications.

E. Thrust Blocking:

Thrust blocking shall be applied at all tees, valves, plugs, caps and at bends deflecting 11 1/4 degrees or more. The fitting shall be encased in a 12 mil protective plastic wrap before the thrust block is poured. Reaction blocking shall be concrete, having a compressive strength of not less than 3000 pounds per square inch at 28 days. Blocking shall be placed between undisturbed soil and the fitting to be anchored. The area of bearing on the pipe and on the ground shall be as shown in the Drawings. Restraint sizing is based upon a maximum operating pressure of 150 psi and a test pressure of 200 psi, and a minimum soil bearing stress of 2,000 psf.

The blocking shall be so placed that the pipe and the fittings will be accessible for repair. Prior to backfilling around thrust block, secure inspection of installation by City Engineer or Representative. Concrete must be allowed to cure in thrust restraints for 5 days prior to pressurizing water lines or have additional approved thrust restraints installed prior to pressurizing the water line.

F. Connections to Existing Water Lines:

Information on the drawings regarding existing water lines is taken from "record" drawings from the city or utility company files and may or may not be accurate as to size, type of material or location. The Developer will be responsible to determine the proper fittings and materials required, obtain the City Engineer's approval of the planned connection, and perform the construction in a suitable fashion.

G. Magnetic Locator Tape:

All pipe shall include a three inch (3”) magnetic locator tape installed in the pipeline trench approximately twenty four inches (24”) above the top of pipe. This tape shall be prepared for culinary water with white or black printing on a blue field having the words: POTABLE WATER.

This tape shall be prepared for secondary water with white or black printing on a purple field, color Panatone 512C, having the words: CAUTION: NONPOTABLE WATER - DO NOT DRINK.

4a.07 Flushing And Testing

A. Pressure Test:

A leakage test shall be conducted concurrently with the pressure test. After the pipe has been laid, all newly laid pipe or any valved section thereof shall be subjected to a hydrostatic pressure of at least 1.5 times the working pressure at the point of testing.

1. Test Pressure Restrictions:

   Test pressures shall:

   a. Not be less than 1.25 times working pressure at the highest point along the test section or a minimum of 200 psi.

   b. Not exceed pipe or thrust restraint design pressures.

   c. Be of at least 2-hour duration.

   d. Not vary by more than plus or minus five (± 5) psi for the duration of the test.

   e. Not exceed twice the rated pressure of the valves or hydrants when the pressure boundary of the test section includes closed gate valves or hydrants.

   f. Not exceed the rated pressure of the valves when the test boundary of the test section includes closed, resilient-seated gate valves or butterfly valves.

2. Pressurization:

   Each valved section of pipe shall be slowly filled with water and the specified test pressure, based on the elevation of the lowest point of the line or section under test and corrected to the elevation of the test gage, shall be applied by means of a pump connected to the pipe in a manner satisfactory to the City Engineer.

3. Air Removal:

   Before applying the specified test pressure, air shall be expelled completely from the pipe, valves, and hydrants. If permanent air vents are not located at all high points, the Developer shall install corporation cocks at such points so that the air can be expelled as the line is filled with water. After all the air has been expelled, the corporation cocks shall be closed and the test pressure applied. At the conclusion of the pressure test, the corporation cocks shall be removed and plugged.

4. Examination:

   All exposed pipe, fittings, valves, hydrants, and joints shall be examined carefully during the test. Any damaged or defective pipe, fittings, valves, or hydrants that are discovered following the pressure test shall be repaired or replaced with sound materials and the test shall be repeated until it is satisfactory to the Owner.

B. Leakage Test:

A leakage test shall be conducted concurrently with the pressure test.

1. Leakage Defined:

   Leakage shall be defined as the quantity of water that must be supplied into the newly laid pipe, or any valved section thereof, to maintain pressure within 5 psi of the specified test pressure after the air in the pipeline has been expelled and the pipe has been filled with water.

2. Allowable Leakage:

   No pipe installation will be accepted if the leakage is greater than that determined by the following formula:

$$L = \frac{SD(P)^{0.5}}{133,200}$$

in which L is the allowable leakage, in gallons per hour; S is the length of pipeline tested in feet; D is the nominal diameter of the pipe, in inches; and P is the average test pressure during the leakage test, in pounds per square inch gage.

a. Allowable leakage at various pressures is shown in Table 1.

b. When testing against closed metal-seated valves, an additional leakage per closed valve of 0.0078 gal/hr/in. of nominal valve size shall be allowed.

c. When hydrants are in the test section, the test shall be made against the closed hydrant.

TABLE 1
Allowable Leakage per 1000 ft of Pipeline - gph

Average Test Pressure psi (Bar)	Nominal Pipe Diameter—in.															
	3	4	6	8	10	12	14	16	18	20	24	30	36	42	48	54
450 (31)	0.48	0.64	0.95	1.27	1.59	1.91	2.23	2.55	2.87	3.18	3.82	4.78	5.73	6.69	7.64	8.60
400 (28)	0.45	0.60	0.90	1.20	1.50	1.80	2.10	2.40	2.70	3.00	3.60	4.50	5.41	6.31	7.21	8.11
350 (24)	0.42	0.56	0.84	1.12	1.40	1.69	1.98	2.25	2.53	2.81	3.37	4.21	5.06	5.90	6.74	7.58
300 (21)	0.39	0.52	0.78	1.04	1.30	1.56	1.82	2.08	2.34	2.60	3.12	3.90	4.68	5.46	6.24	7.02
275 (19)	0.37	0.50	0.75	1.00	1.24	1.49	1.74	1.99	2.24	2.49	2.99	3.73	4.48	5.23	5.98	6.72
250 (17)	0.36	0.47	0.71	0.95	1.19	1.42	1.66	1.90	2.14	2.37	2.85	3.56	4.27	4.99	5.70	6.41
225 (16)	0.34	0.45	0.68	0.90	1.13	1.35	1.58	1.80	2.03	2.25	2.70	3.38	4.05	4,73	5.41	6.03
200 (14)	0.32	0.43	0.64	0.85	1.06	1.28	1.48	1.70	1.91	2.12	2.55	3.19	3.82	4.46	5.09	5.73
175 (12)	0.30	0.40	0.59	0.80	0.99	1.19	1.39	1.59	1.79	1.98	2.38	2.98	3.58	4.17	4.77	5.36
150 (10)	0.28	0.37	0.55	0.74	0.92	1.10	1.29	1.47	1.66	1.84	2.21	2.76	3.31	3.86	4.41	4.97
125 (9)	0.25	0.34	0.50	0.67	0.84	1.01	1.18	1.34	1.51	1.68	2.01	2.52	3.02	3.53	4.03	4.53
100 (7)	0.23	0.30	0.45	0.60	0.75	0.90	1.05	1.20	1.35	1.50	1.80	2.25	2.70	3.15	3.60	4.05

*If the pipeline under test contains sections of various diameters, the allowable leakage will be the sum of the computed leakage for each size.
**To obtain leakage in liters/hour, multiply the values in the table by 3.785.

3. Acceptance of Installation:

Acceptance shall be determined on the basis of allowable leakage. If any test of pipe laid discloses leakage greater than specified, the Developer shall, at its own expense, locate and repair the defective material until the leakage is within the specified allowance. All visible leaks are to be repaired regardless of the amount of leakage.

C. Flushing:

All new water systems or extensions to existing systems shall be thoroughly flushed before being placed in service. Flushing shall be accomplished through hydrants, or end of line blow-off assemblies at a minimum flushing velocity of 2.5-feet per second.

FLOW RATE AND OPENINGS TO FLUSH PIPELINES (40-psi Residual Pressure)	
Pipe Size (inches)	Flow Required to Produce 2.5 fps velocity (gpm)
2	26
4	100
6	220
8	390
10	610
12	880
14	1,200
16	1,565
18	1,980
20	2,450
24	3,525
30	5,507

D. Disinfection:

After flushing, all culinary water lines shall be disinfected by chlorination. Chlorination shall provide a minimum of 25-ppm residual after 24-hours contact in the pipeline. This may be expected with an application of 50-ppm, although some conditions may require more. Chlorine in the form of a 1% slurry of high-test calcium hypochlorite (T-Chlor, HTH, Perchloron, Pittchlor, etc. which are 70% available chlorine by weight) shall be fed into the pipeline in such a manner as to mix with the water flowing in the pipeline. (A 1% slurry – 10,000 ppm – results from mixing one pound of calcium hypochlorite with 8.40 gallons of water.)

The following table provides information as to the required quantity of slurry to be used per 100 feet of pipe to provide a chlorine concentration of 50 ppm:

Pipe Size (in.)	Vol. of 100 ft. Length (gal)	Required Amount of 1% Chlorine Slurry (gal)
1 1/2	9.18	0.07
2	16.32	0.12
2 1/2	25.50	0.18
3	36.73	0.26
4	65.28	0.47
6	146.90	1.05
8	261.10	1.87
10	408.10	2.92
12	587.60	4.20

During the process of chlorinating the pipeline, all valves and other pipeline appurtenances shall be operated several times to provide sufficient contact with the chlorinating agent. Following chlorination, the water line shall be drained and thoroughly flushed according to Section A above and, if necessary, rechlorinated until a satisfactory bacteriological test is obtained. After passing a bacterialogical test, water must be flushed from the pipe and discharged in accordance with all local, state and federal water quality requirements.

Disinfection shall conform to the requirements of AWWA C651 (or latest edition). Main lines must pass bacterialogical test. Number of samples to be determined by inspector and will be based on the size of the development. If a new main is connected to an existing main, a bacteria test must be completed and passed prior to any pressure testing being conducted.

DIVISION 4d WATER SERVICE LATERALS

4d.01 General
4d.02 Water Service Laterals

4d.01 General

Water service laterals shall be constructed with materials specified and at the locations shown on the Drawings or at the actual location established during construction by the City Engineer or representative. The City shall maintain the service lateral from the main line to the end of the meter setter; the service lateral between the end of the meter setter and the property is to be maintained by the property owner.

4d.02 Water Service Laterals

Pipe for water service laterals shall be 3/4-inch Type K-soft copper tubing or blue HDPE SDR 9 Copper Tube Size (CTS) with a 200-psi rating.

A. Extent of Laterals:

Water service laterals shall extend from the water main to a point 10-feet beyond the street right-of-way line. A curb stop valve shall be installed on the end of the line. Type K-soft copper tubing water services shall not have any joints between the corporation stop and the meter setter. A 2-inch by 4-inch by 6-foot marker, with the top 12-inches painted blue, shall be installed to clearly mark the end of each lateral line. Tracer wire (12 gauge) shall be installed from the main to the end of each lateral line, and come up the outside of each meter box, and come into the meter box in a notch between the meter ring and the box. Meter boxes shall be installed in accordance with the Kaysville City standard drawings.

B. Excavation and Backfill:

Trench excavation and backfill shall conform to the applicable paragraphs of Division 2a. Bedding shall meet the requirement of Division 2a for PVC or polyethylene pipe.

C. Connection to Main:

Connections to the main lines shall be made by means of corporation stops using direct pipe taps for 3/4-inch and 1-inch services on Ductile Iron pipe, tapped tees for 2-inch service or approved service saddles for PVC and any of the above. HDPE fused saddles should be Frialen 10-inch to 20-inch universal service saddle with 2-inch female threaded outlet or equivalent.

D. Service Saddle Specifications:

(For use with AWWA C-900 CI O.D. for PVC plastic pipe.)

All service clamps shall be a “Full encirclement design”, and shall be O.D. controlled, which design will eliminate the possibility of pipe crushing due to the over torquing of the nuts upon installation.

All service clamps shall be manufactured of brass cast in conformance to AWWA C800, General Section – 1, Paragraph 1.2 (ASTM B62).

The two sides of the clamp shall be held together by high quality Silicon Bronze Hex Bolts (in sizes 1-inch and over) or Silicon Bronze Slotted Screws (in sizes under 1-inch), no dissimilar metals shall be allowed at this point thus eliminating the possibility of galvanic corrosion.

All service clamps shall be Mueller Model H-13490 Series, or Ford Model S-91 Series for sizes through 12-inch and Romac 305 Series for 14-inch or larger.

(For use with Ductile Iron Pipe.)

All service clamps shall be of the double strap design with brass body, flattened silicon bronze straps, rolled strap threads and O-ring sealed outlet. Saddles shall meet all applicable parts of ANSI/AWWA C-800.

All service clamps shall be Mueller Model H-16000 Series or approved equal.

Sample Stations:

The City may require an above ground sample station for water quality testing (Eclipse 88 type or approved equal). When required, sample stations shall be installed at a depth of 3 to 4-feet, and in accordance with the Kaysville City standard drawings. Sample station locations shall be determined by the City Engineer.

The line from the main to the sample station shall be subject to the same requirements as a service lateral.

E. Corporation Stops:

Connections of services to main lines shall be through a corporation type stop and a 24-inch gooseneck formed with copper tube. Inlet connection shall be a AWWA I.P. thread and the outlet shall be a compression fitting. Ford or Mueller are the approved manufacturers.

All connection made to pressurized water lines shall be done using a “wet-tap” method.

F. Service Tubing:

Water service lines from the main to the meter box shall be 3/4-inch, 1-inch, or 2-inch type K-soft copper tube or blue HDPE SDR 9 Copper Tube Size (CTS) with a 200-psi rating.

When transferring or replacing existing galvanized steel or plastic services, copper replacement tubing or blue HDPE shall be used, as detailed above.

All tubing for service lines shall be cut and installed in a neat and workmanlike manner by use of a wheel cutter.

G. Compression Connections:

1. The interior surface of the coupling nut, including threads, shall have a baked on, fluorocarbon coating to reduce assembly friction and prevent the gasket from turning and twisting during tightening. The nut shall bottom on a cast or machined shoulder on the body when properly assembled. This design will provide a visual check to assure connection is properly assembled.
2. The sealing gasket shall be of molded synthetic rubber (ASTM D-2000) with molded in place bronze spring (ASTM A-134 Alloy #6) to eliminate the possible cold flow of the gasket between the pipe and fitting.
3. A gripper band of hardened Stainless Steel (ANSI Type 401) shall be fitted into the gasket. When the gasket is compressed it will cause the gripper ring to distort the pipe giving the fitting a high resistance to pull out. The gripper band shall overlap itself to prevent cold flow of the gasket into the cavity under the band.

4. Compression connections and fittings shall be Mueller 110 or equal.

H. Flushing, Testing, and Disinfection:

Flushing, testing and disinfection shall be done at the time the water main is flushed, tested and disinfected. The end of the trench where the curb valve is located shall be left open to allow for discharging water out of the service line for proper flushing and to insure that the line has been adequately disinfected. Flushing, testing and disinfection shall conform to the applicable paragraphs of Division 4a or 4b.

I. Damage and Repair of Water Mains and Appurtenances:

The Developer shall be responsible for any damage to water mains and water facilities caused by their operations.

Any damage to water gates, hydrants, valve chambers, and other surface appurtenances which result from the Developer's operation shall be their sole responsibility.

SECTION 31 11 00
SITE CLEARING

PART 1 GENERAL

1.1 SECTION INCLUDES

A. Removal of trees, stumps, roots, and tree debris.

B. Clearing site of plant life, root systems and shrubs.

C. Removal of fences, fence posts, mail box posts, and miscellany.

1.2 REFERENCES

A. **NAA Standards**:

Pruning Standards for Shade Trees.

B. **Utah Shade Tree Pruning Standards**.

1.3 QUALITY ASSURANCE

A. Provide at least one person, who is familiar with NAA pruning standards for the type of tree involved, to be present during tree pruning operations.

1.4 SITE CONDITIONS

A. Repair or replace damaged trees and shrubs at no additional cost to OWNER.

1.5 PROTECTION

A. Protect roots and branches of trees to remain.

B. Construct temporary barricading at tree's approximated drip line. Place continuous barricades at least three (3) feet high.

C. When setting posts, avoid damaging tree roots.

D. Do not permit heavy equipment or stockpiling of materials or debris within the barricaded area, or permit earth surface to be changed.

E. Provide water and fertilizer to maintain existing trees.

PART 2 PRODUCTS

2.1 STUMP TREATMENT SOLUTION

A. Formulated to kill existing vegetation.

PART 3 EXECUTION

3.1 EXAMINATION

A. The drawings do not purport to show all trees and shrubs existing on site.

B. Verify with ENGINEER which plantings are to be removed or to remain.

C. Tree root inspection:

1. Assist ENGINEER by removing and replacing existing surface improvements.
2. Cost of removals and replacements will be paid for using existing payment prices, or if none, then by using contract Modification prices.

3.2 PREPARATION

A. Locate utilities. Preserve utilities that are to remain in service, Section 31 23 16.

B. Review work procedures with ENGINEER.

C. Schedule work carefully with consideration for property owners and general public.

D. Before starting, arrange for disconnection of all utility services that are to be removed or which interfere with work.

3.3 SITE CLEARING

A. Remove all vegetation outside of excavation, fill slope lines, and limits of slope rounding.

B. Remove fences, posts, appurtenances, and miscellaneous objects.

3.4 TREE REMOVAL

A. Remove branches, limbs, and debris.

B. Remove stumps and roots to 18 inches below proposed grade.

C. For stumps larger than six (6) inches caliper remove and treat as follows:

1. Remove chips and debris from around remaining stump.
2. Apply stump treatment solution in accordance with manufacturer's recommendations.
3. Do not allow chemical solution to mist, drip, drift, or splash onto adjacent ground surfaces or desirable vegetation.
4. Replace any existing vegetation damaged or killed through improper use of chemical at no additional cost to OWNER.

END OF SECTION

SECTION 31 23 16
EXCAVATION

PART 1 GENERAL

1.1 SECTION INCLUDES

A. Excavation and disposal of excavated materials.

B. Protection of existing facilities such as utilities, vegetation, structures affected by excavation, etc.

1.2 PAYMENT PROCEDURES

A. No Contract Time extension shall be granted and no additional compensation shall be made if buried utilities or structures that conflict with the Work have not been found by Keyholing.

B. Perform Incidental Excavation at no additional cost to OWNER.

1.3 DEFINITIONS

A. **Authorized Over Excavation**: Upper limit of excavation is proposed excavation limit. Lower and lateral limits are as authorized by ENGINEER.

B. **Classified Excavation**: The excavation of specified materials.

C. **Incidental Excavation**: Excavation done for CONTRACTOR's benefit, excavation error, dewatering of excavation, slough, or over-break.

D. **Unclassified Excavation**: The excavation of all materials encountered regardless of the nature, size, or manner in which they are removed. Presence of isolated boulders or rock fragments will not be sufficient cause to change classification of surrounding materials.

E. **Keyholing**: The process of making a small, precisely controlled hole for "day-lighting", or uncovering and exposing underground utilities, in order to locate or inspect them.

1.4 STORAGE AND HANDLING

A. Stockpile excavated material to cause minimum inconvenience to public and provide for emergency services as necessary.

B. Provide free access to existing fire hydrants, water valves, gas valves, and meters.

C.P rovide free flow of storm water in all gutters, conduits, and natural water courses.

D. Utilize traffic control signs, markers, and procedures in product storage and handling activities.

E. Promptly remove other material from site.

PART 2 PRODUCTS

2.1 BACKFILL MATERIALS

A. Common fill, Section 31 05 13.

B. Aggregate base course, Section 32 11 23.

C. Stabilization fill, aggregate base course or common fill with maximum rectilinear particle size of two (2) inches.

D. Stabilization fabric, Section 31 05 19.

PART 3 EXECUTION

3.1 PREPARATION

A. Photograph existing surfaces where work will take place to document conditions before excavation, Section 01 78 39.

B. Use white paint and mark the proposed excavation.

C. Call the one-call center and wait the required amount of time. Colors of one call center marks indicate the following:

White	Proposed excavation
Red	Electric power lines, cables, conduit and lighting cables
Yellow	Gas, oil, steam, petroleum or gaseous materials.
Orange	Communications, alarm, signal, cables or conduits.
Blue	Potable water.
Purple	Reclaimed water, irrigation and slurry lines.
Green	Sewer and storm drain lines.
Pink	Temporary survey markings.

D. Implement traffic control plan requirements, Section 01 55 26.

E. For temporary controls, refer to Section 01 57 00.

3.2 PROTECTION

A. Identify required lines, grades, contours, and benchmarks, Section 01 71 23.

B. Utilities:

1. Keyhole, expose or otherwise locate utilities as necessary to give utility agency at least one (1) day notice to protect, preserve, or relocate a utility that may interfere with or may be damaged by excavation work. Perserve utilities that remain in service.

2. Where utilities or structures conflict with design grades, report conflict to appropriate utility company and ENGINEER 14 days before initiating work within the conflict area.

C. Support and protect from damage any existing facility and structure that

exists in, passes through, or passes under the site.

D. Protect existing landscape sprinkler systems. When sprinkler system disturbance is required, interrupt and repair system so operation of system is maintained, Section 02 41 13.

E. Carefully remove soil around tree roots so ENGINEER can assess stability and health of tree.

3.3 GENERAL EXCAVATION REQUIREMENTS

A. Excavate topsoil from areas to be relandscaped or regraded and other marked areas.

B. Excavate site to line and grade indicated. Legally dispose of excavated material.

C. Carefully excavate soils in vicinity of buried utility marks placed by the one-call center.

D. Where soil has been softened or eroded by flooding or hardened by drying, rework all damaged areas or replace with approved material at no additional cost to OWNER.

E. Notify ENGINEER of unexpected subsurface conditions.

F. Underpin adjacent structure, service utilities and pipe chases that may be damaged by excavation work.

G. Protect excavation walls as required. If conditions permit, slope excavation sides to maintain a safe and clean working area. Remove loose materials.

H. Where ENGINEER deems subgrade material to be susceptible to frost heave or otherwise unsatisfactory, excavate additional depth.

3.4 TOPSOIL

A. Excavate topsoil only to depth that will preserve topsoil quality.

B. Do not mix topsoil with subsoil during stockpiling or spreading.

3.5 SHORING

A. Slope, shore, sheet, brace or otherwise support excavations over four (4) feet deep, Section 31 41 00.

B. When soil conditions are unstable, excavations shallower than four (4) feet deep must also be sloped, supported or shored.

3.6 DEWATERING

A. Keep excavation free from surface and ground water.

B. If ground water is in the intended construction operations, dewater excavations.

C. If there are no olfactory or visual indications of contamination in the water, discharge according to requirements of Federal, State or local agency having jurisdiction.

D. If any evidence of contamination in the water, based on olfactory or visual indications, cease excavation work until potential risks are evaluated. During evaluation, handle water as a contaminated material.

E. Pay for damages and costs resulting from dewatering operations.

3.7 ROADWAY EXCAVATION

A. In advance of setting line and grade stakes, clear and grub area of brush, weeds, vegetation, grass, and debris. Drain all depressions or ruts.

B. Roadway excavation is Unclassified Excavation. It includes Portland cement concrete or bituminous concrete pavement removal and removal of any aggregate base or sub-base material to line and grade established by Drawings or ENGINEER.

3.8 STRUCTURAL AND LANDSCAPE EXCAVATION

A. Provide shoring, cribs, cofferdams, caissons, pumping, bailing, draining, sheathing, bracing, and related items.

B. For piling work, coordinate special requirements for piling. Protect excavation walls.

C. If conditions permit, slope excavation sides as excavation progress. Maintain a safe and clean working area.

D. Support excavations. Do not interfere with the bearing of adjacent foundations, pipelines, etc.

3.9 TRENCH EXCAVATION

A. Grade bottom of trenches to provide uniform bearing surface.

B. If necessary, make bell holes and depressions required for laying and joining pipe or box.

C. Limit width of trench excavations to the dimensions suitable for worker access per pipe manufacturer's recommendation. Provide enough space for compaction equipment. Notify ENGINEER if excavation operations exceed any indicated line and grade limits.

D. In roadways and regardless of trench depth, limit length of open trenches to 200 lineal feet day or night. Provide barricading, Section 01 55 26. Protect trenches over night.

3.10 STABILIZATION EXCAVATION

A. Perform stabilization excavation as Incidental Excavation.

3.11 AUTHORIZED OVER EXCAVATION

A. Over excavation must be permited by ENGINEER to be classified as authorized over excavation. Volume will be determined by the method of average-end-areas in the original position.

3.12 TOLERANCE

A. Grading: Top surface of Subgrade = plus or minus 1 inch.

END OF SECTION

SECTION 31 23 17
ROCK REMOVAL

PART 1 GENERAL

1.1 SECTION INCLUDES

A. Requirements for Rock removal and use of explosives to assist in Rock removal.

1.2 REFERENCES

A. **NFPA Standards**:

495 Manufacture, Transportation, Storage, and Use of Explosive Materials.

1.3 DEFINITIONS

A. **Rock**: Solid mineral material that cannot be removed with equipment reasonably expected to be used in the Work without cutting, drilling or blasting.

1.4 SUBMITTALS

A. Submit proposed method of blasting, delay pattern, explosive types, type of blasting mat cover, and intended Rock recovery method.

B. Submit photographs of existing site conditions and facilities in vicinity of Work before blasting. Refer to construction photographic requirements, Section 01 78 39.

1.5 QUALITY ASSURANCE

A. Seismic Survey Firm: Company specializing in seismic surveys with two (2) years documented experience.

B. Explosive Firm: Company specializing in explosives for disintegration of Rock with 2 years documented experience.

PART 2 PRODUCTS

2.1 EXPLOSIVES

A. Type recommended by explosives firm following seismic survey and required by authorities having jurisdiction.

2.2 DELAY DEVICES

A. Type recommended by explosives firm.

2.3 BLASTING MAT MATERIALS

A. Type recommended by explosives firm.

PART 3 EXECUTION

3.1 PREPARATION

A. Verify site conditions and note irregularities affecting work of this Section.

B. Obtain permits from authorities having jurisdiction before explosives are brought to site or drilling is started.

C. Locate and preserve utilities, Section 31 23 16.

D. Beginning work of this Section constitutes acceptance of existing conditions.

E. Comply with NFPA 495.

3.2 STORAGE OF BLASTING MATERIALS

A. Securely store all explosives in compliance with Laws and Regulations.

B. Mark all storage places clearly.

C. Where no local Laws or Regulations apply, provide storage not closer than 1,000 feet from any road, building, camping area or place of human occupancy.

3.3 ROCK REMOVAL - NONEXPLOSIVE METHOD

A. Cut away Rock at excavation bottom to form level bearing.

B. Remove shaled layers to provide sound and unshattered base for foundations.

C. Remove and legally dispose of excess excavated material and debris off-site unless indicated otherwise.

D. Correct unauthorized Rock removal at no additional cost to OWNER.

3.4 ROCK REMOVAL - EXPLOSIVE METHOD

A. Provide a qualified explosives expert to act as an advisor and consultant during drilling and blasting operations.

B. Advise owners of adjacent buildings or structures and utility companies in writing before setting up seismographs. Describe blasting and seismic operations.

C. Obtain and pay for a seismic survey before Rock excavation to determine maximum charges that can be used at different locations in area of excavation without damaging adjacent properties and utilities.

D. Provide seismograph monitoring during progress of blasting operations.

E. Disintegrate and remove Rock from excavation operations.

END OF SECTION

SECTION 31 23 23
BACKFILLING FOR STRUCTURES

PART 1 GENERAL

1.1 SECTION INCLUDES

A. Structural backfill materials.

B. Structural backfilling requirements.

1.2 REFERENCES

A. **ASTM Standards**:

D698 Laboratory Compaction Characteristics of Soil Using Standard Effort (12,400 ft-lbf/ft^3 (600 kN-m/m^3)).

D1557 Standard Test Methods for Laboratory Compaction Characteristics of Soil using Modified Effort (56,000 ft-lbf/ft^3 (2,700 kN-m/m^3)).

D2922 Density of Soil and Soil-Aggregate in Place by Nuclear Methods (Shallow Depth).

D4832 Preparation and Testing of Soil-Cement Slurry Test Cylinders.

1.3 SUBMITTALS

A. Submit maximum laboratory dry density and optimum laboratory moisture content for:

1. Subgrade material, and
2. Each type of fill to be used.

1.4 QUALITY ASSURANCE

A. Do not change material sources, or aggregate without ENGINEER's knowledge.

B. Reject backfill material that does not comply with requirements specified in this Section.

C. If requested, submit a written quality control inspections and testing report describing source and field quality control activities performed by CONTRACTOR and Suppliers.

1.5 STORAGE

A. Safely stockpile backfill materials.

B. Separate differing materials, prevent mixing, and maintain optimum moisture content of backfill materials.

1.6 SITE CONDITIONS

A. Do not place, spread, or roll any backfill material over material that is damaged by water. Remove and replace damaged material at no additional cost to OWNER.

B. Control erosion. Keep area free of trash and debris. Repair settled, eroded, and rutted areas.

C. Reshape and compact damaged structural section to required density.

1.7 ACCEPTANCE

A. **General**: Native material may be wasted if there is no additional cost to substitute material acceptable to ENGINEER.

B. **Material**: For material acceptance refer to:

1. Common fill, Section 31 05 13.
2. Aggregate base course, Section 32 11 23.
3. Cement treated fill, Section 31 05 15.

C. **Lift thickness**: One test per Lot.

D. **Compaction**: One test per Lot. Verify compaction using nuclear tests, ASTM D2922. Density and lot sizes as follows:

Table 1 – Density and Lot Sizes

Structure Type	Density	Proctor	Lot Size
Strip Footings	95	Standard	Subgrade: 200 linear feet
	98	Modified	Aggregate base course: 200 linear feet per lift.
Structure Footing excluding strip footings	95	Standard	Subgrade: 225 square feet.
	98	Modified	Aggregate base course: Each 225 square feet per lift
Embankments	95	Standard	Fill: 625 square feet per lift
Interior Slab on Grade	98	Modified	Aggregate base course: 625 square feet
Side of Foundation Walls and Retaining Walls	95	Standard	Exterior:
	98	Modified	Interior
Miscellaneous small structures (e.g. Manholes, drainage boxes, etc.)	95	Standard	Subgrade: Each footprint area Fill: Each lift
	98	Modified	Aggregate base course: Each lift

NOTES
(a) Standard proctor, ASTM D698.
(b) Modified proctor, ASTM D1557.

E. **Flowable Fill Strength**: Lot size is one day production with sub-lots of 250 cubic yards or part thereof. Verify strength using cylinders, ASTM D4832.

F. **Grade, Cross Slope**: Measured at random locations.

1.8 **WARRANTY**

A. Repair settlement damage at no additional cost to OWNER.

PART 2 PRODUCTS

2.1 **BACKFILL MATERIALS**

A. Common fill, Section 31 05 13. Granular material, CONTRACTOR's choice.

B. Aggregate base course, Section 32 11 23. Untreated base course.

C. Cement treated fill, Section 31 05 15. Use a flowable fill so vibration is not required.

2.2 **WATER**

A. Make arrangements for sources of water during construction and make arrangements for delivery of water to site.

B. Comply with local Laws and Regulations at no additional cost to OWNER when securing water from water utility company.

PART 3 EXECUTION

3.1 **PREPARATION**

A. Implement traffic control plan requirements, Section 01 55 26.

B. Verify:

1. Backfill material meets gradation requirements.
2. Foundation walls are braced to support surcharge forces imposed by backfilling operations, areas to be backfilled are free of debris, snow, ice or water.
3. Ground surface is not frozen.

C If ground water is in the intended backfill zone, dewater.

3.2 **PROTECTION**

A. Protect existing trees, shrubs, lawns, structures, fences, roads, sidewalks, pavings, curb and gutter and other features.

B. Protect above or below grade utilities. Contact utility companies to repair utility damage. Pay all cost of repairs.

C. Avoid displacement of and damage to existing installations while compacting or operating equipment. Do not fill adjacent to structures until excavation is checked by ENGINEER.

D. Do not use compaction equipment adjacent to walls or retaining walls that may cause wall to become over-stressed or moved from alignment.

E. Do not disturb or damage foundation perimeter drainage, foundation, damp-proofing, foundation waterproofing and protective cover, or utilities in trenches. Movement of construction machinery over work at any stage of construction is solely at CONTRACTOR's risk.

F. Restore any damaged structure to its original strength and condition.

3.3 LAYOUT

A. Identify required line, levels, contours, and datum.

B. Stake and flag locations of underground utilities.

C. Upon discovery of unknown utility or concealed conditions, notify ENGINEER.

D. Maintain all benchmarks, control monuments and stakes, whether newly established by surveyor or previously existing. Protect from damage and dislocation.

E. If discrepancy is found between Contract Documents and site, ENGINEER shall make such minor adjustments in the Work as necessary to accomplish the intent of Contract Documents without increasing the Cost of the Work to CONTRACTOR or OWNER.

3.4 SUBGRADE

A. Protect Subgrade from desiccation, flooding, and freezing.

B. Before backfilling over Subgrade, get ENGINEER's inspection of subgrade surface preparations.

C. If Subgrade is not readily compactable get ENGINEER’s permission to stabilize the subgrade.

3.5 FOUNDATIONS AND SLABS ON GRADE

A. Lift thickness before compaction is eight (8) inches.

B. Do not backfill against walls until concrete has obtained 14 days strength. Backfill against foundation walls simultaneously on each side.

C. Fill unauthorized excavations with material acceptable to ENGINEER at no additional cost to OWNER.

D. Do not damage adjacent structures or service lines.

E. Where flowable fill is used, use fill that flows easily and vibration for compaction is not required.

3.6 MODIFIED BACKFILL LAYER METHOD

A. Section 33 05 20.

3.7 TOLERANCES

A. Compaction: Ninety-five (95) percent or ninety eight (98) percent minimum relative to a standard or modified proctor density, Section 31 23 26.

B. Lift Thickness (before compaction):

1. Eight (8) inches when using riding compaction equipment.
2. Six (6) inches when using hand held compaction equipment.
3. As proven in the modified backfill layer method, Section 33 05 20.

C. Cement Treated Fill: Compressive strength targets are 60 psi in 28 days and 90 psi maximum in 28 days.

3.8 CLEANING

A. Remove stockpiles from site. Grade site surface to prevent free standing surface water.

B. Leave borrow areas clean and neat.

END OF SECTION

SECTION 31 23 26
COMPACTION

PART 1 GENERAL

1.1 SECTION INCLUDES

A. Compaction of granular fill materials.

1.2 REFERENCES

A. **ASTM Standards**:

D698	Laboratory Compaction Characteristics of Soil Using Standard Effort (12,400 ft-lbf/ft^3 (600 kN-m/m^3)).
D1557	Standard Test Methods for Laboratory Compaction Characteristics of Soil Using Modified Effort (56,000 ft-lbf/ft^3 (2,700 kN-m/m^3))
D2216	Laboratory Determination of Water (Moisture) Content of Soil and Rock.
D2922	Density of Soil and Soil-Aggregate in Place by Nuclear Methods (Shallow Depth).
D3017	Water Content of Soil and Rock in Place by Nuclear Methods (Shallow Depth).
D3282	Classification of Soils and Soil-Aggregate Mixtures for Highway Construction Purposes.
D3740	Minimum Requirements for Agencies Engaged in the Testing and/or Inspection of Soil and Rock as Used in Engineering Design and Construction.

1.3 DEFINITIONS

A. **A-1 Soil**: Defined in ASTM D3282.

B. **Modified Proctor Density**: The maximum laboratory density, as defined in and determined by ASTM D1557 using procedure A, B or C as applicable.

C. **Relative Density (or Relative Compaction):** The ratio of field dry density to the maximum laboratory density expressed as a percentage.

D. **Standard Proctor Density**: The maximum laboratory density, as defined in and determined by ASTM D698 using procedure A, B or C as applicable.

1.4 QUALITY ASSURANCE

A. Use a soil and rock laboratory that complies with ASTM D3740.

PART 2 PRODUCTS Not Used

PART 3 EXECUTION

3.1 COMPACTION

A. Moisten or dewater backfill material to obtain optimum moisture for compaction.

B. When no density compactive effort is specified, compact the entire area to 95 percent and eliminate unstable zones.

C. Correct deficient compaction conditions. Replace or repair materials and damaged facilities.

3.2 FIELD QUALITY CONTROL

A. **Testing**: Perform control testing of materials. Perform additional testing at no additional cost to OWNER, for

1. Changes in source of materials or proportions requested by CONTRACTOR, or
2. Failure of materials to meet specification requirements, or
3. Other testing services needed or required by CONTRACTOR.

B. **Optimum Soil Density**: Use ASTM D2216 and the following industry standards.

1. For A-1 Soils: Method C of ASTM D1557 (Modified Proctor)
2. For All Other Soils: Method C of ASTM D698 (Standard Proctor).

C. **Field Density**:

1. Use ASTM D3017 and test method C of ASTM D2922 for shallow depth nuclear testing.
2. No density determinations are required on any material containing more than 65 percent material retained on the number 10 sieve or more than 60 percent material retained on the number 4 sieve. In lieu of reporting densities in such cases, report the sieve analysis to document the material type.

3.3 REPORT

A. For each material tested, document the following:

1. Vertical and horizontal location of the test.
2. Optimum laboratory moisture content.
3. Field moisture content.
4. Maximum laboratory dry density.
5. Field density.
6. Percent compaction results.
7. Certification of test results by Independent Testing Agency.

END OF SECTION

SECTION 31 25 00

EROSION AND SEDIMENTATION CONTROL

PART 1 GENERAL

1.1 SECTION INCLUDES

A. Erosion control and slope protection facilities including blankets or mulches.

B. Construction of drainage facilities to protect work area.

1.2 SUBMITTALS

A. Submit before using:

1. Sample of blanket or geotextile materials.
2. Mulch formula.
3. Grass mixture listing.
4. Plant list.
5. Geotextile manufacturer's certification.

B. Application rate of fiber mulches recommended by tackifier manufacturer.

1.3 DELIVERY, STORAGE AND HANDLING

A. Deliver seed in original containers with certified germination test results showing analysis of seed mixture, percentage of pure seed, year of production, and date of packaging. Damaged packages are not acceptable. Store seed free of moisture.

B. Deliver fertilizer in waterproof bags showing weight, chemical composition and name of manufacturer.

C. Deliver blanket in original wrapping showing name of manufacturer and product weight.

D. Deliver plant materials immediately before placement.

E. Replace plant when original root protection system (burlap bag wrap of earth ball, plastic container with special plant bedder, etc.) has been broken or displaced before planting.

PART 2 PRODUCTS

2.1 MATERIALS

A. Riprap: Rock, Section 31 37 00.

B. Blankets: Uniform open weave jute, wood fiber, biodegradable or photodegradable synthetic fiber matting.

C. Geotextiles: Section 31 05 19.

D. Erosion Control Vegetation Mats: Permanent three dimensional mats that allow for revegetation where high water flows are expected.

E. Fiber Mulches: Straw, hay, wood or paper free from weeds and foreign matter detrimental to plant life.

F. Mulch Binder: Vegetable based gel tackifier with growth stimulant.

G. Topsoil and Fertilizer: Section 31 05 13 and Section 32 92 00.

PART 3 EXECUTION

3.1 PREPARATION

A. Remove foreign materials, roots, rocks, debris.

B. Grade to eliminate rough spots, ponding areas.

C. Grade soil to drain perimeter water away from protected areas.

D. Temporary controls, Section 01 57 00 as applicable.

3.2 SLOPE PROTECTION BLANKET

A. Cover seeded slopes where grade is greater than one (1) vertical to three (3) horizontal with blanket. Roll down over slopes carefully and loosely without stretching or pulling.

B. Lay blanket smoothly on prepared soil surface. Bury top end of each section in a narrow trench. Leave 24 inches overlap from top roll over bottom roll. Leave 12 inches overlap over adjacent section.

C. Toe-wrap fabric at bottom of slope.

D. Staple loosely the outside edges and overlaps.

E. In ditches, lay matting in upstream direction. Overlap and staple ends six (6) inches with upstream section on top.

F. If natural drainage water traverses protected or controlled area; construct a channel or riprap Section 31 37 00.

G. Lightly dress slopes with topsoil to ensure close contact between cover and soil.

H. Present alternative methods of protection for approval before starting any work.

3.3 GEOTEXTILE

A. Placement, Section 31 05 19.

3.4 MULCHES

A. Apply mulches at the rate necessary.

B. When installed with a tackifier, apply at the rate recommended by the tackifier supplier.

3.5 SURFACE COVER

A. Grass, Section 32 92 00.

B. Ground cover, Section 32 93 13.

3.6 **MAINTENANCE**

A. Maintain surfaces and supply additional topsoil where necessary, including areas affected by erosion.

B. Protect and repair geotextiles, Section 31 05 19.

C. Keep surface of soil damp only as necessary for seed germination.

D. Apply water slowly so surface of soil will not puddle and crust.

E. Replant damaged grass areas showing root growth failure, deterioration, bare or thin spots, and eroded areas.

F. Re-fertilize 60 days after planting.

G. Remove weeds that are over three (3) inches high.

END OF SECTION

SECTION 32 12 16.13
PLANT-MIX BITUMINOUS PAVING

PART 1 GENERAL

1.1 SECTION INCLUDES

A. Place a bituminous concrete pavement base course, leveling course, surface course, overlay course, or an inlay course.

1.2 REFERENCES

A. **AASHTO Standards**:

R9	Acceptance Sampling Plans for Highway Construction.
TP68	Bulk Specific Gravity and Density of Compacted Asphalt Mixtures Using Automatic Vacuum Sealing Method.
T324	Hamburg Wheel-Track Testing of Compacted Hot-Mix Asphalt (HMA).

B. **ASTM Standards**:

D979	Sampling Bituminous Paving Mixtures.
D1188	Bulk Specific Gravity and Density of Compacted Bituminous Mixtures Using Coated Samples.
D2041	Theoretical Maximum Specific Gravity of Bituminous Paving Mixtures.
D2725	Bulk Specific Gravity and Density of Non-Absorptive Compacted Bituminous Mixtures.
D2950	Density of Bituminous Concrete In Place by Nuclear Method.
D3549	Thickness or Height of Compacted Bituminous Paving Mixture Specimens.
D3665	Random Sampling of Construction Materials.
D5361	Sampling Compacted Bituminous Mixtures for Laboratory Testing.
D6927	Marshall Stability and flow of Bituminous Mixtures.

1.3 DEFINITIONS

A. Must Grind: Defined in Section 32 01 31.

B. Road Class: Defined in Section 32 01 31

1.4 SUBMITTALS

A. **Before Delivery**: Submit 48 hours before delivery:

1. Location and name of bituminous concrete production facility.
2. Mix design method.
3. Mix identification number or code.

4. Type, grade, and weight of binder.
5. Type, grade, and weight of aggregate.
6. Traffic control plan, Section 01 55 26.
7. Type and number of rollers.
8. Manufacturer's certificate of compliance for paving geotextiles. (Refer to Section 31 05 19).
9. Certification of profilograph and profilograph operator.
10. Cold weather paving plan.

B. **At Delivery**: For each batch delivered to site identify:
1. Date and project description.
2. Producer and plant.
3. Name of contractor.
4. Serial number of ticket.
5. Mix identification number or code.
6. Truck number and time dispatched.
7. Volume of mix delivered.

C. **After Placement**: Before final payment submit summary report describing profile deviation and profile roughness. See Section 32 01 31.

1.5 .**QUALITY ASSURANCE**

A. Do not change aggregate source or binder grade until ENGINEER accepts new source and new mix design.

B. Reject product and work that does not meet requirements of this Section.

C. Remove product found defective after installation and install acceptable product at no additional cost to OWNER.

D. Foreman of paving crew has completed at least three (3) projects of similar size and nature.

E. If requested, submit a quality control and testing report describing source and field quality assurance activities performed by CONTRACTOR and Suppliers.

F. For all equipment and hand tools used to mix, haul, and place the bituminous concrete, use a release agent that does not dissolve asphalt and is acceptable to ENGINEER.

1.6 **WEATHER**

A. Temperature:
1. April 15 to October 15: Place pavement when air temperature in the shade and the roadway surface temperature are above 50 deg F. The ENGINEER determines may provide written approval if it is acceptable to place outside of this temperature limit.
2. Before April 15 and After October 15: Provide a Cold Weather Paving Plan. ENGINEER must accept the plan before proceding.

Include the following details.

a. Haul details.

b. Placement details.

c. Compaction aids used in production.

d. Coordination procedure for acceptance testing.

B. Moisture: Do not place on frozen base, during adverse climatic conditions such as precipitation, or when roadway surface is wet or icy.

1.7 **NOTICE**

A. Follow Laws and Regulations concerning when and to whom notices are to be given. Send written notice at least three (3) days before start of paving.

B. Indicate paving time and when new surface can be used.

C. Warn of potential vehicle tow away and other construction issues affecting neighborhood.

D. Should work not occur on specified day, send a new notice.

1.8 **ACCEPTANCE**

A. **General**:

1. Acceptance is by Lot.

2. If non-complying material has been installed and no price for the material is specified, apply pay adjustment against cost of work requiring complying material as part of its installation, Section 01 29 00.

3. Dispute resolution, Section 01 35 10.

4. Opening a paved surface to traffic does not constitute acceptance.

5. Observation of CONTRACTOR's field quality control testing does not constitute acceptance. Such testing; however, may be used by ENGINEER for acceptance if requirements of Section 01 35 10 are met.

B. **Mix Material**: Accepted as specified for bituminous concrete , Section 32 12 05, or rubberized asphalt concrete, Section 32 12 08.

C. **Mix Temperature at Site:**

1. Reject mixes in the transport material exceeding the following temperatures.

a. Hot mix, 425 deg F.

b. Warm mix, 300 deg F.

c. Oil sand bituminous concrete, 230 deg F.

2. Dispose of cold mix in paver hopper as thin spread underlay.

D. **Grade, Cross Slope**: Verify tolerances are not exceeded.

E. **Compaction**: Options for acceptance are 1) core density, 2) non-destructive test density, or 3) control strip density with visual observation. Use core density unless specified elsewhere. A Lot is acceptable if density tests are within pay factor 1.00 limits. At ENGINEER's discretion, a Lot with deficient sub-lot density tests may be accepted if pay is adjusted using an applicable pay factor in the following table, or accepted at 50 percent pay if a sub-lot is in Reject.

Table 1 – Compaction Pay Factors		
Pay Factor	**Density, in Percent Relative to ASTM D2041**	
	Average	**Lowest Test**
0.70	More than 96	–
1.00	**92 to 96**	**89 or greater**
0.90	92 to 96	Less than 89
0.80	Less than 92	89 or greater
Reject	Less than 92	Less than 89

1. **Core Density**: This method compares the average density of cores extracted from a pavement surface to maximum theoretical density:
   a. Lot Size: One (1) day production with 1,000 square yard sub-lots or part thereof.
   b. Sampling Protocol: Use ASTM D3665 to randomly select in each sub-lot at least one (1) surface test location and one (1) longitudinal joint test location. Collect at least two (2) test samples at each test location, ASTM D5361. Samples are full depth or overlay depth in overlay construction.
   c. Testing Protocol: ASTM D2725 for core density and ASTM D2041 (Rice) for maximum theoretical density.
2. **Non-Destructive Density Testing by Gage**:
   a. Lot Size: One (1) day production with 1,000 square yard sub-lots or part thereof.
   b. Sampling Protocol: Use ASTM D3665 to randomly select in each sub-lot at least one (1) surface test location and one (1) longitudinal joint test location.
   c. Testing Protocol: ASTM D2950 (nuclear gage) or AASHTO TP68 (non-nuclear gage) and ASTMD 2041 (Rice) for maximum theoretical density.
3. **Control Strip Density with Visual Observation**:
   a. Lot: One (1) day production.
   b. Sampling Protocol: Not required after rolling pattern is determined.
   c. Testing Protocol: ASTM D6927 (Marshall) and D2041 (Rice method) to determine rolling pattern for 94 percent compaction, thereafter visual examination.
4. **Compaction Dispute Resolution**:

a. CONTRACTOR:

1) Provide an Independent Testing Agency, Section 01 45 00.

2) Take two (2) supplement cores midway between deficient acceptance test locations, and midway between a deficient test location and an adjacent acceptable test location.

3) Patch core holes.

4) Conduct testing at no additional cost to OWNER.

b. ENGINEER:

1) Accept Lot at full pay if new information shows compliance, or

2) Accept Lot at pay reduction using new test information, or

3) Reject Lot.

F. **Thickness**: A Lot is acceptable if test deficiencies are within pay factor 1.00 limits. At ENGINEER's discretion, a Lot with sub-lot deficiencies greater than allowed for pay factor 1 in the following table may be accepted if pay is adjusted using one of the following applicable pay factors, or accepted at 50 percent pay if a sub-lot is in Reject.

Table 2 – Thickness Pay Factor

Pay Factors	Deficiency Limits, in Inches
1.00	0.00 to 0.375
0.90	0.376 to 0.50
0.70	0.51 to 0.75
Reject	0.76 to 1.00

1. **Lot Size**: One (1) day production with 1,000 square yard sub-lots or part thereof.

2. **Sampling Protocol**: Use ASTM D3665 to randomly select at least one surface test location and one longitudinal joint test location in each sub-lot. Collect at least two (2) core samples at each test location, ASTM D5361. Samples are full depth. Overlay construction measured only on overlay portion of core sample.

3. **Testing Protocol**: ASTM D3549:

a. Minimum Specified Thickness: A Lot specified to have minimum thickness will be accepted if all sub-lot measurements meet or exceed minimum. If thickness is deficient, additional material may be placed over the deficient thickness if there is no pavement feathering; placement matches this section's thickness tolerance; surface continues to drain; and roughness tolerance is met.

b. Actual Specified Thickness: A Lot specified to have actual thickness is acceptable if any sub-lot measurement does not exceed deficiency limits for thickness pay factor 1.00.

4. **Thickness Dispute Resolution**:
   a. CONTRACTOR:
      1) Hire an Independent Testing Agency, Section 01 45 00.
      2) Take two (2) additional cores midway between deficient acceptance test locations, and midway between a deficient test location and the next adjacent acceptable test location.
      3) Patch core holes.
      4) Conduct testing at no additional cost to OWNER.
   b. ENGINEER:
      1) Graph deficient areas by plotting new cores and original cores to define deficient areas assuming the following.
         a) The graph represents the thickness of the pavement.
         b) Thicknesses vary linearly along the pavement length from core depth to core depth.
         c) The pavement is a constant depth in the transverse direction.
      2) Accept Lot at full pay if new information shows compliance, or
      3) Accept Lot at pay reduction using new test information, or
      4) Reject Lot.

G. **Profile Roughness and Profile Deviation**: Section 32 01 31.

1.9 **WARRANTY**

A. Joints at Street Fixtures and Portland Cement Concrete Flat Work: If wider than 1/2 inch before end of the correction period seal joints with asphalt rubber or rubberized asphalt; Section 32 01 17.

PART 2 PRODUCTS

2.1 **MATERIALS**

A. Bituminous concrete, Section 32 12 05.

B. Rubberized asphalt concrete, Section 32 12 08.

C. Tack coat, Section 32 12 13.13.

D. Prime coat, Section 32 12 13.19.

E. Paving geotextile, Section 31 05 19.

F. Paving geogrid, Section 31 05 21.

PART 3 EXECUTION

3.1 CONSTRUCTION EQUIPMENT

A. Paver Machine: Use track equipment when operating on fabrics, geogrids or pavement mats hotter than 180 deg F

B. Compactors: Steel wheel static or vibratory. Use pneumatic tire roller for intermediate rolling only.

3.2 PREPARATION

A. General:

1. Locate and preserve utilities Section 01 31 13. Contact utility companies and other agencies, for dangerous concentration of combustible, flammable, or explosive matter.
2. Lower Street Fixtures if paving machine is not capable of passing over the fixtures.
3. Remove vegetation from cracks, edges and joints. Sweep surface clean. Blow cracks clean. Remove leaves.
4. Fill cracks and fix Potholes, Section 32 01 17.
5. Stabilize Portland cement concrete subgrade slabs.

B. Traffic Control:

1. Implement notification and traffic control plan requirements, Section 01 55 26. Do not proceed without certified flaggers.
2. Apply temporary lane marking tape or paint after layout has been verified with ENGINEER.

C. Aggregate Base Course:

1. Verify base course is placed to grade, compacted and dampened.
2. If indicated, follow Section 31 31 19 requirements for herbicide treatment or Section 32 12 13.19 for prime coat applications.

3.3 PROTECTION

A. Trees, Plants, Ground Cover:

1. Protect trees, plants and other ground cover from damage.
2. Prune trees to allow equipment passage underneath, Section 32 01 93. Repair tree damage at no additional cost to OWNER.

B. Protect all structures, including curb, gutter, sidewalks, guard rails and guide posts from physical damage. Remove spatter, over-coat, or mar.

C. Do not discharge bituminous materials into borrow pits or gutters.

D. Protect hot pavement from traffic until cool enough not to become marred.

E. Remove saw-cut dust immediately. Protect neighborhood, storm drains and down-stream fish habitat.

3.4 TEMPORARY SURFACING

A. Place, roll, maintain, remove and dispose of temporary Pavement surfaces.

B. In sidewalk areas construct temporary pavements at least 1 inch thick and in all other areas at least two (2) inches thick. At major intersections and other critical locations a greater thickness may be required.

3.5 LINE AND GRADE CONTROL

A. Provide necessary survey stakes for horizontal and vertical control.

B. Furnish, place, and maintain supports, wire devices, and materials as required to provide continuous line and grade reference controls for placing pavement, matching existing pavement surfaces, etc.

3.6 FABRIC PLACEMENT

A. Section 31 05 19.

3.7 PAVEMENT PLACEMENT

A. General:

1. Barricade off or eliminate fall off edges.
2. Provide continuous forward paver movement so temperature 10 feet behind paver is as follows:
   a. Warm Mix Placement: 200 deg F minimum.
   b. Hot Mix Placement:

Table 3 – Minimum Pavement Temperature in Degrees F.

Air Temperature Deg F	Compacted Mat Thickness					
	3/4"	1"	1-1/2"	2"	3"	4"+
45 – 50	–	–	–	–	280	265
50 - 59	–	–	–	280	270	255
60 - 69	–	–	285	275	265	250
70 - 79	285	285	280	270	265	250
80 - 89	280	275	270	265	260	250
90 +	275	270	265	260	250	250

B. Overlays or Subsequent Lifts:

1. Allow new base pavement or new inlay pavement to cure (harden) before placing overlays.
2. Apply tack coat per Section 32 12 13.13 if inlay or sub-base Pavement surface is dirty or older than 24 hours.

C. Irregular Areas: Handwork is acceptable if specified grade, slope, compaction and smoothness are achieved.

D. Compaction:

1. Test mix placement until a compaction pattern is acceptable to CONTRACTOR. Continue random quality control testing.
2. Do not over compact or under compact.

3. Complete compaction before the following temperature are reached:
   a. 180 deg F for hot mixes.
   b. 140 deg F for warm mixes.

E. Joints:
1. Construct joints to industry standards for texture, density and smoothness.
2. Clean contact surfaces and apply tack coat. Ensure continuous bond between old and new pavements, or between successive day's work.
3. Offset longitudinal joints a minimum of 12 inches in succeeding courses and at least six (6) feet transversely to avoid a vertical joint through more than one course. In the top course restrict longitudinal joint to 1 foot either side of lane lines.
4. Prevent traffic, including construction traffic, from crossing vertical edges. Apply tack coat to vertical edges before making another pass with paver if mix has cooled to 90 deg F

3.8 TOLERANCES

A. Compaction: Target is 94 percent of ASTM D2041 (Rice density) plus or minus two (2) percent.

B. Lift Thickness: If not indicated, meet the following tolerances.

Table 4 – Lift Thickness Tolerance

Mix Design Method	Minimum	Maximum
Marshall	2 times maximum aggregate size	Not more than limits established by manufacturer of compactor equipment
Performance Grade (Superpave)	4 times *nominal* aggregate size	
NOTES (a) Thickness is measured after compaction.		

C. Smoothness:
1. Parallel to Centerline: Section 32 01 31.
2. Cross Slope: 1/4 inch in 10 feet except at cross section grade breaks.

3.9 REPAIR

A. Repair ride disturbing or unsafe butt joints. Repair expense is at no additional cost to OWNER.

B. If pavement smoothness is deficient, follow Section 32 01 31 repair requirements.

C. Corrective Action for Profile Deviations ("Must Grinds"): Grinding is acceptable. See Section 32 01 26. Apply a fog seal over grind areas. See Section 32 01 13.50. If depressions cannot be corrected by grinding, remove and replace.

D. Corrective Action for Profile Roughness Index: Grinding is acceptable. Re-profile corrected segments to verify ride index meets tolerance. Apply a fog seal over grind areas. See Section 32 01 13.50.

E. When thickness is deficient, place additional material over deficient areas. DO NOT skin patch. Mill for inlay if necessary.

F. Defective Joints, Seams, Edges: Repair.

G. Unacceptable Paving: Remove and replace.

3.10 **OPENING TO TRAFFIC**

A. Temperature of pavement surface is not more than 180 deg F

END OF SECTION

Open driveway approach

1. GENERAL

A. Variance from specified dimensions and slopes must be acceptable to the ENGINEER. System configuration may be changed at ENGINEER's discretion.

B. Field Changes to Slope Requirements:
   1) Grades may have a 6 percent change in slope over a 11 feet wheel base run for both crest or sag vertical curves.
   2) Where heavy truck use and fire truck access applies, or to improve design speed, design grades should be cut in half.
   3) Specific uses or site conditions may require profile design submittal for review and acceptance.

C. Additional requirements are specified in APWA Section 32 16 13.

2. PRODUCTS

A. Base Course: Untreated base course, APWA Section 32 11 23. Do not use gravel as a base course without ENGINEER's permission.

B. Expansion Joint Filler: 1/2-inch thick type F1 full depth, APWA Section 32 13 73..

C. Concrete: Class 4000, APWA Section 03 30 04. If necessary, provide concrete that achieves design strength in less than 7 days. Use caution; however, as concrete crazing (spider cracks) may develop if air temperature exceeds 90 degrees F.

D. Reinforcement: Galvanized or epoxy coated, deformed, 60 ksi yield grade steel, ASTM A615.

E. Concrete Curing Agent: Clear membrane forming compound with fugitive dye (Type ID Class A), APWA Section 03 39 00.

3. EXECUTION

A. Base Course Placement: APWA Section 32 05 10. Maximum lift thickness before compaction is8- inches when using riding equipment or 6-inches when using hand held equipment. Compaction is 95 percent or greater relative to a modified proctor density, APWA Section 31 23 26.

B. Reinforcement: Not required if driveway apron is constructed without a cold joint.

C. Concrete Placement: APWA Section 03 30 10.
   1) Install expansion joints vertical, full depth, with top of filler set flush with concrete surface.
   2) Install contraction joints vertical, 1/8-inch wide or 1/4 slab thickness if the slab is greater than 8-inches thick. Maximum length to width ratio for non-square panels is 1.5 to 1. Maximum panel length (in feet) is 1.5 times the slab thickness (in inches).
   3) Provide 1/2-inch radius edges. Apply a broom finish. Apply a curing agent.

D. Protection and Repair: Protect concrete from deicing chemicals during cure. Repair construction that does not drain. If necessary, fill flow-line with water to verify.

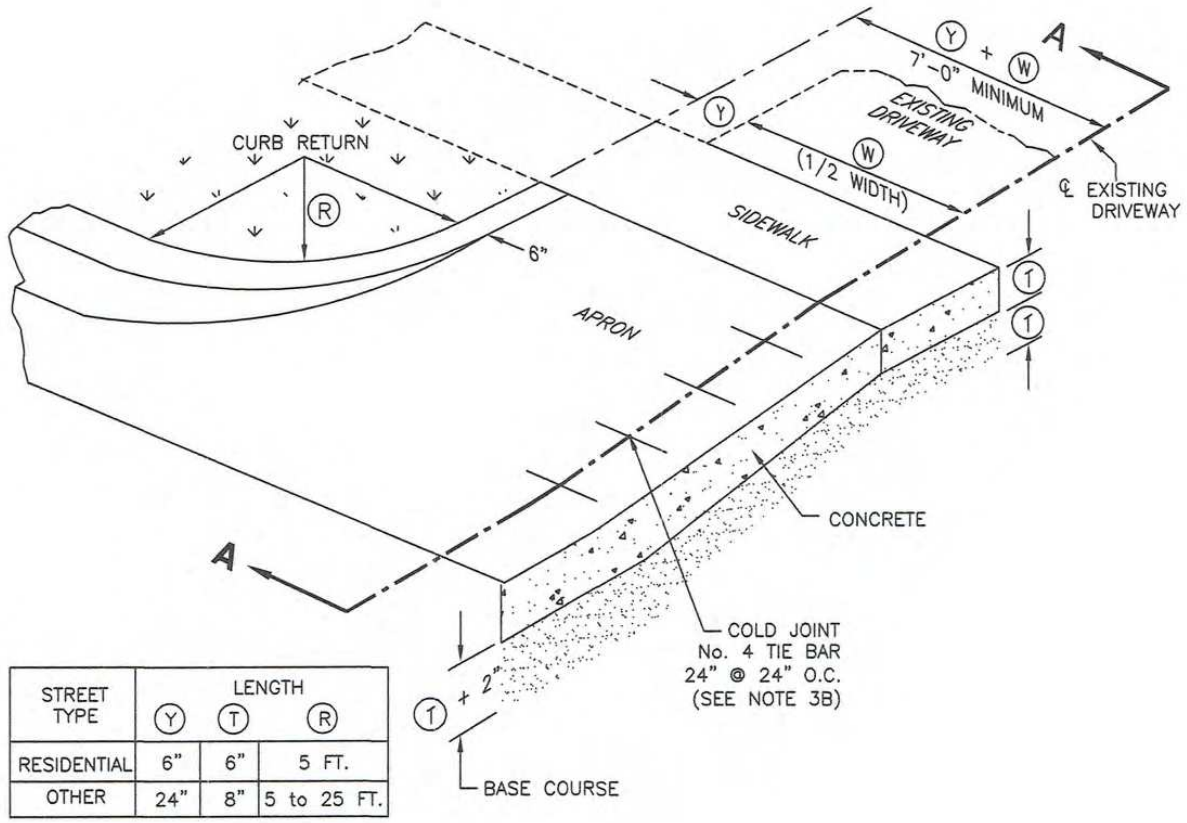

STREET TYPE	LENGTH Y	T	R
RESIDENTIAL	6"	6"	5 FT.
OTHER	24"	8"	5 to 25 FT.

OBLIQUE

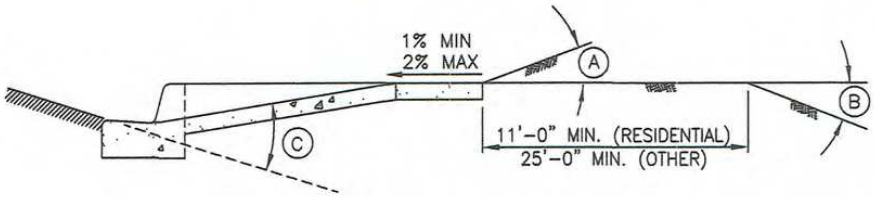

STREET TYPE	BREAK OVER ANGLE (MAXIMUM) A	B	C
RESIDENTIAL	16%	12%	16%
OTHER	6%	8%	10%

SECTION A-A - APPROACH REQUIRING SERVICE TRUCK ACCESS

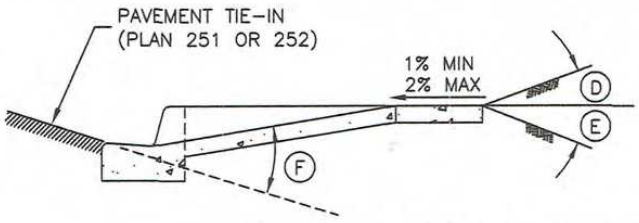

STREET TYPE	BREAK OVER ANGLE (MAXIMUM) D	E	F
RESIDENTIAL	16%	12%	16%
OTHER	6%	8%	10%

SECTION A-A - TYPICAL DRIVEWAY APPROACH

DIVISION 2b EARTHWORK
2b.01 General
2b.02 Excavation For Structures
2b.03 Backfill Around Structures
2b.04 Construction Of Embankments And Fills
2b.05 Compacting Earth Materials

2b.01 General

This Division defines the requirements for excavation and backfill for structures, construction requirements for embankments and fills, and subgrade preparation for pavements and other surface improvements.

2b.02 Excavation For Structures

Where suitable subgrade soils exist structures shall be founded on undisturbed original subsoil. All unauthorized excavation below the specified subgrade shall be replaced with concrete, monolithic with that of the slab above or with coarse gravel thoroughly compacted into place.

Subgrade soils for structures not suitable for proper support shall be replaced with firm, dense, thoroughly compacted and consolidated material free from mud and muck. Coarse gravel or crushed stone may be used for subsoil reinforcement if satisfactory results can be obtained thereby. Such material shall be applied in thin layers, each layer being embedded in the subsoil by thorough tamping. All excess soil shall be removed to compensate for the displacement of the gravel or crushed stone and the finished elevation of any subsoil reinforced in this manner shall not be above the specified subgrade elevation.

2b.03 Backfill Around Structures

Backfill around structures shall be placed to the lines shown on the drawings, or as directed. After completion of foundation footings and walls and other construction below the elevation of the final grades, and prior to backfilling, all forms shall be removed and the excavation shall be cleaned of all trash and debris. Material for backfilling shall consist of suitable excavated material or imported sand, gravel, or other suitable material, and shall be placed in lifts which will allow the densities to be achieved and which in any event shall not exceed 8-inches in uncompacted thickness. Each layer shall be compacted by hand or machine tampers or by other suitable equipment to a density equal to 96% of maximum dry density as measured by AASHTO T-180 (ASTM D1557).

2b.04 Construction Of Embankments And Fills

Unsuitable materials, such as roots, vegetation, or other organic material that occur in the foundations for embankments and fills shall be removed by clearing, stripping, and/or grubbing. Where suitable materials occur after stripping, the foundation shall be scarified to a depth of not less than 6-inches, and the loosened material shall be moistened and compacted as hereinafter specified for each layer. All materials in embankments and fills shall be placed, moistened, and compacted as provided in the following paragraphs.

When the embankment or fill exceeds the amount of excavation, sufficient additional material shall be obtained from borrow pits provided by the Developer. All material proposed to be imported shall be subject to the review and approval of the Engineer or their designee prior to starting of hauling operations.

The materials used for embankment and fill construction shall be free from sod, grass, trash, clods, rocks larger than 8-inches in diameter, and all other material unsuitable for construction of compacted

fills.

Grading of completed embankments and fills shall bring the surfaces to a smooth, uniform condition with final grades being within 0.1-foot of the design grade.

2b.05 Compacting Earth Materials

The material shall be deposited in horizontal layers having a thickness of not more than 10-inches prior to being compacted as hereinafter specified; provided that when mechanical equipment is used for placing and compacting the material on a sloping foundation, the layers may be placed parallel to the foundations. The distribution of materials shall be such that the compacted material will be homogeneous and free from lenses, pockets, or other imperfections.

Prior to and during compaction operations, the material shall have the optimum moisture content required for the purpose of compaction, and the moisture content shall be uniform throughout the layers, insofar as practicable. The moisture shall be controlled at two percent plus or minus of the optimum moisture as determined by AASHTO T-180 (ASTM D1557). Moistening of the material shall be performed at the site of excavation, but such material shall be supplemented as required by sprinkling at the site of construction. If the moisture content is more than optimum for compaction, the compaction operations shall be delayed until such time as the material has dried to the optimum moisture content. When the material has been conditioned as hereinbefore specified, the backfill or embankment shall be compacted as follows:

A. All trenches in the City Right of Way (typically under roadways and extending one foot beyond the proposed back of walk and under sidewalks and drive approaches to at least one foot each side of the edge of the slab), the fill or embankment material shall be compacted to a density equal to not less than 96% of maximum dry density as measured by AASHTO T-180 (ASTM D1557).

B. Other fills and embankments not listed above shall be compacted to a density equal to not less than 90% of maximum dry density, as measured by AASHTO T-180 (ASTM D1557).

DIVISION 4c VALVES, COUPLINGS AND FIRE HYDRANTS

4c.01 General
4c.02 Resilient Seated Gate Valve
4c.03 Butterfly Valve
4c.04 Valve Boxes
4c.05 Couplings
4c.06 Fire Hydrants

4c.01 General

This Division covers distribution valves to be used in the water system, couplings and fire hydrants.

4c.02 Resilient Seated Gate Valve

Valves in sizes 4-inch through 12-inch shall be of the iron body, non rising bronze stem, resilient seated type, manufactured to equal or exceed all applicable AWWA C-509 latest revision and all specific requirements outlined in these specifications. Acceptable manufacturers are Mueller Company, American Flow Control and Clow Valve Company, as directed by the City.

A. Valves shall open left and be provided with 2-inch square operating wrench nuts unless otherwise specified.

B. When valves are 'Mechanical Joint', they shall be furnished with all necessary glands, gaskets, followers, bolts and nuts to complete installation.

C. The disc shall have integrally cast ASTM B62 bronze stem nut to prevent twisting, binding or angling of the stem. Designs with loose stem nuts are not acceptable.

D. Bronze valve stems shall be interchangeable with stems of the double disc valves of the same size, direction of opening and manufacture.

E. All internal ferrous surfaces shall be coated, holiday free, to a minimum thickness of 4-mil with a two part thermo setting epoxy coating. Said coating shall be non-toxic, impart no taste to the water, formulated from materials deemed acceptable in the Food and Drug Administration Document Title 21 of the Federal Regulations on food additives, Section 121.2514 entitled Resins and Polymeric Coatings. It shall protect all seating and adjacent surfaces from corrosion and prevent build-up of scale or tuberculation.

F. The sealing element shall be secured to the disc with self-locking stainless steel screws, and it shall be field replaceable, and shall be such that it cannot be installed improperly.

G. Stem failure from over torquing in either the open or closed position shall occur externally at such a point as to enable the stem to be safely turned by use of a readily available tool after exposure of the valve through excavation.

H. Valve design shall incorporate a positive metal to metal stop to prevent over-compression of the sealing element.

I. A full faced composition gasket placed between machined body and bonnet flanges is required to eliminate cold flow or creep action present with "O" ring gasketed bodies.

J. Valves shall have a test plug in the bonnet area to vent air and allow line pressure testing.

K. The exterior of the valves shall be Asphalt Varnish, JAN-P-450. If exterior epoxy is used, all bolts and nuts shall be made of Stainless Steel to prevent galvanic corrosion of said nuts and bolts due to insulation from the ferrous valve and line.

4c.03 Butterfly Valve

All butterfly valves (Acceptable manufacturers are Mueller Company, M&H, Avtek and Clow Valve Company) shall conform to the latest revision of ANSI/AWWA Standard C504, Class 150-B, and comply with the following:

A. Valve bodies shall be cast iron, ASTM A126 Class B. Body ends shall be flanged with facing and drilling in accordance with ANSI B16.1, Class 125; or mechanical joint in accordance with ANSI/AWWA C-111/A21.11. All 'Mechanical Joint' end valves shall be furnished complete with joint accessories (bolts, nuts, gaskets, and glands). All valves shall conform with ANSI/AWWA Standard C-504, Table 3, Laying Lengths for Flanged Valves and Minimum Body Shell Thickness for all Body Types.

B. Valve disc shall be Ductile Iron ASTM A536, Grade 65-45-12. Valve disc shall be of the offset design providing 360 degree uninterrupted seating.

C. The resilient seat shall be natural rubber bonded to an 18-8, Type 304 Stainless Steel retaining ring secured to the disc by 18-8, Type 304 Stainless Steel screws. The seat shall be capable of mechanical adjustment in the field and field replaceable without the need for special tools. Valve body seat shall be 18-8, Type 304 Stainless Steel.

D. Valve shafts shall be 18-8, Type 304 Stainless Steel. Shafts shall be of the two piece stub design and attached to the disc by means of "O" ring sealed taper pins with lock nuts.

E. The valve assembly shall be furnished with a non-adjustable factory set thrust bearing designed to center the valve disc at all times.

F. Shaft bearings shall be contained in the integral hubs of the valve body and shall be self-lubricated sleeve type.

G. Valve shaft seal shall consist of "O" rings. Where the valve shaft projects through the valve body for actuator connection, the "O" ring packing seal shall be field replaceable as a part of a removable bronze cartridge.

H. When manual actuators are required they shall be of the traveling nut design capable of withstanding 450-foot-pounds of input torque against the open and closed stops. All actuators shall have adjustable mechanical stop limits. The closed position stop shall be externally adjustable. Valves shall be installed with the shaft horizontal unless otherwise directed by the City Engineer and shall be provided with a 2-inch square operating nut for manually operating the valve with a "T" handle wrench.

I. All valves shall be coated with epoxy in conformance to AWWA Standard C-550, latest revision. Interior wetted ferrous surfaces shall be coated a nominal 10 mils thick for long life; and body exterior shall have a minimum of 3 to 4-mil coating thickness in order to provide superior base for field-applied finish coats.

4c.04 Valve Boxes

All buried valves shall be installed complete with two-piece, cast iron, screw type, 5-1/4-inch shaft valve box with locking lid. The lid shall have the word "Water" or "Irrigation", as appropriate, cast in the metal.

Valves and valve boxes shall be installed where shown on the drawings. Valves and valve boxes shall be set within 1/4 to 1/2-inch plumb. Valve boxes shall be vertically centered directly over the valve within a tolerance of +/- 1/2-inch. Valves shall be aligned with property lines where possible. Earth fill shall be carefully tamped around the valve box to a distance of 4-feet on all sides of the box, or to the undisturbed trench face if less than 4-feet. Valve boxes shall have the interiors cleaned of all foreign matter before installation and before and after backfill, being accessible and free of debris.

All valve boxes located in streets shall be installed as nearly to grade as possible. Valve boxes placed in bituminous asphalt concrete surfaces, after the pavement is in place, the valve boxes shall be raised to grade (1/4 – 1/2-inch lower than asphalt), the surrounding asphalt shall be neatly cut to form a circular opening 2.5-feet in diameter with the valve box centered, and a 12-inch thick concrete collar shall be cast around the box. Valve boxes shall be installed as shown on the Drawings. Valve boxes in off-road areas shall extend 6-inches above grade and be collared and marked.

4c.05 Couplings

Acceptable manufacturers of couplings are HYMAX (grip), Romac (alpha) or Smith-Blair (18-inch long). Cast iron sleeves may be utilized, as approved by the City Engineer. Couplings shall be of the straight, transition, or reducing style as required by the City for the specific installation. All steel fittings and bolts shall be coated with a non-oxide coating and wrapped with 12-mil polyethylene.

4c.06 Fire Hydrants

Fire hydrants shall be "traffic model" type designed to conform to AWWA C502 and shall be of either the compression or toggle joint type. Hydrants shall be the Mueller Modern Centurion A-442, Clow Medallion or Waterous Pacer (with alpha base).

Hydrant valves shall be a minimum of 6-inch size. Hydrants shall be supplied complete with two 2-1/2-inch hose nozzles and one 4-1/2-inch pumper nozzle. All nozzles shall be provided with National Standard threading. A one cubic yard gravel sump shall be provided at each hydrant. All hydrants shall be mechanical joint end and shall be connected to the main by means of a flanged tee and flanged by mechanical joint auxiliary gate valve (or flange by alpha gate valve) and box as shown on Kaysville Standard Drawings. Each hydrant shall also be supplied with O-ring seals, a National Standard pentagon operating nut which is designed for clockwise rotation closing, and a 6-inch mechanical joint inlet.

All hydrants shall be factory painted red and must function properly. Where a parkstrip exists, hydrants shall be centered in the parkstrip +/- 3-inches. Hydrants must have a 3-foot minimum clear space around the hydrant. Hydrants must be located as shown on approved plans/drawings and be set vertically within +/- 1-inch out of level (plumb).

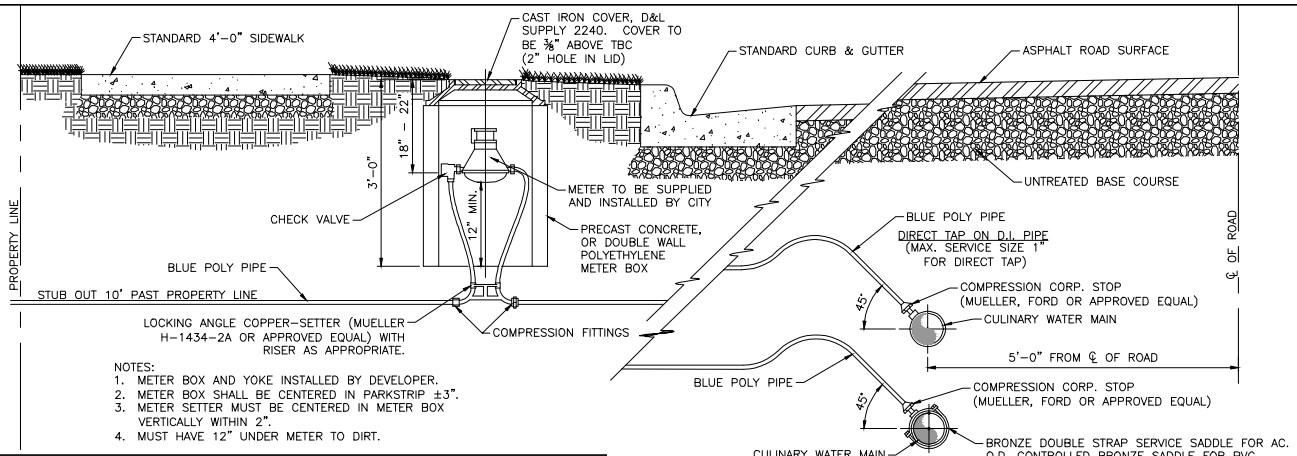

NOTES:
1. METER BOX AND YOKE INSTALLED BY DEVELOPER.
2. METER BOX SHALL BE CENTERED IN PARKSTRIP ±3".
3. METER SETTER MUST BE CENTERED IN METER BOX VERTICALLY WITHIN 2".
4. MUST HAVE 12" UNDER METER TO DIRT.

3 TYPICAL WATER CONNECTION
SCALE: N.T.S.

KAYSVILLE CITY CORPORATION WATER SERVICE INFORMATION						
SERVICE SIZE	METER BOX SIZE	TYPE OF MATERIAL FOR METER BOX	WATER METER	CONNECTION TYPE	BYPASS	DIST. BETWEEN FLANGE
3/4"	18" DIA	CONCRETE, GALVANIZED, POLYETHYLENE	BY CITY	NPT	NO	---
1"	24" DIA	CONCRETE, GALVANIZED, POLYETHYLENE	BY CITY	NPT	NO	---
2"	48" DIA	CONCRETE	OCTAVE (TURBINE METER)	FLANGE	1"	15 ¼"
3"	60" DIA	CONCRETE	OCTAVE (TURBINE METER)	FLANGE	1"	*
4"	4'X6' BOX	CONCRETE	OCTAVE (TURBINE METER)	FLANGE	2"	*
*CONTACT KAYSVILLE CITY						

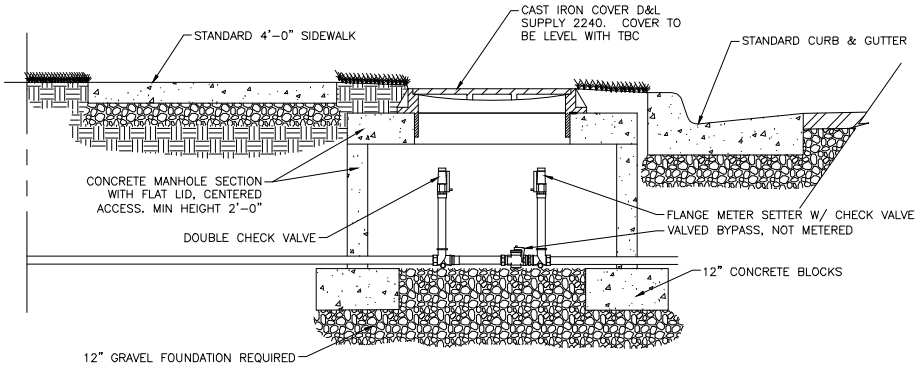

1 TYPICAL FLANGED METER SETTER WATER CONNECTION
SCALE: N.T.S.

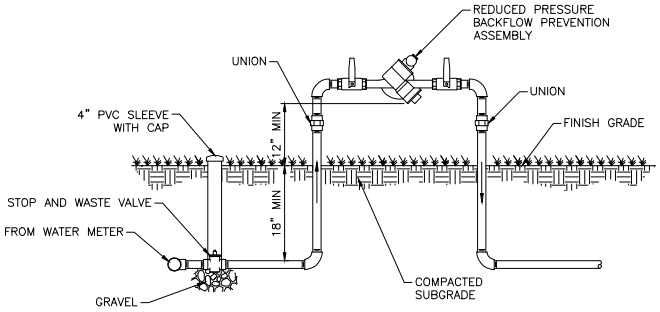

NOTE:
ALL FITTINGS AND NIPPLES FROM POINT OF CONNECTION TO MAINLINE SHALL BE BRASS.

2 REDUCED PRESSURE BACKFLOW PREVENTION ASSEMBLY
SCALE: N.T.S.

REUSE OF DRAWINGS
THIS DOCUMENT, AND THE IDEAS AND DESIGNS INCORPORATED HEREIN, AS AN INSTRUMENT OF PROFESSIONAL SERVICE, IS THE PROPERTY OF J-U-B ENGINEERS, Inc, AND IS NOT TO BE USED, IN WHOLE OR PART, FOR ANY OTHER PROJECT WITHOUT THE EXPRESS WRITTEN AUTHORIZATION OF J-U-B ENGINEERS, Inc.

NO.	REVISION DESCRIPTION	BY	APR.	DATE

FILE:
PROJ. #:
PLOT DATE: 1/20/2021
LAST UPDATED: 12/3/2020
DRAWN BY: KEF
DESIGN BY:
CHECKED BY:

Kaysville City

KAYSVILLE CITY CORPORATION
DEVELOPMENT STANDARDS

TYPICAL WATER SERVICE CONNECTION DETAILS

SHEET 4

Plot Date:1/20/2021 4:21 PM Plotted By: Mark Jenkins
Data Created:12/3/2020 (KAYSPUB)(P:\PROJECTS\JUB\KAYSVILLE STANDARDS\CAD\04-WATER SERVICE CONNECTION DETAILS.DWG

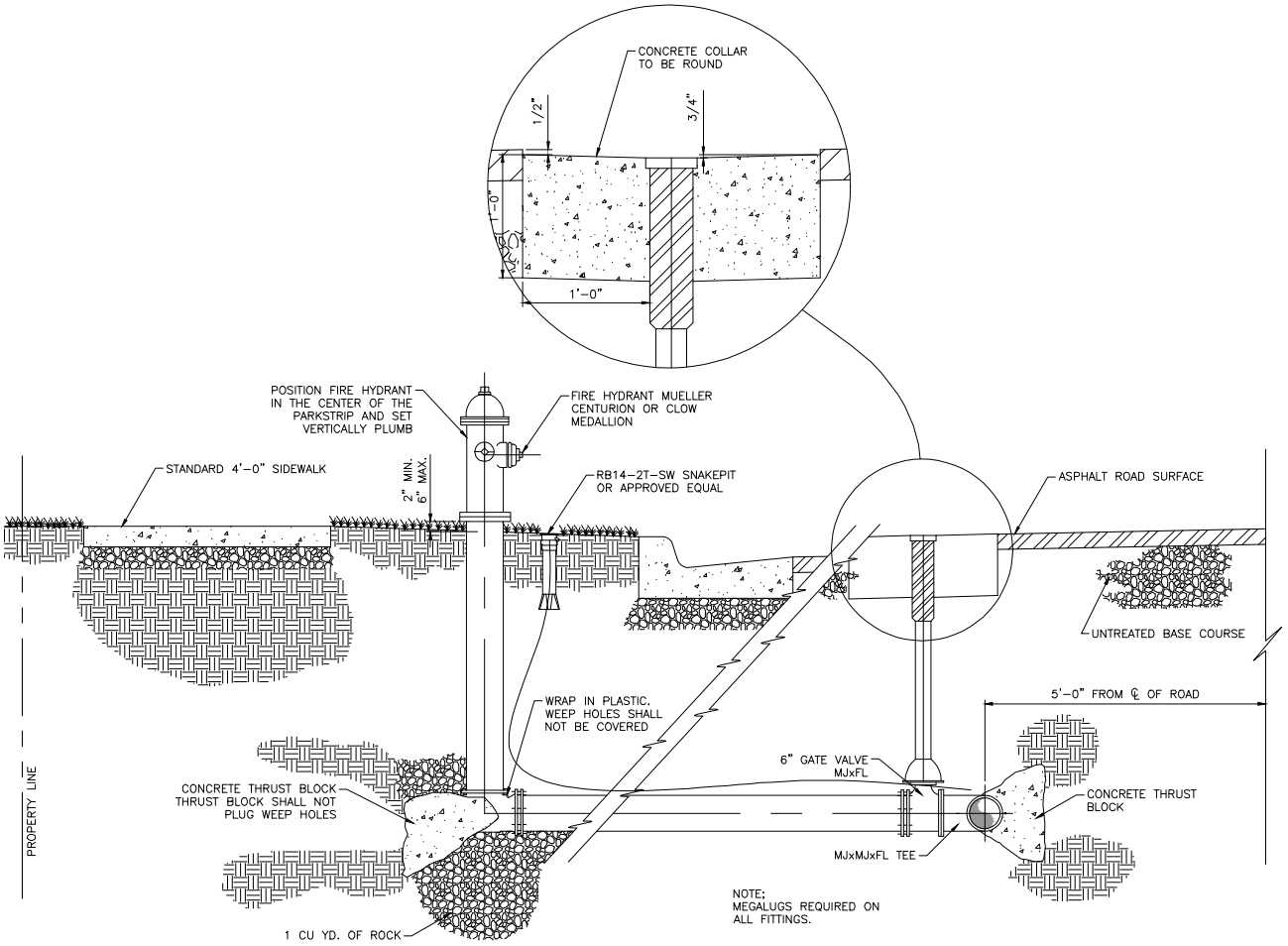

TYPICAL FIRE HYDRANT CONNECTION

SCALE: N.T.S.

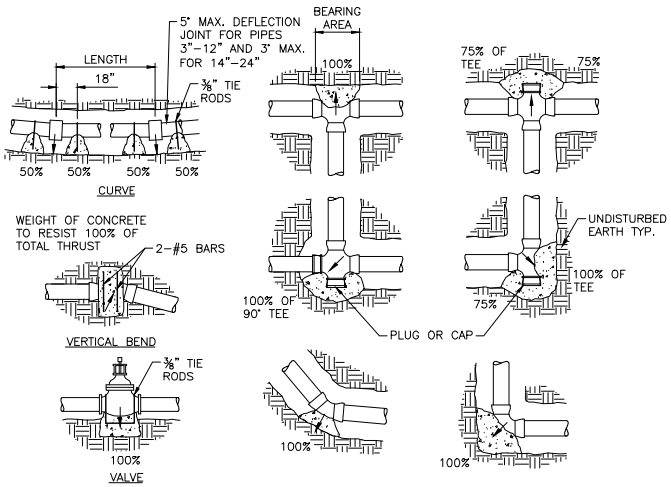

DETAIL NOTES:

1. ALL MJ AND FLANGED FITTINGS TO BE WRAPPED WITH POLYETHYLENE WRAP PRIOR TO POURING THRUST BLOCK.
2. FIGURE (100%) AT THRUST BLOCK INDICATES PERCENT OF TOTAL THRUST TO BE APPLIED FOR BEARING AREA.
3. ARROW INDICATES THRUST DIRECTION
4. CONCRETE FOR THRUST BLOCKS TO BE 2000 PSI MIX.

SIDE THRUST PER 100 PSI PRESSURE PER DEGREE OF DEFLECTION

PIPE SIZE - IN	SIDE THRUST - LBS	PIPE SIZE - IN	SIDE THRUST - LBS
4	35	14	377
6	72	16	486
8	122	18	665
10	197	20	790
12	278	24	1150

NOTE: MULTIPLY THRUST BY DEGREE OF DEFLECTION TO OBTAIN TOTAL THRUST

SIDE THRUST PER 100 PSI PRESSURE PER DEGREE OF DEFLECTION

PIPE SIZE - IN	DEAD END OR TEE	90° ELBOW	45° ELBOW	22.5° ELBOW
4	19	27	15	7
6	39	55	30	15
8	67	94	51	26
10	109	154	84	43
12	155	218	119	61
14	210	296	161	82
16	272	383	209	106
18	351	494	269	137
20	434	611	333	169
24	623	878	478	244

TABLE NOTES:

1. USE THE MAXIMUM INTERNAL PRESSURE ANTICIPATED (I.E. HYDROSTATIC TEST PRESSURE, POSSIBLE SURGE PRESSURE DUE TO PUMP SHUT-OFF, ETC.)
2. SEE SOILS REPORT FOR BEARING STRENGTH OF SOIL. IN THE ABSENCE OF A SOILS REPORT, AN AVERAGE SOIL (SPADABLE MEDIUM CLAY) CAN BE ASSUMED TO HAVE A BEARING STRENGTH OF 2000 PSF.

THRUST BLOCK DETAILS

SCALE: N.T.S.

EXAMPLE THRUST BLOCK CALCULATION:

1. 8" 90° ELBOW, PRESSURE = 200 PSI
2. FROM TABLE, THRUST = 94 X 200 = 18,800 LBS
3. ASSUME BEARING STRENGTH OF SOIL = 2000 PSF
4. $\frac{18800}{2000}$ = 9.4 FT² = AREA OF BEARING REQ'D FOR THRUST BLOCK

REUSE OF DRAWINGS
THIS DOCUMENT, AND THE IDEAS AND DESIGNS INCORPORATED HEREIN, AS AN INSTRUMENT OF PROFESSIONAL SERVICE, IS THE PROPERTY OF J-U-B ENGINEERS, Inc, AND IS NOT TO BE USED IN WHOLE OR PART, FOR ANY OTHER PROJECT WITHOUT THE EXPRESS WRITTEN AUTHORIZATION OF J-U-B ENGINEERS, Inc.

NO.	REVISION DESCRIPTION	BY	APR.	DATE

FILE:
PROJ. #:
PLOT DATE: 1/20/2021
LAST UPDATED: 1/20/2021
DRAWN BY: KEF
DESIGN BY:
CHECKED BY:

Kaysville City

KAYSVILLE CITY CORPORATION DEVELOPMENT STANDARDS

TYPICAL FIRE HYDRANT AND THRUST BLOCK DETAILS

SHEET 5

File Date:1/20/2021 4:21 PM | Plotted By: Mark Jenkins
Data Created:1/19/2021 K:\SYS\PUB\PROJECTS\JUBKAYSVILLE STANDARDS\CAD\DS-PIPE-HYDRANT_THRUST BLOCK.DWG

DIVISION 5b RESTORATION OF SURFACE IMPROVEMENTS

5b.01 General
5b.02 Field Verification Of Improvements
5b.03 Removal Of Pavement, Sidewalks, Curbs, Etc.
5b.04 Materials
5b.05 Restoring Concrete Or Ashphalt Street Surfaces
5b.06 Crack Filling/Sealing
5b.07 Asphalt Coatings
5b.08 Gravel Surface
5b.09 Miscellaneous Improvements
5b.10 Restoration Of Surfaces
5b.11 Cleanup
5b.12 Pavement Markings

5b.01 General

The Developer shall be responsible for the protection and the restoration or replacement of any improvements existing on public or private property at the start of work or placed there during the progress of the work.

Existing improvements shall include but not to be limited to permanent surfacing, curbs, gutters, sidewalks, planted areas, sprinklers, ditches, driveways, culverts, fences, decorative features and walls. All improvements shall be reconstructed to equal or better, in all respects, than the existing improvements removed. Any work being done in the City right of way shall first require an approved excavation permit. There are costs associated with these permits, based on the consolidated fee schedule. All work done in the City right of way shall conform with the requirements of the excavation permit.

5b.02 Field Verification Of Improvements

The Developer will be deemed to have carefully examined the site of the work and to have acquainted themselves with all conditions relating to the protection and restoration of existing improvements. The Developer shall be responsible to protect or restore existing improvements, whether shown on the drawings or not, unless agreed to in writing by the effected property owner and approved by the City.

5b.03 Removal Of Pavement, Sidewalks, Curbs, Etc.

Prior to any removal of road surface, the surface shall be cut vertically along the lines forming the trench, in such a manner as to not cause damage to adjoining pavement, sidewalk, curb and gutter, driveway, etc. For removal of sidewalk, curb and gutter, vertical cuts shall be made in the concrete only at the next adjacent joint. The portion to be removed shall then be broken up in a manner that will not cause damage to the asphalt or concrete outside the limits of the cuts; however, any surface damaged by the Developer or their work shall be replaced at the Developer's expense. The Public Works inspector shall determine the extents or limits of adjacent damage requiring replacement.

Broken paving materials and debris shall be removed immediately from the site of the work. If 4-feet or less of asphalt is left between the edge of a trench and the lip of the curb (or edge of pavement if there is no curb) after removal, then the asphalt shall be removed to the lip of curb (or edge of road if there is no curb) to safeguard against differential settlement.

5b.04 Materials

Materials used for repair or replacement of surface improvements shall be equal to or better than the material removed:

A. Untreated Base Course. Untreated base course shall comply with Utah Department of Transportation Standard Specifications, latest edition. The Developer shall take samples of the untreated base course on a random basis. All materials not meeting the tolerance requirements shall be removed from the project and replaced with specification material.

B. Asphalt. The asphalt surface shall be hot-rolled plant mix in accordance with the requirements of Division 5a.

C. Concrete. Concrete shall comply with section 02753 of the Utah Department of Transportation Standard Specifications.

5b.05 Restoring Concrete Or Ashphalt Street Surfaces

Where trenches are in or cross asphalt or concrete surfaced roads, traffic lanes, driveways, parking areas, etc., the asphalt or concrete surface must be restored in accordance with the requirements of the excavation permit, including, but not limited to:

A. Before Excavation. All existing asphalt or concrete surfaces shall be saw cut or roto-milled to a square edge before excavation.

B. Temporary Graded Surface. Until resurfacing can be done in paved areas a temporary untreated base course surface shall be placed deep enough to provide a minimum of 12-inches below the bottom of the asphalt surface and shall be brought flush with the top of the adjacent paved surface.

   The untreated base shall be placed in the trench at the time it is backfilled. Excess material shall be removed from the premises immediately. The temporary untreated base course surface will be maintained as needed by the Developer until the asphalt is placed.

C. Preparation for Paving. The area over trenches to be resurfaced shall be graded and rolled with a roller weighing not less than 12-tons, until the subgrade is firm and unyielding. Mud or other soft or spongy material shall be removed and the void filled with untreated base course and rolled and tamped thoroughly in layers not exceeding 12-inches in thickness. Sink holes in asphalt shall be cut out, excavated and replaced. Asphalt sinking of any kind will be cut out and replaced once the problem has been fixed. The edges of trenches which deteriorate or crumble prior to paving shall be removed and trimmed neatly before resurfacing.

   Before any permanent resurfacing is placed, the Developer shall trim the existing paving to clean, straight lines as nearly parallel to the centerline of the trench as practicable.

   Following backfill, the existing adjacent asphalt paving shall be cut back a minimum of an additional 18-inches beyond the previous cuts (T-Cut) for the excavation.

D. Asphalt Surface. The asphalt surface shall be restored by standard paving practices to a minimum thickness as indicated in Division 5a and on the standard drawings. Pavement over 3-inches shall be placed and rolled in two lifts. The asphalt surface should be 1/4-inch to 1/2-inch above the lip of curb and gutter. If the asphalt is more than 1/2-inch or less than 1/4-inch over the lip of the curb and gutter, an overlay to adjust the grade shall be required, as directed by the City Engineer.

   Pavement restoration shall include priming of pavement edges with Type MC-70 bituminous material (tackifier) and placing rolled plant hot mix asphalt material to a level of 1/8-inch" to 1/4-inch above the adjacent pavement surfaces. Areas where there is unraveling of asphalt will be replaced.

5b.06 Crack Filling/Sealing

When pavement crack repairs are needed, vegetative growth should be removed from cracks, edges, and joints. Cracks should be prepared by blowing them out and dry prior to being filled by crack sealant. Melting of sealant should be per manufacturer's guidelines. The pavement crack seal should be dry before applying asphalt coatings.

Crack seal material should be per UDOT Standards 02745, Section 2.3 HOT-POUR CRACK SEALANT FOR BITUMINOUS CONCRETE or applicable current APWA standard 32.01.17 PAVEMENT CRACK SEAL. Crack seal shall be done prior to all asphalt coating projects.

5b.07 Asphalt Coatings

Depending on various factors, including, but not limited to the age and condition of adjacent asphalt, project scheduling and traffic conditions, asphalt surfacing may require a preventative maintenance coating, as determined and specified by the City Engineer. Asphalt coatings consist of chip seals with type A chips and a fog coat, type II slurries and seal coats (type specified by the City Engineer). All asphalt coatings (and their application) shall meet the applicable APWA Utah standards.

5b.08 Gravel Surface

Where trenches are excavated through gravel-surfaced areas such as roads and shoulders, parking areas, unpaved driveways, etc., the gravel surface shall be restored and maintained as follows:

A. The gravel shall be placed deep enough to provide a minimum of six inches of material.

B. The gravel shall be placed in the trench at the time it is backfilled. The surface shall be maintained by blading, sprinkling, rolling, adding gravel, etc., to maintain a safe, uniform surface. Excess material shall be removed from the premises immediately.

C. Material for use on gravel surfaces shall be obtained from sound, tough, durable gravel or rock meeting the following requirements for grading:

   Passing 1-inch sieve 100%
   Passing 1/2-inch sieve 79-91%
   Passing No. 4 sieve 49-61%
   Passing No. 16 sieve 27-35%
   Passing No. 200 sieve 7-11%

5b.09 Miscellaneous Improvements

It shall be the Developer's responsibility to restore to their original condition all irrigation canals, levees, culverts, gates, fences, drainage ditches, and all such improvements which are cut or disturbed during construction. Topsoil in farming areas or along road edges shall be stored separate from subsoil during pipe trench excavation. Topsoil shall be replaced during backfill operations as nearly as possible to its original condition, thereby assuring suitable soil for reseeding.

5b.10 Restoration Of Surfaces

Unless otherwise directed, all street surfacing, curbs, gutters, sidewalks, driveways, or other hard surface that must be removed in the performance of the work shall be restored in kind by the Developer in accordance with the Specifications contained herein. Deviation of more than 1/4-inch between old and new work or within new construction shall be corrected. Such measurement shall be made from a 10-foot minimum length straight edge. Adjoining surfaces between old and new must be flush.

5b.11 Cleanup

At the completion of each area of work all equipment, barricades, and similar items shall be removed from the area. All excess material will be removed. Adjacent borrow pits and road shoulders disturbed or used for storage of excavating materials will be smoothed and returned to its original contour.

5b.12 Pavement Markings

The Developer shall be responsible for restoration of pavement markings on all roadways. Restoration of pavement markings shall be provided for any removed or obliterated markings. The temporary markings shall conform to UDOT standards and specifications. Permanent pavement markings will then be replaced to conform to the applicable local and state specifications with approval from the City Engineer or their Representative.

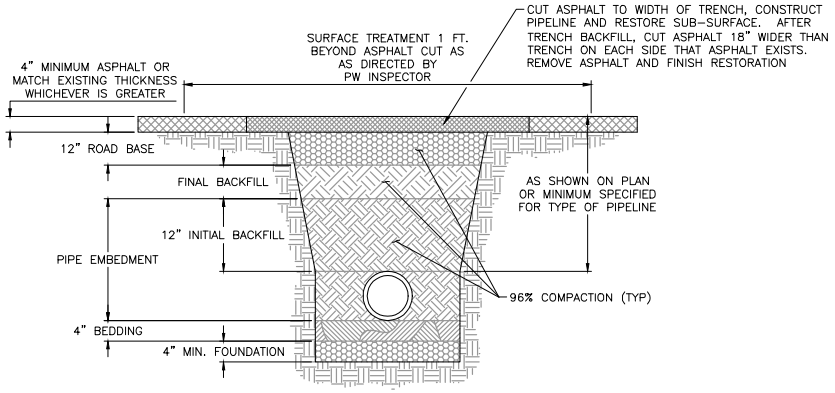

1 ASPHALT SURFACE
SCALE:N.T.S.

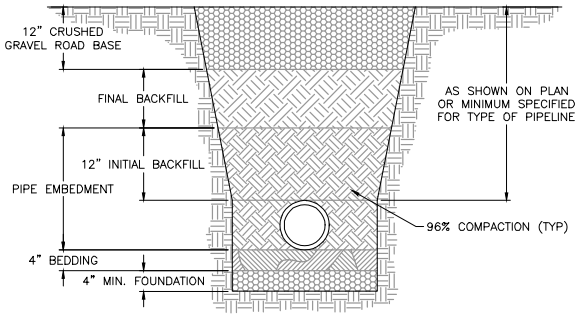

2 GRAVEL SURFACE
SCALE:N.T.S.

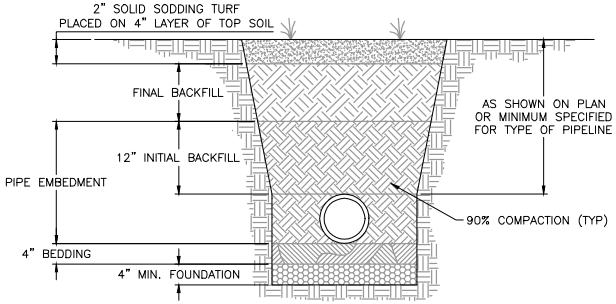

3 TURF SURFACE
SCALE:N.T.S.

NOTES:
1. SLOPE TRENCH TO MEET OSHA REQUIREMENTS (LATEST EDITION) OR USE TRENCH BOX.
2. FOUNDATION AND BEDDING MATERIAL AS REQUIRED.
3. INSTALL PIPELINES ON STABLE FOUNDATION WITH UNIFORM BEARING FOR FULL LENGTH OF BARREL, EXCAVATE IN BEDDING FOR ALL PIPE JOINTS.
4. IF GRAVEL MATERIAL IS USED FOR PIPE EMBEDMENT, FABRIC IS TO BE USED ON TOP OF GRAVEL BEFORE BACKFILLING TRENCH.
5. FOR POTHOLES: USE STATE SPEC. FLOWABLE FILL PER SECTION 03575 UDOT SPECS. UP TO ASPHALT GRADE AND THEN PAVE PROPER ASPHALT DEPTH
6. THE INDIVIDUAL RESPONSIBLE FOR THE COMPLETE REPAIR OF ALL ASPHALT SURFACES SHALL ALSO CRACK SEAL AND SURFACE TREATMENT THE ENTIRE EXCAVATED AREA AS DETERMINED BY KAYSVILLE CITY. ALL JOINTS SHALL BE CRACK SEALED PRIOR TO SLURRY SEAL. CRACK SEAL MUST BE INSPECTED BEFORE SLURRY SEAL IS APPLIED. SLURRY SEAL SHALL BE A TYPE 2 SLURRY WITH SAND.

TYPICAL TRENCH SECTIONS

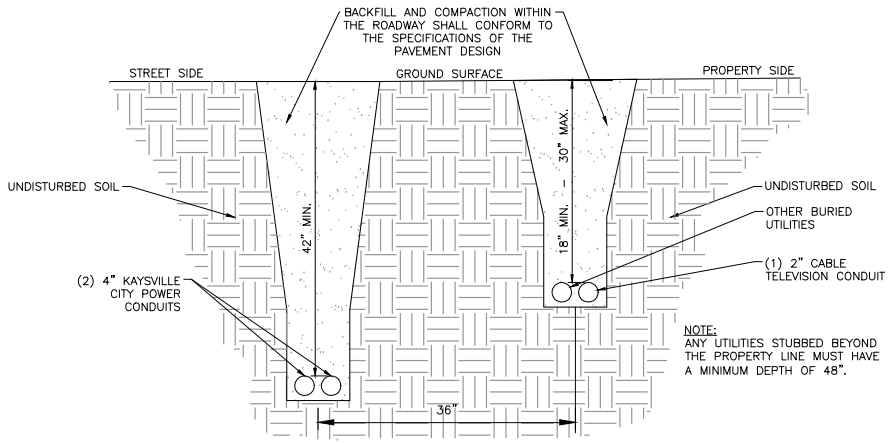

NOTE:
ANY UTILITIES STUBBED BEYOND THE PROPERTY LINE MUST HAVE A MINIMUM DEPTH OF 48".

POWER AND CABLE T.V. TRENCH SECTION

REUSE OF DRAWINGS
THIS DOCUMENT, AND THE IDEAS AND DESIGNS INCORPORATED HEREIN, AS AN INSTRUMENT OF PROFESSIONAL SERVICE, IS THE PROPERY OF J-U-B ENGINEERS, Inc, AND IS NOT TO BE USED IN WHOLE OR PART, FOR ANY OTHER PROJECT WITHOUT THE EXPRESS WRITTEN AUTHORIZATION OF J-U-B ENGINEERS, Inc.

NO.	REVISION DESCRIPTION	BY	APR.	DATE

FILE:
PROJ. #:
PLOT DATE: 2/11/2021
LAST UPDATED: 2/1/2021
DRAWN BY: KEF
DESIGN BY:
CHECKED BY:

Kaysville City

KAYSVILLE CITY CORPORATION
DEVELOPMENT STANDARDS

TYPICAL TRENCH SECTIONS

SHEET 16

Plot Date:2/11/2021 3:29 PM Plotted By: Mark Jenkins
Data Created 4/1/2020 J:\KAYSPUBLIC\PROJECTS\JUB\KAYSVILLE STANDARDS\CADD\16-TRENCH SECTIONS.DWG

DIVISION 2a TRENCH EXCAVATION AND BACKFILL
2a.01 General
2a.02 Barricades
2a.03 Blasting
2a.04 Sheeting, Bracing And Shoring Of Excavations
2a.05 Control Of Groundwater
2a.06 Trench Excavation
2a.07 Trench Backfill
2a.08 Trench Crossings And Easement
2a.09 Restoration Of Construction Site
2a.10 Developer's Responsibility
2a.11 Kaysville City Power And Light Underground Conduit Requirements

2a.01 General

This Division covers the requirements for trenching and backfilling for underground utilities. Unless otherwise directed by the City Engineer, pipe shall be laid in an open trench. All incidental clearing, preliminary grading, structure removal, and benching shall be considered a part of the trenching operation.

2a.02 Barricades

It is the Developer's responsibility to submit a traffic control plan to the City for approval at least 48-hours prior to digging, and shall not commence until City approval is received. Barriers shall be placed at each end of all excavations and at such places as may be necessary along excavations to warn all pedestrians and vehicular traffic of such excavations. Warning signs shall also be installed placed on both sides of overhead lines to warn workers, operators, truck drivers etc. of potential dangers. Lights or reflective barricades shall also be placed along excavations from one hour before sunset each day to one hour after sunrise of the next day until such excavations are entirely refilled, compacted, and surfaced or final graded. All excavations shall be barricaded in such a manner as to prevent persons from falling, walking, or otherwise entering any excavation in any street, roadway, parking lot, or any other area, public or private. Impacted residents, businesses or other parties shall be contacted no less than 24-hours prior to excavations that will impact utilities at or access to those properties.

2a.03 Blasting

Blasting will not be allowed except by permission from the City Engineer. The Developer shall comply with all laws, ordinances, and applicable safety code requirements and regulations relative to the handling, storage, and use of explosives and protection of life and property, and it shall be fully responsible for all damage attributable to its blasting operations. Excessive blasting or overshooting will not be permitted, and any material outside the authorized cross section which may be shattered or loosened by blasting shall be removed by the Developer.

2a.04 Sheeting, Bracing And Shoring Of Excavations

Excavations shall be sheeted, braced, and shored as required to support the walls of the excavations, to eliminate sliding and settling and as may be required to protect the workmen, the work in progress, and existing utilities, structures and improvements. All such sheeting, bracing, and shoring shall comply with the requirements of the Utah Labor Commission, Occupational Safety and Health Act (OSHA), and accident prevention and safety provisions of the contract.

The Developer shall be fully responsible for the adequacy of methods and materials used in trench sheeting, bracing, shoring, and/or other systems provided to protect workmen. Injury to or death of

workmen resulting from inadequate trench safety measures shall be the full and complete responsibility of the Developer.

All damages resulting from lack of adequate sheeting, bracing, and shoring shall be the responsibility of the Developer, and the Developer shall affect all necessary repairs or reconstruction at its own expense resulting from such damage.

Sheeting or shoring that does not extend below the centerline of the pipe may be removed at the discretion and responsibility of the Developer after the trench backfill has been placed and compacted to a level 12-inches above the top of the pipe. Following removal of the sheeting or bracing, the trench shall be immediately backfilled and compacted or consolidated.

2a.05 Control Of Groundwater

All trenches shall be kept free from water during excavation, fine grading, pipe laying and jointing, and pipe embedment operations. Where the trench bottom is mucky or otherwise unstable because of the presence of groundwater, and in all cases where the static groundwater is above the bottom of any trench or bell hole excavation, such groundwater shall be lowered to the extent necessary to keep the trench free from water and the trench bottom stable when the work within the trench is in progress. The discharge from excavation dewatering shall be conducted to natural drainage channels, gutters, or storm drains, in accordance with applicable water quality regulations and requirements. No sanitary sewer shall be used for disposal of trench water. If any evidence of contamination in the water based on olfactory or visual indication, cease excavation work until potential risks are evaluated. During evaluation, handle water as a contaminated material. Surface water shall be prevented from entering trenches.

2a.06 Trench Excavation

Excavation for pipelines shall follow the line and grade shown on the approved plans. Trenches shall be excavated to the depths and widths required to accommodate construction of the pipelines, as follows:

A. Authorized Over-Excavation:

   Excavation for trenches in ledge rock, cobble rock, stones, or other material unsatisfactory for pipe foundation shall extend to a depth of at least 6-inches below the bottom of the pipe. Where unstable earth or muck is encountered in the excavation at the grade of the pipe, a minimum of 12-inches below grade will be removed. Such over-excavation and placing imported special foundation material shall not be made except as directed by the City Engineer or their designee. Over-excavations not ordered, specified, or shown shall be handled the same as unauthorized over-excavation.

B. Unauthorized Over-Excavation:

   Where any unauthorized excavation is carried below the elevation required to install the pipe to the grade shown on the plans, specified in these specifications or directed by the City Engineer, the excavation shall be backfilled in accordance with these specifications for “Imported Granular Material” and “Gravel Foundation for Pipelines and Pipeline Structures,” all at the Developer’s expense.

C. Trench Width:

   The trench shall be excavated such that the pipe is always centered in the trench. The clear trench width at the horizontal diameter of the pipe must be equal to 18-inches on either side. If a trench is excavated to a greater width, the Developer will be required to restore the trench to an

acceptable condition by following the steps outlined in these specifications for “Trenches in Embankments.”

Trench width for pipeline structures, valves, or other accessories shall be sufficient to leave at least 12-inches clear between their outer surfaces and the trench. Backfill with native soil or excavated spoils under structures, pipes or valves will not be permitted. Any unauthorized excess excavation below the elevation indicated for foundation of any structures shall be backfilled in accordance with these specifications for “Imported Granular Materials,” and “Gravel Foundation Pipelines and Pipeline Structures,” all at the Developer’s expense.

D. Trenches in Embankments:

Before laying pipes that are to be in fill or embankment areas, the embankment shall first be placed and compacted to the specified density to a depth of not less than 2-feet above the top of the proposed pipe. After placing and compacting the embankment, the trench for the pipe or conduit shall be excavated through the fill and fine graded and the pipe installed as specified.

E. Placement of Excavated Material:

All excess excavated material not fit for use in construction shall be hauled away from the construction site and disposed of in an area obtained by the Developer. The Developer shall be responsible for all rights-of-way, easements, and access associated with the disposal of excess excavated material. It shall further be responsible to obtain permission from the property owner or person(s) controlling the property where the Developer plans to dispose of excavated material.

Otherwise, excavated material shall be piled in a manner that will not endanger the work, will avoid obstructing sidewalks, driveways and streets and will comply with all applicable water quality rules and regulations. Gutters and irrigation ditches shall allow for street drainage and continuity of irrigation.

Grading of the area surrounding the trenches, including excavated materials, shall be performed as necessary to prevent surface water from flowing into trenches, or other excavations. Control of groundwater shall be as specified herein.

F. Fine Grading the Trench Bottom:

The bottom of the Trench shall be accurately graded and prepared to provide uniform bearing and support on undisturbed soil or compacted gravel foundation at every point along the entire length of the pipe. Bell holes shall be hand excavated after the trench bottom has been fine graded. Bell holes shall be only large enough to permit making the joints and to assure that the pipe is not supported by any portion of the joint or bell.

2a.07 Trench Backfill

A. Imported Granular Material:

1. General. When the excavated materials are not satisfactory for pipe foundation, pipe bedding or backfill, as determined by the Engineer, the Developer shall provide imported granular material. Imported granular material for foundation, bedding and backfill shall be cleaned, crushed rock or gravel free from sod, vegetation and other organic or deleterious material. Slag will not be allowed in the pipe zone.

2. Gradation. Imported granular material shall conform to the following gradation specifications:

    a. Gravel Foundation Material:
    100% passing a 1-inch screen and 5% passing a ½-inch screen.

    b. Gravel Bedding Material:
    Ductile Iron or concrete pipe – 100% percent passing a 1-inch screen and 5% passing a No. 4 sieve.

    c. ↑PVC or polyethylene pipe:
    100% passing a ¾-inch screen and 5% passing a No. 4 sieve.

    d. Copper tubing:
    100% passing a ¾-inch screen and 5% passing a No. 4 sieve.

    e. Gravel Backfill Material:
    100% passing a 3-inch square sieve and 15% passing a 200 mesh sieve.

B. Gravel Foundation for Pipe and Pipeline Structures:

The Gravel foundation is defined as fill material below the bottom of the pipe, pipeline structure or accessory. Wherever the trench is excavated below the subgrade for the pipe, pipeline structure, or accessory the subgrade shall be replaced with crushed rock or gravel to an elevation sufficiently above the bottom of the pipe so that the trench can be properly fine graded as specified and the pipe will be true to line and grade. The gravel material shall be deposited over the entire trench width in layers. The layers shall have a maximum un-compacted thickness of 6-inches. The gravel material is to be compacted using vibratory equipment to 96% of the maximum index density of the material as determined by ASTM D4253 (Relative Density Test).

The material shall then be fine graded in accordance with the specification for Fine Grading herein.

C. Pipe Bedding:

Pipe bedding is fill material in the pipe zone. The pipe zone is defined as the area from the bottom of the pipe to 12-inches above the top of the pipe, or any area within 12-inches of any pipe, pipeline structure or accessory.

Excavated materials consisting of loose earth, sand or gravel having no material larger than 2-inches in any dimension, no greater than 1-inch in any dimension for PVC pipe or no greater than ½-inch for copper tubing may be considered for use as pipe bedding material. The City Engineer, or their designee, shall qualify excavated material for use as bedding.

If the excavated materials are not satisfactory, imported granular material as specified herein shall be used for pipe bedding. When gravel is used around pipe bedding, the Developer must place a fabric over gravel layer to keep fines from washing into gravel, creating a void. Fabric must be at least a 200-pound tensile strength woven ground stabilization fabric (in accordance with AASHTO M 288) and shall be installed on top of gravel prior to sand or road base placement.

After the pipe is in place, bedding material shall be placed at any point below the mid-point of the pipe simultaneously and uniformly on both sides of the pipe in uncompacted layers not to exceed 10-inches or 1/2 the diameter of the pipe, whichever is less. Bedding material shall be placed with care to prevent displacement of or damage to the pipe during the bedding process,

with each10-inch lift then compacted. Material shall be scattered alongside the pipe and not dropped into the trench in compact masses.

That section of the pipe zone from the mid-point of the pipe to 12-inches above the top of the pipe shall then be filled with bedding materials and compacted to the density required in these specifications for backfill in this section of the trench.

D. Trench Backfill:

The trench shall be backfilled from 12-inches above the top of the pipe to the natural surface level or the finished grade specified on the approved drawings. Excavated materials consisting of good sound earth, sand, and gravel may be used for backfill. No oil cake, asphalt, concrete, rocky, clay or other lumpy material may be used in the backfill. Perishable or spongy material shall not be used in backfilling. The City Engineer, or their designee, shall qualify excavated material for use as backfill.

Under pavements, shoulders or other surface improvements, the in-place density shall be a minimum of 96% of laboratory standard maximum dry density as determined by AASHTO T-180 (ASTM D1557). In shoulders and other areas the in-place density shall be a minimum of 90% of the maximum dry density as determined by AASHTO T-180 (ASTM D1557). The backfill in the trenches shall be either compacted or consolidated according to the requirements of the materials being placed.

Density and compaction testing shall be done at a frequency of one test per 200-feet of trench length.

E. Compaction of Backfill:

Backfill shall be compacted by means of sheepsfoot rollers, pneumatic tire rollers, vibrating rollers, or mechanical tampers. Where compaction methods are used, the material shall be placed at a moisture content and un-compacted lift thickness such that after compaction the required relative densities will be produced. In no event will the material be placed in lifts which, prior to compaction, exceed 12-inches.

Prior to compaction each layer shall be evenly spread, moistened, and worked by disk harrowing or other equivalent means.

If the required relative density is not attained, test sections will be required to determine any adjustments in compaction equipment, thickness of layers, moisture content, and compactive effort necessary to attain the specified minimum relative density.

Approval of equipment, thickness of layers, moisture content, and compactive effort shall not be deemed to relieve the Developer of the responsibility for attaining the specified minimum relative densities. The Developer, in planning its work, shall allow sufficient time to perform the work connected with test sections and to permit the City Engineer or their designee to make tests for relative densities.

F. Consolidation of Backfill:

Consolidation of backfill, when authorized by the City Engineer, shall be accomplished by those methods in which water is used as the essential agent to produce the desired condition of density and stability. Water shall be applied by jetting unless flooding is specifically authorized by the City Engineer. Authorization by the City Engineer to use any consolidation method does not relieve the Developer of their responsibility to meet the specified density requirements. Water for consolidation shall be furnished by the Developer at their expense.

In the jetting procedure the jets shall be inserted at not more than 4-foot intervals (staggered throughout the length of the backfilled area) and shall be slowly forced down to the bottom of the trench or to of the previously jetted lift and held until the trench backfill is completely saturated with water. Depth of a jetted lift shall not exceed 5-feet.

The minimum size of hose equipment shall be such as to provide a minimum pressure of 35-psi at the discharge. The jet shall be rigid iron pipe with a minimum diameter of 1-inch.

After the water-settled trench has set for several days, any depression in the trench shall be filled, mounded over and wheel rolled to compact the material thus placed.

All precautions necessary shall be taken by the Developer to prevent damage and movement (including floating) of the pipeline, structures, and existing adjacent improvements and utilities. The allowance of the use of consolidation methods shall not be construed as guaranteeing or implying that the use of such methods will not result in damage to the adjacent ground. The Developer shall make their own determination in this regard and shall assume all risks and liability for settlement or lateral movement of adjacent ground, or improvements, or utilities, either on the surface of the ground or underground.

2a.08 Trench Crossings And Easement

At road crossings or where existing driveways occur on a road, the Developer shall make provisions for trench crossings either by means of backfills, tunnels, or temporary bridges.

When excavating within easements, the Developer shall carefully remove all shrubs, fences, and other above ground items, carefully cut and remove any lawn sod and remove the topsoil for a depth of at least 12-inches (or the depth of the actual topsoil if less than 12-inches with the width of the lawn sod and/or topsoil removal being at least 2-feet wider (1-foot each side) than the excavated trench width and excavated material pile). The lawn sod and topsoil material shall be piled separately from and shall not be mixed with the remainder of the excavated material.

When working in already developed areas on private property the City Engineer may require that following completion of the backfilling and the compaction of the trench, the Developer shall replace topsoil, lawn sod, shrubs, fences, and other items that may have been removed from within the easement area and clean up and remove any rocks, dirt or any other debris that remain from the construction work. When required, the Developer shall obtain a release from the property owner stating that the repairs have been made to the satisfaction of the Owner. A copy of said release shall be delivered to the City Engineer.

2a.09 Restoration Of Construction Site

During the progress of the work, the Developer shall clean up all construction debris, excess excavation and construction materials, and shall restore all fences, irrigation structures, ditches, culverts, and similar items. The Developer shall stockpile the excavated trench material so as to do the least damage to adjacent grassed areas, or fences, regardless of whether these are on private property or public rights of way. All excavated materials shall be removed from grassed and planted areas and these surfaces shall be left in a condition equivalent to their original surface and free from all rocks, gravel, boulders, or other foreign materials.

2a.10 Developer's Responsibility

The Developer will be responsible to see that the backfilling, consolidation and compaction are properly and adequately done. Settlement of trenches within a period of 1-year after final acceptance of the project, shall be considered incontrovertible evidence of inadequate compaction, and the Developer

shall be responsible for correcting the condition in accordance with the provisions of these Specifications, including the replacement of the surface materials. The Developer is responsible to maintain and repair any problems caused by them to adjoining properties.

2a.11 Kaysville City Power And Light Underground Conduit Requirements

The Developer is responsible for installing conduit for road crossings. The properties should be marked and radius for corners marked and staked. A representative from Kaysville City Power and Light (Power) will mark crossing for the Developer. The Developer is required to dig a trench 4-feet deep and stub 8-feet from the back of curb for future tie-in of conduit. The Developer will seal both ends of conduit crossing with conduit seal.

Prior to the digging of the trench for the conduit system, the Developer will have curb and gutter in with property marks on curb and property stakes in back of properties. The Developer shall excavate a serviceable trench 4-feet deep and 13-feet from the center of trench to the back of curb, exposing the road crossing conduit for Power (offsets may vary depending on type of subdivision). A serviceable trench is one that is level, does not have sidewalls that are collapsing, and does not having ponding water. A representative from Power shall determine if a trench is serviceable or not, and shall require issues to be remedied before being accepted as serviceable.

Once the trench is deemed serviceable, Power will install the conduit, according to their availability. Power shall be the only utility allowed in this trench, and will be notified prior to any changes or if problems arise, and will be responsible to approve any changes prior to them being incorporated and/or made.

Backfilled trenches should have the center of the conduit, or conduit bundles, located 13-feet behind the curb. Material used for backfill of the trench must not pose a risk of damaging the conduit during placement, compaction or loading. If backfill material is not suitable, as determined by Power, sand may be required to “shade” the conduit to help protect it from damage before backfilling the trench. Any broken, damaged or defective conduit shall be excavated by the Developer and repaired by Power. Once any necessary repairs are made, the Developer will be responsible to then backfill and make any other necessary repairs to complete the work.

DIVISION 4a PVC PRESSURE PIPE
4a.01 General
4a.02 Materials
4a.03 Joints
4a.04 Fittings
4a.05 Polyethylene Wrapping
4a.06 Pipe Installation
4a.07 Flushing And Testing

4a.01 General

This Division covers furnishing and installing PVC pressure pipe (as part of the City drinking water distribution system) to the lines and grades shown on the approved drawings and/or established in the field, and all flushing, testing, and repairing required to ensure adequate and safe operation of the water system. Minimum pipe size for culinary water main line is 8-inch diameter, and 6-inch diameter for fire lines, unless otherwise shown and approved by City Engineer. For information regarding furnishing and installing irrigation PVC pressure pipe, please see the standard drawings and specifications of Haights Creek Irrigation, Davis and Weber Canal Company or Benchland Water, depending on the location.

4a.02 Materials

Pipe for the transmission and distribution of water shall be manufactured in accordance with ANSI/AWWA C900, "AWWA Standard for Polyvinyl Chloride (PVC) Pressure Pipe, 4-inch through 12-inch, for Water". The PVC pipe shall have a cast-iron-pipe-equivalent outside diameter. PVC pipe 14-inches and larger shall be manufactured in accordance with ANSI/AWWA C905, "AWWA Standard for Polyvinyl Chloride (PVC) Water Transmission Pipe, Nominal Diameters 14-inch through 36-inch." All PVC pipe 4-inch and larger shall be SDR 18 with a working pressure of 150-psi. Pipe smaller than 4-inch shall be Schedule 40 PVC. Culinary water pipe must be blue in color and secondary water pipe must be purple.

4a.03 Joints

Joints shall be push on rubber gasket type. Lubrication shall be water soluble, non-toxic, non-objectionable in taste and odor imparted to the water, non-supporting of bacteria growth, and have no deteriorating effect on the PVC pipe or rubber gaskets. It shall conform in every way to the National Sanitation Foundation NSF/ANSI Standard 61.

4a.04 Fittings

All fittings to be used with the PVC pipe shall be the same as fittings for Ductile Iron Pipe and shall conform to the provisions of ANSI/AWWA C110/A21.10 or C153/A21.53. Mechanical joints should be restrained. Megalug by EBAA Iron is the preferred mechanical joint restraint.

4a.05 Polyethylene Wrapping

All fittings for PVC pipe shall be wrapped as specified herein. All materials placed shall be wrapped with a polyethylene plastic wrap, including all fittings and valves, in accordance with the manufacturer's specifications.

All compression couplings, mechanical joints, flanged joints, and valves exposed to soil shall be wrapped with 8-mil thick polyethylene film adhesive tape equal to Polyken No. 900 or Scotchrap No. 50. The tape shall be installed to adhere securely to both the pipe and polyethylene. Enough film shall be used to overlap the adjoining pipe a minimum of 1 foot.

Valves shall be wrapped by bringing the wrap on the adjacent pipe over the bells of flanges of the valve and sealing with the adhesive tape. The valve bodies are then wrapped with a flat sheet of the film passed under the valve bottom and brought up around the body to the stem and fastened in place with the adhesive tape.

All fittings that require concrete blocking should be completely wrapped prior to pouring the concrete backing block.

Polyethylene wrap shall be protected from the sun and weathering prior to use. Care shall be exercised during backfilling of the protected areas to prevent puncturing the film.

4a.06 Pipe Installation

A. Cutting:

Cutting of pipe for closure pieces or for other reasons shall be done in a neat and workmanlike manner by a method recommended by the manufacturer. After cutting, the pipe shall be beveled and filed to prevent gasket damage in joint assembly.

B. Dewatering of Trench:

Where water is encountered in the trench, it shall be removed during pipe laying operations and the trench so maintained until the ends of the pipe are sealed. See "Control of Groundwater" in Division 2 Trench - Excavation and Backfill.

C. Laying of Pipe:

The pipe and pipe coating (where applicable) shall be inspected for defects before installation. Any defects shall be repaired or the pipe shall be replaced, whichever is deemed necessary by the City Engineer or Representative.

All pipes shall be laid and maintained to the required lines and grades with fittings and valves at the required locations. The pipes shall be installed with 48 inches to the top of the pipe minimum cover from finished road surface for culinary water. The Developer shall be responsible to install the pipe line to the alignment set by the City Engineer or Representative or as shown on the Drawings.

All pipes, fittings and valves shall be carefully lowered from the truck when unloading or when installing into the trench. This should be done one piece at a time in order to prevent damage to pipe materials and protective coatings and linings. Under no circumstances shall materials be dropped or dumped from the truck or into the trench.

The Developer shall take the necessary precautions such that foreign materials do not enter into the pipe. No debris, tools, or other materials shall be placed in the pipe during laying operations. When laying of pipe is not in progress, the pipe shall be closed by a water-tight plug.

Deflections in PVC pipe shall be made by longitudinal bending of the pipe barrel of the pipe rather than deflecting the pipe joints. Longitudinal bending shall be limited to eighty percent (80%) of that allowed by the manufacturer. This is accomplished by dividing the minimum recommended bending radius by 0.8.

All non-conductive drinking water pipes require a tracer wire (12 gauge) for locating purposes placed on top of the pipe and connected to the nearest fire hydrant, unless otherwise directed.

Where splices are to be made, a water tight splice kit must be used. The wire should be run from the mainline, to the nearest fire hydrant, and connected to an above ground access station (a blue Snakepit RB14-TP, or approved equal). See standard drawings for additional detail.

D. Pipe Bedding:

All pipes shall be protected from lateral displacement and possible damage resulting from impact or unbalanced loading during backfilling operations by being adequately bedded.

In the event trench materials are not, in the judgment of the City Engineer or Representative, satisfactory for pipe bedding, imported granular bedding will be required. See Division 2a of these specifications.

E. Thrust Blocking:

Thrust blocking shall be applied at all tees, valves, plugs, caps and at bends deflecting 11 1/4 degrees or more. The fitting shall be encased in a 12 mil protective plastic wrap before the thrust block is poured. Reaction blocking shall be concrete, having a compressive strength of not less than 3000 pounds per square inch at 28 days. Blocking shall be placed between undisturbed soil and the fitting to be anchored. The area of bearing on the pipe and on the ground shall be as shown in the Drawings. Restraint sizing is based upon a maximum operating pressure of 150 psi and a test pressure of 200 psi, and a minimum soil bearing stress of 2,000 psf.

The blocking shall be so placed that the pipe and the fittings will be accessible for repair. Prior to backfilling around thrust block, secure inspection of installation by City Engineer or Representative. Concrete must be allowed to cure in thrust restraints for 5 days prior to pressurizing water lines or have additional approved thrust restraints installed prior to pressurizing the water line.

F. Connections to Existing Water Lines:

Information on the drawings regarding existing water lines is taken from "record" drawings from the city or utility company files and may or may not be accurate as to size, type of material or location. The Developer will be responsible to determine the proper fittings and materials required, obtain the City Engineer's approval of the planned connection, and perform the construction in a suitable fashion.

G. Magnetic Locator Tape:

All pipe shall include a three inch (3”) magnetic locator tape installed in the pipeline trench approximately twenty four inches (24”) above the top of pipe. This tape shall be prepared for culinary water with white or black printing on a blue field having the words: POTABLE WATER.

This tape shall be prepared for secondary water with white or black printing on a purple field, color Panatone 512C, having the words: CAUTION: NONPOTABLE WATER - DO NOT DRINK.

4a.07 Flushing And Testing

A. Pressure Test:

A leakage test shall be conducted concurrently with the pressure test. After the pipe has been laid, all newly laid pipe or any valved section thereof shall be subjected to a hydrostatic pressure of at least 1.5 times the working pressure at the point of testing.

1. Test Pressure Restrictions:

   Test pressures shall:

   a. Not be less than 1.25 times working pressure at the highest point along the test section or a minimum of 200 psi.

   b. Not exceed pipe or thrust restraint design pressures.

   c. Be of at least 2-hour duration.

   d. Not vary by more than plus or minus five (± 5) psi for the duration of the test.

   e. Not exceed twice the rated pressure of the valves or hydrants when the pressure boundary of the test section includes closed gate valves or hydrants.

   f. Not exceed the rated pressure of the valves when the test boundary of the test section includes closed, resilient-seated gate valves or butterfly valves.

2. Pressurization:

   Each valved section of pipe shall be slowly filled with water and the specified test pressure, based on the elevation of the lowest point of the line or section under test and corrected to the elevation of the test gage, shall be applied by means of a pump connected to the pipe in a manner satisfactory to the City Engineer.

3. Air Removal:

   Before applying the specified test pressure, air shall be expelled completely from the pipe, valves, and hydrants. If permanent air vents are not located at all high points, the Developer shall install corporation cocks at such points so that the air can be expelled as the line is filled with water. After all the air has been expelled, the corporation cocks shall be closed and the test pressure applied. At the conclusion of the pressure test, the corporation cocks shall be removed and plugged.

4. Examination:

   All exposed pipe, fittings, valves, hydrants, and joints shall be examined carefully during the test. Any damaged or defective pipe, fittings, valves, or hydrants that are discovered following the pressure test shall be repaired or replaced with sound materials and the test shall be repeated until it is satisfactory to the Owner.

B. Leakage Test:

A leakage test shall be conducted concurrently with the pressure test.

1. Leakage Defined:

   Leakage shall be defined as the quantity of water that must be supplied into the newly laid pipe, or any valved section thereof, to maintain pressure within 5 psi of the specified test pressure after the air in the pipeline has been expelled and the pipe has been filled with water.

2. Allowable Leakage:

   No pipe installation will be accepted if the leakage is greater than that determined by the following formula:

$$L = \frac{SD(P)^{0.5}}{133,200}$$

in which L is the allowable leakage, in gallons per hour; S is the length of pipeline tested in feet; D is the nominal diameter of the pipe, in inches; and P is the average test pressure during the leakage test, in pounds per square inch gage.

a. Allowable leakage at various pressures is shown in Table 1.

b. When testing against closed metal-seated valves, an additional leakage per closed valve of 0.0078 gal/hr/in. of nominal valve size shall be allowed.

c. When hydrants are in the test section, the test shall be made against the closed hydrant.

TABLE 1
Allowable Leakage per 1000 ft of Pipeline - gph

Average Test Pressure psi (Bar)	Nominal Pipe Diameter—in.															
	3	4	6	8	10	12	14	16	18	20	24	30	36	42	48	54
450 (31)	0.48	0.64	0.95	1.27	1.59	1.91	2.23	2.55	2.87	3.18	3.82	4.78	5.73	6.69	7.64	8.60
400 (28)	0.45	0.60	0.90	1.20	1.50	1.80	2.10	2.40	2.70	3.00	3.60	4.50	5.41	6.31	7.21	8.11
350 (24)	0.42	0.56	0.84	1.12	1.40	1.69	1.98	2.25	2.53	2.81	3.37	4.21	5.06	5.90	6.74	7.58
300 (21)	0.39	0.52	0.78	1.04	1.30	1.56	1.82	2.08	2.34	2.60	3.12	3.90	4.68	5.46	6.24	7.02
275 (19)	0.37	0.50	0.75	1.00	1.24	1.49	1.74	1.99	2.24	2.49	2.99	3.73	4.48	5.23	5.98	6.72
250 (17)	0.36	0.47	0.71	0.95	1.19	1.42	1.66	1.90	2.14	2.37	2.85	3.56	4.27	4.99	5.70	6.41
225 (16)	0.34	0.45	0.68	0.90	1.13	1.35	1.58	1.80	2.03	2.25	2.70	3.38	4.05	4,73	5.41	6.03
200 (14)	0.32	0.43	0.64	0.85	1.06	1.28	1.48	1.70	1.91	2.12	2.55	3.19	3.82	4.46	5.09	5.73
175 (12)	0.30	0.40	0.59	0.80	0.99	1.19	1.39	1.59	1.79	1.98	2.38	2.98	3.58	4.17	4.77	5.36
150 (10)	0.28	0.37	0.55	0.74	0.92	1.10	1.29	1.47	1.66	1.84	2.21	2.76	3.31	3.86	4.41	4.97
125 (9)	0.25	0.34	0.50	0.67	0.84	1.01	1.18	1.34	1.51	1.68	2.01	2.52	3.02	3.53	4.03	4.53
100 (7)	0.23	0.30	0.45	0.60	0.75	0.90	1.05	1.20	1.35	1.50	1.80	2.25	2.70	3.15	3.60	4.05

*If the pipeline under test contains sections of various diameters, the allowable leakage will be the sum of the computed leakage for each size.
**To obtain leakage in liters/hour, multiply the values in the table by 3.785.

3. Acceptance of Installation:

Acceptance shall be determined on the basis of allowable leakage. If any test of pipe laid discloses leakage greater than specified, the Developer shall, at its own expense, locate and repair the defective material until the leakage is within the specified allowance. All visible leaks are to be repaired regardless of the amount of leakage.

C. Flushing:

All new water systems or extensions to existing systems shall be thoroughly flushed before being placed in service. Flushing shall be accomplished through hydrants, or end of line blow-off assemblies at a minimum flushing velocity of 2.5-feet per second.

FLOW RATE AND OPENINGS TO FLUSH PIPELINES (40-psi Residual Pressure)	
Pipe Size (inches)	Flow Required to Produce 2.5 fps velocity (gpm)
2	26
4	100
6	220
8	390
10	610
12	880
14	1,200
16	1,565
18	1,980
20	2,450
24	3,525
30	5,507

D. Disinfection:

After flushing, all culinary water lines shall be disinfected by chlorination. Chlorination shall provide a minimum of 25-ppm residual after 24-hours contact in the pipeline. This may be expected with an application of 50-ppm, although some conditions may require more. Chlorine in the form of a 1% slurry of high-test calcium hypochlorite (T-Chlor, HTH, Perchloron, Pittchlor, etc. which are 70% available chlorine by weight) shall be fed into the pipeline in such a manner as to mix with the water flowing in the pipeline. (A 1% slurry – 10,000 ppm – results from mixing one pound of calcium hypochlorite with 8.40 gallons of water.)

The following table provides information as to the required quantity of slurry to be used per 100 feet of pipe to provide a chlorine concentration of 50 ppm:

Pipe Size (in.)	Vol. of 100 ft. Length (gal)	Required Amount of 1% Chlorine Slurry (gal)
1 1/2	9.18	0.07
2	16.32	0.12
2 1/2	25.50	0.18
3	36.73	0.26
4	65.28	0.47
6	146.90	1.05
8	261.10	1.87
10	408.10	2.92
12	587.60	4.20

During the process of chlorinating the pipeline, all valves and other pipeline appurtenances shall be operated several times to provide sufficient contact with the chlorinating agent. Following chlorination, the water line shall be drained and thoroughly flushed according to Section A above and, if necessary, rechlorinated until a satisfactory bacteriological test is obtained. After passing a bacterialogical test, water must be flushed from the pipe and discharged in accordance with all local, state and federal water quality requirements.

Disinfection shall conform to the requirements of AWWA C651 (or latest edition). Main lines must pass bacterialogical test. Number of samples to be determined by inspector and will be based on the size of the development. If a new main is connected to an existing main, a bacteria test must be completed and passed prior to any pressure testing being conducted.

DIVISION 4d WATER SERVICE LATERALS

4d.01 General
4d.02 Water Service Laterals

4d.01 General

Water service laterals shall be constructed with materials specified and at the locations shown on the Drawings or at the actual location established during construction by the City Engineer or representative. The City shall maintain the service lateral from the main line to the end of the meter setter; the service lateral between the end of the meter setter and the property is to be maintained by the property owner.

4d.02 Water Service Laterals

Pipe for water service laterals shall be 3/4-inch Type K-soft copper tubing or blue HDPE SDR 9 Copper Tube Size (CTS) with a 200-psi rating.

A. Extent of Laterals:

Water service laterals shall extend from the water main to a point 10-feet beyond the street right-of-way line. A curb stop valve shall be installed on the end of the line. Type K-soft copper tubing water services shall not have any joints between the corporation stop and the meter setter. A 2-inch by 4-inch by 6-foot marker, with the top 12-inches painted blue, shall be installed to clearly mark the end of each lateral line. Tracer wire (12 gauge) shall be installed from the main to the end of each lateral line, and come up the outside of each meter box, and come into the meter box in a notch between the meter ring and the box. Meter boxes shall be installed in accordance with the Kaysville City standard drawings.

B. Excavation and Backfill:

Trench excavation and backfill shall conform to the applicable paragraphs of Division 2a. Bedding shall meet the requirement of Division 2a for PVC or polyethylene pipe.

C. Connection to Main:

Connections to the main lines shall be made by means of corporation stops using direct pipe taps for 3/4-inch and 1-inch services on Ductile Iron pipe, tapped tees for 2-inch service or approved service saddles for PVC and any of the above. HDPE fused saddles should be Frialen 10-inch to 20-inch universal service saddle with 2-inch female threaded outlet or equivalent.

D. Service Saddle Specifications:

(For use with AWWA C-900 CI O.D. for PVC plastic pipe.)

All service clamps shall be a “Full encirclement design”, and shall be O.D. controlled, which design will eliminate the possibility of pipe crushing due to the over torquing of the nuts upon installation.

All service clamps shall be manufactured of brass cast in conformance to AWWA C800, General Section – 1, Paragraph 1.2 (ASTM B62).

The two sides of the clamp shall be held together by high quality Silicon Bronze Hex Bolts (in sizes 1-inch and over) or Silicon Bronze Slotted Screws (in sizes under 1-inch), no dissimilar metals shall be allowed at this point thus eliminating the possibility of galvanic corrosion.

All service clamps shall be Mueller Model H-13490 Series, or Ford Model S-91 Series for sizes through 12-inch and Romac 305 Series for 14-inch or larger.

(For use with Ductile Iron Pipe.)

All service clamps shall be of the double strap design with brass body, flattened silicon bronze straps, rolled strap threads and O-ring sealed outlet. Saddles shall meet all applicable parts of ANSI/AWWA C-800.

All service clamps shall be Mueller Model H-16000 Series or approved equal.

Sample Stations:

The City may require an above ground sample station for water quality testing (Eclipse 88 type or approved equal). When required, sample stations shall be installed at a depth of 3 to 4-feet, and in accordance with the Kaysville City standard drawings. Sample station locations shall be determined by the City Engineer.

The line from the main to the sample station shall be subject to the same requirements as a service lateral.

E. Corporation Stops:

Connections of services to main lines shall be through a corporation type stop and a 24-inch gooseneck formed with copper tube. Inlet connection shall be a AWWA I.P. thread and the outlet shall be a compression fitting. Ford or Mueller are the approved manufacturers.

All connection made to pressurized water lines shall be done using a “wet-tap” method.

F. Service Tubing:

Water service lines from the main to the meter box shall be 3/4-inch, 1-inch, or 2-inch type K-soft copper tube or blue HDPE SDR 9 Copper Tube Size (CTS) with a 200-psi rating.

When transferring or replacing existing galvanized steel or plastic services, copper replacement tubing or blue HDPE shall be used, as detailed above.

All tubing for service lines shall be cut and installed in a neat and workmanlike manner by use of a wheel cutter.

G. Compression Connections:

1. The interior surface of the coupling nut, including threads, shall have a baked on, fluorocarbon coating to reduce assembly friction and prevent the gasket from turning and twisting during tightening. The nut shall bottom on a cast or machined shoulder on the body when properly assembled. This design will provide a visual check to assure connection is properly assembled.
2. The sealing gasket shall be of molded synthetic rubber (ASTM D-2000) with molded in place bronze spring (ASTM A-134 Alloy #6) to eliminate the possible cold flow of the gasket between the pipe and fitting.
3. A gripper band of hardened Stainless Steel (ANSI Type 401) shall be fitted into the gasket. When the gasket is compressed it will cause the gripper ring to distort the pipe giving the fitting a high resistance to pull out. The gripper band shall overlap itself to prevent cold flow of the gasket into the cavity under the band.

4. Compression connections and fittings shall be Mueller 110 or equal.

H. Flushing, Testing, and Disinfection:

Flushing, testing and disinfection shall be done at the time the water main is flushed, tested and disinfected. The end of the trench where the curb valve is located shall be left open to allow for discharging water out of the service line for proper flushing and to insure that the line has been adequately disinfected. Flushing, testing and disinfection shall conform to the applicable paragraphs of Division 4a or 4b.

I. Damage and Repair of Water Mains and Appurtenances:

The Developer shall be responsible for any damage to water mains and water facilities caused by their operations.

Any damage to water gates, hydrants, valve chambers, and other surface appurtenances which result from the Developer's operation shall be their sole responsibility.